AUTHENTICATED
U.S. GOVERNMENT
INFORMATION
GPO

S. HRG. 108–858

FISCAL YEAR 2005 FIELD HEARING

HEARINGS

BEFORE THE

COMMITTEE ON THE BUDGET
UNITED STATES SENATE

ONE HUNDRED EIGHTH CONGRESS

SECOND SESSION

January 9, 2004—MAD COW DISEASE: INDUSTRY IMPACT AND U.S. GOVERNMENT RESPONSE

Printed for the use of the Committee on the Budget

FISCAL YEAR 2005 FIELD HEARING

S. HRG. 108–858

FISCAL YEAR 2005 FIELD HEARING

HEARINGS

BEFORE THE

COMMITTEE ON THE BUDGET
UNITED STATES SENATE

ONE HUNDRED EIGHTH CONGRESS

SECOND SESSION

January 9, 2004—MAD COW DISEASE: INDUSTRY IMPACT AND U.S. GOVERNMENT RESPONSE

Printed for the use of the Committee on the Budget

U.S. GOVERNMENT PRINTING OFFICE

22–427cc WASHINGTON : 2004

For sale by the Superintendent of Documents, U.S. Government Printing Office
Internet: bookstore.gpo.gov Phone: toll free (866) 512–1800; DC area (202) 512–1800
Fax: (202) 512–2250 Mail: Stop SSOP, Washington, DC 20402–0001

COMMITTEE ON THE BUDGET

DON NICKLES, Oklahoma, *Chairman*

PETE V. DOMENICI, New Mexico
CHARLES GRASSLEY, Iowa
JUDD GREGG, New Hampshire
WAYNE ALLARD, Colorado
CONRAD BURNS, Montana
MICHAEL ENZI, Wyoming
JEFF SESSIONS, Alabama
JIM BUNNING, Kentucky
MIKE CRAPO, Idaho
JOHN ENSIGN, Neveda
JOHN CORNYN, Texas

KENT CONRAD, North Dakota
ERNEST F. HOLLINGS, South Carolina
PAUL S. SARBANES, Maryland
PATTY MURRAY, Washington
RON WYDEN, Oregon
RUSSELL D. FEINGOLD, Wisconsin
TIM JOHNSON, South Dakota
ROBERT C. BYRD, West Virginia
BILL NELSON, Florida
DEBBIE STABENOW, Michigan
JON S. CORZINE, New Jersey

HAZEN MARSHALL, *Majority Staff Director*
MARY ANN NAYLOR, *Staff Director*

CONTENTS

HEARINGS

	Page
January 9, 2004—MAD COW DISEASE: INDUSTRY IMPACT AND U.S. GOVERNMENT RESPONSE	1

STATEMENTS BY COMMITTEE MEMBERS

Senator Conrad	1

WITNESSES

Aasmundstad, Eric, President, North Dakota Farm Bureau	4
Carlson, Robert, President, North Dakota Farmers Union, Bismarck, North Dakota	5
Dahl, Jeff, President, North Dakota Stockmen's Association, Bismarck, North Dakota	13
Duppong, Terry, Duppong's Willow Creek Farms, Glen Ullin, North Dakota; On Behalf of the Ranchers-Cattlement Action Legal Fund, United Stockgrowers of America (R-CALF USA)	22
Galbreath, Craig, Dr., Oakes Feed, Oakes, North Dakota	28
Schuler, Larry, DVM, State Veterinarian, North Dakota Department of Agriculture, State Board of Animal Health, Bismarck, North Dakota	15

MAD COW DISEASE: INDUSTRY IMPACT AND U.S. GOVERNMENT RESPONSE

FRIDAY, JANUARY 9, 2004

U.S. SENATE,
COMMITTEE ON THE BUDGET,
Washington, DC.

The committee met, pursuant to notice, at 10 a.m. in the Pioneer Room, North Dakota State Capitol, Bismarck, North Dakota, Hon. Kent Conrad presiding.

Present: Senator Conrad.

OPENING STATEMENT OF SENATOR KENT CONRAD

Senator CONRAD. The hearing will come to order. I am asking people to take their seats so that we can begin the hearing.

Let me indicate that this is an official hearing of the Senate Budget Committee, and so the rules of the U.S. Senate will be followed in this hearing. That means that we give the witnesses our full attention. We ask that there be no open expressions of agreement or disagreement with statements made by the witnesses, that they be allowed to make their full and complete statement without interruption.

We will then have a time for questions of the first panel. We will then excuse the first panel and we will go to the second panel. We will allow each of them to testify, have a question and answer period, and then if there is time permitting, it is my hope that we would be able to open it up for people in the audience to make any additional statements or comments, or ask questions that they might have.

The other point I should make is that if people have written testimony, if they would provide a copy of that to the court reporter. She advises me that that would be of assistance to her. So if any of the witnesses have prepared statements, if they would make a copy available to the court reporter, I am confident that that would help her.

One other thing I would like to indicate to you today is that C-Span advised my office this morning that this is the first congressional hearing on this issue, and as a result, substantial national interest will be focused on what we learn here today, so this is an important hearing. It is an important hearing for North Dakota. It is an important hearing for the industry. It is an important hearing for the country.

As you know, some 40 countries have now banned our exports of beef. That is a very serious matter, and something that we must move to correct as quickly as possible. That is one of the focuses

of this hearing, how we can proceed to recapture these lost markets.

Let me indicate that the Committee on the Budget meets this morning to assess the impact of the recent case of mad cow disease, and the Federal Government's response to that incident.

It was just over 2 weeks ago that the United States cattle industry was rocked by the news that a single dairy cow in Washington state had been found with mad cow disease, otherwise known as bovine spongiform encephalopathy, or BSE. The revelation hit our ranchers and feeders like a gut punch, made worse by the fact that consumers were just settling in for the holidays, and cattle producers, themselves, were just starting to enjoy a long-overdue period of profitability. The ensuing drop in cattle prices and the subsequent loss of beef exports to nearly 40 countries were a shock to our cattlemen and to our nation.

Fortunately, the situation has now somewhat stabilized. The immediate free-fall in cattle prices has eased, and by all accounts domestic consumer demand for beef remains at a very strong level. In this past week, USDA officials confirmed that the diseased cow had its origin in Canada, thus the United States can continue to assert and assert clearly and legitimately that we have not yet had a homegrown case of mad cow disease, and we can emphatically reassure our consumers, both at home and abroad, that U.S. beef remains healthy and safe. That should be the very clear message coming from this hearing—U.S. beef supplies are healthy and safe. They are healthy and safe for our consumers in this country, they are healthy and safe for our export customers.

Also on the positive side, the crisis has served to educate the public on the great importance of the beef industry, not just to rural America, but to our entire economy. Beef is, indeed, critical to creating jobs and generating income across our entire nation.

This bit of good news is welcome, but the reality remains that we have a lot to do to protect this industry and put it back on a solid footing. For example, our nearly $3.5 billion export market is still at considerable risk, and we are not likely to get cattle prices back up to their pre-crisis levels until we once again open those export markets. I do know that the market was limit up the last 2 days—that is very encouraging.

In addition, many questions remain as to the specifics of the mad cow measures that USDA has announced, including their impact on both producers and consumers.

The mad cow case was a harsh reminder that consumer confidence is a very fragile asset—one that we can not take for granted and one that we must continually work to preserve. We can't just react to events as Europe and Canada did after their mad cow outbreaks, or we will lose the consumer and see our industry devastated. Europe eventually destroyed nearly 4 million head. Let me repeat that, because that ought to be the warning to all of us as to the significance of the threat. In Europe they destroyed nearly 4 million head in response to their outbreak, most of them in the United Kingdom. We have to be ever-vigilant, anticipate events, and make sure that we have the proper preventative measures in place to protect this industry and our consumers.

As we know, on December 30th, the USDA announced several mad cow safeguard measures designed to maintain consumer confidence. Those steps are summarized in this chart.

[The information referred to follows:]

Senator CONRAD. Let me just direct your attention to those steps that have already been announced:

National Livestock Identification System: Immediate implementation.

Downer Animals: Immediate ban.

Product Holding: Confirmation must be received before tested cattle are marked "Inspected and Passed," and the confirmation, of course, is of the test results that have been done.

Specified Risk Material: Immediate, more comprehensive ban.

Advanced Meat Recovery: Additional restrictions, strengthen process control.

Mechanically Separated Meat: An immediate ban.

Air-Injected Stunning: An immediate ban.

These are aggressive steps that were needed to protect consumer confidence.

A case in point is the proposed immediate implementation of a national livestock identification system. Back on October 30th, well before the mad cow case surfaced, I wrote a letter, signed by four of my colleagues, to the Chairman of the Senate Agriculture Committee, Senator Cochran, asking for a hearing on USDA's then-fledgling plans to develop a livestock identification system. I wanted to know then the expected costs and benefits of such a system, whether it would be made mandatory, whether it would be required of imports, how it would relate to the new country-of-origin labeling requirement, and so on.

Now events have conspired to force the immediate implementation of a national identification system. Presumably, such a system will be made mandatory and applied to imported livestock and meat, as well. But these basic decisions remain unanswered. Neither do we know whether the new ID system will be fully funded. This is critical, and it's a central focus of this hearing.

The President is scheduled to release his new budget for the coming fiscal year on February 2nd, and I will be examining that budget very closely to see that it includes full funding for the new national identification system and related mad cow prevention measures. My concern is that if these measures are not funded by the Federal budget, that the full costs will be pushed onto producers. That would not been, in my judgment, a fair result.

I would especially welcome any specific comments from our witnesses today on these points.

Other fundamental questions remain, including the future terms of our livestock and meat trade with Canada. I have already called on USDA to postpone indefinitely any plans to reopen the border to Canadian live cattle, and I am calling on them today to reexamine the earlier decision to allow Canadian meat imports, especially in the wake of our new mad cow safeguard measures, which Canada has adopted only in part. These are critically important points:

No. 1, the border should remain closed to Canadian live animals.

No. 2, USDA ought to review their earlier decision to allow Canadian boxed beef into this country, because Canada has not yet

adopted the full measures that we have to protect consumers in our industry.

Our subject this morning is a serious one. We have a lot of work ahead over the next several months. We also have a lot at stake. Our ranchers are vital to North Dakota and to our country, and their future livelihood depends on our ability to continually reassure consumers that U.S. beef remains safe.

I want to thank all of our witnesses for agreeing on very short notice to appear here today. I ask each witness to please try to summarize your remarks in 10 minutes, or approximately that, so we can maximize the time available for questions and discussion. A copy of your entire prepared statement will be made part of the record.

In order to accommodate the schedule of our witnesses, we have grouped their presentations into two panels. We will now begin with the first panel, and I will turn to Eric Aasmundstad, who is the head of North Dakota Farm Bureau. I very much appreciate your being here today. Please proceed with your testimony.

STATEMENT OF ERIC AASMUNDSTAD, PRESIDENT, NORTH DAKOTA FARM BUREAU

Mr. AASMUNDSTAD. Chairman Conrad. I thank you for it opportunity to be here this morning to represent more 26,000 member families that are North Dakota Farm Bureau.

North Dakota Farm Bureau is very concerned that the USDA-APHIS proposed rules to allow the importation of Canadian cattle in the United States are not stringent enough to prevent another BSE incident in our country. We believe that all importation of cattle from Canada should be suspended until the current investigation regarding the Washington state animal is completed, and then only if those findings say that—and the science says it is OK.

The OIE recommends that the ban on the feeding of ruminant protein to ruminants should be in place for 7 years to classify a country or region as minimal-risk area for BSE. This recommendation is recognized by the WTO as an international recommendation for animal disease control. And Canada has not had a ban in place for that length of time. A case of BSE verified in Canada less than a year ago and the animal found now in the United States with BSE originated in Canada, and we submit Canada is not a minimal-risk country, and therefore, cattle imports should be banned from the United States from Canada.

There are rumors circulating that a feed mill in Alberta has been including animal protein in ruminant feeds as recently as the past year. Now, we haven't been able substantiate that, and we certainly hope that it is not true, but until this can be disproved or substantiated, we have to error on the side of caution so that our livestock, our cattle producers don't have to suffer the same damages that the Canadian producers have.

You know, Canada has made the efforts to minimize the risk of BSE. I think they have probably fallen short, but they have done, in part, quite an exemplary job of finding and isolating and preventing the spread of this disease in their country, but we have to ask ourselves, have they done enough so that we dare go there, so we dare import anything from Canada? We don't think they have.

And we think that the case of this cow showing up in Washington was an exclamation point behind that.

The devastation the U.S. livestock market has experienced because of this discovery, cannot, must not be ignored. U.S. producers are not willing to risk further harm by allowing imports of Canadian cattle.

We support the animal identification from the standpoint of food safety, being able to quickly trace where and when an animal may have contracted disease, and being able to identify suspect animals quickly will provide a safer, healthier food supply.

Implementation of an animal identification program must have producer safeguards to be readily acceptable. The program cannot simply be a mechanism to pass all liability back to the producer. Once the original owner sells or relinquishes control of the animal, the owner's liability must also be removed. The identification program must not force the costs of implementation, administration and/or regulation entire upon the producer. The expense of identification devices, whatever they may be, cannot be totally borne by the producer, either. Consumers, as well as producers, benefit from this program, and both should share in the cost.

The authors of the proposed animal identification plan left a small window of opportunity for other types of identification. They mentioned tattoos, but provided no details. We believe tatoos, various types of brands, and etcetera, could be used by the original owner to identify the animal. Until more is known, we reserve further comments, however, we are generally supportive of the concept, if carried out properly.

We support COOL. This may not be a food safety issue in and of itself, but if an infectious outbreak occurs, we will be able to more readily identify where that product originated. COOL is a consumer issue, and as such, will provide broader consumer confidence, especially in conjunction with measures being taken to assure food health and safety. Once again, I must reiterate that it cannot affect only producers, but the packers as well.

We are very appreciative of the USDA-APHIS's efforts in responding to this crisis. They have done an exceptional job of reassuring the public that control measures are in place and working. The agency and the media are to be commended for projecting a positive attitude and bolstering consumer confidence in the safety and wholesomeness of our meat supply.

Once again, Senator, thank you. I will try to answer any questions after.

Senator CONRAD. Thank you very much, Eric. Thank you very much for being here and testifying on what is really a very, very important subject to North Dakota and the nation.

Welcome to Robert Carlson, President of the North Dakota Farmers Union. I am very pleased that you are here, as well. If you can proceed with your testimony.

STATEMENT OF ROBERT CARLSON, PRESIDENT, NORTH DAKOTA FARMERS UNION, BISMARCK, NORTH DAKOTA

Mr. CARLSON. Thank you very much, Senator Conrad, for holding this hearing on this important issue that in some ways is dividing the farmers and ranchers that produce beef in our state into two

camps—those that sold before the 23rd of September, and those that sold after.

I could preface as my remarks—I guess two things: First of all, I have provided written testimony but I am not going to read it; and second, I am pleased to say that the position of the North Dakota Farmers Union is very much similar to what Mr. Aasmundstad has just stated is the Farm Bureau position, so that is always a happy occasion when that occurs.

There is some talk in the country about how consumers and the media and government officials are overreacting to the single incident of BSE, and they say, you know, really, we haven't scientifically proven the link between BSE, eating an animal with BSE, and the variant Creutzfeld Jakim disease and others have said, you know, your risk of contracting BCJD from eating beef is about equal to your risk of being buried in an avalanche. That may be so, but people can avoid an avalanche by staying away from the mountains, and we don't want people to stay away from beef. They need to feel assured that beef is one hundred percent safe for them to eat, so we must take actions that really provide safe beef, and give assurance to consumers that it is safe.

We support the actions that you outline, Senator, that the USDA has taken and FDA have taken so far. We proposed early on—in fact some cases they have exceeded what we proposed early on that no meat from downer cattle go into the retail system until the test results were in, and that all animals should be tested. The Secretary banned all downer cattle from the food supply, which, I think, looking back, was the appropriate decision to make to satisfy consumers that their food was safe.

In addition to the measures recently initiated by USDA and FDA, let me enumerate a few steps, and if you have the written testimony, I am starting on page 4 here, and sort of not reading it, but hitting some of the points that are bulleted.

We would like to see additional testing of cattle, particularly of imported beef. We believe that there is not enough testing. We need to do more testing, particularly of the beef that is imported into this country, the boxed beef and the live animals. I believe that this is already being done, but we also ask that the U.S. immediately ban the processing, blending and shipment of meat from any animal that has been tested for BSE until the test result are returned.

Another point: USDA should suspend its current rulemaking process which was initiated to establish regulations governing the resumption of live cattle imports from Canada. Simple prudence dictates that the first Canadian BSE incident was not isolated, and that a much more concerted effort must be put in place to the prevent further expansion of the disease into the U.S. production and market system.

USDA should rescind its prior rules and regulations governing the importation of beef products from Canada. And so I am agreeing with you, Senator, and with the Farm Bureau on this issue with the Canadian imports.

We also believe that the Bush Administration should rapidly pursue the finalization of reasonable, cost efficient and workable rules for the implementation of mandatory country-of-origin labeling,

and seek congressional action supporting an expedited schedule for its implementation, rather than encouraging further delay, as has been the case. Mandatory country-of-origin labeling will help restore any loss of consumer confidence in our food safety protection system by providing additional information to our domestic and foreign customers while improving the traceability of products through the food chain.

Frankly, Senator Conrad, Farmers Union members are frustrated with the U.S. House, which voted December 8th to delay the implementation of country-of-origin labeling for 2 years, and we are hopeful that the U.S. Senate will take a more thoughtful approach to COOL when it resumes work on the omnibus appropriations bill, perhaps later this month.

Another point: If market prices do not recover, we would urge the Bush Administration and Congress to consider emergency economic assistance for producers who suffer economic and market losses as a result of the BSE incident. Without a commitment of Federal assistance, many beef producers in rural communities which rely upon them are likely to suffer irreparable damage as a result of a problem beyond their control.

We urge speedy implementation of a mandatory animal identification system that spans the food chain from producer to consumer. This program is integral to homeland security. As such, we ought to use the resources of the Federal Government, resources meaning financial resource, to assist producers in implementing such an identification program. We must restrict access to this data base to ensure it serves the interests of the producers and consumers.

Here are a few specific concerns about a mandatory animal identification program.

No. 1, liability provisions: Producers should not be made scapegoats for every food-contaminated recall of products. For example, a cow processed with e-coli in its digestive system does not itself contaminate the meat. Meat becomes contaminated during processing. Packers and processors could try to escape liability by stating the owner of the cow is at fault. Unless there is willful negligence or fraud, producers should not bear liability.

Program costs: Considering that the Secretary of Homeland Security has stated the U.S. needs mandatory animal identification to combat terrorism—along with concerns about animal health and food safety—it only makes sense that the Federal Government pay for creating and maintaining the data base, and compensate producers for costs of implementing animal identification.

Country-of-origin labeling: We ought to require USDA to use this system and implement it immediately, along with the animal identification system.

Use of proprietary information: This is important. Any animal identification program should be governed by clear limits as to how the information may be used and by whom. The information should not be used by packers to affect prices paid for livestock, nor should it be given out to telemarketers or made available to the public. One concept calls for restricting this information to public officials only for purposes of tracing animals or health or diseases, with the

exception that country-of-origin labeling follow through to consumers.

Data base control: This information must be kept and controlled by the government or government agency, and not subcontracted out to new or established private entities.

Farmers Union stands ready to provide any assistance to implement these initiatives which we believe will be useful in restoring our nation's reputation as a supplier of high-quality products.

We also recognize that this process and the information surrounding it is constantly evolving and changing, and the recommendations that we make today may be added to and probably will be added to in the near future. I look forward to any questions. Thank you.

Senator CONRAD. Thank you very much for the excellent testimony from both of you. I appreciate that.

I have talked about four specific measures, and I would like to review each of them with both of you and get your response.

No. 1: I have said, immediately in the aftermath of this event, that we ought to continue the ban on all live cattle coming in from Canada to this country, as a prudent measure to protect our consumers and our industry. Do you agree with that position?

Mr. AASMUNDSTAD. Absolutely.

Mr. CARLSON. Absolutely.

Senator CONRAD. The second point I had made is I have called on the Secretary to review her decision to allow boxed beef to come into this country from Canada. Again, it seems to me, as a prudent measure, that decision ought to be reviewed and overturned.

Mr. Aasmundstad, what would your position be?

Mr. AASMUNDSTAD. I would tend to agree with that, Senator, for the time being, until they can prove that the Canadian supply of boxed beef is safe. You know—and there, again, this will go back to the rumor of the feed mill in Alberta has not been following the ban on ruminant products and feed.

Another thing that we should possibly do is demand that the Canadian government do a review of their inspection system regarding feeds and feedstuffs, to guarantee that they are following the international rules that apply to the feeding of ruminant by-products or ruminants. That, to me, would be another good step.

Mr. CARLSON. Reviewing the imports of the boxed beef, yes, I think that is a prudent thing the do. There has been the assumption that in animals 30 months of age and younger, there is not a threat of BSE in that meat, and yet about the time I thought that that seemed to be the scientific case, we slaughtered, euthanized, lethally injected and then buried in a landfill, 440-some calves that were I think under a year old, so I think, as Eric said, the issue of science there does need to be reviewed.

Senator CONRAD. I do think that is a reasonable and prudent step. I know Canada will mightily resist it, but, you know, our first, I think, obligation is to assure our consumers and our industry that every step has been taken to protect them.

The third point I have made is that with respect to a national identification system, that that should be borne, the cost of that should be borne by the Federal Government. The Federal Government is imposing the requirement in the national interest, I agree

with that, but that tells me it should be paid for by the Federal Government, not shifted to the industry.

What would the position of Farm Bureau be on that?

Mr. AASMUNDSTAD. I would certainly say that if it was a move by the Federal Government that benefited only the producers, then maybe there would be an argument for the producers to pay for it, but this doesn't affect only the producers and benefit them. It benefits them, it benefits the packers, it benefits the entire chain through the consumers, to our foreign customers, what have you, so certainly, as we said in our testimony, we don't think that this should be borne by the producers, but rather the Federal Government would be a place to do that.

Also, when we talk about identification systems, I think that every safeguard that can be made has to be taken to assure that this is not used as a transfer of liability back to the grower. That is an absolute must. If we can look at a national mandatory animal identification system as a marketing tool, if you will, for the safeness of U.S. beef products, then we are going down the right road, but if we are going to use it as an industry means for transfer back to the producer, then we have missed the mark.

Senator CONRAD. Very good point.

Robert?

Mr. CARLSON. I would just say ditto to all that. This is an issue of national security, homeland security, so it is appropriate that the Federal Government pay for implementation of the system.

Senator CONRAD. The fourth point that I think is critically important is the connection to country-of-origin labeling. If we are going to have a national identification system, obviously that is connected to country-of-origin labeling. You can't very well have a system without an ability to say what country it came from. In light of the Canadian experience, it seems to me even more clear that country-of-origin labeling is critically important to protecting our consumers and our industry.

Eric, your reaction?

Mr. AASMUNDSTAD. The most important thing we can do, Senator, as producers of foodstuffs, is to make sure that our consumers are given a safe product. Now, if we are going to guarantee to our customers worldwide and to our consumers here at home that our domestically grown beef is safe, then by all means, we need to identify that meat in all of our other products in the United States, so that we can differentiate our products from those products that come here from the rest of the world. If we are going to go out there and say, "Buy from the U.S. because we are the safest," then we have to have a way of proving it, and country-of-origin labeling is probably the only way that we can do that.

Senator CONRAD. Robert?

Mr. CARLSON. We have been working for country-of-origin labeling since 1993, and I think that history is on our side, and that sooner or later we are going to overcome all the resistance and we are going to have it, and the sooner we have it the better. I am mystified by some groups that still find it objectionable.

Senator CONRAD. If I can, just for the record, insert here a letter that I sent to the Secretary yesterday, I said, in part: "I ask that USDA reexamine its earlier cost benefit analysis of the feasibility

of implementing country-of-origin labeling. The reason for my request is straightforward. According to USDA's previous analysis, much of the assumed cost of country-of-origin labeling is associated with the record keeping involved in identifying livestock and meat as it moves through the food chain. However, implementation of a livestock ID system would put in place a foundation that can only facilitate country-of-origin labeling implementation. Thus, whether one supports country-of-origin labeling or not, having a livestock ID system in place would likely change the feasibility of implementing country-of-origin labeling in a fundamental way. Therefore, I ask USDA to reevaluate the costs and benefits of country-of-origin labeling, with the assumption that a livestock identification system will be made operational as announced by USDA."

I think that is just a very important point to make.

The fifth point and final point that I would make is on the question of providing assistance to those producers affected. For example, we know herds are going to be destroyed, already have been, are in the process of being. Should that full cost be borne by the producers, or there should be some assistance to those who could potentially be wiped out through no fault of their own?

Eric, what would be your judgment?

Mr. AASMUNDSTAD. Inasmuch as the identification system would be a Federal mandate that you, yourself, Senator, feel should be paid for by the Federal Government because it is a Federal mandate. Also the destruction of livestock associated with this or any other catastrophic disease is controlled by the Federal Government, mandated by the Federal Government, we certainly think there should be assistance from Federal Government to ease those producers through the time that they have to struggle with while their herds are destroyed and transition into something else, certainly.

Senator CONRAD. Robert?

Mr. CARLSON. It isn't the producer's fault. The producer had no hand in wilfully injecting BSE into this herd, and I think there are precedents in other cases for compensating producers whose herds or animals have been destroyed because they are carrying disease.

Senator CONRAD. One other issue I wanted to raise with you, and that is the question of downer cattle, because there is, I think, a legitimate question whether or not there has been somewhat of an overreaction. There is now a complete ban on downer cattle, and I think all of us would agree that downer cattle that are diseased should not go into the food chain. But I think its also the case, I think everybody here knows the reality is there are some cattle that are not diseased that are classified as downer cattle. They are cattle that have a leg broken in a pen, they are cattle that have been injured before they ever get to slaughter and that are perfectly healthy, and that could easily be subjected to testing that would then tell us whether or not it is appropriate for them to go to slaughter or not. I would just like your reactions on that question. It is the one thing that has troubled me a bit about USDA's order, and it was very important that we take aggressive action, but I also think we don't want to abandon facts and we don't want to abandon science, and we should not be restricting animals that are fully healthy, other than they may have an injury. We certainly don't want cattle that are ill, we don't want cattle that present any

kind of real threat to the food supply, but on the other hand, I don't think it is wise to be preventing cattle from going into the food supply that have been fully tested and are healthy.

Eric, your reaction?

Mr. AASMUNDSTAD. Certainly, as in a lot of things, the details are in the definitions. Now, the steps that were taken to ban all downers needed to be done—at that moment in time it probably did. As we react to things so often, the pendulum goes so far one way, then it has to come back before we find any reason in it. But I would agree, Senator, that we have to define what a true downer is. We agree there shouldn't be a wanton waste of perfectly good meat just because an animal is injured. So certainly there has to be some moderation, and science can't be ignored.

Senator CONRAD. Robert?

Mr. CARLSON. To answer the question, it is a case of perception and reality. A steer that is injured in shipping, you know, is, if it was tested, that there would be nothing wrong with that meat and can be put on a retail counter. The perception, though, I noticed even the Bismarck Tribune kind of in the heart of cattle country, in a recent editorial talked about how great it was to ban all downer animals, and they even went on to say that they don't want any meat from those animals fed to Fluffy and Fido, either. So I guess the reality is that testing would be the proper thing to do in terms of determining the safety.

The word "downer" animal in itself is not a very marketable concept, so maybe this is a cost that has to be borne, you know, for awhile, at least to get consumer confidence back.

Senator CONRAD. The thing that struck me is the use of language. Downer cattle, nobody wants to have any association with downer cattle. Maybe what we need is a better use of the language, and a more careful definition. What we need to be banning are unhealthy critters, whether they are downer or whether they are still ambulatory. That should not be the issue. It seems to me the issue is healthy or unhealthy. Those livestock that are unhealthy should not enter the food chain in any way. I think that would be our overwhelming agreement, the consensus. On the other hand, healthy animals should not be prevented from going into the food chain. I think all of us know, from growing up in this part of the country, that there are perfectly healthy animals that are designated as downers, and they have maybe broken a leg in shipping. Those animals should not be prevented from going into the food chain, and what we need is a more careful definition of what the real risk is.

Any final thoughts or statements either of you would want to make?

Mr. AASMUNDSTAD. I would just say, again, that the animal identification system, COOL, is of the utmost importance not only to the livestock industry but also our business of providing raw materials for food, the business of farming. We can't wait until we have a wreck in another segment of our industry. We have had one here, and thankfully it is not as bad as it could have been, and like you said, getting better. But let's not wait until we have a wreck in vegetables or table grapes or something along that line that come

in from Chili or Argentina, or what have you. Let's get done what we need to do, and do it now.

Mr. CARLSON. There seems to be, at least kind of generally, a lot more interest in food safety. I noticed this morning on CNN talk about salmon, and talk about certain vegetables and so forth, and it seems to me that we are going to need to have USDA do more testing of a lot of food products in addition to beef. As I understand, today, administration officials, and so on, are meeting with a Japanese delegation about reopening beef sales. It will be very interesting to hear what comes out of that meeting, but I would be very surprised if it didn't call for a large, large increase in our testing regime.

Senator CONRAD. It is very interesting, if you look at country-of-origin labeling, there is no delay recommended for catfish, but there is a 2-year delay on beef. You know, I don't think that difference can be justified, especially in light of USDA's call for us to move ahead with respect to an identification system.

If we are going to have an identification system, clearly, you are going to have to identify what country the cattle come from. I think that is just clear. So, hopefully, we will be able to move ahead in a way that makes sense for consumers and makes sense for the industry.

I think it is very clear we send a clear, consistent message to USDA on these issues. I certainly think both of you have done that here this morning, and I appreciate it, and I thank you for the testimony.

Mr. CARLSON. Thank you.

Mr. AASMUNDSTAD. Thank you.

Senator CONRAD. We will call now on the second panel, including Jeff Dahl, President of North Dakota's Stockmen's Association; Terry Duppong, representing R-CALF; Dr. Larry Schuler, State Veterinarian, North Dakota Department of Agriculture; and Dr. Craig Galbreath, Doctor of Veterinary Medicine from Oakes Feed, Oakes, North Dakota.

As they are coming forward, I would like to just take a moment on a personal note, if I could, to congratulate Wade Moser, who has been named Agriculturalist of the Year, chosen by North Dakota State University Saddle and Sirloin Club for that honor. And, Wade, we would like to just publicly acknowledge that significant honor, and say it is well-deserved. It is in the record of the U.S. Senate, so congratulations to Wade. That is something you can be forever proud of.

I am just delighted at the next set of witnesses that we have, because we are bringing to the witness table not only representatives of the industry, but also medical professionals, those who know this subject intimately and know it well, and I am just delighted that Dr. Schuler, the State Veterinarian, is with us; that Dr. Craig Galbreath, also a veterinarian from Oakes Feed, somebody that understands the feed side of this issue is with us; and, of course, Jeff Dahl, our outstanding President of the North Dakota Stockmen's Association; and Terry Duppong, representing R-CALF.

I thank you all for being here. I think this testimony is going to be very important to the record of the committee, and to help with an understanding of the public of precisely what has happened.

With that, I would ask Jeff to begin with your testimony, if you would, Jeff, and then we will go to Dr. Schuler, and then we will go to Terry, and finally we will ask Dr. Galbreath at the back to clean up. OK?

Jeff, welcome.

STATEMENT OF JEFF DAHL, PRESIDENT, NORTH DAKOTA STOCKMEN'S ASSOCIATION, BISMARCK, NORTH DAKOTA

Mr. DAHL. Thank you, Senator Conrad, for the opportunity to provide you with our comments today. Let me start by thanking you on behalf of the North Dakota Stockmen's Association for the factual, positive statements you have made on behalf of the beef industry about the BSE situation over the last couple of weeks.

It appears that the situation is beginning to stabilize, as is usually the case when calm thinking prevails. The BSE issue does present some problems that need to be addressed, and with your permission, I would like to touch on them before I discuss our budgetary concerns. We believe they would have required some government action.

First, it is our belief that the expanded limits on cattle-futures contracts need to be removed. The expanded limits resulted in a knee-jerk reaction that cost cattle producers about 20 percent in equity in 5 days. If the original $1.50 limit had been maintained, it would have taken 10 days of limit-down to reach the same level. In this case, the amount of information gathered in those five extra days would have done a lot to alleviate concerns in the marketplace. We feel that government involvement may be needed to accomplish the removal of the expanded limits.

Second, on the issue of trade, Stockmen's Association would like to see that any proposed free (fair) trade agreements are delayed, and that the government and the livestock industry aggressively pursue resumption of trade with our international customers, which you already indicated is being done. Stockmen's Association also seeks to delay any implementation of live-cattle imports from Canada.

In regard to BSE, specifically, Stockmen's feels USDA-APHIS should take a proactive stance by requiring any country that wants to trade with the United States to have in place a similar feed ban and BSE surveillance program.

Third, on country-of-origin labeling, COOL appears to be the major sticking point in passage of the omnibus appropriations package. As we discussed earlier, our members support COOL. At the same time, they realize that COOL needs to be implemented in the least-cost manner for producers. When we visited last, we proposed that one of the ways to implement COOL at very low cost—or whatever the cost is to do a rule interpretation change—is to remove cattle from the J-list and to change the interpretation of beef's "final purchaser" as the retail customer, rather than the importer.

We, as an organization, do have some concerns about how the existing law will be implemented, and we have attended several meetings to discuss alternative means of implementation.

In regard to the budgetary issues, Stockmen's Association would like to address three items that deal with food safety and agricul-

tural programs. For decades, North Dakota has produced leaders, people in the forefront with ideas that have advanced our industry. As you will see, there are projects in the development stages here in North Dakota, that if properly funded, could accelerate the results that are needed not only in this country but worldwide.

First of all, we urge that funding be provided to USDA for research to find a reliable tests for BSE that can be conducted without having to destroy the animal. We would also like funding to be provided to do genetic research to determine if there are cattle that are genetically resistant to BSE, much like there are sheep that are resistant to scrapie. Beef System Centers of Excellence is a project underway in the state that, if properly funded, would go a long way toward developing economic opportunities in North Dakota, and would also be able to do research to address the industry priorities, such as alternative rendering procedures, other food safety issues, such e-coli, and new product development.

We recommend that you consult with Dr. Ken Odde, North Dakota State University Animal and Range Science Department chairman, about what level of funding Beef Centers of Excellence needs to get off the ground and to get working on these important issues.

Second, the Stockmen's Association feels that the National Animal Identification Program needs to be implemented as soon as possible and, since it is a government-mandated program, the government should provide the majority of funding. The proposed budget of the draft ID plan calls for $70 million in the second year of the program. However, if implementation of this program is accelerated, we feel $100 million will be needed for it to be implement properly.

Stockmen's Association had the foresight 3 years ago to see the benefits of this program, and supported legislation that was passed addressing animal identification here in North Dakota. Pilot projects need to be instituted for the National Animal Identification Program to work out problems with the program on a small scale before it is mandated on a national level, when fixing problems will be more difficult.

North Dakota is in a position to run a pilot project. Because producers will bear some of the cost of the ID program and because the technology it employs is capable of managing multiple data bases, we recommend that duplicate government-mandated programs be eliminated. Examples of this might be the brucellosis and back-tag programs and health certificates for interstate movement.

Cattlemen are willing to share information to keep the U.S. and world food supply the safest in the world, but are concerned about keeping their records confidential. We urge that safeguards be put in place to protect the integrity of the records.

And finally, Stockmen's Association is weary about the Senate reopening the omnibus appropriations bill for fear of losing drought provisions and funding for food safety and rural development programs. Most of North Dakota went into this winter in a very seriously dry condition, and if the drought conditions continue into this spring and summer, producers will need help to feed their livestock, and the necessary funding needs to be available in a timely manner to do the most good.

With that, in closing, I thank you again for giving us this opportunity to provide comments today, and if Stockmen's can be of any help in the future, please contact us.

Senator CONRAD. Thank you very much, Jeff. Excellent testimony.

Dr. Schuler, thank you for being here. Please provide your testimony.

STATEMENT OF LARRY SCHULER, DVM, STATE VETERINARIAN, NORTH DAKOTA DEPARTMENT OF AGRICULTURE, STATE BOARD OF ANIMAL HEALTH, BISMARCK, NORTH DAKOTA

Dr. SCHULER. Thank you, Senator. I appreciate your inviting us here today and allowing us to comment on the recent case of bovine spongiform encephalopathy in the United States and issues related to prevention of new cases and also to further protect the animal and human health of this country.

We would like to begin our comments by saying that we believe that the U.S. beef supply is safe. There is very little risk to the beef-consuming public. The fire walls that the U.S. has erected in the past are effective fire walls, and based on the 2001 Harvard University Center for Risk Assessment report, which in laymen's terms says that if BSE was imported into the United States, the existing control measures would eliminate the disease within 20 years, and during that time human exposure would be extremely small.

We can also use the United Kingdom as an example of how BSE behaves in a population. At the peak of the BSE epidemic in the UK, they were reporting approximately a thousand cases of BSE per week.

Senator CONRAD. A thousand cases in the——

Dr. SCHULER. In the United Kingdom.

Senator CONRAD. In the herds?

Dr. SCHULER. In the cattle, yes. I am sorry. During that time, or at the beginning of that epidemic there were very few control measures in place to prevent human exposure, and yet in history, there have been only been an approximately 140 cases of human variant CJD, even based on what we would classify now as extreme exposure, so a single case in the U.S. would expose human health, the human population of this country at exponentially smaller levels.

Senator CONRAD. It would be almost mathematically—it is almost impossible to state, isn't it? I mean the risk is so infinitesimal.

Dr. SCHULER. You are absolutely right. In regards to our reaction to the response of the USDA to date, we do support what USDA has done to date. The diagnosis was made quickly. The animal was slaughtered on December 9th, the announcement was made December 23rd. That is a very good turnaround on a routine surveillance animal.

We support what USDA has done with the cooperation of the State of Washington to control the spread of the disease and prevent the movement of the animals out of the herd. And we support the safeguards Secretary Veneman announced, and you have already outlined on the board here. We do think that in some ways

they have not gone far enough to address all of the concerns, and we will address those in a little bit.

One other issue that has happened is that state officials have been meeting state veterinarians who, for the most part, felt a bit out of the loop on information on BSE because our first knowledge of the BSE case was when we heard it on CNN, and we subsequently—all of the information that we have received to date has been from the technical briefings that USDA has done for the media. This leaves us, as state officials, at a disadvantage because we are receiving information at the same time as the media, and don't have a lot of time to react to it. USDA frequently refers to state officials as partners. In this particular situation, we felt a bit like spectators rather than partners. That is probably my issue, we would have felt more involved if we would have been notified.

Some of the priority issues that we would like to bring forward: First and foremost, our primary concern has to be consumer safety. As I said earlier, we believe our beef supply is safe but we think USDA and its partners need to review the beef production system and take the necessary steps to close loopholes that could possibly result in human or animal exposure.

Second, we believe the next highest priority for USDA should be to reestablish export markets. Exports of beef sales makes up 9 percent of the beef industry sales. Loss of these markets has resulted in a substantial loss to livestock values. The industry can withstand short-term market drops, but longterm price drops would be devastating to the industry. This loss would make a difference in the survival of the cattle industry producers, who prior to this BSE case were anticipating and needed record prices for their animals.

We believe USDA should respond to the BSE case in Washington much the same way that Canada responded to the BSE case in 1997 that recalled the British imports. Basically, at that time the affected herd was depopulated and tested for BSE, all animals were traced out of that particular herd, and we believe this is what should occur in the U.S., and including the 81 animals that were imported with this animal. Congress should provide funding for the appropriation of testing, and indemnity of the owners. We estimate this would probably companies 7 to $10 million, which is a small price to pay for a lost export market in excess of $3 million.

Additionally, we believe that we should trace back Canadian animals that have been imported into the U.S. There are an estimated 300,000 or 400,000 breeding animals in the U.S. imported from Canada, and this would appear to be an insurmountable task, however, the traceback could be focused on cohorts of the Canadian animals that have been identified with BSE, and traceback of animals over 5 years of age that were imported from the province of Alberta and Saskatchewan.

Senator CONRAD. Repeat that for me once again. I want to make sure I understand that point. When you are talking about traceback, you are talking about 5 years. Explain that to me.

Dr. SCHULER. Actually, what I am saying is that we believe that USDA and state officials should attempt to trace Canadian breeding animals that are present in the U.S. in an effort to inform our trading partners that we have taken the steps necessary to make

sure the BSE isn't existing in the beef population. There are 3 to 400,000 breeding animals in the U.S. from Canada, and that would be a major task, but what I am saying is we can focus the traceback on animals that would be cohorts of the animals that have been identified as BSE animals. They both originated in Alberta, virtually, so if we focused our traceback to older animals that were both 6 and 7–1/2 years of age, so if we build in a safety factor of tracing animals that are 5 years of age and older, and animals from Alberta and Saskatchewan.

Senator CONRAD. That would dramatically narrow it, wouldn't it? Instead of 3 to 400,000, you might be down to 30 or 40,000?

Dr. SCHULER. That is correct. Actually, in our office we are starting that process. We have hired a temporary person to go through health certificates, and we are trying to develop a list and see what number of animals would be in North Dakota.

Senator CONRAD. Why do you pick 5 years or older? Why wouldn't you pick 3 years, or more than 30 months, for example?

Dr. SCHULER. Actually, we were looking at animals that would have been born before the ban and——

Senator CONRAD. I see what you are saying.

Dr. SCHULER. And built in a little bit of safety factor into that, so rather than saying 6 years, we are saying 5 years as a bit of a safety factor.

Senator CONRAD. Because if Canada took steps going back that far, that would dramatically reduce the risk.

Dr. SCHULER. Yeah, a Canadian feed ban, ruminant protein feeding ban went into effect in August 1997.

Senator CONRAD. 1997? That is where you get the 6-years?

Dr. SCHULER. Yes.

Senator CONRAD. OK.

Dr. SCHULER. We also believe the U.S. should set import standards that are at least equal to international standards.

Senator CONRAD. Can I just stop you for another minute. Have you communicated with USDA on this traceback issue?

Dr. SCHULER. We are just starting to communicate on it. There has been some discussion in the past. Most of USDA's response was that it would be too hard of a task, tracing the 3 to 400,000 animals would be more of a task than what could be accomplished. The idea of focusing, on the traceback, on the cohorts of the affected animals is something that is new and we haven't had the opportunity to do that yet.

Senator CONRAD. I would encourage you to do that, because I think that has merit, and that is really very focused. You are talking about a specific geographic area, you are talking about specific age. That would clearly dramatically reduce 3 to 400,000 to a much more manageable number, and something that could realistically I think be accomplished, if we are talking in the range of 30 to 40,000 head. That may well be something that has real merit. Obviously, we want others to review the proposal and the specifics, but I think a traceback mechanism focusing on those that are the highest risk, that strikes me as having some merit.

Dr. SCHULER. And as I said, I am not sure of the numbers we would be looking at. We are still trying to pull that information to-

gether in our office, just to get an idea of what would be present in North Dakota.

Senator CONRAD. I think we could probably guess it would be a very dramatic reduction from the 3 to 400,000, wouldn't you agree?

Dr. SCHULER. Absolutely.

Senator CONRAD. We would be then focusing on really a fraction of that number, based on the screens that you have suggested here. OK?

Dr. SCHULER. With regards to being at least equal to international standards, the proposed rule regarding BSE Minimal Risk Regions allowed a standard that was less than international standards. OIE, Office of International Epizootics has standards for regions, particular standards, and we believe that having standards lower than international standards will actually make our hope of reestablishing export markets slim. We have seen the response of our major trading partners to the Canadian case and to the U.S. case. We are concerned that unless we maintain a ban that is at least equal to international standards, we will have a difficult time justifying reestablishing——

Senator CONRAD. And what share of our total market, our exports—my understanding is it is roughly 10 percent.

Jeff, would you agree with that?

Mr. DAHL. 10 percent on a dollar value? It is probably closer to 15.

Senator CONRAD. On a dollar value it is a little more, because what we are exporting are the higher grade cuts, especially to Japan. OK.

Dr. SCHULER. Another issue with regard to establishment of trade is the ruminant feed ban and the potential loopholes that are in it. The European Union has a Scientific Steering Committee that conducts an assessment of Geographic BSE Risk Assessment, or GBR. Nations or regions are classified according to the risk level that exists based on the factors that the Scientific Steering Committee has developed. Currently both the U.S. and Canada are classified as GBR Level II. That means, in the eyes of Steering Committee, BSE is unlikely to exist but they can not exclude it totally. When the Scientific Steering Committee reconvenes, Canada will, based on the criteria, move to GBR Level III. GBR Level III says it is likely to have BSE or it is present at a lower level. Based on the number of Canadian imports of live-cattle and feed in the U.S., the U.S. will probably also go to a GBR Level III.

Senator CONRAD. When would that occur?

Dr. SCHULER. Sometime after Christmas is the date I have heard.

Senator CONRAD. This coming Christmas?

Dr. SCHULER. No.

Senator CONRAD. This last Christmas? So we are talking about something that might occur in the near future? That would have consequences for our regaining export markets, would it not?

Dr. SCHULER. Yes, it will, because we will have slipped a step in status. The key to regaining our level of status, though, is to break the transmission cycle, and as we have heard, transmission of BSE from animal to animal only occurs through the feeding of ruminant

protein. There is some debate about maternal transmission to calf, but that is still not known for sure.

Senator CONRAD. That is speculative?

Dr. SCHULER. Right. So the primary means of transmission is ruminant, ruminant feed. So therefore, eliminating loopholes in the ruminant feed ban is a must. As part of our ability to reestablish our export markets, some of the things we suggest, with Secretary Veneman's announcement that Specified Risk Materials will be removed from cattle slaughtered for human consumption, SRMs will be removed. Currently, SRM will be allowed to be rendered. We believe that the material should not be allowed to be rendered, since very few rendering plants have dedicated lines for rendering of ruminant products.

Senator CONRAD. So you could get cross-contamination?

Dr. SCHULER. Yes, potential cross-contamination.

We also believe a poultry litter ban should be installed. Poultry litter should not be allowed. Currently that is allowed. There is a certain amount of spillage of ruminant proteins from poultry feed, and therefore, it gets fed back to ruminants.

We believe that standards for maximum protein levels in tallow should be set. The U.S. does not at this time have maximum standards for the level of protein in tallow, and that would be a source of ruminant protein that—tallow that is used for feed.

We believe that USDA should expand their feed ban compliance inspections.

We also believe that border inspections should be improved to prevent the importation of feeds or feed ingredients that contain ruminant protein.

And we also believe that further scientific review of the other debatable items, such as blood meal, and plate waste in ruminant feed would be considered.

Another issue is BSE surveillance. The U.S. has to increase their surveillance in order to meet the requirements of our trading partners and the requirements of our consumers. We need to consider stringent standards with regard to those countries that impose a higher standard on their own, so we can be at least equal to the countries that we are expecting to export to.

The removal of downer animals from slaughter channels has actually eliminated a source of samples for BSE surveillance, so we need to develop other creative strategies to provide adequate surveillance to get adequately statistically significant numbers.

Senator CONRAD. Maybe I could just pick up on that point, because some have said this ban on downer animals takes animals out of the system for testing that would help us identify whether we might have a problem or not, and so that we need to have some other method of testing those animals so that they are within the system, so we have a better data base. Is that what you are saying?

Dr. SCHULER. That is correct. We need to develop new strategies for obtaining samples on the animals that are no longer available because of downer.

Senator CONRAD. OK.

Dr. SCHULER. The U.S. currently uses immunohistochemistry or IHC as a standard test for BSE in this country. It is a costly test, a time consuming test, and we urge the use of quicker tests.

Senator CONRAD. Can you tell me, as a scientific matter, how long it takes to get test results using that method? I have been told 9 to 10 days. Is that correct?

Dr. SCHULER. I don't believe it is quite that long. It is probably more like 5 days. The quicker tests are highly sensitive and specific. We don't get a lot of false positives, not a lot of false negatives. They can be run in several hours. They can be set up to be done on a large scale. The cost is roughly $15 a test.

Senator CONRAD. So there is no reason we couldn't go to the quicker tests, in terms of kind of a broad screening, and then if we get a positive we could do an IHC.

Dr. SCHULER. That's right. That is what we would recommend is that the quick test be used and confirm with IHC when it is positive.

There has been considerable talk about the U.S. animal identification plan. We are fully in support of that. It will provide the U.S. with a system to trace back animals. The goal is actually to be able to trace back animals within 48 hours of a situation where we need to trace them back. A lot of the plan is based on an electronic ID, and there is a U.S. animal ID plan that has been written, and there is a website available for reviewing that. I have included it in my comments.

Senator CONRAD. All right.

Dr. SCHULER. We do support it, and this document is still a document that is changing. It is open for public comment until the end of January. Actually, there is a budget attached in here that is on page 47 and 48 that I would ask you to review.

Senator CONRAD. Does that have $25 million the first year——

Dr. SCHULER. The number I have been working with is $20 million the first year, but then again, if we do a rapid startup, it is going to cost more.

Senator CONRAD. I think Jeff mentioned they anticipate it could be $70 million the second year, that if they have a speed-up we may be talking about $100 million the first year. It is obviously very important, though, how much money needs to be allotted in the President's budget for this matter. As I heard Jeff say, he thinks it may be as much as $100 million if we have speeded up implementation. Would that be a conclusion close to your own.

Dr. SCHULER. Based on the projections in this document years 4, 5, 6 are $125 to $130 million a year. That is once the system——

Senator CONRAD [continuing]. Gets up.

Dr. SCHULER. Yes. I agree with Jeff that if we do a rapid startup of the system, it is going to cost more.

We support solutions in keeping export information and keeping the information confidential. From an animal health perspective, really only thing we need is who has owned the animal, where it is moved to, and that is what our information should be restricted to. The United States Animal Health Association, which is the association of animal health officials of the country, passed a resolution which is attached to the testimony that encouraged—that accepted this plan as a work in progress, and encouraged its further development.

Another issue that we don't hear talked about much is maintenance of ID. Living in a border state, it is clear to us that animals

leak out of trade channels from which they are imported. It is not uncommon to find slaughter animals outside of slaughter channels, or feeder animals outside of feeder channels. As a matter of fact, it is not uncommon for ID tags to be removed prior to resale to improve market value of the animals. There are currently no restrictions on removal of ID tags from animals after they are imported into the U.S. We believe it is imperative that regulations be developed that prohibit the removal of the official ID from animals. USDA must enact internal emergency regulations prohibiting removal of any official ID from animals imported from a foreign country. A meaningful penalty must also be associated with the removal of an official ID. Actually, with the Washington case, the fortunate part about that is that the official ID still existed on that animal and it was a Canadian ear-tag.

With regards to country-of-origin labeling, we believe that it is important with regards to protecting consumer confidence in the U.S. food supply. COOL would give consumers at least the opportunity to select products which they perceive as safe. We recommend COOL be fully implemented, so that U.S. consumers would have more specific knowledge as to the origin of the beef. This would arguably lead to a smaller decrease in the expected demand for beef as a result of a disease situation.

Increased laboratory capacity is another issue that, because we have to increase BSE surveillance, we need to increase laboratory capacity. We urge Congress to provide funding to build that laboratory structure that is necessary as a result of the demands for increased surveillance.

Along those lines, we urge completion of the USDA-APHIS-ARS Master Plan for a new facility at Ames, Iowa, to meet BSE surveillance activity, but also to meet other national needs for research and diagnosis and product testing.

Another issue I would like to bring forward is the disparity party in USDA's approach to the prevention of the introduction of a disease into the country. With regards to BSE—or with regards to foreign animal disease, the USDA is proactive, meaning we allow importation only after the country has proved that they are free of the disease. In the case of BSE, we are reactive, in that we don't discontinue imports until the country has a case. This is disconcerting to us because of the long incubation period of BSE and because of the public health issue related to it. We believe that this places the U.S. at risk of importing BSE, since we are continually reacting to BSE cases. We urge the USDA to clearly define proactive standards for trade with regards to BSE.

We talked about advanced meat recovery. Advance meat recovery systems are notorious for containing nervous tissue derived from the dorsal root ganglia, which is a specified risk material.

Senator CONRAD. I am not sure I even want to know what dorsal root ganglia is.

Dr. SCHULER. Dorsal root ganglia are the nerves that come off the spinal cord, close to the vertebral column. Just large nerves, basically, is are what they are.

Senator CONRAD. Now I know I didn't want to know.

Dr. SCHULER. In the worst case scenario of the Harvard Risk Assessment, approximately one-half of the infectious doses to which

humans would be exposed would be derived from AMR products. We strongly urge the prohibition of AMR systems when slaughtering animals, or at least, extensive testing should be required for determining the presence of nerve tissue in the AMR meats.

Yesterday, FSIS published rules which we haven't had time to review yet, but it is related to advanced meat recovery.

In July of this year the Midwestern Association of State Departments of Agriculture, or MASDA, approved a resolution concerning BSE. That is attached to the testimony. We helped draft and fully support that resolution. That MASDA resolution was also sent to the National Association of State Departments of Agriculture.

Senator CONRAD. Is that included in your testimony?

Dr. SCHULER. Yes, it is included in the testimony. And that was adopted with some minor changes.

We thank you for the opportunity to provide this information. We urge aggressive activity by USDA to reestablish our beef export markets. We urge the FDA to reevaluate the ruminant feed ban, and ask them to set science-based standards for tallow in feeds.

As I alluded to earlier, the Harvard Risk Assessment says that "Measures taken by the U.S. Government and industry make the U.S. robust against the spread of BSE to animals or humans should it be introduced to this country." However, with a finding of a case in the U.S., a reevaluation of the BSE prevention strategies is in order, and steps should be taken to further assure that all responsible measures have been taken to assure the protection of the animal and the public health of this country.

Senator CONRAD. Thank you very much.

Senator CONRAD. Terry, good to have you here. Please proceed with your testimony.

STATEMENT OF TERRY DUPPONG, DUPPONG'S WILLOW CREEK FARMS, GLEN ULLIN, NORTH DAKOTA; ON BEHALF OF THE RANCHERS-CATTLEMEN ACTION LEGAL FUND, UNITED STOCKGROWERS OF AMERICA (R-CALF USA)

Mr. DUPPONG. Thank you, Senator Conrad. Together with my wife Patty and two sons—Patty is at home doing chores—Ty and Casey, we own Duppong's Willow Creek Farms in Glen Ullin, North Dakota. We raise registered Angus cattle and finish cattle on our full-time ranching operation.

Our organization has worked tirelessly on behalf of the American cattle producer. Our focus has been on protecting and promoting the interests of independent cattle producers, and it is from that perspective that I come before you today. I appreciate the opportunity to provide comments on this issue as it is very important to the cow-calf operators, backgrounders and independent ranchers who constitute the heart of this country's cattle and beef industry.

The impact of the December 23, 2003 announcement by USDA of a presumptive positive case for BSE in a Washington state dairy cow was immediate and damaging to the United States live-cattle industry. We commend the USDA and its various departments, including APHIS, for doing an excellent job in calming consumer concerns and clearly explaining the BSE mitigation measures the U.S. began implementing in 1989. However, we are disappointed that the USDA has thus far ignored the economic interests of the

United States cattle producers as its actions have of resulted in the subordination of U.S. cattle producers' interests to other interests, some of whom are our foreign competitors.

Despite the fact that the presumptive positive cow was tagged with a Canadian export ear-tag, USDA chose not to disclose this factual information until 4 days after its announcement of a presumptive positive case for BSE. R-CALF U.S.A. had received numerous reports, beginning on December 24th, from members familiar with the investigation, who indicated the cow was tagged with a Canadian ear-tag. On December 26, R-CALF contacted USDA urging the release of this factual information to prevent the market from overreacting. On December 27, USDA finally announced the fact that the cow was tagged with a permanent ear-tag indicating the cow was imported from Canada. However, this information was provided too late, as cattle markets already began to cement its application of a worst-case scenario for this situation. This worst-case scenario was that the United States likely had a native case of BSE, implying that it also had a significant break in its BSE prevention program, including the possible of a contaminated feed supply.

This uncertainty in the market, caused largely because the market didn't have the factual information necessary to mitigate the formulation of a worst-case scenario, was absorbed by United States live-cattle producers, who suffered an approximate $15.91 per hundred to a drop of $190.92, on a 1200-pound steerling.

Senator CONRAD. What is that as a percentage, Terry? Is that about 20 percent?

Mr. DUPPONG. I would say in the neighborhood around 20 percent.

Senator CONRAD. Around 20 percent?

Mr. DUPPONG. Little less.

Senator CONRAD. I was trying to calculate the size of this industry in term of cattle sales, and we say we have got $3.6 billion that we export, and that represents about 15 percent in dollar terms of our industry; isn't that right, Jeff?

Mr. DAHL. Yes.

Senator CONRAD. So that would mean we have got about a $25 billion industry, just in terms of cattle sales. The entire industry more broadly defined, I think, is calculated at $100 billion. That goes to the next step. That goes to——

Mr. DAHL. Dealerships——

Senator CONRAD. Hides. I just want to make sure that we get these numbers for the record, that we are talking about an industry, in terms of sales, it is about a $25 billion industry, $3.6 billion of that is export, in an industry that, overall, has approximately $100 billion impact on this nation.

Would both Terry and Jeff agree with that basic outline of the diminishes of this industry?

Mr. DAHL. Yes.

Dr. SCHULER. Yes.

Mr. DUPPONG. Not only did the United States domestic cattle market receive insufficient information to apply anything but a worst-case scenario to the disease situation, but our international markets were equally uninformed.

On December 23, APHIS submitted the United States' Emergency Report to the World Organization for Animal Health, the international organization that develops animal health standards for its 165 World Trade Organization members, including the United States. In its Emergency Report, APHIS stated that the source of the BSE agent and the origin of the infection was unknown, trace-back and trace-out investigations have been initiated. Thus, the United States' export customers, which are also members of the OIE and respectful of its mission, were officially notified that the United States had a presumptive positive case for BSE, but they were not informed that the infected cow was tagged with a Canadian ear-tag. It was not until at least December 28 that APHIS submitted its followup Emergency Report to the OIE stating that "Preliminary tracing indicates that the animal may have entered the United States from Canada between the 28 August and 25 October, 2001." It is, therefore, the case that the United States' nondisclosure of the Canadian ear-tag on the BSE-infected cow was assimilated by United States' export customers for at least as long, if not longer, than it was assimilated by the domestic market.

Meanwhile, the OIE did not include the United States on its international list of "Territories/Countries Having Reported Cases of BSE in Imported Animals Only." Instead, the OIE classified the United States as having a confirmed case on December 23, without any explanatory footnotes.

The information the USDA provided, as well as the information it did not provide in a timely manner to the OIE, is significant, because the BSE standard established by the OIE and contained in the OIE Code provides that a country's disease ranking may not change if BSE is found in an imported animal. More specifically, if the United States discovers a BSE case in an animal that has been clearly demonstrated to originate directly from the importation of live cattle, and all of the offspring of the infected cattle are destroyed, then such a BSE case does not disqualify the United States from its "BSE provisionally free country or zone" ranking.

It is important that Congress realize that if mandatory country-of-origin labeling were in place when the presumptive positive BSE case was announced, the financial harm experienced by United States cattle producers would not likely have occurred.

With respect to the value of the United States beef export markets subject to risk as a result of the BSE case, R-CALF USA has reviewed the USDA-Foreign Agricultural Service's HS 10-Digit exports and found that the value of beef and edible beef exports worldwide during the first 10 months of 2003 was $2.9 billion. In calendar 2002, the total volume of United States cattle and beef exports was $3 billion.

A risk analysis was recently conducted by APHIS to assess the risks associated with reopening the Canadian border to live-cattle and beef. In its analysis APHIS included additional risks associated with BSE if trade restrictions were enforced against the United States. It estimated that indirect losses to the United States firms that support ruminant exports would equal an additional $2.5 billion annually.

In addition, APHIS estimated that more than 33,000 full time jobs, accounting for almost $1 billion in wages annually could be

jeopardized. Thus it appears that $6.5 billion in export value is at risk.

It is important to note that the United States live-cattle industry is a supply sensitive industry. If our borders remain closed to exports, the 2.4 billion pounds of beef destined for export annually will continue to stockpile; and the continuing flow of beef imports into the United States, in the amount of 3.2 billion pounds annually, will certainly compound our already depressed cattle prices.

This is precisely why, on the day of the BSE announcement, R-CALF USA sent an emergency letter to President Bush and Secretary Veneman urging them to immediately close the United States border to all imports of live cattle, beef, and both raw and manufactured livestock feed until the circumstances surrounding this suspected case are fully disclosed and understood. R-CALF USA explained that this measure was needed to prevent a market collapse caused by a buildup of excess beef supplies. Neither the President nor the Secretary has responded.

The United States does not have a native case of BSE. Our efforts should be directed toward preventing the introduction of BSE from imported sources. To this end, the immediate implementation of COOL is the quickest way to begin accurately differentiating domestic live-cattle from imported cattle; and should any of our livestock importers have any other disease outbreak, we can immediately segregate these animals from the United States herd. Removing livestock from the Department of Treasury's list of exceptions from the general requirement to mark all imported products with a mark of origin, known as the J-list, would immediately enable us to accurately identify all animals that are not born and raised in the United States.

Thank you.

Senator CONRAD. Thank you. That is very important testimony. I am very hopeful some of the news media that have left get that testimony provided to them today, and I am going to ask my staff to make sure that that occurs, because what you are saying here is very important. You are saying that the delay in USDA revealing what they knew put all of us at a greater risk in terms of effect in the market?

Mr. DUPPONG. Correct.

Senator CONRAD. What you are saying, as I understand it, is that USDA knew that there was a Canadian tag on that cow that was identified as having BSE well in advance of when they released that to the public?

Mr. DUPPONG. Correct.

Senator CONRAD. How many days elapsed between the time your people were informed that cow had a Canadian tag and when it was released to the public?

Mr. DUPPONG. We were on conference calls over Christmas, but I think they listed it officially as the 26th, in about a 24–48 hour period when USDA released its information. But the thing is, I think, if I can kind of go off the record here, I think that——

Senator CONRAD. Let me say, nothing is off the record here. This is all on the record.

Mr. DUPPONG. And probably other people on this panel—or Wade can help me on this: I believe that that cow, December 9th, was

the first time in Iowa that this cow was probably determined to have BSE, or the slaughterhouse. At that point in time, if this was the tag——

Senator CONRAD. Have you got that?

Dr. SCHULER. If I could, this is a Canadian ear-tag (indicating), and what was portrayed to us on one of the early conference calls was that she had a small metal ear-tag in her ear, and as it turns out it was a Canadian tag. As I look at the back of that tag it says Province of Origin, so you would have known immediately it was a Canadian ear-tag.

Senator CONRAD. Very clear. It is right on the back. "H of A, Saskatchewan," what does that mean, Larry?

Dr. SCHULER. Health of Animals, Saskatchewan.

Senator CONRAD. So that is a Canadian tag, and that has a number on the front that would be a tracking number?

Dr. SCHULER. That is correct. Individual number for each animal imported on that shipment. That would have been the number that would have been listed on the health certificate when she came across the border.

Senator CONRAD. This is the first time I heard this. This is the first time I heard that they knew this before they released it to the public, and the fact is that that affects—all that information went out to all of those who are our buyers, right? All of those who are international buyers were not informed at the time they could have been, that this was not a U.S. animal at all, that this was an animal that had come in from Canada?

Mr. DUPPONG. Or even the possibility that this animal was from outside our borders; that wasn't even a consideration, either, at their opening press conference.

Senator CONRAD. Well, I just say that is a very, very important fact that people should know, and I just alert those in the news media, I hope they pay very clear, special attention to your testimony here today. You are telling me something I did not know before this hearing.

Mr. DUPPONG. I guess, just from a rancher's point of view, if you knew something on December 9th, such as this, where is the information trail from the 9th to the 23rd to find out—or the 26th, where this cow came from?

Senator CONRAD. Let's go through this. The animal was slaughtered on the 9th, was it not? The animal was slaughtered on the 9th. USDA made a public statement, not until the 26th that this animal had a Canadian tag?

Mr. DUPPONG. Or the 27th.

Senator CONRAD. That is 17 days.

And, Dr. Schuler, you testified it takes 5 days to get the test results?

Dr. SCHULER. Yeah, that is an estimation.

Senator CONRAD. When was the test performed on that animal, do we know? Is it performed at the time of slaughter?

Dr. SCHULER. Actually, the sample would have been sent to the National Veterinary Services Lab at Ames, Iowa, so there was time in shipment, since it was routine surveillance, it probably wasn't a high priority situation where it was done immediately.

Senator CONRAD. So there may have been some gap between the time the sample came in and the time the test was done?

Dr. SCHULER. Right.

Senator CONRAD. But what I hear Terry saying is that your organization heard before Christmas that this animal had a Canadian tag, and yet there was no release to the public, and more importantly, perhaps, no release to—well, what is critical is that there be a release to the public so that those who buy from us know that this was not a domestic animal. That is your point, correct?

Mr. DUPPONG. Correct. They could have alleviated a lot of problems, saying that a case was found in the United States and that they are looking at it.

Senator CONRAD. What I hear you saying is that we would have had less of a price drop if people had been informed in a more timely way that this animal bore a Canadian tag?

Mr. DUPPONG. Correct. Because if I am not mistaken, under international rules we are still a BSE-free state as a nation.

Senator CONRAD. Because it is not a domestic animal?

Mr. DUPPONG. Yeah, if I am not mistaken. Canada had their first case in 1993, in which they revealed to the public that this cow was from Great Britain, and they released that information all at once.

Senator CONRAD. They released it all at once. That they had the cow, and that the cow was from Great Britain, so they were not adversely affected in the sense of being judged a country with BSE?

Mr. DUPPONG. Correct. They did not lose their BSE-free status.

Senator CONRAD. That is big news. You are making big news at this hearing, to be able to tell us that that occurred here. That is a serious matter.

Mr. DUPPONG. Yes, it is.

Senator CONRAD. We didn't get a presumptive finding until Morning Comments on December 29th. 28th, that would have come out, and it would have been in the morning news on the 29th. Well, that is very unfortunate. I thank you for bringing that to the attention of the committee. That is very important to understand.

Why would they have delayed? I really don't understand that. Why wouldn't they have said very immediately that this animal carried a Canadian tag?

Mr. DUPPONG. That is a really good question. Only speculation can answer that.

Mr. DAHL. I asked that question, and the explanation I received was ramifications, if they were wrong, would have been, on trade, would have been great, so they were being cautious. I also was told——

Senator CONRAD. Well, gee, who are they worried about? Isn't this the United States Department of Agriculture? I think sometimes this Secretary gets confused about which country she is looking out for.

During the Farm Bill fight she invited the Canadian Agriculture Minister down to Washington to testify against the United States Farm Bill, and now I find out—and this is the first I heard of this is at this hearing right now, with, Terry, you telling us that your organization knew, days before it was released to the public, that this animal carried a Canadian tag.

It would seem to me the very first thing we do, if you are our Secretary of USDA, of the United States Department of Agriculture, as soon as you knew that, you would state it. If they knew that that carried a Canadian tag, that she had an obligation to inform the public immediately. That is the most disturbing thing I have heard here today. Anything else you want to add?

Mr. DUPPONG. Some day we will do that off the record.

Senator CONRAD. I tell you——

Mr. DUPPONG. I converse with Scott and Tim quite often.

Senator CONRAD. I tell you, Terry, honestly, this is the first I heard this was this morning at this hearing, and I find that very disturbing; that you knew about this, your organization knew about it before the public was informed, and by days. I mean that is not right.

We will go on to our next witness. Are you finished?

Mr. DUPPONG. Yes.

Senator CONRAD. We go to our next witness, Dr. Craig Galbreath, who is also a veterinarian, who is with Oakes Feed.

Dr. Galbreath, thank you so much for being here.

STATEMENT OF DR. CRAIG GALBREATH, OAKES FEED, OAKES, NORTH DAKOTA

Dr. GALBREATH. Thank you. Senator, ladies and gentlemen. As a veterinarian production consultant and producer, I have a vested interest in the reputation of our North Dakota agricultural products. In the years of my profession, I have had numerous interactions with the consumers of our livestock products in terms of beef, pork and lamb at all stages of development. The reputation of our North Dakota calves command respect from feed yards throughout the country. Our ability to diversify and capture added value from these products enables our farmers and ranchers to realize maximum profits from their respective enterprises.

My position as a veterinarian in the Oakes community for the past 27 years has afforded me the opportunity to consult with my clients on many aspects of their production enterprise. Almost daily I visit with my clients in terms of marketing, genetic selection, health care and nutrition, whatever it takes to run a cow-calf operation. On these occasions I am often confronted with misinformation that causes me some concern for the safety and viability of our industry.

About a year and a half ago I became acutely aware that some of our producers were either misinformed or uninformed about some of the rules in effect for ruminant feeding. I had two occasions where someone recommended using swine feed containing animal protein products for feeding cattle. Current evidence suggests that this is the single greatest risk for transmission of the prion, and breaches the safeguards that we have in effect to prevent BSE.

Senator CONRAD. Can I ask you, not the name of the person, but where did you hear this? Was this somebody in the business, or was this is a rancher?

Dr. GALBREATH. This is directly from the producers. They had received information from another party that they should be feeding

the swine feed to their ruminant animals, and I can explain this in a little more depth here later.

My experience in wearing two hats, both as a part-owner of a feed company, or a feed dealership, and also as a veterinarian, escalated my concerns over the improper nutritional consultations.

About a year ago, I began a campaign to get feed dealers and nutritional consultants either licensed or certified by the state so that we had some idea who was out there giving information to our producers. If I was to ask Commissioner Johnson how many feed dealers we have in the state of North Dakota, he would not be able to give me an answer. However, if I went to the Department of Health and asked how many barbers are licensed in the State of North Dakota, I would get an answer. I think there is a disparity there that we need to address.

I visited with our district representatives and senators at the state level. I have visited with the state veterinarians from both North and South Dakota, and also members of the Stockmen's Association, and different opportunities, hoping to address this problem at the state level. However, in view of the recent events that have occurred, I imagine this is going to be more of a Federal mandate than that we are able to keep it at the state level.

Our duty now with the current BSE case is to be sure and protect the industry by use of sound scientific evidence to prevent further exposure to our cattle population, and instill a level of confidence to the consumer that assures them of the safety of our products.

The events of the past 2 weeks have put an urgency to the proposals being discussed in the livestock industry. Consumer confidence and food safety issues that we previously have been comfortable with have been brought into question. Our response to these concerns will determine the future of our industry, and ultimately, the future of agriculture.

Fortunately we do have some precedence to use in the form of the successful eradication programs for diseases such as Brucellosis and TB. At the time, these programs were also met with resistance from certain sectors of the animal industry. Identification and testing were paramount to the success of these programs, however, producer compliance was at times compromised and hindering the process. Ultimately, the programs worked and the industry has enjoyed the benefits of the integrity of our products.

The current program for eradication of scrapie in sheep and goats is another model we can use to plan for the challenges confronting us with BSE. At the start of the program there was some producer reluctance for the identification process. However, with time and education, our producers now can see results that, coupled with the technology of DNA, which it was alluded to earlier, and I strongly believe that we need to continue research along those lines to develop testing of live animals, gives us solid ground to move forward toward the goal of eradication of BSE in North America.

Thank you.

Senator CONRAD. Thank you very much. Just excellent testimony. I am going to come back to a point you made in a moment.

I would like to recap a number of important statistics here for the benefit of the news media people who are here, and others that might be interested.

What we have learned here today is we have got an overall industry in terms of cattle sales value of $25 billion a year. $3.6 billion of that are exports. It is about 15 percent of the total. I believe we have, in overall terms, when more broadly defined, when you look at all the elements of the industry—you look at feed, you look at hides, you look, at more broadly defined, the industry, itself, it is a $100 billion industry in total. I think we have heard that there is consensus on those numbers.

I am told that we have about a hundred-million head in this country.

Jeff, is that your understanding?

Mr. DAHL. Little more than that, but that is fine.

Senator CONRAD. About a hundred-million head. We slaughter about 36 million head per year; is that approximately correct? How many head do we have in North Dakota?

Mr. DAHL. 1.2 million.

Senator CONRAD. About 1.2 million head in North Dakota. So that gives us kind of a rough understanding.

I asked the previous panel members, and I would like to go to each of you and ask you, as well, I have recommended five separate items.

First of all, that live-cattle imports, that the Secretary was considering allowing, be prevented. Let me just go down the line.

Jeff, would you agree with that?

Mr. DAHL. Absolutely.

Senator CONRAD. Larry?

Dr. SCHULER. Yes,.

Senator CONRAD. Terry, would you agree with that?

Mr. DUPPONG. Yes.

Senator CONRAD. Doctor?

Dr. GALBREATH. Yes.

Senator CONRAD. Second, I have called on USDA, in a letter to the Secretary, to review the previous decision to allow boxed beef from Canada in, until we more clearly know what the source of those products are.

Jeff, would you agree with that position?

Mr. DAHL. If we say that we are basing everything on science, and we say that the causative agent for BSE has never been found in the muscle cuts, blood or milk, and we realize if—for our export markets out of this country, we use protection practices all the time, and Canadian is no exception, that they will do the same to us as we do to them, basically. It is tough to say let's slam the border completely shut, but, however, let me followup on that with a couple points. Canada—and I think Larry has got some more information on this—is closing the border to all beef products from the U.S., including meat, and that is not based on science, that is a protectionist attitude. So if they are doing that, I think they are shooting themselves in the foot. Will closing the border to Canadian meat coming down here help stabilize the market? I think it would. So in the end, I am in favor of it.

Senator CONRAD. Larry?

Dr. SCHULER. Yeah, I would agree, and I agree with Jeff it has to be science-based. As it is now, we are in the middle of an investigation of a BSE case. As you said, we don't know clearly what the results of that investigation are going to punch out, so at least continue the ban until the investigation is complete, so we know the source of feed and the source of animals.

Senator CONRAD. I think that is clearly a prudent measure.

Dr. SCHULER. As Jeff mentioned, I did download from the Canadian Inspection Agency website the restrictions on imports. It does include all live animals, all live ruminants and genetics, and ruminant-derived products, including ruminant animal beef.

Senator CONRAD. That is pretty clear.

Terry?

Mr. DUPPONG. Yeah, I would agree.

Senator CONRAD. Doctor?

Dr. GALBREATH. I would provisionally agree, kind of the same information that Dr. Schuler and Jeff previewed with.

Senator CONRAD. That is, it ought to be science-based?

Dr. GALBREATH. You need to have it science-based. We need to know that there is a certain age restriction here, and also we need to know about the spinal cord ingredients that may or may not be in that boxed meat, under those provisions. And I think we have to the remember——

Senator CONRAD. It should be on a provisional basis?

Dr. GALBREATH. Exactly. Because the BSE right now is a United States issue, but it is also a North America issue, and we need to remember that the border works both directions.

Senator CONRAD. A national ID system that the Secretary has ordered implemented immediately ought to be federally funded. A Federal mandate ought to be federally funded.

Do you agree with that, Jeff?

Mr. DAHL. Yes.

Dr. SCHULER. Yes.

Mr. DUPPONG. I agree. I don't know how to get it done, but I agree.

Senator CONRAD. Dr. Galbreath?

Dr. GALBREATH. Here, again, I think it should be federally funded, but I do think there should be some producer cooperation, because there is the opportunity for the producers to realize some additional benefit from having individual identification on their animals, whether it be traceback to them through breeding stock, or if it is the additional value of the hides because branding may not be needed any longer if this is implemented. The more important thing that comes to mind for our practice area is if these animals are individually identified, we do have the capability of getting additional carcass data back for our producers, as opposed to no identification at all. I do think——

Senator CONRAD. And that has a value?

Dr. GALBREATH. That has a value. And I think producers will be aware of it, and I think they will be receptive if it is approached properly.

Senator CONRAD. OK. Country-of-origin labeling, that there is a clear connection in terms of the previous position of USDA, that is, on the cost side. If you are going to have a system of livestock iden-

tification, obviously, that leads you to be able to identify country of origin.

Jeff?

Mr. DAHL. I agree, it does, and if you can mesh the two together, it goes a long ways to solving any of the debate that is going on right now.

Senator CONRAD. Larry?

Dr. SCHULER. I agree with country-of-origin labeling. I think some of the rules that have been proposed have been a little cumbersome, and I think we need to develop some different rules.

Mr. DUPPONG. R-CALF would be a supporter of COOL. We did a real good job of getting it into the legislation in the Farm Bill. It is not perfect, but we have to realize as time goes on we have to get going at this as things change every day.

Dr. GALBREATH. This is a unique opportunity to implement COOL restrictions along with the national ID system, so by all means.

Senator CONRAD. Let me go to a fifth point I have made, and it is relatively small in terms of cost, but I think there is a principle involved, and that is those ranchers, those producers who have herds that are affected ought to have a substantial part of their costs covered. That is, these people have a potentially catastrophic financial problem through no fault of their own. Certainly that is the case with respect to the herd in Washington, and that as a matter of principle there ought to be compensation.

Jeff, your reaction?

Mr. DAHL. I agree. There is precedence for both federally and in state on indemnity for cattle that are put down for disease reasons. So I think it is already, the mechanism is already there.

Senator CONRAD. It is in place. It needs to be implemented.

Larry?

Dr. SCHULER. I agree with Jeff. Historically speaking when the other eradication programs, when animals were destroyed because of tuberculosis, for example, those producers were indemnified the value of the animal.

Senator CONRAD. How did it work? Was it a full indemnification?

Dr. SCHULER. Previously, it was a set amount regardless of the value of the animal. In today's world we are dealing with appraised values, yes.

Senator CONRAD. Appraised values? OK.

Terry?

Mr. DUPPONG. I think it would be good, and I think one standpoint is because the people that do have cattle from Canada, we don't want to scrutinize them. We want to give them a tool that will bring it to the forefront to admit they have these cattle to identify them. It is estimated that between 15 and 20 percent of the cattle that have come in through Canada have lost importation tags.

Senator CONRAD. Let me stop you on that, and make sure I understand what you are saying. You are testifying here that from what you have learned, that some significant portion of cattle coming in from Canada have lost their identification tags?

Mr. DUPPONG. Correct.

Senator CONRAD. And how does that occur?

Mr. DUPPONG. It just gets ripped out of the ear, the long fence lines, so I think we need a tool to make these people want to come forward and identify these cattle.

Senator CONRAD. OK. Let me just go back to the matter on Canadian boxed beef. What I have called for and what I wrote the Secretary is I asked her to review the decision to allow boxed beef into this country, in light of our new safeguard measures, and asked the fundamental question: Does Canada have equivalent measures? You know, none of this is going to work if we have got a system but there is all this leakage—you know what I am saying—across the border, and they have got a lesser standard than we do. In light of that, I would ask the question.

Dr. Galbreath, do you know about the Canadian compliance on the feed ban? We have heard a lot of rumors, and there have been some discussed here today, with respect to there not being close evaluation and scrutiny on the ban they have in place. What have you heard? What is your understanding?

Dr. GALBREATH. All I cite is some of the reference studies that were done back in 2002, when they actually did surveys in the United States and Canada for compliance, and basically, FDA—the United States gave a rather glowing report in favor of the compliance; however, if you look at the numbers, you find that certain feed mills and certain feed establishments were inspected, whereas some of the smaller family operations or smaller industry operations were not inspected. So there is a little problem with that right away. Then as you read the numbers, the initial numbers, you find, if my memory serves me correct, about an 8 percent noncompliance either in terms of labeling or actually having the product in their meat and bone meal, and then extrapolate that to the small mills and the small operations that aren't even inspected. There is a potential for some risk. I can't speak for the Canadian sector because I really don't have any information on those.

Senator CONRAD. Do you think that the same standards that apply here ought to apply there?

Dr. GALBREATH. Yes. The ruminant ban that came in in 1997 is a North American ruling, and needs to be addressed both in terms of the Canadian influence and also the United States influence.

Senator CONRAD. Just to repeat, Larry, your understanding is, from what you have drawn down from the Canadian website, is that they have imposed a ban not only on live animals going from our country to theirs, but also on boxed beef?

Dr. SCHULER. That is correct. And there is no 30-month limit. They will accept boxed beef from Canada on less than 30 months of age. There is no mention of a 30 month restriction.

Senator CONRAD. Well, I tell you, to me it is very clear we ought to impose that precise same requirement on them, and on both sides it ought to ultimately be science-based, and maybe we need to bring them to their senses. This cow came from Canada. This was not a U.S. cow, and they have put at risk our entire industry, $25 billion industry just in terms of cattle sales, in terms of the broader effect in this economy, a $100 billion industry. As we know, agriculture is the dominant part of North Dakota's economy. It is the biggest part of our economy. We have about two-thirds of our agricultural income is crop income, about one-third is livestock.

We are talking about a very substantial threat to the economic well-being of our state, and certainly of this industry. And we have got to take the steps to protect our consumers, without question, and to protect our industry, and I hope that message comes from this hearing loud and clear.

I want to thank all of you. We have come to the end of our period for this hearing. I want to thank each of you for testifying, it is certainly valuable to the committee, and I believe the U.S. Senate will benefit from the knowledge that you have imparted through this hearing.

With that, I will adjourn the hearing.

[Whereupon, at 11:55 a.m., the committee was adjourned.]

STATEMENT OF
U.S. SENATOR KENT CONRAD
RANKING DEMOCRAT
COMMITTEE ON THE BUDGET
UNITED STATES SENATE
BISMARCK, ND
January 9, 2004

"MAD COW DISEASE: INDUSTRY IMPACT AND U.S. GOVERNMENT RESPONSE"

The Committee on the Budget of the United States Senate meets this morning to assess the impact of the recent case of mad cow disease and the federal government's response to that incident.

It was just over two weeks ago that the U.S. cattle industry was rocked by the news that a single dairy cow in Washington state had been found with mad cow disease, otherwise known as bovine spongiform encephalopathy, or BSE. The revelation hit our ranchers and feeders like a gut punch, made worse by the fact that consumers were just settling in for the holidays, and cattle producers themselves were just starting to enjoy a long-overdue period of profitability. The ensuing drop in cattle prices, and the subsequent loss of beef exports to nearly 40 countries, were a shock to our cattlemen and our country as a whole.

Fortunately, the situation has stabilized to a degree. The immediate

free-fall in cattle prices has eased, and by all accounts domestic consumer demand for beef remains at the very strong level we saw prior to the December 23rd announcement. And this past week, USDA officials confirmed that the diseased cow had its origin in Canada. Thus, the United States can continue to legitimately claim that we have not yet had a homegrown case of mad cow disease, and we can emphatically reassure consumers, both at home and abroad, that U.S. beef remains healthy and safe.

Also on the positive side, the crisis has served to educate the public on the great importance of the beef industry, not just to rural America, but to our entire economy. Beef is indeed critical to creating jobs and generating income across our entire nation.

This bit of good news is welcome, but the reality remains that we have a lot to do to put the beef industry back on a solid footing. For example, our nearly $3.5 billion export market is still at considerable risk, and we are not likely to get cattle prices back up to their pre-crisis level until we once again open those export markets.

In addition, many questions remain as to the specifics of the mad cow measures that USDA has announced, including their impact on both

producers and consumers.

The mad cow case was a harsh reminder that consumer confidence is a very fragile asset – one that we cannot take for granted, and one that we must continually work to preserve. We can't just react to events, as Europe and Japan did after their mad cow outbreaks, or we'll lose the consumer and see our industry devastated. Europe eventually destroyed nearly 4 million head of cattle, most of them in the United Kingdom, after their mad cow crisis erupted in 1986. We have to be ever-vigilant, anticipate events, and make sure that we have the proper preventative measures in place, so that level of devastation doesn't happen here.

As we know, on December 30, the USDA announced several mad cow safeguard measures designed to maintain consumer confidence. Those steps are summarized in this chart [SEE CHART]. As necessary as these measures might be, they also raise questions regarding the specifics of their implementation.

A case in point is the proposed immediate implementation of a national livestock identification system. Back on October 30, well before the mad cow case surfaced, I wrote a letter, cosigned by 4 of my Senate colleagues, to

the Chairman of the Senate Agriculture Committee, Senator Cochran, asking for a hearing on USDA's then-fledgling plans to develop a livestock ID system. I wanted to know the expected costs and benefits of such a system, whether it would be made mandatory, whether it would be required of imports, how it would relate to the new country-of-origin labeling requirement, and so on.

Now, events have conspired to force the immediate implementation of an ID system. Presumably such a system will be made mandatory, and applied to imported livestock and meat as well. But these basic questions remain unanswered. Neither do we know whether the new ID system will be fully funded. This is critical. The President is scheduled to release his new budget for the coming fiscal year on February 2nd, and I will be examining that budget very closely to see that it includes full funding for the new ID system and related mad cow prevention measures. My concern is that if these costs are not fully funded, then they will be forced on the industry, with our cattlemen footing the bill. I would especially welcome any specific comments from our witnesses today on these points.

Other fundamental questions remain, including the future terms of our

livestock and meat trade with Canada. I have already called on USDA to postpone indefinitely any plans to reopen the border to Canadian live cattle, and to reexamine the earlier decision to allow Canadian meat imports, especially in the wake of our new mad cow safeguard measures, which Canada has adopted only in part.

Our subject this morning is a serious one. We have a lot of work ahead of us over the next several months. We also have a lot at stake. Our ranchers are vital to North Dakota and to our country, and their future livelihood depends on our ability to continually reassure consumers that U.S. beef remains safe.

I want to thank all of our witnesses for agreeing, on rather short notice, to appear today. I ask each witness to please try to summarize your remarks in 10 minutes or less, so that we can maximize the time available for questions and discussion. A copy of your entire prepared statement will be included in the official record for the hearing.

In order to accommodate the schedules of our witnesses, we have grouped their presentations into two panel sessions. We will now begin with the first panel.

Administration:
1101 1st Ave N
P.O. Box 2064
Fargo, ND 58107
701-298-2200 • 1-800-367-9668
Fax: 701-298-2210

State Headquarters:
4023 State St
P.O. Box 2793
Bismarck, ND 58502
701-224-0330 • 1-800-932-8869
Fax: 701-224-9485

North Dakota Farm Bureau

www.ndfb.org

TESTIMONY OF NORTH DAKOTA FARM BUREAU
TO THE
U.S. SENATE BUDGET COMMITTEE
ON
BOVINE SPONGIFORM ENCEPHALOPATHY

Presented by Eric Aasmundstad, President
North Dakota Farm Bureau
January 9, 2004

Good morning, my name is Eric Aasmundstad. I am representing the 26,000 members of North Dakota Farm Bureau. We are pleased to have the opportunity to present testimony on the issue of Bovine Spongiform Encephalopathy (BSE).

North Dakota Farm Bureau is very concerned that the USDA-APHIS proposed rules to allow the importation of Canadian cattle into the United States are not stringent enough to prevent other BSE incidents from occurring in this country. We believe that all importation of bovine animals from Canada should be suspended until the current investigation regarding the Washington state animal is completed.

The Office International des Epizooties (OIE) recommends that the ban on feeding of ruminant protein to ruminants should be in place for seven years to classify a country or region as a minimal-risk area for BSE. This recommendation is recognized by the World Trade Organization as an international recommendation for animal disease control. Canada has not had a ban in place for that length of time. A case of BSE verified in Canada less than one year ago and the animal found in the United States with BSE originated in Canada. We submit that Canada is not a minimal-risk country and therefore bovine animals should not be eligible for import into the United States.

There are rumors circulating that a feed mill in Alberta has been including animal protein in ruminant feeds as recently as the past year. We cannot substantiate that and certainly hope that it is untrue. But until we can disprove or substantiate this rumor we must be careful. We must error on the side of caution to protect our beef industry. We simply cannot risk exposing our beef industry to the injury suffered by Canadian beef producers.

We appreciate Canada's efforts to minimize the risk of BSE. They have done an exemplary job of identifying , isolating and preventing the spread of this disease. Still, the discovery of a BSE-infected cow in the United States of Canadian origin proves that a risk, however small, exists. The devastation the U.S. livestock market has experienced because of this discovery cannot and must not be ignored. U.S. producers are not willing to risk further harm by allowing the import of Canadian bovine animals.

We support animal identification from the standpoint of food safety. Being able to quickly trace where and when an animal may have contracted a disease and being able to identify other suspect animals quickly will provide a safer, healthier food supply.

Implementation of an animal identification program must have producer safeguards to be readily accepted. The program cannot simply be a mechanism to pass all liability back to the producer. Once the original owner sells or relinquishes control of the animal, the owner's liability must also be removed.

The identification program must not force the costs of implementation, administration and/or regulation entirely on the producer. The expense of identification devices, whatever they may be, cannot be borne totally of the producer, either. Consumers as well as producers benefit from this program and we must all bear a portion of the costs.

The authors of the proposed Animal Identification Plan left a small window of opportunity for other types of identification. They mentioned tattoos but provided no details. We believe tattoos, various types of brands, etc. could be used by the original owner to identify the animals. Until more is known we would reserve further comments at this time. However, we are generally supportive of the concept.

We support Country Of Origin Labeling (COOL). This may not be a food safety issue in and of itself. But if an infectious outbreak occurs, we will be able to more readily identify where that product originated. COOL is a consumer issue and as such will provide broader consumer confidence,

especially in conjunction with measures being taken to assure food health and safety. Once again, I must reiterate that it cannot affect only producers but packers as well.

We are very appreciative of the USDA-APHIS's efforts in responding to this crisis. They have done an exceptional job of reassuring the public that control measures are in place and working. The agency and the media are to be commended for projecting a positive attitude and bolstering consumer confidence in the safety and wholesomeness of our meat supply.

We also want to thank Senator Conrad for arranging this hearing and for his diligence in this matter.

North Dakota Farmers Union
PO Box 2136 • 1415 12th Ave SE • Jamestown ND 58401
701-252-2340 • 800-366-NDFU
FAX: 701-252-6584
WEBSITE: www.ndfu.org
E-MAIL: ndfu@ndfu.org

Testimony of Robert Carlson

President of North Dakota Farmers Union

on

BSE

Bismarck, North Dakota

Friday, January 9, 2004

Senator Kent Conrad

On behalf of North Dakota's farm and ranch families, thank you for taking time to gather comments about one of the most important issues of the day. BSE, commonly and unfortunately known as mad cow disease affects a lot more than North Dakota's livestock industry. It affects every consumer in this nation and it affects our export markets.

Not coincidentally, country-of-origin Labeling is quickly gaining new support from across the nation and more attention from urban media. This is the silver lining that follows the storm.

USDA is at a crossroads today. Is this federal department, originally established by President Lincoln, to serve the interests of farmers, ranchers and consumers? Or is it to serve the interests of food processors and retailers?

Here is a great example. When we, as consumers, buy beef products, we want to see the USDA inspected stamp. We trust this stamp. We trust USDA to monitor the safety and quality of our food products. Few of us have the benefit of buying all of our food at farmers' markets. I wonder how many consumers equate "USDA-inspected" to U.S. grown and processed? I wonder how many consumers believe that their specific package of hamburger was inspected because it carries a USDA label?

Please let me clarify. Stamps of "USDA-inspected" or "USDA-graded" do not mean every steak in your local grocery store's meat case has been carefully examined by a USDA employee. "USDA-inspected" does not mean the ground beef used to make a fast food hamburger came from a ranch in Montana. "USDA-inspected" labels are applied to meat products that are imported from other countries, to beef products that blend U.S. and imported beef together, and to beef products that are solely of U.S. origin. How is a consumer to know the difference?

USDA inspectors conduct random spot checks of beef products. Some of you will remember the late Bill Lehman, a USDA inspector who worked the port of entry at Sweetgrass, Montana.

Lehman made headlines when he said entire truckloads of beef entered the U.S. with little more than a cursory inspection. Lehman felt pressured to be less aggressive with inspections due to rade provisions.

In is own words, Lehman said, "I merely walk to the back of the truck. That's all I'm allowed to do. Whether there's boxed meat or carcasses in the truck, I can't touch the boxes. I can't open the boxes. I can't walk into the truck. I can only look at what is visible in the back of the trailer. I've just inspected over 80,000 pounds of meat on two trucks. I just stamped their paperwork 'USDA Inspected and Passed' in 45 seconds."

Because of World Trade Organization commitments, the U.S. operates under an "equivalency" arrangement with other nations when it comes to meat. USDA has the power to declare another nation's safety standards as equivalent to American standards. Does this mean USDA officials actually inspect all foreign meat processing and storage facilities? Don't count on it. On average, USDA visits a foreign plant once every three to five years. Since 1995, USDA's Food and Safety Inspection Service has declared the meat inspection systems of 43 nations to be equivalent to America's. That said, of the 37 plants in Mexico authorized to export to the U.S. In 1999, ten were inspected and five were deemed "unacceptable" by USDA and decertified. The other 27 plants were not inspected. One has to take the "USDA-inspected" stamp on good faith and little proof.

USDA has blatantly resisted implementing country-of-origin labeling, or COOL for short. COOL has received solid support from livestock producers and from farm organizations. Consumers are equally supportive of COOL. Why, then, is USDA and the Bush Administration trying to kill COOL? Money. Despite the voices of thousands asking for COOL, money talks louder. Meat packers don't want consumers to make their buying choices based on where beef really comes from. Ignorance in a consumer adds up to profits for a meat packer. These meat packers carry a lot of clout thanks to their profits.

In recent months, USDA and the Food and Drug Administration have been quick to promote their detective work in tracking down problems with food products. FDA was able to trace green

onions contaminated with Hepatitis A to Mexico. FDA's paper chase was triggered because three people died and hundreds became sick after eating at a Mexican-style restaurant. It took USDA more than a few days to discover that the first case of BSE in the U.S. involved a cow imported from Canada. It seems to me USDA should have welcomed country-of-origin labeling. Imagine how much quicker and accurately USDA could have put consumers and producers at ease if COOL were already in place.

Farmers Union members have been tireless champions for country-of-origin labeling. As I see it, COOL and BSE ought to be discussion topics of equal importance and addressed at the same time. The livestock futures market took the expected nosedive in the last week of 2003 due to one cow being diagnosed with BSE. One cow that, ironically, was imported from Canada. It was a bitter end to what had been a year of economic recovery for U.S. livestock producers.

Last May, a BSE-positive cow was discovered in Canada. We saw what a single case of BSE did to Canadian producers. USDA responded by closing the border to live cattle and boxed beef imports from Canada. Senator, I appreciate your efforts to pressure USDA not to be too eager to reopen the border. Again, the question that comes to mind is whether USDA is working for interests of farm and ranch families and consumers, or for meat packers and huge retail grocery stores.

In addition to measures recently initiated by USDA and the Food and Drug Administration, we believe the following steps are necessary to ensure consumer confidence in the safety of U.S. beef and beef products as well as to stabilize the domestic and export markets and minimize any economic damage resulting from this unfortunate incident.

• The U.S. should immediately ban the processing, blending and shipment of meat from any animal that has been tested for BSE, until the test results are returned. This will help further ensure that any potentially infected beef products do not enter the marketplace resulting in further losses of consumer confidence and costly product recalls.

• USDA should suspend its current rule making process which was initiated to establish the regu-

lations governing the resumption of live cattle imports from Canada. Simple prudence dictates that the first Canadian BSE incident was not isolated and that a much more concerted effort must be put in place to prevent further expansion of the disease into the U.S. production and market system.

• USDA should rescind its prior rules and regulations governing the importation of beef products from Canada. Because the full extent of the disease in Canada is now uncertain and it is virtually impossible to provide an adequate inspection of all Canadian beef export products to ascertain their safety, this action is necessary.

• The Bush Administration should rapidly pursue the finalization of reasonable, cost efficient and workable rules for the implementation of mandatory country-of-origin labeling and seek congressional actions supporting an expedited schedule for its implementation rather than encourage further delay as has been the case. Mandatory country-of-origin labeling will help restore any loss of consumer confidence in our food safety protection system by providing additional information to our domestic and foreign customers while improving the traceability of products through the food chain.

Frankly, Senator Conrad, Farmers Union members are frustrated with the U.S. House, which voted December 8 to delay the implementation of mandatory country-of-origin labeling for two years. I wonder if lawmakers and USDA have forgotten who their real constituents truly are. We are hopeful the U.S. Senate takes a more thoughtful approach to COOL when it resumes work on the omnibus appropriations bill later this month.

• The Bush administration and Congress should support emergency economic assistance for producers who suffer economic and market losses as a result of the BSE incident. Without a commitment of federal assistance, many beef producers and the rural communities which rely upon them are likely to suffer irreparable damage as a result of a problem beyond their control.

• Our nation's livestock industry must embrace a mandatory animal identification program that spans the food chain from producer to consumer. This program is integral to homeland security. As such, we ought to use the resources of the federal government to assist producers in implementing such an identification program. Clearly, this type of tracking program may be subject to abuse. Meat packers might try to use the information to further manipulate market prices. We must restrict access to this data base to ensure it serves the interest of producers and consumers. Here are a few specific concerns about a mandatory animal identification program.

Liability provisions: Producers should not be made scape-goats for every food-contaminated recall of products. For example, a cow processed with e-coli in its digestive system does not itself contaminate the meat. The meat becomes contaminated during processing. Packers and processers could try to escape liability by stating the owner of the cow is at fault.

Program cost: Considering that the Secretary of Homeland Security has stated the U.S. needs mandatory animal identification to combat terrorism – along with concerns about animal health and food safety – it only makes sense that the federal government pay for creating and maintaining the database and compensate producers for costs of implementing animal identification.

County-of-origin labeling: USDA ought to require USDA to use this system to implement country-of-origin labeling. This would reduce the costs of COOL and would provide one seamless system.

Use of proprietary information: Any animal identification program should be governed by clear limits as to how the information may be used, and by whom. This information should not be used by packers to affect prices paid for livestock, nor should it be given out to telemarketers or made available to the public. One concept calls for restricting this information to public officials only, for purposes of tracing animal or health diseases, with the exception that country-of-origin labeling follow through to consumers.

Database control: This information must be kept and controlled by the government, and not subcontracted out to new or established private enterprises.

Farmers Union stands ready to provide any assistance to implement these initiatives which we believe will be useful in restoring our nation's reputation as a supplier of high-quality products.

North Dakota
STOCKMEN'S ASSOCIATION
407 SOUTH SECOND STREET
BISMARCK, NORTH DAKOTA 58504
Ph: (701) 223-2522
Fax: (701) 223-2587
e-mail: ndsa@ndstockmen.org
www.ndstockmen.org

Comments to Senator Kent Conrad

By Jeff Dahl, North Dakota Stockmen's Association President
North Dakota State Capitol Building
Friday, January 8, 2004

Thank you, Sen. Conrad, for the opportunity to provide you with our comments today. Let me start by thanking you on behalf of the North Dakota Stockmen's Association for the factual, positive statements you have made on behalf of the beef industry about the Bovine Spongiform Encephalopathy (BSE) situation over the last couple of weeks. It appears that this situation is beginning to stabilize, as is usually the case when calm thinking prevails. The BSE issue does present some problems that need to be addressed. With your permission, I would like to touch on them before I discuss our budgetary concerns, as they would require government action:

Industry Issues

1. It is our belief that the expanded limits on cattle-futures contracts need to be removed. The expanded limits resulted in a knee-jerk reaction that cost cattle producers about 20 percent in equity in five days. If the original $1.50 limit had been maintained, it would have taken 10 days of limit-down to reach the same level. In this case, the amount of information gathered in those five extra days would have done a lot to alleviate concerns in the market. We feel that government involvement may be needed to accomplish the removal of the expanded limits.

2. On the issue of trade, the NDSA would like to see that any proposed free (fair) trade agreements are delayed and that the government and the livestock industry aggressively pursue resumption of trade with our international customers. The NDSA also seeks to delay any implementation of live-cattle imports from Canada. In regard to BSE specifically, the NDSA feels that USDA-APHIS should take a pro-active stance by requiring any country that wants to trade with the United States to have in place a similar feed ban and BSE surveillance program.

3. Country-of-origin labeling (COOL) appears to be the major sticking point in the passage of the Omnibus Appropriations Package. As we discussed earlier, our members support COOL. At the same time, they realize that COOL needs to be implemented in the least-cost manner for producers. When we visited last, we proposed that one of the ways to implement COOL at a very low cost – or whatever the cost is to do a rule interpretation change – is to remove cattle from the J-list and change the interpretation of beef's "final purchaser" as the retail customer, rather than the importer. We have concerns about how the existing law will be implemented.

Budgetary Issues

In regard to budgetary issues, the NDSA would like to address three items that deal with food safety and agricultural programs. For decades, North Dakota has produced leaders – people in the forefront with ideas that

North Dakota
STOCKMEN'S ASSOCIATION
407 SOUTH SECOND STREET
BISMARCK, NORTH DAKOTA 58504
Ph: (701) 223-2522
Fax: (701) 223-2587
e-mail: ndsa@ndstockmen.org
www.ndstockmen.org

have advanced our industry. As you'll see, there are projects in the development stage that, if properly funded, could accelerate the results that are needed not only in this country but across the world.

1. We urge that funding be provided to USDA for research to find a reliable test for BSE that can be conducted without having to destroy the animals. We would also like funding to be provided to do genetic research to determine if there are cattle that are genetically resistant to the disease, much like there are sheep that are resistant to scrapie. The Beef Systems Centers of Excellence is a project underway here in the state that, if properly funded, would go a long way toward developing economic opportunities in North Dakota and would also be able to do research to address some industry priorities, such as alternative rendering procedures, other food safety issues, like *E. coli,* and new product development. We recommend consulting with Dr. Ken Odde, North Dakota State University Animal and Range Science Department chairman, about what level of funding the Beef Systems Center of Excellence needs to get off the ground and to get working on these important issues.

2. The NDSA feels that the National Animal Identification Program needs to be implemented as soon as possible and, since it is a government-mandated program, the government should provide the majority of the funding. The proposed budget of the draft ID plan calls for $70 million in the second year of the program. However, if implementation of this program is to be accelerated, $100 million will be needed to be implemented properly. The NDSA had the foresight three years ago to see the benefits of this program and supported legislation that was passed addressing animal identification. Pilot projects need to be instituted for the National Animal Identification Program to work out problems with the program on a small scale before it is mandated on a national level and fixing problems is much more difficult. North Dakota is in the position to run a pilot project. Because producers will bear some of the cost of the ID program and because the technology it employs is capable of managing multiple databases, we recommend that duplicate government-mandated programs be eliminated. Examples might be the brucellosis and back-tag programs and health certificates for interstate movement. Cattlemen are willing to share information to keep the U.S. and world food supply the safest around the globe, but are concerned about keeping their business records confidential. We urge that safeguards be put in place to protect the integrity of their records.

3. Finally, the NDSA is wary about the Senate reopening the Omnibus Appropriations Bill for fear of losing drought provisions and funding for food safety and rural development programs. Most of North Dakota went into this winter in a very seriously dry condition. If the drought continues into next spring and summer, producers will need help to feed their livestock, and the necessary funding needs to be available in a timely manner to do the most good.

In closing, thank you again for giving us this opportunity to provide comments today. If the NDSA can be of any help in the future, please contact us.

Roger Johnson
Agriculture Commissioner
www.agdepartment.com

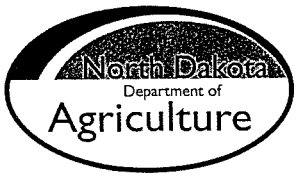

Phone (701) 328-2231
Toll Free (800) 242-7535
Fax (701) 328-4567

600 E Boulevard Ave., Dept. 602
Bismarck, ND 58505-0020

Testimony of
Larry A. Schuler DVM
State Veterinarian
North Dakota Department of Agriculture
State Board of Animal Health
On

BSE and Related Issues

Hearing held by
US Senator Kent Conrad
Pioneer Room of the North Dakota State Capital
Bismarck, North Dakota
January 9, 2004
10:00 AM

Good Morning Senator Conrad. I am Larry Schuler, the state veterinarian in North Dakota I am very pleased to be with you today to discuss the recent case of Bovine Spongiform Encephalopathy (BSE) in the United States and issues related to prevention of new cases and further protection of the animal and public health of this country.

Safety of US Beef

We would like to begin our comments by saying that we believe that the US beef supply is safe. There is very little risk to the beef consuming public. The firewalls that the United States has erected in the past are very effective and the 2001 Harvard University Center for Risk Assessment report says:

> Only a small amount of potentially dangerous tissues would reach the human food supply and be available for possible human consumption. We express the amount of infectivity in terms of cattle oral ID50s for the purpose of quantifying both animal and human exposure to this agent. A cattle oral ID50 is the amount of infectious tissue that would, on average, cause 50% of exposed cattle to develop BSE. The relationship between human exposure quantified in terms of cattle oral ID50s and likelihood of human disease is unknown, but European authorities suggest that the cattle disease may be 10 to 100,000 times less virulent in humans (SSC, 1999, SSC, 2000a). In the entire 20 year

> period following the import of ten BSE-infected cattle, the mean estimate for the amount of infectivity potentially available for human exposure is 35 cattle oral ID50s. The greatest sources of infectivity include consumption of cattle brain, spinal cord, and meat derived from advanced meat recovery systems. Some potential exposure would result from the presence of spinal cord in certain bone-in cuts of beef, like T-bone steaks, and consumption of cattle intestines. Potential human exposure resulting from spontaneous disease or cross-species transmission of scrapie are predicted to be less than 100 cattle oral ID50s over 20 years.
>
> Even in an extreme case, which we characterize using the 95th percentile of the output distribution from the simulation, the import of ten animals leads to only 11 new cases of BSE over twenty years. The 95th percentile value for potential human exposure is 170 cattle oral ID50s over 20 years, approximately five times the mean value. These predictions can be compared with the experience in the United Kingdom, where it is estimated that there were nearly one million infected animals and it is likely millions of cattle oral ID50s available for potential human exposure.

In layman's terms, the 2001 Harvard University Center for Risk Assessment report says that if BSE was imported into the United States, the existing control measures would eliminate the disease within 20 years and that during this time human exposure would be extremely small.

We can use the United Kingdom as an example of how BSE behaves as a zoonotic disease in a population. Historically, BSE has had the greatest impact on the animal and livestock populations of that country. At the peak of the BSE epidemic, the UK was reporting approximately 1000 cases of BSE in cattle per week. At the beginning of the outbreak there were no control measures to prevent the introduction of the BSE agent into the human food supply. However, to date, there have been only 139 cases of variant Creutzfeld Jakob Disease (vCJD) reported in that country. The human exposure in the United States would be exponentially smaller than it was in the UK with the controls measures that are currently in place.

Reaction to USDA Response

We support the steps that USDA has taken to date to respond to the case of BSE in the United States. A diagnosis was made quickly and a rapid response is being mounted. USDA, with the cooperation of the State of Washington, has done what is necessary to control the disease and to prevent the movement of animals out of affected herds.

We support the additional safeguards announced on December 30, 2003 by Agriculture Secretary Ann M. Veneman to bolster the U.S. protection systems against BSE and further protect public health. Specifically, USDA announced the following actions:

> *Downer Animals.* Effectively immediately, USDA will ban all downer cattle from the human food chain. USDA will continue its BSE surveillance program.
>
> *Product Holding.* USDA Food Safety and Inspection Service inspectors will no longer mark cattle tested for BSE as "inspected and passed" until confirmation is received that

the animals have, in fact, tested negative for BSE. This new policy will be in the form of an interpretive rule that will be published in the Federal Register.

Specified Risk Material. Effective immediately upon publication in the Federal Register, USDA will enhance its regulations by declaring as specified risk materials skull, brain, trigeminal ganglia, eyes, vertebral column, spinal cord and dorsal root ganglia of cattle over 30 months of age and the small intestine of cattle of all ages, thus prohibiting their use in the human food supply. Tonsils from all cattle are already considered inedible and therefore do not enter the food supply. These enhancements are consistent with the actions taken by Canada after the discovery of BSE in May.

In an interim final rule, FSIS will require federally inspected establishments that slaughter cattle to develop, implement, and maintain procedures to remove, segregate, and dispose of these specified risk materials so that they cannot enter the food chain. Plants must also make that information readily available for review by FSIS inspection personnel. FSIS has also developed procedures for verifying the approximate age of cattle that are slaughtered in official establishments. State inspected plants must have equivalent procedures in place.

Advanced Meat Recovery. AMR is an industrial technology that removes muscle tissue from the bone of beef carcasses under high pressure without incorporating bone material. AMR product can be labeled as "meat." FSIS has previously had regulations in place that prohibit spinal cord from being included in products labeled as "meat." The regulation, effective upon publication in the Federal Register, expands that prohibition to include dorsal root ganglia, clusters of nerve cells connected to the spinal cord along the vertebrae column, in addition to spinal cord tissue. Like spinal cord, the dorsal root ganglia may also contain BSE infectivity if the animal is infected. In addition, because the vertebral column and skull in cattle 30 months and older will be considered inedible, it cannot be used for AMR.

Air-Injection Stunning. To ensure that portions of the brain are not dislocated into the tissues of the carcass as a consequence of humanely stunning cattle during the slaughter process, FSIS is issuing a regulation to ban the practice of air-injection stunning.

Mechanically Separated Meat. USDA will prohibit use of mechanically separated meat in human food.

We are concerned that perhaps some of these steps do not go far enough, and we will address those issues later.

We (i.e. state officials) feel that we have been "left out of the loop" with regards to information regarding the BSE case and the subsequent investigation. Our first knowledge of the BSE case in Washington was when we heard it on CNN. We have subsequently received virtually all of our information from the Technical Briefings that USDA provides for the news media. This leaves state officials at a disadvantage when it comes to dealing with local concerns and questions.

USDA has for a long time spoken to state officials as partners. Many times in this situation, however, we have felt more like spectators than partners.

Priority Issues

Consumer Safety

First and foremost, consumer safety is the primary priority issue that needs to be addressed. As I said earlier, we believe that the US beef supply is safe and that exposure to the beef consuming public is almost zero. However, USDA and its partners need to review the entire beef production system and take the steps necessary to close loopholes that could possibly result in human or animal exposure.

Reestablish Export Markets

Secondly, reestablishment of international trade of US beef should also be a high priority for USDA. Export sale of beef makes up 9 percent of the beef industry sales. The loss of these markets has resulted in a substantial drop in livestock values. The industry can withstand short term market droops, but long terms price drops will be devastating to the industry. This loss will make the difference in the survival of many cattle producers, who prior to this BSE case were anticipating and needed record prices for their animals.

We believe that USDA should respond to the BSE case in Washington in much the same way that Canada responded to their BSE case in a British imported animal in 1993. Basically, the herd in which the infected animal was found should be depopulated and tested for BSE. All animals that are traced out of this herd and all animals that are in the group of 81 other animals that were imported with the infected animal should also be depopulated and tested. Congress should provide the funding necessary to provide for the depopulation, testing and indemnity of the owners. We estimate this may cost $7-10 million, which is a small price to pay for a lost export market in excess of $2.8 billion.

Additionally, we believe that a traceback of Canadian animals imported into the United States should be done. There are an estimated 300,000-400,000 breeding animals in the US that were imported from Canada. This appears to be an insurmountable task. However, we propose that the traceback should be focused on potential cohorts of the two affected Canadian animals that have been identified in the last year. The traceback should focus on cattle over 5 years of age from the provinces of Saskatchewan or Alberta. This would dramatically reduce the number of animals that would need to be found and tested. We are currently reviewing health certificates in the state veterinarian's office to determine the number of animals that meet these criteria in North Dakota. Nevertheless, it will be a major task and would take additional resources.

We also believe that the US should set importation standards that are at least equal to international standards for importation of animals. The recently proposed rule regarding BSE Minimal Risk Regions concerns us because the rule would establish a standard for importation that is less stringent than international standards. Office of International Epizootics (OIE) has

standards for regions to qualify as minimal risk regions in countries where BSE was identified less than 7 years ago. However, a reading of the OIE Standards reveals that, when applied to the present case, Canada fails to meet those standards.

This is where the proposed rule was more lenient than OIE standards. The OIE standard requires that, in countries where BSE was identified less than 7 years ago, there be a feed ban in place for 8 years. Canada's feed ban went into effect in 1997. Therefore, the Canadian feed ban went into effect approximately 6 ½ years ago.

The OIE standard for a Minimal Risk BSE country or zone is quoted below:

> b) the last indigenous *case* of BSE has been reported less than 7 years ago, and the BSE incidence rate, calculated on the basis of indigenous *cases*, has been less than one case per million during each of the last four consecutive 12-month periods within the cattle population over 24 months of age in the country or zone *(Note: For countries with a population of less than one million adult cattle, the maximum allowed incidence should be expressed in cattle-years.)*, and:
>
> i) the ban on feeding ruminants with *meat-and-bone meal* and *greaves* derived from ruminants has been effectively enforced for at least 8 years;

The possibility of reestablishing our beef export markets is very slim when our importation standards are lower than international standards. We have seen the responses of our major trading partners to the single Canadian BSE case and the single US case that was imported from Canada. We are concerned that their animal health officials will maintain the ban unless we remain at least equal to international standards.

We are also concerned about the request made by the US to OIE to lower the international standard for an effective feed ban to 5 years. This creates a great deal of concern because of the possibility that residual ruminant protein feed was fed in some countries for several years after the feed ban went into effect. Asking the OIE to lower their standards for trade purposes should not be our intent. The goal of international standards should be to prevent prion transmission among regions while allowing trade with as little risk as possible.

Another issue with regards to the reestablishment of trade is the ruminant feed ban and potential loopholes in it. The European Union has a Scientific Steering Committee that conducts an assessment of Geographic BSE Risk (GBR). Nations or regions are classified according to the risk level that exists based on risk factors for having BSE. Currently, both the US and Canada are classified as GBR Level II (i.e. unlikely to have BSE, but can not exclude from the potential to have BSE). Based on the formula that the Scientific Steering Committee has set up, Canada will go to a GBR Level III (i.e. likely to have BSE, but not confirmed, or present at a lower level). Based on the number of Canadian imports of live cattle and feed, the US will also go to a GBR Level III. The key to regaining our Level II status will be to establish regulations that break the transmission cycle. The primary means of transmission is through the feeding of ruminant products back to ruminants. Therefore, eliminating ruminant protein from ruminant feed

becomes central to lowering our risk status. There are several actions that should be taken with regards to the ruminant feed ban.

1. As a result of Secretary Veneman's announcement of steps to bolster the US protection system, Specified Risk Materials (SRM) are now required to be removed from cattle over 30 months of age that are slaughtered. Currently, SRM will be allowed to be rendered. We believe these materials should not be allowed to be rendered. Very few rendering plants have dedicated lines for rendering of ruminant products so the potential for cross contamination exists.
2. Poultry litter should not be allowed to be fed to ruminants. Ruminant protein can legally be fed to poultry, and there is a certain amount of spilled feed contained in poultry litter. This leads to exposure of cattle to ruminant protein through the litter as it is fed.
3. Standards for maximum protein levels in tallow should be set. Beef tallow contains a small amount of protein, and the United States does not have specifications as to maximum allowable levels of protein in tallow intended for cattle feed.
4. FDA must expand feed ban compliance inspections. This should be accomplished with the assistance and cooperation of the state animal health official.
5. Border inspections need to be strengthened to prevent the importation of feeds or feed ingredients not complying with the feed ban rule.
6. Other current exclusions from the feed ban also deserve further scientific review. There is considerable debate concerning blood products and plate waste in ruminant feed.

BSE Surveillance

Surveillance for BSE in the United States will have to increase to meet the requirements of our trading partners. We need to consider adopting even more stringent standards with regards to those countries which impose higher, more restrictive surveillance standards on their own domestic industries.

The removal of "downer" animals from slaughter channels has eliminated a source of samples for BSE surveillance. Other creative strategies need to be developed to obtain an adequate and statistically significant number of samples from high risk animals.

Currently, the United States is using immunohistochemistry (IHC) as the standard test for BSE in this country. IHC is costly and time consuming. We urge the use of quicker tests for surveillance purposes. Positive quick tests could then be confirmed with IHC. The approximate cost of doing quick tests (Biorad®, for example) is $15 per test. We would request funding from Congress to support the level of testing that is necessary to satisfy our trading partners and the US consumer.

United States Animal Identification Plan (USAIP)

The USAIP will provide the United States with a system capable of tracing an animal, or group of animals, back to the herd that is the most logical source of a disease of concern as well as tracing potentially exposed animals that were moved out from the subject premises. The long-term goal is to provide information within 48-hours on all animals that came in contact with the subject animal at each premises. Such capability is dependent on how comprehensive the system infrastructure developed to collect and record the movements of animals is.

The USAIP is needed to maintain the economic viability of American animal agriculture. This national plan will enhance disease preparedness by rapidly identifying animals exposed to disease permitting rapid detection, containment, and elimination of disease threats. This is essential to preserving the domestic and international marketability of our nation's animals and animal products. The USAIP will uphold the nation's reputation for having a safe food supply and will promote continued confidence in livestock products.

The USAIP has evolved since 2002 when industry leaders developed the National Food Animal Identification Plan. The USAIP resulted from further advancement of the Work Plan through the efforts of the 2003 National Animal Identification Development Team (NIDT). Established by USDA/APHIS/VS at the request of the United States Animal Health Association, the team is composed of approximately 100 animal and livestock industry professionals representing over 70 associations, organizations, and government agencies.

The USAIP defines the standards and framework for implementing and maintaining a national animal identification system for the United States, and includes a premises numbering system, an individual and group/lot animal number system and standards for radio frequency technology used for animal identification.

Confidentiality of the data remains the producer's greatest concern under this system, and USDA and state officials are exploring appropriate solutions.

Animals entering the United States from other countries should be subject to the same identification procedures as animals already in this country. The Canadian identification program is compatible with the USAIP. The identification devices that are on animals entering the United States should remain on the animals as official devices and not be removed.

The primary source for current information is located at www.usaip.info. This is an interactive website that provides details on the development of the plan as well as specific information directed at the segments of the livestock industry involved in the identification effort.

While preliminary projections for financial requirements have been made, it must be recognized that the plan is still being developed. Initial start-up costs will be different than the costs of a fully operational system in all 50 states and will be directly related to the extent in which animal movements are recorded.

The 2003 draft USAIP was presented at the United States Animal Health Association (USAHA) meeting in October 2003. A resolution (attached) at USAHA accepted the plan as a work in progress and encouraged its further refinement and implementation.

The USAIP Draft Document (attached) contains a projected budget (pages 47-48) for the USAIP. Initial first year start up costs are estimated to be $20 million. The following years have higher costs because more identification devices are applied to animals during those years. We urge Congress to fully fund the USAIP during the startup years and to continue to fund the Identification Program at a maintenance level following that.

Livestock producers are certainly willing to bear a portion of the cost. They believe that the bulk of the cost should be the responsibility of the USDA since these identification devices will replace other ID that is currently being provided by USDA and the nature of the devices will streamline many of USDA's animal health programs and recordkeeping systems.

Maintenance of Identification

Living in a border state has made it is clear to us that animals "leak" out of the trade channels for which they were imported. It is not uncommon to find slaughter animals outside of slaughter channels and feeder animals outside of feeder channels. As a matter of fact, it is not uncommon for identification tags to be removed from feeder cattle prior to resale to improve the market value of the animals. There are currently no restrictions on the removal of identification tags from animals after they are imported into the US.

We believe that it is imperative that regulations be developed that prohibit the removal of official identification from animals. USDA must enact interim emergency regulations prohibiting removal of any official ID from cattle imported from a foreign country. A meaningful penalty must be associated with removal of identification in order to achieve compliance.

Country of Origin Labeling (COOL)

Country of Origin Labeling should be considered with regards to protecting consumer confidence in the US. COOL would provide consumers with at least the *opportunity* to select meat from countries which they perceive as safe. We strongly recommend that COOL be fully implemented in the US so consumers would have more specific knowledge as to the origin of their beef. In the event of another BSE case, consumers would then be able to differentiate product in the marketplace and may feel more confident in their beef purchases. This would arguably lead to a smaller decrease in expected demand for beef, which should serve to decrease the negative price impacts which would certainly follow the discovery of another BSE case.

Laboratory Capacity

With increased surveillance there will also be a need for more laboratory capacity to meet the needs of a BSE surveillance system. We urge Congress to provide adequate funding to build the laboratory infrastructure that is necessary to meet the demands of increased surveillance.

Along those lines, we urge completion of the USDA APHIS-ARS Master Plan for a new facility in Ames, Iowa, to meet BSE surveillance activity needs as well as urgent national needs for research, diagnosis, and product testing related to animal health. The proposed facility will replace outdated and inefficient facilities currently used by the APHIS National Veterinary

Services Laboratories (NVSL), the APHIS Center for Veterinary Biologics (CVB), and the ARS National Animal Disease Center (NADC).

The new facility will address new national and international standards for biocontainment, animal handling, personnel safety and health, quality assurance, and environmental protection. It will consolidate facilities currently dispersed in Ames, thereby increasing efficiency and collaboration, and increase high security laboratory and animal capacity. The new facility will help safeguard the $100 billion livestock, poultry, and companion animal industries, as well as protect against human health threats such as foodborne illness and zoonotic disease.

BSE Prevention through Importation of Live Animals– Reactive vs. Proactive

There is a major disparity in USDA's approach to the prevention of the introduction of a disease into the US between BSE and other foreign animal diseases. With most foreign animal diseases, USDA is proactive (i.e. We do not allow the importation of animals from a country until adequate surveillance has been done to prove that the disease is not present within that country.). In the case of BSE, USDA is reactive (i.e. the US will trade with a country until a case of BSE is identified.). This is very disconcerting when you consider the long incubation period of BSE and that BSE is a public health issue as well as an animal health issue.

We believe that this places the US at risk of importing BSE since USDA is reacting after the fact to BSE cases reported in the various countries that trade with the US. We urge USDA to clearly define proactive standards for trade with regards to BSE.

Advanced Meat Recovery (AMR)

Advance Meat Recovery (AMR) systems are notorious for containing nervous tissue derived from the dorsal root ganglia (a specified risk material) in the final product. In the worst case scenario of the Harvard Risk Assessment, approximately one-half of the infectious doses (ID 50) to which humans would be exposed would be derived from AMR products.

We strongly urge the prohibition of AMR systems when slaughtering animals or, at least, extensive testing should be required for determining the presence of nerve tissue in the AMR meats.

MASDA and NASDA Resolution

In July 2003, the Midwestern Association of State Departments of Agriculture (MASDA) approved a resolution concerning BSE. We helped draft and fully support that resolution, which is attached.

The MASDA resolution was forwarded to the National Association of State Departments of Agriculture (NASDA) and was adopted with minor changes (attached).

Conclusion

Senator Conrad, thank you for the opportunity to provide this information.

We urge aggressive activity by USDA to reestablish our beef export markets.

We urge the Food and Drug Administration (FDA) to reevaluate the ruminant feed ban and ask them to set science based standards for protein levels in tallow.

As I alluded to earlier, the 2001 Harvard University Center for Risk Assessment report concluded that "measures taken by the U.S. government and industry make the U.S. robust against the spread of BSE to animals or humans should it be introduced in this country." However, with the finding of a case in the US, a reevaluation of the BSE prevention strategies is in order and steps should be taken to further assure that all responsible measures have been taken to assure the protection of the animal and public health of this country. Thank you

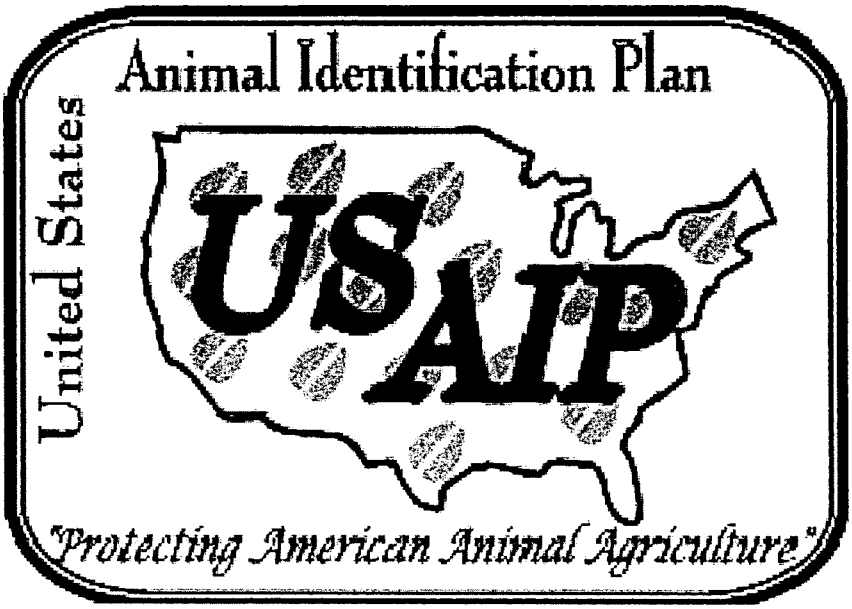

Draft Document
for
2003 USAHA Presentation/Discussion

Version 4.0
September 29, 2003

Developed by:

National Identification Development Team

TABLE OF CONTENTS

	Page
SECTION I:	
EXECUTIVE SUMMARY	5
INTRODUCTION	6
OVERVIEW OF US ANIMAL IDENTIFICATION PLAN	7
SECTION II: COMMUNICATIONS	8
SECTION III: STANDARDS	9
PREMISES IDENTIFICATION	9
NON-PRODUCER PARTICIPANTS	14
ANIMAL IDENTIFICATION:	14
INDIVIDUAL ANIMAL NUMBERS	14
GROUP/LOT NUMBERS	16
IDENTIFICATION DEVICES	17
SECTION IV: INFORMATION SYSTEM	21
PREMISES SYSTEM	22
ANIMAL SYSTEM	23
DATA ACCESS	25
DATA VALIDATION	26
SECTION V: IMPLEMENTATION PLAN	28
IMPLEMENTATION BY SPECIES	
CATTLE	31
SWINE	33
SHEEP	35
Section VI: Governance	38
OVERVIEW AND USAIP OVERSIGHT BOARD	38
STATE AND FEDERAL ROLES/RESPONSIBILITIES	40
NON-PRODUCER PARTICIPANTS	40
PREMISES IDENTIFICATION	41
US ANIMAL IDENTIFICATION NUMBERING SYSTEM	43
OFFICIAL IDENTIFICATION DEVICES	45
ANIMAL IDENTIFICATION REQUIREMENTS	45
PRODUCER IDENTIFICATION RESPONSIBILITIES	46
USAIP BUDGET	47
Appendix	
A. GLOSSARY OF IDENTIFICATION TERMS	50
B. FILE FORMAT DESCRIPTIONS	53
C. PREMISES IDENTIFICATION NUMBER ALLOCATOR	56
D. NON-PRODUCER PARTICIPANT AND USAIN ALLOCATION DATA	62
E. ISO 7064 MOD 37,2 - CALCULATION OF PREMISES ID CHECK DIGIT	64
F. INTERNATIONAL STANDARDS - RADIO FREQUENCY IDENTIFICATION OF ANIMALS	66
G. ERROR HANDLING PROCEDURES	69
H. SECRETARY VENEMAN ....USDA'S ROLE IN PROTECTING U.S. FROM TERRORISM	71
I. NATIONAL IDENTIFICATION DEVELOPMENT TEAM ROSTER	72

EXECUTIVE SUMMARY

Protecting American animal agriculture by safeguarding animal health is vital to the wellbeing of all U. S. citizens. It promotes human health; provides wholesome, reliable, and secure food resources; mitigates national economic threats; and enhances a sustainable environment. Essential to achieving this goal is an efficient and effective animal identification program.

Building upon previously established and successful animal health and animal identification programs involving many animal industries, an industry-state-federal partnership, aided by the National Institute for Animal Agriculture (NIAA), was formed in 2002 to more uniformly coordinate a national animal identification plan. This resulting plan, requested by the United States Animal Health Association (USAHA) and facilitated by USDA's Animal and Plant Health Inspection Service (APHIS), was formulated in 2003 for presentation at the October, 2003 annual meeting of the USAHA. More than 100 animal industry and state-federal government professionals representing more than 70 allied associations/organizations collectively assessed and suggested workable improvements to the plan to meet future U. S. animal identification needs.

Fundamental to controlling any disease threat, foreign or domestic, to the nation's animal resources is to have a system that can identify individual animals or groups, the premises where they are located, and the date of entry to that premises. Further, in order to achieve optimal success in controlling or eradicating an animal health threat, the ability to retrieve that information within 48 hours of confirmation of a disease outbreak and to implement intervention strategies is necessary. The USAIP is focused on utilizing state-of-the-art national and international standards with the best available and practical technologies. It is dynamic and flexible, and will incorporate new and proven technologies as they become available. States' needs in implementing animal identification will receive priority within the uniformity provided by federal oversight.

The USAIP currently supports the following species and/or industries: bison, beef cattle, dairy cattle, swine, sheep, goats, camelids (alpacas and llamas), horses, cervids (deer and elk), poultry (eight species including game birds), and aquaculture (eleven species). Implementation will be in three phases: Phase I involves premises identification; Phase II involves individual or group/lot identification for interstate and intrastate commerce; and Phase III involves retrofitting remaining processing plants and markets and other industry segments with appropriate technology that will enhance our ability to track animals throughout the livestock marketing chain to protect and improve the health of the national herd. Initial implementation will focus on the cattle, swine, and small ruminant industries. In transition, the USAIP recommends that:

- all states have a premises identification system in place by July, 2004; unique, individual or group/lot numbers be available for issuance by February, 2005;
- all cattle, swine, and small ruminants possess individual or group/lot identification for interstate movement by July, 2005;
- all animals of the remaining species/industries identified above be in similar compliance by July, 2006.

These standards will apply to all animals within the represented industries regardless of their intended use as seedstock, commercial, pets or other personal uses.

It is well acknowledged that costs associated with the USAIP will be substantial and that a public/private funding plan is justified. Significant state and federal costs will be incurred in overseeing, maintaining, updating, and improving necessary infrastructure. Continued efforts will be required to seek federal and state financial support for this integral component of safeguarding animal health in protecting American animal agriculture.

INTRODUCTION

The United States Animal Identification Plan defines the standards and framework for implementing a phased-in national animal identification system.

Goal

To achieve a traceback system that can identify all animals and premises potentially exposed to an animal with a Foreign Animal Disease (FAD) within 48 hours after discovery.

Achieving this goal will enhance the efficiency and effectiveness of current animal* health regulatory programs.

* *This Plan currently includes all domestic cattle, bison, swine, sheep, goats, cervids (deer and elk), equine, poultry, game birds, aquaculture, camelids (llamas, alpacas, etc.), ratites (ostriches, emus, etc.).*

The Need for Animal Identification

Maintaining the health and economic viability of US animal agriculture is critical to the industry and to the safety of the U.S. food supply, and, therefore, is the focus of the National Identification Plan. Establishing the requirements for animal identification that provide the necessary infrastructure to monitor animal diseases, to support their control or eradication, and to establish an adequate emergency management response system provides the foundation of the "system" for the national program.

Maintaining the health of the U.S. animal herd is the most urgent issue for the industry and is the focus of the plan. The benefits of a national animal identification system include:

- Enhanced disease control and eradication capabilities for rapid containment of foreign animal disease outbreaks and enhanced ability to respond to biosecurity threats.
- Enables the industry to meet the demands of domestic and international consumers for source-verified products. This ability enables producers to maintain and build market access.
- Mitigation of threats to biosecurity of the food supply, either intentional or unintentional.

OVERVIEW OF US ANIMAL IDENTIFICATION PLAN

Brief History

While the history of efforts to develop a national animal identification plan dates back over three decades, most recently the National Institute for Animal Agriculture (NIAA) created and coordinated the efforts of the National Identification Task Force in 2002. More than 70 national livestock industry organizations were invited to participate on the Task Force.

This Task Force developed the National Identification Work Plan (NIWP). This document was presented and accepted by the United States Animal Health Association (USAHA) in October, 2002 as a guideline to establish a national animal identification system to enhance animal disease monitoring, surveillance, control and eradication in the U.S. USAHA passed a resolution requesting USDA/APHIS to establish a National Animal Identification Development Team that would use the NIWP as a guideline to establish a national plan. The US Animal Identification Plan reflects the work of this ID Development Team.

The USAIP Development Team

To formalize the industry-state-federal partnership, the USAIP Development Team was named in the Spring of 2003. The Team is composed of a Steering Committee and five subcommittees, including: Communications, Governance, Information Technology, Standards and Transition. The ID Team roster is listed in Appendix F.

Time Table - 2003

The Steering Committee and Subcommittees initiated the discussion to advance the 2002 National Identification Plan in early 2003. The following are specific target dates to achieve presentation of the USAIP at the October 2003 USAHA meeting.

- September 2: USAIP Preliminary Draft distributed to Development Team and Animal Health Official Steering Committee
- September 10 - 11: Development Team revises draft document (KC meeting)
- September 29: US Animal Identification Plan distributed electronically (email and posted on website)
- October 1: US Animal Identification Plan distributed to Development Team and Animal Health Officials via mail
- October 14: USAIP Report to USAHA Livestock Identification Committee

The National Institute for Animal Agriculture (NIAA) plans to host an ID INFO Expo 2004 the first part of 2004. This venue will provide the opportunity for stakeholders to have extensive discussions on the USAIP.

II. COMMUNICATIONS

The U.S. Animal Identification Plan (USAIP) must be well-communicated with parties involved in the production and marketing of food animals and livestock. The communication plan will create awareness and understanding of:

- The need for identification
- The value of premises and animal identification to industry stakeholders
- The short and long term plans of the industry to establish a national ID system
- The basic components of a national ID system and the importance of each (Premises ID, Individual ID, Lot ID, ID Devices, etc.)
- Stakeholder requirements

The goal of the communication plan is to prepare and implement a strategy to inform and educate stakeholders on the USAIP and develop needed resources and delivery systems to ensure industry understanding and support.

II. A. Communication Objectives

1. Facilitate information flow among the USAIP development team subcommittees in order to ensure efficient and effective communication.

2. Identify industry segments and stakeholders responsible for making a national identification system successful.

3. Develop communications delivery systems to promote timely, user-friendly formats for stakeholders to access information in the USAIP involving:

    a. Periodic news releases communicating progress of plan development and significant events concerning animal identification.

    b. A public Internet Website to provide updated information with the address of www.usaip.info.

    c. Provision of a "communications coordinator" to ensure that communication systems are as effective and functional as possible.

4. Develop "template" communications tools for various stakeholder segments of the industry. These templates will be species and segment directed and may consist of fact sheets, brochures, videos, CDs, or other media based on the audience being reached.

5. Develop and train "outreach teams" to take the messages of the USAIP to the stakeholders in the industry. These teams will consist of key individuals and groups most appropriate to deliver information and training to stakeholder groups.

III. STANDARDS

To achieve the "48-hour" traceback objective, the movement of individual animals, or "units of animals", must be recorded. Reporting this information to a central database or creating a seamlessly linked local database infrastructure could enhance traceback. Animal agriculture has demonstrated its willingness to adopt the necessary identification system for each species in order to protect the health of the national herd. Industry and government are committed to resolving issues regarding confidentiality and security to protect and improve the health of the national herd. Standards for certain data elements are essential for a successful information system in which data is shared among states and the federal government, as well as being provided or linked through certified commercial service providers. The key data elements requiring standards include:

- A uniform premises identification system
- A uniform, nationally recognizable numbering system for individual animal identification
- A uniform, nationally recognizable numbering system for a group or lot of animals
- A uniform numbering system for Non-producer Participants

Additionally, standards are required for identification devices to ensure minimum performance standards are achieved as well as standards associated with the integration of automated data collection systems. Such standards include:

- Visual identification methods and devices for official use in livestock
- Electronic identification methods and devices for official use in livestock

III.A. Premises Identification

The USAIP 48-hour traceback objective requires that the information system records an animal's or unit of animals' origin and its movement to other locations for its entire life. Such locations are referred to as "premises". Identifying these premises with a single and unique number is essential to trace animals potentially exposed to disease. If more than one premises number is used for the same location, animals subject to contagious disease can go undetected. Therefore, the establishment of a unique location identifier is required by the US Animal Identification Plan.

III.A.1. Definition of a premises

The diversity of the environments in which we manage livestock makes the definition of such locations quite complex. For purposes of the USAIP, the following defines a premises:

> " A premises is an identifiable physical location that, in the judgment of the State Animal Health Official or Area Veterinarian in Charge, and when appropriate in consultation with the affected producer, represents a unique and describable geographic entity (where activity affecting the health and/or traceability of food producing animals may occur) or represents the producer contact location when extensive grazing operations exist."

* A grazing location is a geographic area defined by the producer where his stock resides at some time during their life and where minimal or no facilities or physical structures exist. This area is not easily definable and turnover of stock may occur frequently. If in the judgment of State and Federal animal health officials it does not meet the premises definition it will not be required to have a premises ID assigned. Animal movements will be recorded and maintained at a central location identified with a premises ID number and all movements into commerce will be reported from that premises. A geographic description of grazing locations should be recorded in the state premises system.

Acknowledgment: This premises definition is a result of the efforts of a Working Group established from the Standards Subcommittee. The Standards Subcommittee has not had an opportunity to approve this work and it should not be assumed that this is an accepted standard until the subcommittee has reviewed this recommendation. At the same time, the Standards Subcommittee acknowledges the expertise of the working group and considers it important that this proposed definition be made available for comment by a wider audience.

**Note: Consultation with the State or Federal Animal Health Official is on an as need basis when the localities of the entity warrant additional consideration to ensure the producer's needs are addressed. Decisions on whether multiple premises identification numbers are needed should be based on epidemiologic links and/or the likelihood of disease transmission between the premises. For instance, if an owner has multiple premises, and animals are frequently moved among those premises, then one premises number can be used, and all locations should be associated with that number. However, if a location has animals owned by others moving in and out, a separate premise number should be considered.*

Uniquely assigned premises numbers to all locations in the livestock and poultry production chain, including animal production operations, markets, assembly points, exhibitions, processing plants, etc., will increase the accuracy and efficiency of the identification system. The ability to link the information to a premises is achieved by a unique premises identification number.

Standard: US Premises Identification Number *(revised July 15, 2003)*
The National Premises Identification Number provides a unique number across the entire United States for locations involved in animal agriculture and links that location to the entity that participates in animal production and/or commerce.

The field specification for the National Premises Identification Number is defined below.

US Premises Identification Number			
Field Structure	Type	Example	Comments
7 Character	Alphanumeric	A123R69	Right most character is a check digit[1]

[1] *See Appendix E for the check digit formula*

III. A. 2. Administration of Premises System

The administration and management of the premises system is the responsibility of each state department of agriculture (or as established by the appropriate governing body within the state). They may operate their own system or one developed by a private company, the USDA, or those established through regional alliances. Regardless, the states, utilizing a certified state premises system, have the responsibility to identify premises within the geographic area for which they are responsible. The States will interface or link with the Premises Allocator System, administered by the USDA, to obtain a nationally unique premises number (see Appendix C. Premises Identification Number Allocator).

The following apply to the administration of a premises:

- Premises information shall be kept confidential and only partial data will be available to authorized officials.
- A location will maintain the same Premises Number when sold intact. A historic record providing the previous contact information and the dates that information was associated with the premises must be maintained on the state premises system.
- Production locations that have multiple species must have one unique Premises Identification Number.
- Owners with multiple production units and/or holding units will consult with their State Animal Health Official or Area Veterinarian in Charge to determine if multiple

premises identification numbers are required. Establishing multiple premises identification numbers should be based on epidemiologic links and/or the likelihood of disease transmission among the premises.

- The owner of the premises, or person designated by the owner of the premises, must register their location(s) and must keep the required information current.
- The state will electronically update new and revised premises records to the National Premises Repository as prescribed.

II.A.3. Premises Data Element Standards

The unique premises identification number is the "key" to the National Premises ID Repository and what allows authorized users to access necessary information, in particular the contact person of a premises when an animal health official needs to initiate communication when investigating an animal disease problem. To support traceback functions, communication with individuals responsible for the premises must be made in a timely manner. While the owner of the operation is often the appropriate contact person for the premises, the legal ownership of the premises is not a requirement of the system. Rather, the name of the person on record is the person who is to be contacted when a traceback is performed. The entity that registers the premises determines who the appropriate contact person is. Additional information, such as address, phone, GPS coordinates, etc., provides the ability to establish communication with a production unit/operation where an animal is or has been located.

Establishing information standards is key for the successful integration of the premises identification system. The USDA, APHIS, VS is to provide a centralized National Premises Repository for all premises that each state issues along with the required information for each premises as defined below. This "master" national premises repository provides for the immediate lookup access by authorized users to validate any premises in the country. Such database is designed to be secure, accessible only to authorized users. As well, the database is to be exempt from FOIA (Freedom of Information Act).

The National Premises Repository will be a critical component of the electronic Interstate Certificate of Veterinary Inspection (ICVI) to ensure that animal movements are recorded with the accurate premises number.

Standard: Data Elements for the National Premises Repository

The following chart defines the fields (data elements) that are required by the National Premises Repository.

Data Elements - National Premises Repository

Field Name	Type	Length
US Premises ID Number	Alphanumeric	7
Name of Entity	Alphanumeric	30
Owner or Appropriate Contact Person*	Alphanumeric	30
Street Address	Alphanumeric	30
City	Alphanumeric	20
State	Alpha	2
Zip/Postal Code	Numeric	9
Contact Phone Number	Numeric	15
Operation Type	Character	1
Date Activated	Date (YYYYMMDD)	8
Date Retired	Date (YYYYMMDD)	8
Reason Retired	Character	1

* *The contact person should be the person the animal health official is to communicate with when performing a traceback (as determined by the entity).*

Standard: State/Local Premises Identification Systems

The State Premises system will collect and maintain the information required by the National Premises Repository. In addition, the states will maintain the historic data for 20 years. This will provide Animal Health Officials with the proper contact reference when the current contact person was not associated with the premises during the period being researched in a traceback situation.

Data Elements - State Premises Database

Field Name	Type	Length
US Premises ID Number	Alphanumeric	7
Name of Entity	Alphanumeric	30
Owner or Appropriate Contact Person*	Alphanumeric	30
Street Address	Alphanumeric	30
City	Alphanumeric	20
State	Alpha	2
Zip/Postal Code	Numeric	9
Contact Phone Number	Numeric	15
Operation Type	Character	1
Date Activated	Date (YYYYMMDD)	8
Date Retired	Date (YYYYMMDD)	8
Reason Retired	Character	1
Historic Data**		
Previous Contact Person	Alphanumeric	30
Previous Contact Person Phone	Numeric	15
Previous Contact Person - Start Date	Date (YYYYMMDD)	8
Previous Contact Person - End Date	Date (YYYYMMDD)	8
GPS		
Longitude	Degree/Minutes	
Latitude	Degree/Minutes	
Alternative Phone Numbers **	Numeric	15

* *The contact person should be the person the animal health official is to communicate with when performing a traceback (as determined by the entity).*

** *Requires facility to store multiple records.*

Standard: List Codes

Certain fields are predefined for list standards that will allow the data to be selected and stored consistently. Such list standards are listed below.

List Codes

Field Name	Type / List Options	Length / Stored As
Species	**Character**	**3**
	Bovine (Bison and Cattle)	BOV
	Camelid (Alpaca & Llama)	CAM
	Equine (Horses)*	EQU
	Porcine (Swine)	POR
	Ovine (Sheep)	OVI
	Caprine (Goats)	CAP
	Cervids	CER
	Deer	DEE
	Elk	ELK
	** Equine industry will expand as necessary*	
	Poultry	POU
	Chickens	CHI
	Turkeys	TUR
	Geese	GEE
	Ducks	DUC
	Pheasants	PHE
	Guineas	GUI
	Quail	QUA
	Pigeon	PGN
	Aquaculture	AQU
	Trout	TRO
	Salmon	SAL
	Catfish	CTF
	Tilapia	TIL
	Striped Bass	SBA
	Shrimp	SHR
	Crawfish	CRA
	Oysters	OYS
	Clams	CLM
	Scallops	SLP
	Mussels	MSL

Field Name	Type / List Options	Length / Stored As
Sex	**Character**	**1**
	Male	M
	Female	F
	Neutered/castrated male	C
	Neutered/spayed female	S
	Mixed (used only in groups)	X
Operation Type	**Character**	**1**
	Clinic	C
	Exhibition	E
	Laboratory	L
	Market/Collection Point	M
	Production Unit*	P
	Port of Entry	B
	Quarantine Facility	Q
	Slaughter Plant	S
	Tagging Site	T
	Rendering	R
	Non-producer participants	N
	** Hunt Ranches, etc. included*	
Premises Reason for Retired	**Character**	**1**
	Error (Reported in error)	E
	Developed (Operation terminated resulting from commercial development)	D
	Merged	M
	Split	S

III. B. US Non-producer Participant Numbers

The USAIP provides for the establishment of Non-producer Participants who have authorized responsibilities as defined in the Governance section of this report. These participants may submit information to the designated databases. Data they supply will be associated with their Non-producer Participant Number so proper controls and integrity measures of the data can be maintained. The USDA will establish enrollment/application procedures for Non-producer Participants and will be responsible for the allocation of unique Non-producer Participant Numbers to such entities/individuals.

Standard: US Non-producer Participant Numbers

The Non-producer Participant Number is a unique 7-character field as presented in the following chart.

US Non-producer Participant Numbers			
Field Structure	Type	Example	Comments
7	Alphanumeric	H892345	USDA will allocate unique numbers to approved Non-producer Participants

A US Non-producer Participant number needs to must be obtained from USDA/APHIS before data can be uploaded to the national system. This allows the submitting Non-producer Participant to be contacted in the event of error in the file they submit.

III. C. Animal Identification

Two types or levels of animal ID are necessary to support animal disease management programs: individual animal and "group/lot" identification. Individual animal identification is needed for tracking animals that are destined to be commingled with animals outside of the production system in which they were born as they move through the production chain. While certain traceback functions can be achieved with Premises ID alone it cannot be used to record an individual animal's movement through multiple marketing and commingling points. In this instance, individual animal identification is necessary.

Group/Lot ID can be used in species where groups of animals are assembled from within the same production system and tracking is achieved through recording of group movements and the maintenance of required production record elements. In the event animals identified through Group/Lot ID become commingled with animals outside the production system, individual animal identification becomes necessary. Groups are defined as static or dynamic and described in more detail in the Group/Lot section below. The identification number for units of animals is referred to as "Group/Lot ID".

III.C.1. Individual Animal Numbers

The collective livestock industries agree that a national numbering system is most effective when individual ID is required. However, with several "official" numbering systems in use today, achieving a single national numbering system can only be accomplished through a planned transition. The standard for the single national numbering system should be:

- Compatible with national numbering systems already established in other countries
- Avoid duplication of any existing numbers

Current numbering systems considered official for the interstate movement of livestock include:

- USDA uniform state series code
- Breed registration numbers
- Premises ID used in combination with a unique herd management ID

Additionally, the American Identification Number and the RFID code number in ISO compliant transponders is to be recognized as an official number by an interim rule during a transition period according to the USAIP (see Section VI.E.2.).

The goal of 48-hour traceback, most likely, will require the use of Radio Frequency Identification technology to automate the recording of animal movements. ISO 11784 establishes the unique code of each transponder contained within the 64 bit code as a three digit ISO country code plus 12 numeric characters.

Standard: US Animal Identification Numbering System

To support the successful transition and integration of RFID technology, the US Animal Identification Plan will adopt the ISO code structure as the standard for the country's national animal numbering system (same code structure for RFID codes and visual national numbers).

The US Animal Identification Number (USAIN) will become recognized as an official animal number as set forth in the Governance section of the USAIP and is defined as:

US Animal Identification Number (USAIN)			
Field Structure	Type	Example	Comments
3	Numeric	840	
12	Numeric	123456789012	Start number > 2,000,000,000

Note: Both fields stored and transferred in numeric format.

Note: The format of the American Identification Numbering system is similar to the ISO standard for the RFID code structure, but it does differ. The American Identification Number contains a check digit and its field character specification is alpha numeric. To avoid confusion with the American Identification Numbering System and duplication of those existing numbers, the USAIN will start at 2,000,000,000. Previously allocated American Identification Numbers, but not assigned to a production unit, may be recalled so procedures set forth for the administration of USAIN can be applied for those numbers.

Within each species, it is realized that certain management objectives will require individual identification even if premises ID is adequate for an animal disease program. Genetic programs, for example, require individual identification. When such ID is required, it is recommended that the official US Animal Identification Number be used.

III.C.2. Group/Lot Identification

Group/Lot ID is used in industries where production practices involve management by groups. In such cases, there is no traceback advantage to individual identification. Thus, individual animals will not be identified; instead, groups of animals can be tracked using appropriate group identifiers and production records. A unique and standardized number will be necessary to track groups of animals at the national level in a central database.

An animal production system can use Group/Lot Identification if the producer is able to demonstrate to the satisfaction of state animal health officials that, through group identification and production records, 48-hour traceback can be accomplished to all premises with animals potentially exposed to disease.

Standard: US Group/Lot Identification Numbering System

Group/Lot ID will consist of the National Premises ID of the location where the group was established and a six digit numerical number reflecting the date the group was created. This format will result in a unique number; for example: A2345671003002

US Group/Lot Identification Number			
Field Structure	Type	Example	Comments
7	Alphanumeric	A234567	First 7 characters is the entity's US ~~Premises~~ ID Number
6	Date (MMDDYY)	100302	

Group/Lot ID is an option for any species in which animals move as a group through the production chain and when such identification will meet the requirements of 48-hour traceback. Requirements for Group/Lot ID may vary by species.

III.C.2.1 Group/Lot ID for Swine

Production Records

In addition to the required fields for Group/Lot ID, production records will be necessary for utilization of Group/Lot ID. These records must be kept at the local level for two years after group retirement or "end group". The production records must meet the necessary requirements to internally track all group pig movements and those records must be readily available to USDA if a significant animal health event occurs. The following production information is required to utilize Group/Lot ID:

- Animal additions
  - Source G/L ID(s) or source premise(s)
  - Date entered
  - Number of head
- Removals
  - Removal Date
  - Removal Type (Sales, Transfers, Death)
- Destination
  - G/L ID(s)
  - Premise(s)
- Inventory reconciliation

Static Groups

- Static groups are a definable number of animals that are assembled and maintained for a definable period of time. Animals produced in using all-in/all-out production are a typical example of a static group.
- Static groups remain intact as a group and may move from premises to premises.
- Live animals leaving static groups can be moved to a dynamic group within the same production system or to harvest without individual animal ID.
- Two static groups can be combined to form a new static group if the new group is all-in/all-out; i.e., the group inventory goes to zero and the group is ended.

Dynamic Groups

- Dynamic groups are premises-based groups that exist for an indeterminate amount of time and can have animals move in and out. Animals produced in continuous flow production are a typical example of a dynamic group
- An animal can exist in only one dynamic group in a lifetime without individual ID.
- Live animals leaving dynamic groups can become a static group in the same production system or moved to harvest without individual ID.
- In species that have diseases of concern with incubation periods of 30 months or longer, only the non-breeding animals can exist in dynamic groups.

Commingling Outside the Production System

- Group identified animals that enter concentration points where commingling with animals outside a single production system occurs will require individual ID.

III.C.2.2 Group/Lot ID for Other Species

Specific requirements for other species that utilize Group/Lot ID to record movements will be established.

III.D. Identification Devices

The official identification of an individual animal requires the attachment of a device to the animal with the appropriate identification number printed on it or electronically encoded in the chip. Two methods to identify animals are described – visible identification and radio frequency technology, both utilizing eartag devices to attach the US Animal Identification Number to the animal. Visible tags with no transponder are referred to as Visible ID Tags and tags with RFID technology are referred to as RFID Tags.

Note: Other methods of visible identification, i.e. tattoos, are referenced separately.

While most of the parameters or specifications of such devices will be established by the marketplace, some basic performance standards are necessary. Required visible information printed will be the official US logo and the complete official number. Optional visible information is allowed as long as the ability to read the tag is not compromised. The visible state postal code will not be required on National ID devices.

III.D.1 Visible Identification Tags

Basic standards for visible identification devices are listed below.

Standard: Visible Identification Tags

All Official Identification Tags must meet the following requirements:

Visible Identification Tags
Standards and Requirements for Visible Identification Tags
▪ the tag must bear an official unique national number ▪ the tag is designed for one-time use ▪ the tag may not be readily altered or otherwise tampered with ▪ the national identification number must be easily and reliably readable

III.D.2. Radio Frequency Identification

Radio Frequency Identification (RFID) devices are the most common form of electronic identification used in animal agriculture today. Other technologies, including bar codes and 2-D symbology, if used, must have appropriate standards established. Other biometrics that store measures in digital formats will require standardization as they mature and enter the marketplace. At this time, the primary area of focus is to foster the adoption of national standards for the use of RFID devices in animals.

Standard: Radio Frequency Identification of Animals

Radio frequency identification devices used for official animal identification must be ISO compliant. Various methods of attaching the RFID device to the animal exist, including implants, boluses, tags (eartags) and tag attachments (cylinder devices that fit over the stem of the male ear tag when applied to the animal). The most widely used method in animal agriculture is the eartag device. The utilization of the eartag method will be used as the standard RFID method until more experience is gained with the utilization of other methods. Requirements listed above for visual identification tags apply equally to tags that incorporate RFID technology.

Radio Frequency Identification of Animals		
Issue	Standard	Comments
Code Structure	ISO 11784 Radio Frequency Identification of Animals	The entire code structure is a 64 bit number, of which bits 16-26 are the country code and bits 27-64 are the animal number
Technical Concepts	ISO 11785 Radio Frequency Identification of Animals	
Method of Attachment	Eartag attachment	Other forms of attachment may be considered when experience from throughout the industry warrants.
Placement	Left ear	

- RFID Tags - Performance and Device Standards

The following chart summarizes the standards and performance requirements for Official Identification devices that incorporate radio frequency technology. As technology advances, equipment and device standards will need to be tailored to best meet species-specific needs.

RFID Tags
Performance and Devices Standards
▪ Transponders are to be encoded with the US country code (840). ▪ The official number encoded within each transponder must not be able to be altered. ▪ The required visible US logo and the AIN will be printed on the transponder portion of the tag. ▪ Tags are to be of tamper-evident construction i.e. if an installed tag is removed, either the transponder will no longer operate or there is evidence the tag has been tampered with. ▪ The tag shall not be capable of causing chemical contamination of meat or edible offal, damage to the hide, or be capable of adversely affecting the health and well being of the animal following attachment. ▪ There should be no apparent physical deterioration (other than color) in tags due to ultraviolet radiation, rain, heat and cold or other environmental influences over its expected lifetime. ▪ The transponder within the tag shall be reliably machine-readable for the expected lifetime of the animal. ▪ Manufacturers will provide species-specific application standards. ▪ When applied in a manner approved by the supplier, the average tag loss is not to exceed 1% per annum after insertion. Environment conditions and species differences may require the accepted loss rate to be modified. ▪ The minimum height for numbers/letters is to be 5 mm. The minimum height and width of the official logo is to be 5 mm. Species differences may require the accepted size to be modified. ▪ The printing and tag color contrast of the official logo, lettering and numbers are to remain readable (at 0.75 m) for the expected lifetime of the tag. ▪ Only approved devices for use in the National Identification System will use the US logo.

- Testing and Auditing RFID Tag Performance

The Oversight Board (or an appointed technical committee) shall be responsible for the accreditation of tags for use under this program. This accreditation shall be based on species appropriate evaluation and may include laboratory trials, field trials, and review of existing data, as appropriate.

The Oversight Board will also approve third party verifiers and testing laboratories.

- RFID Reader Standards

The Oversight Board (or an appointed technical committee) shall be responsible for the accreditation of readers for use under this program, particularly as technology changes. This accreditation shall be based on species appropriate evaluation and may include laboratory trials, field trials, and review of existing data, as appropriate.

RFID Readers

Performance and Standards for RFID Readers

- All RFID transceivers (ear tag readers or reader systems) must be ISO 11785 compliant. In other words, the RFID readers should be capable of decoding both half duplex (HDX) and full duplex (FDX-B) ISO 11784 compliant transponders.
- RFID transceivers / data collection systems should have the capability to enter tag data manually.
- RFID transceivers (ear tag readers) must have a species and application specific minimum read distance with all transponders (ear tags) as certified by the Oversight Board.
- All RFID transceivers (ear tag readers and reader systems) must be capable of communicating to an external device via RS232 (industry standard data cable).
- All RFID transceivers (ear tag readers) and necessary peripherals exposed to the environment of the application should be water and shock resistant.

III.E. Other Identification Methods

(Text pending)

III. E. 1. Tattoos

(Text pending)

IV. Information System

The US Animal Identification Plan requires an information system and infrastructure to support the 48-hour traceback objective. The overall system must allow for the identification of each premises, and the recording of the US Animal Identification Numbers and the US Group/Lot Identification Numbers. Additionally, the system must associate the animal ID data to each premises where the animal or group was located and the specific dates the animal(s) was at the location(s).

The following flow chart provides an overview of how premises and animal numbers are allocated and how animal movement/location records are received from various sectors of the industry. A step-wise explanation follows.

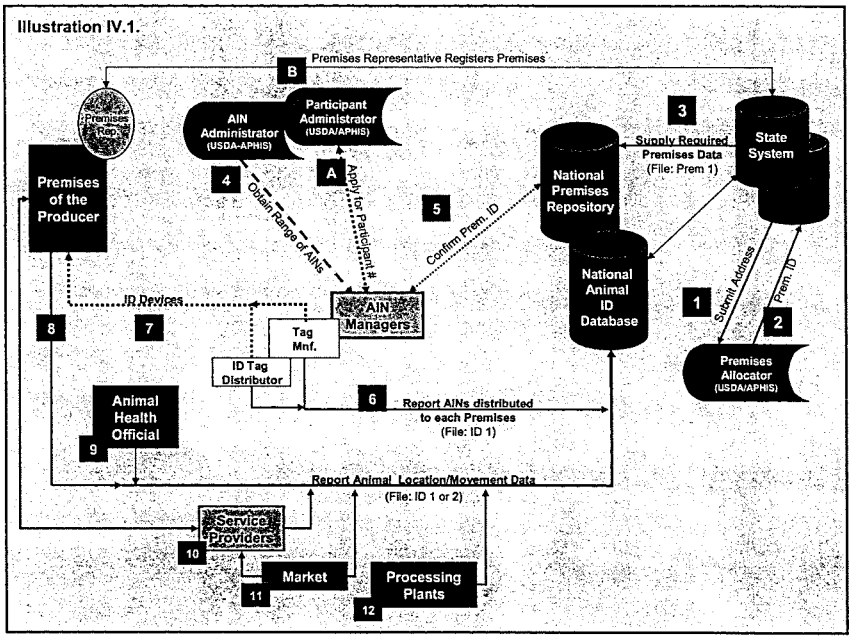

The primary components of the information system include the Premises and Animal Systems.

IV.A. Premises System

The Premises System includes the Premises Identification Number Allocator (Premises Allocator), the State Premises System/Databases (State System) and the National Premises Repository (Premises Repository).

- Premises Allocator: The national uniqueness of each premises identification number is achieved through this program that all state (or regional) systems interact with when administering the assignment of premises numbers. (*Appendix C provides a more complete explanation of the Premises Allocator system.)*
- State System: The state premises system (database) provides for the administration of premises enrollments according to the national requirements. While each state will be required to adhere to the national standards and requirements, other functionality and data collection is at the discretion of the state. To avoid confusion/conflicts, the state administers the enrollment of premises within their geographic area (or boundary of the multiple states working together).
- National Premises Repository: This premises repository centralizes agreed-to data that certain Non-producer Participants need access to when performing their roles. For example, USAIN Managers must interact with the Premises Repository to confirm that a producer has a valid Premises Identification Number before processing the distribution of official ID tags to that producer.

  The data in the Premises Repository is received from certified state systems (see Section VI.D.2 for requirements of a certified state system).

The enrollment, or identification process, of a premises is initiated by an individual from the premises or someone representing the premises (depicted in Illustration IV.1. reference B.) The following explains various functions of the information system as represented in Illustration IV.1.

Brief Premises System Flow Chart Description

1: The state system premises enrollment begins by requiring the producer or operator of an entity to provide the address (or legal description if no address is available) of the premises. The state system, through a machine-to-machine interface, passes the address to the Premises Allocator. The Premises Allocator determines if the address is valid and if the address has previously been allocated a US Premises Number.

2. When the address is valid and has no premises ID on record, the Premises Allocator returns the next available sequential premises number to the state system. If a US Premises ID Number is on record, the Allocator will return that premises number.

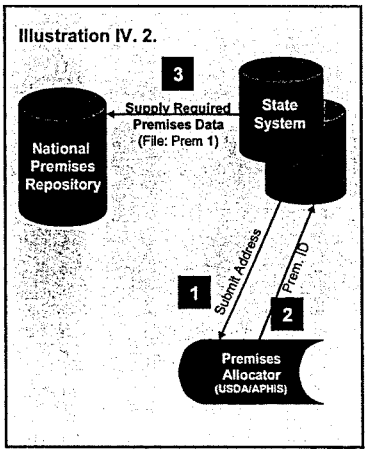

The state system completes the identification/enrollment process of the premises, collecting as a minimum the data elements required by the Premises Repository.

3: The state system updates the Premises Repository according to prescribed update procedures and file format specifications. This includes updates of new and revised premises records daily and monthly "master" updates. The "master" updates contain all records from the State System.

The file format of the upload file from the state system to the Prem Repository is defined in the file format, "Premises Upload Record Format" (File: Prem 1) in Appendix B.

IV.B. Animal System

The Animal System includes the National Animal Identification Database (ID DB) that associates the USAIN to a Premises. Other functions include the USAIN Administrator and USAIN Managers. The USAIN Administrator, a function of USDA/APHIS, will allocate USAINs to USAIN Managers. USAIN Managers are individuals or firms who are responsible for the administration of identification tags with the USAINs to a producer's premises (see Certified USAIN Managers, Section VI.E.).

- National Animal Identification Database: The ID DB is a centralized database that receives records from both producers and Non-producer Participants, including but not limited to, the allocation of USAIN to a premises, records of animal sightings, movements, and termination. Access to the ID DB is restricted to state and federal animal health officials when information is required to perform their responsibility for maintaining the health of the US herd.
- USAIN Administrator: The USDA/APHIS will administer the allocation of AINs to certified USAIN Managers according to the requirements outlined in the Governance section.
- USAIN Managers: Individuals, organizations/companies, state departments of agriculture, etc., may be USAIN Managers. Only USAIN Managers certified by the USDA will be allocated US Animal Identification Numbers. USAIN Managers are responsible for the single assignment (allocation) of AINs from within their block and reporting the allocation of AINs to a premises by its US Premises Number to the ID DB. A USAIN Manager, in many cases, will work collectively with various resources (tag manufacturers, tag distributors, etc.) in the delivery of ID devices to a producer, yet they remain responsible for the completeness and accuracy of the data.

Brief USAIN Administration and ID Tag Distribution Flow Chart

A: The USAIN Manager will first apply to the USDA/APHIS for a Non-producer Participant Number (see Appendix D).

4: USDA/APHIS allocates US Animal Identification Numbers to certified USAIN Managers (see Appendix D).

5: USAIN Managers access the Premises Repository to validate if the reported premises number of the producer is correct. If the US Premises ID Number is correct, the USAIN

Illustration IV. 3.

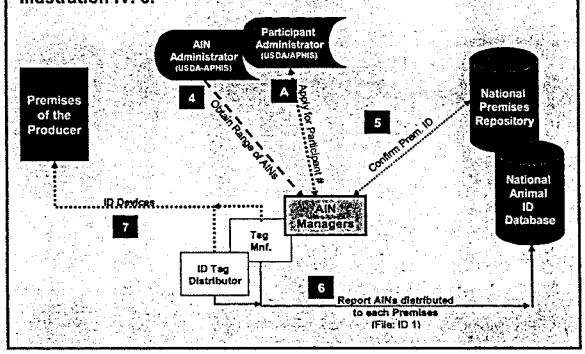

Manager provides official identification devices to the producer/premises.

Note: Official Identification devices can only be provided to entities that have a valid premises identification number.

6: The USAIN Manager reports the USAINs to the ID DB that were printed or encoded on the identification devices as the order is processed or the tags are purchased.

7: The ID devices are drop shipped or sold direct to the premises.

The "USAIN/Animal Transaction" file (File: ID #1) is used to upload the file from the USAIN Manager to the National Animal ID Database and is described in Appendix B.

Brief Animal Event/Transaction Record Flow Chart

Records that provide animal location and movements are received from various sectors of the industry (producers, animal health officials, service providers, markets and slaughter plants). Such inputs are obtained through the integration of the USAIN/Animal Transaction file (File: ID #1 or # 2).

8: Producers can submit records direct from their farm/ranch to the ID DB.

9: Animal transaction records are reported from Animal Health Officials when conducting animal/herd testing programs, completing electronic Interstate Certificate of Veterinary Inspection, etc.

10: Service Providers that offer herd management services to producers, through proper agreements with their clients, submit animal location/movement data.

11: Records obtained from the market, in particular ones collected from the RFID system, are automatically sent to the National ID DB.

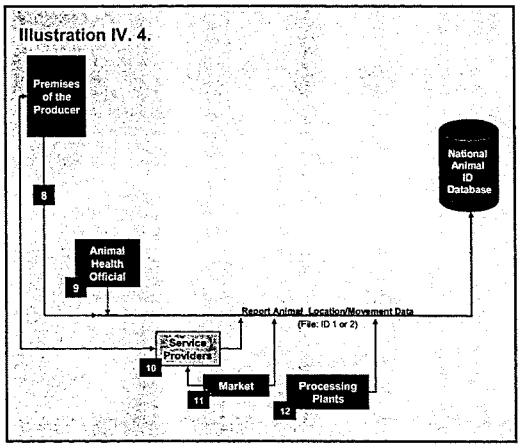

12: The record of the animal's termination is submitted by the processing plant.

The interaction of the National ID DB and the State system is represented by reference line 13 in illustration IV.1.

IV.C. Data Access

IV.C.1. Premises Repository

It is understood that state and federal animal health officials need access to the premises repository in animal traceback situations. Any other access to the premises repository will be limited to authorized users who have "look up" capability to validate information necessary to perform their roles as Non-producer Participants. For example, a key factor in assuring animals are tracked to the correct location is the accurate recording of the premises ID that the animal is associated with. An invalid or incorrect premises ID that was submitted to the national repository could delay the 48-hour traceback requirement. Therefore, certain organizations that are authorized Non-producer Participants will need access to premises information for validation purposes.

IV.C.2. Interface

The two main interface needs that were identified require that Non-producer Participants need lookup of single premises ID and certain Non-producer Participants need offline capabilities to obtain validation on a group of premises ID in one single batch process. Therefore, the following interfaces need to be made available:

- Manual access to the premises repository via a secure web site
- Direct automated secure calls using internet file transmission to the premises repository to obtain a return file with the requested validation results.

IV.C.3. Functionality

Based on the various data needs, different search capabilities need to exist. Since the difference in upfront development cost would a minor issue, the plan calls for a system that has flexibility in mind. The recommendation is to have three levels of access by which premises data and error validation can be obtained.

- Level 1: Validation of premises ID

  This is a minimum level of access to the premises repository that would allow a user to type in a premises ID (could also include the state the premise was issued), or electronically upload one and retrieve a message indicating the premise ID was found, or not found, or if the ID itself is incorrect (i.e., incorrect check digit). No information regarding the premises would be returned. A similar procedure is currently available in Canada for tag distributors.

- Level 2: Obtaining address information on a single premises ID

  This secondary level of access to the premises repository would allow a user to enter a premises ID and retrieve the address information for that premise. The same validation used under user level 1 would also take place. For example, this level of access would be required if a service provider needs to validate that a premise ID for a producer is the correct one.

- Level 3: Complete search capability

  The third level would only be used if a user needs access to the premises repository to search the repository based on name and address. This level could be restricted by states if needed. For example, a USDA animal health official would have search access to all premises information in the repository, while a state health official could only access premises in his/her state.

IV.C.4. Security

Recognizing the security and privacy issues, the plan calls for the following requirements:

- Access to the premises repository is based upon logging into the system using a user name and password.
- Based upon level of access to the premises repository, a user will be assigned one of the three levels of access described above.
- Based upon level of access to the premises repository, a user will be assigned access to specific state(s).
- User name and password and level of access are issued and maintained by USDA/APHIS after the USAIP Non-producer Participant has passed the application process for having access to the premises repository (see Governance section for application procedure).
- Secure web site access with various security layers between the web servers and database to avoid the introduction of viruses, or hackers to access the database.
- No data can be edited in the database via the website (read only to authorized users)

IV.C.5. National Animal Identification Database

It is recognized that approved federal and state animal health officials would need access to the animal ID database(s) in the case of an animal traceback situation within a state, or across states. It is also recognized that approved state officials might only have access to records for animals that reside within their state. No other individuals will have access to the Animal ID database(s).

IV.C.6. Security

Recognizing the security and privacy issues, the plan calls for the following requirements which are similar to requirements for accessing the premises repository:

- Access to the animal ID database is based upon logging into the system using a user name and password.
- Based upon level of access to the animal ID database, a user might be assigned access to animals that reside (or have resided) in a specific state.
- User name and password and level of access are issued and maintained by USDA/APHIS after the USAIP Non-producer Participant has passed the application process for having access to the animal ID database (see Governance section for application procedure).
- Secure web site access with various security layers between the web servers and database to avoid the introduction of viruses, or hackers to access the database.
- No data can be edited in the database via the website (read only to authorized users)

IV.D. Data Validation

As information will be supplied by many USAIP Non-producer Participants to the national system, it is key that some type of validation is in place to maintain the accuracy of the data at

the national level. Recognizing that higher levels of accuracy will require a higher cost to maintain the national system, procedures that catch data errors need to reflect the need for a high level accuracy, but also minimize the burden of error handling on USAIP Non-producer Participants who supply data.

Most errors that are found will probably be small in terms of impact on the national system; therefore, it is recommended that depending on the severity of the error, records will be stored in the system, their error codes and a field indicating the level of severity of the error will be stored with the record. The errors would be electronically reported to the USAIP Non-producer Participant who supplied the data, and basically allow the data supplier on a voluntary basis to fix the errors and resubmit the corrected data if they elect to do so.

For more severe errors such as using an incorrect allocation of USAIN numbers, or an incorrect record format, records will also be loaded into the animal ID database, but would be labeled with a higher level of error severity and would be excluded from any general data queries. The errors would be electronically reported to the data supplier, and basically allow the data supplier to fix the errors and resubmit the corrected data. Depending on the severity of the errors, the organization might need to be directly contacted. These error rules will be posted on the Web site and be available for each organization that will be sending records.

More details of the error checking protocols are explained in Appendix G.

IV.D.1 Data File Transmission

Data files submitted to the national system need to be sent to a central location. A universal method of transmission will need to be implemented to meet the various industry needs. Only Non-producer Participants with the appropriate level of security will have access to the central location to transmit data files. As data files will be uploaded any time of the day and day of the week, the system receiving the data files needs to be up and running 7 days a week and 24 hours per day. To cleanout previously transmitted data files, after 20 days files will be removed.

IV.D.2. Data integrity

To ensure an audit trail is maintained, all errors will be stored in the database including the error codes and a level of severity associated with the type of error. If the error was caused due to a conflict with a previously submitted record, both errors will be labeled as errors. The database administrator will need to develop a level severity (convert the proposed error type codes to an error level of a scale from 1 to 5).

To ensure the integrity of the database, it is deemed necessary for USDA/APHIS to develop a certification program that data providers will need to adhere to. The certification process will include guidelines and standards for organizations submitting records. An organization submitting records to the national system will need to agree to adhere to the guidelines and standards before there Non-producer Participant ID is issued to them.

The database administrator will monitor the integrity and quality of the information sent to the database. At any date USDA/APHIS can revoke the right to upload information to the national system if the organization is not adhering to the certification process.

V. Implementation Plan

The Development Team acknowledges that the achievement of the 48-hour traceback system will require years to fully implement. It has established basic requirements that need to be achieved as essential components for the overall national ID program. In addition, the Development Team recognizes the differences between species regarding the current status of their identification systems. Therefore, each species group will develop "phase-in" plans in which their industry will implement specific functions and/or protocols that support the implementation of USAIP.

Note: The issues of confidentiality of the data and access to it, including FOIA, must be adequately addressed by the USAIP before the industry will support its implementation. Furthermore, agriculture is to be designated as a critical infrastructure (see Appendix H., Secretary Veneman's statement to the Gilmore Commission).

The implementation of the US Animal Identification Plan is recognized as a complete program, yet is accomplished through the establishment of several priority requirements that are necessary regardless of the species group. These include systems and capabilities that must be functioning by designated dates. Additionally, rules and regulations that will be part of the Code of Federal Regulations (CFR) are summarized in the Governance section.

V.A.1. Premises Identification

The foundation of the overall system is the establishment of a National Premises Identification System which is to become operational by July 2004. To have an operational National Premises Identification System the Premises Allocator, National Premises Repository, and the state systems must be operational. Target dates are listed in the following chart.

The following guiding principles are offered to support the effective implementation of premises identification within each state by the state authorities:

1. Require that animals presented for sale or lease have a recorded US Premises Identification Number of the seller / leasor.
2. Require that animals purchased or leased have a recorded US Premises Identification Number of the buyer / leasee.
3. Require that animals presented for slaughter have a recorded US Premises Number from the immediate owner. Animals moving directly to slaughter from herds of origin or local Group/Lot identified feeding operations, need not be individually identified but allowed travel under an US Premise Number and/or local Group/Lot identification.
4. Grant the authority and give necessary instructions to official responsible entities that can help facilitate the assignment of US Premises Numbers.

Note: While the states might vary in their timetables to implement their state premises systems, the "standardized" State Premises System provided by the USDA is to be made available early 2004. The utilization of the USAIN is contingent on the state having a certified premises system. The goal is to have all states operational (using the standardized system or another USDA certified system) by July 2004.

V.A.2. Animal ID

The legal requirements, in particular the Code of Federal Regulations (CFR) and associated logistics for numbering systems and official identification devices, are additional basic requirements. Additionally, the system for assigning approved Non-producer Participants their numbers, allocating US Animal Identification Numbers to USAIN Managers, and reporting allocated numbers to the National ID Database all need to be developed and operational to initiate the USAIP.

V.A.3. Animal Tracking

The infrastructure for the reporting of animal locations and movements is necessary to track animal movements. Point of Origin (or animal's premises when tagged) is achieved through the allocation/distribution of USAIN Tags to a premises for individual animals. The source of data is from USAIN Managers who report the distribution of USAIN Tags to the National ID Database. Therefore, the National ID Database needs to provide this initial function by April 2004 and fully operational by September 2004.

The National Animal ID Database is to receive the record of interstate movements; thus, the integration with the electronic Interstate Certificate of Veterinary Inspection" (ICVI) should be achieved by mid 2004 (full compliance July 2005).

Intrastate commerce movements, while the responsibility of each state, must have standardized protocols to ensure basic uniformity among the states to support the national system. However, the differences among the states are significant; thus, each state will be responsible for administering their intrastate movements permit system to best meet their needs. The state movement permits system will be developed and implemented by July 2006.

The infrastructure to obtain animal sighting records at markets and termination records at processing plants will be established at priority locations and will progress over time. The infrastructure is to be in place by July 2004 to support the collection of such data by establishments that are the initial suppliers of such data.

Data from systems managed by private companies and certified by the USDA as a Non-producer Participant will have proper protocols established by July 2004. The infrastructure for recording Group/Lot animal movements can occur locally.

Note regarding compliance as the USAIP is implemented: It is acknowledged that situations exist where producers do not market livestock on a routine basis, and thus, may not appear on a state animal health authority's current active list of producers. In such scenarios there might be situations where a producer has not obtained a premises number as they are unaware of the premises requirement. To ensure the marketing of cattle remains timely and efficient in these situations, it is recommended that the marketing entity be given the authority to apply a USAIN tag to the livestock (at the seller's expense) and to sell the cattle involved. Within 24 hours of the sale, the marketing entity would provide that producer's information to the state animal health authority to facilitate the recording and issuance of a US Premises Number for the appropriate premises. The AINs applied to the producer's livestock would be associated to the new Premises ID following procedures established for approved tagging sites. The reporting of the sales transaction would then be submitted to the National ID database according to established requirements for all normal sales. It is also recommended that the marketing entity be provided reasonable compensation for their assistance in reconciling such situations.

Summary of Basic Requirements:

The following charts summarize the basic requirements that must be achieved to initiate implementation of individual species phase-in plans.

USAIP Basic Requirements

System Requirements and/or Capabilities

Issue	Date: Available	Date: Complete or Required	Comments
National Premises System		July 2004	Fully Operational.
Premises Allocator	October 2003	January 2004	Required for states to obtain US Premises ID Numbers.
National Premises Repository	March 2004	July 2004	States upload to the Premises Repository. USAIN Managers use Premises Repository to validate client's US Premises ID Number.
State Standardized Premises System	January 2004	April 2004	Standard State Premises System available for states to utilize - provided by USDA.
State Systems Operational	*	July 2004	* The state must issue premises numbers to have USAIN used in their state.
Non-producer Participants	January 2004		System to allocate approved Non-producer Participants their number; required for USAIN Managers and others entities.
National ID Database	April 2004	Sept. 2004	Initially, ID Database will receive record of USAIN distributed to a premises. Complete system will receive data from other Non-producer Participants.
Animal ID			
Allocating AINs to certified USAIN Managers	Feb. 2004		
Certified USAIN Managers interact with the Premises Repository	March 2004		Need to validate US Premises ID Numbers. A premises ID is required for any premises to receive USAIN Tags.
USAIN Managers report the allocation of AINs to the National Identification Database	April 2004		Provides "point of origin" (point of tagging) and is the initial record to the National ID Database.
Animal Tracking			
Electronic Certificates of Veterinary Inspection Interstate Health Certificates	July 2004	July 2005	Integration with the National ID Database to receive interstate movement records electronically.
Integration with systems provided by service providers	July 2005		Opportunity to receive location records from industry Non-producer Participants.
Intrastate movement permit system	July 2005	July 2006	State system maintains intrastate commerce movements and others prescribed by state statute.
Packing Plants	July 2004	July 2005	Submit record of animal termination.
Markets / Assembly Points	July 2004	July 2005	Submit record of animal movement.

The major milestones to achieve the ultimate 48-hour traceback objective are summarized below.

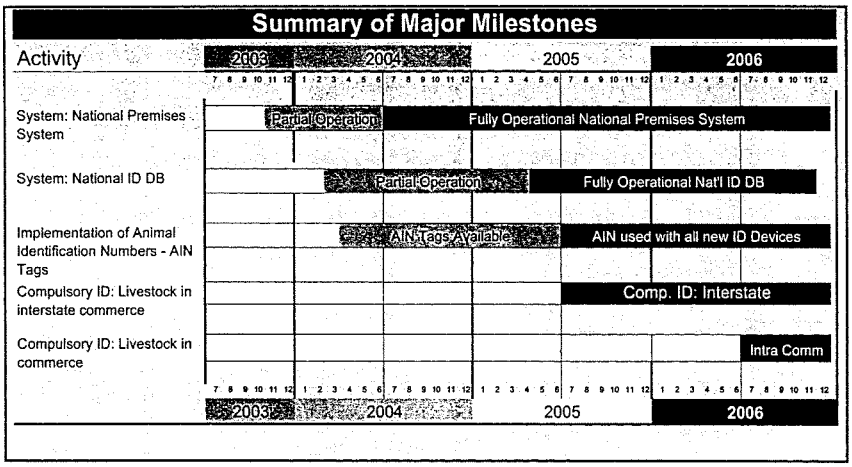

V. B. Implementation by Species Groups

The identification and infrastructure varies among the species groups. The utilization of individual animal identification and/or Group/Lot ID is dependent on the management practices of a particular species. An animal production system can use Group/Lot Identification if the producer is able to demonstrate to the satisfaction of state animal health officials that, through group identification and production records, traceback to all premises with direct contacts of a suspect animal can occur in 48 hours.

V. B. 1. Cattle

The 2002 Work Plan presented a phase-in plan for cattle with differing minimum identification requirements within each phase. Considering the urgency that the United States attain a program with timely traceback capability, the current USAIP calls for the immediate implementation of the long-term identification methods. Specifically, cattle that require individual identification will be identified when the identification program is initiated with an official tag bearing the US Animal Identification Number (USAIN) versus a tag with only the premises identification number. The preferred technology is radio frequency, but remains contingent on adequate funding to support the introduction of RFID tags versus visible identification tags. The Development Team also feels this approach will be more clearly understood as the identification practices will be established when the program is initiated instead of making changes to the "tag numbering" format over time.

The USAIP Cattle Phase-in Plan provides for a rapid progression to track the movement of cattle from a premises as they enter commerce. This primary objective is illustrated in the following charts.

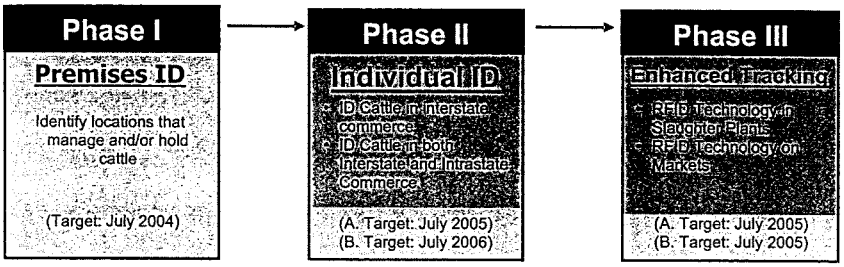

- **Phase I - Premises ID**

All premises that manage and/or hold cattle are to be identified through the state premises system to achieve a national premises system. As noted earlier, premises identification is a prerequisite to individual animal identification, and thus, must be initiated to meet the requirements of the US Animal Identification Number System.

- **Phase II - Individual Animal ID for Cattle moved for Commerce**

The primary timetable requirements established in Phase II for cattle are:

- ☐ All cattle that enter interstate commerce are to be officially identified and their movement is to be reported to the National Animal Identification Database through the electronic Interstate Certificate of Veterinary Inspection (ICVI). Target: July 2005.

- ☐ All cattle that enter commerce (intrastate and interstate) must be identified with an official RFID tag prior to leaving their current premises and such movements are reported to the National Animal Identification Database.
  Target: July 2006

Exception to the requirement includes:

- fed cattle moving from a feedlot direct to a slaughter plant
- cattle moving from their premises of birth direct to slaughter
- cattle moving to another premises when they remain under the same person's control (ownership) and when they are not co-mingled with cattle from other premises.

Approved tagging services and tagging sites will provide alternatives for producers to tag their cattle in cases when facilities at one's premises are not available.

- **Phase III**

The integration of RFID readers will be initiated as cattle volumes with RFID tags warrant. The system capabilities are to be available July 2004 with significant integration by July 2005.

USDA inspected cattle slaughter plants and state licensed markets are to have RFID readers in place by July 2005.

Note: Target dates are dependent on the successful implementation of the Basic Requirements noted on page 30.

V. B. 2. Swine

The swine industry has had mandatory identification requirements since 1988. These requirements encompass swine movements in interstate commerce and interstate swine movements within a production system. In addition, market swine are identified back to their owner at federally inspected plants. Thus, in regards to swine identification, interstate movements are already being tracked. It should also be recognized that most market swine are tracked as groups for production management purposes and detailed group movement records exist locally today. Although most producers track group movements, a standard for Group/Lot ID will provide other producers with a mechanism to adopt this concept, give this valid swine identification method national credibility, and embrace the National Premises ID System.

Three phases are recommended to improve traceback / trace forward in pork production for disease management purposes and are illustrated in the following charts.

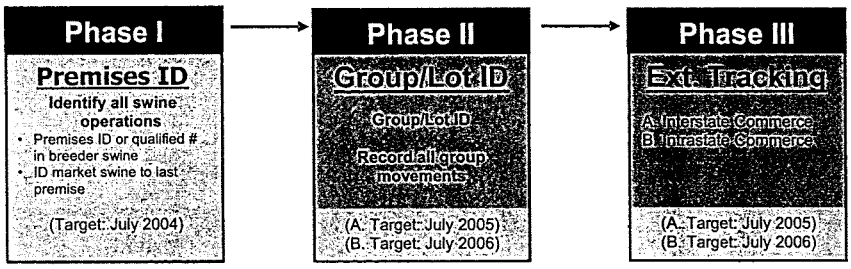

- **Phase I – Premises ID**

Phase I provides for the implementation of the National Premises Identification System. This will allow the swine industry to enhance identification of culled breeder swine and market swine to the last premises. Phase I will also address improvements that can be made in swine identification for the purpose of disease management.

For the breeding herd, Phase I will require, as a minimum, the application of an ear tag with visual premises identification in all replacement breeder swine as they enter the breeding herd. The replacement breeder swine suppliers and/or breeding herd managers may prefer to use official individual identification devices with the US Animal Identification Number (USAIN) for breeder animals. However, for disease management purposes, it is imperative that the "last premises" ID is readily available. A premises ID tag may be administered to replacement breeding stock in addition to an existing USAIN.

Phase I for the identification of market swine to their last premises will be accomplished with two options:

1) All premises with market swine will have their unique national US Premises ID Number printed in bar code format on sheets of adhesive labels. Alternatively, the bar codes can be printed on the actual travel documents. Regardless, the premises ID will be a part of the travel documents as animals are marketed and presented to the packer/processor at delivery. Upon arrival to the packer/processor, the premises ID bar code is scanned linking the lot tattoo number and owner to the premises ID.

2) Pork producers can use the official individual identification devices with the US Animal Identification Number on each pig if that system provides the "last premises" identification. If not, then Option 1 is preferred for optimal disease management purposes.

Implementation Date: July 2004

- **Phase II – Group/Lot ID**

  9CFR 71.19 provides for the interstate movement of groups/lots of pigs within a production system based on specified production record requirements, written agreements with state animal health officials and regular veterinary inspections. 9CFR 71.19 confirms USDA's recognition of pork production records maintained locally as adequate identification for pigs. Pork producers will be allowed to continue pig movement and tracking under this rule.

  As described in the standards, Group/Lot ID (G/L ID) will be a combination of the US Premises ID Number identifying the location where the group was created and the date the group was established. Group/Lot definitions and details are described in the Standards section of this document.

  The G/L ID standards will be required of all pork producers using Group/Lot ID. The recording and maintenance of those data will occur at the local level and be made available to USDA in the event of a significant animal health event. In the future when the resources, confidentiality assurances, and value become a reality, the transition to reporting Group/Lot movements to a national repository can occur seamlessly.

  Implementation: July 2004

  - Electronic Data Collection

  As with the USAIN, an electronic data collection system will be designed to ensure Group/Lot data accuracy and minimize burdens on producers to record and report data.

  Implementation: July 2005

- **Phase III – Tracking**

  Although animal tracking can occur at the local level, the reporting of animal movements and locations provides the necessary data to accomplish animal tracking in a single database at a national level.

  - Electronic Reporting Interstate Movements

    The interstate movements of swine are reported through the integration of the Electronic Certificates of Veterinary Inspection Interstate Health Certificates

    Implementation Target Date: July 2005

  - Electronic Reporting Intrastate and Interstate Movements

    The intrastate and interstate movement of swine is reported through the integration of the Electronic Certificates of Veterinary Inspection Interstate Health Certificates.

    Implementation Target Date: July 2006, except as provided by 9CFR71.19.

Note: At this time the need to report swine group/lot movements where no change in ownership has occurred to a national repository requires a demonstration of added value and assurances of confidentiality and security.

V.B.3. Alpaca and Llama *(Text Pending)*

V.B.4. Aquaculture *(Text Pending)*

V.B.5. Deer and Elk *(Text Pending)*

V.B.6. Equine *(Text Pending)*

V.B.7. Goats *(Text Pending)*

V.B.8. Poultry *(Text Pending)*

V.B.9. Proposed National Sheep USAIP Implementation Plan

- **Phase I**

In Phase I the Sheep industry will continue their identification with existing mandatory and voluntary visual scrapie ID programs as currently structured. These programs include:

- Premises ID using visual tags (metal and plastic) as well as individual animal ID
- Tag orders are placed electronically or by telephone to the state VS office and are electronically transmitted to the tag manufacturer and
- Payment for tags is made by USDA/APHIS.

The ID program will continue as described above for another year or two to provide a sense of stability and continuity to these industries that have had significant ID changes over the past 3 years.

Field Performance Evaluation

APHIS, with assistance from commercial component sources, would fund an 18-month comparative field performance evaluation of components of RFID sheep tracking system components (tags, boluses, static antenna/-readers, hand readers) used in typical environments (range and farm, humid and arid, temperature extremes, large flocks and small). A third party would conduct this evaluation.

The overall goal of the field performance evaluation is to identify a set of components that as documented performance that meets the needs in current environments (farm, range, feedlot/pastures, auction markets, commercial transport, slaughterhouse) and that can do so without unduly interfering with the normal movement of animals around the USA.

- Components to be tested and documented:
  - RFID ear tags & boluses from commercial sources
  - RFID handheld readers
  - RFID antenna/readers from commercial sources

- Animal types in which to test the components
  - Range ewes and rams
  - Commercial farm flock (ewes and rams)
  - Seedstock and Stud flock (ewes and rams)
  - Hobby flock (fiber) ewes and rams

- Emphasis would be placed on addressing this issues:
  - What works in the primary field environments that will occur in a national system (and how well),
  - What doesn't work well in any of the above environments,
  - What needs improving,
  - What pleases the co-operating users,
  - What frustrates them,
  - Tag loss rates in the various environments
  - Infection % and concerns from insertion of ear tags
  - Tag reading % for the various tags in the range of reading systems.
  - Recommended insertion sites in the ear or elsewhere
  - Recommended insertion/application time in animal's life
  - Throughput rates – number of sheep read per hour
  - Strategy for non-readable id in farm/ranch and market settings
  - Reader/antenna:
    - Durability in all weather and normal working conditions
    - Ability to read tags from multiple sources (including tags w both FDX-B and HDX technology).
    - Throughput in the field. How many animals can pass through/by the antenna per hour and be read accurately?
    - Impact on animal flow in the various locations. How many/minute or hr. moved up the chute without the antenna. How many moved up the chute w. the antenna(s) in place
    - Effect on speed and accuracy when presented with varying sizes, ages, breeds of sheep and goats.
    - Ability to cope with 110-120 v. AC power variations and battery input situations
    - Ability to be set up in the field on a temporary basis for loading and unloading animals in isolated situations.
    - Ease of rapid repair/replacement if a reader or antenna fails for any reason.
  - User acceptability & "friendliness" of ear tags.
    - Ease/speed of installation
    - User evaluation of applicator comfort.
  - User acceptability of reader/antennas. User evaluations to be obtained from::
    - Auction markets
    - Loading facilities (on/off semi trailers at sites other than slaughterhouses and auction markets)
    - On farm
    - Entry point to slaughterhouses
    - Shows/fair
  - Breeds differ in ear size and strength. How does this impact ear tag performance?
  - Environments that cause higher losses occur (woven wire, brush)
  - Numbers on the ear tags:
    - Is there a practical reason to have the premise number printed on an RFID tag
    - How useful to the sheep or goat industry is the visual individual ID number? Should the industry request that this be a larger size to make it more readable?

- Trials to start on or before July 1, 2004 - and continue through Dec 31, 2005 if sheep and goat industry & APHIS deem necessary. Reports of progress sent monthly to the lead university and APHIS as well as to the sources of commercial equipment.

The actual change from the current scrapie premises number-based system to the US Premises Identification Number will occur when the National Premises System is fully operational. In the meantime the users will continue to apply tags with the present premises numbering system.

- **Phase II**

If the tests of RFID ID components suggest that a tracking system is practical and funding is secured and made available to the industry, the transition from a solely visual identification system to a combination of RFID and visual devices would begin voluntarily in March 2006.

The combination of RFID and visual tags would become mandatory in July 2006 at which time no other form of official tag can be used. The transition can begin earlier on a voluntary basis if the first year of field trials successfully demonstrates that RFID tags are satisfactory to users in a range of circumstances and if USDA/APHIS provides funding for the RFID devices.

RFID devices are planned to be printed with herd management ID along with USAIN number, US Premises Number and other necessary information. The visual ID will be necessary for accurate data recording during field necropsies and other scenarios where a reader isn't available.

Stationary readers and antenna's can begin to be installed at official movement sites (markets, loading yards, packing plants) from January 2006 onwards. A training program to educate the primary users needs to be developed and made available prior to this time. USDA/APHIS or another government entity will be expected to provide these devices.

Group/Lot ID will be permitted (as described in III.C.2.) when sheep move as a unit.

- **Phase III**

Based on the assumption that Phases I and II have progressed satisfactorily, all sheep that move from one premises to another premises would be required to have official RFID tags in their ears and all movements would be submitted electronically to the National ID Database.

Target date: July 2008.

VI. Governance

VI. A. Overview

Governance of the U.S. Animal Identification Plan (USAIP) will be a joint federal/state responsibility with appropriate oversight and input from industry. To ensure uniformity of operation across the United States, the Animal Plant Health Inspection Service (APHIS) and individual state animal health entities will be called upon to develop and administer key elements of the Plan. The overall governance of the Plan will become the responsibility of the U.S. Animal Identification Oversight Board under guidelines developed by the National Identification Development Team and identified in this section of the Plan.

The Oversight Board will have the responsibility to oversee, evaluate, and make recommendations to partners relative to the proper performance and maintenance of the USAIP, including appropriate monitoring of all the following program elements at both the federal and state levels:

- Administration of the official numbering systems (individual, groups, premises).
- Criteria for approving USAIP Non-producer Participants.
- Criteria for the evaluation and certification of USAIN Managers by APHIS.
- Approval process for official identification devices in accordance with the established standards.
- Administration of the National Premises Repository and National Animal ID Database, including access authorization rules.
- Animal ID partnerships and cooperative agreements between federal and state entities and/or state-to-state agreements.
- Appropriate security measures to protect data (FOIA issues, unauthorized disclosure, etc.).

In addition to the Oversight Board, species-specific oversight groups will be appointed by the industry to address specific or unique identification issues impacting their particular species. Recommendations from oversight groups shall be directed to the attention of the Oversight Board.

Following the endorsement of this Plan by the U.S. Animal Health Association, the Oversight Board will begin its governance responsibilities in partnership with APHIS and the individual state entities charged with the legal responsibility for administration of this Plan within their individual states. The Oversight Board will encourage APHIS and the individual state entities to proceed to implement the governance recommendations contained within this Section of the Plan through the promulgation of appropriate rulemaking at both the federal and state levels, so as to efficiently implement and maintain, to the extent practical, a uniform USAIP.

Once this Plan is fully implemented, maintenance of the Plan will become an important on-going process that must be continually addressed. Due to unforeseeable issues, inevitable change in production practices, vast species differences, continued producer participation, input, and oversight will be encouraged on the Oversight Board according to the guidelines recommended in this section.

VI. A.1. U.S. Animal Identification Oversight Board - Structure

The Oversight Board shall conduct all oversight functions necessary to ensure effective implementation of this Plan in the time frames specified in this Plan. Further, the Oversight Board shall provide continuing oversight to ensure that the goals and objectives specified in this Plan are achieved, so as to maintain the integrity of this Plan.

The Oversight Board shall be established by the respective Animal Identification Committees of USAHA and NIAA as a specifically designated entity to have broad oversight of the entire USAIP including both federal, state and industry participation and performance.

The original Oversight Board shall consist of no more than 21 individuals to be selected in the following manner:

- Twelve (12) representatives from industry as follows:
  - Six (6) from the major animal species (beef, dairy, equine, sheep and goat , poultry and swine)
  - One (1) from other animal species included in the USAIP
  - Five (5) at-large allied animal industry representatives with the caveat that no one sector of animal agriculture may have more than two representatives on the Oversight Board at any time
- Four (4) representatives from the federal level and four (4) representatives from the state level. All four (4) representatives from the federal level shall be designated by USDA
- One (1) person from USDA/APHIS shall be designated as the Board Coordinator and serve as an ad hoc non-voting member.

Within three (3) months following USAHA endorsement of this Plan, a process shall be established by USAHA and NIAA in consultation with the USAIP Steering Committee for selection of Oversight Board Members.

USAHA and NIAA shall consider the following criteria for selection of Oversight Board members:

- The nominee should be currently associated with the animal industry in an active capacity, such as a producer, commodity or allied industry representative or active state employee.
- The nominee should be nominated by some other person, group or state, depending on whether the nominee is being nominated from an industry sector or to represent a group of states or states within a region of the U.S.
- The nominee should provide credentials that indicate a competent level of expertise relating to oversight and maintenance of the USAIP.

VI. A.2. Monitoring the Overall Performance of the USAIP

The success of the USAIP is contingent on the completeness of the data and timeliness with which it is reported. The Oversight Board will establish procedures to ensure adequate performance levels of the overall system are continuously achieved. This will ensure that the system functions according to expectations if a real situation calls for a 48-hour traceback.

Auditing procedures will be implemented to establish benchmarks for ongoing comparisons/evaluations of the system. The data will subsequently form the basis of acceptable "tolerance" or "performance". Data that will be captured includes, but is not limited to lost tags, re-reads, failed tags, read-time, percent of required records submitted, percent of records reported within the required time frame, etc.

VI. A.3. Confidentiality of Producer Information

Procedures and processes will be established at the federal and state level to protect the integrity and confidentiality of all information that an owner or custodian of livestock is required to file on their premises and/or livestock as a specific requirement of the USAIP. Agriculture is to be designated as a critical infrastructure (see Appendix H. Secretary Veneman's statement to the Gilmore Commission). As a result, all critical infrastructure information required by the USAIP is to be protected from public disclosure.

VI.B. State and Federal Roles/Responsibilities

The USAIP will be achieved through shared responsibilities of state and federal agencies. These responsibilities are summarized in the following chart.

State and Federal Responsibilities

State Government	USDA
Maintain State Premises Database (system)	Certify USAIP Non-producer Participants
Submit premises data to National Premises Repository	Administer Premises Allocator Program
Maintain intrastate animal movement database	Administer allocation of US Animal Identification Numbers
Report interstate movement to National ID DB	Administer National Premises Repository
	Administer National Animal ID Database

VI.C. Non-producer Participants

The USAIP provides for the establishment of Non-producer Participants" (see definition on Non-producer Participant" in Appendix A.) who have authorized responsibilities as defined in the following table. These participants may submit information to the designated databases using File: ID #1 and/or File: ID #2. Data they supply will be associated with their Non-producer Participant Number so proper controls and integrity measures of the data can be implemented, including error handling procedures.

Licensed markets and cattle dealers/order buyers will submit required information to the National ID Database within 48 hours of the sale transaction. Slaughter plants will submit the required data within 48-hours of the animal's termination.

Non-producer Participants		
Name	Non-producer Participant Type	Role and/or Responsibility
Animal Health Official - Government	1	
Animal Health Official - Accredited Veterinarians	2	
USAIN Managers	3	Receives allocation of and administers US Animal Identification Numbers. Validates premises identification of entity receiving the USAIN Tags and reports allocation of USAIN by Premises ID to the National Animal ID Database
USAIN Tag Manufacturers	4	Manufactures official identification devices
USAIN Tag Distributors	5	Distributes official identification devices. Note: May also be USAIN Managers.
Laboratories	6	Diagnostic laboratories that submit data to the national databases
Order Buyers/Dealers	7	When individuals act as agents for the purchasing of livestock they will have their Non-producer Participant Number recorded at markets in lieu of a premises number
Service Providers	8	Submits animal records to the National Animal Identification Database
Tagging Services/Sites	9	Apply tags on behalf of producer and submits File ID#1 to National ID DB

The USDA will establish enrollment/application procedures for Non-producer Participants and will be responsible for the allocation of unique Non-producer Participant Numbers to such entities/individuals. The Non-producer Participant Number is a unique 7-character field and is defined in the Standards section of this report.

VI. D. Premises Identification

USDA/APHIS shall promulgate regulations, effective July 2004, that mandate a uniform national premises information system that will support the recording of animal movements for both intrastate and interstate commerce. The definition of a premises and the national premises identification number is presented in Section III. A.

VI. D. 1. Administration of Premises Identification Numbering Systems

USDA/APHIS shall be responsible for the allocation of nationally unique premises identification numbers in accordance with the national standard. The Premises Allocator Program, through a secure web-based interface with certified state systems, will be administered by USDA/APHIS. The functionality of the Premises Allocator is explained in Appendix C.

The Premises Allocator, in addition to allocating unique premises numbers to an address or legal land description, will maintain a record of the premises identification numbers allocated and the address associated with each Premises number.

APHIS may begin to issue premises identification numbers to a state if requested, as soon as the Premises Allocator System is in place. In return the state is required to meet all standards and requirements currently defined in the USAIP. This will allow producers to immediately obtain an official premises identification number that will not need to be changed in the future.

VI. D. 2. State Premises Systems

USDA/APHIS will publish standards that state premises systems must adhere to and operational requirements that must be achieved to have a certified state premises system. The regulations shall specify the information defined in File: Prem #1 (see Appendix B) as the premises information that shall be uploaded from each state system to populate the National Premises Repository and that each state is responsible for the administration of the premises within the geographic area for which it has responsibility. Only certified state premises systems (see definition in Appendix A) will have access to the Premises Allocator Program (see Appendix C).

The standards and operational requirements shall be utilized by USDA/APHIS to periodically review all state premises systems employed for identifying all locations within their state boundaries that contain livestock that need to be identified under the USAIP.

States shall submit their premises ID plans for review and share all data and information requested by USDA/APHIS. Any critical infrastructure information that is requested will be kept confidential. The Oversight Board shall develop appropriate mechanisms to evaluate the performance of each state relative to their ability to supply timely, creditable and updated premises location information, so as to ensure compatible and efficient functionality of the USAIP

The following chart summarizes the primary requirements of a certified state premises system.

State Premises System
Standards and Requirements for a Certified State Premises System
• Utilize the Premises Allocator following prescribed protocols to assign premises identification numbers to a location in accordance with the definitions of a premises
• Collect and maintain required information as presented in Standard: National Premises Data Elements
• Collect and maintain "state maintained" information as presented in Standard: State Premises Data Elements
• Maintain database of all premises registered, including historic premises data for 20 years.
• Submit File: Prem #1 to the National Premises Repository for new and revised premises daily and complete set of premises monthly.
• All information should be collected and maintained to meet the requirements of the critical infrastructure information protection (assure confidentiality).

VI. D. 3. National Premises Repository

USDA/APHIS is responsible for the administration of the National Premises Repository. All data maintained in the National Premises Repository is obtained from certified state premises

systems. This Premises Repository centralizes data that certain USAIP Non-producer Participants need access to when performing their roles. For example, certified USAIN Managers must interact with the Premises Repository to confirm that a producer has a valid Premises Identification Number before processing the distribution of official ID tags to that producer.

VI. E. US Animal Identification Numbering Systems

VI. E. 1 US Animal Identification Numbering System

By July 2004, APHIS will establish appropriate regulations to implement and control a uniform, national, single US Animal Identification Numbering system to be known as the US Animal Identification Numbering (USAIN) System. The unique USAIN will permit a single animal to be identified with a lifetime number that can be printed on a visual tag, encoded on an RFID transponder or a combination of both. The regulations will specify that APHIS will control the allocation of US Animal Identification Numbers to Certified USAIN Managers. The regulations shall also permit a damaged or lost USAIN Tag to be replaced with another USAIN Tag that should be cross-referenced to the animal's original national number. The USAIN system shall accommodate identification of appropriate species of livestock that can be identified as individual animals so as to permit practical tracking from birth to slaughter in both intrastate and interstate commerce.

- Authorized Use of the USAIN
  Use of the US Animal Identification Number is only authorized when the entity involved is in compliance with the prescribed requirements in Section III. C.1. The use of the USAIN by any entity or individual without full compliance is subject to applicable state and/or federal penalties. The representation and utilization of the animal number with the 840 country code implies full compliance with the prescribed requirements above, and all devices carrying the USAIN are considered official identification by the USDA (see Section VI.F. Official ID Devices in this section for explanation of the US Logo).

  The USAIN shall utilize the code structure defined in ISO 11784: Radio Frequency Identification of Animals (see Section III. Standard for US Animal Identification Number and Appendix F).

- Role of USDA/APHIS regarding the USAIN System

  USDA/APHIS will administer the US Animal Identification Numbering (USAIN) System and have final authority to make decisions regarding the administration of the USAIN System. It is imperative that APHIS implement proper controls that will ensure the uniqueness of the individual USAIN numbers and that necessary information relative to the distribution of the numbers is properly maintained. USDA/APHIS, through a formal Agreement, will only allocate USAINs to Certified USAIN Managers. USDA/APHIS will maintain a record of the numbers allocated to each USAIN Manager.

  USDA/APHIS will also enforce compliance with the USAIN Manager Agreement and, deny or withdraw the approval of an USAIN Manager for noncompliance with the Agreement, including failure to maintain required records, failure to upload required information to the National Animal ID Database or failure to correlate USAIN with premises and/or issuing duplicate numbers. Following a decision to suspend or terminate a noncompliant USAIN Manager, any USAIN not yet assigned to a premises would be retracted and the non-compliant USAIN Manager would immediately be denied access to the National Premises

Repository. The denial or withdrawal of approval of an USAIN Manager could be appealed to USDA/APHIS through the standard appeal process.

Certified USAIN Managers

USAIN identification devices will be distributed through USAIN Managers who will be approved by USDA/APHIS to issue official identification devices with the USAIN. Producers will purchase identification tags from USAIN Managers. USAIN Managers may be state agencies, commercial service providers, DHIA, breed registries, tag companies or other approved entities. USDA/APHIS will develop in consultation with the Oversight Board the requirements for selection and performance of USAIN Managers, including how USAIN Managers are to be routinely evaluated. The performance of USAIN Managers will be periodically reviewed by USDA/APHIS and reported to the Oversight Board. An USAIN Manager must meet the following requirements:

USAIN Managers

Requirements for a Certified USAIN Manager

- Demonstrate a functioning computerized system, compatible with USAIP standards, that ensures the uniqueness of the allocated USAIN.
- Submits the required record of allocated numbers by premises using File: ID#1 to the National Animal ID Database in accordance with prescribed protocols.
- Maintain a database that stores the manufacturer and tag type (SKU number) that each number was imprinted on and/or encoded, in particular if the device was electronic (RFID) and/or visual.
- Capability to validate that only USAIN's allocated to them were actually issued and those issued numbers are printed and/or encoded on officially approved devices.
- Furnish official identification devices to producers as prescribed by the policy on official identification devices.
- Educate customers on the proper use of official identification devices.

Applicants selected by USDA/APHIS to be USAIN Managers will be issued an USAIP Non-producer Participant Number, user name and password to access the National Premises Repository. The level of access for USAIN Managers to the Premises Repository will be determined by USDA/APHIS . They will be required to execute an agreement with USDA/APHIS that sets forth their responsibilities and duties.

VI. E. 2. Transitional Recognition of the American Identification Numbering system and the ISO code structure for radio frequency identification devices

These unique numbering systems, through an interim rule effective January 1, 2004 will be considered official identification during the established transition period when they meet the following requirements.

- Radio Frequency Identification Tags
  RFID eartags will be accepted as official identification devices through the transition period when:
  - the tag attachment contains an ISO transponder (see definition in Appendix A)
  - is attached to the animal's ear with a tamper resistant eartag (one time use)
  - has the RFID code imprinted on the tag

- American Identification Numbers
  Visible identification devices with the American Identification number that meet the following requirements will be accepted as official through the established transition period when:

- the American Identification Number is imprinted on a tamper resistant eartag (one-time use).

When an animal with either number is moved in interstate commerce, the RFID Code or American Identification Number attached to the animal must be recorded on the interstate health certificate to provide a record of the premises that the animal is being moved from.

Note: The transition period is the date the interim regulation becomes effective (target date: January 2004) through July 2006.

VI. E. 3. Phase out of existing official numbering systems

The USDA/APHIS and states will terminate the distribution of all identification tags with the Uniform State Series number by July 1, 2005. The recognition of any number other than the USAIN for unique and official identification of an individual animal within certain species groups will be ended July 1, 2006 (see Section V.B. Implementation by Species Group). After this date, such animals requiring unique individual identification will meet the identification requirements according to the USAIP.

VI. F. Official Identification Devices

USDA/APHIS will promulgate appropriate regulations to require all official ID devices, including individual and lot premises ID tags distributed after July 2005, to utilize the USAIN or premises numbering system.

The USAIN and the U.S. logo will be imprinted on official identification devices. Identification devices will be approved by USDA/APHIS through protocols established by the USAIP Development Team (presented in Section III. Standards) and reviewed by the Oversight Board.

USDA/APHIS and all cooperating state animal ID agencies shall promulgate regulations, as appropriate and/or necessary, that will permit state and federal animal health authorities to enforce the following current provisions of federal law relative to regulations governing the USAIP, so as to prohibit any person from:

- Removing an official identification device or causing the removal of one unless the animal is terminated (exception: unless the USAIN is illegible or the RFID device malfunctions)
- Causing the application of an approved USAIN tag from an animal to another animal
- Causing the application of an official USAIN tag to an animal that is currently carrying an official USAIN tag
- Altering an official USAIN tag to change its national number or to make the national number unreadable
- Selling or providing a tag bearing the US logo unless so authorized

VI.G. Animal Identification Requirements

USDA/APHIS will promulgate appropriate regulations to mandate official identification of all classes of animals (individuals, lots or groups), effective July 2005, moving in interstate commerce. The regulations shall also specify that such movements are reported to the National Animal Identification Database.

USDA/APHIS will also work with states to promulgate appropriate regulations to mandate, effective July 2006, official identification of all livestock (individual, lots or groups) moving in intrastate commerce (see definition in Appendix A) per existing requirements. Such movements are to be reported to the National Animal Identification Database.

VI. H. Producer Responsibility

VI.H.1. Premises Registration

The owner of the premises, or person designated by the owner of the premises must register their location(s) and must keep the required information current. All individuals who own or lease livestock are responsible for having a US Premises Number for the holding location(s) of their livestock.

VI.H.2. Animal Identification

USDA/APHIS shall promulgate appropriate regulations effective July 1, 2006 to place the legal responsibility on the producer to have any animal or lot of animals properly identified under the USAIP. The regulations shall clearly indicate that the producer ~~holding~~[1] the animal(s) at the current premises must be held solely responsible for ensuring that each animal or lot of animals is properly identified when required prior to its movement. Producers are urged to utilize identification methods described in the USAIP as soon they become available.

When proper identification requires an USAIN tag, the tag must be properly attached to the individual animal prior to the animal leaving its current premises or at the location of an approved tagging site.

The new regulations will permit approved tagging sites for producers to utilize if facilities are not available to permit animals to be properly identified at current premises, provided such movement is approved by the appropriate state animal health authority. An approved tagging site is a location that has applied to and been approved by USDA/APHIS to provide this service. In such situations, animals must be moved to the authorized facility directly from their herd of origin without commingling with other animals.

Auction markets are not required to tag animals that arrive at their facility untagged; however, they are not prevented from applying to become an approved tagging site if they desire.

[1] *Pertains to the individual who owns the animal. For leased animals the person leasing the animal is responsible.*

VI. I. Summary of Required Rules and/or Regulations

The following chart summarizes actions required to establish appropriate rules and regulations.

Summary of Regulation Requirements

Issue	Date		Comments
	Preliminary Rule	CFR	
Numbering Systems			
Premises	January 2004	TBD	
Non-producer Participants	January 2004	TBD	Required to approve individual who will participate in the administration of the USAIP
Group/Lot ID	January 2004	TBD	
US Animal Identification Number (USAIN)	January 2004	TBD	
Official Devices			
Recognize USAIN	January 2004	TBD	
Recognize RFID technology	January 2004	TBD	
Premises ID Required		July 1, 2004	
Interstate Commerce of Livestock - ID'd with USAIN or Group/Lot ID		July 1,2005	Require reporting of interstate commerce movements
Intrastate Commerce of Livestock - ID'd with USAIN or Group/Lot ID		July 1, 2006	Require reporting of intrastate commerce movements
Producer Compliance		July 1, 2006	

VI. H. USAIP Budget

Earlier this year, Year One funds were requested through the Commodity Credit Corporation (CCC) for initial financial support of the USAIP. These funds, pending their assignment, will be utilized on priorities to establish certain foundation requirements and to support other activities of the program. These priorities included:

- Communication Plan
  - Development of communications tools including fact sheets, FAQ's and presentations; development process to take the plan to the stakeholders'; develop a functional website for information sharing/distribution.

- Governance
  - Obtain necessary resources to start rulemaking procedures, carry out support functions, personnel to manage the national database infrastructure.
  - Funds to support states in developing enabling legislation to support the implementation of premises identification.

- Information Technology
  - Development of uniform State Premises System, National Premises Repository and Animal Identification Numbering Allocation System.
  - Funds for states to implement premises identification within their area.

- Pilot Projects
  - Projects in key states and with different species to test the system. Assessment of current systems to document lessons learned in previous implementation processes.

- Transition
  - Begin to build RFID infrastructure in key locations (markets, slaughter establishments, border crossings, and field locations).
  - Furnish RFID tags, applicators and supplies to producers in key locations.
  - Field staff to administer programs.

The following chart provides a broad overview of the dollars required to implement the USAIP following the initial start up explained above. These projections were based on some basic guidelines and assumptions. It is acknowledged that more specifics to the final implementation plan will provide more details to direct the preparation of final budget. The following budget is provided as an estimate to reflect anticipated financial requirements.

USAIP - Preliminary Projection for Financial Requirements

	Year 2	Year 3	Year 4	Year 5	Year 6
Information System					
System Development	$5,000,000	$4,000,000	$1,000,000		
System Maintenance	$10,000	$10,000	$10,000	$10,000	$10,000
Support Resources	$5,043,533	$10,087,067	$15,130,600	$15,130,600	$15,130,600
Sub Total	$10,053,533	$14,097,067	$16,140,600	$15,140,600	$15,140,600
Data Collection Infrastructure					
Market readers	$16,380,000	$3,931,200	$3,938,000	$3,770,800	$3,770,800
Slaughter readers	$2,083,600	$3,182,433	$1,309,400	$1,309,400	$1,114,600
Field readers	$680,000	$966,000	$1,252,000	$858,000	$858,000
Sub Total	$19,143,600	$8,079,633	$6,499,400	$5,938,200	$5,743,400
ID Devices					
Tags	$34,319,082	$66,972,541	$99,626,000	$99,626,000	$99,626,000
Applicators, etc.	$7,318,600	$9,148,250	$9,148,250	$1,829,650	$1,829,650
Sub Total	$41,637,682	$76,120,791	$108,774,250	$101,455,650	$101,455,650
Total	**$70,834,815**	**$98,297,491**	**$131,414,250**	**$122,534,450**	**$122,339,650**

Documentation and the references that support the above projections will be presented at future stakeholder meetings (including the 2003 USAHA meeting).

APPENDIX

Appendix A. Glossary of Terms

American Identification Number
The American Identification Number was adopted in 1998 by the Council on Dairy Cattle Breeding to facilitate developing national programs that not only enhance genetic progress but also animal disease control and eradication. The number is defined as a 12 character field prefixed with "USA". The American ID number, as an alphanumeric field, cannot be encoded in the ISO transponder. The American Identification Numbering system will be phased out (or merged with) the US Animal Identification Number as it is implemented.

Animals
Consist of those species shown in the species field name listed in section III.A.3.

Breeding Cattle
Sexually intact cattle of either sex, with the exception of veal calves and heifers moving direct to a terminal feedlot.

Check Digit
A decimal (or alphanumeric) digit added to a number for the purpose of detecting the sorts of errors humans typically make on data entry.

Country code
A 3-digit numeric code representing the name of a country in accordance with ISO 3166.

Electronic Identification (EID)
An identification method that utilizes electronic technology, including, but not limited to bar codes, 2-D symbology, and radio frequency.

US Group/Lot Identification Number
The identification number used to uniquely identify a "unit of animals" of the same species that is managed together as one group throughout the preharvest production chain.

Individual Animal Identification
A means of identification that provides the capability to differentiate one animal from another. Official individual animal identification uses methods that meet the definition of official identification.

Identification Methods
A means of identifying an animal, including ear tags, brands, breed registry certificates, etc.

Intrastate Movement
Movement that does not cross a state line and does not meet criteria for entering interstate commerce.

Intrastate Commerce
Movement that involves commingling or change of ownership, but does not cross a state line nor meet criteria for entering interstate commerce.

ISO
International Organization of Standards.

ISO Transponder
RFID device that transmits its transponder code according to ISO 11784/11785 when activated by an ISO transceiver and that has been evaluated and approved for conforming to these standards by the International Committee on Animal Recording

ISO Transceiver (Reader)
Transceiver that reads at least both ISO FDX-B and ISO HDX transponders as defined in ISO 11784/11785.

Mandatory Identification
A state and/or federal identification requirement that defines which livestock must be identified according to established protocols.

National Identification System
An identification system that, through established standards and defined data elements, allows for the compatibility of systems while providing the efficient availability of agreed-to information across each segment of the industry.

Official identification Device
An identification device that is approved by USDA/APHIS for use in the USAIP. Official identification devices carry the US Shield and meet the established standards.

Official Identification
A method of identification defined in the CFR that is acceptable when the USAIP requires the identification of an animal or group/lot of animals.

Official Identification Numbers
Numbering systems recognized in the CFR; alpha-numeric National Uniform Ear tagging System or valid premises identification number that is used in conjunction with the producer's livestock production numbering system. The USAIP directs the establishment of the US Animal Identification Number as the sole official identification number over an agreed-to period of time.

Premises
A premises is a location as determined by the State Animal Health Official or Area Veterinarian in Charge in consultation with the producer or operator of an entity that participates in animal production or commerce. The incorporation of premises in the USAIP provides the ability to determine the location where an animal(s) was at a certain location for a given duration.

Transponder code
Code as programmed in the transponder and defined in ISO 11784 (Table 1) and ISO 11785.

National Premises Identification System
A means of uniquely identifying a premises and associating it with agreed to information on an information system, including contact information when communication to the premises is necessary.

Non-producer Participant
A person or entity who will engage in the USAIP in one or more designated roles, that in many instances will require that they provide data to the national identification database. Such entities include USAIN Manager, USAIN Tag Distributor, Animal Health Official, Diagnostic Laboratory, etc.

Radio Frequency Identification (RFID)
An ID device that utilizes radio frequency technology. The RFID device or method of identification includes ear tags, bolus, implants (inject), and tag attachments (transponders applied during the tagging process).

US Animal Identification Plan (USAIP)
The animal identification plan for the United States, that through collaboration of industry and government, provides the infrastructure to support animal disease surveillance, monitoring, control and eradication.

US Animal Identification Number (USAIN)
The US Animal Identification Number (USAIN) will evolve into the sole national numbering system for the official identification of individual animals in the United States. The format contains 15 digits with the first three being the country code (840 for the United States). The USAIN follows the ISO Standard for Radio Frequency of Animals; thus, can be encoded in an ISO transponder or printed on a visual tag.

USAIN Distributor
A person or entity who is authorized to distribute USAIN Tags.

USAIN Manager

A person or entity that is certified by USDA/APHIS to receive US Animal Identification Numbers. Additionally, they oversee the distribution of USAIN Tags with the animal numbers allocated to them in accordance with the prescribed requirements.

Note: USAIN Managers can be tag manufacturers that sell identification devices direct to a producer or through their distributor. In some cases, other entities such a state departments of agriculture, breed associations, DHIA, service providers, veterinarian clinics, etc., will be ID Tag Distributors that will be USAIN Managers as well and perform the function referred to as an ID Tag Distributor.

US Premises Identification Number
The official premises identification number for the United States. The number is nationally unique and has no meaning itself. The premises number is associated with an address or legal land description. The field specification for the Premises Identification Number is:

- 7 characters (right most character is a check digit)

USAIN Tag
Official identification devices that have the US Animal Identification Number (USAIN) printed or encoded on the identification device (normally a visible eartag or an RFID tag attachment). Only official identification devices may carry the US Shield.

Write Once Read Many (WORM)
Distinguishing a transponder that can be partly or totally programmed once by the user, and thereafter only read.

Appendix B. File Format Descriptions

- **Premises Upload Record Format**

The following format describes the file that each state/regional premises system will utilize to update records to the national premises repository. The file naming convention is defined as:

Non-producer Participant ID number+YYYYMMDDHHMMSS time stamp and .PRM file extension.

For example: X23456720030801032312.PRM

Premises Upload Record Format (File: Prem #1)

File Header Record (One Record)				
No.	Field Description	Data Type	Size	Example
1	Non-producer Participant Number	Character	17	X234567
2	Transmission Date	Numeric	12	YYYYMMDDHHMM
3	Record Count	Numeric	8	100
4	E-mail Address	Character	60	Bill.smith@Dataprovider.com

Record Description (Multiple Records)				
No.	Field Description	Data Type	Size	Example
1	US Premises ID Number	Character	7	T234W67
2	Name of Entity	Character	30	
3	Owner or Appropriate Contact Person	Character	30	
4	Street Address	Character	30	
5	City	Character	20	
6	State	Character	2	
7	Zip/Postal Code	Numeric	9	
8	Operation Type	Character	1	(M for Market, etc.)
9	Contact Phone Number	Numeric	15	
10	Date Activated	Character	8	YYYYMMDD
11	Date Retired	Character	8	YYYYMMDD
12	Reason Retired	Numeric	2	

- **USAIN/Animal Transaction Record**

  Animal records submitted to the National Animal Identification database will utilize the following file format specifications. The file naming convention is defined as:

  Non-producer Participant ID number+YYYYMMDDHHMMSS time stamp and .IND file extension. For example: X23456720030801032312.IND

USAIN/Animal Transaction Record (File: ID #1)

File Header Record (One Record)

No	Field Description	Data Type	Size	Example
1	Non-producer Participant Number	Character	7	X123456
2	Transmission Date	Numeric	12	YYYYMMDDHHMM
3	Record Count	Numeric	8	100
4	E-mail Address	Character	60	bill.smith@Dataprovider.com

Record Description (Multiple Records)

Field No	Field Description	Data Type	Size	Required	Example
1	Event Type Code	Numeric	2	Y	1
2	Sighting/Reporting Premise ID	Character	7	Y	
3	Source/Destination Premise ID	Character	7	N	
4	Event Date & Time	Numeric	12	Y	YYYYMMDDHHMM 200308011223
5	USAIN Number Used	Boolean	1	Y	0 (False) / 1 (True, then Field 6 is required, default)
6	Animal ID number	Numeric	15	Y	Until USAIN number is the only approved animal ID identifier, Other official ID numbers need to be reported in fields 15 thru 18
7	Species	Character	3	N	
8	ID Electronically Read	Boolean	1	Y	0 (False default) / 1 (True)
9	Animal Date of Birth	Character	8	N	YYYYMMDD 20020101
10	Age of Animal	Character	3	N	(M)onth, (D)ay, (Y)ear i.e. M11
11	Sex	Character	1	N	(M)ale, (F)emale, (C)astrated/neutered male, (S)payed/neutered female
12	Breed of Animal	Character	2	N	See document Breed codes US and Can1.pdf
13	Remarks	Character	50	N	Description/other comments
14	Status	Character	1	N	(C)orrection
15	Alternate Animal ID 1	Character	17	N	Alternate pre-existing official Identification number if USAIN not available, Lot ID number if animal has USAIN number and was moved out of a lot, old USAIN number if tag replaced
16	Alternate Animal ID Type 1	Character	1	N	(A)merican ID, (U)SDA eartag, (R)FID, (B)reed registry number, (L)ot number, (T)attoo, required if Alternate ID (field 15) is provided, R(E)eplacement USAIN number if event code 6 used
17	Alternate Animal ID 2	Character	17	N	Second alternate pre-existing official Identification number if USAIN not available, or Lot ID number if animal has USAIN number and was moved out of a lot
18	Alternate Animal ID Type 2	Character	1	N	(A)merican ID, (U)SDA eartag, (R)FID, (B)reed registry number, (L)ot number, (T)attoo,required if Alternate ID (field 17) is provided

Record format: Comma delimited, double quotes around fields that include a comma terminate a record with an EOL character and the file with an EOF character.

Animal Event Codes

Event Code #	Description
1	Tag allocated – National USAIN number is allocated to a premises
2	Tag applied - National Animal ID tag is applied to an animal.
3	Moved in – Animal is moved into a premise
4	Moved out – Animal is moved out of a premise
5	Lost Tag – New tag is applied to an animal that lost a tag and previous USAIN is unknown
6	Replaced Tag or Re-Tagged – New tag is applied to an animal that lost a tag and previous USAIN is known
7	Imported – Animal is imported into the U.S.
8	Exported – Animal is exported out of the U.S.
9	Sighting – Animal has a confirmed sighting at a location, no movement has occurred. (Ex: vet sighting)
10	Slaughtered – Animal was sent to slaughter.
11	Died – Animal died of natural causes or euthanized at the farm/ranch
12	Tag retired – Tag retired by producer, packing house, etc.
13	Animal Missing (lost stolen, etc)
14	ICVI – Certificate of veterinary inspection

Field Description Explanations

- Non-producer Participant Number
  The Non-producer Participant number is an identifier code for the organization that submitted the information to the National system. In case errors occur in processing the data the organization submitting the data can be contacted. A Non-producer Participant number needs to be obtained from USDA/APHIS before an organization is able to upload information to the National system.

- Transmission Date
  The date the file was created and transmitted to the National system.

- Record Count
  The number of records that should be included in the file. This provides an additional check to indicate the file was transmitted in its entirety.

- E-mail address
  This should be the e-mail address of the person who needs to be contacted in regards to any data errors when processing the file.

- Event Type Code
  Any event that identifies the geographical location of an animal at a point in time is considered a sighting or movement event.

- Sighting Premise ID or Reporting Premise ID
  Premise where the animal sighting/movement has taken place. The premises where the animal was last seen.

- Source/Destination Premise ID
  If an animal moves from one premise to another premise and the sighting/reporting premise knows the source or destination premise ID, this information can be provided in the Source/Destination Premise ID field. If the event type is "moved in", this field could be used to report the source premise where the animal came from. If the event type was "moved out", this field could be used to report where the animal was sent.

- ID electronically read
  Identifies if the event that was recorded was based on the animal ID being read through an RFID reader.

- Status
  Indicator if the record for this animal event is a correction to a previous record that was uploaded.

- Alternate Animal ID
  Up to two pre-existing official ID numbers such as American ID, USDA series numbers, RFID and Breed registry numbers can be used during the transition period if an USAIN number is not yet available. If an alternate US Animal Identification Number is used, an alternate animal ID type code must be submitted to define the type of alternate ID. The Alternate ID and identifier together should create a unique ID for the animal. In the case an animal looses a tag, this field can be used to report the previous USAIN number of the animal. The alternate ID type code must reflect an "R" to indicate the replaced USAIN number.
  The alternate ID and type code fields will be phased out in the future and these fields will only be used to report the USAIN number of an animal that lost a tag.

  The secondary use of the alternate animal ID field requires that if an animal was previously assigned to a Lot ID and received an individual animal ID (USAIN number), the Lot ID# the animal was originally assigned to needs to be supplied in the Alternate animal ID field, and the Alternate animal ID type field needs to reflect that the number entered is a Lot ID.

- **Group/Lot Movement Record**

Group/Lot records submitted to the National Animal Identification database will utilize the following file format specifications. The file naming convention is defined as:

Non-producer Participant ID number+YYYYMMDDHHMMSS time stamp and .LOT file extension.

For example: X23456720030801032312.LOT

Group/Lot Movement Record Format(File: ID #2)

File Header Record (One Record)

No.	Field Description	Data Type	Size	Example
1	Non-producer Participant Number (source of data)	Character	7	X123456
2	Transmission Date	Numeric	12	YYYYMMDDHHMM
3	Record Count	Numeric	8	100
4	E-mail Address	Character	60	bill.smith@Dataprovider.com

Record Description (Multiple Records)

Field	Field Description	Data Type	Size	Required	Example
1	Event Type Code	Numeric	2	Y	1
2	Premise ID	Character	7	Y (Required when event code is 2, 3, or 4)	
3	Event Date & Time	Numeric	12	Y	YYYYMMDDHHMM 200308011223
4	Lot ID number	Character	13	Y	G/L ID number is comprised of Premises ID and date the lot was established
5	G/L Subset Identifier	Character	30	N	Used to identify subset such as a barn
6	Group Type	Character	1	Y	(S)tatic, (D)ynamic
7	Species	Character	3	Y	
8	Event Remark	Character	50	N	
9	Status	Character	1	N	(C)orrection

Record format: Comma delimited, double quotes around fields that include a comma terminate a record with an EOL character and the file with an EOF character.

Group/Lot Event Codes

Event Code #	Description
1	Begin Group/Lot, Group/Lot of animals was established at a premise
2	Moved Group/Lot in, Group/Lot of animals was moved into a premise
3	Moved Group/Lot out, Group/Lot of animals moved out of a premise
4	Sighting Lot has a confirmed sighting at a location, no movement has occurred (i.e. vet sighting)
5	End Group/Lot, Group/Lot inventory is zero

Appendix C. Premise Identification Number Allocator

The Premises Identification Number Allocator (Premises Allocator) is a secured internet system that provides the allocation of the nationally unique premises numbers for a specific location in the U.S. State departments of agriculture with a USDA certified Premises Identification System will have authorized access to the Premises ID Allocator. The development and maintenance of the Premises ID Allocator will be administered by the USDA.

Note: As explained in the Premises Identification section, the administration and management of the premises number and associated information is the responsibility of each state Department of Agriculture (or as established by the appropriate governing body within the state).

- **Goal**

The goal of the Premises Allocator is to validate a location using an address or other legal land description and to allocate a national premises number to the location. The single allocation system ensures the uniqueness of a premises identification number for the entire United States and should minimize the allocation of multiple numbers to the same location.

- **Acquiring a Premises Identification Number**

Two means of acquiring a Premises Identification Number is provided. One option is for the state administrator to access the system direct through the established URL. The second is for the state to have their premises system interfaced with the Premises Allocator.

In either situation, premises (address) information is submitted by the authorized user or interfaced state premises system. A National Premises Identification Number is returned by the Allocator when a match is made between the submitted address and the national postal system. In situations where an address cannot be validated (no legal address matches) a message will be returned indicating that no address "match" is on record. A procedure to handle situations when no match is found will allow the state premises administrator to manually obtain a US Premises ID Number if the submitted information was in fact correct.

Accessing the Premises Allocator without a system interface

Authorized users may log on to the Premises Allocator System at the established URL. The user will enter the required information into the Premises Allocator screens. When an address match is found, a premises number may be requested by the user. The premises number returned and displayed on the Premises Allocator screen will then be entered into the state system.

Interface between State Premises System and the Premise ID Allocator

A seamless "behind the scenes" standardized interface will be established for the state premises systems in which servlets are used to obtain a premise number. This process will be done in two steps.

Step 1) Address validation
The state premises system will supply an address via a servlet for a premises. The table below lists the address items that can be supplied, including the mandatory items.

Field Descriptions submitted to Premises Allocator

Field Name	Format	Required	Comments
Address Number	Character	N	Primary address number, can contain 0-9, a-z/- and space
Pre Directional	Character	N	Select S/N/E/W/SW/SE/NE/NW
Street Name	Character	Y	Can contain a-z and space
Street Suffix	Character	N	Select from Road, Lane, Avenue, etc.
Post Directional	Character	N	Select S/N/E/W/SW/SE/NE/NW
Secondary Address Identifier	Character	N	Select APT/DEPT/FL/LOT/RM/STE/UNIT/:/#
Secondary Address Range	Character	N	Can contain 0-9, a-z/- and space
City	Character	N	Can contain a-z and space
State	Character	N	Select from dropdown
Zip	Numeric	Y	Can contain 0-9, secondary 4 digits are optional

The Premise Allocator will validate the address through a comparison to existing U.S. mail addresses. If a match is found on the submitted address the Allocator will first return the postal address that is found as it is on record in the postal address system. If no match is found an exception or error report will be returned. The user requesting a premise ID will have to resubmit a corrected address or contact the local Premises ID Administrator to resolve the conflict.

Step 2) Obtaining the premises identification number
Assuming an address match is found in the validation process, the user will confirm that the returned address is correct. When the user confirms the address is correct a second servlet will be used to obtain the premise ID number. If a premise ID number was previously allocated to the submitted address, the original premise ID number will be returned to the local system.

Administering "no address match" scenarios

A key component is to validate the address against the national postal system. In the cases when an address cannot be found, a "no address match" exception report will be returned to the State Premises System. The user has the option to change the address that was originally submitted for resubmitting to the Premises Allocator. In situations where the user provides evidence that the address is correct, the state premises administrator can verify its correctness and use the online Premises Allocator interface with CEAH to obtain a premises ID through the exception handling processes.

Converting Premises systems

For states to conform to the national standard, it will be key that states that have a premises ID system in place need to convert previously issued premises ID's to the new format. For states to convert over, it will be necessary to allow the premises allocator to process a file that includes address information for previously issued premises ID. A file will need to be returned that includes a cross reference between the old premises ID and the newly assigned premises ID.

It will be the states responsibility to address any exceptions. The most likely exceptions will be that an address is invalid, or a premises ID has been previously allocated to the same address. States will need to merge recorded information associated with duplicate premises ID to resolve the exceptions. It is recommended that states develop an infra-structure (including IT and human resources) that will manage the exceptions that are returned to them. This might require setting up some temporary database tables to store exceptions and have the ability to re-submit any corrected data to obtain a premises ID.

Below is a recommended file layout to submit and obtain premises ID in the new format:

Premises Conversion File Format

Field Name	Format	Required	Comments
Current Premise ID	Character	Y	Current State US Premises ID Number (MI1234)
Address Number	Character	N	Primary address number, can contain 0-9, a-z/- and space
Pre Directional	Character	N	Select S/N/E/W/SW/SE/NE/NW
Street Name	Character	Y	Can contain a-z and space
Street Suffix	Character	N	Select from Road, Lane, Avenue, etc
Post Directional	Character	N	Select S/N/E/W/SW/SE/NE/NW
Secondary Address Identifier	Character	N	Select APT/DEPT/FL/LOT/RM/STE/UNIT/*/#
Secondary Address Range	Character	N	Can contain 0-9, a-z/- and space
City	Character	N	Can contain a-z and space
State	Character	N	Select from dropdown
Zip	Numeric	Y	Can contain 0-9, secondary 4 digits are optional
New Premises ID	Character	Y	New national US Premises ID Number (A234567)
Exception	Character	N	Used when no valid address or land description met requirements of Premises Allocator

The following illustrates the flow of data between the Prem Allocator and the state system.

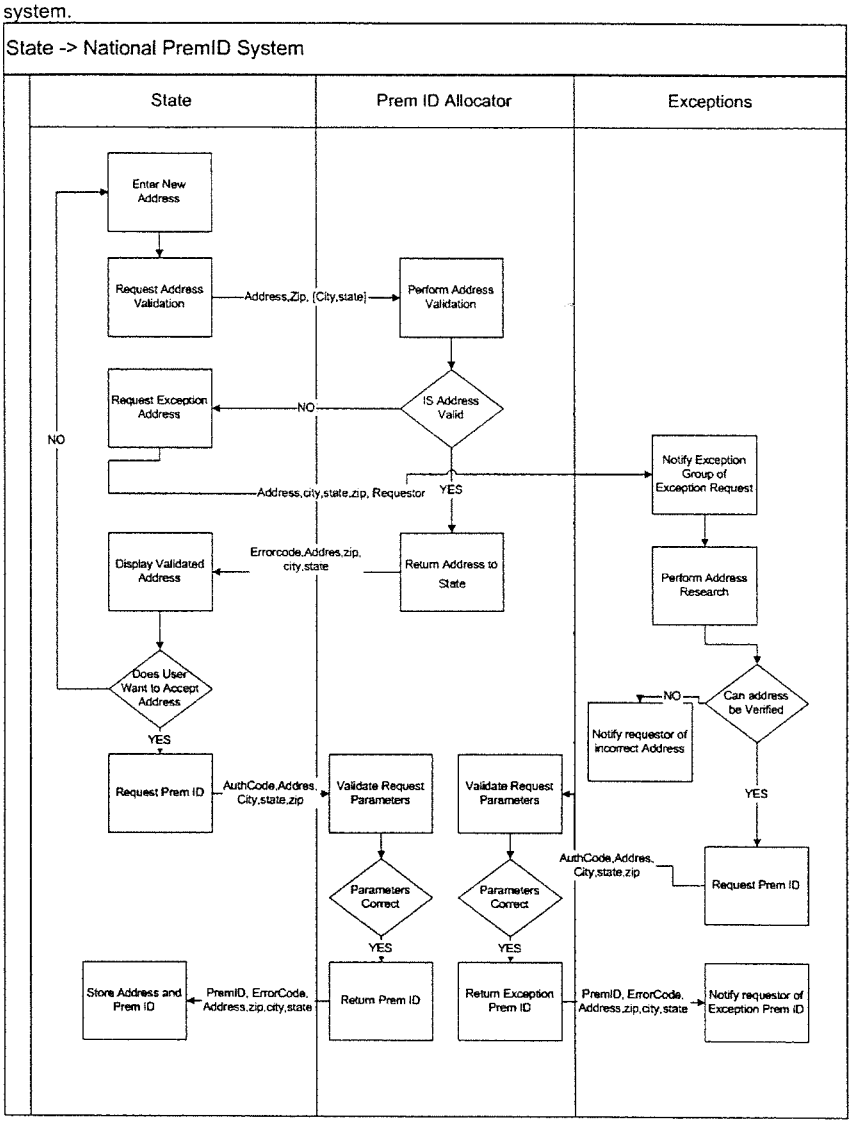

Appendix D. Non-producer Participant and USAIN allocation data

Data items to be collected when a Non-producer Participant is enrolled:

Non-producer Participant Associated Data				
Record Description (Multiple Records)				
No.	Field Description	Data Type	Size	Example
1	Non-producer Participant ID Number	Character	7	T234W67
2	Name of Entity	Character	30	
3	Owner or Appropriate Contact Person	Character	30	
4	Street Address	Character	30	
5	City	Character	20	
6	State	Character	2	
7	Zip/Postal Code	Numeric	9	
8	Non-producer Participant Type	Numeric	2	(1. Federal Animal Health official, 2. Accredited veterinarian, 3. USAIN Manager, etc.)
9	Contact Phone Number	Numeric	15	
10	Secondary Phone Number	Numeric	15	
11	E-mail Address	Character	30	
10	Premises states that can be accessed *	Character	2	US for all states, or for example NM
11	Premises access security level	Numeric	1	0..3 (0 is no access)
12	Animal access security level	Numeric	1	??
13	Date Activated	Character	8	YYYYMMDD
14	Date Inactivated	Character	8	YYYYMMDD
15	Reason Inactivated	Numeric	2	

* A Non-producer Participant can be granted access to multiple states, so this could require multiple records.

Security access data

Data items to be collected to grant a Non-producer Participant access to the National premises system:

User Access Security Login/Password				
Record Description (Multiple Records)				
No.	Field Description	Data Type	Size	Example
1	Non-producer Participant ID Number	Character	7	T234W67
2	User full name*	Character	30	
3	User Name*	Character	12	
4	Password*	Character (encrypted)	12	
5	Date Activated*	Character	8	YYYYMMDD
6	Date Inactivated*	Character	8	YYYYMMDD

* Multiple users can be associated with a Non-producer Participant

USAIN allocation data

Data Items to be collected by USDA/APHIS to store USAIN allocations to Non-producer Participants.

USAIN Allocation Data				
Record Description (Multiple Records)				
No.	Field Description	Data Type	Size	Example
1	Non-producer Participant ID Number	Character	7	T234W67
2	Start USAIN Number*	Numeric	15	
3	End USAIN Number*	Numeric	15	
4	Date Allocated*	Character	8	YYYYMMDD

* A Non-producer Participant can receive multiple series of USAIN numbers

Appendix E. ISO 7064 Mod 37,2 Calculation of Alphanumeric Check digit

This Appendix shows how to calculate the check character for a given number. The calculation is based on the donation number string excluding the leading '=' symbol and the flag characters.

The steps in the process are as follows:

(1) For each character in the string determine its check value as required by ISO 7064 (see Table I).

(2) For each character determine its weighted check value by multiplying the check value from (1) by the nth power of 2 where n is the position of the character from the right-hand end of the string.

(3) Sum the weighted check values from (2).

(4) Find the modulus 37 value of the sum from (3).

(5) Subtract the value obtained in (4) from 38.

(6) Find the modulus 37 value of the result of (5). This is the 37,2 check sum.

The calculated check sum is used to generate both the barcode check characters used in the flag positions of the ISBT128 barcode and the eye-readable check digit character. The barcode check characters are determined by adding 60 to the check sum. The eye-readable check digit character is determined by cross referencing the check sum to Table I.

Table I Mapping from characters to ISO 7064 check values

Char	0	1	2	3	4	5	6	7	8	9	A	B	C	D
Value	0	1	2	3	4	5	6	7	8	9	10	11	12	13
Char	E	F	G	H	I	J	K	L	M	N	O	P	Q	R
Value	14	15	16	17	18	19	20	21	22	23	24	25	26	27
Char	S	T	U	V	W	X	Y	Z	see below					
Value	28	29	30	31	32	33	34	35	36					

Table II Example of calculating a check digit

Donation number G65432				
Position from right (n)	**n 2**	**Character**	**ISO7064 value (step 1)**	**Weighted value (step 2)**
6	64	G	16	1024
5	32	6	6	192
4	16	5	5	80
3	8	4	4	32
2	4	3	3	12
1	2	2	2	4
Step 3		Sum of weighted values		1344
Step 4		Sum mod 37		12
Step 5		Subtract from 38		16
Step 6		Mod 37		16
ISO 37,2 check sum =				16
barcode check digit characters =				76
eye-readable check digit =				G

Appendix F. International Standard - Radio frequency identification of animals

ISO 11784 Radio frequency identification of animals - Code Structure

1. Scope

This International Standard specifies the structure of the radio frequency (RF) identification code for animals.

RF identification of animals requires that the bits transmitted by a transponder are interpretable by a transceiver. Usually the bit stream contains data bits, defining the identification code and a number of bits to ensure correct reception of the data bits. This International Standard specifies the structure of the identification code.

This International Standard does not specify the characteristics of the transmission protocols between transponder and transceiver. These characteristics are the subject of ISO 11785.

Note – A procedure for the allocation of the manufacturer's code is under study.

2. Conformance

The unique individual identification codes transmitted by a transponder are in conformance with this International Standard provided they meet the requirements of clause 5.

3. Normative reference

The following standard contains provisions which, through reference in this text, constitute provisions of this International Standard. At the time of publication, the edition indicated was valid. All standards are subject to revision, and parties to agreements based on this International Standard are encouraged to investigate the possibility of applying the most recent edition of the standard indicated below. Members of IEC and ISO maintain registers of currently valid International Standards.

ISO 3166-1993, *Codes for the representation of names of countries.*

4. Definitions

4.1 **animal code**: Bit pattern to identify an animal.
4.2 **bit pattern**: Sequence of binary digits or bits [0,1].
4.3 **code field**: Group of bits in the identification code with a specific meaning.
4.4 **country code**: Bit pattern to define the country where the transponder was issued.
4.5 **data block**: Additional group of bits with a specific meaning.
4.6 **flag**: Single bit with a specific meaning.
4.7 **identification code**: Part of the code that is used for identification (control codes such as header, trailer and checksum are excluded).
4.8 **manufacturer's code**: Bit pattern identifying the manufacturer of the transponder.
4.9 **national identification code**: Code field with a unique number within a country.
4.10 **transceiver**: Device used to communicate with a transponder.
4.11 **transponder**: Device which transmits its stored information when activated by a transceiver and may be able to store new information.

5. Description of code structure

The code in the transponder is split up into a number of code fields, each with its own meaning. Each field is coded in natural binary with the high-order bit being leftmost. The structure of the code shall be as specified in Table 1. Bit number 1 in the code is the most significant bit (MSB), bit number 64 is the least significant bit (LSB).

The combination of country code and national identification code provides a unique worldwide identification number.

Table 1 - Code Structure

Bit No.	Information	Combinations	Description
1	Flag for animal (1) or non-animal (0) application.	2	This bit signals whether the transponder is used for animal identification or not. In all animal applications this bit shall be 1.
2 - 15	Reserved field.	16 384	Fourteen bits of code are reserved for future use.
16	Flag indicating the existence of a data block (1) or no data block (0).	2	This bit signals that additional data is to be received (e.g., physiological data, measured by a device which combines identification and monitoring). This bit shall be 1 if additional information is appended to the identification code, otherwise it shall be 0.
17 - 26	ISO 3166 numeric-3 country code.	1 024	Country codes from 900 to 998 may be used to refer to individual manufacturers of transponders. Country code 999 is used to indicate that the transponder is a test transponder and need not contain a unique identification number.
27 - 64	National identification code.	274 877 906 944	Unique number within a country.

Notes:

1. The method to distinguish between animal and non-animal applications using bit No. 1 allows the code structure to be recognized electronically. However, this requires that future standards on RF identification in other fields will adhere to this convention.
2. The length of the national identification code was chosen to have enough combinations available for all animals in a large country. Moreover, the uniqueness of a code is expected to be maintained over thirty years.
3. It is a national responsibility to ensure the uniqueness of the national identification code. If necessary, number series may be allocated to species and/or manufacturers, but this will not be standardized. Ideally every country should maintain a central database in which all issued codes are stored, together with a reference to the database where the information concerning the associated animal can be retrieved.

ISO 11785 Radio frequency identification of animals - Technical Concept (Abbreviated)

1. Scope

This International Standard specifies how a transponder is activated and how the stored information is transferred to a transceiver.

2. Conformance

Transponders are in conformance with this International Standard provided they meet the requirements given in clause 6 of ISO 11785. Transceivers are in conformance with this International Standard provided they meet the requirements given in clause 6 and annex A, if the latter is applicable.

Table 1. Summary of the FDX and HDX Systems

Parameter	FDX System	HDX System
Activation frequency	134.2 kHz	134.2 kHz
Modulation	AM_PSK	FSK
Return frequencies	129.0 kHz to 133.2 kHz 135.2 kHz to 139.4 kHz	124.2 kHz 134.2 kHz (0)
Encoding	Modified DBP	NRZ
Bit rate	4 194 bit/s	7 762.5 bits/s (1) 8 387.5 bits/s (0)
Telegram structure:		
- Header	11	8
- Identification code	64	64
- Error detection code	16	16
- Trailer	24	24
- Control bits	13	-

Appendix G. Error Handling Procedures

When either the Premises record, Animal record, or Lot ID record are submitted to the National database, error checking will be done on the record prior to adding to the database. If the record fails to pass the error checking, an error record will be created and returned to the sender. The error record will contain the submitted record, along with a 4 digit error code(s) and a date and time stamp (GMT) of when the record was received (or processed) at the end of the record. To limit the number of error codes, the maximum number of error codes that will be returned is limited to 5, and will be added to the end of the submitted record and be delimited with a comma. (example, 2001,2005,2010,..) The error codes will be listed in order of importance, so the most important ones to appear first.

Once the complete file is processed, the file with errors will be made available to the sender. An email will be sent to the organization that sent the file summarizing actions of the record. The error file will not be attached to the e-mail. The e-mail message will contain the following information;

- One summary per header record
- Process Date
- Number of records submitted,
- Number of records containing errors.
- Summary of type of records
- Percentage of records with errors, and useable records
- Name of the file containing errors.
- Hyperlink link is provided to the error file
- Hyper link to list of error descriptions

To ensure e-mail messages can be returned, for each file type the header records of each file must contain a valid email address of the sender.

The error records to be available via HTTP for each organization that submitted them. Error files will be available for 90 days, then they will be archived. To access the HTTP site, each organization submitting records will need User ID and Passwords to download error files. The sender can download the error records at their convenience and take appropriate action.

The following file naming convention will be used to return error file. Each file name will include the initial uploaded file name with a different file extension. Depending on the type of file that is uploaded, the following file extensions will be used:

- ".EPR" for premises records
- ".ELO" for lot records
- ".EIN" for animal records

Error Codes

The format of the error codes is based on a 4 digit numeric code. The error code is constructed as follows;

Pos 1; Grouping of error records;
1 = Premise Upload Records sent to the National Premises Repository DB from the State Premises DB.

2 = USAIN/Animal Transaction Records sent to the National Animal ID DB.
3 = Lot ID Transaction Records sent to the National Animal ID DB.

Pos 2-4: three digit error code (numbering within the type of error)
Code Example: 1003 = Error code #3 under the Premise errors.
2003 = Error code #3 under Animal errors.
10 error code numbers were skipped at a time per category, so new codes can be inserted at a later date. Description of the error codes were kept as specific and self explanatory as possible.

Types of errors

When premises information is processed, the following is assumed:

- Premise ID address is validated.
- Premise ID is validated
- The states are in control of the data they submit, and the National Premises Repository overwrites or adds any data they get from a state based on Premise ID. The address will not be checked against the postal office database.

Note: for date checking;
Format Incorrect- indicates the date is too long or contains alpha characters.
Future date- indicates the date has not happened yet.
Invalid- indicated that the;
- Year is outside of an acceptable range of within the past 30 years.
- Month is outside of the 01-12 range
- Day is outside of the range for that month. Example: Jan must be 1-31...

Appendix H.

Secretary Veneman submits statement to Gilmore Commission regarding USDA's role in protecting U.S. from terrorism.

Chairman Gilmore and distinguished members of the Commission, thank you for the opportunity to share the Department of Agriculture's (USDA) role in protecting our country from terrorism with the Advisory Panel to Assess Domestic Response Capabilities for Terrorism Involving Weapons of Mass Destruction.

When the Gilmore Commission was established four years ago, few Americans foresaw the profound way that terrorism could affect us, and very few understood the potential impact of weapons of mass destruction. This Commission, however, has been on the forefront of both of these issues, which are now central not only to American foreign policy, but also to the work of every department within the Federal government. I commend the Commission for its role in heightening awareness of these issues, for bringing more accountability to the government and for its recommendations for improving homeland security.

In its latest report, the Commission considers the economic impact of a significant attack against American agriculture and finds that, "the downstream effect of a major act of terrorism against this highly valuable industry would likely be enormous." Indeed, with one in eight American jobs directly involved in, or dependent upon agriculture, the economic impact of an attack on this sector could be the most important threat we face.

I want to commend the Commission, too, for observing that because agriculture was not recognized as a critical infrastructure when critical infrastructures were initially identified, agriculture did not benefit from the heightened awareness of terrorist threats that were paid to other sectors. As you further note, though, the Bush Administration has recognized this oversight, designated agriculture as a critical infrastructure in its National Strategy, and has taken strong steps toward protecting it. Addressing the new threat requires extraordinary vision, new thinking and the ability to look at the much larger issue – the protection of our citizens against potential threats.

We have seen the devastation, destruction and loss of lives – to say nothing about the damage to our economy – caused by the events of that horrible day, September 11, 2001. It is something that nobody wants to see repeated. It is why all of us are considering the important issues of homeland security and how we can best prepare for and prevent future attacks. However, preparedness also requires us to consider how we can best ready this nation – and the infrastructure which supports it – to respond in the event of another attack.

Note: The full report can be obtained at: http://animalagriculture.org/newsarchives/2003/Sep12/Gilmore.htm

Source: USDA

September 9, 2003

Appendix I. National Identification Development Team Roster

National Identification Development Team

Steering Committee

Tri-chairs: Valerie Ragan, MD; Neil Hammerschmidt, WI; Robert Fourdraine, WI
John Adams, VA; Mark Engle, CO; Clarence Siroky, ID; Scott Stuart, CO; John Wiemers, IL
Gary Wilson, OH; Cindy Wolf, MN; Taylor Woods, MO

Communications Subcommittee

Co-chairs: Scott Stuart, CO and Cindy Wolf, MN

Karen Batra, Washington, DC	Sharon Curtis Granskog, IL	Judy Malone, CO
James D. Cain, NC	Greg Ibach, NE	John McBride, MO
Linda Campbell, VA	Wes Ishmael, TX	David Morris, Washington, DC
Pete Crow, CO	James Jarrett, GA	Ben Richey, IA
Basil Eastwood, Washington, DC	Steve Kay, CA	Glenn Slack, KY
Madelaine Fletcher, MD	John Maday, CO	

Governance Subcommittee

Co-chairs: John Adams, VA and Clarence Siroky, ID

Jon Caspers, IA	Dick Jurgens, IL	John Ragan, Washington, DC
John Enck, PA	Joe Miller, Washington, DC	Gary Tauchen, WI
John Green, CO	Robert Norton, AL	George Teagarden, KS
Bob Hillman, TX	Ken Olson, IL	Gary Weber, Washington, DC

Information Technology Subcommittee

Chair: Robert Fourdraine, WI

Curtis Borchers, NE	Kathy Hagin, CA	Tim Niedecken, TX
Tyler Brown, MO	Rodney Howe, CO	David Nolan, AR
Susan J. Buroker, WI	Michael John, MO	Tim O'Neill, CO
Ken Crandall, UT	John Mass, CA	Matt Perrier, MO
Robert Dickens, NC	Kevin Maher, IA	Ron Prorok,SD
Jennifer Fernandes Hanf, CA	Gary Marsh, CA	Ross Simpson, CO
Niels Fogt, MO	Stu Marsh, AZ	Glenn Smith, GA
Bruce Golden, CO	Brett, McConkey, CAN	Victor Velez, CA

Standards Subcommittee

Co-Chairs: Mark Engle, CO and John Wiemers, IL

Fred Bourgeois, LA	Glenn Fischer, TX	James McKean, IA
Allen Bright, NE	Cara Gerken, OK	Stan Potratz, IA
John Carter, NC	David Greene, MD	James Riva, Washington, DC
James Case, CA	Cheryl Hall, MD	Julie Stitt, CAN
James Collins, MN	Steve Hennager, IA	Joan Dean Rowe, CA
Darrin Drollinger, WI	Jay Mattison, WI	John Schiltz, IA
David Farnum, IA	Phyllis Menden, WI	Lisa Villella, MO

Transition Subcommittee

Co-chairs: Taylor Woods, MO and Gary Wilson, OH

Richard Bowman, MN	Locke Karriker, OK	Paul Rodgers, WV
Matt Brockman, TX	Rick Keith, NE	Bob Smith, OK
Bruce Dokkebakken, MN	Jim Leafstedt, SD	Mark Spire, KS
Velmar Green, MI	Rosemary LoGiudice, IL	Steve Stanec, NE
Kent Haden, MO	Nancy Robinson, MO	

United States Animal Health Association

USAHA 2003
Resolution No. 19

UNITED STATES ANIMAL HEALTH ASSOCIATION 2003

RESOLUTION NUMBER: 19 APPROVED

SOURCE: COMMITTEE ON LIVESTOCK IDENTIFICATION

SUBJECT MATTER: UNITED STATES ANIMAL IDENTIFICATION PLAN

DATES: OCTOBER 14, 2003

BACKGROUND INFORMATION:

The number of animals officially identified in the United States has been decreasing rapidly over the last few years due to the successes of disease eradication programs that have historically provided the foundation for animal identification. This directly impacts the ability to track animals that may have been exposed to a disease of concern.

Current world conditions which include the possibility of intentional or accidental introduction of foreign animal disease make it essential that potentially exposed animals can be quickly traced.

The recent disclosure of Bovine Spongiform Encephalopathy (BSE) in Canada illustrates the tremendous economic impact that even one animal with a significant foreign animal disease, especially a zoonotic disease can cause. This tremendous impact on the cattle industry in Canada occurred even though Canada has an identification system that has recently been implemented, and therefore only allowed for the efficient tracking of animals that had been identified in the last few years. The impact would be significantly greater in the United States should BSE or a some other foreign animal disease be disclosed here since the number of animals identified has been on the decline, and significantly fewer animals are identified and able to be traced.

Being able to rapidly track animals exposed to a disease of concern, either foreign or domestic, is not only a critical component of being able to arrest the spread of disease, but is also a key factor in negotiations intended to reestablish international trade that may be halted as a result of a disease incursion. Therefore, it is critical that a comprehensive animal identification system be implemented as soon as possible,

In response, the work of a National Identification Development Team representing a

significant state-federal-industry cooperative effort has resulted in a draft United States Animal Identification Plan (USAIP). This plan, although still a work in progress, lays the foundation for the initiation of a comprehensive system for animal identification in the United States, a first step towards enhancing the ability to safeguard the health of the Nation's livestock, and to protect and enhance international trade.

RESOLUTION:

The United States Animal Health Association (USAHA) accepts the draft United States Animal Identification Plan (USAIP) proposed by the National Animal Identification Development Team as a work in progress, and encourages its further refinement and implementation through the following guiding principles:

- **the United States Department of Agriculture (USDA), Animal and Plant Health Inspection Service (APHIS), Veterinary Services (VS), state animal health authorities, and species specific groups should work to finalize and implement standards associated with the development and administration of the premises identification system and U.S. animal identification numbering system in a timely manner, and develop the information systems necessary to support them.**

- **the USDA-APHIS-VS should coordinate the organization of species specific groups to determine the final design, implementation process and oversight methods necessary for the national animal identification system for their respective species. These groups, working within the USAIP framework, will make their recommendations to the National Identification Steering Committee.**

- **the USDA-APHIS-VS should work with state animal health officials and the species groups to develop minimum standards necessary to implement the USAIP.**

Midwestern Association of State Departments of Agriculture
July 2003

Bovine Spongiform Encephalopathy – The outbreak of BSE in livestock in the United Kingdom and other countries, including Canada, has gained much of the world's attention. The formation of an adequate defense against BSE is continually changing. The causative agent has not yet been proven. Many questions remain which can only be resolved through research and on-going evaluation.

It is important to recognize that BSE is a hybrid issue concerning animal and public health. Public health concerns have been raised as a result of the outbreak in the United Kingdom. Moreover, the whole livestock industry risks being threatened by the heightened public health concerns over BSE.

The ban on the importation of animals and by-products known to be potentially infected reasonably embraces the known scientific facts.

Until the Canadian BSE investigation is complete, the source of the disease is identified, and adequate surveillance is instituted, we cannot be sure that adequate mitigation measures have been taken to protect the United States' cattle industry and the consumers of beef in the United States.

We urge USDA and other appropriate federal agencies to take the following actions immediately.

- Inspection of imports, both mail and large containers, must be improved and expanded. Customs inspectors currently inspect only a small portion of materials entering the U.S., and many imports are mislabeled. The opportunity for products from BSE affected countries to enter the US is very likely.

- BSE surveillance should be improved by requiring that more samples from cattle that die on farms be tested. More emphasis should be placed on obtaining samples from animals that are dead or down on farms. This is a group of animals that is under surveyed.

- Advanced Meat Recovery (AMR) systems should be improved and AMR-derived products should be tested to ensure that nervous tissue is not included in meat derived by this means.

- The feed ban should be absolute – NO mammalian protein should be fed to ruminants. The feed ban must be strictly enforced with immediate corrective actions taken. This may result in severe consequences for the rendering industry and others involved in the disposal of dead animals and offal. We believe, however, that it is far better to err on the side of safety. At the same time, we believe that actions should be taken to find new uses for rendered products. Feed manufacturing plants, transportation vehicles and storage areas must be dedicated so as to absolutely preclude the commingling of ruminant animal feed with any feed that contains the banned animal proteins.

- The allowance of feeding poultry litter to cattle should be immediately banned. When ruminant protein is fed to poultry, the BSE prion may pass through the bird unchanged and be present in the litter along with spilled feed. When this litter is fed back to cattle the prion would be present to infect cattle.

- Consumer products that contain bovine nervous tissue should be clearly labeled as such.
- Pet foods containing ruminant-based meat and bone meal should be clearly labeled as not for ruminant feed and should not be stored in the same area as ruminant feeds.
- Specified Risk Materials (SRM) should be banned from human consumption.

USDA correctly issued an emergency interim rule declaring Canada to be a BSE affected country, we urge USDA to continue to employ the regulatory system in place as consideration is given to permitting transportation of animals and products from BSE affected countries or regions. While emergency conditions mandated the enactment of the interim rule immediately without public comment, such emergency conditions do not exist as re-opening of the border to ruminant and ruminant products from BSE affected counties is considered.

Accordingly, we urge USDA to continue to adhere to the regulatory system in place for recognizing a country or region free of a disease and allow public comment prior to making a final decision on conditions necessary to allow imports of live animals into the United States from a BSE infected country. We also urge USDA not to rush the process of reinstating a region's (country's) disease free status. It is critical to gain a complete picture of the disease situation in the region (country) and to fully consider all information received from many sources prior to reinstating that status.

The OIE itself calls for Canada to fulfill a number of requirements before being "considered as presenting a minimal BSE risk." The OIE standard clearly calls for the implementation of meticulous and time-consuming efforts before any country with a BSE incident is released from scrutiny or sanction.

NASDA encourages the completion of the program to depopulate the remaining United Kingdom imported cattle in the United States. Continuing to monitor all visible bovine nervous disorders at slaughter is a must. Finally, we encourage the USDA to develop and implement effective methods for inactivation of the transmissible spongiform encephalopathy (TSE) agent.

Policy Amendment adopted at the NASDA Annual Meeting in Boise, Idaho, in September 2003.

Bovine Spongiform Encephalopathy – The outbreak of BSE in livestock in the United Kingdom and other countries, including Canada, has gained much of the world's attention. The formation of an adequate defense against BSE is continually changing. The causative agent has not yet been proven. Many questions remain which can only be resolved through research and on-going evaluation.

It is important to recognize that BSE is a hybrid issue concerning animal and public health. Public health concerns have been raised as a result of the outbreak in the United Kingdom. Moreover, the whole livestock industry risks being threatened by the heightened public health concerns over BSE.

The ban on the importation of animals and by –products known to be potentially infected reasonably embraces the known scientific facts.

Until the Canadian BSE investigation is complete, the source of the disease is identified, and adequate surveillance is instituted, we cannot be sure that adequate mitigation measures have been taken to protect the United States' cattle industry and the consumers of beef in the United States.

We urge USDA and other appropriate federal agencies to take the following actions immediately.

- Inspection of imports, both mail and large containers, must be improved and expanded. Customs inspectors currently inspect only a small portion of materials entering the U.S., and many imports are mislabeled. The opportunity for products from BSE affected countries to enter the US is very likely.

- BSE surveillance should be improved by requiring that more samples from cattle that die on farms be tested. More emphasis should be placed on obtaining samples from animals that are dead or down on farms. This is a group of animals that is under surveyed.

- Advanced Meat Recovery (AMR) systems should be improved and AMR-derived products should be tested to ensure that nervous tissue is not included in meat derived by this means.

- The feed ban should be absolute – NO mammalian protein should be fed to ruminants. The feed ban must be strictly enforced with immediate corrective actions taken. This may result in severe consequences for the rendering industry and others involved in the disposal of dead animals and offal. We believe, however, that it is far better to err on the side of safety. At the same time, we believe that actions should be taken to find new uses for rendered products. Feed manufacturing plants, transportation vehicles and storage areas must be dedicated so as to absolutely preclude the commingling of ruminant animal feed with any feed that contains the banned animal proteins.

- Ruminant byproducts shall not be allowed in poultry feed. When prohibited ruminant material is fed to poultry, the BSE prion may be present in the litter along with spilled feed. When this litter is fed back to cattle the prion would be present to infect cattle.

- Consumer products that contain bovine nervous tissue should be clearly labeled as such.
- Enforcement to assure that prohibited material bearing the warning statement "Do Not Feed to Cattle or Other Ruminants" is not sold or used as ruminant feed must occur at the state as well as the federal level.
- Specified Risk Materials (SRM) should be banned from human consumption.

USDA correctly issued an emergency interim rule declaring Canada to be a BSE affected country, we urge USDA and FDA to continue to employ the regulatory system in place as consideration is given to permitting transportation of animals and products from BSE affected countries or regions. While emergency conditions mandated the enactment of the interim rule immediately without public comment, such emergency conditions do not exist as re-opening of the border to ruminant and ruminant products from BSE affected counties is considered.

Accordingly, we urge USDA to continue to adhere to the regulatory system in place for recognizing a country or region free of a disease and allow public comment prior to making a final decision on conditions necessary to allow imports of live animals into the United States from a BSE infected country. We also urge USDA not to rush the process of reinstating a region's (country's) disease free status. It is critical to gain a complete picture of the disease situation in the region (country) and to fully consider all information received from many sources prior to reinstating that status.

The OIE itself calls for Canada to fulfill a number of requirements before being "considered as presenting a minimal BSE risk." The OIE standard clearly calls for the implementation of meticulous and time-consuming efforts before any country with a BSE incident is released from scrutiny or sanction.

NASDA encourages the completion of the program to depopulate the remaining United Kingdom imported cattle in the United States. Continuing to monitor all visible bovine nervous disorders at slaughter is a must. Finally, we encourage the USDA to develop and implement effective methods for inactivation of the transmissible spongiform encephalopathy (TSE) agent.

United States Senate
Senate Budget Committee

Written Statement of Terry Duppong
Glen Ullin, North Dakota

Regarding

Mad Cow Disease -- Industry Impact and U.S. Government Response

on behalf of

Ranchers-Cattlemen Action Legal Fund, United Stockgrowers of America (R-CALF USA)

January 9, 2004

Chairman Nickles, Ranking Member Conrad, members of the Committee, I am Terry Duppong, together with my wife, Patty, and two sons, Ty and Casey, we own Duppong's Willow Creek Farms in Glen Ullin, North Dakota. We raise registered Angus cattle and we finish cattle on our full-time ranching operation. I am also proud to be a member of the Ranchers-Cattlemen Action Legal Fund – United Stockgrowers of America (R-CALF USA). Our organization has worked tirelessly on behalf of the American cattle producer. Our focus has been on protecting and promoting the interests of independent cattle producers, and it is from that perspective that I come before you today. I appreciate the opportunity to provide comments on this issue as it is very important to the cow-calf operators, backgrounders and independent ranchers who constitute the heart of this country's cattle and beef industry.

The impact of the December 23, 2003, announcement by the United States Department of Agriculture (USDA) of a "presumptive positive" case for BSE in a Washington State dairy cow was immediate and damaging to the United States live cattle industry. We commend the United

States Department of Agriculture (USDA) and its various departments, including the Animal and Plant Health Inspection Service (APHIS) for doing an excellent job at calming consumer concerns by clearly explaining the BSE mitigation measures the United States began implementing in 1989. However, we are disappointed that the USDA has thus far ignored the economic interests of United States cattle producers as its actions have resulted in the subordination of U.S. cattle producers' interest to other interests, some of whom are our foreign competitors.

Despite the fact that the "presumptive positive" cow was tagged with a Canadian export ear-tag,[1] the USDA chose not to disclose this factual information until four days after its announcement of a "presumptive positive" case for BSE. R-CALF USA had received numerous reports, beginning on December 24, 2003, from members familiar with the investigation who indicated that the cow was tagged with a Canadian ear-tag. On December 26, 2003, R-CALF USA contacted the USDA urging the release of this factual information to prevent the market from overreacting. On December 27, 2003, the USDA finally announced the fact that the cow was tagged with a permanent ear-tag indicating the cow was imported from Canada.[2] However, this information was provided too late as cattle markets had already begun to cement its application of a worst-case scenario for the situation. This worst-case scenario was that the United States likely had a native case of BSE, implying that it also had a significant break in its BSE prevention program, including the possibility of a contaminated feed supply.

During the week preceding the December 23, 2003, BSE announcement, the 5 Area Weekly Weighted Slaughter price was approximately $91.50 per cwt.[3] For the week following

---

[1] Transcript of Technical Briefing and Webcast with U.S. Government Officials on BSE Case, December 27, 2003, in which Dr. Ron DeHaven stated, "What we have is a match to an ear-tag that was recovered from the animal at slaughter and records in Canada with that same ear-tag number," available at http://www.usda.gov/news/releases/2003/12/0444.htm, downloaded on January 8, 2004.
[2] Id.
[3] Estimated price based on verbal reports as USDA historical data was unavailable at time of writing.

the announcement, week ending December 26, 2003, the price was $86.01 per cwt.[4] During the next week, week ending January 2, the price fell to $74.59 per cwt.[5] Thus, the uncertainty in the market, caused largely because the market did not have the factual information necessary to mitigate the formulation of a worst-case scenario, was absorbed by United States live cattle producers who suffered an approximate $15.91 per cwt. drop in the value of fed cattle. This equates to a loss of $190.92 per head based on a 1200 pound steer.

Not only did the United State's domestic cattle market receive insufficient information to apply anything but a worst-case scenario to the disease situation, but our international markets were equally uninformed. On December 23, 2003, APHIS submitted the United States' Emergency Report to the World Organization for Animal Health (OIE), the international organization that develops animal health standards for its 165 World Trade Organization (WTO) members including the United States. In its Emergency Report, APHIS stated that the source of the BSE agent and the origin of infection was "[U]nknown. Trace-back and trace-out investigations have been initiated."[6] Thus, United States' export customers, which are also members of the OIE and respectful of its mission, were officially notified that the United States had a "presumptive positive" case for BSE; but they were not informed that the infected cow was tagged with a Canadian ear-tag. It was not until at least December 28, 2003, that APHIS submitted its follow-up Emergency Report to the OIE stating that "Preliminary tracing indicates that the animal may have entered the United States from Canada between 28 August and 25 October 2001."[7] It is, therefore, the case that the United States' non-disclosure of the Canadian ear-tag on the BSE infected cow was assimilated by United States' export customers for at least

---

[4] National Weekly Cattle and Beef Summary, USDA Livestock & Grain Market News, January 5, 2004.
[5] Id.
[6] Disease Information, Vol. 16 – No. 52, Bovine Spongiform Encephalopathy in the United States of America: Presumptive Diagnosis, December 26, 2003, available at http://www.oie.int/eng/info/hebdo/AIS_65.HTM#Sec1, downloaded on January 8, 2004.

as long, if not longer than it was assimilated by the domestic market. Meanwhile, the OIE did not include the United States on its international list of "Territories/Countries Having Reported Cases of BSE in Imported Animals Only."[8] Instead, the OIE classified the United States as having a confirmed case on December 23, 2003, without any explanatory footnotes.[9]

The information the USDA provided as well as the information it did not provide in a timely manner to the OIE is significant because the BSE standard established by the OIE and contained in the OIE Code provides that a country's disease ranking may not change if BSE is found in an imported animal. More specifically, if the United States discovers a BSE case in an animal that has been clearly demonstrated to originate directly from the importation of live cattle, and all of the offspring of the infected animal are destroyed, then such a BSE case does not disqualify the United States from its "BSE provisionally free country or zone" ranking.[10]

It is important that Congress realize that if mandatory country of origin labeling (COOL) were in place when the "presumptive positive" BSE case was announced, the financial harm experienced by United States cattle producers would not likely have occurred and the investigation and recall would have been expedited for the following reasons:

1. The Secretary of Agriculture would have been obligated to announce the fact that the cow was marked with a foreign marking at the time of the BSE announcement as such marking would be a legally sanctioned method of determining that an animal was imported. This would have eliminated the

---

[7] Disease Information, Vol. 17 – No. 1, Bovine Spongiform Encephalopathy in the United States of America: Follow-up report No. 1 (confirmation of diagnosis), January 2, 2004, available at http://www.oie.int/eng/info/hebdo/AIS_64.HTM#Sec0 downloaded on January 8, 2004.

[8] Territories/Countries Having Reported Cases of BSE in Imported Animals Only, Office International des Epizooties, Updated 13-11-2003, available at http://www.oie.int/eng/info/en_esbimport.htm, downloaded on January 8, 2004.

[9] Number of Reported Cases of Bovine Spongiform Encepthalopathy (BSE) Worldwide (excluding the United Kingdom, World Organization for Animal health, available at http://www.oie.int/eng/info/en_esbmonde.htm.

[10] Terrestrial Animal Health Code, 11th edition – 2003, Part 2, Section 2.3, Chapter 2.3.13., Office International des Epizooties.

price depressing uncertainty that pervaded the domestic and international markets.

2. The meat from the infected cow would have been segregated from the meat of the other 22 cows that were slaughtered on the same day and that were exclusively born, raised, and slaughtered in the United States. Thus APHIS would not likely have had to trace and recall all 10,000 pounds of beef that was subsequently distributed from the plant. COOL would have facilitated the recall efforts as only Canadian labeled beef would have been subject to the recall.

3. Consumers could have been informed that only beef products labeled with "Canada" were subject to the recall and this would have resulted in consumers maintaining the utmost confidence in beef labeled "product of the USA."

R-CALF USA has determined that since 1997, the year the United States' feed ban went into effect, the U.S. imported 8.1 million head of live Canadian cattle into the U.S. However, 6.2 million of these cattle were imported directly for slaughter and another 1.6 million were feeder cattle destined for slaughter within 4-8 months. Since our border has been closed to live Canadian cattle for over seven months, all these cattle have likely been purged from our system. This leaves approximately 437,000 head of Canadian cattle that may still reside in the U.S. However, 382,000 are dairy cattle and less than 55,000 are beef cattle.[11] It would appear that this is a manageable number of cattle as it represents less than one-half of one percent of the total U.S. cattle herd. APHIS should work aggressively to identify and subsequently mark these imported cattle with a permanent mark of origin to prevent the possibility that one of these

[11] U.S. Trade Statistics, United States Department of Agriculture, Foreign Agriculture Service, HS 10-Digit Imports, available at http://www.fas.usda.gov/ustrade/USTExHS10.asp?QI=, downloaded on January 2, 2004.

animals may lose their Canadian export tag. In addition, the U.S. could require testing of all these animals at the time of slaughter.

With respect to the value of the United States beef export markets subject to risk as a result of the BSE case, R-CALF USA has reviewed the USDA-Foreign Agricultural Service's (FAS's) HS 10-Digit exports and found that the value of beef and edible beef offal exports worldwide during the first ten months of 2003 was $2.9 billion. This partial-year value is equal to the full 2002 calendar year value of $2.9 billion.[12] The total value of United States' cattle exports worldwide, including both dairy and beef cattle, was $54 million in the first 10 months of 2003, and $131 million in calendar year 2002.[13] Therefore, in calendar year 2002, the total value of United States' cattle and beef exports was $3 billion. A risk analysis was recently conducted by APHIS to assess the risks associated with re-opening the Canadian border to live cattle and beef. In its analysis, APHIS included additional risks associated with BSE if trade restrictions were enforced against the United States. It estimated that indirect losses to United States' firms that support ruminant exports would equal an additional $2.5 billion annually.[14] In addition, APHIS estimated that more than 33 thousand full-time jobs, accounting for almost $1 billion in wages annually could be jeopardized.[15] Thus it appears that $6.5 billion in export value is at risk.

It is important to note that the United States live cattle industry is a supply sensitive industry. If our borders remain closed to exports, the 2.4 billion pounds of beef destined for export annually will continue to stockpile; and the continuing flow of beef imports into the

---

[12] U.S. Trade Statistics, United States Department of Agriculture, Foreign Agriculture Service, HS 10-Digit Exports, available at http://www.fas.usda.gov/ustrade/USTExHS10.asp?QI=, downloaded on January 8, 2004.
[13] Id.
[14] Risk Analysis: BSE Risk from the Importation of Designated Ruminants and Ruminant Products from Canada into the United States, Animal and Plant Health Inspection Service, Veterinary Services, October 2003.
[15] Id.

United States, in the amount of 3.2 billion pounds annually, will certainly compound our already depressed cattle prices.[16]

This is precisely why, on the day of the BSE announcement, R-CALF USA sent an emergency letter to President Bush and Secretary Veneman urging them to "Immediately close the United States border to all imports of live cattle, beef, and both raw and manufactured livestock feed until the circumstances surrounding this suspected case are fully disclosed and understood." R-CALF USA explained that this measure was needed to prevent a market collapse caused by a build up of excess beef supplies.[17] Neither the President nor the Secretary has responded to this request.

R-CALF USA does not have direct knowledge regarding the potential cost of a mandatory animal identification system. However, the USDA-Agricultural Marketing Service (AMS) reviewed a number of studies which estimated the costs to producers for identifying live animals. The AMS references the study conducted by E.E. Davis of Texas A&M, "Estimate of Start-up Costs for Country of Origin Labeling Requirements to the Texas Beef and Cattle Sectors," in its proposed rule for country of origin labeling. The AMS indicates that the Davis study included permanent animal identification in its cost estimate for producers.[18] The Davis study projected a first-year cost estimate of $1.3 billion for producers.[19]

The United States does not have a native case of BSE. Our efforts should be directed toward preventing the introduction of BSE from imported sources. To this end, the immediate implementation of COOL is the quickest way to begin accurately differentiating domestic live cattle from imported cattle; and should any of our livestock importers have another disease

---

[16] Livestock, Dairy, and Poultry Outlook, USDA-Economic Research Service, LDP-M-112, October 28, 2003. Volumes based on 2002 calendar year and trade deficit calculated by converting live cattle import number to carcass weight equivalent.
[17] Leo McDonnell, Letter to President Bush and Secretary Veneman, December 23, 2003.
[18] Federal Register, Vol. 68, No. 210, October 30, 2003, at 61962.
[19] Id. at 61961.

outbreak, we can immediately segregate these animals from the U.S. herd. Removing livestock from the Department of Treasury's list of exceptions from the general requirement to mark all imported products with a mark of origin, known as the J-List, would immediately enable us to accurately identify all animals that are not born and raised in the United States.

Individual animal identification, on the other hand, is a tool to manage a disease once an outbreak occurs. While there are benefits to be derived for this specific purpose, we must not let animal identification interfere with the goal of preventing the disease in the first place. COOL has already been passed, the rules are near completion, and the effective date is set. Congress should first ensure that COOL is implemented on schedule and then our industry can take animal identification under consideration.

To mitigate the financial damage that continues to accrue to the U.S. live cattle industry as a result of this imported case of BSE, we ask that you immediately take the following actions:

1. Immediately close the borders to all imported beef and cattle until all our trading partners remove their import restrictions against the United States.
2. Ensure that COOL is implemented on schedule and work with the Department of Treasury and the USDA to begin permanently marking all imported livestock immediately. This includes all imported Canadian cattle currently residing in the U.S.
3. Seek emergency funding to indemnify livestock producers who have suffered financial losses due to this single case of BSE in a Canadian cow.
4. Begin the development of an insurance or indemnification program for U.S. cattle producers to protect them from losses in the event of a future disease outbreak.

Thank you,

Terry Duppong

Terry Duppong

As a veterinarian, production consultant, and producer, I have a vested interest in the reputation of our North Dakota agricultural products. In the years of my profession, I have had numerous interactions with consumers of our livestock products (beef, pork, and lamb) at all stages of development. The reputation of our North Dakota calves command respect from feed yards throughout the country. Our ability to diversify and capture added value from our products enables our farmers and ranchers to realize maximum profit from their respective enterprises.

My position as a veterinarian in the Oakes community for the past 27 years has afforded me the opportunity to consult my clients on many aspects of their production enterprise. Almost daily I visit with my clients on marketing, genetic selection, health care, and nutrition for their cow-calf operations. On these occasions I often am confronted with misinformation that cause me concern for the safety and viability of our industry.

About a year and a half ago, I became acutely aware that our producers were either misinformed or uninformed about some of the rules in effect for ruminant feeding practices. I had two occasions where someone had recommended using swine feed containing animal protein products for feeding cattle. Current evidence suggests that as the single greatest risk for the transmission of prion and breeches the safeguards we have in place to prevent BSE.

Also about two years ago, the Oakes area was experiencing some consolidation of grain marketing terminals, and the resulting facility elected to close its feed related business. Faced with the loss of a feed outlet for our livestock producers, I partnered with another individual from the Oakes area, and we opened Oakes Feed. We are a multi-source dealership with emphasis on feed analysis, consultation, and

delivery. My experience in wearing two hats further escalated my concerns over improper nutrition consultation. A year ago I began my campaign to get feed dealers and nutritional consultants either licensed or certified in the state so we had some idea who was out there recommending feeding practices to our producers. I have visited with our district Representatives and Senator at the State level, with the State Veterinarians for both North Dakota and South Dakota, with members of the North Dakota Stockmen's Association, and with other interested parties. I was hoping to address this at the State level, however in view of recent activities, there may be increased Federal regulations implemented.

Our duty now, with the current BSE case, is to insure and protect the industry by using sound scientific evidence to prevent further exposure to our cattle population, and instill a level of confidence to the consumer that assures them the safety of our product.

Craig L. Galbreath DVM

The events of the past two weeks have put a sense of urgency to the proposals being discussed in the livestock industry. Consumer confidence and food safety issues that we have previously been comfortable with have been brought into question. Our response to these concerns will determine the future of the industry, and ultimately the future of agriculture.

Fortunately, we do have some precedence to use from the successful eradication programs for diseases such as Brucellosis and TB. At the time these programs were also met with resistance from certain sectors of the animal industry. Identification and testing were paramount to the success of these programs, however producer compliance was at times compromised hindering the process. Ultimately the programs worked and the industry has enjoyed the benefits of the integrity of our products.

The current program for eradication of scrapie in sheep and goats is another model that we can use to plan for the challenges confronting us with BSE. At the onset of the program, there was some producer reluctance for the identification process. However, with time and education our producers now can see results that coupled with the technology of DNA testing give them some solid ground to move forward toward the goal of eradication.

○