AUTHENTICATED
U.S. GOVERNMENT
INFORMATION
GPO

APPORTIONMENT IN THE BALANCE: A LOOK INTO THE PROGRESS OF THE 2010 DECENNIAL CENSUS

HEARING

BEFORE THE

SUBCOMMITTEE ON FEDERALISM AND THE CENSUS

OF THE

COMMITTEE ON GOVERNMENT REFORM

HOUSE OF REPRESENTATIVES

ONE HUNDRED NINTH CONGRESS

SECOND SESSION

MARCH 1, 2006

Serial No. 109–131

Printed for the use of the Committee on Government Reform

Available via the World Wide Web: http://www.gpoaccess.gov/congress/index.html
http://www.house.gov/reform

U.S. GOVERNMENT PRINTING OFFICE

27–016 PDF WASHINGTON : 2006

For sale by the Superintendent of Documents, U.S. Government Printing Office
Internet: bookstore.gpo.gov Phone: toll free (866) 512–1800; DC area (202) 512–1800
Fax: (202) 512–2250 Mail: Stop SSOP, Washington, DC 20402–0001

COMMITTEE ON GOVERNMENT REFORM

TOM DAVIS, Virginia, *Chairman*

CHRISTOPHER SHAYS, Connecticut
DAN BURTON, Indiana
ILEANA ROS-LEHTINEN, Florida
JOHN M. MCHUGH, New York
JOHN L. MICA, Florida
GIL GUTKNECHT, Minnesota
MARK E. SOUDER, Indiana
STEVEN C. LATOURETTE, Ohio
TODD RUSSELL PLATTS, Pennsylvania
CHRIS CANNON, Utah
JOHN J. DUNCAN, JR., Tennessee
CANDICE S. MILLER, Michigan
MICHAEL R. TURNER, Ohio
DARRELL E. ISSA, California
JON C. PORTER, Nevada
KENNY MARCHANT, Texas
LYNN A. WESTMORELAND, Georgia
PATRICK T. MCHENRY, North Carolina
CHARLES W. DENT, Pennsylvania
VIRGINIA FOXX, North Carolina
JEAN SCHMIDT, Ohio

HENRY A. WAXMAN, California
TOM LANTOS, California
MAJOR R. OWENS, New York
EDOLPHUS TOWNS, New York
PAUL E. KANJORSKI, Pennsylvania
CAROLYN B. MALONEY, New York
ELIJAH E. CUMMINGS, Maryland
DENNIS J. KUCINICH, Ohio
DANNY K. DAVIS, Illinois
WM. LACY CLAY, Missouri
DIANE E. WATSON, California
STEPHEN F. LYNCH, Massachusetts
CHRIS VAN HOLLEN, Maryland
LINDA T. SANCHEZ, California
C.A. DUTCH RUPPERSBERGER, Maryland
BRIAN HIGGINS, New York
ELEANOR HOLMES NORTON, District of Columbia

BERNARD SANDERS, Vermont (Independent)

MELISSA WOJCIAK, *Staff Director*
DAVID MARIN, *Deputy Staff Director/Communications Director*
ROB BORDEN, *Parliamentarian*
TERESA AUSTIN, *Chief Clerk*
PHIL BARNETT, *Minority Chief of Staff/Chief Counsel*

SUBCOMMITTEE ON FEDERALISM AND THE CENSUS

MICHAEL R. TURNER, Ohio, *Chairman*

CHARLES W. DENT, Pennsylvania
CHRISTOPHER SHAYS, Connecticut
VIRGINIA FOXX, North Carolina

WM. LACY CLAY, Missouri
PAUL E. KANJORSKI, Pennsylvania
CAROLYN B. MALONEY, New York

EX OFFICIO

TOM DAVIS, Virginia

HENRY A. WAXMAN, California

JOHN CUADERES, *Staff Director*
URSULA WOJCIECHOWSKI, *Professional Staff Member*
JULIANA FRENCH, *Clerk*
MARK STEPHENSON, *Minority Professional Staff Member*

CONTENTS

	Page
Hearing held on March 1, 2006	1
Statement of:	
Kincannon, Charles Louis, Director, U.S. Census Bureau; Brenda S. Farrell, Acting Director, Strategic Issues, U.S. Government Accountability Office; and David A. Powner, Director, Information Technology Management Issues, U.S. Government Accountability Office	8
Farrell, Brenda S.	14
Kincannon, Charles Louis	8
Powner, David A.	37
Rector, Ralph, Ph.D., senior research fellow and project manager, Center for Data Analysis, the Heritage Foundation; Andrew Reamer, Ph.D., deputy director, Urban Markets Initiative, the Brookings Institution; and Margo Anderson, professor, history and urban studies, University of Wisconsin-Milwaukee	126
Anderson, Margo	155
Reamer, Andrew, Ph.D.	135
Rector, Ralph, Ph.D.	126
Letters, statements, etc., submitted for the record by:	
Anderson, Margo, professor, history and urban studies, University of Wisconsin-Milwaukee, prepared statement of	157
Clay, Hon. Wm. Lacy, a Representative in Congress from the State of Missouri, prepared statement of	6
Farrell, Brenda S., Acting Director, Strategic Issues, U.S. Government Accountability Office, prepared statement of	16
Kincannon, Charles Louis, Director, U.S. Census Bureau, prepared statement of	10
Maloney, Hon. Carolyn B., a Representative in Congress from the State of New York, prepared statement of	115
Powner, David A., Director, Information Technology Management Issues, U.S. Government Accountability Office, prepared statement of	39
Reamer, Andrew, Ph.D., deputy director, Urban Markets Initiative, the Brookings Institution, prepared statement of	137
Rector, Ralph, Ph.D., senior research fellow and project manager, Center for Data Analysis, the Heritage Foundation, prepared statement of	128
Turner, Hon. Michael R., a Representative in Congress from the State of Ohio, prepared statement of	3

APPORTIONMENT IN THE BALANCE: A LOOK INTO THE PROGRESS OF THE 2010 DECENNIAL CENSUS

WEDNESDAY, MARCH 1, 2006

HOUSE OF REPRESENTATIVES,
SUBCOMMITTEE ON FEDERALISM AND THE CENSUS,
COMMITTEE ON GOVERNMENT REFORM,
Washington, DC.

The subcommittee met, pursuant to notice, at 10:06 a.m., in room 2154, Rayburn House Office Building, Hon. Michael R. Turner (chairman of the subcommittee) presiding.

Present: Representatives Turner, Foxx, Clay and Maloney.

Staff present: John Cuaderes, staff director; Ursula Wojciechowski, professional staff member; Juliana French; clerk; Adam Bordes and Mark Stephenson, minority professional staff members; and Jean Gosa, minority assistant clerk.

Mr. TURNER. A quorum being present, this hearing of the Subcommittee on federalism and the Census will come to order.

Welcome to the subcommittee's oversight hearing entitled, "Apportionment in the Balance: A Look into the Progress of the 2010 Decennial Census." Today we will consider the status of the Census Bureau's preparations for the 2010 decennial census.

This hearing is a followup to our April 19, 2005, hearing last year entitled, "Halfway to the 2010 Census: The Countdown and Components to a Successful Decennial Census." Since then the Census Bureau has achieved and is nearing completion of several key milestones. The Bureau has successfully carried out the American Community Survey for 1 full year. Additionally, the MAF/TIGER Enhancement Program is nearing what we all hope will be a successful completion.

As the Bureau continues its preparation for a short form only census, it is undertaking two major contracts: the Field Data Collection Automation program and the Decennial Response Integration System. These two technology contracts have a combined value of over $1 billion. These major contracts signal the first real "hi-tech" census, and the subcommittee will examine how the successful implementation of these contracts is critical to the 2010 decennial census.

Furthermore, the subcommittee will explore several other issues such as the Local Update of Census Addresses [LUCA], program and the intergovernmental partnerships required to facilitate the program. There are a number of important issues that can impact the successful implementation of the census, including personnel

and infrastructure matters, hiring and training temporary workers, and establishing temporary field offices.

Testing for the 2010 decennial census is already underway. The Bureau is testing policy and technology concepts in Travis County, TX, and the Cheyenne River Reservation in South Dakota. Canvassing in Texas was to be completed in 6 weeks, and the subcommittee understands that this goal was not met. In today's hearing, we will examine this issue, as well as the issue of using handheld technology in the testing environment. It is our understanding that the handhelds failed to perform adequately and the activity was concluded without finishing the address file that is needed for the next test phase.

These issues must be resolved before the 2008 dress rehearsal. I am eager to hear what the Census Bureau is doing to address the problems of their tests and other issues related to the 2010 decennial census.

On our first panel, we welcome remarks from the Honorable Charles Louis Kincannon, director of the Census Bureau. Then we will hear from Ms. Brenda Farrell, Acting Director of Strategic Issues, and Mr. David Powner, Director of Information Technology Management Issues, both from the Government Accountability Office, regarding their assessment of the Bureau's planning for the decennial census.

On our second panel, we will hear from Dr. Ralph Rector from the Heritage Foundation, Dr. Andrew Reamer from the Brookings Institution, and last, we will hear from Dr. Margo Anderson, professor of history and urban studies at the University of Wisconsin-Milwaukee.

[The prepared statement of Hon. Michael R. Turner follows:]

TOM DAVIS, VIRGINIA,
CHAIRMAN

CHRISTOPHER SHAYS, CONNECTICUT
DAN BURTON, INDIANA
ILEANA ROS-LEHTINEN, FLORIDA
JOHN M. McHUGH, NEW YORK
JOHN L. MICA, FLORIDA
GIL GUTKNECHT, MINNESOTA
MARK E. SOUDER, INDIANA
STEVEN C. LATOURETTE, OHIO
TODD RUSSELL PLATTS, PENNSYLVANIA
CHRIS CANNON, UTAH
JOHN J. DUNCAN, JR., TENNESSEE
CANDICE MILLER, MICHIGAN
MICHAEL R. TURNER, OHIO
DARRELL ISSA, CALIFORNIA
VIRGINIA BROWN-WAITE, FLORIDA
JON C. PORTER, NEVADA
KENNY MARCHANT, TEXAS
LYNN A. WESTMORELAND, GEORGIA
PATRICK T. McHENRY, NORTH CAROLINA
CHARLES W. DENT, PENNSYLVANIA
VIRGINIA FOXX, NORTH CAROLINA

ONE HUNDRED NINTH CONGRESS

Congress of the United States

House of Representatives

COMMITTEE ON GOVERNMENT REFORM

2157 RAYBURN HOUSE OFFICE BUILDING

WASHINGTON, DC 20515–6143

MAJORITY (202) 225–5074
FACSIMILE (202) 225–3974
MINORITY (202) 225–5051
TTY (202) 225–6852

http://reform.house.gov

HENRY A. WAXMAN, CALIFORNIA,
RANKING MINORITY MEMBER

TOM LANTOS, CALIFORNIA
MAJOR R. OWENS, NEW YORK
EDOLPHUS TOWNS, NEW YORK
PAUL E. KANJORSKI, PENNSYLVANIA
CAROLYN B. MALONEY, NEW YORK
ELIJAH E. CUMMINGS, MARYLAND
DENNIS J. KUCINICH, OHIO
DANNY K. DAVIS, ILLINOIS
WM. LACY CLAY, MISSOURI
DIANE E. WATSON, CALIFORNIA
STEPHEN F. LYNCH, MASSACHUSETTS
CHRIS VAN HOLLEN, MARYLAND
LINDA T. SANCHEZ, CALIFORNIA
C.A. DUTCH RUPPERSBERGER,
MARYLAND
BRIAN HIGGINS, NEW YORK
ELEANOR HOLMES NORTON,
DISTRICT OF COLUMBIA

BERNARD SANDERS, VERMONT,
INDEPENDENT

SUBCOMMITTEE ON FEDERALISM AND THE CENSUS
Congressman Michael R. Turner, Chairman

OVERSIGHT HEARING
STATEMENT BY MICHAEL R. TURNER, CHAIRMAN

Hearing topic: *"Apportionment in the Balance: A Look into the Progress of the 2010 Decennial Census."*

Wednesday, March 1, 2006
10:00 am
Room 2154 Rayburn House Office Building

Welcome to the Subcommittee's oversight hearing entitled, *"Apportionment in the Balance: A Look into the Progress of the 2010 Decennial Census."* Today we will consider the status of the Census Bureau's preparations for the 2010 Decennial Census.

This hearing is a follow-up to our April 19 2005 hearing last year entitled, *"Halfway to the 2010 Census: The Countdown and Components to a Successful Decennial Census."* Since then the Census Bureau has achieved and is nearing completion of several key milestones. The Bureau has successfully carried out the American Community Survey for one full year. Additionally, the MAF/TIGER Enhancement Program is nearing what we all hope will be a successful completion.

As the Bureau continues its preparation for a short-form only census, it is undertaking two major contracts, the Field Data Collection Automation program and the Decennial Response Integration System. These two technology contracts have a combined value of over $1 billion. These major contracts signal the first real "hi-tech" census, and the Subcommittee will examine how the successful implementation of these contracts is critical to the 2010 Decennial Census.

Furthermore, the Subcommittee will explore several other issues such as the Local Update of Census Addresses or LUCA program and the intergovernmental partnerships required to facilitate the program. There are a number of important issues that can impact the successful implementation of the census including: personnel and infrastructure matters; hiring and training temporary workers; and establishing temporary field offices.

Testing for the 2010 Decennial Census is already underway. The Bureau is testing policy and technology concepts in Travis County, Texas and the Cheyenne River Reservation in South Dakota. Canvassing in Texas was to be completed in six weeks; and the Subcommittee understands that this goal was not met. In today's hearing we will examine this issue, as well as the issue of using handheld technology in the testing environment. It is our understanding that the handhelds failed to perform adequately and the activity was concluded without finishing the address file that is needed for the next test phase.

These issues must be resolved before the 2008 Dress Rehearsal. I am eager to hear what the Census Bureau is doing to address the problems of their tests and other issues related to the 2010 Decennial Census.

On our first panel we welcome remarks from the Honorable Charles Louis Kincannon, Director of the Census Bureau. Then we will hear from Ms. Brenda Farrell, Acting Director of Strategic Issues and Mr. David Powner, Director of Information Technology Management Issues, both from the Government Accountability Office regarding their assessment of the Bureau's planning for the decennial census.

On our second panel we will hear from Dr. Ralph Rector from the Heritage Foundation, Dr. Andrew Reamer from the Brookings Institution, and lastly, we will hear from Dr. Margo Anderson, professor of history and urban studies at the University of Wisconsin-Milwaukee.

With that, my colleagues on the Subcommittee and I welcome you and look forward to your testimony.

######

Mr. TURNER. With that, my colleagues on the subcommittee and I welcome you and look forward to your testimony, and I now yield to the gentleman from Missouri, the distinguished Member Mr. Clay, for any opening remarks that he may have.

Mr. CLAY. Good morning, and thank you, Mr. Chairman, for calling today's hearing to review the Census Bureau's efforts for carrying out the 2010 decennial census. I welcome our witnesses, especially Director Kincannon of the Census Bureau.

I would like to begin by expressing my unwavering support for the American Community Survey and its goals of delivering more timely and effective data to the Bureau. As the ranking member of this subcommittee, I am pleased to have been a part of the efforts to bring the ACS into reality. The Census Bureau is now collecting data in every county in the United States, and this effort will make the 2010 census less complex and more efficient.

Information from the decennial census provides an important benchmark for the formulas governing many of our domestic programs, thus helping us serve the needs of our citizens. The Bureau continues to face pressing challenges, however, as preparations for the 2010 decennial census begin in earnest. First, it remains unclear if their acquisitions for new IT infrastructure will be tested and ready for the 2008 rehearsal of 2010 census. It will be difficult to ensure an accurate census if we cannot rely on the new technologies being implemented to aid in agency efforts.

Furthermore, it remains unclear to me if past problems concerning the undercounting of minority populations or the accuracy of the Master Address File have been remedied. With only 4 years left until field work begins, plans and mitigation strategies must be established to ensure the most accurate and reliable census possible.

Once again, I look forward to learning more today about the plans for the 2010 census and how we in Congress can be of assistance to the Bureau.

This concludes my statement, Mr. Chairman, and I yield back.

[The prepared statement of Hon. Wm. Lacy Clay follows:]

STATEMENT OF THE HONORABLE WM. LACY CLAY
HEARING ON CENSUS OVERSIGHT
MARCH 1, 2006

Thank you, Mr. Chairman, for calling today's hearing to review the Census Bureau's efforts for carrying out the 2010 decennial census. I welcome our witnesses, especially Director Kincannon of the Census Bureau.

I would like to begin by expressing my unwavering support for the American Community Survey and its goals of delivering more timely and effective data to the Bureau. As the ranking member of this subcommittee, I am pleased to have been a part of the efforts to bring the ACS into reality. The Census Bureau in now collecting data in every county in the United States, and this effort will make the 2010 census less complex and more efficient.

Information from the decennial census provides an important benchmark for the formulas governing many of our domestic programs, thus helping us serve the needs of our citizens. The Bureau continues to face pressing challenges, however, as preparations for the 2010 decennial census begins in earnest. First, it remains unclear if their

acquisitions for new IT infrastructure will be tested and ready for the 2008 rehearsal or 2010 census. It will be difficult to ensure an accurate census if we cannot rely on the new technologies being implemented to aide in agency efforts.

Furthermore, it remains unclear to me if past problems concerning the undercounting of minority populations or the accuracy of the Master Address File have been remedied. With only four years left until field work begins, plans and mitigation strategies must be established to ensure the most accurate and reliable census possible.

Once again, I look forward to learning more today about the plans for the 2010 census and how we in Congress can be of assistance to the Bureau. This concludes my statement, Mr. Chairman.

Mr. TURNER. Thank you, Mr. Clay. I appreciate your interest and your professionalism on the committee and your work with the issues of the census.

We will now start with the witnesses. Each witness has kindly prepared written testimony, which will be included in the record of this hearing. Witnesses will notice there is a timer with a light on at the witness table. The green light indicates that you should begin your prepared remarks, and the red light indicates that time has expired.

It is the policy of this committee that all witnesses be sworn in before they testify. If you would please rise and raise your right hands.

[Witnesses sworn.]

Mr. TURNER. Please let the record show that all the witnesses have responded in the affirmative, and we will begin with Mr. Kincannon.

STATEMENTS OF CHARLES LOUIS KINCANNON, DIRECTOR, U.S. CENSUS BUREAU; BRENDA S. FARRELL, ACTING DIRECTOR, STRATEGIC ISSUES, U.S. GOVERNMENT ACCOUNTABILITY OFFICE; AND DAVID A. POWNER, DIRECTOR, INFORMATION TECHNOLOGY MANAGEMENT ISSUES, U.S. GOVERNMENT ACCOUNTABILITY OFFICE

STATEMENT OF CHARLES LOUIS KINCANNON

Mr. KINCANNON. Thank you, Mr. Chairman. Good morning, and on behalf of the Census Bureau, I want to thank you and the ranking minority member and the whole committee for inviting me to testify. Today we are 4 years and 1 month from census day.

The success of the decennial census is the Census Bureau's largest and most important priority. It represents 60 percent of the President's 2007 budget request for the Census Bureau. The budget for the decennial census program covers the American Community Survey [ACS]; the MAF/TIGER enhancement; and the 2010 census activities themselves. Because of strong congressional support, the American Community Survey is on track and moving toward its goals.

We will release the first annual estimates from the full ACS this August for approximately 8,000 communities with populations of 65,000 or more and, for the first time, data for every congressional district in the country. In 2008, we will release data for communities of 20,000 or more, and in 2010, data for every census tract—2 years before equivalent data would be available from a traditional census long form.

The ACS is crucial to the overall success of the decennial census because it replaces the long form and allows us to focus our attention on a complete count of the American population.

Another critical component of the success of the 2010 census is the address list and map. The Census Bureau is conducting an extensive nationwide operation to modernize and consolidate MAF/TIGER. We are using GPS to align the streets of the TIGER maps and working with communities to ensure that we do not miss a new neighborhood. To date, we have realigned the streets and roads for about 1,700 of the Nation's counties, with about 1,600

more to go in order to reach completion by April 2008. We will complete this task on time.

We are also working to improve our most significant partnership opportunity—the Local Update of Census Addresses program [LUCA]. In 2007, we will invite the Nation's 39,000 municipalities to help update the address list for their communities for use in the 2010 census. Knowing that communities differ, we will offer different options for governments to participate, ranging from a full review of the address file to a simple review of housing unit counts.

We are working to strengthen the infrastructure of the 2010 census through technology. As the chairman said, this will be the first truly high-tech census. Our efforts have centered on two major systems: the 2010 Decennial Census Response Integration System [DRIS], as we call it, and the Field Data Collection Automation system [FDCA]. These large information technology contracts together total over $1 billion. The purpose of the DRIS contract, which was awarded last year to Lockheed Martin Corp., is to ensure accurate and protected collection and storage of Americans' data whether by paper form or handheld computer. The FDCA contract, which will be awarded in the next month or so, provides automation resources to support field data collection operations.

As we move forward, it is essential to remain on schedule. This year, we will conduct a final test census in Travis County, TX, and the Cheyenne River Reservation in South Dakota. These tests are important to our ability to conduct a successful dress rehearsal and ultimately a successful census. We will conduct the 2008 dress rehearsal in two locations: San Joaquin County, CA, and in nine counties surrounding Fayetteville, NC. In fact, some aspects of the dress rehearsal are already underway, including LUCA.

The dress rehearsal will use the technology we plan to use in the decennial census, and this is quite important. No last-minute experiments. We will include a targeted second mailing of questionnaires to encourage households to respond and reduce costly nonresponse followup. We will also send a targeting mailing of Spanish-English bilingual questionnaires in selected neighborhoods.

It is important to note that many of the 2010 census operations and procedures, and especially decisions, those involving technology, need to be in place before the dress rehearsal. The President's budget recognizes that we cannot postpone improvements or tests without introducing risk to the census.

All of this underscores the importance of congressional support for all aspects of the 2010 decennial census program from the ACS to the dress rehearsal. Thousands of individual operations and procedures must be successfully implemented before census day in order to ensure the success of the census.

Mr. Chairman, I thank you for this opportunity to provide an update to the Congress, and I look forward to answering your questions.

Thank you.

[The prepared statement of Mr. Kincannon follows:]

PREPARED STATEMENT OF

CHARLES LOUIS KINCANNON
DIRECTOR, US CENSUS BUREAU

"Apportionment in the Balance: A Look into the Progress of the 2010 Decennial Census"

Before the Subcommittee on Federalism and the Census
US House of Representatives

1 March 2006

Good morning. On behalf of the US Census Bureau, I want to thank Chairman Turner and the Subcommittee on Federalism and the Census for inviting me to testify on the progress of the 2010 Decennial Census Program. Today, we are four years and one month from Census Day. Because of your support, many of the key planning and operational components of the 2010 reengineered census are already underway, including the fully-implemented American Community Survey; the address list and map, known as MAF/TIGER, consolidation and modernization; and the 2010 Census testing and preparation activities.[1] Each of these components is an integral part of a successful 2010 Decennial Census Program.

The success of the decennial census is the Census Bureau's largest priority, and represents sixty percent of the President's FY2007 budget request for the Census Bureau. This request includes approximately $184 million for salaries and expenses, as well as $182 million for other economic and demographic programs conducted by the Census Bureau. The budget request of $512 million, an increase of $64 million from last year, for the Decennial Census Program includes $180 million for the American Community Survey; $74 million for MAF/TIGER; and $258 million for 2010 Census activities.

---

[1] MAF/TIGER: *Master Address File* (MAF) and *Topologically Integrated Geographic Encoding and Reference* system (TIGER). These programs represent the "address list" and "road map" by which the census is conducted.

The American Community Survey, the nation's largest continuous household survey, is crucial to the overall success of the decennial census because it replaces the long form. This will allow the Census Bureau to conduct a short-form only census and fully focus its efforts on the constitutional responsibility of the census—an accurate, complete enumeration. The American Community Survey also provides annual, up-to-date estimates for the characteristics of the population. Because of strong congressional support, the American Community Survey is on track and moving toward its goals. The American Community Survey began full implementation in 2005, when the survey's sample size reached three million housing units per year, or about 250,000 housing units per month. We have been able to maintain high response rates throughout the survey. In January 2006, we began the last phase of full implementation by incorporating group quarters data collection in the survey.

We will release the first annual estimates from the full American Community Survey this August for approximately 8,000 communities that have populations of 65,000 or more, as well as data for every congressional district. In 2008, we will release data for communities of 20,000 or more, and data for every census tract in 2010—two years before equivalent data from a census long form would be available. The 2007 budget request allows the Census Bureau to proceed and maintain all of its American Community Survey operations.

The American Community Survey is important to the nation, because it strengthens the nation's data infrastructure by providing timely local data that will enhance decision-making at all levels of government, as well as the private sector. It is worth remembering that in prior decennial cycles, comprehensive, detailed information about local communities was only available once a decade from the census long form. The long form also complicated the decennial census. The response rates for those who received the long form were lower than for those who received the short form, thereby increasing the cost of conducting non-response follow-up. In 2010, these obstacles will be removed, enhancing the Census Bureau's ability to conduct a successful 2010 Census for the purposes of apportionment and redistricting.

The Census Bureau is conducting an extensive, nation-wide operation to modernize and consolidate MAF/TIGER. We are using GPS to align streets of the TIGER maps and working with communities to ensure we do not miss a new neighborhood. These objectives are supported by the 2007 budget request for $74 million for the MAF/TIGER Enhancement Program. To date, working with the Harris Corporation, we have realigned the streets and roads for approximately 1,700 of the nation's counties, with about 1,600 more to go in order to reach completion by April 2008. This improvement is significant because the TIGER system and census data are national resources used by both the public and private sectors to make decisions affecting the quality of life throughout the United States. TIGER is used by the US Geological Survey (USGS) for the National Map, as well as commercial applications.

The 2010 Census is a partnership between the Census Bureau and thousands of communities throughout the United States. As part of the 2010 Census, we will conduct an extensive advertising and marketing campaign to build partnerships and awareness with these

communities. We have just sponsored an "Industry Day" to initiate the market-research phase for this campaign and learn more about the current "best practices" of the marketing industry.

We are also working to improve our most significant partnership opportunity, the Local Update of Census Addresses (LUCA) program. This program was first implemented for Census 2000 in response to *PL 103-430*, the Census Address List Improvement Act of 1994. As a result, the Census Bureau contacted the nation's 39,000 municipal governments inviting them to help update the census address list before the census was conducted. In 2007, we will once again invite the nation's 39,000 municipalities to help update the address list for their communities for use in the 2010 Census. However, we are endeavoring to improve the LUCA program based on lessons learned from Census 2000. Knowing that communities differ by population size, as well as by other factors, we will offer different options for governments to participate, ranging from a full review of the protected, confidential address file to review of housing unit counts. We are also working throughout the decade to update the address file with updates from the US Postal Service's Delivery Sequence File, conduct the Community Address and Updating Survey (CAUS), and conduct a nation-wide address canvassing operation in 2009.

From taking advantage of partnership opportunities to taking advantage of automation, we are working to strengthen the infrastructure for the 2010 Census. Part of our efforts have centered on two major systems, the 2010 Decennial Response Integration System (DRIS) and the Field Data Collection Automation (FDCA) system. Both of these are large information technology (IT) contracts, totaling together over one billion dollars. The purpose of the DRIS contract, which was awarded last year to Lockheed Martin Corporation, is to ensure accurate and protected collection and storage of Americans' data whether by paper form or hand held computer. We are now currently involved in Phase I of this program, which includes design and implementation of the system for the 2008 Census Dress Rehearsal.

For the 2010 Census, the Census Bureau also plans to increase the use of automation to directly capture information collected during personal interviews and eliminate the need for paper maps and address lists for the major field data collection operations. The FDCA contract, which will be awarded in late spring of this year, provides automation resources to support field data collection operations. The FDCA contractor will provide an integrated IT infrastructure, as well as support for mobile computing devices and other aspects of the field activities.

As we move forward, it is essential to remain on schedule. Although we are still four years from Census Day, we should not be deceived by the calendar. From now until Census Day, every activity undertaken needs to build on the success of previous activities. This year we will conduct the final Census Test, in Travis County, Texas and on the Cheyenne River Reservation in South Dakota. These sites will provide an environment to further test and refine census operations and activities, such as the use of GPS-equipped hand-held computers and a replacement, second mailing of the questionnaires to non-responding households. We will also focus on enumeration methods within an American Indian community, finding ways to improve coverage, and testing improved self-response options. The testing program is valuable

because it allows us to test operations separately in different environments to determine whether these operations could be used in census-like conditions and to prepare for the Census Dress Rehearsal.

We strive to make operations in the Dress Rehearsal closely resemble the actual census. We will conduct the 2008 Dress Rehearsal in two locations, San Joaquin County, California, and in Fayetteville and Eastern North Carolina, opening Local Census Offices in Stockton and Fayetteville. In fact, some aspects of the Dress Rehearsal are already underway, including LUCA. We have sent advance letters and will send invitations to selected local governments in a few weeks outlining the program and describing the materials, including the lists and maps they will receive if they choose to participate. The Dress Rehearsal will also feature the technology we plan to use in the decennial census, including the various data collection operations that are being developed through DRIS and FDCA. We will include a second mailing to encourage households to respond and potentially reduce the costly non-response follow-up workload. We will use a targeted mailing of Spanish/English bilingual questionnaires, successfully tested in the 2005 National Census Test.

It is important to note that many of the 2010 Census operations and procedures are being developed as we speak; and that many decisions, especially those involving technology, need to be in place prior to the Dress Rehearsal. The President's Budget recognizes that we cannot postpone improvements or tests without introducing risks to the census. If for some reason we do not have the opportunity to test certain programs or procedures in the Dress Rehearsal, then we may not be able to implement those improvements or we would be forced to conduct untried procedures in the 2010 Census. Moreover, major changes to census operations or procedures at this late stage could also undermine the census. For instance, we recently outlined the implications of tabulating prisoners at the address of their "permanent home of record," rather than at their place of incarceration in a report to Congress. A change such as this could have considerable consequences, not only to census operations, but also to the overall accuracy of the data for that sub-population.

All of this underscores the importance of congressional support for all aspects of the 2010 Decennial Census Program, from the American Community Survey to the Dress Rehearsal. Thousands of individual operations and procedures must be successfully implemented before Census Day, four years from now, in order to ensure the success of the 2010 Census. A successful census is more than a technical accomplishment for the Census Bureau; it is the creation of a national resource that empowers decision-making. The decennial census program, including the 2010 Census, the American Community Survey, and MAF/TIGER, provides facts and information to the nation —to the private and public sector, the large city and small town, the researcher and the private citizen—that can improve the quality of life throughout our country. I hope you will agree that this is a success worth supporting.

Mr. Chairman, thank you for this opportunity to provide an update to the Congress. I would be happy to answer your questions.

Mr. TURNER. Thank you.
Ms. Farrell.

STATEMENT OF BRENDA FARRELL

Ms. FARRELL. Mr. Chairman, Mr. Clay, thank you for the opportunity to be here today to discuss the Census Bureau's preparations for the 2010 census. Full and comprehensive planning is crucial to the success of any large, long-term project, especially with the costs, complexity, and high stakes of the decennial census. The 2010 census projected life-cycle costs span 13 years and total over $11 billion, and its recruitment goals are similar to the 2000 census—2½ million applicants could be recruited to carry out census operations.

Given the escalating costs of the census in an era of serious national fiscal challenges, oversight will be particularly important. As shown in the figures on the screen and on page 6 of the testimony, the projected average cost is $72 per housing unit for 2010, and it is nearly 5½ times greater than the $13 it cost to count each household in 1970 in constant fiscal year 2000 dollars.

My remarks today are based on findings from our prior report and preliminary results from ongoing work that we plan to issue in the near future. First, I will describe the overall progress that the Bureau is making toward preparing the 2010 census. Second, I will note some issues that pose a risk to a successful census. Most importantly, the Bureau is further along in planning the 2010 census compared to a similar point in time during the 2000 census cycle.

Early in this decade, the Bureau developed a promising design to achieve its principal goals for the 2010 census. The fundamental design of the census has the potential to control costs and improve coverage and accuracy. Also noteworthy is the Bureau's greater willingness to outsource key census-taking operations that would be difficult for it to carry out on its own. It will be important for the Bureau to focus on its acquisition activities to help ensure the 2010 contractors fulfill the Bureau's expectations.

While the Bureau should be commended for the progress that it has made, it will be important for the Bureau to resolve issues that pose a risk to a successful census. For example, the Bureau plans to use handheld mobile computing devices to help develop the census address list and collect data from millions of households that do not respond to the initial census questionnaires. These handheld devices are an important step forward because they are designed to replace many of the paper questionnaires and maps that were used in past censuses and are a key element of the Field Data Collection Automation program, one of the acquisition contracts that my colleague Mr. Powner will discuss.

The Bureau has never before used these devices in a decennial. In tests held to date, census workers found the devices easy to use for such things as using the electronic maps to find their assignment areas. On the other hand, the reliability of the devices proved troublesome as the devices experienced transmission problems and memory overload. The Bureau has taken steps to address these issues, and next month the devices will be evaluated again, and we

will be onsite to assess the extent to which the Bureau has addressed these reliability issues.

Further, I would like to note that Hurricanes Katrina and Rita highlight the importance of contingency planning and examining whether the Bureau's existing operations are adequate for capturing the demographic and physical changes that have occurred along the Gulf Coast. We have had a preliminary discussion with the Bureau on this topic and will continue to assess the Bureau's contingency planning as part of our oversight of the 2010 census.

In conclusion, while the ramp-up to 2010 is making progress, past experience has shown that Congress has every reason to remain vigilant. As we have done throughout the past several decades, we look forward to supporting the subcommittee in its decisionmaking and oversight efforts.

Mr. Chairman, this concludes my statement. I will be happy to take questions from you or Mr. Clay at your convenience.

[The prepared statement of Ms. Farrell follows:]

United States Government Accountability Office

GAO

Testimony

Before the Subcommittee on Federalism and the Census, Committee on Government Reform, House of Representatives

For Release on Delivery
Expected at 10:00 a.m. EST
Wednesday, March 1, 2006

2010 CENSUS

Planning and Testing Activities Are Making Progress

Statement of Brenda S. Farrell
Acting Director
Strategic Issues

GAO-06-465T

March 1, 2006

GAO
Accountability·Integrity·Reliability

Highlights

Highlights of GAO-06-465T, a report to the Subcommittee on Federalism and the Census, Committee on Government Reform, House of Representatives

2010 CENSUS

Planning and Testing Activities Are Making Progress

Why GAO Did This Study

Rigorous planning is key to a successful census as it helps ensure greater effectiveness and efficiency. The U.S. Census Bureau (Bureau) estimates the 2010 Census will cost around $11.3 billion, which would make it the most expensive census in our country's history, even after adjusting for inflation. GAO was asked to testify on (1) the Bureau's progress in preparing for the 2010 Census, (2) the challenges that Hurricanes Katrina and Rita might pose for the Bureau's future activities, and, (3) more broadly, the importance of planning for a range of events that could severely disrupt the census.

What GAO Recommends

GAO is not making new recommendations at this time, but past reports have contained GAO's views on steps the Bureau needs to take to improve its planning processes, MCDs, enumerator training, human capital planning, and other aspects of the census. The Bureau generally concurred with these prior recommendations and has taken action to implement some of them.

www.gao.gov/cgi-bin/getrpt?GAO-06-465T.

To view the full product, including the scope and methodology, click on the link above. For more information, contact Brenda S. Farrell at (202) 512-3604 or farrellb@gao.gov.

What GAO Found

The Bureau's preparations for the 2010 Census are making progress along several fronts. Of particular note is (1) the re-engineered design of the census, which holds promise for controlling costs and maintaining accuracy; (2) the Bureau's early planning process which was more rigorous than for the 2000 Census; and (3) the Bureau's greater willingness to outsource key census-taking operations that would be difficult for it to carry out on its own.

Census Costs Are Increasing (Average Cost per Housing Unit in Constant Fiscal 2000 Dollars).

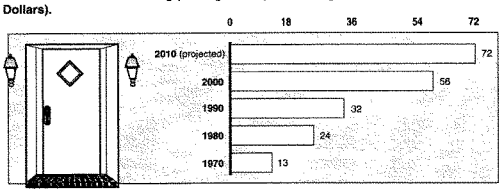

Source: GAO analysis of Census Bureau figures.

At the same time, it will be important for the Bureau to resolve issues that pose a risk to a successful census. For example, the Bureau plans to use hand-held mobile computing devices (MCD) to develop the census address list and collect data from millions of households that do not respond to the initial census questionnaire. The MCDs are an important step forward because they are designed to replace many of the paper questionnaires and maps that were used in past censuses, and are a key element of the Bureau's Field Data Collection Automation program. The Bureau has never before used the devices in a decennial. In tests held in 2004 and 2006 to date, census workers found the MCDs easy to use, but sometimes unreliable, which reduced efficiency. Some workers also deviated from prescribed procedures which points to the need for better training. The Bureau has taken steps to address these issues and future tests will help determine the effectiveness of the Bureau's actions. The Bureau also faces a possible brain drain, as 45 percent of its workforce will be eligible to retire by 2010. Although the Bureau has taken preventative measures, it could improve those efforts by, among other actions, strengthening the monitoring of its mission-critical workforce. Hurricanes Katrina and Rita highlight the importance of contingency planning and examining whether the Bureau's existing operations are adequate for capturing the demographic and physical changes that have occurred along the Gulf Coast.

Overall, as the Bureau's preparations for 2010 continue, it will be important for Congress to monitor the Bureau's progress in (1) identifying and diagnosing problems, (2) devising solutions, and (3) integrating refinements in time to be evaluated during the Census Dress Rehearsal scheduled for 2008.

Mr. Chairman, Mr. Clay, and Members of the Subcommittee:

Thank you for the opportunity to be here today to provide the subcommittee a progress report on the U.S. Census Bureau's (Bureau) preparations for the 2010 Census. For the past several years, we have issued several reports on the Bureau's 2010 planning and testing efforts at the subcommittee's request.[1] My remarks today highlight some of the key findings in our reports on preparations for 2010, as well as present the preliminary results of ongoing work we plan to issue in the near future on the Bureau's efforts to build a complete and accurate address list. Additionally, I will provide our preliminary observations on the challenges that Hurricanes Katrina and Rita might pose for the Bureau's future activities and, more broadly, for the Bureau's continuity of operations planning to help it prepare for a range of events that could severely disrupt the census.

Importantly, our perspective on the census goes well beyond these recent studies. Because the decennial has grown in cost and complexity since 1970, we have been reviewing the national enumeration for decades on behalf of Congress. Over the years, through scores of reports and testimonies, we have acquired broad institutional knowledge that gives us a historical view of the key ingredients of a successful census.

Today's hearing is particularly timely. The Bureau is holding a test census in the central portion of Travis County, Texas, and at the Cheyenne River American Indian Reservation and Tribal Trust Lands in South Dakota, where it is evaluating key operations and equipment it plans to employ for the full enumeration in 2010. "Census Day" for this exercise is April 1, 2006; after this, the Bureau will have only one more major opportunity to assess its census taking-procedures—a "dress rehearsal" scheduled for 2008. Moreover, the actual census is little more than 4 years away, and before too long the Bureau will transition from preparatory to operational activities, leaving little room for delays and missteps.

With this in mind, I commend the subcommittee for calling today's hearing, as past experience has shown that strong and continuing congressional involvement—especially while there is still time to make

[1] See for example, GAO, *2010 Census: Cost and Design Issues Need to Be Addressed Soon*, GAO-04-37 (Washington, D.C.: Jan. 15, 2004), and GAO, *2010 Census: Basic Design Has Potential, but Remaining Challenges Need Prompt Resolution*, GAO-05-9 (Washington, D.C.: Jan. 12, 2005).

decisions and influence the direction of the census—is essential to the decennial's ultimate success. An accurate population count is critical because the Constitution requires a census to apportion seats in the House of Representatives. Census data are also used to redraw congressional districts, allocate approximately $200 billion in federal assistance to state and local governments each year, and for numerous other public and private sector purposes.

My remarks are based on our analysis of Bureau documents and data, and interviews with key Bureau officials. In addition, to get a street-level perspective of the performance of key operations, we visited the Texas and South Dakota test sites, as well as Queens, New York, and several counties in rural south-central Georgia, where an earlier field test was held in 2004. During these visits, we interviewed local census office managers and staff, viewed various data collection activities, and observed training sessions the Bureau held for two different field worker positions: address canvassers, who go door-to-door verifying addresses as part of the Bureau's effort to build a complete and accurate address list, and enumerators, who collect information from those households that do not return their initial census questionnaire.

My major point today is that the Bureau is further along in planning the 2010 Census compared to a similar point during the 2000 Census cycle. Particularly noteworthy is (1) the re-engineered design of the census, which holds promise for controlling costs and maintaining accuracy; (2) the Bureau's early planning process which was more rigorous than for the 2000 Census; and (3) the Bureau's greater willingness to outsource key census-taking operations that would be difficult for it to carry out on its own.

At the same time, it will be important for the Bureau to resolve issues that pose a risk to a successful census. Specific steps we have recommended in our prior work include (1) improving the reliability of the hand-held mobile computing devices (MCD) the Bureau plans to use for collecting field data, (2) ensuring census workers follow prescribed procedures, and (3) strengthening its human capital efforts so that it has the skill mix necessary to meet its future requirements. The Bureau is aware of these issues and has taken actions to address them. Future tests will shed light on the effectiveness of the Bureau's efforts.

As a backdrop to these findings, I want to highlight several broad themes that have emerged from our work over the years—lenses really—through which to view the Bureau's business environment. They are important

because they ultimately affect the Bureau's readiness to conduct the census and the quality of the results.

- First, because the scale of the census is enormous, streamlined and efficient operations are critical for cost-effectiveness. For example, during the 2000 Census, the Bureau hired more than 500,000 enumerators, temporarily making it one of the nation's largest employers; opened nearly 24,000 questionnaire assistance centers; processed 1.5 billion pieces of paper; and, in 10 weeks, followed up with 42 million households that did not mail back their census questionnaires. The size of the census means that small problems can magnify quickly, and big problems could be overwhelming. For example, 60 seconds might seem like an inconsequential amount of time, but in 2000, if enumerators had spent just 1 minute more at each household during nonresponse follow-up, it could have added almost $10 million in labor costs to the census, assuming a pay rate of around $13 per hour (wages ranged from $8.25 to $18.50 per hour for enumerators in 2000, depending on location).

- A second theme is the importance of sound risk management, as the risks to a successful census are interrelated, and a shortcoming in one operation could trigger other activities to spiral downward. For example, a low mail response rate would drive up the follow-up workload, which in turn would increase staffing needs and costs. Of course the reverse is also true, where a success in one operation could have a number of positive downstream impacts. Rigorous up-front preparations, testing, and where feasible, contingency planning, are the best ways to stave off problems. Likewise, management information systems capable of tracking key operations with real-time measures are essential because they enable the Bureau to quickly address trouble spots. The Bureau did this successfully in recruiting enumerators for the 2000 Census where, to help ensure it had a steady supply of candidates for its 500,000 enumerator positions, it set a recruiting goal of 2.4 million qualified applicants. Because the Bureau tracked the progress local census offices were making in meeting their individual goals, it was able to quickly raise pay rates and take other actions at those offices where recruiting was lagging. Partly as a result of its monitoring efforts, the Bureau exceeded its recruitment goal by 100,000 people.

- Third, it is important for the Bureau to stay on schedule, as the census is conducted against a backdrop of immutable deadlines and an elaborate chain of interrelated pre- and post-Census Day activities are predicated upon those dates. Specifically, the Secretary of Commerce is legally required to (1) conduct the census on April 1 of the decennial year, (2) report the state population counts to the President for purposes of congressional apportionment by December 31 of the decennial year, and (3) send population tabulations to the states for purposes of redistricting no later than one year after the April 1 census date. To meet these reporting requirements, census activities need to take place at specific times and in the proper sequence. Moreover, considerable risk could accompany any significant design changes that occur late in the decade because of the difficulties in properly testing, evaluating, and integrating them with existing operations. As Census Day approaches, the tolerance for any operational delays or changes becomes increasingly small.

- Fourth, the decennial census is a shared national undertaking, where Congress, other federal agencies, state and local governments, nonprofit and private organizations, and ultimately the American public, all play vital roles in securing a complete and accurate population tally. Recognizing this, the Bureau fosters partnerships with these various entities to help with such activities as recruiting census workers, boosting participation, and building the Bureau's master address list. Mobilizing and coordinating these organizations requires an enormous effort on the Bureau's part. During the 2000 Census, about 140,000 organizations participated in its partnership program, according to the Bureau.

Collectively, these themes point to the following: The decennial census is an inherently fragile endeavor. On the one hand, if all the enumeration activities perform as planned, the response rate is as expected, the Bureau meets its enumerator hiring goals, and operations stay on schedule, the 2010 Census will likely produce acceptable results. On the other hand, everything from a technological glitch to national and world events could trigger a chain of setbacks that could jeopardize the accuracy and completeness of the count. This is why it is so important for Congress to follow the census closely and help ensure it stays on track.

Background

Thorough and comprehensive planning is crucial to the success of any large, long-term project, especially one with the cost, complexity, and high

stakes of the decennial census. Indeed, the Bureau's past experience has shown that the lack of proper planning can increase the costs and risks of downstream operations.

Past experience has also underscored the importance of strong oversight of the census to (1) inform congressional decision making on budgetary and operational matters, (2) raise Congress's confidence that the Bureau has chosen an optimum design and will manage operations and control costs effectively, and (3) help ensure the progress the Bureau has made thus far in refining, planning, and testing census-taking activities, continues as the Bureau shifts into the operational phases of the decennial.

Given the escalating cost of the census in an era of serious national fiscal challenges, oversight will be particularly important. Bureau officials estimate the total life-cycle cost of the 2010 Census will be around $11.3 billion, which would make it the most expensive census in our country's history, even after adjusting for inflation.[2]

Although some cost growth can be expected, in part, because the number of housing units—and hence the Bureau's workload—has grown, the cost escalation has far exceeded the housing unit increase. The Bureau estimates that the number of housing units for the 2010 Census will increase by 10 percent over 2000 Census levels; meanwhile, the average cost per housing unit for 2010 is expected to increase by approximately 29 percent from 2000 levels (from $56 to $72), nearly five and a half times greater than the $13 it cost to count each household in 1970 (see fig. 1).

[2] The census life cycle extends over a number of years. For the 2000 Census, the life-cycle spanned from fiscal year 1991 through fiscal year 2003 when the Bureau completed its evaluation activities.

Figure 1: Decennial Census Average Cost per Housing Unit (in Constant Fiscal Year 2000 Dollars)

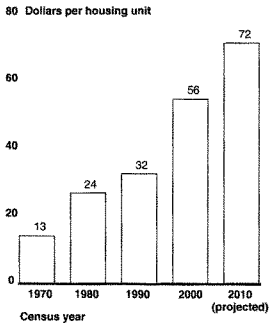

Source: GAO analysis of U.S. Census Bureau figures.

A key reason for the increasing cost of the census is that because of various societal trends such as concerns over personal privacy, more non-English speakers, and more people residing in makeshift and other nontraditional living arrangements, the Bureau is finding it increasingly difficult to locate people and get them to participate in the census. As a result, the Bureau needs to spend more money simply to achieve the accuracy of earlier enumerations. This can be seen, for example, in the rising cost of securing public participation in the census. During the 1990 Census, the Bureau spent an average of $0.88 per housing unit (in 2000 dollars) to market the census and was able to rely on a pro-bono advertising campaign. The response rate was 65 percent. For the 2000 Census, recognizing that extra effort would be needed to motivate participation, the Bureau used a paid advertising campaign developed by a consortium of private-sector advertising agencies. It cost an average of $3.19 per housing unit (in 2000 dollars) and achieved a response rate of 64 percent. As the Bureau plans for 2010, maintaining cost effectiveness will be one of the single greatest challenges confronting the agency.

The Bureau's Preparations for 2010 Are Progressing but Certain Challenges Will Need to Be Addressed

The Bureau's preparations for the 2010 Census appear to be further along than at a similar point during the planning cycle for the 2000 Census. For example, the fundamental design of the 2010 Census has the potential to contain costs and improve coverage and accuracy, and the Bureau's planning process for 2010 is generally more thorough than was the case for the 2000 Census. At the same time, the 2004 test and, to date, the 2006 test, have identified areas where improvements are needed. Uncovering trouble spots is an important objective of any test, thus it is not surprising, and, in fact, should be expected and commended that problems were found. Moreover, the Bureau has taken steps to resolve the issues that have surfaced. Remaining activities in the 2006 test, and the 2008 Dress Rehearsal, will help determine the effectiveness of the Bureau's efforts.

The Design of the 2010 Census Shows Promise

The Bureau developed a design for the 2010 Census early in the decade, and Congress has been supportive of the Bureau's approach. The situation 10 years ago was vastly different. In testimony before Congress in late 1995, we expressed concern that Congress and the Bureau had not agreed on the fundamental design and budget of the census, and that the longer this situation continued, the opportunity for a well-planned census would be lost and the greater the risk that hundreds of millions of dollars would be spent inefficiently.[3]

Key features of the design of the 2010 Census include the following:

- Enhancing procedures for building its address list, known as the Master Address File, and its associated geographic information system, called the Topologically Integrated Geographic Encoding and Referencing (TIGER)® database;[4]
- Replacing the census long-form questionnaire with the American Community Survey (ACS)[5]; and
- Conducting a short-form-only decennial census supported by early research and testing.

[3] GAO, *Decennial Census: Fundamental Design Decisions Merit Congressional Attention*, GAO/T-GGD-96-37 (Washington D.C.: Oct. 25, 1995).

[4] TIGER is a registered trademark of the U.S. Census Bureau.

[5] ACS is intended to be a monthly survey of 250,000 households.

Also noteworthy is the fact that for the 2010 Census, the Bureau plans to make the most extensive use of contractors in its history, turning to the private sector to supply a number of different mission-critical functions, including the Bureau's nationwide data processing activities, and improvements to the Master Address File and TIGER. The Bureau estimates that of the $11.3 billion total cost of the census, around $1.9 billion (approximately 17 percent) will be spent via its seven largest contracts which include information technology systems, advertising, and the leasing of local census offices.

The Bureau is relying more heavily on contractors because it recognizes it needs to look outside the agency to obtain the expertise and services essential for a successful enumeration. That said, the Bureau's contracting efforts during the 2000 Census did not always go smoothly, and it will be important for Bureau management to focus on its procurement activities to help ensure the 2010 contractors fulfill the Bureau's expectations. Our companion testimony at today's hearing provides greater detail on two of the Bureau's information technology contracts.[6]

In concept, the Bureau's approach has the potential to achieve its principal goals for the 2010 Census which include (1) increasing the relevance and timeliness of data, (2) reducing operational risk, (3) increasing coverage and accuracy, and (4) containing costs. However, some aspects of the design, including the use of technology that has never been employed for the decennial, as well as the heavy reliance on contractors, introduce new risk. This is not inappropriate as the need to secure a complete count and addressing problems with past censuses call for bold new initiatives that entail risk. What will be important is how effectively the Bureau manages those risks.

The 2010 Planning Process Is Generally More Rigorous Than for Past Efforts

Another sign of progress can be found in the thoroughness of the Bureau's planning process where the Bureau has taken several positive steps to correct problems it encountered when planning past censuses. For example, early in the decade, senior Bureau staff considered various goals for the 2010 Census and articulated a design to achieve those goals. Moreover, staff with operational experience in the census participated in

[6] GAO, *Census Bureau: Important Activities for Improving Management of Key 2010 Decennial Acquisitions Remain to be Done*, GAO-06-444T, (Washington, D.C.: Mar. 1, 2006).

the 2010 design process. According to Bureau officials, this was a departure from the 2000 planning effort when Bureau staff with little operational experience played key roles in the design process, which resulted in impractical reform ideas that could not be implemented.

At the same time, the Bureau's planning process could benefit from an overall business or project plan that (1) includes milestones for completing key activities; (2) itemizes the estimated cost of each component; (3) articulates a clear system of coordination among project components; and (4) translates key goals into measurable, operational terms to provide meaningful guidance for planning and measuring progress. Some, but not all of this information is available in various documents, but one would need to piece it together. Noting the importance of this information to inform congressional decision-making and oversight of the census, as well as to improve the Bureau's planning process, in our January 2004 report, we recommended that the Bureau combine this information into a single, comprehensive document. The Bureau disagreed with the recommendation although it said it would develop such a plan nonetheless and provide it to GAO, Congress, and other stakeholders. The Bureau has not yet issued this document.

Address File and Map Improvements Could Help Resolve Past Problems if Operational Challenges Are Resolved

A complete and accurate address list is the cornerstone of a successful census because it identifies all households that are to receive a census questionnaire, and serves as the control mechanism for following up with households that fail to respond. Although the Bureau went to great lengths to build a complete and accurate Master Address File for the 2000 Census, of the 116 million housing units contained in the database, the Bureau estimates it incorrectly included 2.3 million housing units and missed another 2.7 million housing units. In light of these and other problems, the Bureau concluded that enhancements to the Master Address File and TIGER were necessary to make census data more complete and accurate.

In the preliminary results of our ongoing work on enhancements to the Master Address File and TIGER, we found that the Bureau has developed procedures to help resolve each of the broad categories of problems experienced in 2000 including addresses that were duplicated, missed, deleted, and incorrectly located on a map (a problem known as geocoding error). The Bureau has several ongoing evaluations that should provide valuable information on the effectiveness of these procedures.

The Bureau is also taking steps to improve the accuracy of the TIGER maps which, among other benefits, should help prevent geocoding errors. In June 2002, the Bureau awarded an 8-year contract, in excess of $200 million intended to, among other tasks, correct in TIGER the location of every street, boundary, and other map feature so that coordinates are aligned with their true geographic locations. According to the Bureau, the contractor completed this work for 250 counties in 2003, 602 counties in 2004, and 623 counties in 2005. Furthermore, the contractor plans to deliver the remaining 1,758 county maps between 2006 and 2008.

However, based on this time line, it appears that several hundred county TIGER maps will not be updated in time for the Local Update of Census Addresses (LUCA) program, through which the Bureau gives local and tribal government officials the opportunity to review and suggest corrections to the address lists and maps for their jurisdictions. LUCA is to begin in July 2007 when, according to the current schedule, the Bureau will still have 368 counties to update in 2008 alone. These counties will not have the most current maps to review but will instead be given the most recent maps the Bureau has available. According to the Bureau, some of the maps have been updated for the American Community Survey, but others have not been updated since the 2000 Census, which could affect the quality of a local government's review. The Bureau is aware of the overlapping schedules, but told us that it needs to start LUCA in 2007 in order to complete the operation in time for address canvassing.

LUCA is an example of how the Bureau partners with external entities, tapping into their knowledge of local populations and housing conditions in order to secure a more complete count. In 1994, Congress required the Bureau to develop a local address review program to give local and tribal governments greater input into the Bureau's address list development process.[7]

When the Bureau conducted LUCA for the 2000 Census, the results were mixed. In our 1999 congressional testimony, we noted that many local governments said they were satisfied with specific aspects of the materials and assistance the Bureau provided to them. At the same time, LUCA may

[7] Census Address List Improvement Act, Pub. L. No. 103-430, Oct. 31, 1994.

have stretched the resources of local governments, and participation in the program could have been better. [8]

The census schedule will also be a challenge for an operation called address canvassing, where census workers are to walk every street in the country, verifying addresses and updating maps as necessary. The Bureau has allotted 6 weeks to verify the nation's inventory of 116 million housing units. This translates into a completion rate of over 2.75 million housing units every day. The challenge in maintaining this schedule can be seen in the fact that for the 2000 Census, it took the Bureau 18 weeks just to canvass "city-style" address areas, which are localities where the U.S. Postal Service uses house-number and street-name addresses for most mail delivery.

The Unreliability of Mobile Computing Devices Has Been Problematic

Of particular concern is the previous unreliability of the MCDs the Bureau plans to use for its address canvassing and nonresponse follow-up operations (see fig. 2).

Figure 2: The Census Bureau Plans to Use Mobile Computing Devices to Collect and Transmit Field Data

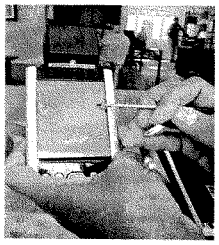

Source: GAO.

[8] GAO, *2000 Census: Local Address Review Program Has Had Mixed Results to Date*, GAO/T-GGD-99-184 (Washington, D.C.: Sept. 29, 1999).

For address canvassing, the MCDs are to be loaded with address information and maps; for nonresponse follow-up, they will be used in lieu of paper questionnaires and maps to collect household information. The MCDs are also equipped with global positioning system (GPS) receivers, a satellite-based navigational system to help enumerators locate street addresses and to collect coordinates for each structure in their assignment area. Bureau officials expect the MCDs will help improve the cost-effectiveness of the census by allowing it to eliminate millions of paper questionnaires and maps, improve the quality of address data, and update enumerators' nonresponse follow-up workload on a daily basis.

The move from paper to digital was a very positive step. At the same time, rigorous testing is essential to assess their durability, functionality, and that enumerators are able to use them. The MCDs were first evaluated for nonresponse follow-up as part of the 2004 Census Test, and for address canvassing in 2005 as part of the 2006 Census Test. The Bureau will use MCDs next month for nonresponse follow-up in the 2006 test.

In both our prior and ongoing work, we found the test results have been mixed. On the one hand, the census workers we observed had little difficulty using the MCDs. For example, address canvassers we interviewed said the electronic maps were accurate and that they were able to find their assignment areas with relative ease. On the other hand, the reliability of the MCDs proved troublesome during the 2004 and to date, the 2006 test. For example, in 2004, the MCDs experienced transmission problems, memory overloads, and difficulties with a mapping feature--all of which added inefficiencies to the nonresponse follow-up operation.

The Bureau is using MCDs made by a different manufacturer for the 2006 test which resolved some of these problems, but other difficulties emerged during address canvassing. For example, the device was slow to pull up and exit address registers, accept the data entered by the canvassers, and link map locations to addresses for multi-unit structures. Furthermore, the MCDs would sometimes lock up, requiring canvassers to reboot them.

Canvassers also found it difficult to transmit an address and map location that needed to be deleted from the master list. The Bureau was unable to fix this problem so canvassers had to return to the local census office where technicians dealt with the problem. The reliability of the GPS was also problematic. Some workers had problems receiving a signal, and when a signal was available, it was sometimes slow to locate assignment areas and correct map locations.

According to the Bureau, these problems reduced the productivity of the canvassers, and the Bureau stopped the operation 10 days after it was scheduled to finish. Even with the extension, however, the Bureau was unable to complete the job, leaving census blocks in both Austin and on the Cheyenne Indian Reservation unverified.

According to the Bureau, the problems were caused by unstable software and insufficient memory. The Bureau delayed the start of address canvassing for a month at both test sites to troubleshoot the MCDs. However, it was unable to fix all the problems and decided to move forward with the test.

The MCDs will be evaluated again next month as part of the 2006 Census Test and we will be on-site to assess the extent to which the Bureau has fixed the MCD problems. However, even if the MCDs prove to be more reliable, questions remain for the future. The Bureau has acknowledged that the MCD's performance is an issue, but believes it will be addressed as part of its contract for the Field Data Collection Automation (FDCA) program, which is aimed at automating the Bureau's field data collection efforts, and is scheduled to be awarded later this month (the MCDs used for the 2006 test are off-the-shelf purchases that were customized by the Bureau).

As a result, the 2008 Dress Rehearsal will be the first time the entire system—including the contractor's MCD—will be tested under conditions that are as close as possible to the actual census. If new problems emerge, little time will be left to develop and test any refinements.

Our field observations also suggest that the training of census workers could be improved to help ensure they follow proper procedures. Failure to do so could affect the reliability of census data. During the 2004 test, for example, we observed enumerators who did not read the coverage and race/ethnicity question exactly as worded, and did not properly use flashcards the Bureau had developed that were designed to help respondents answer specific questions. During the address canvassing operation for the 2006 test, we observed workers who were not properly verifying addresses, or were unsure of what to do when they happened upon dwellings such as duplex housing units. In our past work, we recommended that the Bureau take a more strategic approach to training, and that local census offices include in their instruction special modules

covering the unique living arrangements that might be prevalent in that particular jurisdiction.[9]

The Bureau acknowledged that the shortcomings we identified require improvement, and indicated that for the 2006 test, it will enhance training to reinforce the procedural requirements. The Bureau also intends to incorporate additional training to prepare enumerators to handle realistic situations encountered in their work. As part of our field work for the 2006 test, we will review the improvements the Bureau made to its training procedures.

Succession Planning and Management Will Be Important in the Years Ahead

If the operational challenges of conducting a census were not daunting enough, the Bureau faces the additional challenge of a possible brain drain. In our June 2005 report, we noted that the Bureau has projected that 45 percent of its workforce will be eligible to retire by 2010.[10] The Bureau has long benefited from its core group of managers and experienced staff who developed their expertise over several census cycles; their institutional knowledge is critical to keeping the census on track. Indeed, according to Bureau officials, many experienced employees retired or left the agency after the 1990 Census which affected planning efforts for the 2000 Census.

Leading organizations go beyond simply backfilling vacancies, and instead focus on strengthening both current and future organizational capacity. In this regard the Bureau acknowledges that re-engineering the 2010 Census requires new skills in project, contract, and financial management; advanced programming and technology; as well as other areas. To help address this important human capital issue, the Bureau has implemented various succession planning and management efforts to better position the agency to meet its future skill requirements.

Still, we found that the Bureau could take additional steps to enhance its succession planning and management efforts and recommended that the Bureau (1) strengthen the monitoring of its mission-critical workforce, (2) seek appropriate opportunities to coordinate and share core succession training and development programs with other outside

[9] See GAO-05-9, p. 30.

[10] GAO, *Human Capital: Selected Agencies Have Opportunities to Enhance Existing Succession Planning and Management Efforts*, GAO-05-585 (Washington D.C.: June 30, 2005).

agencies, and (3) evaluate core succession training and development programs to gauge the extent to which they contribute to enhancing organizational capacity. The Bureau agreed with our recommendations and indicated it was taking steps to implement them.

Hurricanes Katrina and Rita Highlight the Importance of Disaster Preparedness

On August 29, 2005, Hurricane Katrina devastated the coastal communities of Louisiana, Mississippi, Texas, and Alabama. A few weeks later, Hurricane Rita plowed through the border area of Texas and Louisiana.

Damage was widespread. In the wake of Katrina, for example, the Red Cross estimated that nearly 525,000 people were displaced. Their homes were declared uninhabitable, and streets, bridges, and other landmarks were destroyed. Approximately 90,000 square miles were affected overall and, as shown in figure 3, entire communities were obliterated.

Figure 3: Aerial Photograph of the Devastation in the Lower 9th Ward in New Orleans

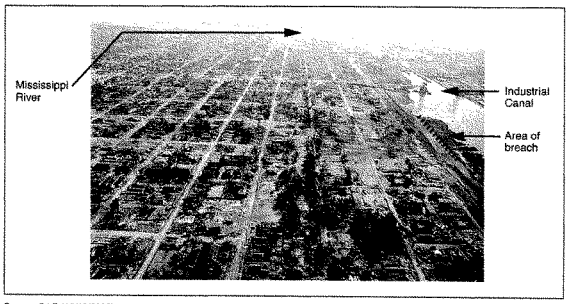

Source: GAO (10/13/2005).

The destruction and chaos caused by the storms underscore the nation's vulnerability to all types of hazards, and highlights how important it is for government agencies to consider disaster preparedness and continuity of operations as part of their planning. We have had a preliminary discussion with the Bureau on this topic and will continue to assess the Bureau's contingency planning as part of our oversight of the 2010 Census.

Moreover, it will be important for the Bureau to assess the impact the storms might have on its census-taking activities, as well as whether the affected areas have any special needs for data. Securing a complete count, a difficult task under normal circumstances, could face additional hurdles along the Gulf Coast, in large part because the baseline the Bureau will be working with—streets, housing stock, and the population itself—will be in flux for some time to come. According to the Bureau, different parts of the agency work on hurricane-related issues at different times, but no formal body has been created to deal with the hurricanes' impact on the 2010 Census. The Bureau anticipates that by 2008, as it is preparing to conduct address canvassing, people will have decided whether or not to return. At that time, the Bureau believes it will be in a better position to identify vacant, occupied, and new construction for 2010.

Although Census Day is still several years away, preliminary activities, such as operations for building the Master Address File, are to occur sooner. Consequently, a key question is whether the Bureau's existing operations are adequate for capturing the migration that has taken place along the Gulf Coast, the various types of dwellings in which people live, and the changes to roads and other geographic features that have occurred, or does the Bureau need to develop enhanced and/or additional procedures to account for them? For example, new housing and street construction could require more frequent updates of the Bureau's address file and maps, while local governments' participation in LUCA might be affected because of the loss of key personnel, information systems, or records needed to verify the Bureau's address lists and maps.

It will also be important for the Bureau to work with Congress and state and local governments to determine whether the hurricane-affected areas have any special data needs to track the economic and social well-being of the region and benchmark the recovery process. Although the decennial census would not be the instrument to collect this information, it might be feasible doing so through one of the Bureau's other survey programs. To date, the Bureau plans to do a special tabulation of its American Community Survey (ACS) data for the areas affected by Katrina that will provide information on the population that remained in the region. However, because of several methodological issues, it will not be an "official" ACS data product. The Bureau is also trying to use data from administrative records to update its population estimates of the area.

Building on these efforts, some key considerations for the future include the following:

1. How have the hurricanes affected the counties and parishes in the Gulf Coast region and what are the implications, if any, for the Bureau's future operations?

2. Which external and internal stakeholders including federal, state, and local government agencies, as well as nonprofit organizations and specific areas of expertise need to be included in the Bureau's decision-making process?

3. To what extent does the Bureau have a plan (including objectives, tasks, milestones, etc.) for assessing and acting on any new requirements imposed by the hurricanes?

4. Do the hurricane-affected areas have any special data requirements, and if so, how should they be addressed and which stakeholders need to be involved?

In summary, over the last few years, the Bureau has put forth a tremendous effort to help ensure the success of the 2010 Census. The Bureau is moving forward along a number of fronts, and has been responsive to the recommendations we made in our past work aimed at improving its planning process, address file, MCDs, training, human capital, and other census-taking activities. Still, some aspects of the census are proving to be problematic and a number of operational questions need to be resolved.

To be sure, challenges are to be expected in an endeavor as vast and complex as the decennial census. Moreover, shortcomings with prior censuses call for the Bureau to consider bold initiatives for 2010 that entail some risk. Thus, in looking toward the future, as the planning and testing phases of the 2010 Census begin to wind down, it will be important for Congress to monitor the Bureau's progress in (1) identifying and diagnosing problems, (2) devising cost-effective solutions, and (3) integrating refinements and fixes in time to be evaluated during the Dress Rehearsal in 2008. Indeed, while the ramp-up to 2010 is making progress, past experience has shown that Congress has every reason to remain vigilant. As we have done throughout the past several decades, we look forward to supporting the subcommittee in its decision-making and oversight efforts.

Mr. Chairman, Mr. Clay, this concludes my prepared statement. I would be pleased to respond to any questions that you or other members of the subcommittee might have.

Contact and Acknowledgments

For further information regarding this testimony, please contact Brenda S. Farrell on (202) 512-3604, or by e-mail at farrellb@gao.gov.

Individuals making contributions to this testimony included Betty Clark, Robert Goldenkoff, Carlos E. Hazera, Shirley Hwang, Andrea Levine, Anne McDonough-Hughes, Lisa Pearson, Michael Volpe, and Timothy Wexler.

GAO's Mission

The Government Accountability Office, the audit, evaluation and investigative arm of Congress, exists to support Congress in meeting its constitutional responsibilities and to help improve the performance and accountability of the federal government for the American people. GAO examines the use of public funds; evaluates federal programs and policies; and provides analyses, recommendations, and other assistance to help Congress make informed oversight, policy, and funding decisions. GAO's commitment to good government is reflected in its core values of accountability, integrity, and reliability.

Obtaining Copies of GAO Reports and Testimony

The fastest and easiest way to obtain copies of GAO documents at no cost is through GAO's Web site (www.gao.gov). Each weekday, GAO posts newly released reports, testimony, and correspondence on its Web site. To have GAO e-mail you a list of newly posted products every afternoon, go to www.gao.gov and select "Subscribe to Updates."

Order by Mail or Phone

The first copy of each printed report is free. Additional copies are $2 each. A check or money order should be made out to the Superintendent of Documents. GAO also accepts VISA and Mastercard. Orders for 100 or more copies mailed to a single address are discounted 25 percent. Orders should be sent to:

U.S. Government Accountability Office
441 G Street NW, Room LM
Washington, D.C. 20548

To order by Phone: Voice: (202) 512-6000
TDD: (202) 512-2537
Fax: (202) 512-6061

To Report Fraud, Waste, and Abuse in Federal Programs

Contact:

Web site: www.gao.gov/fraudnet/fraudnet.htm
E-mail: fraudnet@gao.gov
Automated answering system: (800) 424-5454 or (202) 512-7470

Congressional Relations

Gloria Jarmon, Managing Director, JarmonG@gao.gov (202) 512-4400
U.S. Government Accountability Office, 441 G Street NW, Room 7125
Washington, D.C. 20548

Public Affairs

Paul Anderson, Managing Director, AndersonP1@gao.gov (202) 512-4800
U.S. Government Accountability Office, 441 G Street NW, Room 7149
Washington, D.C. 20548

PRINTED ON RECYCLED PAPER

Mr. TURNER. Thank you.
Mr. Powner.

STATEMENT OF DAVID POWNER

Mr. POWNER. Chairman Turner, Ranking Member Clay, we appreciate the opportunity to testify on key acquisitions supporting the 2010 decennial census. The use of automation will be critical to the success of the upcoming census. Nearly a quarter of the 2010 respondents are expected to use the Internet. Key technologies will be used to standardize responses, and field-based enumerators plan to use nearly half a billion mobile computing devices.

However, acquiring technologies can present enormous challenges and risks if not managed effectively. These technology acquisition risks have been highlighted in numerous oversight hearings by Chairman Davis at the full committee, and your early attention to and leadership over the decennial acquisitions, Mr. Chairman, will hopefully ensure greater Bureau and contractor accountability.

This morning, as requested, I will summarize the importance and status of two key acquisitions that are critical to the 2010 decennial and key management activities that the Census Bureau is establishing that are crucial to delivering this technology on time, at cost, and with the promised functionality.

The Census Bureau has initiated efforts to acquire the Response Integration System and the Field Data Collection Automation program. The integration system is intended to receive and standardize census data from the various response modes, including census forms, telephone agents, and the Internet. It is also intended to standardize data collected from mobile computing devices, which are key to capturing non-response followup.

The mobile devices are part of the data collection program, which is also expected to provide office automation for regional and local census offices, as well as the telecommunications infrastructure. The integration contract was awarded to Lockheed Martin and its seven subcontractors in October, and the Field Data Collection contract was to be awarded at the end of this month. However, the Director's testimony this morning indicates the contract will occur in late spring. Both projects' life-cycle costs are expected to total over $1 billion. Both acquisitions involve ambitious schedules to deliver the needed functionality to support the planned 2008 dress rehearsal and are absolutely essential to achieving the goals of the decennial, including increased coverage, accuracy, and timeliness of the data.

Key management activities and processes are needed to effectively manage these acquisitions. Last June, we reported to you, Mr. Chairman, that the Census Bureau's institutional information technology management capacity still had room for improvement. Given these weaknesses and the importance of the integration system and the Field Data Collection program, you asked for a detailed review of these acquisitions to assist in your oversight of the decennial. While both projects have initiated steps to establish key project management activities, neither has the full set of capabilities needed to effectively manage these acquisitions. Incomplete management activities include those for requirements management, risk management, and contract monitoring. These increase

the risk that these projects will encounter problems in meeting cost and schedule expectations.

Given the immovable deadline for performing the 2010 decennial census, if unexpected problems occur, the Bureau will be faced with two options to address these problems: one, throwing more money at them; or, two, accepting systems with reduced functionality.

To address these program management shortfalls, my written statement includes a number of specific recommendations that focus on further defining exactly what is expected from these acquisitions, establishing robust risk mitigation programs that include early escalation and quick resolution of risks, and establishing clear metrics to oversee contractor performance.

The decennial management team appears to be dedicated to bolstering its management capabilities and have told us that they plan to complete these important activities as soon as possible. I would like to stress that these endorsed management activities ultimately are about placing the Government in charge of defining what it wants, being on top of risks, and having metrics to measure contractor performance. Relying on contractors for technical solutions is fine. Relying on them for requirements and performance metrics is not.

Mr. Chairman, the Response Integration and the Field Data Collection program are crucial to the success of the decennial. Although we commend efforts to date to establish these key contracts, additional management attention is needed to effectively oversee these acquisitions. Establishing the recommended management activities are critical to ensuring that the Bureau is in the driver's seat as these acquisitions process forward.

This concludes my statement, Mr. Chairman. Thank you for your leadership and oversight of the decennial census.

[The prepared statement of Mr. Powner follows:]

United States Government Accountability Office

GAO

Testimony

Before the Subcommittee on Federalism and the Census, Committee on Government Reform, House of Representatives

For Release on Delivery
Expected at 10:00 a.m. EST
Wednesday, March 1, 2006

CENSUS BUREAU

Important Activities for Improving Management of Key 2010 Decennial Acquisitions Remain to be Done

Statement of David A. Powner, Director
Information Technology Management Issues

GAO-06-444T

March 2006

GAO
Accountability · Integrity · Reliability

Highlights

Highlights of GAO-06-444T, testimony before the Committee on Government Reform, Subcommittee on Federalism and the Census

CENSUS BUREAU

Important Activities for Improving Management of Key 2010 Decennial Acquisitions Remain to be Done

Why GAO Did This Study

The Census Bureau plans to increase its use of automation to conduct the 2010 Decennial Census. Two key acquisitions are the Decennial Response Integration System (DRIS) and the Field Data Collection Automation program (FDCA). DRIS is expected to standardize and integrate data from census forms and other response modes. FDCA is expected to provide automation support for field data collection activities. Last year, you asked GAO to assess the status, plans, and management capabilities of both of these projects. In January 2006, GAO briefed the subcommittee staff on the results of that work. At your request, this testimony summarizes key findings from that briefing, including the status and management capabilities of each project.

What GAO Recommends

GAO recommends that the Census Director ensure that the bureau completes key activities needed to effectively manage its acquisitions. In commenting on a draft of GAO's briefing, bureau officials generally agreed with the recommendations and noted that time constraints and budgets had driven the bureau to proceed with its acquisitions before all of the recommended activities had been completed. Officials stated that they plan to complete these activities as soon as possible.

www.gao.gov/cgi-bin/getrpt?GAO-06-444T.

To view the full product, including the scope and methodology, click on the link above. For more information, contact David A. Powner at (202) 512-9286 or pownerd@gao.gov.

What GAO Found

The Census Bureau has initiated efforts to acquire DRIS and FDCA, key systems it needs to perform the 2010 Decennial Census. It awarded a contract for DRIS in October 2005; the system is currently in a design and development phase. The bureau expects to award a contract for FDCA development in March 2006. While both projects' life cycle cost estimates are currently considered procurement sensitive, together they are expected to make up a large portion of the $1.8 billion program to develop, test, and implement decennial census systems. Both acquisitions involve ambitious schedules in order to be able to deliver the needed functionality to support a planned 2008 census dress rehearsal and the eventual 2010 census activities.

While both project offices have implemented initial acquisition management activities, neither has the full set of capabilities they need to effectively manage the acquisitions (see table below). Specifically, the DRIS project completed its solicitation activities and the FDCA project has completed most of its solicitation activities. However, activities in other management areas have been initiated but not completed. For example, the DRIS project office has established baseline requirements for the acquisition, but the bureau has not yet validated them or implemented a process for managing the requirements. Also, while the FDCA project office has initiated efforts to oversee the contractor's performance, such as requiring earned value management reporting (a project management tool that integrates cost, schedule, and scope of work to aid project planning and control) and hiring staff with contracting experience, it has not yet determined which performance measures it will use to track the contractor and its own internal project office performance. Until these and other basic contract management activities are fully implemented, both projects face increased risks that the systems will experience cost overruns, schedule delays, and performance shortfalls.

Status of Acquisition Management Activities for Key Decennial Systems

Capability	DRIS	FDCA
Project and acquisition planning	○	○
Solicitation (the process leading up to selecting a contractor)	●	●[1]
Requirements development and management	○	○
Risk management	○	○
Contract tracking and oversight/project monitoring and control	○	○
Process and product quality assurance	○	○
Executive oversight/governance	○	○

● Key activities completed

○ Initiated, but key activities remain to be completed

Source: GAO analysis.

Mr. Chairman and Members of the Subcommittee:

We appreciate the opportunity to participate in today's hearing to discuss our work on key acquisitions supporting the 2010 Decennial Census. As you know, the Census Bureau is currently planning the decennial census—the nation's oldest and most comprehensive source of population and housing data. While apportionment—the proportional distribution of the number of members of the U.S. House of Representatives in each state on the basis of the population of each state—is the most widely known use of census data, the data are also used for congressional redistricting, managing federal agencies, and allocating federal funds. These data are disseminated to state and local governments, academia, and the private sector for use in understanding this country's people and their social, demographic, and economic characteristics. The next decennial census is required to begin on April 1, 2010, and the Secretary of Commerce is required to report to the President the tabulation of total population by states within 9 months of that date.[1]

In June 2005, we reported on the Census Bureau's progress in five information technology (IT) management areas—investment management, systems development/management, enterprise architecture management, information security, and human capital.[2] These IT management areas are important because they have substantial influence on the effectiveness of organizational operations and—if applied effectively—can reduce the risk of cost and schedule overruns, and performance shortfalls. We reported that, while the bureau had many practices in place, much remained to be done to fully implement effective IT management capabilities. We also made several recommendations to improve the bureau's management. Given the weaknesses we noted in the five management areas and the importance of IT investments to the upcoming 2010 Decennial Census, you asked us to review two planned Census Bureau acquisitions: the Decennial Response Integration System (DRIS)—a system for integrating paper, Internet, and telephone responses; and the Field Data Collection Automation (FDCA) program—the systems, equipment, and infrastructure field staff will use to collect census data.

[1]13 U.S.C. 141 (a) and (b).

[2]GAO, *Information Technology Management: Census Bureau Has Implemented Many Key Practices, but Additional Actions Are Needed*, GAO-05-661 (Washington, D.C.: June 16, 2005).

In January, we presented a detailed briefing to the committee and subcommittee staffs, which is provided in appendix I. At your request, I will discuss key findings from that briefing, specifically covering each project's status and management capabilities. An overview of the approach we used to perform this work—our objectives, scope, and methodology—is provided in appendix II.

Results in Brief

The Census Bureau has initiated efforts to acquire DRIS and FDCA, key systems it needs to perform the 2010 Decennial Census. It awarded a contract for DRIS in October 2005; the system is currently in a design and development phase. The bureau expects to award a contract for FDCA development in March 2006. While both projects' life cycle cost estimates are currently considered procurement sensitive, together they are expected to make up a large portion of the $1.8 billion program to develop, test, and implement decennial census systems. Both acquisitions involve ambitious schedules in order to be able to deliver the needed functionality to support a planned 2008 census dress rehearsal and the eventual 2010 census activities.

While both project offices have implemented initial acquisition management activities, neither has the full set of capabilities they need to effectively manage the acquisitions. Specifically, the DRIS project completed its solicitation activities and the FDCA project has completed most of its solicitation activities. However, activities in other management areas have been initiated but not completed. For example, the DRIS project office has established baseline requirements for the acquisition, but the bureau has not yet validated them or implemented a process for managing the requirements. Also, the project office identified project risks, but has not yet developed written mitigation plans or established milestones for completing key risk mitigation activities. Regarding FDCA, the project office has developed baseline functional requirements for the acquisition, but the bureau has not yet validated them. Also, while the FDCA project office has initiated efforts to oversee the prospective contractor's performance, such as requiring earned value management[3] reporting and

[3]Earned value management is a project management tool that integrates the investment scope of work with schedule and cost elements for investment planning and control. This method compares the value of work accomplished during a given period with that of the work expected in the period. Differences in expectations are measured in both cost and schedule variances.

hiring staff with contracting experience, it has not yet determined which performance measures it will use to track the contractor and its own internal project office performance. Additionally, the project office identified risks, but it has not yet implemented a risk management process. Specifically, it has not yet assigned responsibilities, developed detailed mitigation plans for managing the risks, or established milestones for completing key mitigation activities.

Until these and other basic management activities are fully implemented, both projects face increased risks that the systems will experience cost overruns, schedule delays, and performance shortfalls. We are making recommendations to the Director of the Census Bureau to ensure that both project offices complete key activities needed to effectively manage its acquisitions, including activities associated with effective project planning, requirements management, risk management, and performance measurement.

Background

The Census Bureau's mission is to serve as the leading source of quality data about the nation's people and economy. While apportionment is the most widely known use of census data, the data are also used for congressional redistricting, managing federal agencies, and allocating federal funds and they are disseminated to state and local governments, academia, and the private sector. Data from a decennial census provide official, uniform information gathered over the decades on the country's people and their social, demographic, and economic characteristics. They provide the baselines for countless other surveys and are used to develop sampling frames for a number of other federal data collections, such as the Current Population Survey, which is used to measure participation in the labor market and unemployment rates.[4]

The bureau's Decennial Census organization, which is responsible for the decennial census program, is comprised of several divisions and offices. The Decennial Management Division is responsible for implementing the decennial census. The Decennial Systems and Contracts Management Office manages selected system contracts supporting the decennial census.

[4]For more information see GAO, *Decennial Census: Overview of Historical Census Issues*, GAO/GGD-98-103 (Washington, D.C.: May 1, 1998).

To support the 2010 Decennial Census, the bureau manages a $1.8 billion program called "2010 Testing, Evaluation, and Systems Design," which calls for the acquisition and testing of systems and technologies. Two of the key acquisitions associated with this program are DRIS and FDCA. In addition, other key systems support the planned 2010 decennial census. Together, these and other systems are to support the collection, processing, and dissemination of census data. Figure 1 shows an overview of the key systems planned to support the 2010 Decennial Census.

Figure 1: Overview of Systems Supporting the 2010 Decennial Census

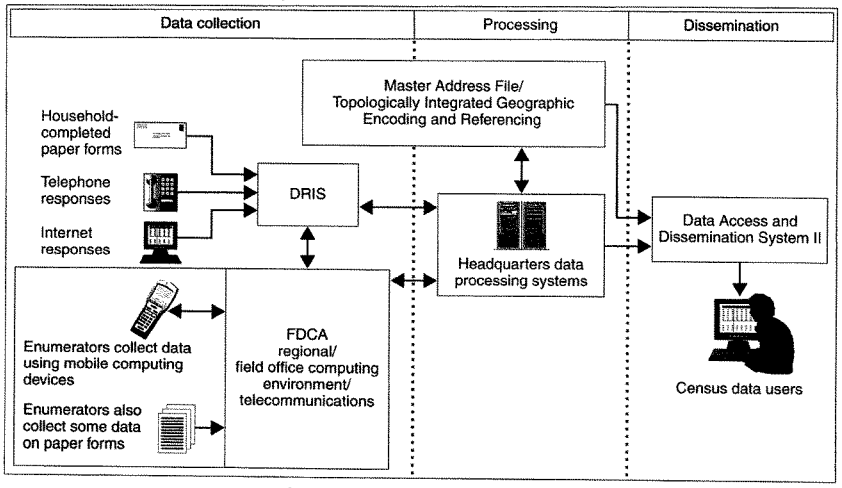

Source: GAO analysis of Census data.

To effectively manage major IT programs, organizations should use sound acquisition and management processes to minimize risks and thereby maximize chances for success. Such processes include project and acquisition planning, solicitation, requirements

development and management, risk management, contract tracking and oversight/project monitoring and control, quality assurance, and executive oversight (see table 1 for a description of each process). Such processes have been identified and endorsed by leading organizations such as the Software Engineering Institute and the Chief Information Officer's Council, and in our prior work analyzing best practices in industry and government. Our work has shown that such processes are significant factors in successful systems acquisitions and development programs, and they improve the likelihood of meeting cost and schedule estimates as well as performance.

Table 1: Selected Processes for Effectively Managing IT Programs

Process area	Description
Project and acquisition planning	Effective project planning involves establishing and maintaining plans defining project scope and activities, including overall budget and schedule, key deliverables, and milestones for key deliverables. It also involves ensuring that the project team has the skills and knowledge needed to manage the project and obtaining stakeholder commitment to the project plan. Effective acquisition planning involves developing an acquisition strategy that includes objectives, projected costs and schedules, and risks.
Solicitation	This activity includes identifying the needs within a particular acquisition, developing and implementing a solicitation plan, preparing for the evaluation of responses, issuing a solicitation package, evaluating responses, conducting supporting negotiations, and making recommendations for award of the contract.
Requirements development and management	Requirements development involves eliciting, analyzing, and validating customer and stakeholder needs and expectations. Requirements management involves establishing an agreed-upon set of requirements, ensuring traceability between operational and product requirements, and managing any changes to the requirements in collaboration with stakeholders.
Risk management	An effective risk management process identifies potential problems before they occur, so that risk-handling activities may be planned and invoked as needed across the life of the product and project in order to mitigate adverse impacts on achieving objectives. Key activities include identifying and analyzing risks, assigning resources, developing risk mitigation plans and milestones for key mitigation deliverables, briefing senior-level managers on high-priority risks, and tracking risks to closure.
Contract tracking and oversight/project monitoring and control	These processes provide oversight of the contractor's and the project office's performance, in order to allow appropriate corrective actions if actual performance deviates significantly from the plan. Key activities in tracking both the contractor's and the project office's performance include the selection of performance measures, communicating status, taking corrective actions, and determining progress.
Process and product quality assurance	This process area provides staff and management with objective insight into processes and associated work products. This includes the objective evaluation of project processes and products against approved descriptions and standards. Key activities include developing a quality assurance plan, assigning resources to quality assurance activities, and implementing quality assurance activities. Through quality assurance, the project team is able to identify and document noncompliance issues and provide appropriate feedback to project staff.

(Continued From Previous Page)

Process area	Description
Executive oversight and governance	Office of Management and Budget and GAO guidance call for agencies to establish IT investment management boards comprised of key executives to regularly track the progress of major systems acquisitions. These boards should have documented policies and procedures for management oversight of IT projects and systems, and should be able to adequately oversee the project's progress toward cost and schedule milestones and their risks. The board should also employ early warning systems that enable it to take corrective actions at the first sign of cost, schedule, and performance slippages.

Source: GAO summary of leading practices, including practices identified by the Software Engineering Institute, the Chief Information Officer's Council, and the Office and Management and Budget.

DRIS Project Under Way but Key Management Activities Remain To Be Implemented

DRIS is intended to receive, capture, and standardize census data provided by respondents via census forms, telephone agents, and the Internet. DRIS is also intended to standardize data collected via mobile computing devices and perform other functions, such as provide assistance to the public via telephone and the Internet.

On October 5, 2005, the bureau awarded a cost-plus-award-fee contract for DRIS to Lockheed Martin Corporation and its seven subcontractors to design, develop, and implement a system for standardizing and integrating the data from all of the response modes. The contract has a 6-year performance period, which includes designing and developing the system, conducting the census dress rehearsal in 2008, conducting 2010 census operations, and archiving data and disposing of equipment after the census is completed. After the contract was awarded, the project got off to a slow start because of a bid protest that has since been withdrawn. The DRIS project office is currently reassessing the project schedule due to delays associated with the bid protest. The project office plans to complete this assessment and perform an integrated baseline review by March 2006.[5]

The DRIS project office has initiated activities supporting key project management processes, but does not yet have the full set of acquisition management capabilities it needs to effectively manage the acquisition. Table 2 provides a summary of the status of the DRIS project in each of the process areas we evaluated.

[5]An integrated baseline review is a joint assessment by the contractor and the project team of the technical plans for a work segment as well as the adequacy of the budgets, resources, and schedules estimated to complete that work. This review results in a detailed plan for work activities, costs, and schedules that is used as the basis for tracking the earned value of the contractor's deliverables.

Table 2: Summary of the Status of DRIS Acquisition Management Capabilities

Capability	Status
Project and acquisition planning	Initiated, but key activities remain to be completed, such as finalizing the project management plan and identifying key deliverables beyond 2008.
Solicitation	Key activities completed and contract awarded ahead of schedule.
Requirements development and management	Initiated, but key activities remain to be completed, such as validating requirements and implementing a requirements management process.
Risk management	Initiated, but key activities remain to be performed such as preparing mitigation plans and holding senior-level briefings.
Contract tracking and oversight/project monitoring and control	Initiated, but project office performance measures have not yet been established.
Process and product quality assurance	Initiated, but a quality assurance process is not yet in place.
Executive oversight/governance	Initiated, but key governance activities remain to be completed.

Source: GAO analysis of Census Bureau data.

The DRIS project office has made progress in building management capabilities, but more remains to be done in key areas. For example, the project office completed its solicitation activities and awarded the contract ahead of schedule. In the area of requirements development and management, the project office established basic functional requirements for the acquisition and the Decennial Management Division has developed a detailed change control process for managing requirements for all 2010 Decennial Census systems, including DRIS. However, the division has not yet conducted a thorough validation of DRIS requirements, ensured traceability between DRIS and operational requirements, or approved the DRIS baseline requirements. Further, the division has not yet staffed the teams responsible for managing requirements or initiated any requirements management activities.

Until the bureau obtains validation and approval of DRIS requirements, it faces increased risk that new and changing requirements could be identified throughout the system's development. Changes identified late in the development cycle could be costly to implement and could increase the risk that the system will not be ready in time to support census activities. Further, until the bureau staffs and implements its planned requirements management process, it may not be able to effectively ensure that resulting products meet requirements.

In the area of risk management, the DRIS project office has developed a pre-award risk management plan that defines staff roles and responsibilities and includes procedures for identifying and tracking risks

and risk mitigation actions. Since awarding the contract, the team has updated the pre-award risks. However, the project team has not written mitigation steps or dates associated with the team's plans for addressing high-impact risks, and the project team has not conducted senior-level briefings. Until the project team develops risk mitigation plans with milestones for key activities and regularly briefs senior-level managers on risks and risk mitigation plans, it faces increased probability that DRIS will not be delivered on schedule, within budget, or perform as expected.

In the area of contract and project monitoring, the DRIS project team plans to provide contract tracking and oversight through reports including earned value management and monthly status reports. However, the project office has not yet selected detailed performance measures for tracking the contractor or its own internal progress (such as progress against planned milestones, number of risks opened and closed, number and frequency of changes to requirements, and frequency of quality assurance reviews). As a result, the project team is not able to ensure that it will be able to identify and document any noncompliance issues and take appropriate corrective actions.

One of the root causes of the project's delay in completing key management activities is that the Census Bureau lacks the organizational policies for managing major acquisitions. As a result, the success of major acquisitions such as DRIS is highly dependent on the knowledge, skills, and qualifications of the project offices. Without a minimum set of required steps and processes, Census acquisitions are at increased risk of being run in an ad hoc and chaotic manner—potentially resulting in increased project costs, delayed schedules, and performance shortfalls. In commenting on a draft of our briefing, agency officials acknowledged that the bureau does not have an organizational acquisition management policy, but noted that, even if there were a policy, time and budget constraints have driven the bureau to proceed with its acquisitions before all of the recommended activities have been completed. Officials stated that they plan to complete these activities as soon as possible.

FDCA Program Has Been Initiated but Key Management Activities Remain To Be Performed

The FDCA program is expected to provide automation support for field data collection operations for the 2010 Census. The program is expected to provide office automation for regional and local census offices; the telecommunications infrastructure for headquarters, regional, and local offices; and mobile computing devices for field workers. The bureau plans to have field-based enumerators use nearly 500,000 mobile computing devices to support decennial census field operations. Our companion testimony provides details on mobile computing devices and concerns about the reliability observed during testing.[6] Enumerators from local census offices will use these mobile computing devices to complete activities including address canvassing (visiting households to update address lists and collect global positioning coordinates to update maps) and conducting non-response follow-up (visiting households to obtain information from households that do not provide responses via mail, Internet, or phone). The bureau plans to award the FDCA contract, which is expected to be a cost-reimbursement contract with multiple incentives, on March 31, 2006. The contract is expected to have four phases—one planning and three execution phases.

The FDCA project office has initiated many key processes to oversee and manage the contract, but has not yet implemented the full set of acquisition management capabilities it needs to fully manage the acquisition. Table 3 provides a summary of the status of the FDCA project in each of the process areas we evaluated.

[6]GAO, *2010 Census: Planning and Testing Activities Are Making Progress*, GAO-06-465T (Washington, D.C.: March 1, 2006).

Table 3: Summary of the Status of FDCA Acquisition Management Capabilities

Capability	Status
Project and acquisition planning	Initiated, but key activities remain to be completed, such as identifying deliverables and milestones, and obtaining stakeholder buy-in on a project plan that includes the project's estimated costs, budget, and schedules.
Solicitation	Key activities completed; bureau officials said that they are on schedule to award the contract in March 2006.
Requirements development and management	Initiated, but key activities remain to be completed such as validating requirements.
Risk management	Initiated, but key activities remain to be performed such as assigning responsibilities for risks and preparing mitigation plans.
Contract tracking and oversight/project monitoring and control	Initiated, but key performance measures have not yet been established; bureau officials said that they expect to define these metrics after contract award.
Process and product quality assurance	Initiated; the quality assurance process is expected to be implemented after contract award.
Executive oversight/governance	Initiated, but key governance activities remain to be completed.

Source: GAO analysis.

The FDCA project office has made progress in building management capabilities, but more remains to be done in key areas. For example, the project office completed many key solicitation activities and plans to award a contract in March 2006. In the requirements development and management area, the project office and the Decennial Management Division developed FDCA-specific functional requirements with participation from stakeholders. The office has also drafted a requirements management plan. However, the division has not yet validated and approved a baseline set of operational requirements or ensured traceability between its operational requirements and the FDCA request for proposal. Until the bureau finalizes its operational requirements for the census and ensures that the FDCA request for proposal is consistent with the baseline requirements, the project will be at risk of having changes to the requirements, potentially affecting its ambitious development and implementation schedule.

In the risk management area, the project office has developed a draft risk management process and identified a number of high-level risks for the FDCA project. Also, to manage its schedule and technical risks, the project office has adopted an approach calling for pre-award prototype development. However, the FDCA project office has not yet revisited or analyzed the identified risks, begun prioritizing and tracking project risks, or documented risk mitigation plans. Until the team implements an

effective risk management process, it will lack a mechanism to address known and unknown problems.

Additionally, in the contract and project monitoring area, the project office has initiated efforts to oversee the contractor's performance, such as requiring earned value management reporting and hiring staff with contract tracking and oversight experience. However, the project office has not yet selected detailed performance measures for tracking the contractor or its own internal progress (such as progress against planned milestones, number of risks opened and closed, number and frequency of changes to requirements, and frequency of quality assurance reviews). Without such practices in place, the project team is not able to ensure that it will be able to identify problems and take appropriate corrective actions in a timely manner.

Conclusions

While the DRIS and FDCA project offices have initiated important steps in establishing sound and capable project management, neither has completed all of the important activities needed to adequately manage the acquisitions. Incomplete management activities, including those for requirements management, risk management, and contract and project monitoring, increase the risk that these projects will encounter problems in meeting cost and schedule expectations. Given the immovable deadline for performing the 2010 Decennial Census, if unexpected problems or changes occur, it is more likely that the bureau will face cost overruns or be forced to accept a system with limited functionality. Since the DRIS contract was awarded in October 2005, and the FDCA contract is expected to be awarded in March, it is critical that the DRIS project office expeditiously put in place key elements of sound acquisition management capability. Bureau officials acknowledge the importance of implementing these acquisition management processes and state that they plan do to so as soon as possible.

Recommendations for Executive Action

To ensure that the bureau adequately manages the DRIS project, we recommend that the Director of the Census Bureau direct the project office to take the following six actions:

- Complete the DRIS project plan and obtain stakeholders' commitment to the plan before initiating further development work.

- Obtain validation, management, and customer approval of DRIS requirements.
- Staff teams and perform planned requirements management activities.
- Develop mitigation plans with milestones for key activities, and regularly brief senior managers on important risks.
- Establish performance measures and monitor results for contractor and project office activities.
- Implement a quality assurance process by establishing responsibilities for assuring product quality, and defining how inspections, reviews, and walkthroughs will be used to measure quality.

Further, to ensure that the bureau improves its ability to manage this and other acquisitions, we recommend that the Director of the Census Bureau immediately establish and enforce a system acquisition management policy that incorporates best practices in system and software acquisition management (including those highlighted in our briefing).

To ensure that the bureau adequately manages the FDCA project, we recommend that the Director of the Census Bureau direct the project office to take the following four actions:

- Obtain stakeholder commitment to a project plan that includes estimated project costs and schedules, including deliverables and milestones.
- Obtain validation and approval of baseline requirements.
- Identify, prioritize, and assign responsibilities for risks, develop and implement risk mitigation plans and actions.
- Develop internal and contractor performance measures and prepare to track project cost, schedule, and performance.

Agency Comments and Our Evaluation

In providing oral and e-mail comments on a draft of our briefing, Census Bureau officials,–including the Associate Director for the Decennial Census and the Assistant Director for Decennial Information Technology and Geographic Systems–generally agreed with our recommendations and

stated that time constraints and budgets have driven the bureau to proceed with its acquisitions before all of the recommended activities have been completed. Officials stated that they plan to complete these activities as soon as possible.

Bureau officials also stated that they intend to rely on the DRIS and FDCA contractors to help refine requirements, project plans, and performance measures. However, our experience in reviewing major system acquisitions in recent years has shown that there are risks associated with relying too heavily on contractors to perform key management and oversight activities. For example, after a long history of significant cost increases and schedule delays on its Business System Modernization program, the Internal Revenue Service recently began transferring responsibility for key program management operations (including cost and schedule estimation and measurement, integration testing, and risk management) away from its contractor and back to the agency because of the contractor's poor performance in these areas.[7] Clearly, it is important for the government to exercise strong leadership in managing requirements, plans, risks, and performance measures. Bureau officials also offered technical corrections, which we incorporated in the briefing and in this statement as appropriate.

This concludes my statement. I would be pleased to respond to any questions that you or other members of the Subcommittee may have at this time.

Contacts and Acknowledgements

If you have any questions regarding this testimony, please contact David Powner at (202) 512-9286 or by e-mail at pownerd@gao.gov. Individuals making contributions to this testimony include Neil Doherty, Amanda Gill, Nancy Glover, Colleen Phillips, and Cynthia Scott.

[7]GAO, *Internal Revenue Service: Assessment of Fiscal Year 2006 Budget Request and Interim Results of the 2005 Filing Season*, GAO-05-416T (Washington, D.C.: April 7, 2005); and GAO, *Business Systems Modernization: Internal Revenue Service's Fiscal Year 2005 Expenditure Plan*, GAO-05-774 (Washington, D.C.: July 22, 2005).

Appendix I: GAO Briefing to Committee and Subcommittee Staffs on January 30, 2006

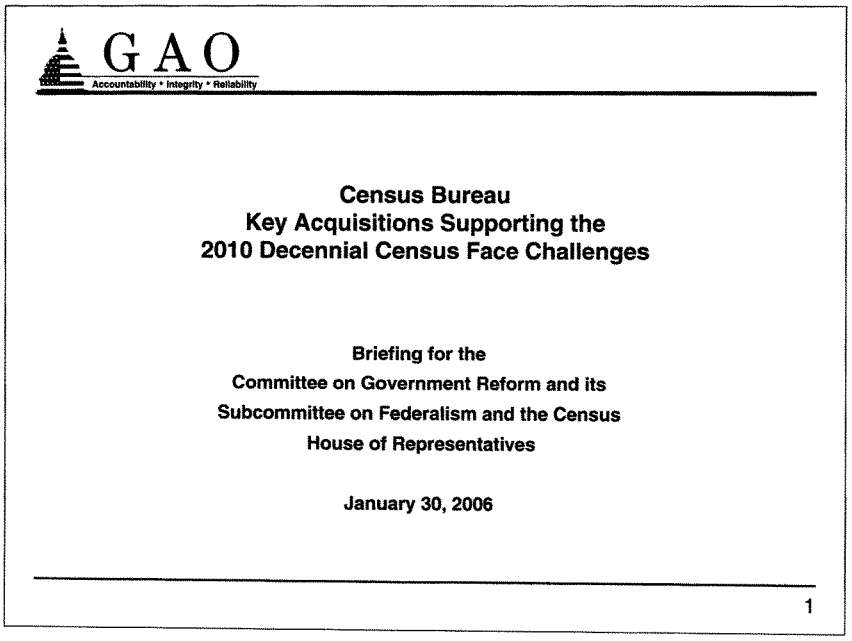

Briefing Outline

Introduction	3
Objectives	4
Scope and Methodology	5
Results in Brief	6
Background	8
Decennial Response Integration System	
• Overview, Status, and Plans	15
• Acquisition Management Capabilities	20
• Conclusions	36
• Recommendations	37
Field Data Collection Automation program	
• Overview, Status, and Plans	38
• Acquisition Management Capabilities	43
• Conclusions and Recommendations	57
Agency Comments and Our Evaluation	58

2

GAO
Accountability * Integrity * Reliability

Introduction

In June 2005, we reported on the Census Bureau's progress in five information technology (IT) management areas—investment management, systems development/management, enterprise architecture management, information security, and human capital.[1] We reported that, while the bureau had many practices in place, much remained to be done to fully implement effective IT management capabilities. We made several recommendations intended to improve these capabilities across the bureau.

Given the weaknesses we noted in the five IT management areas and the importance of IT investments to the upcoming 2010 Decennial Census, the Chairman of the House Committee on Government Reform and the Chairman and Ranking Member of the Subcommittee on Federalism and the Census requested that we assess the bureau's ability to manage important new acquisitions intended to support the decennial census.

[1]GAO, *Information Technology Management: Census Bureau Has Implemented Many Key Practices, but Additional Actions Are Needed*, GAO-05-661(Washington, D.C.: June 16, 2005).

3

Objectives

As part of the Census Bureau's plans to increase the use of automation and technology for the 2010 Decennial Census, the bureau will be undertaking several major acquisitions including the **Decennial Response Integration System (DRIS)**—a system for integrating paper, Internet, and telephone responses, and the **Field Data Collection Automation (FDCA)** program—the systems and support equipment for field office data collection activities.

Our objectives for each of these acquisitions are to:

- provide an overview, status, and plans (including costs, schedule, and deliverables) and
- determine if the bureau has capabilities in place to successfully manage and oversee the acquisitions.

4

GAO
Accountability * Integrity * Reliability

Scope and Methodology

To provide the project's overview, status, and plans, we analyzed current project documents including plans, acquisition documents, and deliverables, and we interviewed project officials.

To determine if the bureau has capabilities in place to successfully manage and oversee the acquisitions, we identified sound IT systems acquisition and management processes from industry standards, including those developed by the Software Engineering Institute, and compared them to the Census Bureau's practices for the selected acquisitions. We evaluated the following processes:

- project and acquisition planning
- solicitation
- requirements development and management
- risk management
- contract tracking and oversight/ project monitoring and control
- process and product quality assurance
- executive oversight and governance

In each process area, we evaluated project documentation and interviewed project officials to determine the status of the bureau's efforts.

We conducted our review between July 2005 and January 2006 at Census Bureau headquarters in Suitland, Maryland, in accordance with generally accepted government auditing standards.

5

Results in Brief

The Census Bureau has initiated efforts to acquire the major systems it needs to perform the 2010 Decennial Census, including the Decennial Response Integration System (DRIS), and the Field Data Collection Automation (FDCA) program. It awarded a contract for DRIS in October 2005 and the system is currently in a design and development phase. The bureau expects to award a contract for FDCA development in March 2006. While both projects' life cycle cost estimates are currently considered procurement sensitive, together they are expected to make up a large portion of the $1.8 billion program to develop, test, and implement decennial census systems. Both acquisitions involve ambitious schedules in order to be able to deliver the needed functionality to support a planned 2008 census dress rehearsal and the eventual 2010 census activities.

While both projects have implemented initial project management activities, neither has the full set of acquisition management capabilities they need to fully manage the acquisitions. For example, the DRIS project office has a draft project plan that contains many of the needed elements, but it has not yet completed the plan or obtained written stakeholder buy-in on it. It established baseline requirements for the acquisition, but the bureau has not yet validated them or implemented a process for managing the requirements. Also, the project office identified risks, but has not yet implemented a risk management process. Specifically, the project office has not yet developed written mitigation plans or established milestones for completing key risk mitigation activities.

6

Results in Brief

Regarding FDCA, its project office has initiated a project plan, but has not yet obtained written stakeholder buy-in on an overall plan that includes the project's estimated costs, budget, and schedules. It has identified requirements for the acquisition, but the bureau has not yet approved a validated set of requirements or ensured that the acquisition requirements are traceable to the broader set of operational requirements for the decennial census. Further, while the project office identified risks, it has not yet assigned responsibilities or developed detailed mitigation plans for managing the risks, or established milestones for completing key mitigation activities.

Until these and other basic management capabilities are fully implemented, both projects face increased risks that the systems will experience cost overruns, schedule delays, and performance shortfalls. We are making recommendations to both project offices and to the bureau to help improve acquisition management capabilities.

In commenting on a draft of this briefing, Census Bureau officials, including the Associate Director for the Decennial Census and the Assistant Director for Decennial Information Technology and Geographic Systems, generally agreed with our recommendations and stated that time constraints and budgets have driven the bureau to proceed with its acquisitions before all of the recommended activities have been completed. Officials noted that they plan to complete these activities as soon as possible. They also offered technical corrections, which we have incorporated as appropriate.

7

Background
Census Bureau Mission and Core Activities

The Census bureau's mission is to serve as the leading source of quality data about the nation's people and economy. The bureau's core activities include:

- conducting decennial, economic, and government censuses,
- conducting demographic and economic surveys,
- managing international demographic and socioeconomic databases and providing technical advisory services to foreign governments, and
- performing other activities such as producing official population estimates and projections.

Public and private decision makers use census population and socioeconomic data for various purposes. For example:

- decennial census data are used to determine congressional and state legislative districts and to distribute hundreds of billions of dollars in federal funds each year,
- federal agencies use census data to evaluate the effectiveness of established programs, and
- businesses use census data to target new services and products and to tailor existing ones to demographic changes.

8

GAO
Accountability * Integrity * Reliability

Background
Census Bureau Organization

The bureau is a large and complex organization. A conceptual view of the agency includes three core organizations, two auxiliary organizations that provide guidance and operational support for the core organizations, and three support organizations that provide administrative and technical support for the entire bureau. Each of these organizations is headed by an associate director, who reports to the deputy director of the Census Bureau.

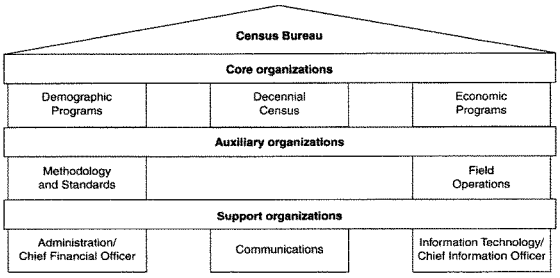

Source: U.S. Census Bureau, GAO.

9

GAO
Accountability * Integrity * Reliability

Background
The Bureau's Decennial Census

The bureau's Decennial Census organization is responsible for the decennial census program, the nation's oldest and most comprehensive source of population and housing information.

Conducting a decennial census involves:

- identifying and correcting addresses for all known living quarters in the United States,
- sending questionnaires to housing units,
- following up with non-respondents through personal interviews,
- trying to identify people with non-traditional living arrangements,
- managing a voluminous workforce responsible for follow-up activities,
- collecting census data from questionnaires, calls, and personal interviews,
- summarizing and tabulating census data, and
- disseminating census analytical results to the public.

The Decennial Census organization is comprised of divisions and offices, including the Decennial Management Division (DMD), which is responsible for implementing the decennial census, and the Decennial Systems and Contracts Management Office, which manages selected system contracts supporting the decennial census.

10

GAO
Accountability * Integrity * Reliability

Background
Plans for the 2010 Decennial Systems

To support the 2010 Decennial Census, the bureau manages a $1.8 billion program called "2010 Testing, Evaluation, and Systems Design," which calls for the acquisition and testing of systems and technologies. Two of the key acquisitions are the **Decennial Response Integration System (DRIS)** and the **Field Data Collection Automation (FDCA)** program.

DRIS is expected to be a system for collecting data and integrating census responses that come in through multiple routes, including census forms, telephone agents, the Internet, and from mobile computing devices used by field staff. DRIS is expected to standardize the response data and to provide it to other bureau systems for analysis and processing.

The FDCA program is expected to provide mobile computing devices, office automation, and an IT infrastructure to support collection of census data in local and regional offices. Mobile computing devices will be used to update the bureau's address list, to perform follow up at addresses for which no questionnaire was returned, and to perform activities to measure census coverage.

11

GAO
Accountability * Integrity * Reliability

Background
Plans for the 2010 Decennial Systems

In addition to DRIS and FDCA, other key systems support the planned 2010 decennial census. These include:

- master address file/topologically integrated geographic encoding and referencing—this is an existing system that contains the master list of addresses for the census
- headquarters data processing systems—these are existing systems used to process census data as well as a management information system
- data access and dissemination system II—this is a planned upgrade to an existing system to disseminate 2010 census data to the public

Together, these systems are to support the collection, processing, and dissemination of census data, as illustrated on the next page.

12

GAO
Accountability * Integrity * Reliability

Background
Plans for the 2010 Decennial Systems

Overview of systems supporting the 2010 Decennial Census

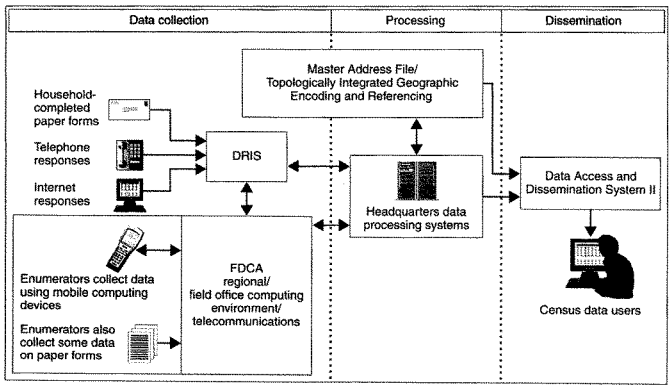

Source: GAO analysis of Census data.

13

GAO
Accountability * Integrity * Reliability

Background
Plans for the 2010 Decennial Systems

The bureau plans a series of tests in the years leading up to the decennial census.

2004: The bureau tested critical field operations using systems under conditions similar to those to be used during the decennial census. In particular, the agency studied the feasibility of using hand-held mobile computing devices equipped with Global Positioning System capability to conduct non-response follow-up operations. We recently reported on lessons learned during this test.[2]

2006: The bureau plans to test the methodology and functions of the integration of systems needed to carry out the census, focusing on efforts to automate non-response follow-up activities and the initiatives to update the address list.

2008: The bureau plans to conduct a final operational test of the entire complement of methodological, procedural, and systems innovations for the 2010 Decennial Census. This test is known as the Dress Rehearsal.

[2]GAO, *2010 CENSUS: Basic Design Has Potential, but Remaining Challenges Need Prompt Resolution,* GAO-05-9 (Washington, D.C.: Jan. 12, 2005).

14

GAO
Accountability * Integrity * Reliability

DRIS
Overview, Status, and Plans

During the prior decennial census, called Census 2000, responsibilities for designing and developing a system for capturing census data and related functions were shared by the bureau and several contractors. The bureau designed and developed a system for collecting data from the Internet, while one contractor developed a system for providing telephone assistance to the public, and another contractor developed a system for capturing data from responses returned by mail and from the field operations targeting non-responders. Another contractor provided the staffing and facilities for operating the data capture system while the census was underway. The bureau then integrated all of the data. Subsequently, the bureau found that this diversified approach resulted in data that was not standardized and added to the cost of processing census data.

For the 2010 Decennial Census, the bureau plans to have a single contractor design, develop, and implement a system (DRIS) for standardizing and integrating the data from all of the response modes (paper, telephone, Internet, and from field operations).[3] DRIS is intended to:

- receive, capture, and standardize census data provided by respondents via census forms, telephone agents, and the Internet,
- standardize data collected via mobile computing devices,
- provide the data to the headquarters data processing system,
- provide assistance to the public via telephone and the Internet, and
- monitor the quality and status of data capture operations.

[3]While the DRIS contractor is expected to standardize and organize response data from the hand-held computers, the scope of the DRIS contract does not include providing the systems or staff used for field enumeration operations.

15

GAO
Accountability * Integrity * Reliability

DRIS
Overview, Status, and Plans

DRIS is expected to process an estimated 90 million mailed paper responses, 40 million field responses, 9 million telephone calls, and 9 million Internet visits.

According to the bureau, qualitative improvements expected from DRIS include:

- integrating paper, Internet, and telephone responses within a workflow control system that will provide more timely information than existed in previous censuses and reduce the number of cases of non-response follow-up,
- providing near real-time data that will support the planned second mailing to non-responding addresses, and
- reducing redundant efforts for the Census Bureau and contractors that existed for different contracts during Census 2000 by integrating key functions under one contract. In particular, efforts in the areas of security, data integration, change control, and contractor administration are expected to be reduced.

16

DRIS
Overview, Status, and Plans

The bureau began acquisition planning for DRIS in 2003. Between 2003 and September 2005, the bureau spent about $7.5 million on researching data capture technologies, conducting web-based vendor briefings, obtaining comments from prospective vendors, and developing DRIS planning documents, strategies, and analyses. During this time, the bureau also established the DRIS project office within the Decennial Systems and Contracts Management Office (DSCMO).

Further, between February and August 2005, the bureau completed solicitation activities as follows:

- In February 2005, the bureau issued a request for proposal (RFP) for DRIS.
- From March 2005 through August 2005, the bureau solicitation team reviewed and evaluated proposals and obtained oral presentations from vendors.
- In August 2005, the solicitation team made a presentation to the Source Selection Evaluation Board and recommended a vendor for contract award.

17

GAO
Accountability * Integrity * Reliability

DRIS
Overview, Status, and Plans

On October 5, 2005 the bureau awarded the contract for DRIS to Lockheed Martin Corporation and its 7 subcontractors. The DRIS performance contract is a cost-plus-award-fee contract. The contract has a 6-year performance period divided into 3 primary phases as follows:

Phase I: October 2005 through December 2008
Includes delivering detailed design documentation, developing and testing DRIS, conducting the 2008 dress rehearsal, and identifying data centers for the 2010 Census.

Phase II: August 2008 through the end of January 2011
Includes opening data center sites, completing operational testing, conducting 2010 Census operations, and closing down the DRIS 2010 operations facilities once the census is complete.

Phase III: July 2010 through end of contract
Includes archiving DRIS data and images in accordance with National Archives and Records Administration guidelines and disposing of DRIS equipment once it is no longer needed.

Phases I and II of this contract are valued up to $553 million. The total life cycle cost of the project is considered procurement sensitive pending the pricing of phase III.

18

GAO
Accountability * Integrity * Reliability

DRIS
Overview, Status, and Plans

Phase I of the contract involves the following key activities

Activity	Due Date
Perform integrated baseline review[4]	March 2006
Deliver DRIS acquisition planning documents	February–October 2006
Certify DRIS as ready for use at all 2008 dress rehearsal facilities	December 2007
Deliver proposal for phase II—system operations and facilities	September 2008
Complete dress rehearsal and production activities	December 2008

The DRIS project team is currently reassessing these phase I dates due to delays associated with a bid protest that has since been withdrawn. It expects to identify new dates by March 2006. These new dates will likely result in the first modification to the contract.

Also, the team expects to work with the contractor during phase I to develop the milestones and deliverables for phases II and III.

[4]An integrated baseline review is a joint assessment by the contractor and the project team of the technical plans for a work segment as well as the adequacy of the budgets, resources, and schedules estimated to complete that work. This review results in a detailed plan for work activities, costs, and schedules that is used as the basis for tracking the earned value of the contractor's deliverables.

19

GAO
Accountability * Integrity * Reliability

DRIS
Acquisition Management Capabilities

To effectively manage major IT programs, organizations use sound acquisition and management processes to minimize risks and thereby maximize chances for success. Such processes have been identified by leading organizations such as the Software Engineering Institute, the Chief Information Officer's Council, and in our prior work analyzing best practices in industry and government. Key areas include:

- project and acquisition planning
- solicitation
- requirements development and management
- risk management
- contract tracking and oversight/project monitoring and control
- process and product quality assurance
- executive oversight and governance

Our work has shown that such processes are significant factors in successful systems acquisitions and development programs and that they improve the likelihood of meeting cost and schedule estimates as well as performance requirements.

20

GAO
Accountability * Integrity * Reliability

DRIS
Summary – Acquisition Management Capabilities

Summary of the status of DRIS acquisition management capabilities.

Capability	Status
Project and acquisition planning	Initiated, but key activities remain to be completed, such as finalizing the project management plan and identifying key deliverables beyond 2008.
Solicitation	Key activities completed and contract awarded ahead of schedule.
Requirements development and management	Initiated, but key activities remain to be completed, such as validating requirements and implementing a requirements management process.
Risk management	Initiated, but key activities remain to be performed such as preparing mitigation plans and holding senior-level briefings.
Contract tracking and oversight/project monitoring and control	Initiated, but project office performance measures have not yet been established.
Process and product quality assurance	Initiated, but a quality assurance process is not yet in place.
Executive oversight/governance	Initiated, but key governance activities remain to be completed.

21

GAO
Accountability * Integrity * Reliability

DRIS
Acquisition Management Capabilities

Project and acquisition planning
Effective project planning involves establishing and maintaining plans defining project scope and activities, including overall budget and schedule, key deliverables, and milestones for key deliverables. It also involves ensuring that the project team has the skills and knowledge needed to manage the project and obtaining stakeholder commitment to the project plan. Effective acquisition planning involves developing an acquisition strategy that includes objectives, projected costs and schedules, and risks.

The DRIS project team has

- defined the overall project scope, budget, and schedule,
- developed a draft project management plan that identifies key deliverables and milestones for these deliverables through the 2008 dress rehearsal,
- assigned an experienced and certified project manager and project team, and
- developed an acquisition strategy that outlines the acquisition objectives, scope, costs, schedules, and risks.

However, the project team has not yet finalized its project plan, identified key deliverables beyond 2008, or obtained stakeholder commitment to the plan. The project team has not yet completed these activities in part because there is no Census Bureau policy requiring them to do so prior to contract award.

Until a project plan is completed and approved, the project lacks assurance that it is moving in the right direction. Without this assurance, it is more likely to encounter unanticipated changes in direction—which could affect system cost, schedule, and deliverables.

22

GAO
Accountability * Integrity * Reliability

DRIS
Acquisition Management Capabilities

Solicitation
This activity includes identifying the needs within a particular acquisition, developing and implementing a solicitation plan, preparing for the evaluation of responses, issuing a solicitation package, evaluating responses, conducting supporting negotiations, and making recommendations for award of the contract.

The DRIS project team has:

- identified the needs for the DRIS acquisition including telephone, Internet, and paper data capture modes,
- developed source selection procedures,
- developed the evaluation criteria for evaluating vendors' proposals (including criteria for the technical and program management approaches),
- conducted training on the evaluation process and on using an automated tool, and
- submitted a recommendation for contract award to the source selection officer in August 2005.

The contract was awarded in October 2005.

23

DRIS
Acquisition Management Capabilities

Requirements development and management
Requirements development involves eliciting, analyzing, and validating customer and stakeholder needs and expectations. Requirements management involves establishing an agreed-upon set of requirements, ensuring traceability between operational and product requirements, and managing any changes to the requirements in collaboration with stakeholders.

To develop and manage DRIS requirements:

- DMD, the organization that oversees the project as well as the overall decennial census, developed draft operational requirements for the overall decennial census,
- the project team established basic functional requirements for the DRIS acquisition based on the data capture activities used during Census 2000 and assumptions for the 2010 Census data capture needs,
- stakeholders reviewed the DRIS requirements and made suggestions for clarifying them, and
- DMD developed a detailed process for managing requirements for all 2010 decennial systems, including DRIS; these are to be executed by DMD implementation teams.

24

GAO
Accountability * Integrity * Reliability

DRIS
Acquisition Management Capabilities

Requirements development and management (continued)

However, DMD has not yet conducted a thorough validation of DRIS requirements, ensured traceability between DRIS and operational requirements, or approved the DRIS baseline requirements. Part of the reason that these activities have not been completed is that there is no Census Bureau policy requiring them to do so prior to contract award. Further, DMD has not yet staffed the teams responsible for managing requirements or initiated any requirements management activities.

Until the project team obtains validation and approval of DRIS requirements and ensures these requirements are traceable to the operational requirements, it faces increased risk that new and changing requirements could be identified throughout the system's development.[5] Changes identified late in the development cycle could be costly to implement and could increase the risk that the system will not be ready in time to support census activities.

Further, until the bureau staffs and implements its planned requirements change management process, it may not be able to effectively ensure that resulting products meet requirements. As a result, DRIS may not provide the functionality needed or the bureau may experience cost increases and schedule delays.

[5]While there have not been any contract modifications to date, the project team expects to modify the contract to reflect the revised schedule.

25

GAO
Accountability * Integrity * Reliability

DRIS
Acquisition Management Capabilities

Risk Management
An effective risk management process identifies potential problems before they occur, so that risk-handling activities may be planned and invoked as needed across the life of the product and project in order to mitigate adverse impacts on achieving objectives. Key activities include identifying and analyzing risks, assigning resources, developing risk mitigation plans and milestones for key mitigation deliverables, briefing senior-level managers on high priority risks, and tracking risks to closure.

The DRIS project team has:

- developed a pre-award risk management plan that defines staff roles and responsibilities and includes procedures for identifying and tracking risks and risk mitigation actions,
- identified pre-award risks including
  - insufficient project office or contracting office resources
  - a bid protest
  - inadequate funding
  - failure to obtain agreement on quality control operations
  - failure to mitigate privacy risks
  - inadequate system sizing and related testing
  - design not flexible enough to accommodate changes in technology related to security
  - failure to document and test external interfaces
- assigned responsibilities for managing the risks and discussed mitigating actions, and
- participated in monthly meetings to analyze and discuss the status of certain pre-award risks.

26

GAO
Accountability * Integrity * Reliability

DRIS
Acquisition Management Capabilities

Risk Management (continued)

Since contract award in October 2005, the project team has:

- assigned a risk manager to provide oversight for the risk program,
- implemented a tool for tracking risks and actions taken, and
- reviewed risks and updated the risk database.

Also, the project team plans to:

- conduct monthly internal reviews of DRIS risks and refer high risks to higher-level officials for input and approval of actions,
- participate in the contractor's risk reviews and monitor the contractor's risk management plans as part of the contract's surveillance process, and
- implement a process to assess risks based on the probability of occurrence and the impact on business drivers.

27

GAO
Accountability * Integrity * Reliability

DRIS
Acquisition Management Capabilities

Risk Management (continued)

However, in the months since the contract was awarded, the project team has not developed written risk mitigation plans, identified milestones for key mitigation activities, or briefed senior management on its risks and risk mitigation plans. Specifically, there are no written mitigation steps or dates associated with the agencies' plans for addressing high-impact risks, and senior-level briefings on these risks have not been held. Part of the reason that these activities have not been completed is that there is no organizational policy requiring completion of these activities.

Until the project team develops risk mitigation plans with milestones for key activities, and regularly briefs senior-level managers on risks and risk mitigation plans, it faces increased probability that DRIS will not be delivered on schedule, within budget, or perform as expected.

28

GAO
Accountability * Integrity * Reliability

DRIS
Acquisition Management Capabilities

Contract tracking and oversight/project monitoring and control
These processes provide oversight of the contractor's and the project office's performance, in order to allow appropriate corrective actions if actual performance deviates significantly from the plan. Key activities in tracking both the contractor's and the project office's performance include the selection of performance measures, communicating status, taking corrective actions, and determining progress.

The project team is responsible for ensuring that the contractor's performance stays within cost and schedule thresholds for each phase of the DRIS contract. Therefore, the project team plans to provide contract tracking and oversight through:

- earned value management reports
- contractor performance reports
- program management reviews
- monthly status reports

During Phase 1, the project team plans to determine the detailed requirements for these activities.

29

DRIS
Acquisition Management Capabilities

Contract and Project Monitoring and Control (continued)

However, the project office has not yet selected detailed performance measures for tracking the contractor or its own internal progress (such as progress against planned milestones, number of risks opened and closed, number and frequency of changes to requirements, and frequency of quality assurance reviews), in part because there is no Census policy requiring that these measures be implemented. Without such performance measures, the team cannot perform the other key activities of communicating status, taking corrective actions, and determining progress.

As a result, the project office's view into when performance deviates from plans or when key activities are showing troubling trends is limited. This can lead to unexpected cost increases, schedule delays, and performance shortfalls.

30

GAO
Accountability * Integrity * Reliability

DRIS
Acquisition Management Capabilities

Process and Product Quality Assurance
This process area provides staff and management with objective insight into processes and associated work products. This includes the objective evaluation of project processes and products against approved descriptions and standards. Key activities include developing a quality assurance plan, assigning resources to quality assurance activities, and implementing quality assurance activities. Through quality assurance, the project team is able to identify and document noncompliance issues and provide appropriate feedback to project staff.

The DRIS project team has identified several approaches that it plans to use to oversee the quality of deliverables and services produced by the contractor. These include:

- requirements traceability and walkthroughs
- design walkthroughs
- peer reviews
- random inspections
- formal software quality assurance audits conducted by independent staff in the contractors' company

The project team plans to assign technical monitors to monitor, assess, document, and report on the contractor's performance. The team also expects the contractor to perform its own quality control methods to ensure that DRIS meets the government's requirements. The contractor's quality assurance plan is due in June 2006.

31

DRIS
Acquisition Management Capabilities

Process and Product Quality Assurance (continued)

However, the project team has not yet established a quality assurance plan, assigned resources, or implemented a quality assurance process. Specifically, the team has not yet determined how they will use the planned inspections, reviews, and walkthroughs to evaluate product quality. The delay in implementing this process is due in part to a lack of Census policy requiring these processes be in place prior to or soon after contract award. As a result, the project team is not able to ensure that it will be able to identify and document any noncompliance issues and take appropriate corrective actions.

32

GAO
Accountability * Integrity * Reliability

DRIS
Acquisition Management Capabilities

Executive Oversight and Governance
Office of Management and Budget and GAO guidance call for agencies to establish IT investment management boards comprised of key executives to regularly track the progress of major systems acquisitions. These boards should have documented policies and procedures for management oversight of IT projects and systems, and should be able to adequately oversee the project's progress toward cost and schedule milestones and their risks. The board should also employ early warning systems that enable it to take corrective actions at the first sign of cost, schedule, and performance slippages.

The DRIS project received executive level oversight during early project planning:

- the project was presented to key executives from the Department of Commerce IT Review Board and the Census Information Technology Governing Board (these boards include executive level managers from all bureau directorates, including the chief information officer and the chief financial officer),
- the project team established an acquisition review team consisting of key information technology, acquisition, legal and program managers from the Census Bureau and the Department of Commerce to review and approve acquisition documents,
- the project manager participated in meetings with Commerce and Census Bureau executives, and
- the project team worked with senior acquisition officials to develop acquisition planning and solicitation documents.

33

DRIS
Acquisition Management Capabilities

Executive-level oversight for DRIS is to continue as follows:

- The DRIS project manager is reporting progress directly to the chief of the Decennial Systems and Contracts Management Office.
- The DRIS Program Office is reporting weekly on the status of the DRIS project to Decennial Management Division officials.
- The DRIS Program Office is expected to participate in quarterly reviews with the Commerce Information Technology Review Board, Census Bureau managers, and the Associate Director for Decennial Census Leadership Team.
- Commerce and Census executive-level IT governing boards expect to review the DRIS project as part of its annual preparation for meeting OMB requirements, under the 2010 Testing, Evaluation, and System Design program.

34

GAO
Accountability * Integrity * Reliability

DRIS
Acquisition Management Capabilities

However, in June 2005, we reported that the Census Bureau's executive oversight of IT projects was incomplete.[6] Specifically, we noted that the bureau lacked

- written procedures outlining the IT investment board's operations and ensuring consistent investment management and decision making practices and
- written policies and procedures for monitoring the progress of its IT projects and systems.

As a result, we reported that the bureau lacks assurance that investment oversight and decision making is being performed in a consistent and repeatable manner, and that consistent and appropriate actions will be taken when cost, schedule, and performance expectations are not met. We recommended that the bureau develop and implement these policies and procedures. The bureau agreed to implement these recommendations, and expects to do so by the end of July 2006.

Until these efforts are completed, the bureau cannot ensure that it is providing effective and consistent oversight for the DRIS project.

[6]GAO-05-661.

35

GAO
Accountability * Integrity * Reliability

DRIS Conclusions

While the DRIS project team has initiated important steps in establishing a sound and capable project management office, it has not yet completed important activities it needs to adequately manage this acquisition. Incomplete project plans, requirements, and risk management activities increase the risks that this project will encounter problems in meeting cost and schedule expectations. Given that the contract was awarded in October and is currently under way, it is critical that the DRIS project office expeditiously put in place key elements of a sound acquisition management capability.

One of the root causes of the project's delay in completing key management activities is that the Census Bureau lacks organizational policies for managing major acquisitions. As a result, the success of major acquisitions such as DRIS and FDCA are extremely dependent on the knowledge, skills, and qualifications of the project teams. Without a minimum set of required steps and processes, Census acquisitions are at increased risk of being run in an ad hoc and chaotic manner—potentially resulting in increased project costs, delayed schedules, and performance shortfalls.

36

GAO
Accountability * Integrity * Reliability

DRIS Recommendations

To ensure that the bureau adequately manages the DRIS project, we recommend that the project office take the following six actions:

- complete the DRIS project plan and obtain stakeholders' commitment to the plan before initiating further development work,
- obtain validation and management and customer approval of DRIS requirements,
- staff teams and perform planned requirements management activities,
- develop mitigation plans with milestones for key activities, and regularly brief senior managers on important risks,
- establish performance measures and monitor results for contractor and project office activities, and
- implement a quality assurance process by establishing responsibilities for assuring product quality, and defining how inspections, reviews, and walkthroughs will be used to measure quality.

Further, to ensure that the bureau improves its ability to manage this and other acquisitions, we recommend that the Director of the Census Bureau immediately establish and enforce a system acquisition management policy that incorporates best practices in system and software acquisition management (including those highlighted in this briefing).

37

GAO
Accountability * Integrity * Reliability

FDCA
Overview, Status, and Plans

The Field Data Collection Automation (FDCA) program is expected to provide automation support for field data collection operations for the 2010 Census. Specific requirements include:

- office automation for the twelve regional census centers, the Puerto Rico area office, and more than 450 local census offices,
- the telecommunications infrastructure for headquarters, regional, and local offices,
- mobile computing devices for field workers,
- integration with other 2010 Census systems (e.g., DRIS and headquarters processing systems), and
- development, deployment, technical support, de-installation, and disposal services.

Automating field data collection activities is expected to help reduce overall 2010 Census costs as well as improve data quality and operational efficiency.

38

FDCA
Overview, Status, and Plans

Mobile computing devices are a key technology component of FDCA. Census plans to have field-based enumerators use nearly 500,000 mobile computing devices to support the following decennial census functions:

- case management and automated payroll for enumerators,
- address canvassing (visiting households to update address lists and collect global positioning system coordinates to update maps),
- non-response follow-up (visiting households to obtain information from those that did not provide responses via mail, Internet, or phone),
- assignment updating to avoid unnecessary follow-up on late responses,
- data transmission, and
- conducting additional interviews at a sample of households in order to help measure census undercounts or overcounts.

39

GAO
Accountability * Integrity * Reliability

FDCA
Overview, Status, and Plans

In fiscal year 2002, the bureau conducted market research on purchasing mobile computing devices and then purchased and tested these devices during the 2004 census test. After encountering technical problems and realizing that they lacked resources and expertise to manage the project in-house, bureau officials decided to use an integration contractor to help develop and manage the FDCA project.

The bureau has:

- established a FDCA project office in January 2005
- held an industry symposium in February 2005
- issued a draft RFP and a pre-solicitation notice in April 2005, requesting that vendors submit examples of previous experience with projects similar to FDCA and describe the challenges facing the FDCA project. (Based on these proposals, the bureau then invited five vendors to develop and test prototypes for address canvassing. Of the five, three vendors chose to do so.)
- released the final RFP in June 2005, and
- conducted a technical exchange period from October to December 2005, during which the three vendors developed prototypes and the FDCA project team evaluated draft proposals.

40

GAO
Accountability * Integrity * Reliability

FDCA
Overview, Status, and Plans

Project officials acknowledge that the FDCA schedule is ambitious. Key near-term activities include:

Final proposals and prototypes due	January 20, 2006
Final evaluation	Feb. 6–Mar. 17, 2006
Source evaluation board review/decision	March 20–30, 2006
Contract award	March 31, 2006
Integrated baseline review	March 31–May 31, 2006
Dress rehearsal offices open (FDCA office automation ready)	January 2007
Dress rehearsal address canvassing (using FDCA mobile computing devices)	April-May 2007

41

GAO
Accountability * Integrity * Reliability

FDCA
Overview, Status, and Plans

The FDCA contract is expected to be a cost-reimbursement contract with multiple incentives. Cost estimates for FDCA are considered procurement sensitive.

The FDCA RFP calls for a baseline planning period and three execution periods as follows:

- **Baseline planning period**: March 2006—May 2006
  - involves the project team and contractor reaching agreement on schedule, cost, quality, scope, and technical performance measurement for the first contract execution period.
- **Execution period 1**: June 2006—December 2008
  - includes activities leading up to and during the 2008 dress rehearsal
- **Execution period 2**: January 2009—September 2011
  - includes activities leading up to and during the 2010 Census
- **Execution period 3**: August 2010—December 2011
  - includes activities to wrap up operations after the completion of the 2010 Census

42

GAO
Accountability * Integrity * Reliability

FDCA
Summary – Acquisition Management Capabilities

Summary of the status of FDCA acquisition management capabilities.

Capability	Status
Project and acquisition planning	Initiated, but key activities remain to be completed, such as identifying deliverables and milestones, and obtaining stakeholder buy-in on a project plan that includes the project's estimated costs, budget, and schedules.
Solicitation	Key activities completed; the contract is expected to be awarded in March 2006.
Requirements development and management	Initiated, but key activities remain to be completed, such as validating requirements.
Risk management	Initiated, but key activities remain to be performed such as assigning responsibilities for risks and preparing mitigation plans.
Contract tracking and oversight/project monitoring and control	Initiated, but key performance measures have yet not been established.
Process and product quality assurance	Initiated; the quality assurance process is expected to be implemented after contract award.
Executive oversight/governance	Initiated, but key governance activities remain to be completed.

43

GAO
Accountability * Integrity * Reliability

FDCA
Acquisition Management Capabilities

Project and acquisition planning
Effective project planning involves establishing and maintaining plans defining project scope and activities, including overall budget and schedule, key deliverables, and milestones for key deliverables. Project planning also involves ensuring that the project team has the skills and knowledge needed to manage the project and obtaining stakeholder commitment to the project plan. Effective acquisition planning involves developing an acquisition strategy that includes objectives, projected costs and schedules, and risks.

Regarding project and acquisition planning, the FDCA project office has:

- defined the overall project scope and obtained an independent government cost estimate,
- developed a project management plan that documents objectives and high-level plans for managing the acquisition,
- established a project team with experience and certification in project management;
- involved stakeholders in planning, and
- developed a high-level acquisition strategy that includes objectives, projected costs, and schedules.

44

FDCA
Acquisition Management Capabilities

Project and acquisition planning (continued)

However, the office has not yet:

- established an overall project schedule (including deliverables and milestones) for the project team and for the contractor for each contract execution period, or
- obtained stakeholder commitment to a comprehensive project management plan that includes the project's estimated costs, budget, and schedules.

Bureau officials expect the project's costs and many management processes to be finalized shortly after the contract is awarded in early 2006, and they plan to work with the contractor to complete a master product schedule and integrated baseline review during the initial baseline planning period. By that time, Decennial Management Division (DMD) officials also plan to have the schedule for key dress rehearsal activities complete so that it can be considered during the integrated baseline review.

45

GAO
Accountability * Integrity * Reliability

FDCA
Acquisition Management Capabilities

Project and acquisition planning (continued)

In commenting on a draft of this briefing, bureau officials reiterated that they have an independent government cost estimate, an overall budget that they did not share with us due to its sensitivity, and an overall schedule for census activities. Officials also noted that they do not believe they can finalize cost, budget, deliverables, and milestones until after the contract is awarded because they are contracting for a solution—not a set of services or specific products.

While we acknowledge the various activities that the bureau has undertaken to begin planning the FDCA project and the fact that a project plan will continue to evolve as the program proceeds, the FDCA project management plan does not provide stakeholders and other reviewers a comprehensive overview of the project's estimates of costs, schedules, and deliverables. Such a plan is often used to form a baseline for the program and to obtain buy in from stakeholders.

Until the bureau completes key activities, including establishing budgets and schedules and documenting stakeholder commitment to its plans, it lacks assurance that reasonable plans for the project have been developed, and faces increased risk that the project may not achieve expected cost, schedule, and technical performance goals.

46

GAO
Accountability * Integrity * Reliability

FDCA
Acquisition Management Capabilities

Solicitation
This activity includes identifying the needs within a particular acquisition, developing and implementing a solicitation plan, preparing for the evaluation of responses, issuing a solicitation package, evaluating responses, conducting supporting negotiations, and making recommendations for award of the contract.

The project office has

- identified needs for the FDCA acquisition,
- developed criteria for evaluating vendor proposals,
- generated the solicitation package,
- developed a source selection plan, and
- conducted training on the evaluation process.

In addition, the project office has begun evaluating proposals, has completed a technical exchange process, and plans to obtain recommendations from the Source Selection Board for the award of the contract in March 2006.

47

GAO
Accountability * Integrity * Reliability

FDCA
Acquisition Management Capabilities

Requirements Development and Management
Requirements development involves eliciting, analyzing, and validating customer and stakeholder needs and expectations. Requirements management involves establishing an agreed-upon set of requirements, ensuring traceability between operational and product requirements, and managing any changes to the requirements in collaboration with stakeholders.

To develop and manage requirements,

- DMD developed draft operational requirements for the 2010 Decennial Census,
- the project office and DMD developed FDCA-specific functional requirements (listed in the RFP) with participation from stakeholders,
- the project office selected automated tools for tracking requirements in the RFP and proposed changes to those requirements,
- the project office drafted a requirements management plan, and
- DMD developed a detailed change control process for managing requirements for all 2010 decennial systems, including FDCA.

Further, DMD plans to staff the implementation planning teams responsible for managing changes to requirements, and initiate requirements management activities after the FDCA contract is awarded.

48

GAO
Accountability * Integrity * Reliability

FDCA
Acquisition Management Capabilities

Requirements development and management (continued)

However, DMD has not yet
- validated and approved a baseline set of operational requirements, or
- ensured traceability between its operational requirements and the FDCA RFP.

DMD officials attribute the delay in finalizing operational requirements primarily to the challenge of managing the magnitude and scope of the census and its unique environment. Until the bureau finalizes its operational requirements for the census and ensures that the FDCA RFP is consistent with the baseline requirements, the project will be at risk of later changes to the requirements, potentially affecting its ambitious development and implementation schedule. This is especially important given the acknowledged programmatic risk that there could be late changes in census scope.

49

GAO
Accountability * Integrity * Reliability

FDCA
Acquisition Management Capabilities

Risk Management
An effective risk management process identifies potential problems before they occur, so that risk-handling activities may be planned and invoked as needed across the life of the product and project in order to mitigate adverse impacts on achieving objectives. Key activities include identifying and analyzing risks, assigning resources, developing risk mitigation plans and milestones for key mitigation deliverables, briefing senior-level managers on high-priority risks, and tracking risks to closure.

The project office has
- developed a draft risk management process and
- identified a number of high-level risks for the FDCA project, including:
  - an ambitious schedule
  - late changes in project scope
  - maturity of FDCA contract management
  - system design faults
  - GPS signal not available
  - continuity of funding

To manage selected schedule and technical risks, the project office has
- adopted an approach calling for pre-award prototype development to address widely acknowledged schedule and technical risks,
- incorporated an assessment of risk in its evaluation of vendor proposals, evaluated vendors' approaches to risk management in their responses to scenarios provided by the FDCA project team, and
- briefed senior management on these risks.

50

GAO
Accountability * Integrity * Reliability

FDCA
Acquisition Management Capabilities

Risk management (continued)

However, the team has not yet implemented its risk management process. Specifically, the project team has not yet

- revisited or analyzed the identified risks,
- begun prioritizing and tracking project risks,
- assigned resources to manage risks, or
- documented risk mitigation plans.

Bureau officials reiterated that they have managed FDCA risks throughout the pre-award process and plan to continue to do so after the contract is awarded, though not in the more formal manner outlined in our study of best practices.

While we acknowledge that the program office continues to work to address key risks, ad hoc risk management activities are not a substitute for a more formal process where risks are routinely identified, prioritized, and mitigated. Until the project team implements an effective risk management process, it will lack a mechanism to address known and unknown problems. Without such a process, potential problems are more likely to become actual problems and have adverse effects on objectives—including FDCA cost, schedule, and performance.

51

GAO
Accountability * Integrity * Reliability

FDCA
Acquisition Management Capabilities

Contract Tracking and Oversight/Project Monitoring and Control
These processes provide oversight of the contractor's and the project office's performance, in order to allow appropriate corrective actions if actual performance deviates significantly from the plan. Key activities in tracking both the contractor's and the project office's performance include the selection of performance measures, communicating status, taking corrective actions, and determining progress.

The project team has

- incorporated requirements in the RFP for earned value management and other status reporting by the contractor,
- hired staff with contract surveillance experience,
- provided training on contract surveillance to selected project staff, and
- planned to oversee the contractor using checklists, reports, site visits, vendor deficit tracking, and risk assessment.

However, the project team has not yet

- developed detailed procedures and metrics for contract monitoring, or
- developed a full set of performance measures for internal project office performance, or begun tracking this performance.

52

GAO
Accountability * Integrity * Reliability

FDCA
Acquisition Management Capabilities

Contract tracking and oversight/project monitoring and control (continued)

Project officials acknowledged the need for additional planning for these processes and activities, but do not plan to fully implement many aspects of these processes until after contract award. In commenting on a draft of this briefing, bureau officials stated that there would be little value in establishing metrics in advance of having a FDCA solution and that they plan to work with the winning vendor to establish meaningful metrics. Officials also stated that they have already begun tracking internal office performance and noted that they have already submitted earned value management metrics for the program office to the Department of Commerce.

Given the importance of monitoring program office and contractor performance, best practices show that it is not too soon to begin identifying performance measures and developing a process for monitoring and managing both the program office and contractor's performance. Further, earned value management metrics are valuable, but do not comprise a comprehensive set of metrics for monitoring a program. The program office may identify and track other performance measures, including metrics for changes in risks and requirements. Moving forward, it will be important for the project team to establish strong project monitoring and control over internal performance as well as solid processes for tracking and overseeing the FDCA contractor's progress. Until it does so, the project faces increased risk of delays in identifying problems and taking appropriate corrective actions.

53

GAO
Accountability * Integrity * Reliability

FDCA
Acquisition Management Capabilities

Process and Product Quality Assurance
This process area provides staff and management with objective insight into processes and associated work products. This includes the objective evaluation of project processes and products against approved descriptions and standards. Key activities include developing a quality assurance plan, assigning resources to quality assurance activities, and implementing quality assurance activities. Through quality assurance, the project team is able to identify and document noncompliance issues and provide appropriate feedback to project staff.

The project team has

- drafted plans for quality assurance, contract surveillance, and award fee determination that call for inspections, random sampling, periodic surveillance, customer feedback, and monitoring
- provided selected staff with training on quality assurance and surveillance planning,
- begun planning to prepare staff for their roles in quality assurance,
- assigned a quality assurance manager, and
- developed plans for a principal technical monitor and 12-15 technical monitors to evaluate contractor work products and processes.

The project team plans to implement these quality assurance practices after contract award.

54

GAO
Accountability * Integrity * Reliability

FDCA
Acquisition Management Capabilities

Executive Oversight and Governance
The Office of Management and Budget and GAO guidance call for agencies to establish IT investment management boards comprised of key executives to regularly track the progress of major systems acquisitions. These boards should have documented policies and procedures for management oversight of IT projects and systems, and should be able to adequately oversee the project's progress toward cost and schedule milestones and their risks. The board should also employ early warning systems that enable it to take corrective actions at the first sign of cost, schedule, and performance slippages.

The FDCA project received executive-level oversight during early project planning.

- The project was presented to key executives from the Department of Commerce's IT Review Board and the Census Information Technology Governing Board.
- The project manager participated in meetings with Commerce and Census Bureau executives.
- The project reported to a FDCA steering committee comprised of executives from key bureau directorates.
- The project team worked closely with senior acquisition officials to develop acquisition planning and solicitation documents.

55

FDCA
Acquisition Management Capabilities

Executive-level oversight of FDCA is expected to continue:

- the FDCA Program Office is expected to report weekly on the status of the FDCA project to Decennial Management Division officials,
- the FDCA Program Office is expected to participate in quarterly reviews with the Commerce Information Technology Review Board and bureau managers, and
- Commerce and Census executive-level IT governing boards expect to review the FDCA project as part of its annual budgetary planning, under the 2010 Testing, Evaluation, and System Design program.

As previously noted, we reported in June 2005 on weaknesses in the bureau's executive oversight of IT projects. Specifically, we reported that, because the bureau did not have written procedures on how executive oversight was to be performed, it had less assurance that investment oversight and decision making was performed in a consistent and reasonable manner. Without clear, documented, and consistent governance procedures, the bureau cannot ensure that it is effectively and consistently overseeing these investments.

56

GAO
Accountability * Integrity * Reliability

FDCA
Conclusions and Recommendations

While the FDCA project team has initiated important steps in establishing a capable project management office, it has not yet completed important activities it needs to adequately manage this acquisition. For example, the bureau has not yet implemented needed processes for managing risks or measuring project performance. Without these processes in place, the bureau remains at increased risk of not developing and delivering FDCA on time and within budget. The project may also be at risk of falling short of promised functionality. Given the immovable deadline for performing the decennial census, the bureau faces greater risk of cost overruns or limited system functionality.

To ensure that the bureau adequately manages the FDCA project, we recommend that the FDCA program office take the following four actions:

- obtain stakeholder commitment to a project plan that includes estimated project costs and schedules, including deliverables and milestones,
- obtain validation and approval of baseline requirements,
- identify, prioritize, and assign responsibilities for risks, and develop and implement risk mitigation plans and actions, and
- develop internal and contractor performance measures and prepare to track project cost, schedule, and performance.

57

Agency Comments and Our Evaluation

In providing oral and email comments on a draft of this briefing, Census Bureau officials, including the Associate Director for the Decennial Census and the Assistant Director for Decennial Information Technology and Geographic Systems, generally agreed with our recommendations and stated that time constraints and budgets have driven the bureau to proceed with its acquisitions before all of the recommended activities have been completed. Officials stated that they plan to complete these activities as soon as possible.

Bureau officials also stated that they intend to rely on the DRIS and FDCA contractors to help refine requirements, project plans, and performance measures. However, our experience in reviewing major system acquisitions over the last several years has shown that it is important for the government to exercise strong leadership in managing requirements, plans, and measures.

Bureau officials also offered technical corrections which we have incorporated as appropriate.

58

Appendix II: Objectives, Scope, and Methodology

For both the Decennial Response Integration System and Field Data Collection Automation program acquisitions, our objectives were to (1) provide an overview, status, and plans (including costs, schedule, and deliverables) and (2) determine if the bureau has capabilities in place to successfully manage and oversee the acquisitions.

To provide each project's overview, status, and plans, we analyzed current project documents, including plans, acquisition documents, and deliverables; we also interviewed project officials.

To determine if the bureau had capabilities in place to successfully manage and oversee the acquisitions, we identified sound IT systems acquisition and management processes from industry standards, including those developed by the Software Engineering Institute, and compared them to the Census Bureau's practices for the selected acquisitions. We evaluated the following processes:

- project and acquisition planning;
- solicitation;
- requirements development and management;
- risk management;
- contract tracking and oversight/project monitoring and control;
- process and product quality assurance; and
- executive oversight and governance.

In each of the process areas listed above, we evaluated project documentation and interviewed project officials to determine the status of the bureau's efforts. We obtained comments from bureau officials, including the Associate Director for the Decennial Census and the Assistant Director for Decennial Information Technology and Geographic Systems, on a draft of the briefing in attachment I. We conducted our review between July 2005 and January 2006 at Census Bureau headquarters in Suitland, Maryland, in accordance with generally accepted government auditing standards.

GAO's Mission

The Government Accountability Office, the audit, evaluation and investigative arm of Congress, exists to support Congress in meeting its constitutional responsibilities and to help improve the performance and accountability of the federal government for the American people. GAO examines the use of public funds; evaluates federal programs and policies; and provides analyses, recommendations, and other assistance to help Congress make informed oversight, policy, and funding decisions. GAO's commitment to good government is reflected in its core values of accountability, integrity, and reliability.

Obtaining Copies of GAO Reports and Testimony

The fastest and easiest way to obtain copies of GAO documents at no cost is through GAO's Web site (www.gao.gov). Each weekday, GAO posts newly released reports, testimony, and correspondence on its Web site. To have GAO e-mail you a list of newly posted products every afternoon, go to www.gao.gov and select "Subscribe to Updates."

Order by Mail or Phone

The first copy of each printed report is free. Additional copies are $2 each. A check or money order should be made out to the Superintendent of Documents. GAO also accepts VISA and Mastercard. Orders for 100 or more copies mailed to a single address are discounted 25 percent. Orders should be sent to:

U.S. Government Accountability Office
441 G Street NW, Room LM
Washington, D.C. 20548

To order by Phone: Voice: (202) 512-6000
TDD: (202) 512-2537
Fax: (202) 512-6061

To Report Fraud, Waste, and Abuse in Federal Programs

Contact:

Web site: www.gao.gov/fraudnet/fraudnet.htm
E-mail: fraudnet@gao.gov
Automated answering system: (800) 424-5454 or (202) 512-7470

Congressional Relations

Gloria Jarmon, Managing Director, JarmonG@gao.gov (202) 512-4400
U.S. Government Accountability Office, 441 G Street NW, Room 7125
Washington, D.C. 20548

Public Affairs

Paul Anderson, Managing Director, AndersonP1@gao.gov (202) 512-4800
U.S. Government Accountability Office, 441 G Street NW, Room 7149
Washington, D.C. 20548

PRINTED ON RECYCLED PAPER

Mr. TURNER. Thank you. I want to recognize that we have been joined by Carolyn Maloney from New York. Thank you for being here today.

Mrs. MALONEY. Nice to see you. I would ask permission to place my opening comments in the record?

Mr. TURNER. Without objection.

[The prepared statement of Hon. Carolyn B. Maloney follows:]

Statement of Representative Carolyn B. Maloney (NY-14)
"Apportionment in the Balance: A Look into the Progress of the 2010 Decennial Census"
March 1, 2006

Thank you, Mr. Chairman, for calling this hearing on the 2010 census. I would like to welcome our guests, especially Dr. Margo Anderson who is the foremost historian on the census. Her book *The American Census: A Social History* is the authoritative source on the social and political history of the census, and it served this committee well in understanding the complex problems raised by the 1990 and 2000 censuses. Similarly, her book *Who Counts* written with Dr. Stephen Fienberg is the best single source for understanding the statistical controversy that has embroiled the census for over 30 years.

Mr. Chairman, the census is not rocket science. In fact, it is not science at all. The census in the 21st census is a management challenge. How do you manage over 500 local offices and nearly a million employees to complete a task that must be done in nine months, and that must be done with as few errors as possible? The logistics of preparing for and executing the many operations that are required to conduct a census are perhaps the most complicated faced by any federal bureaucracy. However, it is not science.

The science of the census comes in understanding how well the census has been conducted. Was the list of addresses accurate? How many people were missed? How many people were counted more than once? How many people were counted in the wrong place? These are the census issues that require top-flight science as well as skilled and experienced statisticians.

By nearly all accounts, the 2000 census was a management success. The cogs and wheels of the census ran smoothly. Tasks were completed on time and within budget.

The science of the 2000 census was a complete failure. When the reapportionment numbers were announced in December of 2000, the Census Bureau had three population counts for the United States, and it could not tell Congress and the public which was the right number. Over the next two years, the Census Bureau piled tons of paper on the problem, but produced little useful information.

The Census Bureau has repeatedly claimed that the 2000 census was the most accurate census ever conducted. That is simply not true. Unfortunately, the Census Bureau's final report on the accuracy of the 2000 census is riddled with contradictions, conundrums, and statistical slights of hand. It does not answer the basic questions that describe the accuracy of the census. What was the total number of people missed and counted twice in the census? What proportion of the people missed in the census was missed in households that were counted, and what proportion was missed because the whole household was missed?

Today the Census Bureau Director is going to tell us what Boeing is going to do for the 2010 census, and what Lockheed Martin will do, and what the Harris Corporation will do. That is fine. It is useful to know how the private sector will conduct the 2010 census. What we want to know is what is the Census Bureau going to do.

The Census Bureau was once touted as a world-class scientific agency working on the cutting edge of statistical problems. We want to know what the Census Bureau is going to do to measure the accuracy of the 2010 census. That is the scientific problem that Congress cares about. How will the Census Bureau measure the accuracy of the address list; count the number of people missed and counted twice. When will we know those answers? Will we know when the reapportionment numbers are released that they are accurate? Will we have measures of the accuracy of the block level numbers that are released for redistricting?

A repeat of 2000 is unacceptable. Congress should not have to wait three years to find out how accurate the census is, and then be presented with an abstract impression.

Last year, at our one hearing on the 2010 census, I asked the Director for the plans for measuring census accuracy. He didn't have them with him, and it took over two months for the Census Bureau to prepare those plans and deliver them to us. Having expressed that interest at this hearing last year, I am disappointed that the Director's testimony does not even mention how accuracy will be measured or when Congress will be informed about the accuracy of the 2010 census. I can only hope that the error of omission will be corrected in his oral statement.

Thank you.

Mr. TURNER. Recognizing that we have an 11 o'clock address by the Prime Minister of the Republic of Italy, we are going to try to conclude our questions to panel one within that time period, which you have been very precise within the timeframe of your oral remarks, and I appreciate that, giving us what should be ample time to ask questions.

I would like to start with Director Kincannon. Does the Bureau have any plans to adjust the 2010 census count? This includes working with any outside nongovernment entities to plan for adjustment.

Mr. KINCANNON. No, Mr. Chairman, we do not have plans to address the census results. We spent more than 3 years working on what we thought was a well-designed system to provide improvements to the quality of the count. But at the end of that more than 3-year period of our best experts working on it, our conclusion was that it was not possible with the technology and means at our disposal to adjust the census for the main products of the census which required block-level statistics and place statistics. We simply cannot do that. So we are not planning on doing that, sir.

We do plan to measure coverage for purposes of continuing to assess and improve the techniques we use in the census, however.

Mr. TURNER. Director Kincannon, I believe that in your written testimony you did not talk about the power of the Internet and its assistance it can provide in the 2010 census. Many response-driven organizations have gone the way of the Internet as a way of collecting their data. Certainly other panel members have referenced the Internet.

Will you share with us how the census will be harnessing the Internet to allow people to respond to their census questionnaire?

Mr. KINCANNON. Well, I am aware that the Congress has much optimism about the Internet as a way of reducing the cost of many Government activities, and sometimes that has worked. Our experience with household surveys and with census tests has been that it is not something that increases response or improves the quality of the data that we get.

We tested this in the 2003 national census test. There was no difference in the response rate in the panel that had no option to respond by the Internet from the one that had the option to respond by the Internet. About 10 percent of the responses in the Internet test panel came from the Internet, but it did not increase response at all.

Furthermore, the concerns about the complexity of dealing with the Internet make me very cautious in how much we would depend on that. The well-documented effort that phishing and spamming on the IRS Web site are a caution to me. I nearly fell victim to that myself, and I can see how a person who tries to respond to the census might well be duped into providing information that would lead to identity theft on the Internet. And if it does not increase our efficiency or effectiveness, increase our response rates, or measurably reduce our costs, then the cost of protecting against that is probably not warranted.

We continue to explore and we contemplate having an option for Internet response, but I do not see it as a main component of what we will do.

Mr. TURNER. Ms. Farrell or Mr. Powner, would you like to respond to that, on the prospects of the Internet use?

Mr. POWNER. If I could, I think it is great that we acknowledge the security considerations with using the Internet for this next census, although some of the Bureau's internal documentation claim that up to a quarter of the respondents could, in fact, use the Internet to respond to this upcoming census.

I think what is key is if you look in particular at one of the key acquisitions, which is the response system, which the contract was already let in October. You have a contractor that is working toward integrating Internet, phone, and paper forms, and it is very important that, although I see where the Director is coming from in terms of it may be lower than that quarter of the respondents, it is very important that we be prepared from a systems perspective to respond to a higher number of Internet responses and that the systems have the capability and the contractors are well prepared to integrate those Internet responses.

Mr. TURNER. There have been some concerns about the handhelds and if they should fail in 2008 or 2010. Mr. Powner, are you comfortable, or Ms. Farrell, with the Bureau's contingency planning with respect to the handhelds if they should not perform?

Ms. FARRELL. The handheld computing devices are a key part of the design for the 2010 census, and to date, for the 2006 and 2008 dress rehearsal, we are not aware of any backup plans in the event that there are widespread problems with these devices. If they fail, it will cause serious operational challenges for the Bureau to back these up with paper questionnaires or whatever else will be necessary for the verification for address canvassing.

Mr. POWNER. Mr. Chairman, if I can expand on Ms. Farrell's response, if you look at the FDCA contract, which is to be awarded some time this spring—and handheld is a part of that contract—it is very important to address the problems that have been identified to date that the Census Bureau specifies performance requirements. We have had serious performance issues with the handhelds to date, so understanding what the availability of those handhelds should be, what the response time is, what our peak loads are, that clearly needs to be specified in these contracts so that we could hold contractors accountable for those specific requirements. That ties to one of our management activities where you look at the requirements management area.

Mr. TURNER. Director Kincannon, would you like to respond?

Mr. KINCANNON. Yes, I would be happy to. The handhelds that we have tested in the field to date have been ones developed at the Census Bureau, and they have confirmed our opinion of a couple of years ago that we were not able to develop a device that would meet all the requirements for the dress rehearsal or the census ultimately. We simply do not have those technological capabilities.

We advanced in the process of procuring those services, and I am happy to say that all of those companies who have sought to submit a bid have submitted devices, prototype devices, that exceed what we were able to do and that appear that they can fully meet the functional requirements, including security, ease of use, and communications, both wireless and landline. So we are confident

that they will be able to meet the requirements that we have set out.

Mr. TURNER. So if I could rephrase the question, my understanding of your answer, are you saying that you trust them enough that you don't believe that there is a contingency plan that is necessary or your contingency planning has not been completed as you are looking to trying to nail down the greatest efficiency of these units?

Mr. KINCANNON. Well, it is the latter, Mr. Chairman. We do have contingency planning, and we are concerned about that. But we are now at this stage of things much less concerned than we were a year ago about widespread failures. We will know that more when the contract is awarded, I believe as GAO indicated, they will be closely involved in understanding the capabilities offered and in monitoring the testing of those capabilities.

Mr. TURNER. Mr. Clay.

Mr. CLAY. Thank you, Mr. Chairman.

Director Kincannon, can you tell me what will be done to test the Local Update of Census Addresses in the 2006 census test? Also, can you update us with an outline of Bureau plans on what it will do to help local governments prepare for the address correction program through the Local Update of Census Addresses program?

Mr. KINCANNON. Yes, Congressman. We did use the LUCA process in preparation for the 2006 test, and we evaluated any problems that we identified in that. We did not consider it a test per se because we have had a well-working LUCA process. We have already begun rolling out the steps for conducting LUCA for the dress rehearsal, and we will continue to fine-tune that. But it has proved a very useful process in 2000 and in the test censuses for ensuring that we do not miss neighborhoods and that we have the best local information incorporated in what we plan to do.

Mr. CLAY. Can you tell me about how you reach out to local governments and assist them or work with them?

Mr. KINCANNON. On LUCA?

Mr. CLAY. Yes.

Mr. KINCANNON. Yes, sir. Well, we offer an array of options. There are different degrees and sophistication of local governments according to their scale and other factors, and we offer a variety of options that they can choose within the LUCA depending on what they think is their best way of checking those addresses. We give them information in advance of LUCA about what materials will be provided and how they might use them, and, you know, so we work with them in that way.

Mr. CLAY. There have been many individuals forced to leave the Gulf Coast after the hurricanes last fall. What efforts are underway to account for those who have left areas affected and include them in the 2010 census? Will there be a measure to determine if these individuals have left permanently or only on a temporary basis? Have you all addressed that at Census and figured how you are going to count these individuals?

Mr. KINCANNON. Yes, Mr. Clay, we had procedures that have been used in the past for persons displaced in hurricanes in the census year. Hurricane Floyd hit North Carolina pretty hard in 1999. A lot of people were displaced. For census 2000 we had procedures that we made sure we contacted both former residences or

sites that may have been temporarily or permanently abandoned and people living in various shelters. We counted them where they said they intended to be. That was identified their usual place of residence.

We are farther away, and let us hope that with the best human efforts and God's aid that the people displaced have settled in a permanent way either in their former homes or in new homes by 2010. But we do have procedures; they are arduous, and they cost extra money. But we have procedures that work with persons who are displaced.

Mr. CLAY. I am concerned about provisions in the President's budget that would lead to the elimination of the Survey of Income and Program Participation [SIPP], as you call it. SIPP is the only large-scale survey explicitly designed to analyze the impact of a wide variety of Government programs on the well-being of some of America's poorest families. What justification can you offer us for the elimination of the SIPP program?

Mr. KINCANNON. Well, first let me give the context. We operate, as always, in a setting of constrained resources. The Congress does not give us all the money that we ask for. Sometimes the policies that we follow in the executive branch mean that we are accorded lower priorities than some other things. That is not surprising. We know that.

In the formulation of the budget for 2007, we did not have room within our allowance for all the things that we had done and wanted to do. Then we followed what is our practice and what is mandated by Congress over the last several years, which is to look at all our programs, do the things that are of highest priority, deal differently with things that are of lowest priority or troubled by quality and so on.

When we assessed this within the Census Bureau, we realized that the SIPP program is rather mature; more than 20 years it has been in place. It has been useful. It has some chronic problems that we either have not been able to solve or have not been resourced sufficiently to solve, and that has troubled us.

So what we are looking for is in a world that has changed over 20 years, with new methods, much more successful means of using administrative records from programs intended to assist those in poverty or with other kinds of difficulties, and with the successful appearance of the American Community Survey providing yet another source of data on the condition of families, that we want to put together a new program, a re-engineered program that will continue to meet the needs of Federal agencies for longitudinal studies of income dynamics. This includes the HHS Assistant Secretary for Planning and Evaluation, the Food and Nutrition Service in Agriculture, the Administration on Children and Families, the Social Security Administration, and other agencies that have as their responsibility meeting the needs of people who may be disadvantaged or at risk.

So we want to re-engineer what we are doing, take recognition and build on the new sources of data that we have, and find a way to continue to meet those needs within the resource constraints we have.

Mr. CLAY. Just out of curiosity, what were some of the difficulties in gathering the data?

Mr. KINCANNON. The SIPP is a very complex survey deigned to produce both cross-sectional and longitudinal data, and the need for longitudinal data means that you have to continue interviewing the same household over a period of a couple of years, actually.

Mr. CLAY. Four years.

Mr. KINCANNON. You are better informed than I am. Your briefing notes are better than mine.

Mr. CLAY. I am a speed reader. [Laughter.]

Mr. KINCANNON. Well, I am being too long-winded if I am giving you a chance to read all that.

It is very difficult, we have found, and increasingly difficult to keep up the response of families, follow them when they move, and so on over that 4-year period of time, so that there is severe attrition. And we need to find some way differently to address that.

Mr. CLAY. And you think you will come up with a more efficient manner or condense the way you take the survey?

Mr. KINCANNON. Well, we think that we can come up with a better model of using tools now available to us, both from survey results in the ACS and CPS and our gained experience in modeling and improved access and capability with regard to administrative records, and providing something that will help these agencies meet their responsibilities.

Mr. CLAY. I thank you for your response. I appreciate it.

Mr. KINCANNON. Thank you.

Mr. TURNER. Ms. Foxx.

Ms. FOXX. I would like to followup on the question about what do you do about people who have been displaced by something like Katrina. One thing I am concerned about is it seems to me that if people have been away from the home for 5 years, what does that do to distort the numbers? But I would like to know something about the cost of that. You said it is much more expensive. And who is making the decision on the cost/benefit analysis of that program versus another program where we might be able to gather better data? I am very interested in that.

Mr. KINCANNON. Well, I can talk a little bit more along those lines and would be very happy to followup with a special briefing with more details, both about what we did in Hurricane Floyd and about what we have done subsequently with Katrina victims.

We have, for example, in our current surveys, we continued in the areas affected by Katrina and Rita and Wilma to keep up good response rates, so we know how to find people when they have moved and we have ways that are very successful in doing that.

In the American Community Survey, we have added some instructions—we did not change the questionnaire—to make sure that people who were evacuated and staying in other people's homes do get identified and surveyed so that we can then tell from the questions already on the survey something about their condition and in some limited circumstances about where they were before.

We plan to use those data to produce information on the characteristics of affected areas for the 8 months of 2005 before Katrina

struck and for the 4 months after. This should be of some use both to Federal and local officials in assessing the condition.

We worked with the Bureau of Labor Statistics to identify in a similar way in the Current Population Survey people who had been evacuated, and the Labor Department was then able to assess differential rates of unemployment for people who were settled differently.

The CPS is limited in sample size, and so it does not give for that small a universe of people information below the national level. The American Community Survey will be able to give more information at smaller levels.

Both of them are limited in that the Current Population Survey does not address people who live in group quarters. They are not handled in the labor force survey traditionally. The American Community Survey began covering group quarters only when funding was provided for fiscal year 2006, so it will not be able to tell us much about people who were in shelters and such like, but if they are living in trailers, FEMA trailers and so on, yes, we will get information about them.

Ms. FOXX. Thank you.

Mr. TURNER. Mrs. Maloney.

Mrs. MALONEY. I want to thank the chairman and ranking member for calling this, and I would like to direct my questions to Mr. Kincannon. But I would first like to ask Ms. Brenda Farrell—and it is a followup of correspondence I have had with the GAO—to get back to me in writing. Does the GAO have the technical expertise to evaluate the Census Bureau's techniques for measuring the accuracy of the 2010 census? If not, when do you expect to have that expertise? This is a followup of letters that I have sent to GAO requesting this analysis. They say they are not capable of doing it. If you could get back to me on what exactly—what hurdles they need to go through so that they can have the technical expertise to evaluate the accuracy of the 2010 census. I would get it to you in writing, but I really want to get to Mr. Kincannon because we have been called to a meeting right now, a very important one. We have a foreign head of state who will be addressing a joint session of Congress.

I would like a yes or no answer. Without SIPP, we will not be able to adequately study many policy issues such as the long-term effects of welfare reform or the effects of recent budget cuts and program changes. Is the Census Bureau concerned about helping Congress on both sides of the aisle evaluate public policy? Yes or no.

Mr. KINCANNON. Yes.

Mrs. MALONEY. OK. Then going back to the question that was raised by Ranking Member Clay about the decision to really stop the SIPP program because of budget constraints, there is no guarantee that in the future the budget constraints will not be worse. And many Members of Congress and really the scientific community—the research community is very concerned about the elimination of the SIPP program and recognizes that the Census will not be able to replace such a unique and important survey with one costing less. The SIPP took over 7 years to develop, as did the American Community Survey, as you pointed out, and Congress as

well as private foundations, research institutes, have invested millions in understanding and processing the data.

My question is: Is there any other place that researchers can get comparable information on program participation and income on a sub-annual basis? And I again would like this answer in writing because the research community is telling me and the scientific community is telling me that there is not comparable information. And I feel that this is very important. We need to know what is happening in the country. We need to know what is happening with our populations in certain areas, and the SIPP provided valuable information.

I know you mentioned American Community Survey and a lot of other surveys when you responded to Mr. Clay, but the research community is telling my office and me personally that this will not give the same information. And so I would like it in writing, the answer to this question, because I think this is so serious that we should really look at it in depth.

I would like to note that Ranking Member Clay and I, along with Members on both sides of the aisle, have sent a letter to the President—we are sending one to have this money reinstated to the budget, because we believe this research is very important.

Would you like to elaborate? Is there one that gives you the exact comparable information on program participation and income on a sub-annual basis?

Mr. KINCANNON. The dimension that is missing in existing other surveys than SIPP—that is, the CPS and the ACS—is the longitudinal dimension. We have to find a way to craft that element using data from those surveys, but probably with follow-on surveys or independent surveys, and using administrative records from the programs affected.

We cannot describe now in detail exactly how that will be done. We will work on that with the Federal agencies that have quite important needs, with the Congress, which has important needs and we understand that. We are the servant of the Congress in this regard. My "yes" was not an idle yes. And we will work with the research community.

Whether we can replicate every topical nuance of the SIPP is another question, but we can find a way to substitute for the longitudinal element with a new longitudinal element, and that is quite important to do.

I would also like to say——

Mrs. MALONEY. Before we abolish it, I would like to see in place what it is you are going to put out there, because the longitudinal is very, very important to understand where we are, where we are going, where we have been in the past. And I just put that out there for the scientific community.

I would like to followup that the Census Bureau has released at least two memos discussing why they are discontinuing the SIPP. In both cases, the memo states that the reason for eliminating the SIPP have to do with the lateness of the data and the problems with attrition and nonresponse.

This memo does not acknowledge that the SIPP's nonresponse rate is the same as the Current Population Survey, yet there is no talk about getting rid of that, which is also conducted by the Cen-

sus Bureau for the Bureau of Labor Statistics, and that compared to the two other national longitudinal surveys, attrition is lower than the panel study of income dynamics and about the same as the National Longitudinal Study of Youth.

Furthermore, data for 2004 was released prior to data from the March Current Population Survey, so it appears Census has worked hard to get the data out quickly. If these reasons for eliminating the SIPP are invalid, is the reason SIPP is being cut purely due to budget constraints rather than research needs or substantive issues with the data?

Mr. KINCANNON. No, it is not solely for budget constraints. It does stem from longstanding concerns about the robustness of SIPP.

The Census Bureau field staff is extremely capable. They get a higher response rate than almost anybody else working to collect data, and I am proud of that. But, still, the attrition in SIPP is a serious problem. Attrition is a characteristic problem of longitudinal surveys, but it has, in our view, become more serious here. Our choice in a constrained resource environment was to cut everything in a kind of an unmanagerial, mindless sense, reducing everything equally, or to apply priorities, as the Congress instructed us to do.

That is why after 2 or 3 years of asking Congress for funds to cover 20 percent of the economic activity in this country between economic censuses we finally stopped asking for that. We have not stopped asking for money for longitudinal data on income dynamics. We expect to ask for a program of a substantial level to continue doing that, and we just have to accommodate the realities of weaknesses in SIPP and what we will have in resources.

Certainly, in terms of priorities, we rank the censuses above others. The population and housing census and all the components, including the ACS, the economic censuses—these are fundamental. The economic censuses are the only time, twice a decade, when we measure almost all the economic activity in the country. The other years, we are making policy, the ES calculating GDP and so forth, missing 20 percent of the economic activity in the country, and it is the part in the service sector where jobs are being created much more than in other sectors of the economy.

We have to make our best set of priorities within the constraints placed on us by the Congress, among others.

Mrs. MALONEY. But you stated that attrition and——

Mr. TURNER. Mrs. Maloney, I hate to interrupt, but the House and Senate will convene shortly in a joint meeting to receive the Prime Minister of the Republic of Italy. Because House rules do not allow committees to meet during a joint meeting of Congress and out of respect for the Prime Minister, the subcommittee will be recessing, subject to the call of the Chair. If you are unable——

Mrs. MALONEY. Mr. Chairman.

Mr. TURNER. I was just going to say, if you were unable——

Mrs. MALONEY. Point of personal privilege? May I make a request?

Mr. TURNER. I was just going to suggest——

Mrs. MALONEY. OK.

Mr. TURNER. I would just say if you are not able to—and we are going to let this panel go, if it is OK with you. Perhaps if you could take the next 2 minutes and ask your questions for the record to which they could respond.

Mrs. MALONEY. OK. Thank you very much, and I will get them in writing.

Again, last year, we asked for specific information on the plans for measuring the accuracy of the 2010 census. After a long delay, I got a document that did not provide very much information. Please provide the committee, respectfully, with specific milestones and deadlines for decisions on how you will measure the accuracy, when the operational procedures for that measurement will take place, and when you will report to Congress on the accuracy of the 2010 census.

Also, the Census Bureau is including a question on ancestry on the 2010 census. Consequently, the Census Bureau will be in a position to provide agencies like the Department of Homeland Security with counts on the number of Greek Americans, Indian Americans, Arab Americans, Irish Americans on a block-by-block basis. What is the Census Bureau's policy on providing this kind of block-level information to law enforcement agencies?

Again, I thank you for your very difficult job. We rely on the statistics that you give us. I am particularly disturbed by the pattern of the gap between the haves and the have-nots in our country. It is growing in a way that I believe people on both sides of the aisle are tremendously concerned. It is not good for the wealthiest people in our country. It is not good for the poorest people. And that SIPP program was the document that really gave the information of what was exactly happening with this gap, and I think that is important for policymakers because we certainly want our country to prosper, all of our citizens to prosper, and I think it is important to track it.

So I just want to underscore that I really do not want to see it eliminated unless you have in place something that really takes account for that data. And if you are going to eliminate it, I feel that there would be members on both sides of the aisle that would do a budget amendment that would restore specifically what was needed for that data, and if you could get us the specific costs, we could work on it.

Thank you very much.

Mr. TURNER. Thank you, Mrs. Maloney.

The subcommittee will now recess subject to the call of the Chair. The subcommittee will reconvene immediately after the joint meeting of Congress, and we will adjourn this panel and commence with panel two when we return.

Thank you.

[Recess.]

Ms. FOXX [presiding]. Thank you all for coming back after the brief recess we had.

It is the policy of this committee that all witnesses be sworn in before they testify, so I ask that the second panel of witnesses please rise and raise your right hands.

[Witnesses sworn.]

Ms. FOXX. Thank you. Let the record show that all witnesses responded in the affirmative.

Dr. Rector, we will begin with you.

STATEMENTS OF RALPH RECTOR, PH.D., SENIOR RESEARCH FELLOW AND PROJECT MANAGER, CENTER FOR DATA ANALYSIS, THE HERITAGE FOUNDATION; ANDREW REAMER, PH.D., DEPUTY DIRECTOR, URBAN MARKETS INITIATIVE, THE BROOKINGS INSTITUTION; AND MARGO ANDERSON, PH.D., PROFESSOR, HISTORY AND URBAN STUDIES, UNIVERSITY OF WISCONSIN-MILWAUKEE

STATEMENT OF RALPH RECTOR

Mr. RECTOR. Mr. Chairman and members of the subcommittee, thank you for inviting me to testify today. I am a senior research fellow and project manager in the Heritage Foundation's Center for Data Analysis. I participate in professional organizations that deal with Federal statistical issues. However, the testimony presented today reflects my own views, not necessarily those of the Heritage Foundation or any other organization.

Research within Heritage's Data Center focuses primarily on policy debates at the national level. As a result, I will limit my remarks to examples showing why census data are useful to researchers analyzing Federal policies. However, I want to begin by discussing the overall importance of producing an accurate and complete decennial census and for continuing the American Community Survey.

The constitutional Framers intended the decennial census to play a key role in ensuring the representative nature of the Federal Government. The Census Bureau relies on the MAF and TIGER programs to produce an accurate and complete census. As explained more fully in my written testimony, the need to coordinate MAF and TIGER programs raise serious issues. However, implementing the ACS can help in updating and verifying the systems that are used to collect decennial census data.

These benefits will only be realized if the ACS is adequately funded, and they will also only be realized if the Census Bureau works closely with governmental entities and other groups at the State and local level, and this is the reason why I think the program LUCA is so important.

In the remaining portion of my testimony, I summarize several reasons why census data are so useful to nongovernmental analysts who are studying national issues, and I illustrate these examples with research conducted at the Heritage Foundation. Nevertheless, I believe that these examples are typical of ways that many researchers, from a variety of political perspectives, use census data.

To begin, census data help localize national issues to regions that are meaningful for decisionmakers and ordinary citizens. Traditionally, census long form data have been the primary—if not the only—source of information for demographic and socioeconomic information for regions that interest policymakers and the public such as congressional districts and Zip codes.

Social Security critics, for example, highlighted the program's general low rate of return. CDA economists used congressional dis-

trict data produced by the census in combination with data from other sources to estimate Social Security's rate of return for retirees in each State and in each congressional district.

Census data are also important in evaluating the effectiveness of Federal grants. CBO has indicated that researchers should control for the independent effects when analyzing the outcome of Federal initiatives. For this reason, CDA analysts often use census data in their statistical evaluations of Federal programs.

Census data have also been used to analyze proposals that would change Federal policies. For example, to examine the potential for a Social Security reform plan intended to produce wealth for low and moderate-wage earners, CDA analysts wanted to create a representative demographic profile, a set of those, from a data base that was large enough to permit a very detailed set of classifications. Fortunately, the first national-level American Community Survey, micro-file, was available, and using this micro-file, CDA analysts developed up-to-date profiles that would otherwise not have been available.

Finally, the ongoing ACS will benefit smaller but more detailed special-purpose surveys administered by the Census Bureau, such as the current Population Survey, the Consumer Expenditure Survey, American Housing Survey, and the Survey of Income and Program Participation [SIPP]. Analysts and research organizations and universities routinely use these other census surveys to study issues such as welfare, education, and taxes.

These smaller household surveys are adjusted to be consistent with data from the Census Bureau's population estimates program. And the ACS provides a valuable source of information for updating these population estimates.

In conclusion, census data are the backbone of a constitutionally mandated apportionment process, and census data are also vital to information that analysts and policymakers at all levels uses.

Thank you.

[The prepared statement of Mr. Rector follows:]

Congressional Testimony

United States House of Representatives
Committee on Government Reform
Subcommittee on Federalism and the Census

March 1, 2006

Testimony on the *Apportionment in the Balance: A Look into the Progress of the 2010 Decennial Census*

By
Ralph Rector, Ph.D.
Senior Research Fellow and Project Manager
Center for Data Analysis
The Heritage Foundation
Washington, D.C. 20002

Mr. Chairman, Members of the Subcommittee, thank you for inviting me to testify on the *Apportionment in the Balance: A Look into the Progress of the 2010 Decennial Census*. I am a Senior Research Fellow and Project Manager in The Heritage Foundation's Center for Data Analysis (CDA). I help direct the work of researchers who routinely use a wide variety of data supplied by the Census Bureau and other federal statistical agencies. I also participate in organizations such as the Association of Public Data Users (APDU) and the Council of Professional Associations on Federal Statistics (COPAFS) that deal with federal statistical issues. However, the following testimony reflects my own views and not necessarily those of The Heritage Foundation or any other organization.

Research within The Heritage Foundation's CDA focuses primarily on policy debates at the national level. As a result, I will limit my remarks to examples showing why Census data are important to researchers analyzing federal policies. Before doing so, however, I want to briefly review the importance of producing an accurate and complete decennial census and continuing the American Community Survey (ACS).

The Constitutional framers intended the decennial census to play a key role in ensuring the representative nature of the federal government. This is because apportionment, a vital component of representative government, depends on Census-provided population counts. The United States Constitution was the first in world history to base political apportionment on a national periodic census. The inaugural Congress took the use of census data seriously, as evidenced by some of the first Congressional debates in 1791. Those debates dealt with the formula to be used in determining the number of representatives by state. Initial legislation on apportionment methods led to the first presidential veto by George Washington in 1792.[1] Ultimately, a formula was adopted and, beginning with the 1840 census, data were also used to create Congressional district boundaries in every state.[2]

Today, the Census Bureau relies on the Master Address File (MAF) and the Topologically Integrated Geographic Encoding and Referencing (TIGER) program to produce an accurate and complete Census. The quality of the Census depends on sufficient funding of these complex systems and on their successful operation both separately and as integrated entities.

But the need to coordinate MAF and TIGER raises serious issues. For example, what happens if an address in the MAF has not yet been assigned a geocode? Will it still be possible to collect and process responses from that address? Also, what checks are in place to ensure that the location of housing units, particularly those with multiple residents, are correctly identified even when the location is different from what a mailing address would indicate?

The ACS, which replaces the Census "long form" in 2010, can be used to help answer such questions and to reveal and resolve other potential problems. Data from the ACS are currently available for most metropolitan areas with populations of 250,000 or more, for all 50 states, for the District of Columbia, and for 203 congressional districts. In the next few years, ACS data will also be available for every county in the U.S. Within five years, ACS data will be available for communities with populations below 20,000. The release of annual ACS-based information for so many different geographic areas will assist local policymakers and data users. Implementing the ACS can also help at the federal level in updating and verifying the systems used to collect decennial census data?

However, these benefits will only be realized if the ACS is adequately funded. They will also only be realized if the Census Bureau works closely with government entities (and other groups) at the state and local level. Census Bureau officials recognize that the reliability of their systems depends on a partnership with local agencies. This is the reason that programs like the Local Update of Census Addresses (LUCA) are vital. For example, local officials may know about areas of new construction before such information is available to Census from the United States Postal Service. In addition, local agencies can supplement information that is based solely on address lists.

A valid address list is critical to the successful implementation of the Census. However, at a human level, the Census is more than a form sent to an address. It is a housing-based survey. In some cases, living arrangements within housing units change from the time addresses were originally assigned. In other cases, several housing units may share the same address, and mail may be distributed using an internal sorting system. Local officials who know about such situations should be communicating with the Census. In addition, the Census Bureau should give local officials advance notice about what information would be beneficial and provide clear instructions about how to make that information available. Advance notice is especially important because it helps local agencies plan ahead and allows them to build the necessary resources into their budgets.

Statistical data provided by the Census Bureau benefit data users at the local, regional, and national levels. I believe it is particularly important that policymakers recognize the value of Census data to nongovernmental analysts who are studying national issues. In the remaining portion of my testimony, I summarize some of the reasons why Census data are so important. I illustrate those reasons with examples of research conducted by analysts in The Heritage Foundation's Center for Data Analysis. The specific research questions, methodologies, and conclusions of these projects are not intended to fully represent the scope of analysis done by policy researchers outside the government. Nevertheless, I think they are typical of ways that many analysts from a variety of political perspectives use Census data.

To begin, Census data help localize national issues to regions that are meaningful for decision makers and ordinary citizens. Traditionally, Census long form data have been the primary—if not the only—source of information about the demographic and socioeconomic characteristics of regions that interest policymakers and the public such as Congressional districts and zip codes. As a result, analysts can use Census data to help make the effects of existing federal programs more understandable.

For example, advocates of Social Security reform have highlighted the low rate of return that many retirees receive after years of paying into the retirement system. CDA economists used Congressional district data produced by the Census in combination with data from other sources to estimate Social Security's rate of return for retirees in each state and Congressional district.[3] In addition, CDA analysts recently combined Census data reported by zip code with data from the Department of Defense to compare the demographic characteristics of the localities from which military recruits were drawn before and after the September 11 terrorist attacks on the World Trade Center and the Pentagon.[4]

Census data are also important in statistical evaluations of the effectiveness of federal grants. These data help researchers take into account factors that are not directly related to federal programs but can independently influence policy outcomes. The Congressional Budget Office (CBO) emphasized the need to take such data into account when evaluating federal programs such as law enforcement grants. CBO states that "reductions in crime may have as much to do with demographic changes and the strength of the economy as with the efforts of a federal crime-prevention program."[5] In other words, researchers should control for independent effects when analyzing the outcome of federal initiatives. For this reason, CDA analysts often use Census data in their statistical evaluations of federal programs.[6] The American Community Survey, by making more local data available on a more frequent basis, will provide additional opportunities for conducting such policy evaluations.

Census data can also be used to analyze proposed changes to federal policies. For example, to examine the potential for a hypothetical Social Security reform plan to produce wealth for low-and-moderate wage earners, CDA Analysts wanted to create representative demographic profiles using a database with a sample large enough to permit very detailed classifications.[7] They chose to use the first release of the national-level ACS micro-file. This file contains information on the characteristics of housing units and residents, but with all identifying information removed. In contrast to the standard summary tables, which give only cross tabulations based on predefined

classifications, micro-files allow researchers to design tabulations that are most useful for their analysis. Using the ACS micro-file, CDA analysts developed demographic profiles that would otherwise not have been available.

Finally, the on-going ACS will benefit the smaller, but more detailed, special-purpose surveys administered by the Census Bureau. Those surveys include the Current Population Survey, the Consumer Expenditure Survey, the American Housing Survey, and the Survey of Income and Program Participation (SIPP). SIPP has proven to be particularly useful because it collects data for the same set of families over time. Analysts in research organizations and universities routinely use these Census surveys to study issues such as welfare, education and taxes at the national level. [8]

Researchers who use the special purpose surveys will indirectly benefit from the ACS. This is because the smaller surveys are adjusted to be consistent with data from the Census Bureau's ongoing population estimates program. The ACS provides a valuable source of information for updating those estimates and, as a result, for updating the population targets for all the nationwide household surveys conducted by the Census Bureau. In addition, the more detailed surveys draw from a sample base that is similar to the ACS. As a result, ongoing updates to the address lists that are part of the ACS program should help reduce data collection problems (i.e., incorrect or invalid addresses) common to household surveys.

In conclusion, Census data are the backbone of a constitutionally-mandated apportionment process and the MAF, TIGER and LUCA programs are essential to producing an accurate and complete census. Census data are valuable to decision makers and policy analysts at the local and regional levels. In addition, these data, including information about Congressional districts, are frequently used by analysts and policymakers who deal with national issues.

ENDNOTES

[1]Margo J. Anderson, *The American Census: A Social History* (New Haven, Conn.: Yale University Press, 1988).

[2]*Ibid.*

[3]Gareth G. Davis and Philippe J. Lacoude, *What Social Security Will Pay: Rates of Return by Congressional District* (Washington, D.C.: The Heritage Foundation, 2000).

[4]Tim Kane, Ph.D., "Who Bears the Burden? Demographic Characteristics of U.S. Military Recruits Before and After 9/11," Heritage Foundation *Center for Data Analysis Report* No. CDA05–08, November 7, 2005, at *www.heritage.org/Research/NationalSecurity/cda05-08.cfm*.

[5]Congressional Budget Office, *Budget Options*, Appendix A, February 2001, at *www.cbo.gov/showdoc.cfm?index=2731&sequence=33* (April 16, 2001).

[6]See for example David B. Muhlhausen, "Do Community Oriented Policing Services Grants Affect Violent Crime Rates?" Heritage Foundation *Center for Data Analysis Report* No. CDA01–05, May 25, 2001, at *www.heritage.org/Research/Crime/CDA01-05.cfm*, and "Research Challenges Claims of COPS Effectiveness," Heritage Foundation *Center for Data Analysis Report* No. 02–02, April 5, 2002, at *www.heritage.org/Research/Crime/CDA02-02.cfm*.

[7]William W. Beach, Alfredo B. Goyburu, Ralph A. Rector, Ph.D., David C. John, Kirk A. Johnson, Ph.D., and Thomas Bingel, "Peace of Mind in Retirement: Making Future Generations Better Off by Fixing Social Security," Heritage Foundation *Center for Data Analysis Report* No. CDA04–06, September 10, 2004, at *www.heritage.org/Research/SocialSecurity/CDA04-06.cfm*.

[8]For an example of the use of data from the AHS and SIPP by CDA analysts, see Robert E. Rector and Kirk A. Johnson, "Understanding Poverty in America," Heritage Foundation *Backgrounder* No. 1713, January 5, 2004, at *www.heritage.org/Research/Welfare/bg1713.cfm*.

****

Ralph A. Rector, Ph.D. is Senior Research Fellow and Project Manager at The Heritage Foundation's Center for Data Analysis (CDA). The CDA conducts research and publishes empirical studies on issues such as education, crime, welfare, and public finance. Rector directs CDA research and development activities, including the development of new computer software and databases. He serves on the Board of Directors of the Council of Professional Associations on Federal Statistics (COPAFS) and the Association of Public Data Users (APDU). Rector holds a Ph.D. in economics from George Mason University.

Ms. FOXX. Thank you.
Dr. Reamer.

STATEMENT OF ANDREW REAMER

Mr. REAMER. Madam Chairman and members of the subcommittee, good morning. I am Andrew Reamer, deputy director of the Urban Markets Initiative at the Brookings Institution, and I appreciate the opportunity to appear before the subcommittee to discuss the elements necessary to the design and implementation of a successful 2010 census.

UMI's mission is to stimulate greater public and private investment in urban communities through improving the availability of data for small areas, and in this regard, the single most important data set is the decennial census. The vitality of America's businesses and economy relies significantly on a successful census.

As the title of this hearing suggests, the decennial census has an even more essential public purpose: enabling apportionment and redistricting. The decennial census is the platform on which we build our democracy. Seats in Congress, in State legislatures, and in city councils are allocated on the basis of the census, and the census is the fundamental mechanism for re-creating our democracy every decade.

In my opinion, achieving a true and precise 2010 census depends upon four elements.

First, we need a complete and accurate Master Address File. Simply put, we cannot count people if we do not know where they live.

Second, we require minimal coverage error, reducing omissions and double-counting.

Third, we need a fully, consistently funded American Community Survey. Taking the long form out of the decennial census will do much to improve coverage.

And, fourth, we need to automate field data collection through the use of handheld computers.

I will review each of these elements in some detail.

Regarding the Master Address File, the completeness and accuracy of the MAF was affected by three issues in 2000: difficulty in capturing fast-growing areas; many group quarters had geocoding and categorization errors; and numerous housing units in small, multi-unit urban buildings were missed.

The good news is that the Census Bureau has in place the elements to address these issues, and there are five important elements to recognize.

The first is the Community Address Updating System [CAUS], which uses American Community Survey field staff on an ongoing basis to update addresses. Our understanding is that CAUS has been successful.

Second, the Bureau has provided a thoughtful, detailed plan to address issues regarding the accuracy of group quarters enumeration, categorization, and geocoding.

Third, Congress passed a law in the 1990's to enable the creation of LUCA, the Local Update of Census Addresses Program, and LUCA provides a framework within which local governments can give addresses to the Census Bureau and still improve accuracy of

the MAF; however, experience indicates that local government participation in 2000 was not nearly what it might have been. There are several barriers to local participation, including a lack of staff resources, capacity, and training. The smaller the community, the greater the barriers. And it is clear that LUCA can be a much more effective program for 2010, and achieving this potential is going to require some active, cooperative relationship between the Census Bureau and local governments, and getting LUCA underway by late 2007 is really a tight window here for getting LUCA up and going—late enough to capture addresses and soon enough to incorporate them into the census.

The fourth element for the MAF is the Update/Enumerate program to capture units in small buildings in urban areas, small multi-unit buildings.

And, last, the Census Bureau should look at working with State governments as a resource for updating the MAF to use detailed administrative records the State governments have available to update address lists.

In combination, these five elements can bring about a more accurate MAF, and I would suggest that this committee, for its own edification, ask the Bureau to report on its approach for preparing the MAF for 2010. With this full understanding, my hope is that Congress can provide the resources to make that happen.

With regard to coverage improvement, in 2000 there were more duplicates and omissions than was optimal, and the Bureau has embarked on a series of efforts to correct these problems, and we at Brookings support these, including testing alternative short forms and approaches for flagging households that have coverage problems.

The American Community Survey, the value of that is that it removes the long form from the decennial census and in doing so allows the Census Bureau to focus entirely on doing an accurate population count. So full funding of the ACS in and of itself will help a more accurate decennial census.

Last is the realm of technologies. It is time to apply 21st century methods of data collection to the decennial census, and the use of handheld computers should lower the cost of data collection quite significantly.

So, in conclusion, an accurate census is vital to our democracy, and I think these four elements will help make that happen. And I will be happy to answer any questions that you might have.

[The prepared statement of Mr. Reamer follows:]

THE BROOKINGS INSTITUTION
URBAN MARKETS INITIATIVE
METROPOLITAN POLICY PROGRAM
1775 Massachusetts Avenue, NW Washington, DC 20036-2188
Tel: 202-797-6131 Fax: 202-797-2970
www.brookings.edu/metro

Andrew Reamer
Deputy Director, Urban Markets Initiative, The Brookings Institution
Testimony before the House Committee on Government Reform, Subcommittee on Federalism and the Census
"Apportionment in the Balance: A Look into the Progress of the 2010 Decennial Census"
March 1, 2006

Introduction

Mr. Chairman and Members of the Subcommittee, good morning. I am Andrew Reamer, Deputy Director of the Urban Markets Initiative (UMI) in the Metropolitan Policy Program of the Brookings Institution. I very much appreciate the opportunity to appear before this subcommittee regarding the elements necessary to the design and implementation of a successful 2010 Census.

At Brookings, UMI's mission is to stimulate greater private and public investment in urban communities through improving the demographic, social, and economic data available on these communities. Accurate, accessible data lead to better understanding of investment opportunities and needs, which in turn lead to greater and more effective investments. In this regard, the single most important dataset, by far, is that provided by the Decennial Census. An accurate count of population by neighborhood and a profile of basic population characteristics, such as age, race, and ethnicity, are absolutely essential information for businesses all across America that need to assess markets. It is no understatement to say that the vitality of America's businesses and economy relies significantly on a successful Census.

As the title of this hearing suggests, the Decennial Census has an even more essential public purpose—providing the foundation for apportionment and redistricting. The Decennial Census is the platform on which we build our democracy at the federal, the state, and the local levels. Seats in Congress, in state legislatures, and in city councils, seats in the Electoral College for choosing our President, are allocated on the basis of the Census. The Census as the fundamental mechanism for

recreating our democracy every ten years is enshrined in the Constitution. The fairness of this democracy is a function of the accuracy of the Census.

An accurate Census also is essential for two key components of federal government operations. Billions of dollars in federal funds are annually distributed where they are needed as indicated by the Census. In addition, Census figures are relied on by the government as it plans for the physical security of Americans.

In my opinion, achieving the goal we all share at this hearing, a true and precise 2010 Census, depends upon four elements. First, we need a complete and accurate Master Address File (MAF). We cannot count people if we do not know where they live, if we are missing units of habitation. Second, we require minimal coverage error—reducing duplicate enumerations, whereby people are counted in more than one place, and omissions, whereby people are not counted at all. Third, we need a fully and consistently funded American Community Survey (ACS). From an operational perspective, taking the complexities of administering the long form out of the Decennial Census will do much to improve coverage. Fourth, we need to automate field data collection, digital methods for a digital age. The availability of handheld computers is very important for increasing enumerator efficiency and enumeration accuracy. I will review each of these elements in greater detail.

Master Address File

According to studies by the National Academy of Sciences and the Census Bureau itself, there were significant problems with the completeness and accuracy of the MAF in 2000. Essentially, the problems were of three types. One, fast growing areas on the edges of settlement were not adequately captured. Two, there were substantial geocoding and categorization errors of group quarters. Third, and very importantly, many, many housing units in small, multi-unit buildings in urban areas were missed. We learned that reliance on city-style mailing addresses greatly increases the likelihood that units in buildings with a single mail drop-off point are overlooked.

The good news is that the Census Bureau has in place the elements to address these three issues. Required is a budget adequate to fund the proper activities, of which there are five, and the administrative will and skill to execute them effectively. The Community Address Updating System (CAUS) is part of the newly implemented American Community Survey and aims, on an ongoing basis, to use ACS field staff to update address and street/road information in areas experiencing

major new development. Our understanding is that CAUS has been successful. Of course, its continued success, its ability to enhance the accuracy of the MAF for 2010, depends on Congress adequately funding the ACS.

In 2005, the Census Bureau provided for public comment a detailed, thoughtful plan to address issues regarding the accuracy of group quarters enumeration, categorization, and geocoding. UMI wrote a letter to OMB in support of the Census Bureau's approach in this regard, and I am submitting this letter for the record.

In 1994, Congress passed important, highly useful legislation, the Census Address List Improvement Act (PL 103-430). This act enabled the creation of a potentially powerful mechanism for improving the MAF, the Local Update of Census Addresses (LUCA) Program. LUCA provides a framework within which local governments can provide updated addresses to the Census Bureau, and so improve the accuracy of the MAF. In its first outing in 2000, LUCA demonstrated its potential, by accounts adding 400-500 thousand addresses that Census would not have otherwise found. However, experience indicates that local government participation in LUCA was not nearly what it might have been. In fact, New York City alone added close to half of the unique new addresses to the MAF. The primary barriers to local participation were lack of staff resources and lack of capacity and training; the smaller the community, the greater these barriers loomed.

Based on lessons learned, LUCA can be a much more effective program, with much higher levels of participation, this time out. To achieve this potential, three elements are necessary. One is the development of an active, cooperative partnership between the Census Bureau and local governments, with a particular focus on adequate training. Two is guidance and active encouragement of smaller governments on using the capacities and resources of higher levels of government, up to and including the states. Third, to have the greatest positive impact on the MAF, LUCA needs to get underway nationwide in late 2007. The window for proper commencement is only a few months in length—too soon, addresses are missed, too late, time is not adequate for local governments to review addresses and for the Census Bureau to incorporate them.

For Census 2000, the Bureau carried out an experimental program for identifying housing units in small multi-unit buildings in urban areas, Update/Enumerate (U/E). Under U/E, Census identifies neighborhoods likely to have numerous buildings without city-style addresses, and dispatches staff to enumerate the building in person. In 2000, the total number of addresses enumerated rose by 14

percent, a significant figure. Another 31 percent of addresses in U/E areas were corrected and. 6 percent of addresses were deleted. Clearly, U/E has significant potential to capture addresses missed by other means. However, to achieve its full potential, U/E needs adequate funding from Congress.

Finally, the Census Bureau should directly utilize state governments as a resource for updating the MAF. State governments maintain detailed administrative records on everything from drivers' licenses to voting records. Our understanding is that the Census Bureau is testing an arrangement with a few states, and if this goes well, the arrangement will be expanded.

In combination, then, CAUS, LUCA, U/E, an improved approach to capturing group quarters, and partnerships with state governments can bring about a far more accurate MAF. As such a MAF is the fundamental prerequisite to a successful Census, I respectfully suggest to this committee that, for its edification, it ask the Census Bureau to report on the Bureau's approach to preparing the MAF for 2010. My hope is that Congress, with full understanding, will provide the resources to allow the Census Bureau to take the steps needed to ensure that all households in America are counted.

Coverage Improvement

According to the coverage evaluation program for Census 2000, there were 9.8 million duplicates and "other residence" erroneous enumerations, and 8.0 million omissions. While the national net error was relatively small, these duplications and omissions were not evenly distributed geographically. For the 2010 Census, everyone agrees, we want coverage errors for states and smaller geographies to be as small as possible.

Recognizing this, the Census Bureau has embarked on a series of efforts to correct the problems that lead to such differences. These efforts include:

- a Decennial Census Short Form Experiment, to test various approaches to wording, instructions and guidance to respondents as to who should and should not be considered part of the household;
- the 2006 Census Test in Travis County, Texas and the Cheyenne River American Indian Reservation, one key aim of which is testing field approaches for reducing coverage error;
- the 2006 Census Test Coverage Followup operation, an effort to test multiple approaches for flagging for enumerator followup households more likely to have coverage problems (e.g., large households); and

- the 2006 Census Coverage Measurement Test, so that Census may accurately measure the rate and type of coverage error.

Additional efforts will be carried out in 2007 and 2008, culminating in the Census Dress Rehearsal in California and North Carolina. UMI strongly supports these Census Bureau efforts to reduce coverage error, and have stated so in letters to the Bureau and OMB. I submit these letters for the record.

American Community Survey

In past censuses, at the same time the Census Bureau was trying to find and count every person, it also had to collect social and economic characteristics from one out of every six households through the "long form." The long form operation made census taking significantly more difficult and took away from the focus on accurately counting the population. Because of the long form, the Census Bureau had to hire thousands of additional temporary census takers and then spend much of the training budget and time teaching them how to ask the long form questions, rather than concentrating on a better count of the population.

Because the long form adds so much complexity to census taking, with the urging of the Congress, the Census Bureau looked for a way to stop the tail from wagging the dog. Working with the Congress over the last decade, the Census Bureau developed a replacement for the long form – the American Community Survey. The ACS is the long form spread out over the decade and it separates the tasks of counting people from collecting the social and economic characteristics the nation and local areas depend on every day. The ACS, in short, does not disrupt the count of the population like the long form did. Moreover, as the continuous operations of the ACS require a permanent, professional field staff, the ACS will allow the Census Bureau to utilize this staff for the purposes of Census 2010, relying less on temporary workers and enhancing the accuracy of the count. Further, as the ACS includes the CAUS program, ACS funding allows the MAF to be updated on a continual basis.

Clearly, the ACS has enormous value in its own right. It will provide annually updated information vital to the improved effectiveness and cost-efficiency of hundreds of federal programs, and will enable local governments and businesses across the nation to make much more informed decisions regarding the allocation of scarce resources. However, Congress should understand that, if it wishes

to have an accurate population count for the purposes of apportionment and redistricting, full and stable funding for the ACS annually is necessary to keep the long form data collection apart from the Decennial Census.

Technology

It is time to apply 21st century methods of data collection to the Decennial Census. The use of Hand Held Computers (HHC) could have significant impacts in terms of the quality and cost of data collection. HHC will reduce the number of enumeration and clerical errors. It will offer cost savings—reducing the number of unnecessary non-response follow-up interviews and the amount of labor necessary to process paperwork. Moreover, the HHC will allow enumerators to simultaneously conduct non-response follow-up interviews and the vacant-delete check, eliminating the need for two separate procedures.

In its 2006 Census Test, the Bureau will be testing HHC to determine the appropriate methods and the correct level and type of investment. It could do so because Congress chose to pass the House version of the Census budget in 2005. To reap the benefits of HHC, Census needs adequate funds for obtaining, testing, and training on this technology between now and 2010.

Conclusion

To reiterate, Mr. Chairman and Members of the Subcommittee, an accurate Decennial Census is vital to our democracy, our economy, and our communities. To achieve an accurate Census, four elements are necessary – a complete Master Address File, methods for substantially reducing coverage error, a fully funded ACS, and adequate investment in technology.

These elements require a steady commitment from Congress between now and April 1, 2010, a commitment of resources that will provide an enormous return on investment for the American people. The returns to Congress itself also will be substantial, enabling the apportionment and redistricting of seats that reflect the true population of each state and its communities. Shortchanging Census preparations because the day of collection is four years away will carry a very high cost in exchange for, in the context of the federal budget, minimal savings.

The importance that Brookings places on a successful 2010 Census is reflected in our decision to host a briefing on the topic for members of Congress and their staff, as well as interested other parties, on April 7, 2006. I wish to express my gratitude to John Cuaderes and his staff, Mr. Chairman, for their strong and continuing support and guidance regarding this effort, as well as our effort last fall in educating appropriations subcommittee members in both Houses about the impacts of proposed Census budget cuts.

On behalf of UMI and the Brookings Institution, I thank you Mr. Chairman and Members of this Subcommittee for the opportunity to provide observations on Census 2010. I am pleased to answer any questions you might have.

THE BROOKINGS INSTITUTION
URBAN MARKETS INITIATIVE
METROPOLITAN POLICY PROGRAM
1775 Massachusetts Avenue, NW Washington, DC 20036-2188
Tel: 202-797-6131 Fax: 202-797-2965
www.brookings.edu/metro

August 22, 2005

Diana Hynek
Departmental Paperwork Clearance Officer
Department of Commerce, Room 6625
14th and Constitution Avenue, NW.
Washington, DC 20230

RE: Request for comments regarding the proposed collection of the 2006 Census Coverage Measurement Test

Dear Ms. Hynek,

On behalf of the Urban Markets Initiative (UMI) of the Brookings Institution, I am pleased to respond to the notice placed by the Department of Commerce in the June 22, 2005 Federal Register asking for comments regarding the proposed 2006 Census Coverage Measurement (CCM) Test.

UMI seeks to stimulate greater private and public investment in urban areas through promoting increased availability, accessibility, and accuracy of community-level demographic and socioeconomic data. From this perspective, UMI applauds the Census Bureau's efforts to identify and improve the components of coverage error for the 2010 Census through the CCM. A more accurate enumeration will do much to improve the overall accuracy of the 2010 Census, which in turn will serve to improve other intercensal federal statistical efforts, including the American Community Survey and the Intercensal Population Estimates Program. These programs provide demographic and socioeconomic data that are heavily relied upon by private and public sector decision-makers.

We support the Bureau's aim to use the CCM test to address the three issues identified in the Federal Register notice. Better understanding coverage error that relates to census residence rules is critical to improving the accuracy of the small-area estimates, especially given the diversity of living arrangements and confusion about where to count a person who may have attachment to more than one address.

We also see the CCM test as a valuable step for addressing a serious problem that occurred in the Census 2000, a significant number of duplicate enumerations. Overcounts can mislead smaller areas about their situation as much as undercounts.

We strongly support the use of the CCM test to aid the Bureau in its 2010 coverage measurement goal of including separate estimates of omissions and erroneous inclusions. These estimates will provide both the Bureau and data users with a better understanding of data accuracy and provide direction for future efforts by the Census Bureau to improve coverage.

While we agree that the objective of determining if conducting the CCM test during census operations will adversely affect the census count is important, we suggest that the Census Bureau also explicitly consider the effects of the CCM on nonresponse to the ACS and CPS. Both are in the field at the same time as the CCM and have content similar to the CCM and the short form. The simultaneity and similarities may confuse people and adversely affect response rates to the various surveys.

From UMI's perspective, taking steps to reduce and measure coverage error is essential. Inaccurate counts of the population and housing units negatively affect the ability of public and private decision-makers, such as retail developers, housing developers, and social service agencies, to make investment decisions appropriate to true population and housing stock size. In addition, inaccurate population and housing counts can lead to geographic misallocation of federal funds; many federal program allocation formulas rely on these numbers.

In conclusion, UMI supports and applauds the Census Bureau's efforts to improve the accuracy of the Census 2010 enumeration through the CCM test. Thank you for the opportunity to voice our thoughts.

Sincerely,

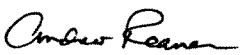

Andrew Reamer
Deputy Director, Urban Markets Initiative

THE BROOKINGS INSTITUTION
URBAN MARKETS INITIATIVE
METROPOLITAN POLICY PROGRAM
1775 Massachusetts Avenue, NW Washington, DC 20036-2188
Tel: 202-797-6131 Fax: 202-797-2965
www.brookings.edu/metro

September 2, 2005

Susan Schechter, OMB Desk Officer
Office of Management and Budget
Washington, DC 20230
via e-mail: susan_schechter@omb.eop.gov

RE: Request for comments regarding the proposed collection of the 2006 Census Test Group Quarters Advance Visit

Dear Ms. Schechter,

On behalf of the Urban Markets Initiative (UMI) of the Brookings Institution, I am pleased to respond to the notice placed by the Department of Commerce in the August 3, 2005 Federal Register asking for comments regarding the proposed collection of the 2006 Census Test Group Quarters Advance Visit (GQAV).

UMI seeks to stimulate greater private and public investment in urban areas through promoting increased availability, accessibility, and accuracy of community-level demographic and socioeconomic data. From this perspective, UMI applauds the Census Bureau's efforts to improve the quality and coverage of the Group Quarters (GQs) enumeration for the 2010 Census through the GQAV. A more accurate GQs enumeration will do much to improve the overall accuracy of small area estimates provided by the 2010 Census, the American Community Survey (ACS), and the Intercensal Population Estimates Program (ICPE). These programs provide demographic and socioeconomic data that are heavily relied upon by private and public sector decision-makers.

We see the proposed changes to GQAV methodology as critical and necessary steps toward addressing three serious issues that occurred in the 2000 Census: duplicate enumerations of GQs, errors in geocoding GQs, and difficulties in properly categorizing addresses as GQs or housing units. First, the Bureau's plans to integrate the two separate address lists for housing units and GQs into one master address file and to create an audit trail for updates to the master list effectively address the causes of duplicate addresses that occurred in the 2000 Census. Second, by focusing on individual GQs rather than Special Places, the 2006 GQAV corrects the Census 2000 geocoding problem. The use of Special Places, rather than individual GQs, as the point of contact for the Census 2000 GQAV led to errors in geocoding GQs to the appropriate local jurisdictions. While these GQ errors do not affect the overall Census population count, they reduce the accuracy of the local population counts and local demographic estimates. Third, the proposed 2006 GQAV survey also aims to provide more appropriate and useful distinctions among housing unit and other categories of living quarters, including GQs, and improve the accuracy of the categorization process.

The combination of duplicate enumerations, errors in geocoding, and miscategorization of addresses in 2000 created a problem regarding the accuracy of the Master Address File (MAF), which serves as the sampling frame for the American Community Survey and other household surveys; moreover, it

affected the accuracy of the overall 2000 Census population count and the local population counts and the profiles of local demographic characteristics available through Census and the ICPE. It appears to us that the approach of the 2006 GQAV appropriately addresses these problems and will improve the quality of the 2010 Census.

In regards to the details of the GQAV methodology, we recommend that the Bureau consider the following issues. The timeframe for the GQAV test (December 5, 2005 through January 13, 2006) happens to fall during winter break for the University of Texas and other community colleges in Travis County. This may affect the Bureau's ability to test the correct classification of group homes versus students sharing apartments. If possible, it may be worthwhile for the Bureau to begin the testing procedure in early December and extend it a week past January 13 if necessary. This is an important issue since this is the last opportunity for the Bureau to test new procedures.

Currently, appendix D, the revised group quarters definition, does not include a detailed definition for senior housing that does not meet the definition of nursing/skilled nursing facilities (e.g. congregate care facilities and continuing care retirement communities). Because assisted living facilities vary widely in their composition – they may stand alone, be attached to or within a nursing facility, be part of a housing complex, or be part of a hospital – and in their level of care and service, it may be confusing for enumerators to determine a unit's correct classification as a GQ or housing unit. A more detailed definition would further reduce potential classification errors.

Finally, attachment H does not specify whether or not the Bureau will correct designations that they find incorrectly labeled as a group quarter or housing unit. We assume the Bureau plans to make such corrections, but if not, we recommend they do so.

From UMI's perspective, the planned improvements in the GQAV are quite important. Problems with accuracy in population count, in frequency and distribution of demographic characteristics, and in housing unit characteristics are of considerable concern; they negatively affect the ability of public and private decision-makers (e.g., retail developers, housing developers, social service agencies) to make investment decisions appropriate to true population and housing stock size and characteristics. In addition, inaccurate population counts lead to geographic misallocation of federal funds. For example, many federal program allocation formulas are based on criteria such as the number of housing units, the age of housing units, and the number of people per housing unit.

In conclusion, UMI supports and applauds the Census Bureau's efforts to improve upon the accuracy of the GQ enumeration. We are hope our comments are useful, and thank you for the opportunity to voice our thoughts about the GQAV program.

Sincerely,

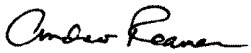

Andrew Reamer
Deputy Director, Urban Markets Initiative

THE BROOKINGS INSTITUTION
URBAN MARKETS INITIATIVE
METROPOLITAN POLICY PROGRAM
1775 Massachusetts Avenue, NW Washington, DC 20036-2188
Tel: 202-797-6131 Fax: 202-797-2965
www.brookings.edu/metro

September 23, 2005

Susan Schechter, OMB Desk Officer
Office of Management and Budget
Washington, DC 20230
via e-mail: susan_schechter@omb.eop.gov

RE: Request for comments regarding the proposed collection of the 2006 Census Test

Dear Ms. Schechter,

On behalf of the Urban Markets Initiative (UMI) of the Brookings Institution, I am pleased to respond to the notice placed by the Department of Commerce in the August 24, 2005 Federal Register asking for comments regarding the proposed 2006 Census Test.

UMI seeks to stimulate greater private and public investment in urban areas through promoting increased availability, accessibility, and accuracy of community-level demographic and socioeconomic data. From this perspective, UMI strongly supports the Census Bureau's efforts to improve the accuracy, efficiency, and cost-effectiveness of the 2010 Census data collection and operation procedures. A more accurate and efficient enumeration will do much to improve the overall accuracy of the 2010 Census, which in turn will serve to improve other intercensal federal statistical efforts, including the American Community Survey (ACS) and the Intercensal Population Estimates (ICPE) Program. These programs provide demographic and socioeconomic data that are heavily relied upon by private and public sector decision-makers. Moreover, this is the last opportunity to evaluate the effects of changes to the methodologies and operational procedures in time to incorporate them into the 2008 Dress Rehearsal. Our comments will focus on the appropriateness of the 2006 Test site locations and the eight components of the test listed in the May 4, 2005 Federal Register Notice and the supporting documentation.

2006 Census Test Site Locations
Given the goals of the 2006 Test - to design and evaluate new methods and procedures to improve accuracy, reduce risk, and/or contain costs - we feel the selected of test sites Travis County, TX and the Cheyenne River American Indian Reservation and Off-Reservation Trust Land in South Dakota are appropriate locations to allow the Bureau to effectively test their methods on and in diverse population and geographic setting.

2006 Census Test Data Collection and Operation Procedures
We support the Bureau's plans to focus the 2006 Test on the eight areas listed in the federal register notice and supporting documentation.

American Indian and Alaska Native Enumeration - Improving the enumeration methods for American Indian Reservations is important for the accuracy of the overall 2010 Census count.

Coverage Improvement and Coverage Error - From UMI's perspective, improving coverage accuracy and measuring the components of coverage error are critical for improving the overall quality of the 2010 census. There were a significant number of duplicate enumerations in the 2000 Census, and inaccurate

population counts can mislead smaller areas about their situation. Better understanding coverage error that relates to census residence rules is critical to improving the accuracy of the small-area estimates, especially given the diversity of living arrangements and confusion about where to count a person who may have attachment to more than one address.

We also support the Bureau's efforts to test and measure the components of coverage error, especially the goal of including separate estimates of omissions and erroneous inclusions. These estimates will provide both the Bureau and data users with a better understanding of data accuracy and provide direction for future efforts by the Census Bureau to improve coverage.

In reviewing the Bureau's plans for the 2006 Census Coverage Measurement Test (CCM) and the 2006 Group Quarters Advanced Visit Test (GQAV), we found the Bureau's approach appropriate.

Automating Field Data Collection – The use of Hand Held Computers (HHC) could have significant impacts in terms of the cost and quality of data collection. Because HHC update each enumerator's assignment list daily, this will reduce the number of unnecessary non-response follow-up interviews, which are costly and irritating to respondents; reduce the amount of physical paper used; reduce the amount of labor necessary to process the paperwork; and reduce the amount of clerical and staff errors. Moreover, the HHC will allow enumerators to simultaneously conduct non-response follow-up interviews and the vacant-delete check, eliminating the need for two separate procedures. It is important that the Bureau test the technology in order to determine the correct level of investment in HHC and in field staff.

Fingerprinting – It is important that the Bureau ensure the safety of their staff and the public, since enumerators will have access to confidential information and be visiting people's homes; therefore it is appropriate for the Bureau to test the feasibility of fingerprinting as an added precaution to the routine background checks conducted on applicants for enumerator positions.

Languages Other than English – Testing the use of language guides and bilingual questionnaires to increase self-response rates is worthwhile given the high cost of non-response follow-up interviews, and the possibility of improving the response rates among populations vulnerable to undercounting, which would help improve coverage accuracy

Improving data collection methods in Group Quarters – In reviewing the Bureau's plans for the GQAV procedures in the Federal Register Notices issued on April 11, 2005 and August 3, 2005, we thought the proposed changes to GQAV methodology were appropriate and necessary steps toward addressing three serious issues that occurred in the 2000 Census: duplicate enumerations of GQs, errors in geocoding GQs, and difficulties in properly categorizing addresses as GQs or housing units.

The combination of these errors in the 2000 Census created problems regarding the accuracy of the Master Address File (MAF), which serves as the sampling frame for the ACS and other household surveys; moreover, it will affect the accuracy of the overall 2000 Census population count, the local population counts, and the profiles of local demographic characteristics available through Census and the ICPE.

In regards to the shelter-based enumeration, it would be useful for the Bureau to clarify the statement on page 15 of the supporting documentation: *"To count residents of shelters, enumerators will obtain a list of all residents who are expected to be living at the shelter ... ."* This direction seems inappropriate given that most people living in shelters are transient; it may be difficult for shelters to provide a list of names rather than just a count of the expected number of people. It also would be useful for the Bureau to provide more information on procedures for reducing the number of duplicate enumerations that occur as a result of people who are at both the shelter and soup kitchen at different times on Census day -- this was a problem in the 2000 Census.

We note that the test sites for conducting the 2006 Test will have a good variety of GQs to test the group quarter and service based enumerations.

In conclusion, UMI strongly supports the 2006 Census Test, and feels that it is essential to the success of the 2010 Census. The Decennial Census is one of the most important data collection efforts undertaken by the federal government; and therefore, the data collection methodologies and procedures should be rigorously tested and evaluated in order to improve coverage of the population and housing inventory for all geographic levels and demographic subgroups. Inaccurate counts of the population and housing units negatively affect the ability of public and private decision-makers, such as retail developers, housing developers, and social service agencies, to make investment decisions appropriate to true population and housing stock size. In addition, inaccurate population and housing counts can lead to geographic misallocation of federal funds; many federal program allocation formulas rely on these numbers.

Moreover, the Decennial Census population counts are the foundation for many of the household surveys conducted by the Census Bureau. As we stated above, the 2010 Census population counts affect the accuracy of ACS, the ICPE, and other household surveys, which are also relied on heavily to guide millions of dollars of public and private investments in the realms of transportation, education, economic development, retail, real estate, health, and public safety. Investing in the accuracy of the 2010 Census now saves the Census Bureau, the federal government, and the American public significant expenditures in time and resources in the future.

UMI appreciates the opportunity to comment on the proposed 2006 Census Test, and we hope our observations and recommendations are of value.

Sincerely,

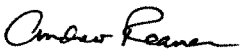

Andrew Reamer
Deputy Director, Urban Markets Initiative

THE BROOKINGS INSTITUTION
URBAN MARKETS INITIATIVE
METROPOLITAN POLICY PROGRAM
1775 Massachusetts Avenue, NW Washington, DC 20036-2188
Tel: 202-797-6131 Fax: 202-797-2965
www.brookings.edu/metro

January 17, 2006

Susan Schechter, OMB Desk Officer
Office of Management and Budget
Washington, DC 20230
via e-mail: susan_schechter@omb.eop.gov

RE: Request for comments regarding the proposed Census 2006 Decennial Short Form Experiment

Dear Ms. Schechter,

On behalf of the Urban Markets Initiative (UMI) of the Brookings Institution, I am pleased to respond to the notice placed by the Department of Commerce in the December 16, 2005 Federal Register asking for comments regarding the proposed 2006 Decennial Short Form Experiment.

UMI seeks to stimulate greater private and public investment in urban areas through promoting increased availability, accessibility, and accuracy of community-level demographic and socioeconomic data. From this perspective, UMI supports the Census Bureau's efforts to improve the quality of data collected in the 2010 Census and the response to the mailed short form. We believe that these efforts will increase the overall accuracy of the 2010 Census; this result, in turn, will improve the quality of ongoing federal demographic statistical efforts, including the American Community Survey and the Intercensal Population Estimates Program.

We support the Bureau's primary focus areas for the Short Form experiment and its approach to addressing these areas, specifically seeking to:

- improve reporting accuracy of the Person 1 listing by testing a revision in question 3 for Person 1;
- reduce respondent confusion by providing a clear stop point on the questionnaire;
- improve coverage accuracy by testing two additional questions at the end of the questionnaire that allows the respondent to check for coverage errors and to inform the Bureau of persons left off the form; and
- improve mail response rates and reduce coverage errors by testing a compressed schedule with explicit due date.

From UMI's perspective, taking steps to reduce error in responses to the Census 2010 short form is essential. Inaccurate counts of the population negatively affect the ability of public and private decision-makers, such as retail developers, housing developers, and social service agencies, to make investment decisions appropriate to true population and housing stock size. In addition, inaccurate population counts can lead to geographic misallocation of federal funds; many federal program allocation formulas rely on these numbers.

To increase the likelihood that the Bureau achieves its important aims, we offer suggestions for changes in several aspects of the short form instrument that relate to the Bureau's experiment.

Person 1, Question 3 – We suggest that the Bureau consider if a definition for "adult" needed to allay any respondent uncertainty regarding an appropriate Person 1. In addition, in the alternative form of this question (forms S1b and S1c), we suggest dropping the first word, "Next," which seems unnecessary and not used elsewhere in the questionnaire.

Final Questions for Everyone, Question 2 (in form S1c) – This experimental question is intended to reduce coverage error by allowing the respondent to list people he or she has excluded with some uncertainty. This question, then, serves as a "backup" mechanism to identify uncertainties remaining after reading the instructions in the p. 1 "Start here" box regarding whom to include and exclude from the household count. We think that coverage accuracy in general and Question 2's value in particular will be improved to the extent that the "exclude" and "include" lists are clear and relatively comprehensive (i.e., cover a multitude of somewhat common household situations). From this perspective, we have some questions and concerns regarding the include/exclude lists, and ask that the Bureau address these:

- If respondents should exclude college students, should they also exclude children in boarding schools?
- In the "exclude" list, the use of "etc." after nursing home and mental hospital could lead to confusion. Some respondents might interpret "etc." to include a short-term hospital stay, a person who actually should be included as part of the household roster. Consider saying "Extended-stay healthcare facility, such as a nursing home or mental hospital."
- Should the "exclude" list mention people who are using the dwelling as a second (e.g., vacation or weekend) home?
- While the "include" list includes babies who "live here," how should respondents treat newborns still at the hospital?
- As the "include" list instructs respondents to list foster children, should the "exclude" list mention household members' children who are in foster care in another household?
- How should respondents treat children in the shared custody of divorced or separated parents?
- How should respondents treat seasonal workers who live in several places during the year?
- In the "exclude" and "include" lists, no mention is made of people who are not permanent U.S. residents. How should respondents treat temporary visitors to the U.S. such as students and nonimmigrant workers? Respondents may be confused as to which non-citizens are supposed to be counted in a census for the United States.

We also suggest that the Bureau consider rephrasing question 2 or the "For example" line underneath to instruct the respondent, before answering, to refer back to the "exclude/include" list in the "Start here" box.

In conclusion, UMI supports and applauds the Census Bureau's efforts to improve the accuracy of the Census 2010 enumeration through the Decennial Short Form Experiment. We hope you find our comments of value, and thank you and the Census Bureau for the opportunity to voice them.

Sincerely,

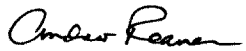

Andrew Reamer, Deputy Director, Urban Markets Initiative

THE BROOKINGS INSTITUTION
URBAN MARKETS INITIATIVE
METROPOLITAN POLICY PROGRAM
1775 Massachusetts Avenue, NW Washington, DC 20036-2188
Tel: 202-797-6131 Fax: 202-797-2965
www.brookings.edu/metro

January 25, 2006

Susan Schechter, OMB Desk Officer
Office of Management and Budget
Washington, DC 20230
via e-mail: susan_schechter@omb.eop.gov

RE: Request for comments regarding the proposed 2006 Census Test Coverage Followup operation

Dear Ms. Schechter,

On behalf of the Urban Markets Initiative (UMI) of the Brookings Institution, I am pleased to respond to the notice placed by the Department of Commerce in the December 28, 2005 Federal Register asking for comments regarding the proposed 2006 Census Test Coverage Followup (CFU) operation.

UMI seeks to stimulate greater private and public investment in urban areas through promoting increased availability, accessibility, and accuracy of community-level demographic and socioeconomic data. From this perspective, UMI supports the Census Bureau's efforts, as detailed in its supporting statement, to improve the coverage of the 2010 Census. We believe that the Bureau's proposed efforts will increase the overall accuracy of the count of people and housing units by location. This result, in turn, should improve the quality of ongoing federal demographic statistical efforts, including the American Community Survey and the Intercensal Population Estimates Program.

For the health of America's urban areas, improving Census 2010 coverage is essential. Inaccurate population counts negatively affect the ability of public and private decision-makers, such as retail developers, housing developers, and social service agencies, to make appropriate investment decisions. In addition, inaccurate counts can lead to geographic misallocation of federal funds; many federal program allocation formulas rely on these numbers.

We believe that the five components of the Bureau's CFU—large households, count discrepancy, coverage probes, unduplication, and administrative records—represent the appropriate approach to determining how to minimize the number of persons counted in more than one household and the number erroneously excluded from any household. To increase the likelihood that the Bureau achieves its goal of improved coverage, we provide several comments (attached) regarding the proposed CFU instruments.

In conclusion, UMI supports and applauds the Census Bureau's efforts to improve the Census 2010 coverage. We hope you find our comments of value, and thank you and the Census Bureau for the opportunity to voice them.

Sincerely,

Andrew Reamer
Deputy Director, Urban Markets Initiative

Comments on ATTACHMENT C - Personal visit questions

Section B - Identifying the Correct Household

- B2 -- What if there are two or more families or unrelated individuals within one household with different last names?
- B8a – Because boats, RVs, tents, and mobile homes are not buildings, it might be clearer if the question were, "How would you describe the type of place where you are living -- as a ...."

Section C - Housing Unit Questions

- C6 -- same comment as for B8a

Section E

- E1 – typo – "move out" printed twice

Section F -

- F2, F7, F10, F15, F19, F27 – should "anyone" be qualified to read "anyone you consider to be part of this household"?
- F2 – Will enumerators have instructions about where to count children in joint custody situations that live in the home of one parent part of the week/month/year and then switch to the other parent's household?

Section H - Exit

- H2 – create boxes for phone number

Attachment B – CATI

This document does not include skip patterns but we assume they are the same as for Attachment C above.

Modules B and C

- See comment on B8a above.

Module E - Movers

- The first question is missing a word ("Did any of the people in your [household?] including those....")
- Regarding the last question about expectation of a "move back here," it seems useful also to ask when the person is expected to move back. For example, if the person moved out because they were jailed or entered the military, the expected return could be years away.

Module F -- Other Addresses

- Instruction, last sentence – suggest alternative wording: "We want (rather than "would like") to make sure everyone in your household (including those people you just mentioned) was counted in only one place of residence."

Ms. FOXX. Thank you.
Dr. Anderson.

STATEMENT OF MARGO ANDERSON

Ms. ANDERSON. Thank you for inviting me to testify. I agree with many of the comments that my colleagues have made, and so I will elaborate on some new ones.

It is quite clear from the busy agenda that the Census Bureau never really stops taking a census; rather, its work is cyclical, and as they move from one plan to the next, they look back and forward.

Relatedly, the world in which a census is taken also changes. Most notably the population grows, but often we are also quite surprised because not only does the population grow, it shifts in differential ways that means that the apportionment and redistricting mechanisms and allocation mechanisms lead to policy changes as a result of it.

In this context, the Census Bureau faces something of a catch–22. Until the count is complete, the true dimensions of change are not clear. And yet the catch–22 the Bureau faces is that it must anticipate that change as it builds the plan, and that is the situation that we are in now.

I think we need to keep that dilemma in mind as we do discuss the plans for 2010 and, in particular, keep the goal in mind of an accurate, efficient, and useful census. And as a result, I agree very much with the comments that my colleagues have made about the need to make sure that LUCA stays on track, that the Master Address File has development technology, and so forth.

I want to make a few more comments about what I call risks and surprises that I see on the horizon and I think others do as well.

The two big risks that are quite new and outside the realm of the Bureau: one is, of course, the budgetary environment, which we have heard much about today; and the second is that we may in 2010 be taking a census while the country is at war for the first time. In other words, the United States has never taken a census when the homeland was under threat, and we have little experience as a Nation anticipating if the war might affect the 2010 count.

We need, as my colleagues have indicated here, to maintain funding in the development of ACS, and the risks to the 2010 count if in some sense anything goes wrong with the ACS off stage, if you will, are substantial, which is another reason to keep the funding moving.

The long-term issue here is for the goal—even though we are talking very much about operational issues at this point in the planning process, is still accuracy and a fair count. And the historical record suggests that the Bureau does well when it has its planning processes under control and when stakeholders, be they Members of Congress, State and local government, advocates for particular demographic groups, feel that the process is a good one and under control. If they do not, those stakeholders have alternative mechanisms to affect the count, including filing lawsuits, changing through legislation the plan, or challenges to participation. So the

building of trust in the operational plan is very, very important, and it needs to be integrated into what we are seeing right now.

Some surprises that we already saw in 2000: The duplicate enumeration issue is a very new one for the census, and I would suggest that even now at the operational stages that we be looking at that one in particular and say, OK, how are we going to solve the problems of duplicates as we move toward 2010?

Group quarters is another one, which you have already heard about.

Are we going to change the short term, in particular, the measurement of race and ethnicity, because the long form is no longer there. There is discussion of moving the ancestry question to the short form. What impact will that have?

Will there be pressure to add information about citizenship status or alien status of the population to the short form census?

In general, we need to sort of keep our eyes on the prize and continue to focus on evaluation of accuracy and fairness. That is always an open question. We can always do better. And I expect that we will be talking about that a great deal in the next 4 years.

Thank you, and I will take questions.

[The prepared statement of Ms. Anderson follows:]

Congressional Testimony

United States House of Representatives
Committee on Government Reform
Subcommittee on Federalism and the Census

March 1, 2006

Testimony on the "*Apportionment in the Balance: A Look into the Progress of the 2010 Decennial Census.*"

By
Margo Anderson.
Professor, History & Urban Studies
University of Wisconsin - Milwaukee
Milwaukee, WI 53201

Mr. Chairman, and Members of the Subcommittee, good morning. Thank you for inviting me to testify at the hearing on the "*Apportionment in the Balance: A Look into the Progress of the 2010 Decennial Census*." I am a Professor of History and Urban Studies at the University of Wisconsin in Milwaukee and specialize in the history of census taking and the development of the United States federal statistical system. I have published several books and numerous articles on statistical policy and census taking. Most recently I coauthored with Stephen E. Fienberg, *Who Counts? The Politics of Census Taking in Contemporary America* and edited *The Encyclopedia of the U.S. Census*. I was a member of the National Academy Panel on Census Requirements for the Year 2000 and Beyond, and have been a fellow at the Woodrow Wilson International Center for Scholars.

I would like to offer some remarks on the ongoing planning for the 2010 Census in light of the preparations currently underway, the methodological and policy concerns facing the census, and the challenges the Census Bureau faces as 2010 nears.

As is quite clear from its busy agenda, the Census Bureau never really stops "taking a census." Rather the work of census taking is highly cyclical, marked by the rhythms of the work involved in taking both the last count and the next count. Planning is always looking forward toward innovation and anticipated needs, and back toward the experience of the previous count (and often earlier censuses). We are currently in the middle years of that cycle. The 2000 count is by and large complete, its evaluations done, its data available for public use. The 2010 count is in development. Much of the framework for making many of the decisions about its final shape has been developed.

But much is still undetermined.

Relatedly, the world in which the census is taken each decade also changes. Most notably, of course, the population grows. That was obvious in the eighteenth century, and is why the framers had the foresight to institutionalize the decennial population count in the 1789 Constitution. But even the framers were surprised when they began taking the census. The framers learned in the early years of census taking that the American population did not grow uniformly. Some states grew faster than others; some demographic groups grew faster than others. Congress anticipated that they would have to enlarge the size of the House of Representatives to admit new states to the union and to add representatives as existing states grew in population. But Congress also learned that differential population growth meant reducing the influence of slower growing states or regions in the House, sometimes by actually taking away representatives from a state. This is, as we all know, a painful and politically charged process.

In this context, the Census Bureau has always faced a profound Catch 22 as it organizes and plans for the next count. Until the count is complete, the true dimensions of the demographic change of the previous decade are unclear. The census results are major news each decade, and once the numbers begin to emerge, demographers, political leaders, the media, and ordinary Americans engage in a noisy and complex debate about their meaning and what the imply for social policy, political power, and economic growth. We are still almost always surprised.

The Catch 22 is that, in order to count well, the bureau must anticipate much of the likely demographic change it will identify when it takes the count. It must count accurately and fairly so that all parties will accept the results for apportionment,

redistricting, and as the foundation of our myriad social policies at the national, state and local levels. This is a very tall order.

It is in this context, I would suggest, that we must evaluate the major innovations for 2010, and their progress thus far. Do we have a consensus that the 2010 count will be accurate, efficient and useful? The innovations include:

(1) evaluating the impact of the implementation of the American Community Survey on the 2010 count;

(2) gauging how the improvement of the MAF/TIGER system and related issues in address development will affect address files;

(3) assessing the technological improvements for managing collection and processing of data in 2010.

There are also issues of accuracy and quality for 2010 that were identified as problems of counting in 2000. These include particularly:

(1) ensuring that people are not omitted from the count;

(2) ensuring that people are not counted more than once (one of the Census 2000 "surprises");

(3) ensuring that the population in non standard residential situations are counted effectively and accurately.

In addition to these concerns, there are contextual factors for all federal government activities that will impact on the 2010 Census. Most obviously, the budgetary environment for the 2010 Census is not a happy one. To this outsider, it appears that the bureau faces curtailing some long standing work, for example, for SIPP,

in order to continue its work in other areas, for example, to continue the development of the ACS. Even more difficult questions can be raised about the possible impact of the war on terror for the 2010 count. The United States has not taken a census when the homeland was under threat, so we have little experience as a nation anticipating if the war might affect the 2010 count.

These considerations suggest additional points about the progress toward 2010.

Address List Development

A successful census is absolutely dependent on the accuracy and quality of the address lists, and for the past 20 years, the bureau has put immense effort in developing the MAF/TIGER system, first as a stand alone, once a decade operation, now as a continuous system. Nevertheless, as the 2000 experience indicated, the lists were uneven, and local government participation in the LUCA program was uneven. Thus the quality of the lists varied in different parts of the country, and the count suffered accordingly. Any improvements to both the system, and to the LUCA program designed to maintain the system, must resolve the barriers to local government involvement.

American Community Survey

The ACS is supposed to help improve the 2010 count by making obsolete the older and very burdensome way of acquiring detailed, local area, "characteristic" information on the American population. That is, the ACS is supposed to take a major burden off the decennial population count and permit a "short form" census. To do so, the ACS funding has to be maintained, and the public and data users must see the ACS as

a successful addition to the national data infrastructure. Now that the ACS is actually in national implementation, and its data are slated to roll out routinely in the future, the success of the ACS, "off stage" if you will, can do much to ease the progress for the 2010 count. Conversely, bumps in the road for ACS, in its administration, its funding, or in its reception and use, will put strain on the 2010 count, and open up a divisive debate about the propriety of dispensing with the long form. The best way to avoid such a debate is to keep the ACS on track, for the bureau to be attuned to, and ready to address, problems with the ACS.

Technology

The Census Bureau pioneered in modern survey administration, from its implementation of punch card technology in 1890, to its introduction of computer technology in 1950, to more recent innovations like FOSDIC and MAF/TIGER. None of these new technologies were without problems, some anticipated, some not. Once again, the bureau is proposing to leap into uncharted territory, and once again, careful evaluation and monitoring are absolutely necessary to insure both improvement and efficiency. As with the introduction of past technologies, there are risks, particularly when compared with slower, perhaps less efficient, but more familiar, technologies.

Accuracy: Overcounts, Undercounts, Miscounts

The key challenge for the success of the census is an accurate count. All the methodology, the statistical science, and the funding is aimed at a goal of an accurate and

fair count. An accurate and fair count is also the standard of quality most understood by the general public. I would suggest that the hot button controversies of the past few censuses will likely reemerge in 2010. Their intensity will depend on whether the public is convinced that the census is accurate and fair. The technological innovations and administrative efforts must be shown to improve accuracy and fairness. The historical record indicates that the Census Bureau loses control of its planning processes when stakeholders, be they members of Congress, state and local governments, or advocates for particular demographic groups, force change in the plan for or implementation of the census, through legislation, court action, or challenges to participation. The process of building trust in the operational plan for the upcoming count is a messy, but absolutely necessary process for ensuring a successful operational plan and census.

Counting Challenges Already on the Horizon:

1. Duplicates in the population count: Can the bureau provide specific information on how the new technologies and the MAF/TIGER updates will reduce duplicate enumerations that faced Census 2000?

2. Omissions in the population count: Can the bureau provide specific information on how the new technologies and the MAF/TIGER updates will prevent the omission of households and individuals?

3. Group quarters: Can the bureau provide specific information on how the new technologies and the MAF/TIGER updates will better count group quarters and reduce errors from geocoding in group quarters.

4. Measurement of Race and Ethnicity. What changes are likely to questions

measuring race and ethnicity? It is my understanding that the bureau is experimenting with including "ancestry," previously an item on the long form, on the short form. Will any changes from current practice impact the quality of the 2010 count?

5. Counting people with ambiguous residency status. Given the way Americans live, the notion of defining a single, fixed residence for each individual may strike you as a fool's errand. Nevertheless, the constitutional requirements of the census necessitate deciding where each individual "belongs." Some population groups are already identified as posing questions for 2010. How will the bureau address concerns about counting prisoners, college students, overseas Americans? How will the bureau build a consensus so that the solutions to the issues of residence are perceived by stakeholders as fair and reasonable.

Counting Challenges from Larger Societal Issues:

Will the bureau be able to acquire the necessary funding to conduct a 2010 census that will serve the nation for the following decade? Will the bureau face the choice between making draconian cuts in its other survey, statistical research, and service programs to fund 2010?

How will issues on the public agenda from the war on terror affect the 2010 Census? In 1970, the counting of overseas military personnel became an issue for the census. If past questionnaires are the guide, the current short form questionnaire will not have questions related to citizenship status or alien status of the population. Will there be interest in such questions for 2010?

Meeting Challenges:

In many ways, the Census Bureau is naturally positioned to meet the challenges of 2010. For example, we know that the bureau is currently testing procedures in Travis County, Texas and at the Cheyenne River Reservation in South Dakota. They are testing question design for race, ethnicity and ancestry for the 2010 count. The 2008 Dress Rehearsal will ideally integrate all the 2010 innovations into a full scale trial run for 2010. In other words, the Census Bureau has not only pioneered in systematic planning of the next count using the best practices available at the time, but also in building testing and evaluation into the planning and implementation processes of the census. The Census Bureau itself developed the methodologies for identifying and measuring the differential undercount, through the innovations of demographic analysis, the post enumeration survey, and dual systems estimation. These evaluation mechanisms should again be deployed for the evaluation of the 2010 count.

On the immediate agenda, evaluation processes must be deployed to insure that the operational innovations currently in development function properly, are cost effective, and are properly administered. But there is another element to such testing and evaluation. Particularly now, when the planning is focused on the operational phases of census taking, we must also remember to set a standard and evaluation procedure to ensure an accurate and fair population count.

That standard always remains an open question for the census. Stakeholders will continue to question how the operational plan provides for the most accurate and fair count possible, and will press to make sure there are procedures to measure the quality of

the coverage integrated into the plan.

Thank you, Mr. Chairman, for the opportunity to testify on these important issues. I would be happy to respond to questions you or members of the subcommittee may have.

Ms. FOXX. Thank you very much.

Dr. Anderson, the first question is for you. What is your opinion of the Bureau's efforts for the decennial census thus far? And you mentioned the issue of trust in your testimony. Do you think the Bureau is building trust for its operational plans with more testing prior to this decennial as compared to the last?

Ms. ANDERSON. I think that they are—you know, as we are sitting here today, they are involved in—I mean, this hearing itself is involved in that process. I would like to see, again, a bit more, mostly because I am very sensitive to the fact that even, as I say, issues off stage, as you heard in the first session about SIPP, have a way of oozing back, if you will, into discussions of the decennial. So I would like to see a more systematic approach to those issues and how it would move forward.

I think the planning process for the 1990's at this point is not as good a guide for what we are doing in this decade simply because the planning process of the 1990's was fraught by changes in direction as the political makeup of Congress and the Presidency shifted over that decade. The planning started with a Republican President and a Democratic Congress, moved to a Democratic President and a Republican Congress, a Republican President and a Democratic Congress and so forth.

Right now we have what looks like a stable planning environment of moving forward. If that continues, it adds grounding to the plan.

Personally, I would like to see a little more discussion of the evaluation and adjustment issues, but that is, again, certainly a political decision that can be made by the administration and Congress together.

Ms. FOXX. Thank you.

This question is for all of you, but I will start with Dr. Reamer and I will work backward that way. If the Bureau plans to start LUCA in June 2007, does that give local governments adequate time to confirm, correct, and add addresses before the decennial?

Mr. REAMER. I am not an expert in the process of the step-by-step process. My understanding from other people who are is that it certainly would be sufficient. But I think a lot has to happen between now and June 2007. What happened last time, my understanding is the National Academy hosted a panel on LUCA that the local governments were not adequately prepared for the LUCA process. A lot of them are small and resource-poor. So I think a lot of planning has to happen between now and mid/late 2007 so that the local governments are aware of what their responsibilities are, what their opportunities are, and how they might work with governments at a higher level, a town working with a county, a county working with a regional planning council, so that the LUCA process—the burdens can be shared locally and participation could rise as a result. So I would like to see a lot of planning between now and 2007.

Ms. FOXX. Dr. Rector.

Mr. RECTOR. Well, like Dr. Reamer, I do not have immediate experience with the LUCA program, but I have heard concerns raised. I think that the 2007 date, what I can tell, is sufficient, but

I would want to emphasize that it is important for the Census Bureau to do an effective job of communicating.

Some of the stories that I have heard indicate that it has not always been clear what information the Census Bureau is actually requesting and how, in fact, the local communities are supposed to supply it to the Census Bureau. And so I think the communication is as important as timing.

Now, with regard to timing, I do think that the 2007 data is important for these local communities, particularly those that need additional resources to actually take advantage of the LUCA program. They have to build that into their budget. And so it is not just a planning of them assigning resources, but actually making sure that there are sufficient funds available to cover the expenses required. And so I think that as much lead time as possible is helpful, but from what I can tell, the 2007 date is sufficient.

Ms. FOXX. Thank you.

Dr. Anderson, do you want to add?

Ms. ANDERSON. A similar kind of response, which is that the communication of the program and one thing that can be done right now is find out how aware State and local governments are that this is coming.

It is understandable that they were ill prepared before 2000 because the law was only passed in, I think, 1994. So there should be a reservoir of experience that really needs to be built on, but it is, again, that kind of integration. This is a very hard task to do this national-to-local kind of communication and support. So anything you can do now to help it along, you know, will be wonderful as we move toward 2000.

The places in the country that did take best advantage of LUCA were ones that knew it early and were sensitive to it.

Ms. FOXX. Thank you.

One more question. Do you all agree that the short form census will provide a more accurate census than a combined short form and long form decennial census? I will start with you, Dr. Rector.

Mr. RECTOR. I think it certainly can, and given the plans that the Census Bureau has put in place, I think that it probably will, and the main reason for that is that they will be able to devote their resources on the short form. And so I think that, certainly given the programs that they have in place, should produce an accurate, complete census.

Mr. REAMER. I agree and will add a couple things, I think. The ACS contributes in a number of ways to a more accurate decennial census. One is, as Dr. Rector says, that by taking the long form activity out of the short form process, you can have staff at the census focus on counting people and not worrying about other things.

But, second, I think importantly is that the ACS itself has enabled the Census Bureau to put in the field a professional permanent staff so that for 2010 it can rely less on temporary workers. It will still have to rely on temporary workers, but it will have a professional staff in the field which will allow it to have a more accurate census.

And then the third aspect is back to the MAF. One component of the American Community Survey is this CAUS program I mentioned, the Community Address Update program. So ACS staff

throughout the decade are updating the MAF through this program, and that also will lead to a more accurate decennial census.

So it is for those three reasons, I think, that we will have a more accurate census.

Ms. ANDERSON. I think if the address listing and development work proceeds well, yes, you are going to do better. Again, as my historian says, there used to be only six questions on the census, and in some ways that is what we are going back to. I would also urge the Bureau to talk about that and to talk about what it is doing, because for most of the American population, of course, this is going to be a big surprise. I mean, they do not know about the ACS and, frankly, are not very interested.

So, again, I also think that there is a programmatic and communications issue here that needs to be addressed.

Ms. FOXX. Thank you. I am sorry. I do have one more question, and it is for Dr. Reamer. The Community Address Updating System is part of the ACS and, as you said, aims on an ongoing basis to use ACS staff to update address information.

As of this date, 1,475 county TIGER maps have been updated to improve the Master Address File, and the contractor plans to deliver the remaining 1,758 county maps by 2008. Would you consider these two updating programs promising? And if you do, would you still recommend that Congress fund the Census 2000 Experimental Update/Enumerate program for this upcoming decennial?

Mr. REAMER. Yes, I do think the two efforts you mentioned will be very helpful, and I think the Update/Enumerate program is separate from those two and is, therefore, important in its own right. It was found in the 2000 census that, particularly in urban areas, small multi-unit buildings where there are not city-style addresses, where there is a single mail drop-off, it was difficult to enumerate because Census was not quite sure how many units were actually in the building. And what Update/Enumerate does is actually targets neighborhoods in which those types of buildings are prominent and then sends people in the field to actually go to the building and go inside and count the doors.

So I think that there is a need over and above CAUS and the TIGER updating for Update/Enumerate, and the 2000 experience seemed to be quite positive in that there were—in the target areas they added 14 percent—the number of addresses went up by 14 percent because of people in the field. They also deleted 6 percent of addresses, but the result was there were more units to count. So I would support funding for that?

Ms. FOXX. Thank you. Do any of you have any brief closing remarks that you would like to make?

[No response.]

Ms. FOXX. Well, before we adjourn, I want to thank our distinguished panels of witnesses for their participation today. I appreciate your willingness to share your knowledge, experiences, and thoughts with us. I would also like to thank my colleagues for their participation today. Clearly, there is a lot involved in planning the 2010 census, and I am pleased to see that the Bureau is making every effort to ensure that the decennial census is the most successful yet.

However, we are not out of the woods yet. Clearly, obstacles remain, but I am confident that by working together we can ensure that the 2010 census is the best ever.

Again, I want to thank our witnesses for their time today. In the event that there may be additional questions we did not have time for today, the record shall remain open for 2 weeks for submitting questions and answers.

Thank you all. We stand adjourned.

[Whereupon, at 12:18 p.m., the subcommittee was adjourned.]

[Additional information submitted for the hearing record follows:]

UNITED STATES DEPARTMENT OF COMMERCE
Economics and Statistics Administration
U.S. Census Bureau
Washington, DC 20233-0001
OFFICE OF THE DIRECTOR

MAR 3 0 2006

The Honorable Michael R. Turner
Chairman, Subcommittee on Federalism
and the Census
Committee on Government Reform
U.S. House of Representatives
Washington, DC 20515-6143

Dear Mr. Chairman:

The enclosed document is in response to your request of March 14, 2006, enclosing questions from the March 1, 2006, "Appointment in the Balance: A Look into the Progress of the 2010 Decennial Census."

If you have further questions, please have a member of your staff contact Mr. Paul Pisano, Chief of our Congressional Affairs Office, at (301) 763-6100.

Sincerely,

Charles Louis Kincannon
Director

Enclosure

Enclosure

Question 1

"You testified that the Bureau's 2003 test of the internet response method resulted in no measurable increase in questionnaire response compared to those who were not given the internet as a questionnaire response option. You also stated that while contemplating the internet response option, you do not foresee it as a main component of the decennial census. Mr. David Powner of GAO testified to the fact that some of the Bureau's internal documentation claim that up to one quarter of respondents could use the Internet to respond to the census and that the Bureau should be prepared to handle an even higher number of Internet responses.

The subcommittee's research has shown that since 2003, 43 percent of U.S. households have adopted broadband internet access and over 69 percent of households are expected to subscribe to a high-speed internet service in time for the 2010 Census. This increase in broadband internet access is one reason more than half of all federal tax returns were e-filed in 2005. Given the advancement in broadband internet technology, it would make sense for the Census Bureau to prepare for the possibility that respondents would rather use the internet than the postal system to respond to the decennial census questionnaire. In light of how this could increase response rates and save taxpayer dollars by cutting the need for return postage, data capture, and some portion of non-response follow-up, what is the Bureau's plan to aggressively integrate the internet in the 2010 Decennial Census."

Response to Question 1

While some earlier assumptions (and hence, some internal documents) had estimated we might receive up to 25 percent of all responses in 2010 via the Internet, our testing this decade has not born this out. Also, although our current assumption is that we will offer this response option in 2010, there are still a number of concerns that must be explored to determine whether or not this is advisable. The public is increasingly concerned about identity theft, spam, and fraud perpetrated via Internet e-mail. We are concerned about these as well, and also must thoroughly explore technical and security issues to ensure we can offer this option without compromising our ability to protect the information and to protect ourselves against various types of Internet attacks, fraud, and duplication.

I would also point out that our testing so far this decade has not demonstrated any increase in overall response from offering the Internet as a response option.

In the 2003 National Census Test, offering alternative modes of response (Internet; Interactive Voice Recognition) did not increase, nor decrease overall response; instead, it simply shifted self-response from paper (mail-back) to the alternative modes. When given the choice to respond by Internet or paper, the overall response rate did not increase, and only 6.7 percent of the households used the Internet to respond.

The 2005 National Census Test did not revisit this research question, but all households were given the option to respond by Internet. Preliminary information from that test shows similar levels of Internet response as in the 2003 National Census Test.

Question 2

"Regarding use of the internet for the decennial census, you expressed concern over internet security. You testified that your desire to use the internet to increase response rates is dampened by the threat of internet scams that could lead to identity theft. How did you come to this conclusion? Did you analyze the reasons why respondents did not respond via the internet? Did test respondents indicate that the reasons why they did not choose to respond via the internet was because they feared of identity theft or did the Bureau assume that this was their reason? Have you researched how the IRS manages this ongoing concern?"

Response to Question 2

Our concerns about the impact of real and perceived security threats to the Internet are not based on feedback from respondents in these tests. Rather, they were based initially on the results of a risk analysis performed by an outside contractor. Identity theft concerns were just one of the risks identified by that analysis. More recently, our Decennial Response Integration System contractor has been studying the additional complexities (and thus costs) that would result from trying to address these concerns for a 2010 Census Internet response system.

Experience across the federal government and private industry demonstrates that the Internet can be used effectively to conduct interactions that are sensitive to the participants. However, the efforts required to do this are not easy nor are they inexpensive. Furthermore, these systems can take years to build, test, and phase into full use, whereas the decennial census has to build a system that will work the first time, nationwide, for just a few weeks, and then be deactivated. This is a very different set of problems than faced by most public and private sector entities.

Among the potentially most challenging of the issues to be resolved are the following:

- There is no ability to control the environment from which the user will attempt to gain access to the enumeration system. For example, we have no control over the security of an individual's home computer.
- Maintenance, active surveillance for malicious/unauthorized activity, and user support costs may be significant.
- Loss of trust resulting in a diminished overall response rate is a possible outcome in the face of widespread reports of failure by the Census Bureau to protect data.

The Census Bureau had a "Phishing" scam last year that indicated that there are opportunities for criminals to act independently of any Census efforts and in a decennial year, would cause major havoc to Census response rates and Census coverage.

Of these, the single most complex issue and most difficult to dissect is the issue of perception—primarily because the discussion is highly subject to the perspective from which one views the issue. Clearly, should a large proportion of the population lose faith in the Census Bureau's promise to protect information provided during the decennial census, collecting sufficient data to meet the Constitutional mandate would be most difficult, if not impossible.

These various issues need to be addressed with respect to offering an Internet response option for the 2010 Census, particularly when the results of our testing so far do not indicate any gains in overall response.

We have begun meetings with the Internal Revenue Service (IRS) to explore these issues. The discussion covered general approaches to risk evaluation and risk mitigation used by the IRS relative to individuals (employees and contractors) connecting to their internal systems. In addition, the discussion explored the concerns and perceived limitations regarding use of the Internet from the Census Bureau perspective. Additional meetings with the IRS are being planned. In addition, we have asked MITRE Corporation to review our plans to ensure we are making the right choices.

Question 3

"In your testimony you mention that the LUCA program will begin in late 2007. GPS street alignment of the TIGER maps that locals will use to check and edit the MAF will not reach completion until April 2008, however. How will the time lapse between the start of LUCA and the completion of TIGER affect the success of the LUCA program?"

Response to Question 3

The realignment of streets and roads is not required for local governments to provide updates to the address list, street pattern, and/or locality boundary under the Local Update of Census Addresses (LUCA) program. The LUCA participant updates the address list and ensures that each address is in the correct census block. The Census Bureau subsequently reconciles the LUCA participant updates with updates from the U.S. Postal Service, the Boundary and Annexation Survey, and any updates from the Topologically Integrated Geographic Encoding and Referencing (TIGER) realignment effort. The TIGER realignment effort needs to be completed in April of 2008 to ensure that this reconciliation will be completed in the summer/fall of 2008. That timing is necessary to produce the field products for the address canvassing operation. The address canvassing operation will verify the information provided by the LUCA participants.

Question 4

"What steps have been taken to address GAO's acquisitions recommendations?"

Response to Question 4

We are in the midst of preparing an action plan per 31 U.S.C., 720, which requires the Census Bureau to submit a written statement of the actions taken on the U.S. Government Accountability Office's recommendations to the Senate Committee on Homeland Security and Governmental Affairs and to the House Committee on Government Reform no later than 60 calendar days from the date of the report (March 1, 2006) and to the House and Senate Gommittees on Appropriations, with the agency's first request for appropriations made more than 60 calendar days after that date. We will share this with you as soon as it is done.

Question 5

"Are you going to conduct a national promotion/education campaign to tell Americans about the American Community Survey and its importance in improving government at all levels?"

Response to Question 5

Yes, the American Community Survey (ACS) Communication, Information, and Education (CIE) staff has been conducting ongoing promotions and outreach on a nationwide scale for some time. Over the last decade, Census Bureau staff have traveled extensively throughout the 50 states and to Puerto Rico to provide national, state, local, and tribal government leaders, community groups, organizations representing a variety of interests and population groups, and the media with information about the ACS and the Puerto Rico Community Survey, including the mandatory requirement to respond, the protection of the respondent's confidentiality, and the benefits of the information produced as a result of data collection. We are using our knowledge of local media markets and information on response rates by census tract to more efficiently target our outreach efforts for maximum exposure. The Census Bureau has developed a variety of promotional media to promote these messages, which include videos, posters, flyers, brochures, booklets, drop-in articles, and related items that are distributed widely through our regional offices, State Data Centers, and Census Information Center networks, Congressional offices, the Puerto Rico Planning Board, and to nongovernment organizations.

The ACS CIE staff conducts a wide range of educational and training activities, which include making presentations, attending meetings, and conducting workshops for a variety of audiences, including representatives of federal, state, local, and tribal governments, businesses, advocacy organizations, national organizations, and the media. The staff also sends out an electronic newsletter called the *ACS Alert* to a growing number of subscribers—currently over 5,000. In 2004, the Census Bureau supplemented its ongoing Congressional communication and education activities with a large-scale initiative where Census Bureau official visited the offices of each Member of Congress (Washington, DC, states, and local districts) and delivered Congressional

Tool Kits that describe ACS operations and data products and provided other information related to the ACS program. The Census Bureau would like to continue this initiative with each successive Congress. Also, plans are in discussion to establish a formal ACS education program when resources become available. The ACS CIE staff is also developing a comprehensive reference manual (called the ACS Data User Training Guide) that will help stakeholders use ACS data appropriately.

Other Census Bureau offices critical to the success of the ACS have also contributed to our nationwide outreach. Staff of the Associate Director for Communications offer standard and specialized training for audiences ranging from social service providers to government officials. The Public Information Office (PIO) organizes and conducts national news conferences and special appearances by the Census Bureau Director and the Associate Director for Decennial Census. The PIO also develops general and targeted materials (for example, drop-in articles) for the news media. The Field Division's Partnership and Data Services Staff (located both at Census Bureau headquarters and in the 12 regional offices) conducts workshops, attends meetings, and develops and distributes materials to support the ACS.

It is important to note that even without a dedicated paid media campaign, Americans have supported the ACS through a strong response rate. The ACS has a 97 percent response rate, which reflects the outreach already conducted and the multilayered notice and follow-up procedures conducted by the Census Bureau. We look forward to continuing to improve education of all who may receive the ACS form.

Economics and Statistics Administration
U.S. Census Bureau
Washington, DC 20233-0001
OFFICE OF THE DIRECTOR

MAR 30 2006

The Honorable Carolyn B. Maloney
U.S. House of Representatives
Washington, DC 20515-3214

Dear Representative Maloney:

The enclosed document is in response to your request of March 2, 2006, enclosing questions from the March 1, 2006, "Appointment in the Balance: A Look into the Progress of the 2010 Decennial Census."

If you have further questions, please have a member of your staff contact Mr. Paul Pisano, Chief of our Congressional Affairs Office, at (301) 763-6100.

Sincerely,

Charles Louis Kincannon
Director

Enclosures

Enclosure

Question I). "Last year I asked for specific information on the plans for measuring the accuracy of the 2010 census. After a long delay, I got a document that did not provide very much information. Please provide the Committee with specific milestones and deadlines for decisions on how you will measure the accuracy; when the operational procedures for that measurement will take place; and when you will report to Congress the accuracy of the 2010 census?"

Census Bureau Response

The main purpose for the Census Coverage Measurement Program (2010 CCM) is to study how coverage error relates to census operations in order to understand how those operations might be improved to reduce coverage error in subsequent censuses. This change in purpose from previous censuses implies a need to provide separate estimates of the components of coverage error (omissions and erroneous inclusions), rather than just the net coverage error. Please refer to the enclosed October 2003 memorandum, "2010 Census Coverage Measurement - Goals and Objectives." Updates to the goal and objectives are documented in the enclosed November 2005 memorandum, "2010 Census Coverage Measurement - Updated Plans."

As a result of the change in purpose and the need to improve how we measure a person's Census Day residence, major changes in the coverage measurement methodology and operations are being developed and tested in activities leading up to the 2010 Census; namely, the 2006 Census Test and the 2008 Dress Rehearsal.

Although we do not plan to evaluate the coverage of the 2006 Census Test, we plan to use the data collected in 2006 to determine whether the coverage measurement methods improve the determination of Census Day residence and whether these data are adequate and consistent to support component and net coverage error estimates. In the 2008 Dress Rehearsal, the focus will shift toward testing the housing unit operations, the various steps in the estimation process, and continuing to search for ways to improve our methodology for estimating component and net coverage error. In addition, we have commissioned a panel of the National Academy of Sciences to help us study the best ways to try to measure error, both net and the separate components, and we expect an initial report in August 2006 and a second report in May 2007.

Our current schedule provides that we will report to Congress the estimates of net coverage for persons and housing units in October 2011, with estimates of coverage error components reported in December 2012. Our plans for conducting major activities and milestones are documented in a September 2005 memorandum, "2010 Census Coverage Measurement - Action Plan." We have enclosed this document for your information.

Question II). "The Census Bureau is considering including a question on ancestry on the 2010 census. Consequently, the Census Bureau will be in the position to provide agencies like the Homeland Security Department with counts of the number of Arab-Americans on a block by block basis. What is the Census Bureau's policy on providing this kind of block level information to law enforcement agencies?"

Census Bureau Response

Any data provided to an external requester, including the Department of Homeland Security, must meet the Census Bureau's disclosure avoidance requirements, which ensure the protection of confidentiality. However, the Census Bureau has no authority to control the uses or users of Census data. In keeping with our policy governing the production of custom tabulations, any custom tabulation produced for an external requester (including the Department of Homeland Security) will be made public. Therefore, it is possible that ancestry data collected in the 2010 Census could be tabulated in response to an external request provided, of course, that confidentiality is protected.

The Census Bureau will make a decision on whether or not to include ancestry on the short form questionnaire by January 2007, following completion of our examination of the 2005 National Census Test results. The Census Bureau included a question about ancestry in the 2005 National Census Test to determine whether data from that question can be used to improve the quality of data on race and Hispanic ethnicity through editing and imputation. Analysis of the results of the test, and the potential operational benefits of including a question on ancestry, is ongoing. Regardless of the conclusions of this analysis, though, the sensitivity of ancestry data will be an important consideration when decisions are made regarding the final content of the 2010 Census questionnaire.

Question III). "The Census Bureau has released at least two memos discussing why they are discontinuing the SIPP. In both cases, the memo states that the reasons for eliminating the SIPP have to do with the lateness of the data and the problems with attrition and non-response. This memo does not acknowledge that the SIPP's non-response rate is the same as the Current Population Survey, the survey we rely on for unemployment rates, which is also conducted by the Census (for BLS) and that compared to the two other national longitudinal surveys, attrition is lower than the Panel Study of Income Dynamics and about the same as the National Longitudinal Study of Youth. Further, data for 2004 was released prior to data from the March Current Population Survey, so it appears Census has worked hard to get the data out quickly. If these reasons for eliminating the SIPP are invalid, is the reason SIPP is being cut purely due to budget constraints, rather than research needs or substantive issues with the data?

Census Bureau Response

The importance of reengineering the Survey of Income and Program Participation (SIPP) and the reengineering process is not purely a budgetary decision. The SIPP needed reengineering regardless of subsequent budgetary prioritization. Even if SIPP's full budget were to be restored, the reengineering process would need to continue.

Our reengineering efforts reflect the need to modernize our survey programs when warranted. While we understand the concern that many people have expressed regarding the Census Bureau's reengineering plans, some of the information is misleading.

In 2005, the Census Bureau began the process of reengineering both the SIPP instruments and data processing systems to alleviate some of the current problems with the timeliness of the data products and the complexity of the processing system, which has been patched together over the years but never updated to reflect new technology; new surveys, such as the American Community Survey (ACS); and the new use of administrative records. In fact, in the years of development of the American Community Survey (ACS), Congress made clear that the Census Bureau should review current surveys to see where savings could be found because of a fully implemented ACS.

The comparisons of the Current Population Survey (CPS) and SIPP nonresponse rates reflect SIPP data that were not the most recent. While it is true that the Wave 1 nonresponse for the 1996 Panel of SIPP was 8 percent, the 2001 rate was 13 percent, and the 2004 rate was 15 percent. Additionally, while a concerted effort to expedite SIPP products in 2004 seems to be proving successful, the 2004 Wave 1 preliminary file data collected from February to May 2004 were released in September 2005. The March CPS data collected from February to April 2005 were released in August 2005. No other data products from the SIPP 2004 Panel have yet been released. The next expected products are the final Wave 1 core and the associated topical modules (recipiency history and employment history), all of which are planned for release by May 2006. The Census Bureau has acknowledged the need to address the problems of both lateness of data and attrition, and the reengineering process reflects the Census Bureau's continued commitment to a healthy, timely, and useful SIPP.

Question IV). "The research community is concerned about the elimination of the SIPP and recognizes that the Census will not be able to replace such a unique and important survey with one costing about 1/8 of the SIPP's budget by 2008. The SIPP took over seven years to develop, as did the American Community Survey, and Congress, as well as private foundations and research institutes, have invested millions in understanding and processing the data. Is there any other place that researchers can get information on program participation and income on a sub-annual basis that is comparable to the SIPP?"

Census Bureau Response

Let me assure you that SIPP is not being eliminated. The Census Bureau's goal for the reengineered SIPP is to continue some of the subannual reporting of data that have been so important to users of SIPP in the past. The SIPP that was developed in the 1980s was appropriate for the time, but since then, respondent cooperation has declined dramatically, and the decision to eliminate overlapping panels (which mitigates the effect of sample attrition) has reduced the cross-sectional utility of these data. The ACS was developed as a replacement for the decennial long form, and the content is dictated by mandate. The SIPP has no comparable content mandate; it was developed as a tool for policy research and analysis.

While the CPS Annual Social and Economic Supplement has a longitudinal component, it excludes movers and includes in-movers so that it remains representative in cross-sectional terms only. Also, the annual recall makes short-term dynamic analysis difficult, if not impossible. The Panel Survey of Income Dynamics began as a longitudinal survey in 1968 and has followed that cohort yearly until 1997, and every second year thereafter. The annual and biennial recall also limit the ability of this survey to study short-term dynamics.

The National Longitudinal Survey of Youth (NLSY) 79 and NLSY 97 are representative of their cohorts only, not of the general population. These two surveys collect information in event history format, collecting dates for the beginning and ending of life events on a biennial and annual basis. Once again, recall length inhibits the study of short-term dynamics. Only the SIPP, with its four-month recall three times annually, is a good vehicle for this type of analysis; however, because of sample attrition, its utility and reliability decline as the panel ages.

To reiterate, our goal with the new reengineered SIPP is to continue some of the sub-annual reporting of data that has been so important to users of SIPP in the past.

Question V). "Without SIPP, we will not be able to adequately study many policy issues, such as the long-term effects of welfare reform or the effects of recent budget cuts and program changes. Is Census concerned about helping Congress evaluate public policy?"

Census Bureau Response

The past uses of SIPP for the evaluation and modeling of future program policies will be a major consideration in the design of the new Income and Program Dynamics' base program. The reengineered SIPP will be expected to generate data that can be used, in a large part, as SIPP data have been used in the past. Other requirements previously met by the existing SIPP survey (example: modules on topics and for population subgroups of particular interest to agencies and analysts) will require sponsorship and support in the form of administrative data to add to our data bank of administrative record sources or in the form of direct funding. Over time, the inclusion of existing surveys, administrative records, and new-instrument data into the reengineered SIPP will provide a rich basis for policymakers to use in decision making, and in some cases more than provided by the existing SIPP program.

The Census Bureau remains committed to gathering the type of information now provided by SIPP. This spring, the Census Bureau will consult federal agencies, private sector researchers, and data users to assist us in the reengineering process. Our reengineering efforts reflect the need to modernize our survey programs when warranted.

○