AUTHENTICATED
U.S. GOVERNMENT
INFORMATION
GPO

S. HRG. 109–242

NOMINATION OF BENJAMIN A. POWELL TO BE GENERAL COUNSEL OF THE OFFICE OF THE DIRECTOR OF NATIONAL INTELLIGENCE

HEARING

BEFORE THE

SELECT COMMITTEE ON INTELLIGENCE

UNITED STATES SENATE

ONE HUNDRED NINTH CONGRESS

FIRST SESSION

JULY 19, 2005

Printed for the use of the Select Committee on Intelligence

Available via the World Wide Web: http://www.access.gpo.gov/congress/senate

U.S. GOVERNMENT PRINTING OFFICE

24–990 PDF WASHINGTON : 2006

For sale by the Superintendent of Documents, U.S. Government Printing Office
Internet: bookstore.gpo.gov Phone: toll free (866) 512–1800; DC area (202) 512–1800
Fax: (202) 512–2250 Mail: Stop SSOP, Washington, DC 20402–0001

SELECT COMMITTEE ON INTELLIGENCE

[Established by S. Res. 400, 94th Cong., 2d Sess.]

PAT ROBERTS, Kansas, *Chairman*
JOHN D. ROCKEFELLER IV, West Virginia, *Vice Chairman*

ORRIN G. HATCH, Utah
MIKE DeWINE, Ohio
CHRISTOPHER S. BOND, Missouri
TRENT LOTT, Mississippi
OLYMPIA J. SNOWE, Maine
CHUCK HAGEL, Nebraska
SAXBY CHAMBLISS, Georgia

CARL LEVIN, Michigan
DIANNE FEINSTEIN, California
RON WYDEN, Oregon
EVAN BAYH, Indiana
BARBARA A. MIKULSKI, Maryland
JON S. CORZINE, New Jersey

BILL FRIST, Tennessee, *Ex Officio*
HARRY REID, Nevada, *Ex Officio*

BILL DUHNKE, *Staff Director*
ANDREW W. JOHNSON, *Minority Staff Director*
KATHLEEN P. MCGHEE, *Chief Clerk*

C O N T E N T S

JULY 19, 2005

	Page
Hearing held in Washington, DC:	
July 19, 2005	1
Statement of:	
Roberts, Hon. Pat, a U.S. Senator from the State of Kansas	1
Martinez, Hon. Mel, a U.S. Senator from the State of Florida	4
Powell, Benajamin A., General Counsel of the Office of the Director of National Intelligence-Designate	7
Prepared statement	6
Supplemental materials:	
Senate Select Committee on Intelligence Questionnaire for Completion by Presidential Nominees	20
Additional questions	113
Glynn, Marilyn L., General Counsel Office of Government Ethics, letter to Hon. Pat Roberts	122

HEARING ON THE NOMINATION OF BENJAMIN A. POWELL TO BE GENERAL COUNSEL OF THE OFFICE OF THE DIRECTOR OF NATIONAL INTELLIGENCE

TUESDAY, July 19, 2005

UNITED STATES SENATE,
SENATE SELECT COMMITTEE ON INTELLIGENCE,
Washington, DC.

The Committee met, pursuant to notice, at 2:41 p.m., in room SDG–50, Dirksen Senate Office Building, the Hon. Pat Roberts (Chairman of the Committee) presiding.

Committee Members Present: Senators Roberts and Levin.

OPENING STATEMENT OF HON. PAT ROBERTS

Chairman ROBERTS. The Committee will come to order.

The Committee meets today to receive testimony on the President's nomination for the newly created position of General Counsel of the Office of the Director of National Intelligence.

Our witness today is the President's nominee, Mr. Benjamin Powell. Mr. Powell, the Committee certainly welcomes you. I note also that members of your family are with you here today. Would you care to introduce them at this time?

Mr. POWELL. Yes, I would, Mr. Chairman.

Sitting right behind me is my wife, Natalie Coburn. We have two young children—one 2½ and one 9 months—but they were not able to join us this afternoon.

Next to her is my brother-in-law, Roy Tubergan. He's a retired FBI former assistant special agent in charge, my sister, Elizabeth Tubergan, who currently works for the FBI, and their two children, Jenny and Brian, and then my parents are up from Miami, Florida—Barbara Powell and Tom Powell. I have a brother who is in the Air Force, a surgeon in the Air Force, and unfortunately he was not able to join us today. He'll be deployed to Iraq in September to take command of the surgical hospital there.

Chairman ROBERTS. Well, bless his heart. We thank him for his service. And, to your parents, welcome to Miami weather—or to Florida weather.

The Committee also welcomes our distinguished colleague from the State of Florida who will introduce the nominee, Senator Mel Martinez. We thank him for being here today.

Last fall, in the Intelligence Reform and Terrorism Prevention Act, Congress created the position of DNI General Counsel. Under the statute, the General Counsel is to serve as the chief legal offi-

cer in the Office of the Director of National Intelligence and perform such functions as the DNI may prescribe.

I believe that Mr. Powell is well-qualified for the position. Since 2002, Mr. Powell has served as an Associate Counsel to the President. Prior to his current position, he was engaged in the private practice of law, both as corporate counsel and as an associate in private law firms.

Mr. Powell also has served as a Law Clerk for Judge John M. Walker, Jr. on the United States Court of Appeals for the Second Circuit, and for Justices Byron White and John Paul Stevens on the United States Supreme Court.

Prior to entering the practice of law, Mr. Powell was a computer scientist with the Federal Bureau of Investigation and served as an officer in the United States Air Force.

If confirmed, I trust that this range of experience will serve Mr. Powell well as he assumes the challenge of being the first General Counsel of the Office of the DNI.

I don't have to remind our nominee that our Nation is at war on a global scale, against a very vicious and determined enemy. The men and women of the Intelligence Community are on the front lines of that war.

The recent attacks in London have reminded all of us that against the terrorists a strong offense is our best defense. The men and women of our Intelligence Community are critical to that strong offense, and we rely on them to help take the fight to the enemy and safeguard the homeland.

While we normally associate operations officers and analysts with such activities, the lawyers of the intelligence community now play significant support roles in these missions and, as a result, can greatly effect the manner in which operations are conducted.

As the DNI's chief legal officer, the General Counsel will play a critical role—not only ensuring that the operations of the intelligence community comply with our Constitution and our laws, but also ensuring that unnecessary or inaccurate interpretations do not deprive the men and women in the Intelligence Community of the tools they need to aggressively target national security threats.

I think Americans need to know that the men and women who serve in our intelligence community are committed to protecting our Constitution, our laws, and our civil liberties. But we also need to realize that if we are overly cautious or we have restrictive rules—not required by our Constitution or laws—sometimes that can be more dangerous to our national security than the rare violations of law, which should be promptly punished.

In fact, as General Hayden stated in his testimony before this Committee during his confirmation as Principal Deputy Director of National Intelligence, the challenge today is not really keeping intelligence officers from stepping across the legal lines—no one wants that—but getting them to even come close to those lines. The attacks of September 11 highlighted the danger posed by allowing overly cautious and inaccurate interpretations of law to control the conduct of intelligence operations.

Mr. Powell, if confirmed, this Committee will look to you and your office to ensure that policy is guided by sound legal interpretations, not any myths or pseudo-legal justifications resulting from

poor or overly cautious legal work. In short, Mr. Powell, I expect the lawyers of the intelligence community, along with the operators and analysts, to step right up to those legal lines to which General Hayden referred. Don't go over them, but step up to them.

Your office must be at the forefront of these legal debates and must resolve disputes that have been within the community for want of legal leadership. This is a very unique, unprecedented kind of situation. Additionally, your office must challenge old opinions that do not account for current operational realities and it must aggressively target legal constraints that unnecessarily inhibit the efforts of our collectors and analysts.

I expect much from the DNI's General Counsel, but I am confident that you are up to the task.

With that said, I welcome you to the Committee and look forward to your testimony. Normally I would now recognize the distinguished Vice Chairman, but he is unavoidably detained. I understand that Senator Levin will be reading Senator Rockefeller's statement, and I recognize the distinguished Senator at this time.

Senator LEVIN. Thank you so much, Mr. Chairman. Let me read Senator Rockefeller's statement. He has requested that I read it if the opportunity presented itself. Here goes.

"I would like to begin by congratulating Mr. Powell on his nomination to be the first General Counsel of the Office of the Director of National Intelligence, and to welcome him and his family to this hearing.

"A word of history would be helpful in explaining the importance of today's hearing. At troubling moments in the past, when adherence of elements of the intelligence community to the rule of law was in doubt, key committees and congressional leaders have recognized the importance, in preventing future misconduct, of legal counsel who have the backing of Presidential appointment and Senate confirmation.

"In 1976, the Church Committee recommended that the CIA General Counsel be nominated by the President and confirmed by the Senate. Supporting that recommendation, Senator Howard Baker wrote in his additional views that a confirmed General Counsel 'adds another check and balance which will result in an overall improvement of the system.'

"In 1987, the House and Senate select committees concluded that the Iran-Contra affair resulted from failures to observe the law. To protect against such events, the Iran-Contra Committees also recommended that the CIA General Counsel be Senate confirmed.

"These proposals finally came to fruition in 1996 when Congress and the President accepted the repeated urging of the Senate Intelligence Committee that, in the words of the Committee's report, 'the confirmation process enhances accountability and strengthens the oversight process.'

"As amended by the Intelligence Reform Act of 2004, the National Security Act mandates that 'The Director of National Intelligence shall ensure compliance with the Constitution and laws of the United States by the Central Intelligence Agency and shall ensure such compliance by other elements of the intelligence community through the host executive departments that manage the pro-

grams and activities that are part of the National Intelligence Program.'

"The General Counsel of the Office of the DNI must play a vital role in assisting the DNI in fulfilling this major responsibility. It is therefore not surprising that the Intelligence Reform Act requires that the DNI General Counsel be appointed by the President with Senate confirmation.

"At several points in his answers to pre-hearing questions, the nominee notes that he would from time to time consult with the Office of Legal Counsel at the Department of Justice. As we now know, the opinions of DOJ's Office of Legal Counsel are of great importance in establishing legal policy for the intelligence community. As we also know, secret legal opinions that are kept even from oversight by the Congress can lead to great error.

"To refer now only to the public record, a major opinion of the Department of Justice on interrogations, issued in August 2002 and often referred to as the torture memorandum, could not withstand the light of day when it was disclosed in June 2004. It was promptly rescinded. The opinion was replaced by a far more supportable, publicly issued opinion in December 2004.

"I believe that our Committee needs the full record of secret Administration legal opinions on detention, interrogation, and rendition matters. To perform our responsibility on behalf of the Senate and the American public, those opinions need to be examined by the Committee's full membership, which includes members of the Judiciary Committee, and by our counsel. One question that I have for the nominee is whether we will have his support and that of the Office of the Director of National Intelligence in obtaining for the Committee the full record of secret law on these important matters.

"I again wish to congratulate the nominee and I look forward to his statement and to the answers to our questions." That is Senator Rockefeller's opening statement, and again I thank you, Mr. Chairman, for permitting me to read that instead of making it part of the record.

Chairman ROBERTS. We thank you, Senator Levin.

I now recognize the distinguished Senator from Florida, Senator Martinez.

Senator LEVIN. Senator Martinez, if you would yield for just a second, I must leave for about 10 minutes. I'm sorry to miss your introduction. I know how important it is not just to the nominee, but to this Committee.

STATEMENT OF HON. MEL MARTINEZ

Senator MARTINEZ. Thank you, Senator.

Mr. Chairman, it's a pleasure to be with you today and to appear before your Committee, and it is an honor for me to recognize an exceptional individual before your Committee, Mr. Ben Powell.

As you know, Ben is the President's nominee to be the General Counsel of the Office of Director of National Intelligence. I truly believe Ben to be an ideal candidate for such an important and timely post.

Mr. Chairman, before I highlight specifics about this position, I would like to briefly share some background about Ben, particu-

larly his strong Florida roots. He is the son of an Air Force pilot. Ben was born at Homestead Air Force Base in Homestead, Florida. Later his father became an airline pilot and the family remained in the Miami area. His mother began a career as an educator, most recently teaching children with learning disabilities.

Growing up in Miami, Ben attended public schools. Mr. Chairman, he was even valedictorian of his Miami South Ridge High School class. Ben received his two undergraduate degrees at the University of Pennsylvania, one in economics and the other in applied science, and graduated magna cum laude.

Subsequently, Ben worked as a computer scientist at the Federal Bureau of Investigation, as well as served as an officer in the United States Air Force where he managed computer and networking programs for parts of the intelligence community.

After leaving the service, Ben attended Columbia Law School where he was senior editor of the Columbia Law Review.

Mr. Chairman, this distinguished legal and professional career led Ben to his current position as Associate Counsel to the President and Special Assistant to the President, a position which makes him uniquely qualified for the nomination at hand. In his current capacity, Ben is actively engaged in various initiatives related to reform and improvement of the intelligence community. The proposed new post with the DNI is a natural follow-on for him.

I speak from a purely parochial point of view when I say that it would be good to have a Floridian in this post, as Ben knows Florida and its unique situation, a State that is heavily involved in trade and tourism, two livelihoods that bring a phenomenal amount of traffic to our ports and to our attractions. Florida is a State that receives 78 million visitors a year and, as such, is a place where vulnerability to terrorists is certainly present.

Mr. Chairman, I would like to echo the other words of welcome that have been made to Ben's family here today. I particularly appreciate Mom and Dad coming from Florida to be up here with us today.

As was noted, his brother is serving in the Air Force and their long history of Air Force service, as well as Ben's current service, is clearly a family filled with committed patriots, and I thank and commend them for their tireless public service.

And, to Ben, I commend you for your willingness to take on these challenges and I stand ready to support you in any way that I can.

Mr. Chairman, I would conclude by saying the President made a fantastic choice in nominating Ben, and I am optimistic that this Committee and the full Senate will quickly advance and approve this important nomination, and I thank you for the courtesy of letting me participate in this important hearing today.

Chairman ROBERTS. Well, we thank you, Senator Martinez, for taking time out of your very valuable schedule to do something that you really wanted to do for your constituent, and we thank you for your service to Florida and to the Senate as well.

Mr. Powell, you may begin.

[The prepared statement of Mr. Powell follows:]

PREPARED STATEMENT OF BENJAMIN A. POWELL, GENERAL COUNSEL OF THE OFFICE OF THE DIRECTOR OF NATIONAL INTELLIGENCE-DESIGNATE

Mr. Chairman, Vice Chairman Rockefeller, I want to thank you and the distinguished Members of this Committee for giving me the opportunity to appear before you and for considering my nomination. I want to thank Senator Martinez for introducing me and taking time out of his busy schedule to appear at this hearing. I am honored that the President has nominated me to be the first General Counsel of the Office of the Director of National Intelligence.

I am happy to be joined by my family today. My wife Natalie has been incredibly supportive of my public service, parents Tom and Barbara Powell have a long record of public service, my sister Elizabeth works for the FBI, my brother-in-law Roy Tubergen, who retired from the FBI as an Assistant Special Agent in Charge, and their children, Brian and Jennie. I have a brother who is a surgeon in the Air Force and could not be with us today. He will be deploying to Iraq in September to take command of the surgical hospital.

If confirmed, I will have the privilege to support two of America's finest public servants, Ambassador John Negroponte and General Michael Hayden. The Committee is familiar with the challenges facing the Director of National Intelligence and his Principal Deputy. Put simply, we must have better intelligence to protect American lives. Part of making our intelligence better is improving the ways in which the intelligence community actually functions as a "community". Many of the responsibilities and authorities provided to the DNI in the Intelligence Reform and Terrorism Prevention Act of 2004 are designed to encourage the intelligence community to act as a unified enterprise, from information access issues to personnel policies to the setting of budget priorities. As General Counsel, a key part of my position will be assisting the DNI in carrying out his mandate from the President to fully exercise the authorities granted to the DNI in the Intelligence Reform Act enacted by Congress.

The Intelligence Reform Act states that the General Counsel shall be the "chief legal officer" of the ODNI and perform such other functions as the DNI may prescribe. Ambassador Negroponte stated to the Committee that the General Counsel will play "a critical role in ensuring all employees or contractors assigned to the Office of the Director of National Intelligence comply with U.S. law and any applicable regulations and directives." He expects that "the GC will be a key member of [his] senior advisory team, provide legal and ethical counsel to ODNI managers and staff members alike, and participate in all significant decisions taken in the Office."

Beyond ensuring compliance with applicable law, the General Counsel will need to work closely with the chief legal officials of the elements of the intelligence community and the chief legal officials of organizations containing elements of the community. The DNI must establish policies and mechanisms in numerous areas across the Community in addition to being the principal intelligence adviser to the President. The General Counsel will need to work with other legal officials to coordinate the development of supporting legal mechanisms to facilitate implementation of DNI policies and guidance. If confirmed, I will look closely at how to structure this relationship to ensure all parts of the intelligence legal community are working together to improve our national security.

The intelligence community must change to confront the global threats of the 21st century. The intelligence community must have legal support to implement the necessary changes. Legal officials must support the community in achieving the goal of providing the President, Congress, the armed services, and other organizations with accurate, timely, and objective intelligence that protects lives, while safeguarding every American's constitutional and statutory rights.

My qualifications for this position include work with the intelligence community both in an operational capacity in the military and as a lawyer in a civilian capacity. I have worked as a lawyer in the Federal Government and in the private sector. I clerked for Judge John M. Walker, Jr. on the United States Court of Appeals for the Second Circuit, and Justice Byron White and Justice John Paul Stevens on the United States Supreme Court. I was an attorney in private practice at the firm Kellogg, Huber, Hansen, Todd & Evans before joining the high-technology sector in Silicon Valley in California as corporate counsel to Vitria Technology, Inc. At Vitria, I handled a wide variety of international legal affairs for the company.

I have a substantial background in national security and technology. I first worked with a component of the intelligence community at the Federal Bureau of Investigation. I next worked with the intelligence community as an Air Force officer, where I managed programs designing, acquiring, installing, and supporting intelligence data handling systems for the intelligence community. This position brought broad exposure to technology issues confronting the intelligence community, includ-

ing the difficult problems in the area of information access. As an Associate Counsel to the President, I have assisted the President and his senior staff in the implementation of historic reforms to the intelligence community. This has required significant interagency coordination across the intelligence community and significant, substantive discussions with the President and his national security team.

The position of General Counsel will present many opportunities and challenges. If confirmed, my first priority will be finding highly talented individuals to work in the General Counsel's Office to ensure the best possible legal support is provided to the DNI and his staff. I have met with the small, current legal staff who are assisting the DNI and know that already there are very talented legal personnel working with the DNI. The DNI will need support from expert legal talent that effectively collaborates with and is able to obtain support from other legal staffs in the community who will have the expertise to address the legal challenges ahead. Second, the legal office will need to focus on review of prior DCI guidance and issuance of DNI guidance and directives to implement the new law, as well as to help establish and maintain effective oversight mechanisms to help spot and address issues before they become problems. This is not to impose burdensome rules and requirements on intelligence officers, but to provide reasonable standards and processes to help guide and support their activities.

Finally, it will be important to ensure legal support, guidance, and direction for three important areas in particular:

• First, helping to ensure a proper balance between the national interest in the collection, dissemination, and maintenance of intelligence and the national interest in protecting the legal rights of all U.S. persons. I will work with the intelligence community, privacy officers, and the new Privacy and Civil Liberties Oversight Board, and others as appropriate to review and as necessary revise current procedures to ensure such a balance.

• Second, it will be important to ensure appropriate legal oversight of the implementation of intelligence activities in light of the continuing transformation of the FBI and CIA and ensure appropriate safeguards are put in place during these transformations.

• Finally, effective implementation of reform will require continued, sustained support from the Congress and this Committee. If confirmed, I will need to work with Congress as we implement reform, and the office will need to consult with the Committee to receive advice from the Committee in many areas. If confirmed, I look forward to a collaborative effort with the Committee to ensure our actions enhance the national security of the country.

Mr. Chairman, I want to thank you and the Committee for this opportunity to appear before you and I am prepared to answer any questions you may have.

STATEMENT OF BENJAMIN A. POWELL, GENERAL COUNSEL OF THE OFFICE OF THE DIRECTOR OF NATIONAL INTELLIGENCE-DESIGNATE

Mr. POWELL. Mr. Chairman, I want to thank you and the distinguished Members of this Committee for giving me the opportunity to appear before you and for considering my nomination. I want to thank Senator Martinez for introducing me and taking time out of his busy schedule to appear at this hearing.

I am honored that the President has nominated me to be the first General Counsel of the Office of Director of National Intelligence. As I mentioned earlier, I'm happy to be joined by my family today. My wife Natalie has been incredibly supportive of my public service, especially with the demands of raising two young children.

If confirmed, I will have the privilege to support two of America's finest public servants, Ambassador John Negroponte and General Michael Hayden. The Committee is familiar with the challenges facing the Director of National Intelligence and his Principal Deputy.

Part of making our intelligence better is improving the ways in which the intelligence community actually functions as a community. Many of the responsibilities and authorities provided to the

DNI in the Intelligence Reform and Terrorism Prevention Act of 2004 are designed to encourage the intelligence community to act as a unified enterprise—from information access issues to personnel policies to the setting of budget priorities.

As General Counsel, a key part of my position will be assisting the DNI in carrying out his mandate from the President to fully exercise the authorities granted to the DNI in the Intelligence Reform Act enacted by Congress. The Intelligence Reform Act states that the General Counsel shall be the chief legal officer of the ODNI and perform such other functions as the DNI may prescribe. Ambassador Negroponte stated to the Committee that the General Counsel will play a critical role in ensuring all employees or contractors assigned to the office comply with U.S. law and any applicable regulations and directives.

Beyond ensuring compliance with applicable law, the General Counsel will need to work closely with the chief legal officials of the elements of the intelligence community and the chief legal officials of organizations containing elements of the community. The General Counsel will need to work with other legal officials to coordinate the development of supporting legal mechanisms to facilitate implementation of DNI policies and guidance.

The intelligence community must change to confront the global threats of the 21st century. Legal officials must support the community in achieving the goal of providing the President, Congress, the armed services and other organizations accurate, timely and objective intelligence that protects lives while safeguarding every American's constitutional and statutory rights.

Senator Martinez and you, Chairman Roberts, have outlined my background and qualifications for this position, which include substantial work in the intelligence community.

The position of General Counsel will present many opportunities and challenges. If confirmed, my first priority will be finding highly talented individuals to work in the General Counsel's office to ensure the best possible legal support is provided to the DNI and his staff. I have met with the small current legal staff who are assisting the DNI and know that there are already very talented legal personnel working with the DNI. The DNI will need support from expert legal talent that effectively collaborates with and is able to obtain support from other legal staffs in the community who have the expertise to address the legal challenges ahead.

Second, the legal office will need to focus on review of prior DCI guidance and issuance of new DNI guidance and directives to implement the new law as well as to help establish and maintain effective oversight mechanisms to help spot and address issues before they become problems.

Finally, it will be important to ensure legal support, guidance and direction for three important areas in particular. First, in helping to ensure a proper balance between the national interest in the collection, dissemination and maintenance of intelligence and the national interest in protecting the legal rights of all U.S. persons. I will work with the intelligence community and others, as appropriate, to review and, as necessary, revise current procedures to ensure such a balance.

Second, it will be important to ensure appropriate legal oversight of the implementation of intelligence activities in light of the continuing transformation of the FBI and CIA and to ensure appropriate safeguards are put in place during these transformations.

Finally, effective implementation of reform will require continued sustained support from the Congress and this Committee. If confirmed, I will need to work with Congress as we implement reform, and the office will need to consult with the Committee to receive advice from the Committee in many areas. If confirmed, I look forward to a collaborative effort with the Committee to ensure our actions enhance the national security of the country.

Mr. Chairman, I want to thank you and the Committee for this opportunity to appear before you, and I am prepared to answer any questions you may have.

Chairman ROBERTS. Mr. Powell, you have already got a gold star for summarizing your statement. It's rare that we have that happen before this Committee, but it's certainly appreciated. We're going to now proceed to questions.

No. 1, do you agree to appear before the Committee here or in other venues, when invited?

Mr. POWELL. Yes, Senator.

Chairman ROBERTS. Do you agree to send intelligence community officials to appear before the Committee and designated staff, when invited?

Mr. POWELL. Yes, Senator.

Chairman ROBERTS. Do you agree to provide documents or any material requested by the Committee in order for it to carry out its oversight and its legislative responsibilities?

Mr. POWELL. Yes, Mr. Chairman, consistent with applicable law and precedent.

Chairman ROBERTS. Will you ensure that all intelligence community elements provide such material to the Committee, when requested?

Mr. POWELL. Yes, Mr. Chairman, consistent with applicable law and precedent.

Chairman ROBERTS. As I alluded to in my opening statement, legal disputes have at times prevented the intelligence community from engaging in certain activities and prevented the sharing of critical information among the elements of the community. As a matter of fact, were Senator Rockefeller here, doubtless he would have had several paragraphs on behalf of information access, as opposed to information-sharing.

What is your understanding of the role you will have in resolving such issues as they arise in the future?

Mr. POWELL. That's an important question, Mr. Chairman. As you know, the President recently determined that the program manager for information-sharing would be a part of the Office of the Director of National Intelligence and report to Ambassador Negroponte. If confirmed as the chief legal officer for the DNI, I will provide the necessary legal support to the program manager.

That will involve working with the chief legal officials of the components of the intelligence community to identify legal impediments to information-sharing that would prevent the program manager from implementing the mandate that he's received from

Congress to ensure effective information across the community to prevent any further terrorist attacks.

Chairman ROBERTS. What steps are you going to take to ensure that the intelligence community avoids what we call the lowest common denominator and overly cautious solutions that were discussed at length in the WMD Commission report?

Mr. POWELL. Mr. Chairman, I am very familiar with that discussion that's contained in the WMD Commission report and the problems of essentially reaching lowest common denominator solutions. I think the creation of an office whose job it is to provide support to the DNI in the legal area and your authorities being derivative from the DNI's authority to oversee the community is an important first step in bringing legal officials together, identifying what the disputes actually are.

In my experience, Senator, I often find just defining what the dispute actually is serves to strip away legal arguments that are used that don't have merit. Sometimes legal arguments are interposed to mask policy arguments, and we want to make sure that that does not happen, that if there is a policy dispute that that can be properly bubbled up, and if there are not legal arguments that have merit, it's important that the policy people then join and make a resolution of that dispute, and it can ultimately go to the DNI for his resolution on policy grounds.

So I think it's important to identify the precise legal dispute and seek a correct answer to see whether or not in fact somebody is just being overly cautious or overly conservative. But often there is a correct answer to these issues, Senator, once they are examined. And I think it's important that there is an office that people can go to to examine it.

One further issue that was discussed in the WMD Commission report is the idea of creating in the General Counsel's office some type of think tank or having people whose job it is to look at these kinds of disputes and provide legal advice for them and, to some extent, wall them off from the day-to-day types of tasks that take everyone's time.

So, if confirmed, that's something I'd look very closely at to prevent the kind of behavior that is discussed in the report.

Chairman ROBERTS. Well, we look forward to your progress in regard to that kind of endeavor. We wish you well. We want you to keep the Committee and our staff well informed in regard to that proposal.

Many rules and regulations that govern the intelligence community have been in place for decades, and not very much attention given to reviewing the legal basis that basically underpins these rules and regulations. My question to you is how do you plan to ensure that controlling the rules and regulations are, first, legally well-founded—that's the foundation that we must not stray away from—but still keep pace with the operational realities?

Mr. POWELL. Senator, one example of that is the WMD Commission noted the inconsistent U.S. persons rules that apply in different agencies, and that it may create legal impediments to information-sharing. The President recently endorsed the recommendation that we undertake a review of those U.S. persons rules and has assigned to the Office of the Director of National Intelligence

the responsibility to undertake that review to see whether items like the U.S. persons rules can be made more consistent, but still keep in place the appropriate safeguards to prevent abuses that may have occurred in the past.

So that's an example of some place where the President said there will be a review of thee rules to make sure that they are keeping pace with current technology.

Chairman ROBERTS. This Committee is extremely interested in improving information access, as I have stated, across the intelligence community. As a direct result of the Committee's efforts in this regard, the community formed something called the Information- Sharing Working Group. I'm trying to figure out what the acronym would be. I'll leave that to Senator Levin to figure out how we pronounce that acronym.

The Information-Sharing Working Group recently completed a study of information access issues and published its report. It did conclude that there were a number of legal issues that should and could be addressed to improve information access. Are you familiar with the Information-Sharing Working Group's efforts?

Mr. POWELL. I am familiar with the group and its efforts. I have not reviewed that report yet, Mr. Chairman.

Chairman ROBERTS. This is just a follow-up and you've already answered this. Do you plan to study and make recommendations concerning the implementation of the working group's recommendation in regard to legal issues? The obvious answer to that is yes.

Mr. POWELL. Yes, Mr. Chairman.

Chairman ROBERTS. As a result of your current work on intelligence reform efforts, are you aware of any changes to existing law or executive order that should be made to enhance information access across the community?

Mr. POWELL. Senator, I do not have any specifics. One of the areas, of course, that is going to be looked at is to make sure that there are consistent U.S. persons rules, to the extent they can be made consistent and still comply with all the applicable laws. That's one area that is going to be looked at.

As the DNI goes forward, one of the things that I would expect that the Office would do, if confirmed, would be to take a look at current executive orders that are in force to see if there are modifications that are necessary to enable the DNI to do his job more effectively.

Chairman ROBERTS. I have several other questions, but I will yield at this particular time—I think I'm probably over the 5 minutes—to Senator Levin.

Senator LEVIN. Thank you, Mr. Chairman.

I believe you joined the White House counsel's office in July of 2002.

Mr. POWELL. Correct, Senator. I believe it was July 29 of 2002.

Senator LEVIN. In August of 2002 the Department of Justice's Office of Legal Counsel issued a memo signed by J. Bybee to then-White House Counsel Judge Gonzalez providing the Office of Legal Counsel's opinion on what standards of conduct in interrogation were required under our anti-torture laws.

The OLC memo stated that, "We conclude that for an act to constitute torture, it must inflict pain that is difficult to endure. Physical pain amounting to torture must be equivalent in intensity to the pain accompanying serious physical injury, such as organ failure, impairment of bodily functions or even death." Were you familiar with that memo when it was sent?

Mr. POWELL. Senator, I had no knowledge of that memo until there were media reports that such a memo existed.

Senator LEVIN. When were they, approximately?

Mr. POWELL. Senator, I think Vice Chairman Rockefeller said in his statement that it became publicly available in June of 2004. That comports with my recollection, Senator. There was a time period I remember when the memo was put on the Internet and was discussed in media reports. That's when I became aware of it.

Senator LEVIN. In January the New York Times reported that there was a second Office of Legal Counsel memo. This is the so-called second Bybee memo addressing the legality of specific interrogation techniques. On February 1, 2005, in a letter to the Chairman of the Senator Judiciary Committee, the Department of Justice stated that it gave "specific advice concerning specific interrogation practices, concluding that they are lawful." The memo addressing the legality of those specific interrogation practices is, of course, still classified. Is that a memo you're familiar with?

Mr. POWELL. It is not, Senator, except for the media report that you referenced.

Senator LEVIN. Do you know what role the White House Counsel's office played in the drafting of that opinion?

Mr. POWELL. No, Senator. I think there may have been questions directed to Judge Gonzalez at his confirmation hearing, and I can't recall what he discussed in terms of his role in that.

Senator LEVIN. In your answers to prehearing questions, you state that, "Congress must be furnished with the information to allow it to consider necessary legislation to improve the performance of the intelligence community." Would you agree that Congress ought to be provided access to all legal opinions governing the conduct of intelligence operations?

Mr. POWELL. Senator, I'm not thoroughly familiar with all of the practices of OLC. I know that they do publish and have historically published some set of memos addressing legal issues. Obviously, they don't publicly make available classified memos. I don't know what their practices have been in terms of making classified legal advice for the President available to the Committee.

That would require a review of applicable separation of powers laws, whether there's any privileges that might apply in the legal arena, Senator. It is something I would have to take a very close look at.

Senator LEVIN. I'm talking now about the way you're going to operate your office if you are confirmed, as to whether Congress ought to be provided with access to all legal opinions that govern the conduct of intelligence operations. Should this Committee receive all those legal opinions or not?

Mr. POWELL. Again, Senator, first it would not be the—those memos that are completed by the Department of Justice would come under the Department of Justice's purview. Second, I do

think it is very important that Congress is fully informed so it has the necessary information to legislate in all of these areas as appropriate.

But whether particular legal opinions and legal advice that are designed, for instance, for the President should be furnished to Congress, there would be a number of issues of separation of powers and privilege that may or may not apply. I'd have to look at the specific facts, the specific issue, who requested the advice, what privileges might apply, Senator.

Senator LEVIN. What privilege is there other than executive privilege that could apply to denying documents to this Committee, other than the President asserting executive privilege?

Mr. POWELL. Senator, I think executive privilege would be one backstop, Senator. I don't know whether there are other historical practices or traditions that might apply. Again, I'd have to look at separation of powers case law, look at the Supreme Court opinions on the subject to determine that.

I think, Senator, we are standing up a new office here and I agree it is very important that we have a collaborative relationship with this Committee. The spirit of the Intelligence Reform Act is that, as I read it, Congress feels the DNI is very important, that it's a critical job and that Congress wants to be supportive of the DNI. At the same time, I think it's important that the office have a very collaborative relationship with this Committee and furnish the Committee with the necessary information.

Senator LEVIN. Well, I've sought that second Bybee memo now for over a year. February 2005 was, I guess, the first time this year when I requested it. It was requested, I should say. April 2005, I talked to Director Negroponte about it during his confirmation hearing. I asked General Hayden about it in April. He said he'd look into it. April 28, at an Armed Services Committee hearing, I asked Under Secretary Cambone for a copy of that memo, the second Bybee memo, as well as another memo which is addressed to the Defense Department. I was told there are people who are diligently working on a reply. That was the answer back in April.

I wrote DCI Porter Goss in May requesting the second Bybee memo. May 18, I got a letter from the CIA Director of Congressional Affairs saying that the Department of Justice would need to approve it. I wrote a letter to Attorney General Gonzalez on July 1, again requesting the second Bybee memo.

Mr. Chairman, I think all of us have a stake in seeing documents such as this. Unless there's an executive privilege asserted by the President, I don't think we ought to, as a Congress, just simply be stonewalled by the executive branch, and I don't care who's in charge of the executive branch—whether it's a democratic President or a republican President.

So I'm going to, through the Chair, make this request again for this second Bybee memo and getting an answer to this request. I would like to—and I know you said you had nothing to do with the second Bybee memo, but I sure as heck would like to have that memo in front of me as I ask questions to you, so I could then, at least in a classified session, should I ask the Chair to go into classified session, be able to press you on the contents of a memo where you were at the White House at the time that memo was delivered.

But I would make that request through the Chair for that second Bybee memo, which I have identified.

Chairman ROBERTS. The Senator's request is noted.

Senator LEVIN. I think maybe I'm out of time. I haven't kept my eye on that. Is it green, red or yellow?

Chairman ROBERTS. I don't you have any problem with it, Senator. I don't see anybody pressing you.

Senator LEVIN. Well, you were nice enough to end your first round at a certain time.

Chairman ROBERTS. As Rudy Vallee said, your time is my time—or my time is your time.

Senator LEVIN. Either way, I'm a old fan of Rudy Vallee.

January of 2002, a draft memo came from White House counsel Judge Gonzalez to the President regarding the Geneva Convention's applicability, and Judge Gonzalez said in his judgment the war against terrorism "renders obsolete Geneva's strict limitations on questioning of enemy prisoners." In your judgment, does it?

Mr. POWELL. Senator, that memo in January of 2002, I believe it was, of course was 7 months before I joined the office, and I did not participate in the review of the Geneva Conventions and writing up or doing any legal research in terms of the applicability of the Geneva Conventions. So I've not looked at the Geneva Conventions' applicability.

I am aware of the general issues that have applied in certain conflicts, and particularly with al-Qa'ida, where you have a group who does not wear insignia, does not carry arms openly, purposely targets civilians, and I think there was substantial concern about how you would apply Geneva in a situation where you have an enemy who is not a contracting party to the Geneva Convention and is engaging in this type of activity.

I do understand that there were parts of the Geneva Convention relating to the provision of pay, provision of musical instruments, provision of scientific instruments for research that did cause substantial concern, from what I understand, Senator.

Senator LEVIN. In February of 2002, the President determined that "as a matter of policy the United States armed forces shall continue to treat detainees humanely and, to the extent appropriate and consistent with military necessary, in a manner consistent with the principles of the Geneva Convention." By the terms of that memorandum, the Presidential determination applied only to the U.S. armed forces.

What is the standard for treating detainees which applies to the intelligence community?

Mr. POWELL. Senator, again that memo was before I joined the office and I didn't participate, obviously, in the formation of that memo that you referred to.

Senator LEVIN. But what standard now applies?

Mr. POWELL. Senator, my understanding is that the intelligence community complies with all applicable U.S. laws, both statutory and constitutional in its treatment of anyone, of any detainees.

Senator LEVIN. Including detainees that are not traditional combatants?

Mr. POWELL. Senator, my understanding is that anybody who is detained, that the intelligence community complies with all U.S. laws that are applicable.

Senator LEVIN. What laws aren't applicable? Is the anti- torture statute applicable to those detainees?

Mr. POWELL. Yes, Senator. As I understand it, the anti-torture statute contained in title 18, the intelligence community of course would be covered by that statute, as are other parts of the Government.

Senator LEVIN. Is it your understanding that the President's determination about humane treatment applies to the intelligence community? The President made a determination on detainees, as he was referring to in his particular determination, applying to the members of the armed forces, but is it your understanding that his determination about treating detainees humanely applies also to the intelligence community, not only to members of the armed forces?

Mr. POWELL. Senator, I'm not sure that—I'm not the legal expert on all of the applicable international laws and standards that would apply. I know that the anti-torture statute, it's my understanding, would apply, and all the other laws that are on the books would apply to the activities of the intelligence community.

When the term "humanely" and other terms are used, we have to take a look at whether those are the terms that are used in the statute, how those terms are interpreted, and how they would apply under statutes such as the anti-torture statute.

Senator LEVIN. Well, this is a Presidential determination which uses the word "treating detainees humanely." My question is, is it your understanding that that determination applies to members of the intelligence community and not just to members of our armed services?

Mr. POWELL. Senator, I would have to go back and take a look at this memo that existed before I even joined the office and talk to legal experts to determine that. If I am confirmed to this position, I will certainly make sure to look very closely at that and make sure that the intelligence community is complying with all applicable laws.

Senator LEVIN. See if you can give us an answer to that question for the record, would you?

Mr. POWELL. Yes, Senator.

Senator LEVIN. Also tell us for the record, unless you want to tell us now, whether or not it is your judgment that treatment of detainees which is described as abusive and degrading, and accurately described as abusive and degrading, can be humane treatment. And, if so, under what circumstances? Since you're not familiar with these terms, I won't press you today, but I will ask that you answer that for the record.

OK?

Mr. POWELL. Yes, Senator, I will give you an answer for the record on that question.

Senator LEVIN. You stated that our laws and the Constitution apply in the case of the war on terror. Is it your understanding that the President, by Executive order or finding, could authorize

an action which is prohibited by our laws or Constitution under his commander-in-chief authority?

Mr. POWELL. Senator, the only place that I have seen this discussed—I'm sure it's decide in law review articles and other things I've not read—is when the August 2002 memo became available, and there was a discussion—as I recall, it was at the end of that memo—on the scope of the President's commander-in-chief power. Of course, in December 2004, that opinion was withdrawn and superseded, and that analysis was no longer in force.

That is the only place where I have become familiar with it, Senator, and that has been withdrawn and is no longer in force.

Senator LEVIN. OK. Thank you.

You were asked, I believe, in your prehearing questions about the Patriot Act renewal legislation and the question of whether or not administrative subpoenas should be authorized to be issued by FBI officials. Your answer was the following: You "support providing those on the front lines of the war on terrorism with the necessary authorities to prevent terrorism, subject to appropriate safeguards." You made reference to some criminal cases where administrative subpoenas were permitted.

Existing criminal law contains numerous protections not included in the administrative subpoena provision in the bill which was reported by the Committee. For example, criminal law, where administrative subpoenas are allowed, requires initial court approval and periodic court review of non-disclosure requirements which are attached to administrative subpoenas. Those safeguards were not contained in the version which was reported by the Committee.

So when you made reference to "subject to appropriate safeguards," were you referring to those types of safeguards which are contained in the criminal law?

Mr. POWELL. Senator, what I was thinking when I answered that about appropriate safeguards are essentially the full universe of safeguards that can apply. Of course there's Attorney General guidelines that the Attorney General puts in to govern the use of various types of subpoenas. Some subpoenas require personal approval by the Attorney General before they can be issued. There's a U.S. Attorney's manual that applies to U.S. Attorneys that can govern the use of certain subpoenas.

Those are the types of safeguards I was thinking about. There are also statutory safeguards, depending upon the type of subpoena or the type of action a law enforcement agent may want to take. Those were the safeguards, as a general matter, that I was talking about.

Of course, the Director of the FBI and the Attorney General are more expert in that area, in their use, and the need for administrative subpoenas than I am. I know that the President has spoken about it and the importance of having that tool. That is used, as you mentioned in other cases. But what safeguards would be appropriate to apply to that particular use of the subpoena, I would really defer to those experts in the law enforcement community as to what is best to allow them to take timely action.

Senator LEVIN. So you don't have an opinion as to whether those specific safeguards that I just identified should be attached to the

nondisclosure requirements where administrative subpoenas are authorized?

Mr. POWELL. Senator, I think in that question I may have mentioned that I have not discussed this with experts in the law enforcement community, so I would have to take a look at it to see how that would impact their use of the tool. Would it prevent them from taking timely action? Would it discourage its use in appropriate situations where quick action needed to be taken, where those subpoenas would be used? Would it essentially eliminate the effectiveness of it? That's just something that I have not talked to the experts in that field about.

Senator LEVIN. Thank you. Thank you, Mr. Chairman.

Chairman ROBERTS. You'll be surprised to learn that we have no further questions for you, and we wish you well in your future endeavors. We will try to schedule your nomination as expeditiously as possible. We thank you.

Mr. POWELL. Thank you, Mr. Chairman, Thank you, Senator Levin.

[Whereupon, at 3:28 p.m., the Committee adjourned.]

SELECT COMMITTEE ON INTELLIGENCE

UNITED STATES SENATE

QUESTIONNAIRE FOR COMPLETION BY PRESIDENTIAL NOMINEES

Effective January 1998

SELECT COMMITTEE ON INTELLIGENCE
UNITED STATES SENATE

QUESTIONNAIRE FOR COMPLETION BY PRESIDENTIAL NOMINEES

PART A - BIOGRAPHICAL INFORMATION

1. NAME: Benjamin A. Powell

2. DATE AND PLACE OF BIRTH: April 7, 1967 Homestead AFB, FL

3. MARITAL STATUS: Married

4. SPOUSE'S NAME: Natalie Coburn

5. SPOUSE'S MAIDEN NAME IF APPLICABLE: _____

6. NAMES AND AGES OF CHILDREN:

NAME	AGE
Sophia Powell	2 years
Keenan Powell	9 months

7. EDUCATION SINCE HIGH SCHOOL:

INSTITUTION	DATES ATTENDED	DEGREE RECEIVED	DATE OF DEGREE
Columbia Law School	8/93-5/96	JD	5/96
University of Pennsylvania	8/85-5/89	BAS/BSE	5/89
Saint Joseph's Univ (AFROTC only)	8/85-5/89	N/A	N/A
Miami-Dade Comm. College	6/86-7/86	N/A	N/A

8. EMPLOYMENT RECORD (LIST ALL POSITIONS HELD SINCE COLLEGE, INCLUDING MILITARY SERVICE. INDICATE NAME OF EMPLOYER, POSITION, TITLE OR DESCRIPTION,

LOCATION AND DATES OF EMPLOYMENT.)

EMPLOYER	POSITION/TITLE	LOCATION	DATES
Executive Office of the President	Associate Counsel to the President	Washington, DC	7/02-present
Vitria Technology, Inc.	Corporate Counsel	Sunnyvale, CA	11/00-7/02
Kellogg, Huber, Hansen, Todd & Evans	Associate	Washington, DC	12/98-8/00
U.S. Supreme Court	Law Clerk to Justices Byron R. White and John Paul Stevens	Washington, DC	8/97-8/98
U.S. Court of Appeals for the Second Circuit	Law Clerk to Hon. John Walker, Jr.	New York, NY	9/96-7/97
Gibson, Dunn & Crutcher	Summer Associate	Washington, DC	Summer 1996
Wachtell, Lipton, Rosen & Katz	Summer Associate	Washington, DC	Summer 1995
Latham & Watkins	Summer Associate	Washington, DC	Summ. 1994, 1995
U.S. Air Force	2lt-Captain	Keesler AFB, MS Hanscom AFB, MA	10/89-3/90 3/90-8/93
Federal Bureau of Investigation	Computer Scientist	Washington, DC	6/89-8/89

9. GOVERNMENT EXPERIENCE (INDICATE EXPERIENCE IN OR ASSOCIATION WITH FEDERAL, STATE OR LOCAL GOVERNMENTS, INCLUDING ADVISORY, CONSULTATIVE, HONORARY OR OTHER PART-TIME SERVICE OR POSITION. DO NOT REPEAT INFORMATION ALREADY PROVIDED IN QUESTION 8):

See Response to Question 8. In addition to the positions listed in question 8, I worked as an Honors Intern for the Federal Bureau of Investigation in Washington, DC on national security programs in Summer 1988.

10. INDICATE ANY SPECIALIZED INTELLIGENCE OR NATIONAL SECURITY EXPERTISE YOU HAVE ACQUIRED HAVING SERVED IN THE POSITIONS DESCRIBED IN QUESTIONS 8 AND/OR 9.

As an Associate Counsel to the President, I have been involved in a number of intelligence and national security issues, primarily focused on Intelligence Community transformation. These tasks have included extensively assisting the President and others on his senior staff in intelligence reform initiatives and the passage of the Intelligence Reform and Terrorism

Prevention Act of 2004 (IRTPA), which required substantial knowledge of the applicable national security law and recommendations for transformation of the Intelligence Community.

In addition to legislation that has extensively transformed the Intelligence Community, the President has issued a number of Executive Orders and Memorandums concerning the transformation of the Intelligence Community, including:

1. Executive Order 13354 entitled "National Counterterrorism Center".

2. Executive Order 13355 entitled "Strengthened Management of the Intelligence Community".

3. Executive Order 13353 entitled "Establishing the President's Board on Safeguarding Americans' Civil Liberties".

4. Executive Order 13356 entitled "Strengthening the Sharing of Terrorism Information To Protect Americans".

5. Executive Order 13328 entitled "Commission on the Intelligence Capabilities of the United States Regarding Weapons of Mass Destruction".

6. Memorandum for the Director of Central Intelligence, Subject: "Strengthening Central Intelligence Agency Capabilities", dated November 23, 2004.

7. Memorandum for the Attorney General, Subject: "Further Strengthening Federal Bureau of Investigation Capabilities" dated November 23, 2004.

8. Memorandum for the Secretary of State, the Secretary of Defense, the Attorney General, and the Director of Central Intelligence, Subject: "Review of Organizational Responsibility for the Conduct of Certain Operations" dated November 23, 2004.

9. Memorandum for the Heads of Executive Departments and Agencies, Subject: "Strengthening Information Sharing, Access, and Integration – Organizational, Management, and Policy Development Structures for Creating the Terrorism Information Sharing Environment" dated June 2, 2005.

10. Memorandum for the Vice President, Secretary of State, Secretary of Defense, Attorney General, Secretary of Homeland Security, Director of OMB, Director of National Intelligence, Assistant to the President for National Security Affairs, and Assistant to the President for Homeland Security and Counterterrorism, Subject: " Strengthening the Ability of the Department of Justice to Meet Challenges to the Security of the Nation" dated June 29, 2005.

Many of these directives required that I be involved in substantial interagency coordination and substantive discussions with the President's national security team.

I advised and assisted the President and others on his senior staff in ensuring that the IRTPA, Executive Orders and other direction complied with the law, improved the ability of the Intelligence Community to prevent harm to America, and reflected policy decisions (for example, the requirement that the DNI have full budget authority).

As part of my work, I also have extensively reviewed the Final Report of the National Commission on Terrorist Attacks Upon the United States ("9/11 Report") and the report of The Commission on the Intelligence Capabilities of the United States Regarding Weapons of Mass Destruction ("WMD Report"). The President has accepted many of the recommendations of the 9/11 Report and directed their implementation. He also has endorsed 70 recommendations contained in the WMD report after a 90 day interagency process and furnished a report to Congress on the recommendations. This has required that I have significant knowledge concerning a number of critical issues concerning the Intelligence Community.

As an officer in the United States Air Force assigned to the Intelligence Data Handling System Program Office of the Directorate for Intelligence and Command, Control, and Communications Countermeasures Systems at the Electronic Systems Center, I supported intelligence data handling requirements of the Intelligence Community. As a Program Manager, I delivered the first Department of Defense intelligence center to exploit and disseminate detection and surveillance data as part of the United States counter-narcotics mission. I also managed a significant program supporting the intelligence data systems required for installation in the then-new National Maritime Intelligence Center. In addition, I did significant work in support of the development and enhancement of the United States Space Command Joint Space Intelligence Center. I did work on data handling systems for a number of other members of the Intelligence Community including Fleet Intelligence Centers and intelligence support to U.S. Central Command and Air Combat Command. Through this work I acquired extensive knowledge of the challenges of designing, acquiring, installing, and supporting both specialized and commercial equipment to support the missions of the Intelligence Community.

At the Federal Bureau of Investigation, I assisted in working on national security programs as an Honors Intern. This included reviewing governing directives on physical security to ensure appropriate direction was given to field offices and developing supporting material for budget requests. As a computer scientist, my work related to database development then underway at the FBI.

11. HONORS AND AWARDS (PROVIDE INFORMATION ON SCHOLARSHIPS, FELLOWSHIPS, HONORARY DEGREES, MILITARY DECORATIONS, CIVILIAN SERVICE CITATIONS, OR ANY OTHER SPECIAL RECOGNITION FOR OUTSTANDING PERFORMANCE OR ACHIEVEMENT):

-Kent Scholar: Recognition of outstanding academic achievement, Columbia Law School, 1994-1995, 1995-1996.

-Stone Scholar: Recognition of superior academic achievement, Columbia Law School, 1993-1994.

-Tony Patiño Fellowship: Award based on public service activities, academic achievement, and leadership ability, Columbia Law School, 1993-1996.

-Air Force Achievement Medal, 1990: Awarded for "direct[] contribut[ion] to the United States counter-narcotics mission by delivering the first Department of Defense intelligence center to exploit and disseminate detection and surveillance data."

-Air Force Commendation Medal, 1993: Awarded for "exemplary technical ability, initiative, leadership, and devotion to duty [that] led directly to enhanced intelligence capabilities for the Unites States Space Command Joint Space Intelligence Center, and the United States Navy National Maritime Intelligence Center."

-National Defense Service Medal, 1991: Active military service during Desert Storm.

-Certificate of Appreciation, American Red Cross, 1989: For volunteer services performed at hospital at Keesler AFB, MS.

-Graduated *magna cum laude*, University of Pennsylvania, 1989. Dean's List 1986-1989.

-Award of Honor, Veterans of Foreign Wars of the United States, 1988: for "true spirit of Patriotism by his endless efforts towards the completion of the Philadelphia Vietnam Veterans Memorial."

12. ORGANIZATIONAL AFFILIATIONS (LIST MEMBERSHIPS IN AND OFFICES HELD WITHIN THE LAST TEN YEARS IN ANY PROFESSIONAL, CIVIC, FRATERNAL, BUSINESS, SCHOLARLY, CULTURAL, CHARITABLE OR OTHER SIMILAR ORGANIZATIONS):

ORGANIZATION	OFFICE HELD	DATES
Friends of National Zoo	Family membership	2003-2005
YMCA of Alexandria	Family membership	2003-present(approx.)

Republican Jewish Coalition	Member	2003 (approx.)
DC Jewish Community Center	Member	1998-2000 (approx.)
Smithsonian Young Benefactors	Member	1999 (approx.)
Columbia Law School Association of DC	Member	1998-99 (approx.)
Columbia Law Review	Senior Editor	1995-96

The American Bar Association enrolled me as a complimentary member for one year upon either graduation from law school or joining the New York bar, according to my best recollection, and the Kellogg Huber law firm's 401(k) plan is administered by the American Bar Association Members' Retirement Program.

I have also been a member of the bar in the District of Columbia (active) since October 1999, New York (active) since February 1999, and California (currently inactive) since October 2001.

13. PUBLISHED WRITINGS AND SPEECHES (LIST THE TITLES, PUBLISHERS, AND PUBLICATION DATES OF ANY BOOKS, ARTICLES, REPORTS OR OTHER PUBLISHED MATERIALS YOU HAVE AUTHORED. ALSO LIST ANY PUBLIC SPEECHES YOU HAVE MADE WITHIN THE LAST TEN YEARS FOR WHICH THERE IS A TEXT OR TRANSCRIPT. TO THE EXTENT POSSIBLE, PLEASE PROVIDE A COPY OF EACH SUCH PUBLICATION, TEXT OR TRANSCRIPT):

-L. H. Ungar, B. A. Powell, and S. N. Kamens, *Adaptive Networks for Fault Diagnosis and Process Control*, Computers and Chemical Engineering, Volume 14, pages 561-72, 1990. (see copy at Attachment 1).

This paper is based on an earlier paper presented at a conference of the American Institute of Chemical Engineers (AIChE): Ungar, L.H. and B. Powell, *Fault Diagnosis Using Nonlinear Adaptive Networks*, AIChE National Meeting, November (1988). (see copy at Attachment 1).

PART B - QUALIFICATIONS

14. QUALIFICATIONS (DESCRIBE WHY YOU BELIEVE YOU ARE QUALIFIED TO SERVE IN THE POSITION FOR WHICH YOU HAVE BEEN NOMINATED):

My response to Question 10 outlines my experience in intelligence and national security matters. I have worked with significant parts of the Intelligence Community in both legal and non-legal positions. I have substantial knowledge of the ongoing transformation of the Intelligence Community and the challenges facing the Director of National Intelligence. I have experience in the interagency coordination and management process, a particularly important issue for the Director of National Intelligence who has significant coordination and management responsibilities over the Intelligence Community. I have significant legal experience covering a broad number of subjects both in the private sector and in government experience. In addition, I have a substantial technology background in both government and the private sector.

PART C - POLITICAL AND FOREIGN AFFILIATIONS

15. POLITICAL ACTIVITIES (LIST ANY MEMBERSHIPS OR OFFICES HELD IN OR FINANCIAL CONTRIBUTIONS OR SERVICES RENDERED TO, ANY POLITICAL PARTY, ELECTION COMMITTEE, POLITICAL ACTION COMMITTEE, OR INDIVIDUAL CANDIDATE DURING THE LAST TEN YEARS):

Contribution to "Bush-Cheney 2000 Compliance Committee Inc." in the amount of $500 on 10/27/2000.

Paid membership dues of $50 for one year to Republican Jewish Coalition on 11/8/2002.

16. CANDIDACY FOR PUBLIC OFFICE (FURNISH DETAILS OF ANY CANDIDACY FOR ELECTIVE PUBLIC OFFICE):

None.

17. FOREIGN AFFILIATIONS

(NOTE: QUESTIONS 17A AND B ARE NOT LIMITED TO RELATIONSHIPS REQUIRING REGISTRATION UNDER THE FOREIGN AGENTS REGISTRATION ACT. QUESTIONS 17A, B, AND C DO NOT CALL FOR A POSITIVE RESPONSE IF THE REPRESENTATION OR TRANSACTION WAS AUTHORIZED BY THE UNITED STATES GOVERNMENT IN CONNECTION WITH YOUR OR YOUR SPOUSE'S EMPLOYMENT IN GOVERNMENT SERVICE.)

A. HAVE YOU OR YOUR SPOUSE EVER REPRESENTED IN ANY CAPACITY (E.G. EMPLOYEE, ATTORNEY, OR POLITICAL/BUSINESS CONSULTANT), WITH OR WITHOUT COMPENSATION, A FOREIGN GOVERNMENT OR AN ENTITY CONTROLLED BY A FOREIGN GOVERNMENT? IF SO, PLEASE FULLY DESCRIBE SUCH RELATIONSHIP.

Yes, for my spouse.

I have not represented a foreign government or an entity controlled by a foreign government to the best of my recollection and knowledge.

My spouse was an attorney from 1998 to 2000 at Cleary Gottlieb Steen & Hamilton LLP, primarily in the field of international project finance. We were married in 2001. She recalls

working on projects involving Petrobras (Brazil oil co.), Intelsat, Petronas (Malaysian oil company), and Electricidade de Portugal. She does not retain records on these matters or a complete list of her projects at the law firm and this reflects her best recollection of significant projects. She has not represented any foreign governments or entities controlled by foreign governments subsequent to her leaving the firm in 2000.

B. HAVE ANY OF YOUR OR YOUR SPOUSE'S ASSOCIATES REPRESENTED, IN ANY CAPACITY, WITH OR WITHOUT COMPENSATION, A FOREIGN GOVERNMENT OR AN ENTITY CONTROLLED BY A FOREIGN GOVERNMENT? IF SO, PLEASE FULLY DESCRIBE SUCH RELATIONSHIP.

If associates is defined as partners or co-owners of businesses, neither my spouse nor I have had associates who have represented a foreign government or an entity controlled by a foreign government.

As an Associate at Kellogg, Huber, Hansen, Todd & Evans, I do not recall representations by the firm of foreign governments or entities controlled by foreign governments, but I did not have knowledge of all clients of the firm. My spouse worked as an Associate at Cleary Gottlieb Steen & Hamilton LLP, an international law firm whose "clients include multinational corporations and international financial institutions and sovereign governments and their agencies, as well as domestic corporations and financial institutions in the countries where our offices are located" according to http://www.cgsh.com/english/about/about.aspx (as of June 14, 2005). See response to 17A.

C. DURING THE PAST TEN YEARS, HAVE YOU OR YOUR SPOUSE RECEIVED ANY COMPENSATION FROM, OR BEEN INVOLVED IN ANY FINANCIAL OR BUSINESS TRANSACTIONS WITH, A FOREIGN GOVERNMENT OR ANY ENTITY CONTROLLED BY A FOREIGN GOVERNMENT? IF SO, PLEASE PROVIDE DETAILS.

No, neither my spouse nor I have been involved in financial or business transactions, except for legal professional work, with foreign governments or entities controlled by foreign governments, or received compensation from such entities.

As Corporate Counsel at Vitria Technology, Inc., I handled transactions with foreign companies that may have had some degree of control by a foreign government. I recall representing Vitria Technology, Inc in negotiating licensing agreements for Vitria's software and professional services with companies in Canada (trucking/logistics company), United Kingdom (telecommunications), Germany (telecommunications), Italy (telecommunications), France (energy/oil), Spain (telecommunications), Portugal (telecommunications), Netherlands (telecommunications), and Slovakia (telecommunications). The ultimate control of the company was generally not relevant to my negotiations of licensing terms or professional information technology services. My work on all these transactions involved my work as an attorney representing Vitria Technology, Inc. and did not involve personal business transactions.

As to my spouse, please see my response to 17A and 17B above.

D. HAVE YOU OR YOUR SPOUSE EVER REGISTERED UNDER THE FOREIGN AGENTS REGISTRATION ACT? IF SO, PLEASE PROVIDE DETAILS.

No.

18. DESCRIBE ANY LOBBYING ACTIVITY DURING THE PAST TEN YEARS, OTHER THAN IN AN OFFICIAL U.S. GOVERNMENT CAPACITY, IN WHICH YOU OR YOUR SPOUSE HAVE ENGAGED FOR THE PURPOSE OF DIRECTLY OR INDIRECTLY INFLUENCING THE PASSAGE, DEFEAT OR MODIFICATION OF FEDERAL LEGISLATION, OR FOR THE PURPOSE OF AFFECTING THE ADMINISTRATION AND EXECUTION OF FEDERAL LAW OR PUBLIC POLICY.

Neither my spouse nor I have engaged in any such lobbying activity.

PART D - FINANCIAL DISCLOSURE AND CONFLICT OF INTEREST

19. DESCRIBE ANY EMPLOYMENT, BUSINESS RELATIONSHIP, FINANCIAL TRANSACTION, INVESTMENT, ASSOCIATION OR ACTIVITY (INCLUDING, BUT NOT LIMITED TO, DEALINGS WITH THE FEDERAL GOVERNMENT ON YOUR OWN BEHALF OR ON BEHALF OF A CLIENT), WHICH COULD CREATE, OR APPEAR TO CREATE, A CONFLICT OF INTEREST IN THE POSITION TO WHICH YOU HAVE BEEN NOMINATED.

I own 113.6842 shares of common stock of Hewlett-Packard Company valued at $2,711.37 as of June 14, 2005. I own 450 shares of Sun Microsystems valued at $1,620 as of June 14, 2005. I am advised that this ownership could create or appear to create a conflict of interest in the position to which I have been nominated. I agree to divest all shares in Hewlett-Packard Company and Sun Microsystems within 90 days of confirmation to the position and abide by an ethics agreement I have signed and furnished to the committee.

20. DO YOU INTEND TO SEVER ALL BUSINESS CONNECTIONS WITH YOUR PRESENT EMPLOYERS, FIRMS, BUSINESS ASSOCIATES AND/OR PARTNERSHIPS OR OTHER ORGANIZATIONS IN THE EVENT THAT YOU ARE CONFIRMED BY THE SENATE? IF NOT, PLEASE EXPLAIN.

Not applicable.

21. DESCRIBE THE FINANCIAL ARRANGEMENTS YOU HAVE MADE OR PLAN TO MAKE, IF YOU ARE CONFIRMED, IN CONNECTION WITH SEVERANCE FROM YOUR CURRENT POSITION. PLEASE INCLUDE SEVERANCE PAY, PENSION RIGHTS, STOCK OPTIONS, DEFERRED INCOME ARRANGEMENTS AND ANY AND ALL COMPENSATION THAT WILL OR MIGHT BE RECEIVED IN THE FUTURE AS A RESULT OF YOUR CURRENT BUSINESS OR PROFESSIONAL RELATIONSHIPS.

Not applicable.

22. DO YOU HAVE ANY PLANS, COMMITMENTS OR AGREEMENTS TO PURSUE OUTSIDE EMPLOYMENT, WITH OR WITHOUT COMPENSATION, DURING YOUR SERVICE WITH THE GOVERNMENT? IF SO, PLEASE PROVIDE DETAILS.

No.

23. AS FAR AS CAN BE FORESEEN, STATE YOUR PLANS AFTER COMPLETING GOVERNMENT SERVICE. PLEASE SPECIFICALLY DESCRIBE ANY AGREEMENTS OR UNDERSTANDINGS, WRITTEN OR UNWRITTEN, CONCERNING EMPLOYMENT AFTER LEAVING GOVERNMENT SERVICE. IN PARTICULAR, DESCRIBE ANY AGREEMENTS, UNDERSTANDINGS OR OPTIONS TO RETURN TO YOUR CURRENT POSITION.

After completing government service, I plan to seek private sector employment to support my family. I am uncertain as to the specifics and location of that employment. I have no agreements or understandings concerning employment after leaving government service. I have no agreement, understanding or option to return to my current position.

24. IF YOU ARE PRESENTLY IN GOVERNMENT SERVICE, DURING THE PAST FIVE YEARS OF SUCH SERVICE, HAVE YOU RECEIVED FROM A PERSON OUTSIDE OF GOVERNMENT AN OFFER OR EXPRESSION OF INTEREST TO EMPLOY YOUR SERVICES AFTER YOU LEAVE GOVERNMENT SERVICE? IF YES, PLEASE PROVIDE DETAILS.

No.

25. IS YOUR SPOUSE EMPLOYED? IF YES AND THE NATURE OF THIS EMPLOYMENT IS RELATED IN ANY WAY TO THE POSITION FOR WHICH YOU ARE SEEKING CONFIRMATION, PLEASE INDICATE YOUR SPOUSE'S EMPLOYER, THE POSITION AND THE LENGTH OF TIME THE POSITION HAS BEEN HELD. IF YOUR SPOUSE'S EMPLOYMENT IS NOT RELATED TO THE POSITION TO WHICH YOU HAVE BEEN NOMINATED, PLEASE SO STATE.

No.

26. LIST BELOW ALL CORPORATIONS, PARTNERSHIPS, FOUNDATIONS, TRUSTS, OR OTHER ENTITIES TOWARD WHICH YOU OR YOUR SPOUSE HAVE FIDUCIARY OBLIGATIONS OR IN WHICH YOU OR YOUR SPOUSE HAVE HELD DIRECTORSHIPS OR OTHER POSITIONS OF TRUST DURING THE PAST FIVE YEARS.

NAME OF ENTITY	POSITION	DATES HELD	SELF OR SPOUSE
None.			

27. LIST ALL GIFTS EXCEEDING $100 IN VALUE RECEIVED DURING THE PAST FIVE YEARS BY YOU, YOUR SPOUSE, OR YOUR DEPENDENTS. (NOTE: GIFTS RECEIVED FROM RELATIVES AND GIFTS GIVEN TO YOUR SPOUSE OR DEPENDENT NEED NOT BE INCLUDED UNLESS THE GIFT WAS GIVEN WITH YOUR KNOWLEDGE AND ACQUIESCENCE AND YOU HAD REASON TO BELIEVE THE GIFT WAS GIVEN BECAUSE OF YOUR OFFICIAL POSITION.)

I have not received such gifts since joining the government in July 2002. I was married in October 2001 when I had no connection to the government and was not an applicant for any government position. We received traditional gifts from guests at the wedding, but we do not have records of the value of such gifts.

28. LIST ALL SECURITIES, REAL PROPERTY, PARTNERSHIP INTERESTS, OR OTHER INVESTMENTS OR RECEIVABLES WITH A CURRENT MARKET VALUE (OR, IF MARKET VALUE IS NOT ASCERTAINABLE, ESTIMATED CURRENT FAIR VALUE) IN EXCESS OF $1,000. (NOTE: THE INFORMATION PROVIDED IN RESPONSE TO SCHEDULE A OF THE DISCLOSURE FORMS OF THE OFFICE OF GOVERNMENT ETHICS MAY BE INCORPORATED BY REFERENCE, PROVIDED THAT CURRENT VALUATIONS ARE USED.)

DESCRIPTION OF PROPERTY	VALUE	METHOD OF VALUATION

I incorporate by reference disclosures filed with the Office of Government Ethics.

Additional Information:

House, Alexandria, VA	786,600	City assessment
Car, 2004 Toyota Sienna	30,000	Estimate
Car, 1995 Honda Accord	4,000	Estimate
Car, 1995 Ford Escort	1,200	Estimate

29. LIST ALL LOANS OR OTHER INDEBTEDNESS (INCLUDING ANY CONTINGENT LIABILITIES) IN EXCESS OF $10,000. EXCLUDE A MORTGAGE ON YOUR PERSONAL RESIDENCE UNLESS IT IS RENTED OUT, AND LOANS SECURED BY AUTOMOBILES, HOUSEHOLD FURNITURE OR APPLIANCES. (NOTE: THE INFORMATION PROVIDED IN RESPONSE TO SCHEDULE C OF THE DISCLOSURE FORM OF THE OFFICE OF GOVERNMENT ETHICS MAY BE INCORPORATED BY REFERENCE, PROVIDED THAT CONTINGENT LIABILITIES ARE ALSO INCLUDED.)

NATURE OF OBLIGATION	NAME OF OBLIGEE	AMOUNT

None.

I incorporate by reference disclosures filed with the Office of Government Ethics.

30. ARE YOU OR YOUR SPOUSE NOW IN DEFAULT ON ANY LOAN, DEBT OR OTHER FINANCIAL OBLIGATION? HAVE YOU OR YOUR SPOUSE BEEN IN DEFAULT ON ANY LOAN, DEBT OR OTHER FINANCIAL OBLIGATION IN THE PAST TEN YEARS? HAVE YOU OR YOUR SPOUSE EVER BEEN REFUSED CREDIT OR HAD A LOAN APPLICATION DENIED? IF THE ANSWER TO ANY OF THESE QUESTIONS IS YES, PLEASE PROVIDE DETAILS.

No.

31. LIST THE SPECIFIC SOURCES AND AMOUNTS OF ALL INCOME RECEIVED DURING THE LAST FIVE YEARS, INCLUDING ALL SALARIES, FEES, DIVIDENDS, INTEREST, GIFTS, RENTS, ROYALTIES, PATENTS, HONORARIA, AND OTHER ITEMS EXCEEDING $200. (COPIES OF U.S. INCOME TAX RETURNS FOR THESE YEARS MAY BE SUBSTITUTED HERE, BUT THEIR SUBMISSION IS NOT REQUIRED.)

See attachment 2.

	2000	2001	2002	2003	2004
SALARIES					
FEES					
ROYALTIES					
DIVIDENDS					
INTEREST					
GIFTS					
RENTS					
OTHER					
TOTAL					

32. IF ASKED, WILL YOU PROVIDE THE COMMITTEE WITH COPIES OF YOUR AND YOUR SPOUSE'S FEDERAL INCOME TAX RETURNS FOR THE PAST THREE YEARS.

Yes.

33. LIST ALL JURISDICTIONS IN WHICH YOU AND YOUR SPOUSE FILE ANNUAL INCOME TAX RETURNS.

United States and Virginia for 2004.

34. HAVE YOUR FEDERAL OR STATE TAX RETURNS BEEN THE SUBJECT OF AN

AUDIT, INVESTIGATION OR INQUIRY AT ANY TIME? IF SO, PLEASE PROVIDE DETAILS, INCLUDING THE RESULT OF ANY SUCH PROCEEDING.

No.

35. IF YOU ARE AN ATTORNEY, ACCOUNTANT, OR OTHER PROFESSIONAL, PLEASE LIST ALL CLIENTS AND CUSTOMERS WHOM YOU BILLED MORE THAN $200 WORTH OF SERVICES DURING THE PAST FIVE YEARS. ALSO, LIST ALL JURISDICTIONS IN WHICH YOU ARE LICENSED TO PRACTICE.

I am licensed to practice law in the District of Columbia (active status), New York (active status), and California (inactive status).

Clients:

1. Vitria Technology, Inc. employed as full-time Corporate Counsel from 2000 to 2002.

2. As an Associate at Kellogg, Huber, Hansen, Todd & Evans in July/August 2000, I worked on a litigation matter for the Hyatt Corporation, a litigation matter for the Conwood Company, and a short research project for a telecommunication company that may have involved billing more than $200 in July/August 2000, to the best of my recollection. I did not retain billing records from the firm for July/August 2000 and do not recall working on other major matters in this timeframe.

36. DO YOU INTEND TO PLACE YOUR FINANCIAL HOLDINGS AND THOSE OF YOUR SPOUSE AND DEPENDENT MEMBERS OF YOUR IMMEDIATE HOUSEHOLD IN A BLIND TRUST? IF YES, PLEASE FURNISH DETAILS. IF NO, DESCRIBE OTHER ARRANGEMENTS FOR AVOIDING ANY POTENTIAL CONFLICTS OF INTEREST.

No.

37. IF APPLICABLE, ATTACH THE LAST THREE YEARS OF ANNUAL FINANCIAL DISCLOSURE FORMS YOU HAVE BEEN REQUIRED TO FILE WITH YOUR AGENCY, DEPARTMENT, OR BRANCH OF GOVERNMENT.

See Attachment 3.

PART E - ETHICAL MATTERS

38. HAVE YOU EVER BEEN THE SUBJECT OF A DISCIPLINARY PROCEEDING OR CITED FOR A BREACH OF ETHICS OR UNPROFESSIONAL CONDUCT BY, OR BEEN THE SUBJECT OF A COMPLAINT TO, ANY COURT, ADMINISTRATIVE AGENCY, PROFESSIONAL ASSOCIATION, DISCIPLINARY COMMITTEE OR OTHER PROFESSIONAL GROUP? IF SO, PROVIDE DETAILS.

No.

39. HAVE YOU EVER BEEN INVESTIGATED, HELD, ARRESTED, OR CHARGED BY ANY FEDERAL, STATE OR OTHER LAW ENFORCEMENT AUTHORITY FOR VIOLATION OF ANY FEDERAL STATE, COUNTY, OR MUNICIPAL LAW, REGULATION, OR ORDINANCE, OTHER THAN A MINOR TRAFFIC OFFENSE, OR NAMED AS A DEFENDANT OR OTHERWISE IN ANY INDICTMENT OR INFORMATION RELATING TO SUCH VIOLATION? IF SO, PROVIDE DETAILS.

No.

40. HAVE YOU EVER BEEN CONVICTED OF OR ENTERED A PLEA OF GUILTY OR NOLO CONTENDERE TO ANY CRIMINAL VIOLATION OTHER THAN A MINOR TRAFFIC OFFENSE? IF SO, PROVIDE DETAILS.

No.

41. ARE YOU PRESENTLY OR HAVE YOU EVER BEEN A PARTY IN INTEREST IN ANY ADMINISTRATIVE AGENCY PROCEEDING OR CIVIL LITIGATION? IF SO, PLEASE PROVIDE DETAILS.

No.

42. HAVE YOU BEEN INTERVIEWED OR ASKED TO SUPPLY ANY INFORMATION AS A WITNESS OR OTHERWISE IN CONNECTION WITH ANY CONGRESSIONAL INVESTIGATION, FEDERAL OR STATE AGENCY PROCEEDING, GRAND JURY INVESTIGATION, OR CRIMINAL OR CIVIL LITIGATION IN THE PAST TEN YEARS? IF SO, PROVIDE DETAILS.

Yes. I appeared as a witness for the United States in the Superior Court of the District of Columbia at three criminal trials. I was asked at these trials to testify about a car I noticed one evening in the alley behind my residence when I lived in the District of Columbia. The car was apparently used as the getaway car in an armed robbery that took place on the street in front of my residence.

I spoke to the Federal Bureau of Investigation as part of a routine meeting concerning document production related to the Wilson inquiry.

Also, as an attorney in practice, I have furnished information in civil litigation matters on behalf of clients.

43. HAS ANY BUSINESS OF WHICH YOU ARE OR WERE AN OFFICER, DIRECTOR OR PARTNER BEEN A PARTY TO ANY ADMINISTRATIVE AGENCY PROCEEDING OR CRIMINAL OR CIVIL LITIGATION RELEVANT TO THE POSITION TO WHICH YOU HAVE BEEN NOMINATED? IF SO, PROVIDE DETAILS. (WITH RESPECT TO A BUSINESS OF WHICH YOU ARE OR WERE AN OFFICER, YOU NEED ONLY CONSIDER PROCEEDINGS AND LITIGATION THAT OCCURRED WHILE YOU WERE AN OFFICER OF THAT BUSINESS.)

No.

PART F - SECURITY INFORMATION

44. HAVE YOU EVER BEEN DENIED ANY SECURITY CLEARANCE OR ACCESS TO CLASSIFIED INFORMATION FOR ANY REASON? IF YES, PLEASE EXPLAIN IN DETAIL.

No.

45. HAVE YOU BEEN REQUIRED TO TAKE A POLYGRAPH EXAMINATION FOR ANY SECURITY CLEARANCE OR ACCESS TO CLASSIFIED INFORMATION? IF YES, PLEASE EXPLAIN.

Yes. I was employed by the Federal Bureau of Investigation in 1988 and 1989 and took polygraphs in 1988 and 1989 to receive necessary security clearances for access to classified information.

46. HAVE YOU EVER REFUSED TO SUBMIT TO A POLYGRAPH EXAMINATION? IF YES, PLEASE EXPLAIN.

No.

PART G - ADDITIONAL INFORMATION

47. DESCRIBE IN YOUR OWN WORDS THE CONCEPT OF CONGRESSIONAL OVERSIGHT OF U.S. INTELLIGENCE ACTIVITIES. IN PARTICULAR, CHARACTERIZE WHAT YOU BELIEVE TO BE THE OBLIGATIONS OF THE DIRECTOR OF NATIONAL INTELLIGENCE AND THE INTELLIGENCE COMMITTEES OF THE CONGRESS IN THE OVERSIGHT PROCESS.

Congressional oversight of U.S. intelligence activities is critical to ensuring that the activities of the Intelligence Community enhance the national security. Congress provides the funds for the activities of the Intelligence Community and the Intelligence Reform and Terrorism Prevention Act of 2004 places significant responsibility and authority with the Director of National Intelligence for the funds for the national intelligence programs. Keeping Congress informed about the need for such funds, proposals for spending such funds, the priorities of the Intelligence Community, the threats facing the United States, and how such funds are expended is an important role of the Office of the Director of National Intelligence.

Congressional oversight is also important to ensure that legislation governing the Intelligence Community is both current and appropriately takes account of the need to protect the national security while protecting the constitutional and statutory rights of all Americans. Through hearings, reports, and briefings, Congress must be furnished with the information to allow it to consider necessary legislation to improve the performance of the Intelligence Community.

Congressional oversight also plays an important role in reviewing the activities of the Intelligence Community to ensure the appropriateness of operations. The notification procedures contained in applicable law help ensure the Congress is kept informed and can perform this critical function.

If confirmed, I look forward to working cooperatively with the congressional committees on these important matters.

AFFIRMATION

I, BENJAMIN A. POWELL, DO SWEAR THAT THE ANSWERS I HAVE PROVIDED TO THIS QUESTIONNAIRE ARE ACCURATE AND COMPLETE.

(Date) 7/11/2005 Benjamin A Powell
(Name)

(Notary)
Commission expires 1/31/2008
Sworn before me this 11th day of July, 2005

TO THE CHAIRMAN, SELECT COMMITTEE ON INTELLIGENCE:

In connection with my nomination to be General Counsel of the Office of the Director of National Intelligence, I hereby express my willingness to respond to requests to appear and testify before any duly constituted committee of the Senate.

Signature

Date: July 11, 2005

ATTACHMENT 1

Computers chem. Engng. Vol. 14, No. 4/5, pp. 561–572, 1990
Printed in Great Britain. All rights reserved

0098-1354/90 $3.00 + 0.00
Copyright © 1990 Pergamon Press plc

ADAPTIVE NETWORKS FOR FAULT DIAGNOSIS AND PROCESS CONTROL

L. H. UNGAR, B. A. POWELL and S. N. KAMENS
Departments of Chemical Engineering and Computer Science, University of Pennsylvania, Philadelphia, PA 19104, U.S.A.

(*Received* 23 *October* 1989; *received for publication* 15 *January* 1990)

Abstract—The use of adaptive (artificial neural) networks for fault diagnosis and process control is explored. Adaptive networks can be used as fault recognition systems, as adaptive nonlinear process models, and as controllers. Connection strengths representing correlations between inputs (alarms and sensor measurements) and outputs (faults, future sensor measurements or control actions) are learned using the LMS (Widrow-Hoff) rule and the backpropagation algorithm. The resulting system is a pattern recognizer which is able to learn nonlinear and logical relationships as well as linear correlations. Results are presented for two problems: diagnosing failures in a small model chemical plant, and controlling a highly nonlinear bioreactor. For the diagnosis problem, learning in adaptive networks given qualitative (alarm) and quantitative (sensor) data are compared, and the effect of noise is studied. The importance of nonlinear networks is demonstrated using simple problems which require context sensitivity and problems where optimal alarm thresholds are learned. Results using an adaptive model-based controller using two neural networks (one for the model and one for the controller) are presented and extensions to the standard layered feedforward network are suggested which greatly increase the utility of neural networks for process control.

1. INTRODUCTION

The control of processes in the face of process disturbances, upsets or malfunctions can be viewed as a pattern association problem in which one wishes to recognize disturbances or equipment or sensor malfunctions and to determine the appropriate control response. Adaptive networks—often called neural, connectionist or parallel distributed processing networks—provide a flexible mechanism for learning to recognize disturbances, faults, plant behaviors and promising control actions from observed patterns of sensor and alarm readings. Adaptive networks admit a dual interpretation: they learn associations between discrete events (e.g. alarms and faults) and they learn qualitative relationships (e.g. they identify plant models or learn control laws).

Adaptive networks have proven useful as pattern associators. They are being used for signal processing in applications such as understanding spoken speech (Sejnowksi and Rosenberg, 1987; Watrous and Shastri, 1986) and recognizing written characters, and they have been extensively tested in complex pattern recognition problems such as learning regularities in English (McClelland *et al.*, 1986; Elman and Zipser, 1987). The usefulness of adaptive networks in learning noise and echo cancellation as well as learning models and inverse models has been pointed out (Widrow and Winter, 1988). They are well-suited to learn and retrieve correlations between patterns such as measurements and faults or responses, and are particularly useful when the measurements are incomplete or inaccurate.

This paper looks at the application of adaptive networks to fault detection and adaptive control. Adaptive networks fit well into the current adaptive control techniques, often giving well-known algorithms in the limit where linear networks are used. The network-based approach does, however, suggest a variety of new equational forms, algorithms and applications. In the following sections, we demonstrate some of these potential benefits. Very simple examples are used in order to provide as much understanding as possible into how the networks function.

Before plunging into the details of network architectures and learning mechanisms, it is worthwhile looking briefly at some of the shortcomings of current approaches to fault diagnosis and control. A variety of statistical techniques and expert systems have been developed for fault detection and sensor validation (Isermann, 1984; Romagnoli and Stephanopoulos, 1980; Rich and Venkatasubramanian, 1987). These techniques are good for the tasks they are programmed for (e.g. checking mass balances), but are generally unable to learn to recognize recurring patterns, such as noting that a certain set of sensor readings indicates a flooded column or that a particular reponse only works well at high flow rates. Adaptive controllers, which come closer to the spirit of this work, adjust parameters in linear process models, but do not learn explicit relationships between symptoms, faults and control actions (Astrom, 1987). Human experts learn which minor symptoms first indicate recurring faults, and become better at taking prompt corrective action. The adaptive

networks described below give computers some of the same capability. Because they must be trained on observed data, adaptive networks are most useful for fault diagnosis in two contexts: (1) as a basis for process control for frequently repeated minor disturbances and malfunctions; and (2) for fault detection problems in which one is able to generate (e.g. by simulation) an exhaustive set of faults and symptoms. Quality control of complex processes, where a good model of the process is not available, is a particularly appropriate task.

Diagnosis and control are often treated as very different problems having a purely qualitative or quantitative nature, respectively. For example, a major weakness of most current diagnostic systems based on expert systems or artificial intelligence techniques is that they can only handle problems that can be described by Boolean combinations of qualitative values such as "high" and "low" (Rich and Venkatasubramanian, 1988). Definitions of the threshold values at which "high" and "low" start must be entered by hand. Work using fault trees and signed diagraphs (Lapp and Powers, 1977; Umeda *et al.*, 1980; Kokawa *et al.*, 1983; Oyeleye and Kramer, 1988) share this weakness. Systems based on adaptive networks lend themselves naturally to incorporating the more quantitative relations which are necessary in many fault diagnosis and control problems, particularly those which deal with products that are slightly off specification.

Adaptive control has taken an approach opposite to that of fault diagnosis. In model-based adaptive control, it is assumed that the process can be accurately described by a known set of (typically linear) equations. Parameters in these equations are fit to the data from the plant. When the form of the equations governing the plant are known reasonably accurately, and when there is no need for complex pattern recognition (e.g. recognizing from the start of a disturbance when the rest of the disturbance is likely to be so that appropriate action can be taken), current adaptive controllers work well. However, when the appropriate functional form is not known or recurring disturbance patterns must be recognized, adaptive networks have much to offer.

The ability to flexibly combine logical relationships such as are expressed by a fault tree with nonlinear quantitative relationships is powerful, and the concept of a system which "can learn anything" is attractive. Ever since their invention, strong claims have been made of adaptive networks (Rosenblatt, 1958; Rumelhart *et al.*, 1986) and strong responses have been made describing their limitations (Minksy and Papert, 1969). In this article we try to show how adaptive networks are useful for fault recognition and control problems, and to clarify what is and is not novel about them. Particular attention is given to the importance of using nonlinear networks.

Most of the work using adaptive networks—like most of the work in adaptive control—has been done using linear models, in which outputs vary linearly with inputs (Minsky and Papert, 1969; Gallant, 1988). Linear networks are, not surprisingly, much easier to build and analyze than nonlinear networks. Linear adaptive networks can incorporate observed frequencies of occurrences of faults and costs of false diagnosis and have been shown under certain moderately restrictive conditions to give the same diagnosis as optimal Baysean techniques (Gallant, 1987). Linear networks for control can be used in a form identical to IMC (Bhat and McAvoy, 1990). However, linear networks are unable to solve a significant body of problems. Many of these arise in diagnosis problems when quantitative sensor readings are used, rather than the qualitative high/normal/low readings of alarms. Quantitative readings can allow disturbances to be recognized before they becomes serious, and are essential in many quality control problems. Nonlinear adaptive networks can represent both qualitative models and logical relations, and so can be viewed as a generalization of linear adaptive control and statistical methods to nonlinear systems. Thus nonlinear networks are crucial for many of the applications to which adaptive networks are best suited.

The following section describes adaptive networks in more detail. Sections 3 and 4 then show several small examples of the use of adaptive networks for fault diagnosis and adaptive control, demonstrate the importance of nonlinear networks, and suggest some of the extensions that should ultimately allow adaptive networks to make a major contribution to adaptive control. Sections 5 and 6 conclude by describing some of the shortcomings of current adaptive networks.

2. ADAPTIVE NETWORK STRUCTURE AND LEARNING ALGORITHM

Adaptive networks include a broad class of computing architectures and algorithms, all roughly inspired by biological networks in which large number of relatively simple independent processors (neurons) are connected by links (dendrites and synapses). Learning occurs by changing the strengths of the connections on the links. We consider the most widely used form of adaptive network: a layered feedforward network (see Fig. 1). The input nodes, which receive their inputs from alarms or sensors (generally after preliminary filtering and smoothing), are connected via a set of intermediate or "hidden" nodes to the output nodes, which give diagnoses of the fault, predictions of future plant behavior or recommendations for changes in process control set points. The hidden nodes are functions of the observed variables, but typically do not have clear physical interpretations.

Each node j takes as inputs the products of the outputs of the nodes i connected to it and the weights of the links w_{ji} between the pairs of nodes. The node

then produces an output which, depending on the exact scheme used, approximates unity if the sum of these inputs is greater than a threshold value, or zero if the sum is less than threshold. (We use a sigmoidal function; see Fig. 2.) The output from any node may be intput to another node. The output of each node depends only on its inputs and its threshold, and thus each node can be considered a separate processor operating in parallel with the other nodes. Learning consists in determining values for the weights and thresholds which lead to optimal associations between the inputs and outputs.

A number of different adaptive networks structures and learning mechanisms have been proposed, including the Boltzmann machine and variants such as harmony theory, which are modeled on thermodynamics and information theory [Ackley *et al.*, 1985; Smolensky 1986; see Venkatasubramanian (1985) for an early application to fault diagnosis], and many different networks growing out of early work on Perceptrons (Rosenblatt, 1958) and Adelines (Widrow and Winter, 1988), most notably an approach called parallel distributed processing (PDP) (Rumelhart *et al.*, 1986). There is also extensive work which attempts to model the brain more closely. See the proceedings of the International Neural Network Society (INNS) or the IEEE Neural Net Conference for papers on all aspects of neural networks. The learning mechanisms used by the parallel distributed processing group are simple, learn relatively quickly, and have produced the most impressive results to date, and so are used in this work. The remainder of this section describes the LMS (actually the generalized delta-rule) and back-propagation algorithm which we use to learn weights and thresholds. Those familiar with Rumelhart *et al.* (1986) or similar descriptions (Lippman, 1987) may proceed directly to Section 3.

From an engineering standpoint, adaptive networks can be viewed as mappings from inputs i_k to outputs o_i:

$$o_i = f(i_k; w_{k_i}). \tag{1}$$

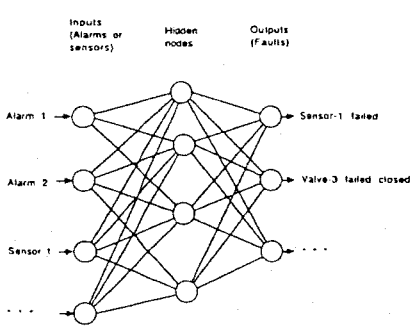

Fig. 1. Feedforward layered adaptive network.

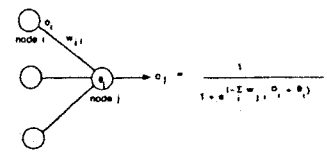

Fig. 2. Single node with output a sigmoidal function of the combined inputs.

The inputs are typically the current state of the plant (as measured by some combination of sensors and alarms). The outputs can then be the next state of the plant, a diagnosis or a control action, depending on whether the network is serving as a system model, a fault detector or a controller, respectively. These mappings contain a number of parameters w_{k_i} (called weights in adaptive networks). The network is "trained" by presenting it sets of input/output pairs and adjusting the weights ("learning"), typically using an algorithm which minimizes the value of an error signal representing the difference between the actual outputs o_i and a set of target output values t_i:

$$E = \sum_i \sum_p (o_{ip} - t_{ip})^2, \tag{2}$$

where the index p respresents the different input/output pairs presented. For the case that the network is learning a model of the plant this learning of parameters is, of course, system identification.

Many different functional forms can be used. In the simplest case, that of a linear network, the output is simply:

$$o_i = f(i_k; w_{k_i}) = \sum_k w_{k_i} i_k. \tag{3}$$

In this case, the LMS learning algorithm (to be described below) performs multiple linear regression, fitting the parameters w_{k_i} to predict the outputs as accurately as possible.

Many different nonlinear functions can be used, but the most common is for the output of each node j to be given by:

$$o_i = f\left(\sum_k w_{k_i} i_k\right), \tag{4}$$

with $f(x)$ given by the sigmoidal function:

$$f(x) = 1/(1 - e^{-(x-\theta_j)}). \tag{5}$$

This function is a continuous sigmoidal function which approximates a Heaviside step function with the step at the threshold cutoff θ_j. By using a continuous function rather than a step function, one can find the derivative of the output with respect to the weights, and thus determine the optimal direction in which to change the weights to produce a desired output. By using multiple layer networks in which nodes at each layer output this sigmoidal function of their total input, arbitrary functional forms can be represented (Lippman, 1987). It is also possible to use

other functional forms besides the sigmoidal. For example, sines or cosines are useful for capturing periodicity.

Learning occurs by comparing the actual output with the target output (e.g. the diagnosis, plant behavior or control action that is known to be correct). The weights between the layers are successively adjusted so as to bring the output closer to the target output. To do this without destroying other patterns that are stored in the network, changes to the weights are made gradually using gradient descent:

$$\Delta w_{kj} = \eta \, dE/dw_{kj}. \tag{6}$$

For the layered network this can be implemented so that all calculations are done locally at a node. Additional speed can be gained by adding a "momentum" term which is a constant α times the previous weight change. Using the chain rule on equation (2) this gives the so-called generalized delta rule:

$$\Delta w_{ji}^{(n+1)} = \eta \delta_j o_i + \alpha \, \Delta w_{ji}^{(n)}, \tag{7}$$

where the error signal for output nodes, δ_j, is proportional to the difference between the actual output o_j and the target output t_j and is given by:

$$\delta_j = (t_j - o_j) o_j (1 - o_j) \tag{8}$$

and the error signal for hidden nodes is a weighted sum of the errors from the nodes that receive the output of the hidden node:

$$\delta_j = o_j (1 - o_j) \sum_k \delta_k w_{kj}. \tag{9}$$

Thus the error at a node is partly due to the weights of the links feeding into the node and partly due to the errors in the outputs of the nodes feeding into the links.

In the runs presented below, a learning rate of $\eta = 0.5$ was used with $\alpha = 0.3$ carrying forward 30% of the past error to the subsequent iteration. In the above learning scheme, weights which most strongly influence the output are changed the most. For a more complete description, see Chap. 8 of Rumelhart *et al.* (1986). For a description of some disadvantages of gradient descent see Sutton (1986).

The above algorithm is designed for use on a parallel machine; for standard serial computers, techniques such as Newton's method and conjugate gradient methods can be used on a set of equations which governs all of the weights. For example, the BFGS method gives identical results with orders of magnitude less computer time (Watrous, 1987). The results presented below do not depend on the particular algorithm used.

Given the fact that artificial neural networks are "only" parameter fitting with a particular equation set and that gradient descent is by no means the fastest or most efficient method of obtaining these parameters, one might well ask "Why use neural networks?" The answer lies in the properties of the equational forms arising from adaptive networks. For linear networks there is no advantage over linear regression except the potential to use massively parallel computers (where each node/neuron is an independent processor). The use of large numbers of parameters gives neural networks their strength as pattern recognizers, but regression with many parameters gives the same effect. The real benefit of adaptive networks comes when nonlinear networks are used. As is described in the following sections, neural networks tend to develop "feature detectors" which determine which combinations of the input variables are most important. The use of nodes with thresholds encourages interpretation in terms of discriminant functions in which discrete answers (e.g. faults) are selected from quantitative values. (We look below at the simple case of determining alarm thresholds.) More advanced architectures such as recurrent networks provide novel equation forms which "remember" relevant past data.

3. ADAPTIVE NETWORKS FOR FAULT DETECTION

A set of faults and alarms corresponding to the operation of a simple stirred tank reactor was used to test learning of fault diagnoses. As can be seen in Fig. 3, the reactor has two feedstreams. It is taken to be exothermic and requires cooling. Note that we assume that sensors and controllers can fail as well as other equipment. A list of the faults considered and the associated sensor readings appears in Table 1. As it is specified, the system has 12 possible faults and an all normal state, which are diagnosed using six sensor readings. Since most of the sensors can take on values of low, normal and high, in the case of diagnosis using alarms this leads to 11 inputs to the

Table 1

FA	FB	Level	Temperature	Output	C	
00	00	00	00	00	0	Everything normal
00	00	10	00	01	0	Output pump fails
00	00	00	10	00	1	Cooling water pump fails
00	00	00	01	00	1	Cooling water value fails open
01	00	00	01	01	1	Value A fails closed
01	00	00	10	10	1	Flow sensor A fails low
10	00	00	01	01	1	Flow sensor A fails high
10	00	00	10	10	1	Valve A fails open
00	00	01	00	10	0	Outlet value fails open
00	10	00	01	10	1	Valve B fails open
00	01	00	10	01	1	Valve B fails closed
00	01	00	01	10	1	Flow sensor B fails low
00	10	00	10	01	1	Flow sensor B fails high

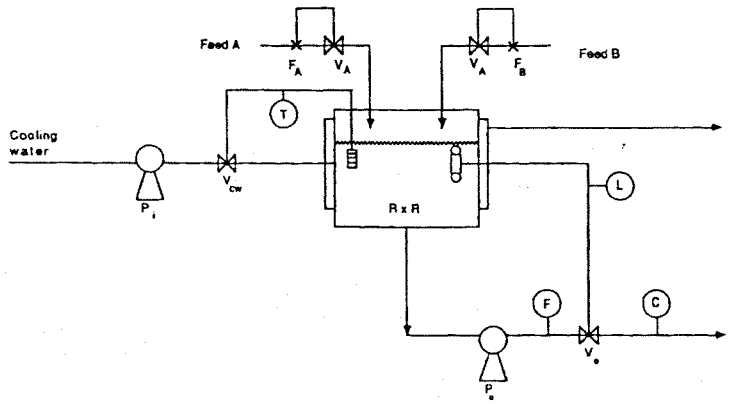

Fig. 3. Schematic of reactor used to test fault detection.

network. No transient data were considered (but see Section 4).

3.1. *Fault diagnosis example*

This section describes the training procedure and shows some simple examples of the use of linear adaptive networks. Each network was trained using a set of pairs of inputs (alarm or sensor readings) and outputs (faults). Alarm readings were represented as an input of "1" for alarm state and "0" for no alarm. Process variables which could be either low, normal or high were represented by pairs of inputs as (01), (00) or (10), respectively. This is equivalent to having two alarms: a high alarm and a low alarm. Quantitative sensor readings were normalized to lie on the region (0, 1) where 0 corresponds to the minimum possible reading and 1 the maximum. Raw sensor data can be handled, but can greatly slow learning. For some trials, noise was introduced to the simulated sensor readings. In these cases, the sensor data presented to the network were generated to be normally distributed with specified mean and standard deviation for each reading. Uniformly distributed readings on specified intervals produced similar results. In all examples shown in this section, outputs were taken to be Boolean, but quantitative outputs are handled similarly.

The adaptive network was trained in each case by multiple presentations of a training set of all sensor reading/fault groups to be learned. For the case of noisy inputs, each presentation of the training set was different, but all shared the same mean and standard deviation. The system is initialized by giving the weights small random values. Each symptom–fault pair in the training set is then presented to the network, and the weights are updated using the algorithm presented in the preceding section. The training set is shown repeatedly to the network; each such showing is termed an iteration. Hundreds or thousands of iterations are often required for convergence using the back propagation algorithm, depending on the difficulty of the problem. This, of course, does does not mean that thousands of different examples must be provided. If a database of historic events is maintained, events which are only observed once in the real world can be shown repeatedly to the network. All runs presented in this section were made on a Symbolics Lisp machine using a simulator developed at Carnegie-Mellon University (Hinton *et al.*, 1987). With Boolean (alarm) inputs, the system converges to within 0.03 of the specified output for the Boolean reactor diagnosis problem (using alarms as inputs) in approx. 1700 iterations. Using a "winner take all" criterion in which the highest output is selected as the fault leads to flawless prediction in much fewer iterations. An error criterion of 0.5 only takes less than 100 iterations; since the outputs are all zero or one, this is entirely adequate.

A corresponding quantitative problem corresponding to diagnosis from sensor readings was generated by using input values of 0.7 for high, 0.5 for normal and 0.3 for low. As will be discussed in detail below, attempts to learn this problem using a linear network fail.

The operation of adaptive networks and their failures and successes are best explained by looking at very simple problems. To see why the reactor diagnosis problem with quantitative inputs requires nonlinear networks let us start with a very simple network. A trivial linear network which recognizes that fault F1 is present if alarm A1 is on and that fault F2 is present if alarm A2 is on is shown in Fig. 4. (Weights are shown on links, while threshold values are written inside the circles representing nodes.) If a single sensor S1 is used as input instead of the alarms, the network of one input and two output nodes (each

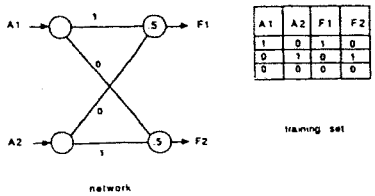

A1	A2	F1	F2
1	0	1	0
0	1	0	1
0	0	0	0

Fig. 4. Linear network to distinguish faults F1 and F2 based on alarms A1 and A2.

with a single input and a sigmoidal output function) shown in Fig. 5 results. Different solutions may be reached depending on the random initial weights; all have a similar form for this problem. It can be seen that the nodes are acting as thresholding devices, discriminating between alarm and normal states. Optimal thresholds are thus automatically determined as part of the learning procedure. For this simple problem, the bottom node gives an output that rapidly changes from 0 to 1 when S1 surpasses 0.6 while the top node fires if S1 is below (roughly) 0.4. Similar results are obtained when noise is added to the sensor reading or when the sensors and faults are part of a larger network. In particular, in more complex nonlinear networks the thresholding is done in the first layer, and then the results are combined and "interpreted" in subsequent layers.

Sensor data contain more information than alarm data and so, as one might expect, more accurate diagnoses can be made with sensor data. Some of the advantages are obvious and can be obtained with linear networks; others are context dependent and require nonlinear nets. A trivial example with two sensors both indicating a single fault, shown in Fig. 6, demonstrates the advantages of using sensor data rather than alarms. If either or both of the sensors are high, the fault is present. (If both being present implies no fault, a nonlinear net must be used; see Section 3.2.) Using qualitative inputs allows one to conclude that the fault is present even if both sensors are slightly below the usual alarm thresholds. In fact, for a linear network this is unavoidable, although nonlinear networks can learn either: (1) that both sensors near the threshold indicates a fault; or (2) that exactly one of the sensors must actually be above the threshold.

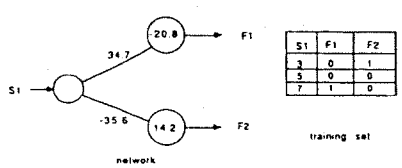

S1	F1	F2
3	0	1
5	0	0
7	1	0

Fig. 5. Network which determines alarm thresholds for different faults based on sensor S1.

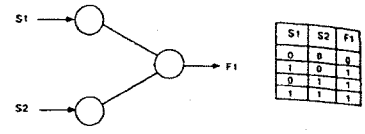

S1	S2	F1
0	0	0
1	0	1
0	1	1
1	1	1

Fig. 6. Network structure for two sensors being used to diagnose a single fault.

3.2. *The importance of nonlinear networks for diagnosis*

Linear networks have been shown to be capable of learning to diagnose faults in a variety of circumstances, including the noisy single Boolean fault problem (Gallant, 1987) and using noisy quantitative inputs. When, then, does one require nonlinear networks with hidden units? An obvious answer is "any time one needs to learn a nonlinear model of the plant" or "any time a multiple linear regression will fail to give accurate predictions", but other answers exist based on context dependence.

Situations arise in which a single observation provides no information; to change one's assessment of the likelihood of a given event having occurred, one must look at two readings simultaneously. A simple example occurs in looking at two flow meters on the same pipe to determine if the readings are to be believed or not (i.e. whether a sensor has failed). Assuming for brevity that only "high" and "low" readings are possible, the sensor readings, and their interpretations are shown in Table 2.

Observing, for example, that S1 is high gives no information as to the accuracy of the reading. The same is true for the other readings. The input–output table given above is isomorphic with the exclusive or (XOR). Linear networks cannot learn the XOR problem because they calculate correlations between single inputs and single outputs; in the XOR, there are only higher order correlations. Problems such as the XOR, in which one reading can only be interpreted in light of other readings are fairly common. Asking if all readings are the same (as in parity checking) is a special case of checking mass and energy balances.

When quantitative inputs are used instead of alarms, hidden units may also be required. Consider the simple case where we wish to determine whether a measurement indicates that there is a problem. A reading of 0.5 will be taken as normal, while readings of 0.3 or 0.7 will be considered indicative of a malfunction. A linear system cannot capture this dependence; a two-layered network is required in which the first layer contains nodes which compare the reading

Table 2

Sensor 1	Sensor 2	Believe the reading?
High	High	Yes
High	Low	No
Low	High	No
Low	Low	Yes

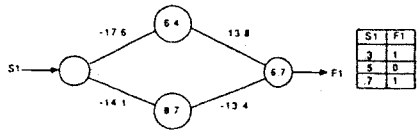

Fig. 7. Multilayer network for distinguishing "fault" from "no fault" for sensor S1. The first layer, containing nodes 1 and 2 serves as a thresholding device.

to 0.3 and to 0.7 (i.e. perform the thresholding as in Fig. 5) and the second layer combines and interprets the outputs of these nodes.

Experiments confirm this interpretation. A network consisting of a single node never succeeds in learning the input/output table:

Input	Output
0.3	1
0.5	0
0.7	1

This pattern is contained in the quantitative version of the fault diagnosis problem presented in Section 3.1, and explains why a linear network fails to learn it. When the same pattern was presented in a two-layer network as shown in Fig. 7, success was always obtained.

The interpretation of this network is precisely as given above; the first nodes determine the appropriate thresholds, and the second node combines the thresholds to give the desired output. Table 3 shows the outputs of the hidden nodes, which can be seen to have a thresholding function: node-1 fires on inputs below 0.5, while node-2 fires on inputs below 0.7. In an actual plant, the simple situations requiring hidden nodes described above will, of course, be embedded in a much larger network.

Fault detection with quantitative inputs was tested by modifying the system shown in Fig. 3 and given in Table 1 to have quantitative inputs. A training set for this problem is given in Table 4. A network was used with a layer of eight hidden nodes. The system learned to recognize all the faults. Adding Gaussian noise with a standard deviations of 0.15 to the sensor readings did not significantly effect learning speed.

We have found that adaptive networks are generally able to diagnose multiple simultaneous faults but, as would be expected, can fail to reach diagnoses when faults interact. We have also investigated the effect of adding and removing links and nodes. The network's performance is not unduly sensitive to the number of nodes, the number of layers or the network structure chosen as long as sufficient hidden nodes are available to represent the solution. The network simply does not use extra nodes (Rumelhart *et al.*, 1986). Perhaps surprisingly, removing links does not speed learning, but rather slows it by removing the simultaneous learning of different interactions (Ungar and Powell, 1988).

Table 3

Input	Node-1 output	Node-2 output	Network output
0.3	0.755	0.99	0.98
0.5	0.08	0.84	0.03
0.7	0.00	0.23	0.97

4. ADAPTIVE NETWORKS FOR CONTROL

Given that adaptive control and neural networks stem from the same historical roots, surprisingly little work has been done until the past year using networks for adaptive control. Although many research groups are starting to explore the use of adaptive networks for process control, virtually no results are publicly available for chemical process control applications. Robotics applications have a longer history (Barto *et al.*, 1983; Anderson, 1987) and are more advanced (Guez *et al.*, 1988; Kawato *et al.*, 1988; Miller and Hewes, 1988; Psaltis *et al.*, 1988). Bhat and McAvoy (1990) have suggested using adaptive networks for ARMA and IMC-type controllers.

We use a model-based control architecture which has been used for robotic control (Jordan, 1988) in which two networks are used; one which learns a model of the plant, and a second network which learns control laws (see Fig. 8). This approach has many advantages: by explicitly learning a forward model, one avoids the difficulties which arise in trying to learn inverse models for noninvertable systems (e.g. those with process delays). The approach also allows the incorporation of very general constraints and the incorporation of criteria for promoting smooth ("bumpless") control actions (Jordan, 1988).

The model of the plant is learned by the usual training method using current and past sensor readings and control actions as inputs to the net and

Table 4

FA	FB	Level	Temperature	Output	C	
0.5	0.5	0.5	0.5	0.5	0.5	Everything normal
0.5	0.5	0.7	0.5	0.3	0.5	Output pump fails
0.5	0.5	0.5	0.7	0.5	0.7	Cooling water pump fails
0.5	0.5	0.5	0.3	0.5	0.7	Cooling water value fails open
0.3	0.5	0.5	0.3	0.3	0.7	Value A fails closed
0.3	0.5	0.5	0.7	0.7	0.7	Flow sensor A fails low
0.7	0.5	0.5	0.3	0.3	0.7	Flow sensor A fails high
0.7	0.5	0.5	0.7	0.7	0.7	Valve A fails open
0.5	0.5	0.3	0.5	0.7	0.5	Outlet value fails open
0.5	0.7	0.5	0.3	0.7	0.7	Valve B fails open
0.5	0.3	0.5	0.7	0.3	0.7	Valve B fails closed
0.5	0.3	0.5	0.3	0.7	0.7	Flow sensor B fails low
0.5	0.7	0.5	0.7	0.3	0.7	Flow sensor B fails high

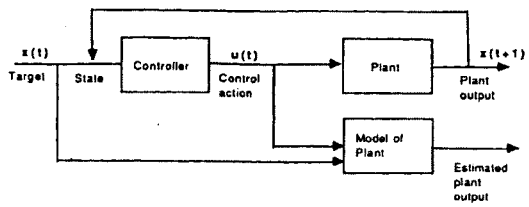

Fig. 8. Adaptive network-based control architecture. Both the plant model and the controller are adaptive networks.

future sensor readings as target outputs, but the controller requires slightly different training. The controller must be trained to produce the correct control action when it is given the current state of the plant. However, the correct control action is typically not known *a priori*. To find it, the error in the output of the plant (the difference between the plant outputs predicted by the model and the desired output values) is backpropagated to the inputs to the model. The same algorithm (described in Section 2) which is used for learning the model is also used here. The "error" ascribed to the control action by the backpropagation algorithm [equation (9)] is precisely the desired correction to the control action which should be learned by the controller network. The adaptive controller thus performs a gradient search in the control laws, learning to move in the direction which moves the plant outputs towards their target values.

4.1. *Example control problem*

The proposed architecture was tested using a model problem of a bioreactor consisting of a continuous-flow stirred tank reactor (CFSTR) in which cell growth depends only on the nutrient being fed to the system. A basic set of equations for such a bioreactor (Agrawal *et al.*, 1982) is:

$$\frac{dC_1}{dt} = -C_1 + Da\, C_1(1 - C_2)e^{C_2},$$

$$\frac{dC_2}{dt} = -C_2 + Da\, C_1(1 - C_2)e^{C_2}\frac{1+\beta}{1+\beta-C_2},$$

where C_1 and C_2 are, respectively, dimensionless cell mass and substrate conversion, and the control parameter Da varies inversely with the flow rate through the reactor. More precisely, C_2 is defined as $(S_F - S)/S_F$, where S_F is the concentration of substrate (nutrient) in the feed to the reactor and S is the concentration of substrate in the reactor, and Da is the ratio of growth rate to residence time. The constants in the model, β and γ, determine the rate of cell growth and nutrient consumption rates. This equational form implies that cells grow fastest at intermediate substrate concentrations and slower at very high or low concentrations. The target value to be controlled is the cell mass yield (C_1 for this problem), but it can also be the cumulative production over time. This is not a completely realistic model of any bioreactor, but provides a highly nonlinear and challenging test problem (Agrawal *et al.*, 1982; Brengel and Seider, 1989).

The dual network controller described above was used to control a simulation of this bioreactor with the parameters $\gamma = 0.48$, $\beta = 0.02$. The adaptive network can, in fact, learn the plant model and the control actions required to maintain a target steady state. The model network was trained by giving it plant inputs (concentrations and a control action) and the resulting outputs when the reactor was subjected to concentrations and flow rates distributed uniformly on the entire range 0–1. The extreme nonlinearity of the governing equations makes learning the model quite difficult. A model with three inputs (C_1, C_2 and Da), two outputs and two hidden layers of five units each learns to predict the output variables (C_1 and C_2 at the next time step) with a combined mean square relative error of about 4%. This accuracy compares with an error of 42% for a linear model.

Once an accurate model has been learned, the controller can be trained very rapidly. We have investigated control using the architecture shown in Fig. 8 under the assumption that C_1 and C_2 can be measured, and under the weaker assumption that one only knows some cost measure which is to be minimized. The latter case is an example of reinforcement learning (see the next section). The results in both cases are similar. For example, when the controller is tested on target values of $C_1 = 0.113$ and $C_2 = 0.8902$ with the sum of the absolute values of the differences between the concentrations and their target values as the cost, the above network (with two sets of five hidden nodes) produces output concentrations of 0.1224 and 0.8778. The discrepancy between the target and actual values comes from inaccuracies in the model. The quality of control depends critically on having an accurate model. Assuming that the correct equational form is known and using nonadaptive control schemes, small errors in the parameters have been shown to give rise to very inaccurate control: an error of 2% in γ or 20% in β leads to a 50% error in the target cell mass (Brengel and Seider, 1989). Note that these tests assume (unrealistically) that there is no noise in the measurements (e.g. of C_1) and that Da actually takes on the exact value that the controller requires.

Introducing noise to the system by making the actual flow rate differ from the prescribed flow rate by an (unmeasured) difference of up to 5%, we found that the control was still stable. However, when an inaccurate model is used, oscillations in the control signal result. The same controller should work well for changes in set point, but we have not yet tested this.

The above results present only the first step toward adaptive network-based control. For good control of complex processes, controllers and models which incorporate past readings and use multistep predictors—or their equivalent—will be required. Using a second network to learn the control response has the advantage of very fast performance once the controller is learned, but there is a substantial learning time required to explore the alternative control actions. Learning both model and controller accurately can take over a hundred-thousand iterations (with most of the time spent learning the model). One would not want to train this system online! Different uses of adaptive networks also need to be explored. For example, either of the networks in the controller we used could have been replaced with a nonadaptive component. Controllers based on adaptive networks, of course, have all the advantages and problems that conventional controllers do. Convergence and stability can be important issues. Adaptive network-based controllers do, however, have the advantage of easily incorporating very general adaptive nonlinear models in place of adaptive linear models or nonadaptive nonlinear models.

4.2. *Extensions to adaptive networks for control*

Adaptive control is substantially different from fault analysis in the form of the feedback given to the network. In all of the fault diagnosis examples presented, the correct fault was given as part of the training set. In a control problem, the correct response is typically not given; the controller is given some measure of the goodness of the state of the system and must deduce or infer what the correct action was. This is called reinforcement learning in contrast to the more common "supervised learning" in which the correct (target) output is known. Reinforcement learning can be much more difficult than supervised learning because exploration is required to find the best response, quite apart from learning it. The situation can be even more complex: one often wants to maximize an anticipated sequence of reinforcements or, in process control terms, to optimize the integral of a performance measure over time.

We have tested the network and control problem described above on a simple version of reinforcement learning by providing the network as its only feedback the sum of the absolute values of the differences between the actual concentration and the target concentration. The correct control action to be learned is then found by gradient descent—i.e. the backpropagation algorithm is used to select a control action which reduces the "reinforcement" (error) signal. The controller is then given this signal as it target output. Note that very general reinforcement signals could be used, such as measures of profitability of the reactor over the period it was controlled.

Process control and fault diagnosis provide other challenges. They typically require analysis of time sequences of readings from multiple sensors. They often require consideration of the temporal order of events and sensor changes. When a single signal is being monitored, it is no problem to use the past 10 or 20 readings as a basis for adaptation and prediction (e.g. Widrow and Stearns, 1985, Chap. 11). For larger and more complex problems, inputting all relevant past data (using, for example, delay elements as is common in adaptive control), creates an intractably large problem. It is thus advantageous for the system to have some memory of past events and to be able to consider the sequential order of events. Adaptive networks can, like conventional controllers, be given past inputs and outputs, which provides a type of memory and some ability to capture un-measured state variables (Bhat and McAvoy, 1989).

However, several network architectures have been developed to facilitate learning about dynamic systems. A promising approach is *recurrent networks*, in which outputs of intermediate nodes at one time step are fed back into the network as inputs at the next time step (Rumelhart *et al.*, 1986; Elman, 1988; Jordan, 1988) (see Fig. 9). Recurrent networks allow the networks to selectively save information about the past without having to reason directly on the mass of unprocessed data. Traditional control methods treat past and current readings as equivalent, feeding

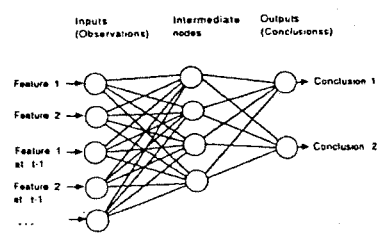

Fig. 9a. Conventional network with inputs which are current and past plant inputs and outputs (features are alarms or sensors).

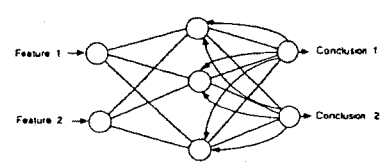

Fig. 9b. Recurrent network. Only current features are input. All links pointing from left to right have an implicit time delay.

all readings within a time window to the controller. Recurrent networks, in contrast, feed in the current readings, and use stored intermediate values from the past. They thus provide "historical context dependency". For example, the interpretation of a given signal may depend on the most recent nonzero reading of a second signal. The recurrent net can remember what the past reading was (in spite of arbitrary and variable delays) and suggest different responses to the current value of the first sensor.

4.3. *Temporal differences*

Learning in a control setting is very different from traditional statistical modeling in that one often only sees the effects of actions after some delay. In fact, one may have taken several actions before the full consequences of the actions become apparent, particularly when inverse response or intrinsically dynamic (e.g. batch or semi-batch) systems are involved. The problem of learning what the best actions are is very much like playing chess: if one waits until the end of each game to learn, one must play many games before learning anything. It is also very hard to tell which moves were good and which bad. One solution to this problem is to learn after each move using the following strategy. One makes a move, notes what one expects to happen, waits for the opponents response, and then reassesses the situation to see if the effect of the move was better or worse than expected. The assessment of the value of the move is then adjusted accordingly.

Temporal difference methods use this technique to update the model of the world or the control law (e.g. the weights in the adaptive network) based on changes in predictions of future behavior. Rather than predicting a state of the world several times steps in the future and then updating the model when that future time is reached, the model is continuously updated as the prediction changes over time. Because predictions should get better as the target time is approached, learning can occur incrementally, and more rapidly than if one waits for the prediction to actually be tested. A formula to do this is:

$$\Delta w_t = \alpha(P_{t+1} - P_t)\,\Delta_w P_t,$$

where w are the weights, P_t is the prediction at time t, α is a constant determining the learning rate, and $\Delta_w P_t$ is the vector of partial derivatives of P_t with respect to each component of w. (This is the same gradient computed by the backpropagation procedure in Section 2. The network outputs P_t and the next prediction P_{t+1} is used as the target value.) It has been shown, surprisingly, that the method of temporal differences is more efficient than traditional schemes such as the Widrow–Hoff rule; given the same data, temporal difference methods can produce more reliable and more accurate predictions (Sutton, 1988). Both recurrent networks and the method of temporal differences still need further study and testing, both in terms of their formal properties and their usefulness in real world control problems. We believe that much of the promise of adaptive networks is in such new algorithms and we are actively investigating these methods.

5. PROBLEMS AND LIMITATIONS OF ADAPTIVE NETWORKS

Adaptive networks have a number of limitations which still need to be addressed. Some of these are generic and minor, but some present potentially large stumbling blocks to their widespread use. These include slow learning, overly rapid forgetting and lack of first principles knowledge.

On serial machines, the speed of learning using the backpropagation algorithm is not impressive. The runs presented above typically required hundreds (for fault diagnosis) or tens of thousands (for learning quantitative models) of passes through the set of training examples. Worse, it has been shown (Minksy and Papert, 1969) that a variety of problems can require exponentially large numbers of neurons to obtain solutions. Although there are no comparable rigorous proofs for nonlinear networks, it appears that similar problems exist. Overcoming these limitations will require the use of structured networks that can use causal models of the plant (flowsheets and process and instrumentation diagrams) to focus reasoning.

Another serious limitation of adaptive networks is that they tend to forget seldom-seen patterns too rapidly (McCloskey and Cohen, 1988). Because the network "reallocates" nodes to where they are most useful, patterns which have not been seen in some time are forgotten. Such forgetting must be overcome in training by interspersing infrequent patterns that are to be remembered among the new ones. Thus, as adaptive networks currently function, one would probably not want to let them adapt online. The learning procedure must rather be thought of as an offline generation tool, which can be used to frequently update the network in the plant with the networks trained using training sets modified to include new plant data.

As typically used, adaptive networks try to learn the entire model of the plant. When one has an approximate model of the plant from first principles, this is clearly very inefficient. The adaptive network should only learn the mismatch between the model and the plant. This is not difficult to do, and should give both faster and more reliable control.

6. SUMMARY

Adaptive networks provide pattern recognition facilities which can be used and interpreted in several ways: they perform multiple nonlinear regression on input/output pairs (current sensor readings and alarms are associated with faults, future readings or control actions) that may be both quantitative and qualitative. Although adaptive networks have many

similarities with well-established statistical techniques for system identification, they still offer promise of major benefit, primarily in suggesting new equations, architectures and algorithms. Although the adaptive networks can be viewed as a special form of nonlinear regression, the network formalism suggests several powerful nonlinear functional forms to use. Use of highly interconnected nonlinear systems allows unexpected interactions to be captured. Recurrent networks can learn to recognize arbitrary delays. Temporal difference methods can speed learning when feedback is not immediate.

Artificial neural networks will not in any way replace control algorithms, but rather are good for learning that which we are ignorant of: alarm thresholds, patterns of disturbances and model-mismatch (including process delays). Adaptive networks can be thought of as a very data-intensive approach to system identification: many parameters are used in a format that allows interactions between all of the variables. Thus more specific patterns can be learned than when the system is described using a relatively simple equation with a small number of parameters. When the exact form of the equation is known or little data is available, an equation with fewer parameters is of course preferable and neural networks should be avoided.

We looked at two example problems: fault diagnosis and adaptive model-based control. Both quantitative (sensor) and qualitative (alarm) information can be used in fault diagnosis. Optimal thresholds for triggering alarms are learned; These can be dependent on the context provided by the states of other variables. Nonlinear networks are required for all but the simplest problems. In adaptive model-based control, a highly nonlinear model was learned without using *a priori* knowledge of the equational forms. This approach is expected to yield the most benefit in MIMO systems which contain complex nonlinear interactions and in systems in which recurring disturbances must be recognized and forecast.

Acknowledgements—Thanks to Geoff Hinton, David Plaut and Steven Nowlan at Carnegie Mellon University for supplying the source code to their adaptive network simulator, to Ron Katriel for his unflagging aid in deciphering and modifying the code, and to Venkat Venkatasubramanian for helpful discussions.

REFERENCES

Ackley D. H., G. E. Hinton and T. J. Sejnowski, A learning algorithm for Boltzmann machines. *Cognitive Sci.* **9**, 147–169 (1985).

Agrawal M. and D. E. Seborg, Self-tuning controllers for nonlinear systems. *Automatica* **23**, 209–214 (1987).

Agrawal P. *et al.*, Theoretical investigations of dynamic behavior of isothermal continuous stirred tank biological reactors. *Chem. Engng Sci.* **37**, 453 (1982).

Anderson C. W., Strategy learning with multilayer connectionist representations. *Proc. of the Fourth Int. Workshop on Machine Learning*, Irvine, Calif. (1987).

Andow P. K., Fault trees and failure analyses: discrete state representation problems. *Trans IChemE* **59**, 125–128 (1981).

Astrom K. J., Adaptive feedback control. *Proc. IEEE* **75**, 185–217 (1987).

Barto A. G., R. S. Sutton and C. W. Anderson, Neuronlike elements that can solve difficult learning control problems. *IEEE Trans. Systems, Man Cybernet.* **23**, 834–846 (1983).

Bhat M. and T. J. McAvoy, Use of neural nets for dynamic modeling and control of chemical process systems. *Computers chem. Engng* **14**, 573–582 (1990).

Brengel D. D. and W. D. Seider, A multi-step nonlinear predictive controller. (1989).

Elman J. L., Finding structure in time. UCSD CRL Report 8801 (1988).

Elman J. L. and D. Zipser, Learning the hidden structure of speech. Technical Report 8701, Institute for Cognitive Science, University of California at San Diego, La Jolla (1987).

Gallant S. I., Automated generation of connectionist expert systems for problems involving noise and redundancy. *AIAA Workshop on Uncertainty*, Seattle (1987).

Gallant S. I., Connectionist expert systems. *Commun. ACM* **31**, 2 (1988).

Goldberg K. and B. Pearlmutter, *Using Neural Networks to Learn the Dynamics of the CMU Direct-Drive Arm II*, p. 54 (1988).

Guez, Eilbert and Kam, Neural network architecture for control. *IEEE Control System Mag.* 22–25 (1988).

Hinton G., D. Plaut and S. Nowlan, Neural network simulator. Unpublished (1987).

Hopfield J. J., Neural networks and physical systems with emergent collective computational abilities. *Proc. Natl Acad. Sci., USA* **79**, 2554–2558 (1982).

Isermann R., Process faults detection based on modeling and estimation methods—a survey. *Automatica* **20**, 387–404 (1984).

Jordan M. I., Supervised learning and systems with excess degrees of freedom. COINS Technical Report 88-27, Computer Science Department, University of Massachusetts at Amherst (1988).

Kawato M., Y. Uno, M. Isobe and R. Suzuki, Hierarchical neural network model for voluntary movement with application to robotics. *IEEE Control Systems Mag.* April, 8–16 (1988).

Kokawa M., S. Miyazaki and S. Shingai, Fault location using digraph and inverse direction search with application. *Automatica* **19**, 729 (1983).

Lapp S. A. and G. J. Powers, Computer-aided synthesis of fault trees. *IEEE Trans. Reliability* **26**, 2 (1977).

Lippman R. P., An introduction to computing with neural nets. *IEEE ASSP Mag.* April, 4–22 (1987).

McClelland J. L., D. E. Rumelhart and The PDP Research Group, Parallel distributed processing: explorations in the microstructure of cognition. *Psychological and Biological Models*, Vol. 2. Bradford, Cambridge, Mass. (1986).

McCloskey M. and N. J. Cohen, The sequential learning problem in connectionist modeling. Preprint (1988).

Miller W. T. III and R. P. Hewes, Real time experiments in neural network based learning control during high speed nonrepetitive robot operations. *Proc. of the Third IEEE Int. Symp. on Intelligent Control*, Washington, DC, 24–26 August (1988).

Minsky M. L. and S. Papert, *Perceptrons: An Introduction to Computational Geometry*. MIT Press, Cambridge, Mass. (1969).

Oyeleye O. O. and M. A. Kramer, Use of causal information in determining qualitative process behavior. *AIChE Jl* (1988).

Psaltis D., A. Sideris and A. Yamamura, A multilayered neural network controller. *IEEE Control System Mag.* April, 17–21 (1988).

Rich S. and V. Venkatasubramanian, Model-based reasoning in diagnostic expert systems for chemical process plants. *Computers chem. Engng* **11**, 111-122 (1987).

Romagnoli J. A. and G. Stephanopoulos, On the rectification of measurement errors for complex chemical plants. *Chem. Engng Sci.* **35**, 1067 (1980).

Rosenblatt F., The perceptron: a probabilistic model for information storage and organization in the brain. *Psychological Rev.* **65**, 386–408 (1958).

Rumelhart D. E., J. L. McClelland and The PDP Research Group, Parallel distributed processing: explorations in the microstructure of cognition. *Foundations*, Vol. 1. Bradford, Cambridge, Mass. (1986).

Sejnowski T. E. and C. R. Rosenberg, Parallel networks that learn to pronounce English text. *Complex Systems* **1**, 145-168 (1987).

Smolensky P., Information processing in dynamical systems: foundations of harmony theory. *Foundations*, Vol. 1. Bradford, Cambridge, Mass. (1986).

Sutton R. S., Two problems with backpropagation and other steepest-descent learning procedures for networks. *Proc. 8th Conf. of the Cog. Sci. Soc.*, pp. 823-831 (1986).

Sutton R. S., Learning to predict by the methods of temporal differences. *Mach. Learning* **3**, 9-44 (1988).

Umeda T. *et al.*, A graphical approach to cause and effect analysis of chemical processing systems. *Chem. Engng Sci.* **35**, 2379 (1980).

Ungar L. H. and B. Powell, Fault diagnosis using nonlinear adaptive networks. *AIChE National Meeting*, November (1988).

Venkatasubramanian V., Inexact reasoning in expert systems: a stochastic parallel network approach. *IEEE Conf. AI Applic.*, Florida (1985).

Watrous R. L., Learning algorithms for connectionist networks: applied gradient methods of nonlinear optimization. Technical Report MS-CIS-87-51, University of Pennsylvania, Department of Computer and Information Science (1987).

Watrous R. L. and L. Shastri, Learning phonetic features using connectionist networks: an experiment in speech recognition. Report MS-CIS-86-78, Dept of Computation and Information Science, Moore School, University of Pennsylvania (1986).

Widrow B. and R. Winter, Neural nets for adaptive filtering and adaptive pattern recognition. *IEEE Comput.* 25–39 (1988).

Widrow B. and S. D. Stearns, *Adaptive Signal Processing*. Prentice-Hall, Englewood Cliffs, New Jersey (1985).

Fault diagnosis using nonlinear adaptive networks

Lyle H. Ungar and Benjamin A. Powell
Departments of Chemical Engineering and Computer Science
University of Pennsylvania
Philadelphia, PA 19104

Abstract

The use of adaptive (neural) networks for fault diagnosis is explored. Input nodes are associated with observable alarms and sensor measurements, output nodes are associated with faults, and connection strengths representing correlations between them are learned using the delta rule and the back-propagation algorithm. Intermediate ("hidden") nodes represent combinations of process variables. The resulting system is a pattern recognizer which is able to learn nonlinear and logical relationships as well as linear correlations. Results are presented for diagnosing failures in a small model chemical plant. Learning in adaptive networks given qualitative (alarm) and quantitative (sensor) data are compared, and the effect of noise is studied.

Linear networks are easily trained to diagnose faults from sets of alarms. They give results equivalent to standard statistical analyses, and can be automatically translated into traditional rule-based expert systems - but with significant loss of ability to respond to incomplete and noisy measurements. Nonlinear networks are necessary for a set of problems which require context sensitivity (problems containing the exclusive or), for some problems where optimal alarm thresholds are to be learned, and for problems which require nonlinear quantitative modeling.

1. Introduction

The diagnosis of process upsets or malfunctions can be viewed as a pattern association problem in which one wishes to recognize equipment or sensor malfunctions (faults), and perhaps appropriate responses, based on observed patterns of sensor and alarm readings. Adaptive networks -- often called neural, connectionist, or parallel distributed processing networks -- provide a flexible mechanism for learning to recognize faults from such patterns. By learning the strengths of associations between sensor readings and faults, adaptive networks can learn to rapidly make complex diagnoses.

Adaptive networks have proven useful as pattern associators. They are being used for signal processing in applications such as understanding spoken speech [Sejnowski and Rosenberg 1987, Watrous and Shastri 1986] and recognizing written characters, and have been extensively tested in complex pattern recognition problems such as learning regularities in English [McClelland et al. 1986, Elman and Zipser 1987]. They are well suited to learn and retrieve correlations between patterns such as measurements and faults or responses, and are particularly useful when the measurements are incomplete, inaccurrate or erroneous.

A variety of statistical techniques and expert systems have been developed for fault detection and sensor validation [Isermann 1984, Romangnoli and Stephanopoulos 1980, Rich and Venkatasubramanian 1988]. These techniques are good for the tasks they are programmed for (e.g. checking mass balances), but are generally unable to learn to recognize recurring patterns, such as noting that a certain set of sensor readings indicates a flooded column or that a particular response only works well at high flow rates. Adaptive controllers, which come closer to the spirit of this work, adjust parameters in linear process models, but do not learn explicit relationships between symptoms, faults, and control actions [Astrom 1987]. Human experts learn which minor symptoms first indicate recurring faults, and become better at taking prompt corrective action. The adaptive networks described below give computers some of the same ability. Because they must be trained on observed data, adaptive networks are most useful for fault diagnosis in two contexts: (1) as a basis for process control for frequently repeated minor disturbances and malfunctions and (2) for fault detection problems in which one is able to generate (e.g. by simulation) an exhaustive set of faults and symptoms. Quality control of complex processes, where a good model of the process is not available, is a particularly appropriate task.

A major weakness of most current diagnostic systems based on expert systems or artificial intelligence techniques is that they can only handle problems that can be described by Boolean combinations of qualitative values such as "high" and "low" [Rich and Venkatasubramanian 1988]. Definitions of the threshold values at which "high" and "low" start must be entered by hand. Work using fault trees and signed digraphs [Lapp and Powers 1977, Umeda et al. 1980, Kokawa et

al. 1983, Oyeleye and Kramer 1988] shares this weakness. Systems based on adaptive networks lend themselves naturally to incorporating the more quantitative relations which are necessary in many fault diagnosis problems, particularly those which deal with products that are slightly off specification rather than with catastrophic failure.

Adaptive networks can be viewed as a technique for generating robust expert systems from example situations - or more precisely, for generating programs that behave like noise-tolerant "shallow" expert systems. Alternatively, they can be viewed as an extension of adaptive control techniques to better handle pattern recognition. As in adaptive control, a model of the process is built and updated in response to observed situations. However, adaptive networks offer major advantages for many pattern recognition problems such as recognizing context-dependent phenomena; Adaptive controllers and statistical methods tend to be bad at recognizing that a given value for a sensor may be "high" only depending on the values of other sensors. As a different formalism for adaptive control, adaptive networks also suggest new ways of handling nonlinearities and of including logical reasoning such as has been associated with expert systems.

Most of the work using adaptive networks has been done using linear networks, in which outputs vary linearly with inputs [Minsky and Papert 1969, Gallant 1988]. Linear networks are, not surprisingly, much easier to build and analyze than nonlinear networks. Linear adaptive networks have been shown under certain moderately restrictive conditions (see section 4) to give the same diagnoses as optimal Baysean techniques. They can incorporate observed frequencies of occurrences of faults and costs of false diagnosis [Gallant 1987]. However, linear networks are unable to solve a significant body of problems. Many of these arise when quantitative sensor readings are used, rather than the qualitative high/normal/low readings of alarms. Quantitative readings can allow disturbances to be recognized before they become serious, and are essential in many quality control problems. Nonlinear adaptive networks can represent both quantitative models and logical relations, and so can be viewed as a generalization of linear adaptive control and statistical methods to nonlinear systems. Thus nonlinear networks are crucial for many of the applications to which adaptive networks are best suited.

The ability to flexibly combine logical relationships such as are expressed by a fault tree with quantitative relationships such as mass balances is powerful, and the concept of a system which "can learn anything" is attractive. Strong claims have been made of adaptive networks [Rosenblatt 1958, Rumelhart et al. 1986] and strong responses have been made describing their limitations [Minksy and Papert 1969]. In this article we try to show how adaptive networks are useful for fault recognition problems, and to clarify what can and cannot be done using linear networks.

The following section describes adaptive networks in more detail and describes the particular learning algorithm we use. Sections 3 and 4 then show several small examples of the use of adaptive networks for fault diagnosis and provide a summary of some of the theoretical results on the behavior of linear networks. Chapter 5 discusses nonlinear networks and shows a number of cases in which they are necessary; it contains most of the new results in the paper. Chapters 6, 7 and 8 conclude by describing some of the shortcomings of current adaptive networks and some of the extensions necessary to use them to do adaptive control as well as fault detection.

2. Adaptive network structure and learning algorithm

We consider adaptive networks which take the form of a set of nodes connected by links. (See figure 1.) The input nodes, which receive their inputs from alarms or sensors (generally after preliminary filtering and smoothing), are connected via a set of intermediate or "hidden" nodes to the output nodes, which give diagnoses of the fault and/or recommendations for changes in process control set points. The hidden nodes are functions of the observed variables, and may or may not have clear physical interpretations.[1]

Each node "j" takes as inputs the products of the outputs of the nodes "i" connected to it and the weights of the links w_{ji} between the pairs of nodes. The node i then produces an output which, depending on the exact scheme used, approximates one if the sum of these inputs is greater than a threshold value, or zero if the sum is less than the threshold. (See figure 2) The output from any node may be an input to another node. The output of each node only depends on its inputs and its threshold, and thus each node can be considered a separate processor operating in parallel with the other nodes. By analogy to networks of neurons in a brain, the nodes may be thought of as neurons and the links between them as synapses. Learning consists in determining values for the weights and thresholds which lead to optimal associations between the inputs and outputs.

A number of different adaptive networks structures and learning mechanisms have been proposed, including the **Boltzmann machine** and variants such as harmony theory, which are modeled on thermodynamics and information theory [Ackley et al. 1985, Smolensky 1986; see Venkatasubramanian 198x for an early application to fault diagnosis], and many different networks growing out of early work on **Perceptrons** [Rosenblatt 1958] and **Adelines** [Widrow and Winter 1988], most notably an approach called **Parallel Distributed Processing** (PDP) [Rumelhart et al. 1986]. There is also extensive work which attempts to model the brain more closely. See the proceedings of the International neural

---

[1]Hidden nodes are not used in linear networks because they merely add redundant linear combinations of the inputs and thus add no representational power.

network society (INNS) or the IEEE neural net conference for papers on all aspects of neural networks. The learning mechanisms used by the parallel distributed processing group are relatively simple, learn quickly, and have produced the most impressive results to date, and so are used in this work.

The remainder of this section describes the generalized delta rule and back-propagation algorithm which we use to learn weights and thresholds; those familiar with Rumelhart et al. [1986] or similar descriptions [Werbos 1974] may proceed directly to section 3.

Each node (neuron) j with inputs of strength o_i coming to it from nodes or inputs i along links with weights w_{ji} has a total input of strength $\Sigma\, w_{ji} o_i$. The output, o_{pj}, of the node for each pattern p is taken to be

$$o_{pj} = \frac{1}{1 + e^{-(\sum_i w_{ji} o_{pi} + \theta_j)}} \qquad (2.1)$$

This function is a continuous sigmoidal function which approximates a Heavyside step function with the step at the threshold cutoff, θ_j. By using a continuous function rather than a step function, one can find the derivative of the output with respect to the weights, and thus determine the optimal direction in which to change the weights to produce a desired output. Such gradient descent techniques tend to be relatively efficient.[2]

The nodes are grouped in layers (see Fig 1). The output of the network for a given input pattern is found by successively calculating the outputs of each layer, which then serve as the inputs to the following layer.

Learning occurs by comparing the actual output with the desired output (the diagnosis that is known to be correct). The weights between the layers are successively adjusted so as to bring the output closer to the correct output. To do this without destroying other patterns that are stored in the network, changes to the weights are made gradually using the generalized delta rule:

$$\Delta w_{ji}(n+1) = \eta(\delta_{pj} o_{pi}) + \alpha \Delta w_{ji}(n) \qquad (2.2)$$

where the error signal for output nodes, δ_{pj}, is proportional to the

---

[2]Other, less efficient, adaptive networks use Monte Carlo methods to turn links on or off (set the weights to 1 or 0) and approach local optima in the solution space.

difference between the actual output o_j and the target output t_j and is given by:

$$\delta_{pj} = (t_{pj} - o_{pj}) o_{pj} (1 - o_{pj}) \tag{2.3}$$

and the error signal for hidden nodes uses a weighted error signal from the nodes they give inputs to:

$$\delta_{pj} = o_{pj} (1 - o_{pj}) \sum_k \delta_{pk} w_{kj} \tag{2.4}$$

In the runs presented below, a learning rate of $\eta = 0.5$ was used with $\alpha = 0.3$ carrying forward thirty percent of the past error to the subsequent iteration. In the above learning scheme weights which most strongly influence the output are changed the most. For a more complete description, see Chapter 8 of Rumelhart et al. [1986]. Note that the delta rule (when $\alpha = 0.0$) is also often called the Widrow-Hoff or least mean square rule [Sutton and Barto 1981, Widrow and Winter 1988].

The above algorithm is designed for use on a parallel machine; for standard serial computers, techniques such as Newton's method can be used on a set of equations which governs all of the weights. Newton's method gives identical results with orders of magnitude less computer time [Watrous 1987]. The results presented below do not depend on the particular algorithm used.

3. Linear adaptive networks for fault detection

This section describes the training procedure and shows some simple examples of the use of linear adaptive networks. Each network was trained using a set of pairs of inputs (alarm or sensor readings) and outputs (faults). Alarm readings were represented as an input of "1" for alarm state and "0" for no alarm. Process variables which could be either low, normal, or high were represented by pairs of inputs as (0 1), (0 0) or (1 0), respectively. (This is equivalent to having two alarms: a high alarm and a low alarm.) Quantitative sensor readings were normalized to lie on the region (0,1), where 0 corresponds to the minimum possible reading and 1 the maximum. (Raw sensor data can be handled, but can greatly slow learning.) For some trials, noise was introduced to the simulated sensor readings. In these cases, the sensor data presented to the network was generated to be normally distributed with specified mean and standard deviation for each reading. Uniformly distributed readings on specified intervals produced similar results. In all examples shown, outputs were taken to be Boolean. It is possible to train the system to produce quantitative outputs, but larger networks and longer training times can be required for these more difficult problems.

The adaptive network was trained in each case by multiple presentations of a training set of all sensor reading/fault groups to be learned.

For the case of noisy inputs, each presentation of the training set was different, but all shared the same mean and standard deviation. The system is initialized by giving the weights small random values. Each symptom-fault pair in the training set is then presented to the network, and the weights are updated using the algorithm presented in section 2. The training set is shown repeatedly to the network: each such showing is termed an iteration. Hundreds or thousands of iterations are often required for convergence using the back propagation algorithm, depending on the difficulty of the problem. This, of course, does not mean that thousands of different examples must be provided. If a database of historic events is maintained, events which are only observed once in the real world can be shown repeatedly to the network.

All runs presented here were made on a Symbolics Lisp machine using a simulator developed at Carnegie-Mellon University [Hinton et al. 1987].

3.1 Fault diagnosis example

A set of faults and alarms corresponding to the operation of a simple stirred tank reactor was used to test the learning algorithm. As can be seen in Figure 3, the reactor has two feedstreams. It is taken to be exothermic and require cooling. Note that we do assume that there are controllers on the plant and that sensors and controllers can fail as well as other equipment. A list of the faults considered and the associated sensor readings appears in Table 1. As it is specified, the system has twelve possible faults and an all normal state, which are diagnosed using six sensor readings. Since most of the sensors can take on values of low, normal, and high, this leads to eleven inputs to the network. No transient data were considered (but see section 7).

With Boolean (alarm) inputs, the system converges to outputs within 0.03 of the specified output in approximately 1700 iterations. Using a "winner take all" criterion in which the highest output is selected as the fault leads to flawless prediction in much fewer iterations. An error criterion of 0.5 only takes less than 100 iterations; since the outputs are all zero or one, this is entirely adequate.

A corresponding quantitative problem was generated by using input values of 0.7 for high, 0.5 for normal and 0.3 for low. For reasons discussed in detail in section five, attempts to learn this problem using a linear network fail.

The operation of adaptive networks and their failures and successes are best explained by looking at very simple problems. To see how quantitative inputs are handled, consider a simple system with a single sensor and two faults, one corresponding to a high sensor reading and the other corresponding to a low reading. Assuming that definitions of "high" and "low" are known in advance, the network and training set take the form shown in figure 4. Links are labeled with their weights, and the values of the thresholds of nodes are given in the circles. Different solutions may be reached depending on the random initial

weights; all have a similar form for this problem.

If a single sensor is used instead of the alarms, the network and training set shown in figure 5 result. It can be seen that the nodes are acting as thresholding devices, discriminating between alarm and normal states. Optimal thresholds are automatically determined as part of the learning procedure. It is shown in section five that in nonlinear networks the thresholding is done in the first layer, and then the results are combined and "interpreted" in subsequent layers. Similar results are obtained when noise is added to the sensor reading.

Sensor data contains more information than alarm data and so, as one might expect, more accurate diagnoses can be made with sensor data. Some of the advantages are obvious and can be obtained with linear networks; others which are context dependent require nonlinear nets. A trivial example with two sensors both indicating a single fault, shown in figure 6, demonstrates the advantages of using sensor data rather than alarms.

If either or both of the sensors are high, the fault is present. (If both being present implies no fault, a nonlinear net must be used; see section 5.) Using quantitative inputs allows one to conclude that the fault is present even if both sensors are slightly below the usual alarm thresholds. In fact, for a linear network this is unavoidable, although nonlinear networks can learn either (1) that both sensors near the threshold indicates a fault or (2) that exactly one of the sensors must actually be above the threshold.

3.2 Multiple faults

A Boolean linear network with N input nodes can only clearly distinguish only N of the 2^N possible input patterns, and even then only if they are linearly independent. If combinations of faults must also be recognized, far more than N patterns could, in theory, be required. In theory, learning to recognize the symptoms corresponding to all pairs of N faults can require storage of as many as N^2 patterns. In practice, when multiple faults occur simultaneously, they typically share most of the symptoms of the individual faults that comprise them. When the symptoms of multiple faults are close to linear combinations of those of the individual faults, adaptive networks are able to take advantage of this admirably.

We have tested this by using the network resulting from training on the set of single faults in the training set given in Table 1. In all cases at least one of the faults was correctly identified. As expected, depending on the degree to which the faults interact to create new symptoms (or remove old ones), fault pairs may be immediately recognized or may require additional training. More robust handling of multiple faults would require the use of a model of the process, although one could train the system to recognize a limited set of multiple faults such as those that share common cause.

3.3 Redundancy and the effect of adding and removing links and nodes

In designing an adaptive network, one must decide how many hidden nodes to use. Fortunately, the system performance is not unduly sensitive to the number of nodes or to the network structure chosen. Extra nodes and links to the network do not increase the number of example cases an adaptive net must see to learn a given set of examples. The network simply does not use the extra nodes [Rumelhart et al 1986].

One might be tempted to remove superfluous links, so that insignificant or redundant correlations cannot be learned. Perhaps surprisingly, removing links does not speed learning, but rather slows it. The extreme limit of removing redundant links occurs in what we term *minimum-based structured* adaptive networks, which contain the minimum number of links necessary to solve a problem. Minimum-based structured networks contain no redundant links; an output node is connected only to those input nodes needed to distinguish the fault it represents from faults of similar output nodes. Because arbitrary decisions must be made in removing links, a fully connected network typically has many corresponding minimum-based structured networks; for the discussion which follows it does not matter which is picked.

Minimum-based structured adaptive networks could be used to generate a nonredundant set of IF-THEN (production) rules or an efficient decision tree. This is, however, not desirable since fully connected networks are fast and are much less sensitive to noise. The redundancy inherent in adaptive networks is one of their most attractive features. Alarm and sensor readings from chemical and power plants are implicitly redundant due to the relationships arising from conservation of mass and energy. In typical plants, where there are many sensors, there are many redundant relationships between the readings. Fully connected adaptive networks take advantage of redundancy to speed learning and reduce sensitivity to noise.

The minimum-based structured adaptive net for the training set in Table 1 (described in section 3.1) contains only 26 links between the input and output nodes, as compared to the 132 links in the fully connected network. In the minimum-based structured adaptive network, for each fault there is another fault which has an input pattern differing by only one alarm. This network is, of course, much less robust in the face of noise than the fully connected network; if any of the key distinguishing inputs is wrong, then an incorrect conclusion is reached.

The lack of redundancy in the structured adaptive net results in a doubling of the iterations required to solve the problem. Learning occurs more rapidly for the fully connected net because it is simultaneously learning all of the different correlations; Predictive correlations are found more rapidly when multiple correlations can be learned simultaneously. This is counter-intuitive only if one makes the false assumption that simultaneously learning different correlations leads to "confusion" or slower learning of the independent

correlations.

4. Statistical interpretation of adaptive networks

The major work to date using adaptive networks for fault detection is by Gallant [1987, 1988], who uses linear networks to recognize faults from symptoms. The representation and learning algorithm he uses are different from those presented above, both in being linear and in using a different learning rule. However, many of the conclusions he reaches are based on general earlier proofs [Minsky and Papert 1969], and provide insight into our system. Similar results are also available for a simple linear network using the delta learning rule [Stone 1986]. Gallant's adaptive network, being linear, is much more limited in scope than that presented in this paper, but has the advantage of allowing rigorous proof of several attractive properties. Looking at the conditions under which it is guaranteed to reach optimal performance shows both the power and the limitations of linear systems.

Gallant looks at fault diagnosis problems which satisfy the following conditions:

(1) no multiple faults
(2) only Boolean readings (1, -1 representing "problem" or "no problem"; He also sometimes uses 0 to represent "unknown.)
(3) Each fault corresponds to a single pattern of alarms in the absence of noise.
(4) For each fault the noisy readings are conditionally independent (uncorrelated).

Gallant calls such problems **Noisy, Single-pattern, Boolean (NSB)** fault detection problems. Note that the noise is very different from that of quantitative readings; each reading is changed (e.g. from "problem" to "no problem") with a specified probability, but no intermediate values are used.

Under the NSB fault conditions it is not difficult to show that a network can be trained to give optimal performance - the predictions will be identical to those given by using the Baysean estimates of the probability of a fault being present given the observed alarms. The frequency of occurrence of different faults is represented by their frequency in the training set and is automatically accounted for in the predictions.

Convergence to optimality still holds under some relaxations of the NSB conditions, but there are several important classes of problems for which linear networks are not sufficient. Many of these are for problems in which quantitative sensor readings rather than Boolean alarm states are available. If one knows a set of alarm thresholds, and the alarm thresholds are independent of the sensor readings, then the NSB conditions often hold. However, determining alarm thresholds is often difficult [Andow 1981], and rapid, accurate diagnosis may require use of situation-dependent thresholds. The assumptions of independence of noise in the readings is also typically not met; noise

which causes fluctuations in one reading will often cause correlated fluctuations in other readings. We show below that nonlinear networks are needed to resolve this and other problems.

General results for quantitative inputs and outputs exist for simple linear systems. For learning using the delta rule in a linear network without thresholds ($o_j = \Sigma w_{ji} o_i$, where o_j is the jth output and o_i is the ith input), it can be shown that for any distribution of noise the mean value of the output of the system approaches the mean value of the targets. (This of course does not imply that any of the targets are correctly predicted.) When the noise in the inputs and targets is normally distributed, the expected value of the output for any input pattern approaches the expected value of the target for that input [Stone 1986].

A better intuitive understanding of these results can be obtained from an analogy to linear regression. Learning in the linear network can be viewed as trying to find a set of coefficients $\underline{w}$ such that the total mean squared error (the sum over all patterns of the sum over all nodes of the square of the difference between the target output and the actual output) is minimized. This is precisely a multiple linear regression in which the weights $\underline{w}$ are the regression coefficients. The learning algorithm that we are using gives qualitatively similar behavior but, although it is a specialized case of nonlinear least squares [Werbos 1988], the analysis is difficult.

5. When are nonlinear networks needed?

Linear networks have been shown to be capable of learning to diagnose faults in a variety of circumstances, including using noisy quantitative inputs. Theorems show that linear networks are sufficient for the noisy single Boolean fault problem. When, then, does one require nonlinear networks with hidden units? An obvious answer is "any time one needs to learn a nonlinear model of the plant" or "any time a multiple linear regression will fail to give accurate predictions," but other answers exist based on context dependence.

5.1 Context Sensitivity and the XOR Problem

Situations arise in which a single observation provides no information; to change one's assessment of the likelihood of a given event having occurred, one must look at two readings simultaneously. A simple example occurs in looking at two flow meters on the same pipe to determine if the readings are to be believed or not (i.e. whether a sensor has failed). Assuming for brevity that only "high" and "low" readings are possible, the sensor readings and their interpretations are as follows:

Sensor1	Sensor2	Believe the reading?
high	high	yes
high	low	no
low	high	no
low	low	yes

Observing, for example, that sensor1 is high gives no information as to the accuracy of the reading. The same is true for the other readings. The input-output table given above is isomorphic with the exclusive or (XOR). Linear networks cannot learn the XOR problem because they calculate correlations between single inputs and single outputs; in the XOR, there are only higher order correlations.

Problems such as the XOR, in which one reading can only be interpreted in light of other readings are fairly common. Asking if all readings are the same (as in parity checking) is a special case of checking mass and energy balances.

5.2 Multiple Thresholds

When quantitative inputs are used instead of alarms, hidden units may also be required. Consider the simple case where we wish to determine whether a measurement indicates that there is a problem. A reading of 0.5 will be taken as normal, while readings of 0.3 or 0.7 will be considered indicative of a malfunction. A linear system cannot capture this dependence; a two-layered network is required in which the first layer contains nodes which compare the reading to 0.3 and to 0.7 and the second layer combines and interprets the outputs of these nodes.

Experiments confirm this interpretation. A network consisting of a single node never succeeds in learning the input/output table:

input	output
0.3	1
0.5	0
0.7	1

This pattern is contained in the quantitative version of the fault diagnosis problem presented in Section 3, and explains why a linear network fails to learn it. When the same pattern was presented to a two layer network as shown in figure 7, success was always obtained. The interpretation of this network is precisely as given above; the first nodes determine the appropriate thresholds, and the second node combines the thresholds to give the desired output. Table 2 shows the outputs of the hidden nodes, which can be seen to have a thresholding function; Node-1 fires on inputs below 0.5, while node-2 fires on inputs below 0.7. Incorporating noise into the inputs gives very similar behavior.

input	node-1	node-2	output
.3	.755	.99	.98
.5	.08	.84	.03
.7	.00	.23	.97

Table 2

In an actual plant, the simple situations requiring hidden nodes described above will, of course, be embedded in a much larger network. Adaptive networks succeed quite well in using or ignoring extra nodes as the problem dictates; the structure does not need to be fine-tuned by the person developing the network. The only cost of extra nodes is the computation. However, the hidden nodes must be available to represent the solution.

5.3 Fault detection example with quantitative inputs

Fault detection with quantitative inputs was tested by modifying the system shown in Fig. 3 and given in Table 1 to have quantitative inputs. A training set for this problem is given in Table 3. A network was used with a layer of eight hidden nodes. The system learned to recognize all of the faults. Adding Gaussian noise with a standard deviations of 0.15 to the sensor readings did not significantly effect learning speed.

6. Problems and limitations of adaptive networks

Adaptive networks have a number of limitations which still need to be addressed. Some of these are generic and minor, but some present potentially large stumbling blocks to their widespread use.

6.1 Convergence

As with all nonlinear systems, convergence in networks with hidden nodes is not guaranteed. Like most researchers, we have found that when a solution exists the network almost always converges to it. There are often multiple solutions but, in spite of the possibility of spurious local minima and periodic and chaotic oscillations between different solutions, a single solution is virtually always converged to.

For small systems that had large amounts of noise, however, we often did find convergence problems. When there is overlap of signals in different groups (i.e. when some of the "normal" signals are higher that some of the "high" signals), the networks can jump to spurious solutions in which the outputs are far from correct, but produce errors

such that the corrections to the weights sum to zero. These nonlocal minima are disturbing and may potentially limit the usefulness of the networks. Encouragingly, these convergence problems did not occur with the large systems. We are still investigating the formal properties of the systems that get stuck in local minima, but are optimistic that such problems can usually be avoided in applications.

6.2 Learning speed

On serial machines, the speed of learning using the back-propagation algorithm is not impressive. The runs presented above typically required hundreds of passes through the set of training examples. Worse, it has been shown [Minksy and Papert 1969] that a variety of problems can require exponentially large numbers of neurons to obtain solutions. Although there are no comparable rigorous proofs for nonlinear networks, it appears that similar problems exist. Overcoming these limitations will require the use of structured networks that can use causal models of the plant (flowsheets and process and instrumentation diagrams) to focus reasoning.

6.3 Explanation of results

Like most expert systems created by noting correlations rather than by deduction from models using first principles, and like all numerical methods, adaptive networks are unable to provide comprehensible explanations of how they reached conclusions, or why they are true. Although it is possible [Gallant 1987] to find a minimal set of sensor readings from which it is possible to deduce the fault, many different sets of sensor readings can be generated. In our experience, because the correlations often skip long chains of intermediate causal effects, the explanations generated are not particularly useful. For example, a chain of events such as "the decreased temperature of the feed stream required the use of more steam which reduced the steam available for another process, cooling and changing the quality of the output" might be represented as a connection between the one feed stream temperature and the product quality of the other output. This leads to minimal computation during diagnosis, but is of little use in understanding why the results occurred. Again, structured networks hold some promise for guiding learning.

6.4 Forgetting

Another serious limitation of adaptive networks is that they tend to forget seldom-seen patterns too rapidly [McCloskey 1988]. Because the network "reallocates" nodes to where they are most useful, patterns which have not been seen in some time are forgotten. Such forgetting must be overcome in training by interspersing infrequent patterns that are to be remembered among the new ones. Thus, as adaptive networks currently function, one would probably not want to let them adapt online. The learning procedure must rather be thought of as an offline generation tool, which can be used to frequently update the network in

the plant with networks trained using training sets modified to include new plant data.

7. Extension to control

Given that adaptive control and neural networks stem from the same historical roots, surprisingly little work has been done using connectionist learning for adaptive control. Widrow has applied linear adaptive networks to adaptive control problems, and has described the potential uses of adaptive networks in learning modeling and inverse modeling, noise and echo cancellation, and similar tasks [Widrow and Winter 1988]. Their work relies on the ability of networks to capture linear input-output relations, and does not explicitly take advantage of the potential of networks to also represent more qualitative (Boolean) relationships or nonlinear relations such as context dependencies. The use of nonlinear networks for control is even less well developed. However, a nice demonstration of the potential power of nonlinear neural networks has been reported for the problem of balancing a pole on a moving cart [Barto et al. 1983, Anderson 1987].

Adaptive control is substantially different from fault analysis in the form of the feedback given to the network. In all of the examples presented above, the correct fault was given as part of the training set. In a control problem, the correct response is typically not given; the controller is given some measure of the goodness of the state of the system and must deduce or infer what the correct action was. To do this optimally, there must be a component of the network which models the system and can predict its behavior, and other components that learn how to respond [Werbos 1987, Barto et al.1983]. Development of such techniques for control applications is becoming an area of active research. There are also other minor differences between fault diagnosis and control: control requires better representation of data trends and controllers typically have a quantitative output. Analysis of quantitative time senses can require larger networks, and may be best done with more powerful neurons [Barto et al. 1983].

8. Summary

This paper demonstrates how adaptive networks can be trained to recognize faults from erroneous observations. Both quantitative (sensor) and qualitative (alarm) information can be used. Optimal thresholds for triggering alarms are learned; These can be dependent on the context provided by the states of other variables. Nonlinear networks are required for all but the simplest problems. Although the adaptive networks can be viewed as a special form of nonlinear regression, the network formalism provides help in the difficult task of choosing the appropriate nonlinear functionality.

The work presented above only looks at static information. However, trends can often be adequately represented by defining a separate input which gives the rate of change of the relevant sensor reading or by supplying old readings (i.e. using a "delay element" as in adaptive control). By adding these, and possibly more complex temporal representations [Sutton and Barto 1983, Sutton 1988], and unsupervised learning capabilities to the networks described above, it will be possible to develop adaptive controllers which can learn to respond to major changes in the plant or inputs. In addition to developing techniques to optimally use information on alarm sequences and data trends, we are currently studying the use of causal structure to guide learning in large adaptive networks. The end result, we hope, will be an adaptive controller that can learn to recognize and respond to a variety of malfunctions and disturbances.

Acknowledgments

Thanks to Geoff Hinton, David Plaut and Steven Nowlan at Carnegie Mellon University for supplying the source code to their adaptive network simulator, to Ron Katriel for his unflagging aid in deciphering and modifying the code, and to Venkat Venkatasubramanian for helpful discussions.

References

Ackley, D.H., G.E. Hinton, and T.J. Sejnowski, " A learning algorithm for Boltzmann machines, **Cognitive Science** 9, 147-169, 1985.

Anderson, C.W., "Strategy Learning with Multilayer Connectionist Representations," **Proceedings of the Fourth International Workshop on Machine Learning**, Irvine, CA, 1987.

Andow, P.K., "Fault trees and failure analyses: discrete state representation problems," **Trans IChemE** 59, 125-128, 1981.

Astrom, K.J., J.J. Anton and K.-E. Arzen, "Expert Control," **Automatica** 22, 1986.

Astrom, K.J., "Adaptive Feedback Control," **Proc. IEEE** 75(2), 185-217, 1987.

Barto, A.G., R.S. Sutton and C.W. Anderson, "Neuronlike elements that can solve difficult learning control problems," **IEEE Transactions on Systems, Man, and Cybernetics**, SMC-13, 834-846, 1983.

Elman, J.L. and D. Zipser, "Learning the hidden structure of speech," Technical Report 8701, Institute for Cognitive Science, University of California at San Diego, La Jolla, CA, 1987.

Gallant, S.I., "Automated Generation of Connectionist Expert Systems For Problems Involving Noise and Redundancy," AAAI Workshop on Uncertainty, Seattle, WA (1987).

Gallant, S.I., "Connectionist Expert Systems," Communications of the ACM 31, 2, (1988).

Hinton, G., D. Plaut and S. Nowlan, Neural network simulator, (unpublished), 1987.

Hopfield, J.J., "Neural networks and physical systems with emergent collective computation abilities," in Proc. Nat. Acad. Sci., USA, vol 79, 2554-2558, 1982.

Isermann, R., "Process faults detection based on modeling and estimation methods - a survey," Automatica 20(4), 387-404, 1984.

Kokawa, M., S. Miyazaki and S. Shingai, "Fault Location Using Digraph and Inverse Direction Search with Application," Automatica 19, 729, 1983.

Lapp, S.A. and G.J. Powers, Computer-aided synthesis of fault trees, IEEE Trans. Reliability, R-26, 2, 1977.

Lees, F.P., "Process computer alarm and disturbance analysis: outline of methods for systematic synthesis of the fault propagation structure," Comput. Chem. Eng. 8, 91-103, 1984.

McClelland, J.L., D.E. Rumelhart, and The PDP Research Group, Parallel Distributed Processing: Explorations in the Microstructure of Cognition, Volume 2: Psychological and Biological Models, Cambridge, MA, Bradford, 1986.

Minsky, M.L. and Papert, S., Perceptrons: An Introduction to Computational Geometry. Cambridge, MA, MIT Press, 1969.

McCloskey, M. and N.J. Cohen, "The sequential learning problem in connectionist modeling," preprint, 1988.

Nilsson, N.J., Learning Machines, New York, McGraw-Hill, Inc., 1965.

Oyeleye, O.O. and M.A. Kramer, Use of Causal Information in Determining Qualitative Process Behavior, AIChE J., in press, 1988.

Rich S. and V. Venkatasubramanian, "Model-based reasoning in diagnostic expert systems for chemical process plants," Comput. and Chem. Eng., in press, 1988.

Romagnoli, J.A. and G. Stephanopoulos, "On the rectification of measurement errors for complex chemical plants," Chem. Eng. Sci. 35, 1067 1980.

Rosenblatt, F., "The perceptron: A probabilistic model for information storage and organization in the brain," Psychological Review 65, 386-408, 1958.

Rumelhart, D.E., J.L. McClelland, and The PDP Research Group, Parallel Distributed Processing: Explorations in the Microstructure of Cognition, Volume 1: Foundations, Cambridge, MA, Bradford, 1986.

Sejnowski, T.E. and C.R. Rosenberg, "Parallel networks that learn to pronounce English text," Complex Systems, 1, 145-168, 1987.

Smolensky, P., "Information processing in dynamical systems: Foundations of harmony theory," in Rumelhart et al. 1986.

Stone, G.O., "An analysis of the delta rule and the learning of statistical associations," in Rumelhart et al. 1986.

Sutton, R.S. "Learning to Predict by the Methods of Temporal Differences," Machine Learning, in press, 1988.

Sutton R.S. and A.G. Barto,, "Toward a modern theory of adaptive networks: Expectation and prediction," Psychological Review 88, 135-170 1981.

Umeda, T., T. Kuriyama, E. O'Shima and H. Matsuyama, "A graphical approach to cause and effect analysis of chemical processing systems," Chem. Eng. Sci. 35 2379, 1980.

Venkatasubramanian, V., "Inexact Reasoning in Expert Systems: A Stochastic Parallel Network Approach," IEEE Conference on AI Applications, Florida, 1985.

Watrous, R.L. "Learning algorithms for connectionist networks: Applied gradient methods of nonlinear optimization," University of Pennsylvania, Department of Computer and Information Science Technical Report MS-CIS-87-51.

Watrous, R.L., and L. Shastri, "Learning phonetic features using connectionist networks: an experiment in speech recognition," MS-CIS-86-78, Dept. of Comp. and Inf. Sci., Moore School, U. Penn., 1986.

Werbos, P., "Backpropagation: past and future," Proc. IEEE Second International Conf. on Neural Networks," IEEE, New York, 1988.

Werbos, P.,"Learning how the world works: specifications for predictive networks in robots and brains," Proc. IEEE Int. Conf. On Sys., Man, and Cybernetics," IEEE, New York, 1987.

Widrow, B.and Winter, R., Neural Nets for Adaptive Filtering and Adaptive Pattern Recognition, IEEE Computer 25-39, 1988.

Widrow, B. and S.D. Stearns, Adaptive Signal Processing, Englewood Cliffs, NJ, Prentice-Hall, 1965.

Figure Captions

Fig. 1. Adaptive network showing input from sensors and alarms, (optional) hidden nodes, and outputs.

Fig. 2. A single node (neuron) showing rule relating inputs and output.

Fig. 3. Flow sheet for plant used in fault detection example. See Table 1 for faults and readings.

Fig. 4. Two input two output Boolean network and training set. Links are labeled with their weights, and the values of the thesholds of nodes are given in the circles. The left-most circles represent inputs, and so have no thresholds. The rows in the training set represent the inputs (alarms) and outputs (faults) for the cases: Fault-1 (F1) causes Alarm-1 (A1), Fault-2 causes Alarm-2 and all normal

Fig. 5. One input two output quantitative network and training set. The training set contains the cases F1 causes sensor to read low (0.3), all normal, and F2 causes sensor to read high (0.7).

Fig. 6 Two input one output quantitative network and training set.

Fig. 7 Network for recognizing existence of a problem from a single quantitative sensor reading.

Table 1. Patterns of alarm readings and faults corresponding to Figure 3. Each row gives the observed pattern of sensor readings corresponding to the specified fault. Sensors are FA: flow of A, FB: flow of B, Lev: level in reactor, Tem: reactor temperature, Out: flowrate out of reactor, and C: concentration at outlet of reactor. Readings are interpreted as (0,0) - normal (1,0) - high, and (0,1) - low.

Table 2. Outputs of intermediate nodes of the network shown in Figure 7 showing their function as thresholding devices.

Table 3 Patterns of sensor readings and faults corresponding to Figure 3. This is a quantitative version of Table 1, and contains the same information.

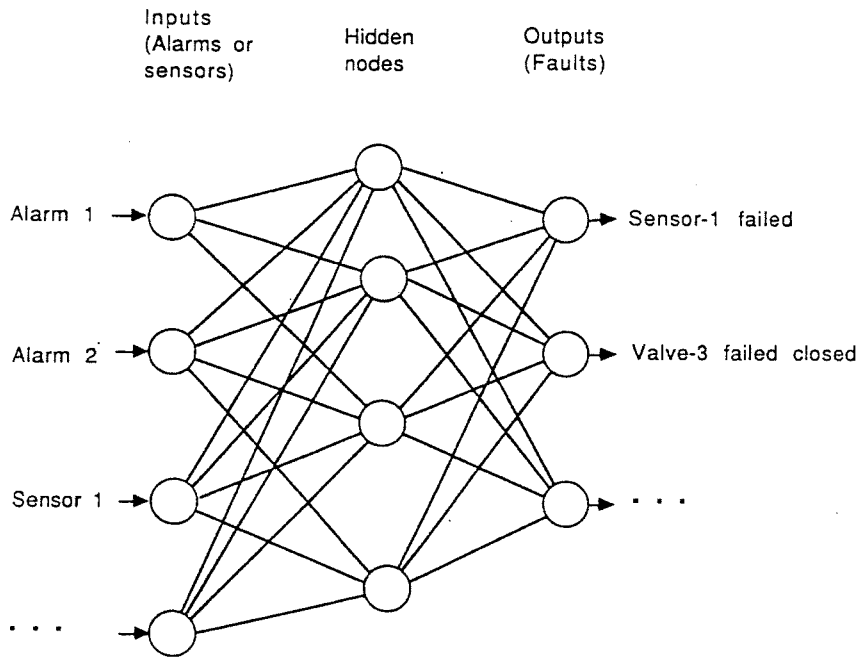
Inputs
(Alarms or
sensors)
Hidden
nodes
Outputs
(Faults)
Alarm 1
Alarm 2
Sensor 1
. . .
Sensor-1 failed
Valve-3 failed closed
. . .

Figure 1

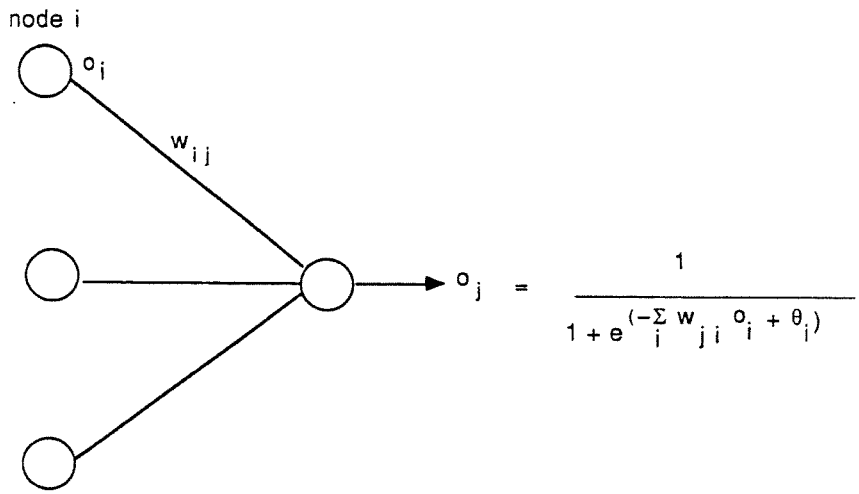

Figure 2

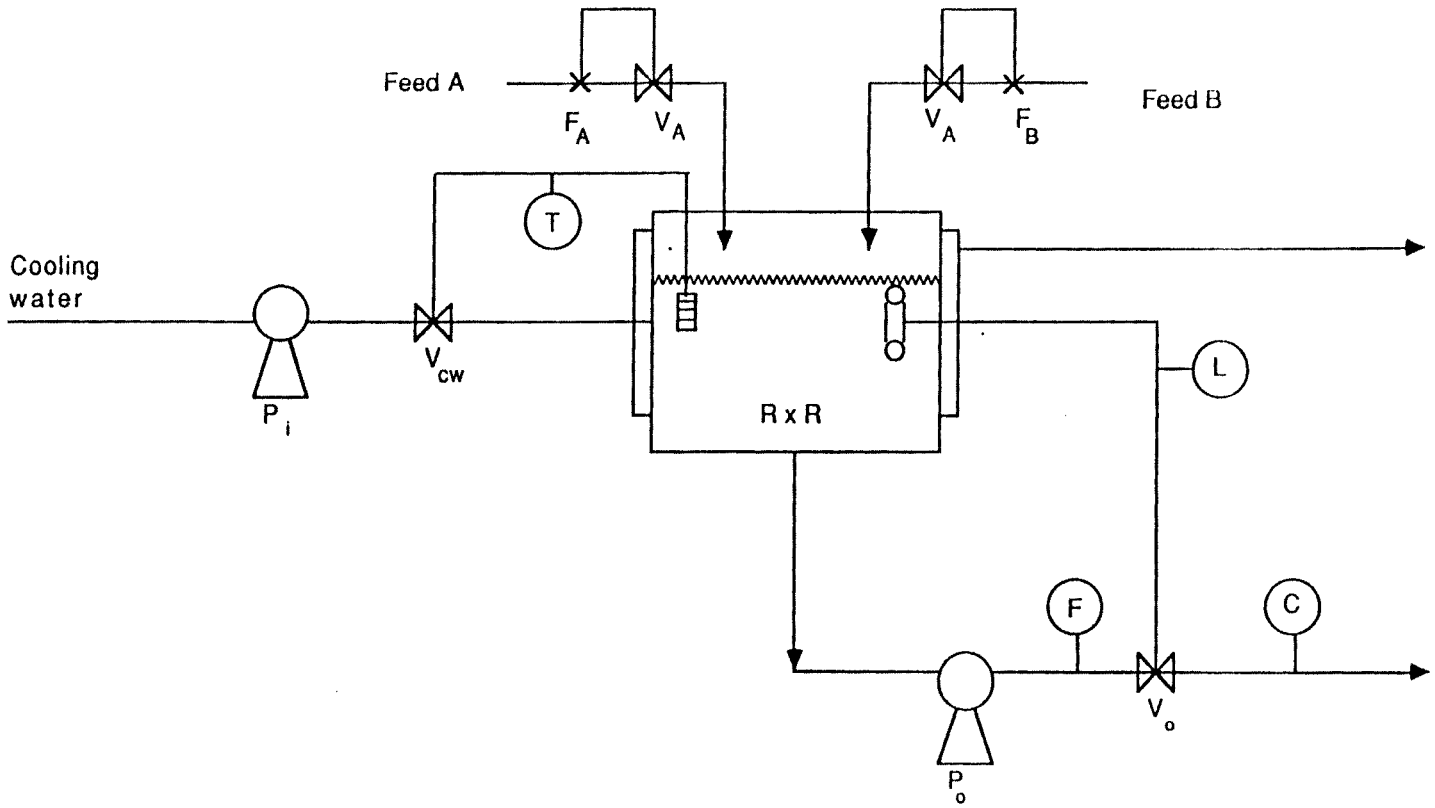

Figure 3

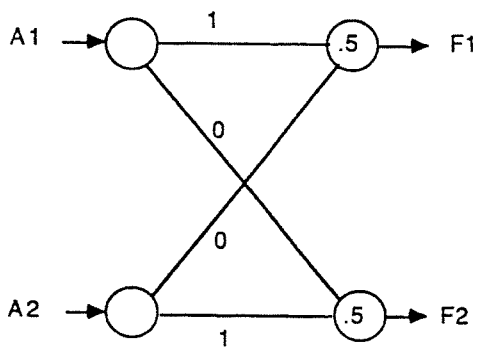

network

A1	A2	F1	F2
1	0	1	0
0	1	0	1
0	0	0	0

training set

Figure 4

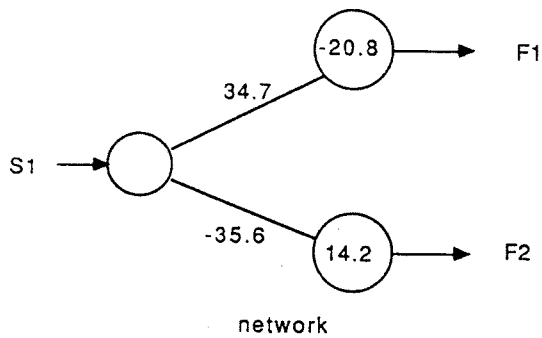

S1	F1	F2
.3	0	1
.5	0	0
.7	1	0

training set

Figure 5

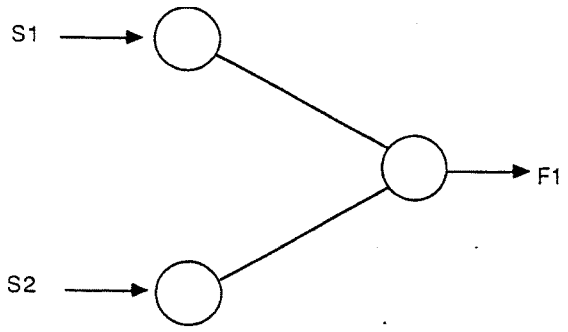

S1	S2	F1
0	0	0
1	0	1
0	1	1
1	1	1

Figure 6

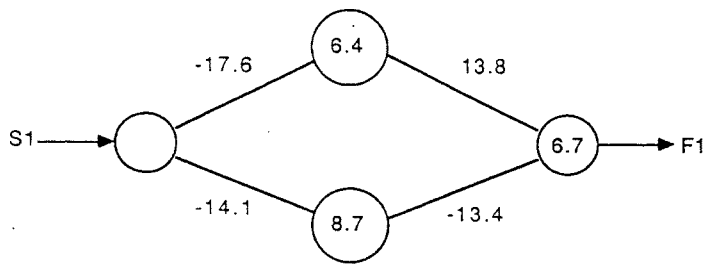

S1	F1
.3	1
.5	0
.7	1

Figure 7

FA	FB	Lev	Tem	Out	C	
0 0	0 0	0 0	0 0	0 0	0	everything normal
0 0	0 0	1 0	0 0	0 1	0	output pump fails
0 0	0 0	0 0	1 0	0 0	1	cooling water pump fails
0 0	0 0	0 0	0 1	0 0	1	cooling water value fails open
0 1	0 0	0 0	0 1	0 1	1	value A fails closed
0 1	0 0	0 0	1 0	1 0	1	flow sensor A fails low
1 0	0 0	0 0	0 1	0 1	1	flow sensor A fails high
1 0	0 0	0 0	1 0	1 0	1	valve A fails open
0 0	0 0	0 1	0 0	1 0	0	outlet value fails open
0 0	1 0	0 0	0 1	1 0	1	valve B fails open
0 0	0 1	0 0	1 0	0 1	1	valve B fails closed
0 0	0 1	0 0	0 1	1 0	1	flow sensor B fails low
0 0	1 0	0 0	1 0	0 1	1	flow sensor B fails high

Table 1

FA	FB	Lev	Tem	Out	C	
0.5	0.5	0.5	0.5	0.5	0.5	everything normal
0.5	0.5	0.7	0.5	0.3	0.5	output pump fails
0.5	0.5	0.5	0.7	0.5	0.7	cooling water pump fails
0.5	0.5	0.5	0.3	0.5	0.7	cooling water value fails open
0.3	0.5	0.5	0.3	0.3	0.7	value A fails closed
0.3	0.5	0.5	0.7	0.7	0.7	flow sensor A fails low
0.7	0.5	0.5	0.3	0.3	0.7	flow sensor A fails high
0.7	0 .5	0.5	0.7	0.7	0.7	valve A fails open
0.5	0.5	0.3	0.5	0.7	0.5	outlet value fails open
0.5	0.7	0.5	0.3	0.7	0.7	valve B fails open
0.5	0.3	0.5	0.7	0.3	0.7	valve B fails closed
0.5	0.3	0.5	0.3	0.7	0.7	flow sensor B fails low
0.5	0.7	0.5	0.7	0.3	0.7	flow sensor B fails high

Table 3

ATTACHMENT 2

ATTACHMENT 2: Response to Question 31

	2000 (unmarried single filing)	2001 (joint filing)	2002 (joint filing)	2003 (joint filing)	2004 (joint filing)
Salaries	146,051.44	291,140.02	254,229.90	112,884.11	114,546.76
	sources:	sources:	sources:	sources:	sources:
	Vitria 8830.13	Vitria 154606	Vitria 85145.56	US Govt 104792.18	US Govt 114546.76
	Kellogg Huber 137221.31	Intuit (spouse) 136534.02	Intuit (spouse) 135441.81	(see note 1 for addtl	
			U.S. Govt 33642.53	sources)	
Fees	n/a	n/a	n/a	n/a	n/a
Royalties	n/a	n/a	n/a	n/a	n/a
Dividends	116.43	1,182.45	682.30	577.93	685.00
Interest	1,818.59	2,344.02	1,459.93	1,093.77	548.00
Gifts	n/a	n/a	n/a	n/a	n/a
Rents	n/a	n/a	n/a	n/a	n/a
Other:					
Jury Duty/Witness Pay	4.00	100.00	n/a	n/a	n/a
Total	147,990.46	294,766.49	256,372.13	114,555.81	115,779.76

NOTE 1: In 2003, I sold Vitria Technology stock purchased through the Vitria employee stock purchase plan while an employee of Vitria. I incurred a loss of 5664.55. However, 308.80 is reported as W-2 wages to reflect the fact this was purchased originally at a discount through an employee stock purchase plan. My spouse received income of 7783.13 reported as W-2 wages in 2003 from Intuit, Inc. to reflect vacation/sick pay and a stock gain incurred on the exercise of options acquired as an employee of Intuit, Inc.

ATTACHMENT 3

SF278 (Rev. 03/2000)
5 C.F.R. Part 2634
U.S. Office of Government Ethics

Form Approved
OMB No. 3209-0001

Executive Branch Personnel PUBLIC FINANCIAL DISCLOSURE REPORT

Date of Appointment, Candidacy, Election or Nomination (*Month, Day, Year*): 07/29/2002	Reporting Status (*Check appropriate boxes*): [X] Incumbent	Calendar Year Covered by Report: 2004	[ ] New Entrant, Nominee, or Candidate	[ ] Termination Filer	Termination Date (*If Applicable*) (*Month, Day, Year*):
Reporting Individual's Name	Last Name: Powell		First Name and Middle Initial: Benjamin		
Position for Which Filing	Title of Position: Associate Counsel to the President		Department or Agency (*If Applicable*): Executive Office of the President		
Location of Present Office (or forwarding address)	Address (*Number, Street, City, State, and ZIP Code*): Eisenhower Exec Off Building, Washington, DC 20502		Telephone No. (*Include Area Code*): 202-456-7909		
Position(s) Held with the Federal Government During the Preceding 12 Months (If Not Same as Above)	Title of Position(s) and Date(s) Held				
Presidential Nominees Subject to Senate Confirmation	Name of Congressional Committee Considering Nomination: Not Applicable		Do You Intend to Create a Qualified Diversified Trust? [ ] Yes [X] No		
Certification: I CERTIFY that the statements I have made on this form and all attached schedules are true, complete and correct to the best of my knowledge.	Signature of Reporting Individual: B. Benjamin Powell		Date (*Month, Day, Year*): May 16, 2005		
Other Review (If desired by agency)	Signature of Other Reviewer: Janice R. Smith		Date (*Month, Day, Year*): May 23, 2005		
Agency Ethics Official's Opinion: On the basis of information contained in this report, I conclude that the filer is in compliance with applicable laws and regulations (subject to any comments in box below).	Signature of Designated Agency Ethics Official/Reviewing Official: [signature]		Date (*Month, Day, Year*): 5/23/05		
Office of Government Ethics Use Only	Signature		Date (*Month, Day, Year*)		

Comments of Reviewing Officials (*If additional space is required, use the reverse side of this sheet*)

(*Check box if filing extension granted & indicate number of days* ____.) [ ]

(*Check box if comments are continued on the reverse side*) [ ]

Fee for Late Filing

Any individual who is required to file this report and does so more than 30 days after the date the report is required to be filed, or, if an extension is granted, more than 30 days after the last day of the filing extension period shall be subject to a $200 fee.

Reporting Periods

Incumbents: The reporting period is the preceding calendar year except Part II of Schedule C and Part I of Schedule D where you must also include the filing year up to the date you file. Part II of Schedule D is not applicable.

Termination Filers: The reporting period begins at the end of the period covered by your previous filing and ends at the date of termination. Part II of Schedule D is not applicable.

Nominees, New Entrants and Candidates for President and Vice President:

Schedule A--The reporting period for income (BLOCK C) is the preceding calendar year and the current calendar year up to the date of filing. Value assets as of any date you choose that is within 31 days of the date of filing.

Schedule B--Not applicable.

Schedule C, Part I (Liabilities)--The reporting period is the preceding calendar year and the current calendar year up to any date you choose that is within 31 days of the date of filing.

Schedule C, Part II (Agreements or Arrangements)-- Show any agreements or arrangements as of the date of filing.

Schedule D--The reporting period is the preceding two calendar years and the current calendar year up to the date of filing.

Agency Use Only

OGE Use Only

SF278 (Rev. 03/2000)
5 C.F.R. Part 2634
U.S. Office of Government Ethics

Reporting Individual's Name: Powell, Benjamin A.

SCHEDULE A

Page Number: 2

Assets and Income — BLOCK A

Valuation of Assets at close of reporting period — BLOCK B

Income: type and amount. If "None (or less than $201)" is checked, no other entry is needed in Block C for that item. — BLOCK C

For you, your spouse, and dependent children, report each asset held for investment or the production of income which had a fair market value exceeding $1,000 at the close of the reporting period, or which generated more than $200 in income during the reporting period, together with such income.

For yourself, also report the source and actual amount of earned income exceeding $200 (other than from the U.S. Government). For your spouse, report the source but not the amount of earned income of more than $1,000 (except report the actual acount of any honoraria over $200 of your spouse).

None ☐

	Assets and Income	None (or less than $1,001)	$1,001 - $15,000	$15,001 - $50,000	$50,001 - $100,000	$100,001 - $250,000	$250,001 - $500,000	$500,001 - $1,000,000	Over $1,000,000 *	$1,000,001 - $5,000,000	$5,000,001 - $25,000,000	$25,000,001 - $50,000,000	Over $50,000,000	Excepted Investment Fund	Excepted Trust	Qualified Trust	Type: Dividends	Type: Rent and Royalties	Type: Interest	Type: Capital Gains	Amount: None (or less than $201)	$201 - $1,000	$1,001 - $2,500	$2,501 - $5,000	$5,001 - $15,000	$15,001 - $50,000	$50,001 - $100,000	$100,001 - $1,000,000	Over $1,000,000*	$1,000,001 - $5,000,000	Over $5,000,000	Other Income (Specify Type & Actual Amount)	Date (Mo., Day, Yr.) Only if Honoraria
Examples	Central Airlines Common				x												x						x										
	Doe Jones & Smith, Hometown, State			x																												Law Partnership Income $130,000	
	Kempstone Equity Fund					x								x										x									
	IRA: Heartland 500 Index Fund							x						x											x								
1	USAA Bank Savings Acct.		X																X			X											
2	USAA Bank Checking Acct.		X																X		X												
	State Dept FCU Share Acct (S)			X															X			X											
4	Vitria Tech. 401 (k): Variable Annuity invested in JH Balanced Fund			X										X							X												
5	Vanguard Prime Money Mkt Fund (S)			X													X					X											
6	Janus Olympus Fund (S)		X											X																		Income Unascertianable	
7	Intuit Inc. 401(k): Fidelity Invest Grade Bond Fund (S)			X										X									X										

* This category applies only if the asset/income is solely that of the filer's spouse or dependent children. If the asset/income is either that of the filer or jointly held by the filer with the spouse or dependent children, mark the other higher categories of value, as appropriate.

Prior Editions Cannot be Used.

SF278 (Rev 03/2000)
5 C.F.R. Part 2634
U.S. Office of Government Ethics

Reporting Individual's Name: Powell, Benjamin A.

SCHEDULE A continued

(Use only if needed)

Page Number: 3

Assets and Income — BLOCK A

Valuation of Assets at close of reporting period — BLOCK B

Income: type and amount. If "None (or less than $201)" is checked, no other entry is needed in Block C for that item. — BLOCK C

None ☐

#	Assets and Income (BLOCK A)	None (or less than $1,001)	$1,001 - $15,000	$15,001 - $50,000	$50,001 - $100,000	$100,001 - $250,000	$250,001 - $500,000	$500,001 - $1,000,000	Over $1,000,000 *	$1,000,001 - $5,000,000	$5,000,001 - $25,000,000	$25,000,001 - $50,000,000	Over $50,000,000	Excepted Investment Fund	Excepted Trust	Qualified Trust	Type: Dividends	Type: Rent and Royalties	Type: Interest	Type: Capital Gains	Amount: None (or less than $201)	$201 - $1,000	$1,001 - $2,500	$2,501 - $5,000	$5,001 - $15,000	$15,001 - $50,000	$50,001 - $100,000	$100,001 - $1,000,000	Over $1,000,000*	$1,000,001 - $5,000,000	Over $5,000,000	Other Income (Specify Type & Actual Amount)	Date (Mo., Day, Yr.) Only if Honoraria
1	Intuit Inc. Common Stock (S)			X													X				X												
2	Janus IRA Enterprise Fund (s)	X												X																		Income Unascertainable	
3	Janus IRA Mercury (s)		X											X							X												
4	Schwab One Money Market Fund	X												X							X												
5	Wait Disney Co Common Stock		X														X				X												
6	Hewlett-Packard Co Comm Stock		X														X				X												
7	Kroger Co Comm Stock		X																		X												
8	Proctor & Gamble Co Common Stock		X														X					X											
9	Sun Microsystems Inc. Comm Stock		X																		X												

* This category applies only if the asset/income is solely that of the filer's spouse or dependent children. If the asset/income is either that of the filer or jointly held by the filer with the spouse or dependent children, mark the other higher categories of value, as appropriate.

Prior Editions Cannot be Used.

SF 278 (Rev. 03/2000)
5 C.F.R. Part 2634
U.S. Office of Government Ethics

Reporting Individual's Name: Powell, Benjamin A.

SCHEDULE A continued

(Use only if needed)

Page Number: 4

Assets and Income — BLOCK A

Valuation of Assets at close of reporting period — BLOCK B

Income: type and amount. If "None (or less than $201)" is checked, no other entry is needed in Block C for that item. — BLOCK C

None ☐

#	Assets and Income (BLOCK A)	None (or less than $1,001)	$1,001 - $15,000	$15,001 - $50,000	$50,001 - $100,000	$100,001 - $250,000	$250,001 - $500,000	$500,001 - $1,000,000	Over $1,000,000 *	$1,000,001 - $5,000,000	$5,000,001 - $25,000,000	$25,000,001 - $50,000,000	Over $50,000,000	Excepted Investment Fund	Excepted Trust	Qualified Trust	Type: Dividends	Type: Rent and Royalties	Type: Interest	Type: Capital Gains	Amount: None (or less than $201)	$201 - $1,000	$1,001 - $2,500	$2,501 - $5,000	$5,001 - $15,000	$15,001 - $50,000	$50,001 - $100,000	$100,001 - $1,000,000	Over $1,000,000*	$1,000,001 - $5,000,000	Over $5,000,000	Other Income (Specify Type & Actual Amount)	Date (Mo., Day, Yr.) Only if Honoraria
1	Transmeta Co. Comm. Stock		X																		X												
2	ABA Members Retirement Program 401 (k) underlying assets listed below:																																
3	A. Large Cap Growth Equity Fund		X											X																		Income Unascertainable	
4	B. Index Equity Fund		X											X																		Income Unascertainable	
5	C. Small Cap Equity Fund		X											X																		Income Unascertainable	
6	D. International Fund		X											X																		Income Unascertainable	
7																																	
8																																	
9																																	

* This category applies only if the asset/income is solely that of the filer's spouse or dependent children. If the asset/income is either that of the filer or jointly held by the filer with the spouse or dependent children, mark the other higher categ

Prior Editions Cannot be Used.

SF278 (Rev. 03/2000)
5 C.F.R Part 2634
U.S. Office of Government Ethics

Reporting Individual's Name: Powell, Benjamin A.

SCHEDULE A continued

(Use only if needed)

Page Number: 5

Assets and Income — BLOCK A

Valuation of Assets at close of reporting period — BLOCK B

Income: type and amount. If "None (or less than $201)" is checked, no other entry is needed in Block C for that item. — BLOCK C

None ☐

#	Assets and Income (BLOCK A)	None (or less than $1,001)	$1,001 - $15,000	$15,001 - $50,000	$50,001 - $100,000	$100,001 - $250,000	$250,001 - $500,000	$500,001 - $1,000,000	Over $1,000,000 *	$1,000,001 - $5,000,000	$5,000,001 - $25,000,000	$25,000,001 - $50,000,000	Over $50,000,000	Excepted Investment Fund	Excepted Trust	Qualified Trust	Type: Dividends	Type: Rent and Royalties	Type: Interest	Type: Capital Gains	Amount: None (or less than $201)	$201 - $1,000	$1,001 - $2,500	$2,501 - $5,000	$5,001 - $15,000	$15,001 - $50,000	$50,001 - $100,000	$100,001 - $1,000,000	Over $1,000,000*	$1,000,001 - $5,000,000	Over $5,000,000	Other Income (Specify Type & Actual Amount)	Date (Mo., Day, Yr.) Only if Honoraria
1	Clearly Gottlieb 401 (k) (S): underlying assets listed below																																
2	A. Fidelity Blue Chip		X											X							X												
3	B. Fidelity OTC Port		X											X							X												
4	C. Sit Mid Cap Growth		X											X							X												
5	D. Fidelity Short Term Bond		X											X								X											
6																																	
7																																	
8																																	
9																																	

* This category applies only if the asset/income is solely that of the filer's spouse or dependent children. If the asset/income is either that of the filer or jointly held by the filer with the spouse or dependent children, mark the other higher categ

Prior Editions Cannot be Used.

SF 278 (Rev. 03/2000)
5 C.F.R. Part 2634
U.S. Office of Government Ethics

Do not Complete Schedule B if you are a new entrant, nominee, Vice Presidential or Presidential Candidate

Reporting Individual's Name: Powell, Benjamin A.

SCHEDULE B

Page Number: 6

Part I: Transactions

None [x]

Report any purchase, sale, or exchange by you, your spouse, or dependent children during the reporting period of any real property, stocks, bonds, commodity futures, and other securities when the amount of the transaction exceeded $1,000. Include transactions that resulted in a loss. Do not report a transaction involving property used solely as your personal residence, or a transaction solely between you, your spouse, or dependent child. Check the "Certificate of divestiture" block to indicate sales made pursuant to a certificate of divestiture from OGE.

	Identification of Assets	Transaction Type (x): Purchase	Sale	Exchange	Date (Mo., Day, Yr.)	Amount of Transaction (x): $1,001 - $15,000	$15,001 - $50,000	$50,001 - $100,000	$100,001 - $250,000	$250,001 - $500,000	$500,001 - $1,000,000	Over $1,000,000*	$1,000,001 - $5,000,000	$5,000,001 - $25,000,000	$25,000,001 - $50,000,000	Over $50,000,000	Certificate of divestiture
Example	Central Airlines Common	x			2/1/99			x									
1																	
2																	
3																	
4																	
5																	
6																	

* This category applies only if the underlying asset is solely that of the filer's spouse or dependent children. If the underlying asset is either held by the filer or jointly held by the filer with the spouse or dependent children, use the other higher categories of value, as appropriate.

Part II: Gifts, Reimbursements, and Travel Expenses

For you, your spouse and dependent children, report the source, a brief description, and the value of: (1) gifts (such as tangible items, transportation, lodging, food, or entertainment) received from one source totaling more than $260; and (2) travel-related cash reimbursements received from one source totaling more than $260. For conflicts analysis, it is helpful to indicate a basis for receipt, such as personal friend, agency approval under 5 U.S.C. § 4111 or other statutory authority, etc. For travel-related gifts and reimbursements, include travel itinerary, dates, and the nature of expenses provided. **Exclude** anything given to you by the U.S. Government; given to your agency in connection with official travel; received from relatives; received by your spouse or dependent child totally independent of their relationship to you; or provided as personal hospitality at the donor's residence. Also, for purposes of aggregating gifts to determine the total value from one source, exclude items worth $104 or less. See instructions for other exclusions.

None [x]

	Source (Name and Address)	Brief Description	Value
Examples	Nat'l Assn. of Rock Collectors, NY, NY	Airline ticket, hotel room & meals incident to national conference 6/15/99 (personal activity unrelated to duty)	$500
	Frank Jones, San Francisco, CA	Leather briefcase (personal friend)	$300
1			
2			
3			
4			
5			

Prior Editions Cannot Be Used.

SF 278 (Rev. 03/2000)
5 C.F.R Part 2634
U.S. Office of Government Ethics

Reporting Individual's Name	SCHEDULE C	Page Number
Powell, Benjamin A.		7

Part I: Liabilities

Report liabilities over $10,000 owed to any one creditor at **any time** during the reporting period by you, your spouse, or dependent children. Check the highest amount owed during the reporting period. **Exclude** a mortgage on your personal residence unless it is rented out; loans secured by automobiles, household furniture or appliances; and liabilities owed to certain relatives listed in instructions. See instructions for revolving charge accounts.

None [x]

	Creditors (Name and Address)	Type of Liability	Date Incurred	Interest Rate	Term if applicable	$10,001 - $15,000	$15,001 - $50,000	$50,001 - $100,000	$100,001 - $250,000	$250,001 - $500,000	$500,001 - $1,000,000	Over $1,000,000*	$1,000,001 - $5,000,000	$5,000,001 - $25,000,000	$25,000,001 - $50,000,000	Over $50,000,000
Examples:	First District Bank, Washington, DC	Mortgage on rental property, Delaware	1991	8%	25 yrs											
	John Jones, 123 1St., Washington, DC	Promissory note	1999	10%	on demand			X		X						
1																
2																
3																
4																
5																

Category of Amount or Value (x)

* This category applies only if the liability is solely that of the filer's spouse or dependent children. If the liability is that of the filer or a joint liability of the filer with the spouse or dependent children, mark the other higher categories, as appropriate.

Part II: Agreements or Arrangements

Report your agreements or arrangements for: continuing participation in an employee benefit plan (e.g. 401k, deferred compensation; (2) continuation payment by a former employer (including severance payments); (3) leaves of absence; and (4) future employment. See instructions regarding the reporting of negotiations for any of these arrangements or benefits.

None [ ]

	Status and Terms of any Agreement or Arrangement	Parties	Date
Example:	Pursuant to partnership agreement, will receive lump sum payment of capital account & partnership share calculated on service performed through 1/00	Doe Jones & Smith, Hometown, State	7/85
1	ABA Members Retirement Program 401(k) - (Terminated-no further contributions by filer or employer)	Kellogg, Huber, Hansen, Todd-Law Firm	12/98
2	Vitria, Tech.- Manulife 401(k) (Terminated -no further contrubutions by filer or employer)	Vitria Technology, Inc.	2000
3			
4			
5			
6			

Prior Editions Cannot Be Used.

SF 278 (Rev. 03/2000)
5 C.F.R. Part 2634
U.S. Office of Government Ethics

Reporting Individual's Name	SCHEDULE D	Page Number
Powell, Benjamin A.		8

Part I: Positions Held Outside U.S. Government

Report any positions held during the applicable reporting period, whether compensated or not. Positions include but are not limited to those of an officer, director, trustee, general partner, proprietor, representative, employee, or consultant of any corporation, firm, partnership, or other business enterprise or any non-profit organization or educational institution. **Exclude** positions with religious, social, fraternal, or political entities and those solely of an honorary nature.

None [X]

	Organization (*Name and Address*)	Type of Organization	Position Held	From (Mo., Yr.)	To (Mo., Yr.)
Examples:	Nat'l Assn. of Rock Collectors, NY, NY	Non-profit education	President	6/92	Present
	Doe Jones & Smith, Hometown, State	Law firm	Partner	7/85	1/00
1					
2					
3					
4					
5					
6					

Part II: Compensation In Excess Of $5,000 Paid by One Source

Report sources of more than $5,000 compensation received by you or your business affiliation for services provided directly by you during any one year of the reporting period. This includes the names of clients and customers of any corporation, firm, partnership, or other business enterprise, or any other non-profit organization when you directly provided the services generating a fee or payment of more than $5,000. You need not report the U.S. Government as a source.

Do not complete this part if you are an Incumbent, Termination Filer, or Vice Presidential or Presidential Candidate

None [ ]

	Source (*Name and Address*)	Brief Description of Duties
Examples:	Doe Jones & Smith, Hometown, State	Legal services
	Metro University (client of Doe Jones & Smith), Moneytown, State	Legal services in connection with university construction
1		
2		
3		
4		
5		
6		

Prior Editions Cannot Be Used.

SF 278 (Rev. 03/2000)
5 C.F.R. Part 2634
U.S. Office of Government Ethics

Form Approved
OMB No. 3209-0001

Executive Branch Personnel PUBLIC FINANCIAL DISCLOSURE REPORT

Date of Appointment, Candidacy, Election or Nomination (*Month, Day, Year*): 7/29/02	Reporting Status (*Check appropriate boxes*)	Incumbent [X]	Calendar Year Covered by Report: 2003	New Entrant, Nominee, or Candidate [ ]	Termination Filer [ ] — Termination Date (*If Applicable*) (*Month, Day, Year*):
Reporting Individual's Name	Last Name: POWELL			First Name and Middle Initial: Benjamin A.	
Position for Which Filing	Title of Position: Special Assistant to the President/ Associate Counsel to the President			Department or Agency (*If Applicable*): The White House	
Location of Present Office (or forwarding address)	Address (*Number, Street, City, State, and ZIP Code*): Eisenhower Executive Office Building, Washington, DC 20502			Telephone No. (*Include Area Code*): (202) 456-7909	
Position(s) Held with the Federal Government During the Preceding 12 Months (If Not Same as Above)	Title of Position(s) and Date(s) Held				
Presidential Nominees Subject to Senate Confirmation	Name of Congressional Committee Considering Nomination			Do You Intend to Create a Qualified Diversified Trust? [ ] Yes [ ] No	
Certification I CERTIFY that the statements I have made on this form and all attached schedules are true, complete and correct to the best of my knowledge.	Signature of Reporting Individual: Benjamin A. Powell			Date (*Month, Day, Year*): 17 May 2004	
Other Review (If desired by agency)	Signature of Other Reviewer: Jenny King			Date (*Month, Day, Year*): 5/17/04	
Agency Ethics Official's Opinion On the basis of information contained in this report, I conclude that the filer is in compliance with applicable laws and regulations (subject to any comments on the box below).	Signature of Designated Agency Ethics Official/Reviewing Official: Marilyn L. Glynn			Date (*Month, Day, Year*): 5/17/04	
Office of Government Ethics Use Only	Signature			Date (*Month, Day, Year*)	

Comments of Reviewing Officials (*If additional space is required, use the reverse side of this sheet*)

(*Check box if filing extension granted & indicate number of days* ____) [ ]

(*Check box if comments are continued on the reverse side*) [ ]

Fee for Late Filing
Any individual who is required to file this report and does so more than 30 days after the date the report is required to be filed, or, if an extension is granted, more than 30 days after the last day of the filing extension period shall be subject to a $200 fee.

Reporting Periods
Incumbents: The reporting period is the preceding calendar year except Part II of Schedule C and Part I of Schedule D where you must also include the filing year up to the date you file. Part II of Schedule D is not applicable.

Termination Filers: The reporting period begins at the end of the period covered by your previous filing and ends at the date of termination. Part II of Schedule D is not applicable.

Nominees, New Entrants and Candidates for President and Vice President:

Schedule A–The reporting period for income (BLOCK C) is the preceding calendar year and the current calendar year up to the date of filing. Value assets as of any date you choose that is within 31 days of the date of filing.

Schedule B–Not applicable.

Schedule C, Part I (Liabilities)–The reporting period is the preceding calendar year and the current calendar year up to any date you choose that is within 31 days of the date of filing.

Schedule C, Part II (Agreements or Arrangements)– Show any agreements or arrangements as of the date of filing.

Schedule D–The reporting period is the preceding two calendar years and the current calendar year up to the date of filing.

Agency Use Only
MAY 17 2004

OGE Use Only

SF 278 (Rev. 03/2000)
5 C F R Part 2634
U.S. Office of Government Ethics

Reporting Individual's Name: POWELL, Benjamin A.

SCHEDULE A

Page Number: 2

Assets and Income — BLOCK A

For you, your spouse, and dependent children, report each asset held for investment or the production of income which had a fair market value exceeding $1,000 at the close of the reporting period, or which generated more than $200 in income during the reporting period, together such income.

For yourself, also report the source and actual amount of earned income exceeding $200 (other than from the U.S. Government). For your spouse, report the source but not the amount of earned income of more than $1,000 (except report the actual acount of any honoraria over $200 of your spouse).

None ☐

Valuation of Assets at close of reporting period — BLOCK B

Income: type and amount. If "None (or less than $201)" is checked, no other entry is needed in Block C for that item. — BLOCK C

Assets and Income	None (or less than $1,001)	$1,001 - $15,000	$15,001 - $50,000	$50,001 - $100,000	$100,001 - $250,000	$250,001 - $500,000	$500,001 - $1,000,000	Over $1,000,000 *	$1,000,001 - $5,000,000	$5,000,001 - $25,000,000	$25,000,001 - $50,000,000	Over $50,000,000	Excepted Investment Fund	Excepted Trust	Qualified Trust	Type: Dividends	Type: Rent and Royalties	Type: Interest	Type: Capital Gains	Amount: None (or less than $201)	$201 - $1,000	$1,001 - $2,500	$2,501 - $5,000	$5,001 - $15,000	$15,001 - $50,000	$50,001 - $100,000	$100,001 - $1,000,000	Over $1,000,000*	$1,000,001 - $5,000,000	Over $5,000,000	Other Income (Specify Type & Actual Amount)	Date (Mo., Day, Yr.) Only if Honoraria
Examples: Central Airlines Common				X												X						X										
Examples: Doe Jones & Smith, Hometown, State			X																												Law Partnership Income $10,000	
Examples: Kempstone Equity Fund					X								X										X									
Examples: IRA: Heartland 500 Index Fund							X						X											X								
1 Intuit Common Stock Options (exercised and sold)	X																		X				X									
2 USAA Bank Savings Account		X																X			X											
USAA Bank Checking Account		X																X		X												
4 State Dept FCU Share Acct (Spouse)			X															X			X											
5 Manulife 401(k): Manulife Lifestyle Balanced Fund			X										X							X												
6 Wells Fargo Savings (Spouse)	X																	X		X												

* This category applies only if the asset/income is solely that of the filer's spouse or dependent children. If the asset/income is either that of the filer or jointly held by the filer with the spouse or dependent children, mark the other higher categories of value, as appropriate.

Prior Editions Cannot be Used.

NF278 (Rev 03/2000)
5 C.F.R Part 2634
U.S. Office of Government Ethics

Reporting Individual's Name: POWELL, Benjamin A.

SCHEDULE A continued

(Use only if needed)

Page Number: 3

Assets and Income — BLOCK A

None ☐

Valuation of Assets at close of reporting period — BLOCK B

Income: type and amount. If "None (or less than $201)" is checked, no other entry is needed in Block C for that item. — BLOCK C

#	Assets and Income (BLOCK A)	None (or less than $1,001)	$1,001 - $15,000	$15,001 - $50,000	$50,001 - $100,000	$100,001 - $250,000	$250,001 - $500,000	$500,001 - $1,000,000	Over $1,000,000 *	$1,000,001 - $5,000,000	$5,000,001 - $25,000,000	$25,000,001 - $50,000,000	Over $50,000,000	Excepted Investment Fund	Excepted Trust	Qualified Trust	Type: Dividends	Type: Rent and Royalties	Type: Interest	Type: Capital Gains	Amount: None (or less than $201)	$201 - $1,000	$1,001 - $2,500	$2,501 - $5,000	$5,001 - $15,000	$15,001 - $50,000	$50,001 - $100,000	$100,001 - $1,000,000	Over $1,000,000*	$1,000,001 - $5,000,000	Over $5,000,000	Other Income (Specify Type & Actual Amount)	Date (Mo., Day, Yr.) Only if Honoraria
1	Wells Fargo Checking (Spouse)		X																X		X												
2	Vanguard Prime Money Market Fund (Spouse)			X													X					X											
3	Janus Olympus Fund (Spouse)		X											X							X												
4	Fidelity 401(k) (Spouse): Invest Gr Bond Fund			X										X									X										
5	Intuit Inc Common Stock (Spouse)			X																	X												
6																																	
7																																	
8																																	
9																																	

* This category applies only if the asset/income is solely that of the filer's spouse or dependent children. If the asset/income is either that of the filer or jointly held by the filer with the spouse or dependent children, mark the other higher categories of value, as appropriate

Prior Editions Cannot be Used.

SF 278 (Rev. 03/2000)
5 C.F.R Part 2634
U.S. Office of Government Ethics

Reporting Individual's Name: POWELL, Benjamin A.

SCHEDULE A continued

(Use only if needed)

Page Number: 4

Assets and Income — BLOCK A

Valuation of Assets at close of reporting period — BLOCK B

Income: type and amount. If "None (or less than $201)" is checked, no other entry is needed in Block C for that item. — BLOCK C

None ☐

#	Assets and Income (Block A)	None (or less than $1,001)	$1,001 - $15,000	$15,001 - $50,000	$50,001 - $100,000	$100,001 - $250,000	$250,001 - $500,000	$500,001 - $1,000,000	Over $1,000,000 *	$1,000,001 - $5,000,000	$5,000,001 - $25,000,000	$25,000,001 - $50,000,000	Over $50,000,000	Excepted Investment Fund	Excepted Trust	Qualified Trust	Type: Dividends	Type: Rent and Royalties	Type: Interest	Type: Capital Gains	Amount: None (or less than $201)	$201 - $1,000	$1,001 - $2,500	$2,501 - $5,000	$5,001 - $15,000	$15,001 - $50,000	$50,001 - $100,000	$100,001 - $1,000,000	Over $1,000,000*	$1,000,001 - $5,000,000	Over $5,000,000	Other Income (Specify Type & Actual Amount)	Date (Mo., Day, Yr.) Only if Honoraria
1	Janus Enterprise Fund (IRA) (Spouse)	X												X							X												
2	Janus IRA Mercury (Spouse)	X												X							X												
3	Schwab One Money Market Fund	X												X					X			X											
4	Walt Disney Co. (Common Stock)		X														X				X												
5	Hewlett Packard Co (Common Stock)		X														X				X												
6	Kroger Co (Common Stock)		X																		X												
7	Procter & Gamble Co. (Common Stock)		X														X				X												
8	Sun Microsystems Inc (Common Stock)		X																		X												
9	Transmeta Co. (Common Stock)		X																		X												

* This category applies only if the asset/income is solely that of the filer's spouse or dependent children. If the asset/income is either that of the filer or jointly held by the filer with the spouse or dependent children, mark the other higher categories of value, as appropriate.

Prior Editions Cannot be Used.

SF278 (Rev. 03/2000)
5 C.F.R. Part 2634
U.S. Office of Government Ethics

Reporting Individual's Name: POWELL, Benjamin A.

SCHEDULE A continued

(Use only if needed)

Assets and Income — BLOCK A

Valuation of Assets at close of reporting period — BLOCK B

Income: type and amount. If "None (or less than $201)" is checked, no other entry is needed in Block C for that item. — BLOCK C

None ☐

#	Assets and Income (BLOCK A)	None (or less than $1,001)	$1,001 - $15,000	$15,001 - $50,000	$50,001 - $100,000	$100,001 - $250,000	$250,001 - $500,000	$500,001 - $1,000,000	Over $1,000,000 *	$1,000,001 - $5,000,000	$5,000,001 - $25,000,000	$25,000,001 - $50,000,000	Over $50,000,000	Excepted Investment Fund	Excepted Trust	Qualified Trust	Type: Dividends	Type: Rent and Royalties	Type: Interest	Type: Capital Gains	Amount: None (or less than $201)	$201 - $1,000	$1,001 - $2,500	$2,501 - $5,000	$5,001 - $15,000	$15,001 - $50,000	$50,001 - $100,000	$100,001 - $1,000,000	Over $1,000,000*	$1,000,001 - $5,000,000	Over $5,000,000	Other Income (Specify Type & Actual Amount)	Date (Mo., Day, Yr.) Only if Honoraria
1	ABA Members Retirement Program 401(k):																																
2	-- Large Cap Growth Equity Fund		X											X							X												
3	-- Index Equity Fund		X											X							X												
4	-- Small Cap Equity Fund		X											X							X												
5	-- International Equity Fund		X											X							X												
6																																	
7																																	
8																																	
9																																	

* This category applies only if the asset/income is solely that of the filer's spouse or dependent children. If the asset/income is either that of the filer or jointly held by the filer with the spouse or dependent children, mark the other higher categ

Prior Editions Cannot be Used.

SF278 (Rev. 03/2000)
5 C.F.R. Part 2634
U.S. Office of Government Ethics

Reporting Individual's Name: POWELL, Benjamin A.

SCHEDULE A continued

(Use only if needed)

Page Number: 6

Assets and Income — BLOCK A

Valuation of Assets at close of reporting period — BLOCK B

Income: type and amount. If "None (or less than $201)" is checked, no other entry is needed in Block C for that item. — BLOCK C

None ☐

#	Assets and Income (BLOCK A)	None (or less than $1,001)	$1,001 - $15,000	$15,001 - $50,000	$50,001 - $100,000	$100,001 - $250,000	$250,001 - $500,000	$500,001 - $1,000,000	Over $1,000,000 *	$1,000,001 - $5,000,000	$5,000,001 - $25,000,000	$25,000,001 - $50,000,000	Over $50,000,000	Excepted Investment Fund	Excepted Trust	Qualified Trust	Type: Dividends	Type: Rent and Royalties	Type: Interest	Type: Capital Gains	Amount: None (or less than $201)	$201 - $1,000	$1,001 - $2,500	$2,501 - $5,000	$5,001 - $15,000	$15,001 - $50,000	$50,001 - $100,000	$100,001 - $1,000,000	Over $1,000,000*	$1,000,001 - $5,000,000	Over $5,000,000	Other Income (Specify Type & Actual Amount)	Date (Mo., Day, Yr.) Only if Honoraria
1	Fidelity Cleary Gottlieb 401(k):																																
2	A. Fidelity Blue Chip		x											x							x												
3	B. Fidelity OTC Port		x											x							x												
4	C. Sit Mid Cap Growth		x											x							x												
5	D. Fidelity Sh Term Bond		x											x							x												
6																																	
7																																	
8																																	
9																																	

* This category applies only if the asset/income is solely that of the filer's spouse or dependent children. If the asset/income is either that of the filer or jointly held by the filer with the spouse or dependent children, mark the other higher categ.

Prior Editions Cannot be Used.

SF 278 (Rev. 03/2000)
5 C F R Part 2634
U.S. Office of Government Ethics

Do not Complete Schedule B if you are a new entrant, nominee, Vice Presidential or Presidential Candidate

Reporting Individual's Name: POWELL, Benjamin A.

SCHEDULE B

Page Number: 7

Part I: Transactions

None ☐

Report any purchase, sale, or exchange by you, your spouse, or dependent children during the reporting period of any real property, stocks, bonds, commodity futures, and other securities when the amount of the transaction exceeded $1,000. Include transactions that resulted in a loss. Do not report a transaction involving property used solely as your personal residence, or a transaction solely between you, your spouse, or dependent child. Check the "Certificate of divestiture" block to indicate sales made pursuant to a certificate of divestiture from OGE.

	Identification of Assets	Transaction Type (x): Purchase	Sale	Exchange	Date (Mo., Day, Yr.)	Amount of Transaction (x): $1,001 - $15,000	$15,001 - $50,000	$50,001 - $100,000	$100,001 - $250,000	$250,001 - $500,000	$500,001 - $1,000,000	Over $1,000,000*	$1,000,001 - $5,000,000	$5,000,001 - $25,000,000	$25,000,001 - $50,000,000	Over $50,000,000	Certificate of Divestiture
	Example: Central Airlines Common	x			2/1/99			x									
	Intuit Common Stock Options Exercised	X			5/27/03		X										
	Intuit Common Stock - Stock Sold from Options Exercised		X		5/27/03		X										
3	Vitria Technology, Inc. Common Stock		x		7/14/03	x											
4																	
5																	

* This category applies only if the underlying asset is solely that of the filer's spouse or dependent children. If the underlying asset is either held by the filer or jointly held by the filer with the spouse or dependent children, use the other higher categories of value, as appropriate.

Part II: Gifts, Reimbursements, and Travel Expenses

For you, your spouse and dependent children, report the source, a brief description, and the value of: (1) gifts (such as tangible items, transportation, lodging, food, or entertainment) received from one source totaling more than $260; and (2) travel-related cash reimbursements received from one source totaling more than $260. For conflicts analysis, it is helpful to indicate a basis for receipt, such as personal friend, agency approval under 5 U.S.C. § 4111 or other statutory authority, etc. For travel-related gifts and reimbursements, include travel itinerary, dates, and the nature of expenses provided. **Exclude** anything given to you by the U.S. Government; given to your agency in connection with official travel; received from relatives; received by your spouse or dependent child totally independent of their relationship to you; or provided as personal hospitality at the donor's residence. Also, for purposes of aggregating gifts to determine the total value from one source, exclude items worth $104 or less. See instructions for other exclusions.

None ☒

	Source (Name and Address)	Brief Description	Value
Examples	Nat'l Assn. of Rock Collectors, NY, NY	Airline ticket, hotel room & meals incident to national conference 6/15/99 (personal activity unrelated to duty)	$500
	Frank Jones, San Francisco, CA	Leather briefcase (personal friend)	$300
1			
2			
3			
4			
5			

Prior Editions Cannot Be Used.

SF 278 (Rev. 03/2000)
5 C.F.R Part 2634
U.S. Office of Government Ethics

Do not Complete Schedule B if you are a new entrant, nominee, or Vice Presidential or Presidential Candidate

Reporting Individual's Name: POWELL, Benjamin A.

SCHEDULE B continued
(Use only if needed)

Page Number: 8

Part I: Transactions

	Identification of Assets	Transaction Type (x): Purchase	Sale	Exchange	Date (Mo., Day, Yr.)	Amount of Transaction (x): $1,001 - $15,000	$15,001 - $50,000	$50,001 - $100,000	$100,001 - $250,000	$250,001 - $500,000	$500,001 - $1,000,000	Over $1,000,000*	$1,000,001 - $5,000,000	$5,000,001 - $25,000,000	$25,000,001 - $50,000,000	Over $50,000,000	Certificate of divestiture
	Example: Central Airlines Common	x			2/1/99			x									
1																	
2																	
3																	
4																	
5																	
6																	
7																	
8																	
9																	
10																	
11																	
12																	
13																	
14																	
15																	
16																	

* This category applies only if the underlying asset is solely that of the filer's spouse or dependent children. If the underlying asset is either held by the filer or jointly held by the filer with the spouse or dependent children, use the other higher categories of value, as appropriate.

Prior Editions Cannot Be Used.

SF278 (Rev. 03/2000)
5 CFR Part 2634
U.S. Office of Government Ethics

Reporting Individual's Name: POWELL, Benjamin A.

SCHEDULE C

Page Number: 9

Part I: Liabilities

Report liabilities over $10,000 owed to any one creditor at **any time** during the reporting period by you, your spouse, or dependent children. Check the highest amount owed during the reporting period. **Exclude** a mortgage on your personal residence unless it is rented out; loans secured by automobiles, household furniture or appliances; and liabilities owed to certain relatives listed in instructions. See instructions for revolving charge accounts.

None [X]

	Creditors (Name and Address)	Type of Liability	Date Incurred	Interest Rate	Term if applicable	$10,001 - $15,000	$15,001 - $50,000	$50,001 - $100,000	$100,001 - $250,000	$250,001 - $500,000	$500,001 - $1,000,000	Over $1,000,000*	$1,000,001 - $5,000,000	$5,000,001 - $25,000,000	$25,000,001 - $50,000,000	Over $50,000,000
F ilies:	First District Bank, Washington, DC	Mortgage on rental property, Delaware	1991	8%	25 yrs.			X								
	John Jones, 123 J St., Washington, DC	Promissory note	1999	10 %	on demand					X						
1																
2																
3																
4																
5																

Category of Amount or Value (x)

* This category applies only if the liability is solely that of the filer's spouse or dependent children. If the liability is that of the filer or a joint liability of the filer with the spouse or dependent children, mark the other higher categories, as appropriate.

Part II: Agreements or Arrangements

Report your agreements or arrangements for: continuing participation in an employee benefit plan (e.g. 401k, deferred compensation; (2) continuation payment by a former employer (including severance payments); (3) leaves of absence; and (4) future employment. See instructions regarding the reporting of negotiations for any of these arrangements or benefits.

None [X]

	Status and Terms of any Agreement or Arrangement	Parties	Date
Example:	Pursuant to partnership agreement, will receive lump sum payment of capital account & partnership share calculated on service performed through 1/00.	Doe Jones & Smith, Hometown, State	7/85
1			
2			
3			
4			
5			
6			

Prior Editions Cannot Be Used.

SF 278 (Rev. 03/2000)
5 C.F.R. Part 2634
U.S. Office of Government Ethics

Reporting Individual's Name	SCHEDULE D	Page Number
POWELL, Benjamin A.		10

Part I: Positions Held Outside U.S. Government

Report any positions held during the applicable reporting period, whether compensated or not. Positions include but are not limited to those of an officer, director, trustee, general partner, proprietor, representative, employee, or consultant of any corporation, firm, partnership, or other business enterprise or any non-profit organization or educational institution. **Exclude** positions with religious, social, fraternal, or political entities and those solely of an honorary nature.

None [X]

	Organization (*Name and Address*)	Type of Organization	Position Held	From (Mo., Yr.)	To (Mo., Yr.)
Examples:	Nat'l Assn. of Rock Collectors, NY, NY	Non-profit education	President	6/92	Present
	Doe Jones & Smith, Hometown, State	Law firm	Partner	7/85	1/90
1					
2					
3					
4					
5					
6					

Part II: Compensation In Excess Of $5,000 Paid by One Source

Report sources of more than $5,000 compensation received by you or your business affiliation for services provided directly by you during any one year of the reporting period. This includes the names of clients and customers of any corporation, firm, partnership, or other business enterprise, or any other non-profit organization when you directly provided the services generating a fee or payment of more than $5,000. You need not report the U.S. Government as a source.

Do not complete this part if you are an Incumbent, Termination Filer, or Vice Presidential or Presidential Candidate

None [ ]

	Source (*Name and Address*)	Brief Description of Duties
Examples:	Doe Jones & Smith, Hometown, State	Legal services
	Metro University (client of Doe Jones & Smith), Moneytown, State	Legal services in connection with university construction
1		
2		
3		
4		
5		
6		

Prior Editions Cannot Be Used.

SF 278 (Rev. 03/2000)
5 C.F.R. Part 2634
U.S. Office of Government Ethics

Executive Branch Personnel PUBLIC FINANCIAL DISCLOSURE REPORT

Form Approved:
OMB No. 3209 - 0001

Date of Appointment, Candidacy, Election, or Nomination *(Month, Day, Year)*	Reporting Status (Check Appropriate Boxes)	Incumbent	Calendar Year Covered by Report	New Entrant, Nominee, or Candidate	Termination Filer / Termination Date *(If Applicable)(Month, Day, Year)*
7/29/02		[x]	2002	[ ]	[ ]

Reporting Individual's Name	Last Name: Powell	First Name and Middle Initial: Benjamin A
Position for Which Filing	Title of Position: Associate Counsel to the President	Department or Agency *(If Applicable)*: Executive Office of the President
Location of Present Office (or forwarding address)	Address *(Number, Street, City, State, and ZIP Code)*: Eisenhower Exec Off Building, Washington, DC 20502	Telephone No. *(Include Area Code)*: 202-456-7909
Position(s) Held with the Federal Government During the Preceding 12 Months *(If Not Same as Above)*	Title of Position(s) and Date(s) Held: None	
Presidential Nominees Subject to Senate Confirmation	Name of Congressional Committee Considering Nomination: Not Applicable	Do You Intend to Create a Qualified Diversified Trust? [ ] Yes [ ] No

Certification I CERTIFY that the statements I have made on this form and all attached schedules are true, complete and correct to the best of my knowledge.	Signature of Reporting Individual: [signature]	Date *(Month, Day, Year)*: 27 June 03
Other Review (If desired by agency)	Signature of Other Reviewer: [signature]	Date *(Month, Day, Year)*: 7-24-03
Agency Ethics Official's Opinion On the basis of information contained in this report, I conclude that the filer is in compliance with applicable laws and regulations (subject to any comments in the box below).	Signature of Designated Agency Ethics Official/Reviewing Official: [signature]	Date *(Month, Day, Year)*: 7/27/03
Office of Government Ethics Use Only	Signature:	Date *(Month, Day, Year)*:

Comments of Reviewing Officials *(If additional space is required, use the reverse side of this sheet)*

(Check box if filing extension granted & indicate number of days 45 *)* [✓]

(Check box if comments are continued on the reverse side) [ ]

Fee for Late Filing
Any individual who is required to file this report and does so more than 30 days after the date the report is required to be filed, or, if an extension is granted, more than 30 days after the last day of the filing extension period, shall be subject to a $200 fee.

Reporting Periods
Incumbents: The reporting period is the preceding calendar year except Part II of Schedule C and Part I of Schedule D where you must also include the filing year up to the date you file. Part II of Schedule D is not applicable.

Termination Filers: The reporting period begins at the end of the period covered by your previous filing and ends at the date of termination. Part II of Schedule D is not applicable.

Nominees, New Entrants and Candidates for President and Vice President:

Schedule A--The reporting period for income (BLOCK C) is the preceding calendar year and the current calendar year up to the date of filing. Value assets as of any date you choose that is within 31 days of the date of filing.

Schedule B--Not applicable.

Schedule C, Part I (Liabilities)--The reporting period is the preceding calendar year and the current calendar year up to any date you choose that is within 31 days of the date of filing.

Schedule C, Part II (Agreements or Arrangements)--Show any agreements or arrangements as of the date of filing.

Schedule D--The reporting period is the preceding **two** calendar years and the current calendar year up to the date of filing.

Agency Use Only
6-27-03 MJV.
OGE Use Only

Supersedes Prior Editions, Which Cannot Be Used.

278-112

NSN 7540-01-070-8444

SF 278 (Rev. 03/2000)
5 C.F.R. Part 2634
U.S. Office of Government Ethics

Reporting Individual's Name: Powell, Benjamin A

SCHEDULE A

Assets and Income — BLOCK A

For you, your spouse, and dependent children, report each asset held for investment or the production of income which had a fair market value exceeding $1,000 at the close of the reporting period, or which generated more than $200 in income during the reporting period, together with such income.

For yourself, also report the source and actual amount of earned income exceeding $200 (other than from the U.S. Government). For your spouse, report the source but not the amount of earned income of more than $1,000 (except report the actual amount of any honoraria over $200 of your spouse).

None ☐

Valuation of Assets at close of reporting period — BLOCK B

Income: type and amount. If "None (or less than $201)" is checked, no other entry is needed in Block C for that item. — BLOCK C

	Assets and Income	None (or less than $1,001)	$1,001 - $15,000	$15,001 - $50,000	$50,001 - $100,000	$100,001 - $250,000	$250,001 - $500,000	$500,001 - $1,000,000	Over $1,000,000*	$1,000,001 - $5,000,000	$5,000,001 - $25,000,000	$25,000,001 - $50,000,000	Over $50,000,000	Excepted Investment Fund	Excepted Trust	Qualified Trust	Type: Dividends	Type: Rent and Royalties	Type: Interest	Type: Capital Gains	Amount: None (or less than $201)	$201 - $1,000	$1,001 - $2,500	$2,501 - $5,000	$5,001 - $15,000	$15,001 - $50,000	$50,001 - $100,000	$100,001 - $1,000,000	Over $1,000,000*	$1,000,001 - $5,000,000	Over $5,000,000	Other Income (Specify Type & Actual Amount)	Date (Mo., Day, Yr.) Only if Honoraria
Examples	Central Airlines Common				x												x						x										
	Doe Jones & Smith, Hometown, State			x																												Law Partnership Income $130,000	
	Kempstone Equity Fund					x								x										x									
	IRA: Heartland 500 Index Fund							x						x											x								
1	Vitria Technology, Inc., Sunnyvale, CA																															Salary: 84666('02)	
2	Intuit, Inc., Mountain View, CA (S)																															Salary	
3	USAA Bank Savings Acct			x															x					x									
4	USAA Bank Checking Acct		x																x		x												
5	State Dept FCU Share Acct (S)		x																		x												
6	Manulife 401(k): Manulife Lifestyle Balanced Fund			x										x							x												

* This category applies only if the asset/income is solely that of the filer's spouse or dependent children. If the asset/income is either that of the filer or jointly held by the filer with the spouse or dependent children, mark the other higher categories of value, as appropriate.

Prior Editions Cannot Be Used.

SF 278 (Rev. 03/2000)
5 C.F.R. Part 2634
U.S. Office of Government Ethics

Reporting Individual's Name: Powell, Benjamin A

SCHEDULE A continued
(Use only if needed)

Assets and Income — BLOCK A

Valuation of Assets at close of reporting period — BLOCK B

Income: type and amount. If "None (or less than $201)" is checked, no other entry is needed in Block C for that item. — BLOCK C

#	Assets and Income (BLOCK A)	None (or less than $1,001)	$1,001 - $15,000	$15,001 - $50,000	$50,001 - $100,000	$100,001 - $250,000	$250,001 - $500,000	$500,001 - $1,000,000	Over $1,000,000*	$1,000,001 - $5,000,000	$5,000,001 - $25,000,000	$25,000,001 - $50,000,000	Over $50,000,000	Excepted Investment Fund	Excepted Trust	Qualified Trust	Type: Dividends	Type: Rent and Royalties	Type: Interest	Type: Capital Gains	Amount: None (or less than $201)	$201 - $1,000	$1,001 - $2,500	$2,501 - $5,000	$5,001 - $15,000	$15,001 - $50,000	$50,001 - $100,000	$100,001 - $1,000,000	Over $1,000,000*	$1,000,001 - $5,000,000	Over $5,000,000	Other Income (Specify Type & Actual Amount)	Date (Mo., Day, Yr.) Only if Honoraria
1	Wells Fargo Savings (S)				x														x			x											
2	Wells Fargo Checking (S)		x																x			x											
3																																	
4	Vanguard Prime Money Mkt Fund (S)			x														x					x										
5	Janus Olympus Fund (S)		x											x							x												
6	Fidelity 401(k) (S): Invest Gr Bond Fund			x										x									x										
7	Intuit, Inc. Common Stock (S)			x																	x												
8	Vitria Technology, Inc. Common Stock		x																		x												
* 9	INTUIT Common Stock - [illegible]	X																		X				X									

* This category applies only if the asset/income is solely that of the filer's spouse or dependent children. If the asset/income is either that of the filer or jointly held by the filer with the spouse or dependent children, mark the other higher categories of value, as appropriate.

Prior Editions Cannot Be Used. * Reclassified and incorporated [illegible]

SF 278 (Rev. 03/2000)
5 C.F.R. Part 2634
U.S. Office of Government Ethics

Do not complete Schedule B if you are a new entrant, nominee, or Vice Presidential or Presidential Candidate

Reporting Individual's Name: Powell, Benjamin A

SCHEDULE B

Part I: Transactions

Report any purchase, sale, or exchange by you, your spouse, or dependent children during the reporting period of any real property, stocks, bonds, commodity futures, and other securities when the amount of the transaction exceeded $1,000. Include transactions that resulted in a loss.

Do not report a transaction involving property used solely as your personal residence, or a transaction solely between you, your spouse, or dependent child. Check the "Certificate of divestiture" block to indicate sales made pursuant to a certificate of divestiture from OGE.

None ☐

	Identification of Assets	Transaction Type (x): Purchase	Sale	Exchange	Date (Mo., Day, Yr.)	Amount of Transaction (x): $1,001 - $15,000	$15,001 - $50,000	$50,001 - $100,000	$100,001 - $250,000	$250,001 - $500,000	$500,001 - $1,000,000	Over $1,000,000*	$1,000,001 - $5,000,000	$5,000,001 - $25,000,000	$25,000,001 - $50,000,000	Over $50,000,000	Certificate of divestiture
Example	Central Airlines Common	x			2/1/99			x									
1	Intuit Common Stock Options Exercised	x			5/27/03		x										
2	Intuit Common Stock - Stock Sold (from options exercised)		x		5/27/03		x										
3	Vanguard Growth Index Fund Inv (S)		x		8/26/02	x											
4																	
5																	

*This category applies only if the underlying asset is solely that of the filer's spouse or dependent children. If the underlying asset is either held by the filer or jointly held by the filer with the spouse or dependent children, use the other higher categories of value, as appropriate.

Part II: Gifts, Reimbursements, and Travel Expenses

For you, your spouse and dependent children, report the source, a brief description, and the value of: (1) gifts (such as tangible items, transportation, lodging, food, or entertainment) received from one source totaling more than $260, and (2) travel-related cash reimbursements received from one source totaling more than $260. For conflicts analysis, it is helpful to indicate a basis for receipt, such as personal friend, agency approval under 5 U.S.C. § 4111 or other statutory authority, etc. For travel-related gifts and reimbursements, include travel itinerary, dates, and the nature of expenses provided. **Exclude** anything given to you by the U.S. Government; given to your agency in connection with official travel; received from relatives; received by your spouse or dependent child totally independent of their relationship to you; or provided as personal hospitality at the donor's residence. Also, for purposes of aggregating gifts to determine the total value from one source, exclude items worth $104 or less. See instructions for other exclusions.

None ☒

	Source (Name and Address)	Brief Description	Value
Examples	Nat'l Assn. of Rock Collectors, NY, NY	Airline ticket, hotel room & meals incident to national conference 6/15/99 (personal activity unrelated to duty)	$500
	Frank Jones, San Francisco, CA	Leather briefcase (personal friend)	$300
1			
2			
3			
4			
5			

Prior Editions Cannot Be Used. * Filer individual divestment - 7-17-03 - [illegible]

SF 278 (Rev. 03/2000)
5 C.F.R. Part 2634
U.S. Office of Government Ethics

Do not complete Schedule B if you are a new entrant, nominee, or Vice Presidential or Presidential Candidate

Reporting Individual's Name: Powell, Benjamin A

SCHEDULE B continued
(Use only if needed)

Part I: Transactions

	Identification of Assets	Transaction Type (x): Purchase	Sale	Exchange	Date (Mo., Day, Yr.)	Amount of Transaction (x): $1,001 - $15,000	$15,001 - $50,000	$50,001 - $100,000	$100,001 - $250,000	$250,001 - $500,000	$500,001 - $1,000,000	Over $1,000,000*	$1,000,001 - $5,000,000	$5,000,001 - $25,000,000	$25,000,001 - $50,000,000	Over $50,000,000	Certificate of divestiture
1																	
2																	
3																	
4																	
5																	
6																	
7																	
8																	
9																	
10																	
11																	
12																	
13																	
14																	
15																	
16																	

*This category applies only if the underlying asset is solely that of the filer's spouse or dependent children. If the underlying asset is either held by the filer or jointly held by the filer with the spouse or dependent children, use the other higher categories of value, as appropriate.

Prior Editions Cannot Be Used.

SF 278 (Rev. 03/2000)
5 C.F.R. Part 2634
U.S. Office of Government Ethics

Reporting Individual's Name: Powell, Benjamin A

SCHEDULE C

Part I: Liabilities

Report liabilities over $10,000 owed to any one creditor at **any time** during the reporting period by you, your spouse, or dependent children. Check the highest amount owed during the reporting period. **Exclude** a mortgage on your personal residence unless it is rented out; loans secured by automobiles, household furniture or appliances; and liabilities owed to certain relatives listed in instructions. See instructions for revolving charge accounts.

None [x]

	Creditors (Name and Address)	Type of Liability	Date Incurred	Interest Rate	Term if applicable	Category of Amount or Value (x): $10,001 - $15,000	$15,001 - $50,000	$50,001 - $100,000	$100,001 - $250,000	$250,001 - $500,000	$500,001 - $1,000,000	Over $1,000,000*	$1,000,001 - $5,000,000	$5,000,001 - $25,000,000	$25,000,001 - $50,000,000	Over $50,000,000
Examples	First District Bank, Washington, DC	Mortgage on rental property, Delaware	1991	8%	25 yrs.			x								
	John Jones, 123 JSt., Washington, DC	Promissory note	1999	10%	on demand					x						
1																
2																
3																
4																
5																

*This category applies only if the liability is solely that of the filer's spouse or dependent children. If the liability is that of the filer or a joint liability of the filer with the spouse or dependent children, mark the other higher categories, as appropriate.

Part II: Agreements or Arrangements

Report your agreements or arrangements for: (1) continuing participation in an employee benefit plan (e.g. pension, 401k, deferred compensation); (2) continuation of payment by a former employer (including severance payments); (3) leaves of absence; and (4) future employment. See instructions regarding the reporting of negotiations for any of these arrangements or benefits.

None [x]

	Status and Terms of any Agreement or Arrangement	Parties	Date
Example	Pursuant to partnership agreement, will receive lump sum payment of capital account & partnership share, calculated on service performed through 1/00.	Doe Jones & Smith, Hometown, State	7/85
1			
2			
3			
4			
5			
6			

Prior Editions Cannot Be Used.

SF 278 (Rev. 03/2000)
5 C.F.R. Part 2634
U.S. Office of Government Ethics

Reporting Individual's Name	SCHEDULE D	Page Number
Powell, Benjamin A		7 of 10

Part I: Positions Held Outside U.S. Government

Report any positions held during the applicable reporting period, whether compensated or not. Positions include but are not limited to those of an officer, director, trustee, general partner, proprietor, representative, employee, or consultant of any corporation, firm, partnership, or other business enterprise or any non-profit organization or educational institution. **Exclude** positions with religious, social, fraternal, or political entities and those solely of an honorary nature.

None ☐

	Organization *(Name and Address)*	Type of Organization	Position Held	From *(Mo., Yr.)*	To *(Mo., Yr.)*
Examples	Nat'l Assn. of Rock Collectors, NY, NY	Non-profit education	President	6/92	Present
	Doe Jones & Smith, Hometown, State	Law firm	Partner	7/85	1/00
1	Vitria Technology, Inc.	Corporation	Corporate Counsel	11/00	7/02
2					
3					
4					
5					
6					

Part II: Compensation in Excess of $5,000 Paid by One Source

Report sources of more than $5,000 compensation received by you or your business affiliation for services provided directly by you during any one year of the reporting period. This includes the names of clients and customers of any corporation, firm, partnership, or other business enterprise, or any other non-profit organization when you directly provided the services generating a fee or payment of more than $5,000. You need not report the U.S. Government as a source.

Do not complete this part if you are an Incumbent, Termination Filer, or Vice Presidential or Presidential Candidate.

None ☐

	Source *(Name and Address)*	Brief Description of Duties
Examples	Doe Jones & Smith, Hometown, State	Legal services
	Metro University (client of Doe Jones & Smith), Monestown, State	Legal services in connection with university construction
1		
2		
3		
4		
5		
6		

Prior Editions Cannot Be Used.

SF 278 (Rev. 03/2000)
5 C.F.R. Part 2634
U.S. Office of Government Ethics

Reporting Individual's Name: Powell, Benjamin A

SCHEDULE A continued
(Use only if needed)

Assets and Income — BLOCK A

Valuation of Assets at close of reporting period — BLOCK B

Income: type and amount. If "None (or less than $201)" is checked, no other entry is needed in Block C for that item. — BLOCK C

#	Assets and Income (BLOCK A)	None (or less than $1,001)	$1,001 - $15,000	$15,001 - $50,000	$50,001 - $100,000	$100,001 - $250,000	$250,001 - $500,000	$500,001 - $1,000,000	Over $1,000,000*	$1,000,001 - $5,000,000	$5,000,001 - $25,000,000	$25,000,001 - $50,000,000	Over $50,000,000	Excepted Investment Fund	Excepted Trust	Qualified Trust	Type: Dividends	Type: Rent and Royalties	Type: Interest	Type: Capital Gains	Amount: None (or less than $201)	$201 - $1,000	$1,001 - $2,500	$2,501 - $5,000	$5,001 - $15,000	$15,001 - $50,000	$50,001 - $100,000	$100,001 - $1,000,000	Over $1,000,000*	$1,000,001 - $5,000,000	Over $5,000,000	Other Income (Specify Type & Actual Amount)	Date (Mo., Day, Yr.) Only if Honoraria
1	Janus IRA Enterprise Fund (s)	x												x							x												
2	Janus IRA Mercury (s)	x												x							x												
3	Schwab One Money Market Fund		x											X								x											
4	Disney Walt Co. Comm Stock		x																		x												
5	Hewlett-Packard Co Comm Stock		x																		x												
6	Kroger Co Comm Stock		x																		x												
7	Procter & Gamble Co Comm Stock		x														x					x											
8	Sun Microsysems Inc Comm Stock		x																		x												
9	Transmeta Co. Comm Stock		x																		x												

* This category applies only if the asset/income is solely that of the filer's spouse or dependent children. If the asset/income is either that of the filer or jointly held by the filer with the spouse or dependent children, mark the other higher categories of value, as appropriate.

Prior Editions Cannot Be Used. X Filer initiated and directed trades - 1 of 2.

SF 278 (Rev. 03/2000)
5 C.F.R. Part 2634
U.S. Office of Government Ethics

Reporting Individual's Name: Powell, Benjamin A

SCHEDULE A continued
(Use only if needed)

Assets and Income — BLOCK A

Valuation of Assets at close of reporting period — BLOCK B

Income: type and amount. If "None (or less than $201)" is checked, no other entry is needed in Block C for that item. — BLOCK C

#	Assets and Income (BLOCK A)	None (or less than $1,001)	$1,001 - $15,000	$15,001 - $50,000	$50,001 - $100,000	$100,001 - $250,000	$250,001 - $500,000	$500,001 - $1,000,000	Over $1,000,000*	$1,000,001 - $5,000,000	$5,000,001 - $25,000,000	$25,000,001 - $50,000,000	Over $50,000,000	Excepted Investment Fund	Excepted Trust	Qualified Trust	Type: Dividends	Type: Rent and Royalties	Type: Interest	Type: Capital Gains	Amount: None (or less than $201)	$201 - $1,000	$1,001 - $2,500	$2,501 - $5,000	$5,001 - $15,000	$15,001 - $50,000	$50,001 - $100,000	$100,001 - $1,000,000	Over $1,000,000*	$1,000,001 - $5,000,000	Over $5,000,000	Other Income (Specify Type & Actual Amount)	Date (Mo., Day, Yr.) Only if Honoraria
1	ABA Members Retirement Program 401(k): 4 funds: listed below																																
2	A. Large Cap Growth Equity Fund		x											x							x												
3	B. Index Equity Fund		x											x							x												
4	C. Small Cap Equity Fund		x											x							x												
5	D. International Equity Fund		x											x							x												
6																																	
7																																	
8																																	
9																																	

* This category applies only if the asset/income is solely that of the filer's spouse or dependent children. If the asset/income is either that of the filer or jointly held by the filer with the spouse or dependent children, mark the other higher categories of value, as appropriate.

Prior Editions Cannot Be Used.

SF 278 (Rev. 03/2000)
5 C.F.R. Part 2634
U.S. Office of Government Ethics

Reporting Individual's Name: Powell, Benjamin A

SCHEDULE A continued
(Use only if needed)

Assets and Income — BLOCK A

Valuation of Assets at close of reporting period — BLOCK B

Income: type and amount. If "None (or less than $201)" is checked, no other entry is needed in Block C for that item. — BLOCK C

#	Assets and Income (Block A)	None (or less than $1,001)	$1,001 - $15,000	$15,001 - $50,000	$50,001 - $100,000	$100,001 - $250,000	$250,001 - $500,000	$500,001 - $1,000,000	Over $1,000,000*	$1,000,001 - $5,000,000	$5,000,001 - $25,000,000	$25,000,001 - $50,000,000	Over $50,000,000	Excepted Investment Fund	Excepted Trust	Qualified Trust	Type: Dividends	Type: Rent and Royalties	Type: Interest	Type: Capital Gains	Amount: None (or less than $201)	$201 - $1,000	$1,001 - $2,500	$2,501 - $5,000	$5,001 - $15,000	$15,001 - $50,000	$50,001 - $100,000	$100,001 - $1,000,000	Over $1,000,000*	$1,000,001 - $5,000,000	Over $5,000,000	Other Income (Specify Type & Actual Amount)	Date (Mo., Day, Yr.) Only if Honoraria
1	Cleary Gottlieb 401(k): 4 funds:																																
2	A. Fidelity Blue Chip		x											x							x												
3	B. Fidelity OTC Port		x											x							x												
4	C. Sit Mid Cap Growth		x											x							x												
5	D. Fidelity Sh Term Bond		x											x							x												
6																																	
7																																	
8																																	
9																																	

* This category applies only if the asset/income is solely that of the filer's spouse or dependent children. If the asset/income is either that of the filer or jointly held by the filer with the spouse or dependent children, mark the other higher categories of value, as appropriate.

Prior Editions Cannot Be Used.

ANSWERS TO ADDITIONAL PRE-HEARING QUESTIONS FOR BENJAMIN A. POWELL

1. The legislation creating the position of General Counsel within the Office of the Director of National Intelligence provides that the General Counsel will perform the functions prescribed by the Director of National Intelligence.

   a. What functions has the DNI prescribed, or is the DNI considering prescribing, for the General Counsel?

   Answer: The National Security Act of 1947, as amended by the Intelligence Reform and Terrorism Prevention Act of 2004 (IRTPA), provides that the General Counsel is the "chief legal officer" of the Office of the Director of National Intelligence (ODNI) and shall perform such functions as the DNI may prescribe. In his answers to questions from the Committee submitted during his confirmation process, the DNI wrote that the General Counsel will play "a critical role in ensuring all employees or contractors assigned to the Office of the Director of National Intelligence comply with U.S. law and any applicable regulations and directives. I would expect the GC will be a key member of my senior advisory team, provide legal and ethical counsel to ODNI managers and staff members alike, and participate in all significant decisions taken in the Office." Consistent with that perspective, I understand that the attorneys in the Office of General Counsel currently provide a broad range of day-to-day support -- including reviewing or drafting directives and interagency agreements, as well as providing guidance on administrative legal matters – in order to assist the ODNI in implementing the legislation and ensuring compliance with applicable law.

   b. Explain whether the DNI General Counsel will assume the responsibilities the CIA General Counsel filled with respect to the DCI's role as head of the Intelligence Community and principal adviser to the President.

   Answer: I expect that the DNI General Counsel will assume the responsibilities the CIA General Counsel filled with respect to the previous role of the DCI as head of the Intelligence Community (IC) and principal adviser to the President for intelligence matters relating to the national security. Under Section 102(b)(1)-(2) of the National Security Act of 1947, as amended, the DNI now has the responsibility to serve as head of the Intelligence Community and the principal adviser to the President for intelligence matters related to the national security. As the chief legal officer of the ODNI, I expect, if confirmed, that the General Counsel will provide legal support to the DNI to enable him to carry out these responsibilities.

   c. Explain the relationship of the DNI General Counsel to the General Counsel of each element of the Intelligence Community and the General Counsel of each Department and Agency containing elements of the Intelligence Community.

   Answer: As the chief legal officer for the ODNI, the DNI General Counsel will assist and advise the DNI in implementation of the authorities and responsibilities of the

DNI under IRTPA, Executive Orders, and other applicable law. This will require extensive interaction and collaboration with the General Counsels of other elements of the IC and of the Departments and Agencies containing elements of the IC.

Under Section 102A(f)(4) of the National Security Act of 1947, as amended, the DNI "shall ensure compliance with the Constitution and laws of the United States by the Central Intelligence Agency and shall ensure such compliance by other elements of the intelligence community through the host executive departments that manage the programs and activities that are part of the National Intelligence Program." The specific responsibility assigned to the DNI for the CIA will require extensive coordination and communication between the DNI General Counsel and the CIA General Counsel to ensure compliance with applicable laws. The DNI is also assigned responsibility to ensure such compliance by other elements of the IC through the host executive departments. This will also require extensive coordination and cooperation with the legal officers for each element of the IC and the chief legal officers of each department and agency containing elements of the IC.

The IRTPA also contains provisions providing for the issuance of DNI policies, procedures, and guidance. These provisions relate to ODNI-specific as well as IC-wide matters including the collection and analysis of intelligence, coordination of foreign relationships, information sharing, security requirements, personnel policies (including the service of IC personnel on the staff of the DNI), the appropriations process, and other important issues that will require legal review and analysis.

Implementation of these provisions and other applicable laws will have legal implications for both the ODNI and other US Government elements. Provision of legal support to the DNI will require extensive and appropriate interaction, consultation, and collaboration with legal officials of other agencies to support the DNI effectively, consistent with the authorities and responsibilities both of the DNI and of other department and agency heads.

d. Describe the role of the DNI, and the DNI General Counsel, in providing recommendations for, concurrence, or comments on the appointment of the General Counsel or other head legal official in each element of the Intelligence Community.

Answer: The IRTPA does not define a role for the DNI General Counsel in personnel selection for legal officials in each element of the IC. If confirmed, I will work with the DNI, the heads of relevant departments and agencies containing elements of the IC, and heads of elements of the IC to determine an appropriate role.

e. Explain what role, if any, the DNI General Counsel will fill in providing legal counsel and assistance to the Director of the National Counter Terrorism Center.

Answer: Under Section 119(a) of the National Security Act of 1947, as amended, the National Counterterrorism Center is within the ODNI. As the chief legal officer of

the ODNI, the DNI General Counsel will provide the necessary legal services to the Director of the National Counterterrorism Center.

If confirmed, I look forward to working with the Director of the National Counterterrorism Center and ensuring that the Director receives all necessary legal services to carry out the critical mission of the Center to enhance the national security.

2. Describe your understanding of the responsibilities of the DNI General Counsel in reviewing, and providing legal advice on, covert actions.

Answer: Under Section 102A(f)(4) of the National Security Act of 1947, as amended, the DNI "shall ensure compliance with the Constitution and laws of the United States by the Central Intelligence Agency and shall ensure such compliance by other elements of the intelligence community through the host executive departments that manage the programs and activities that are part of the National Intelligence Program." The DNI has stated that the DNI General Counsel will be a key member of his advisory team. If confirmed, I expect that I will have a significant role in reviewing any such activity, as appropriate, to ensure the DNI effectively carries out his responsibility under Section 102A, and other applicable law, and that all appropriate notification procedures under Section 503 are followed.

3. Describe your understanding of the responsibilities of the DNI General Counsel in reviewing, and providing legal advice on, detention, interrogation, rendition, and trial of persons in the custody of any element of the Intelligence Community.

Answer: Under Section 102A(f)(4) of the National Security Act of 1947, as amended, the DNI "shall ensure compliance with the Constitution and laws of the United States by the Central Intelligence Agency and shall ensure such compliance by other elements of the intelligence community through the host executive departments that manage the programs and activities that are part of the National Intelligence Program." As chief legal officer of the ODNI, the DNI General Counsel will provide legal support to the DNI. If confirmed, I will advise the DNI if the DNI is presented with such issues.

4. Through the course of its regular oversight activities, the Committee has identified instances in which incorrect and overly cautious legal interpretations have impeded the ability of the Intelligence Community elements to fulfill their missions.

    a. Explain your understanding of the role of the DNI General Counsel in resolving conflicting legal interpretation within the Intelligence Community.

    Answer: If confirmed, I would work with the relevant elements of the IC and departments and agencies containing elements of the IC to identify significant areas of conflicting legal interpretation. The role of the DNI General Counsel is to ensure these areas are discussed and see if a resolution of the conflict can be arrived at after additional discussion. To the extent there are disagreements that involve matters within the authority or responsibility of the DNI, the DNI General Counsel can

provide appropriate legal advice. To the extent disagreement persists and a definitive ruling on the law is necessary for the Executive Branch, I would, if confirmed, obtain the advice of the Office of Legal Counsel at the Department of Justice.

b. In its report, the Commission on the Intelligence Capabilities of the United States Regarding Weapons of Mass Destruction (the WMD Commission) noted that "many Community problems were addressed through ad hoc, interagency task forces that tended to gravitate toward lowest common denominator solutions that were based on consensus and allowed action to be stalled by the doubts of the most cautious legal shop." What mechanism will you put in place to prevent such an approach in the future?

Answer: All activities must comply with the Constitution and applicable laws, and protect the constitutional and statutory rights of all Americans. If confirmed, I would instruct legal officers of the ODNI to bring to my attention any areas where such behavior as described in the WMD Commission report was occurring. The DNI General Counsel office would seek to resolve the agreement based on the correct interpretation of the law, and as necessary, consult with the Office of Legal Counsel at the Department of Justice.

5. The Committee recently reported a bill (S. 1266) that permanently authorizes nine expiring intelligence-related provisions of the USA PATRIOT Act; reauthorizes for four additional years the FISA "Lone Wolf" provisions; and provides additional tools to national security investigators to help stop terrorism and espionage.

a. What are your views on the importance of permanently authorizing the expiring USA PATRIOT Act provisions?

Answer: I support the renewal of the expiring USA PATRIOT Act provisions. As the President stated on February 14, 2005, "Many key elements of the PATRIOT Act are now set to expire at the end of this year. We must not allow the passage of time or the illusion of safety to weaken our resolve in this new war. To protect the American people, Congress must promptly renew all provisions of the PATRIOT Act this year."

I understand from the testimony of Department of Justice officials and officials within the IC that the PATRIOT Act has played an integral part of prosecuting the war on terrorism, including the dismantling of terrorist cells, disruption of terrorist plots, and the stopping of terrorists before they could harm Americans. I also understand the government has used the capabilities provided by the PATRIOT Act in a manner that enhances national security while protecting the civil liberties of all Americans.

The report of the WMD Commission, in particular Chapter 13, makes clear the gravity of some of the threats facing the country at this time. I understand that the USA PATRIOT Act provides critical tools for combating the threats, especially in the

areas allowing for the robust exchange of information between intelligence and law enforcement organizations.

b. What are your views on the importance of permanently authorizing or renewing the "Lone Wolf" provision?

Answer: I understand that the "Lone Wolf" provision amends the definition of "Agent of a foreign power" contained in Section 101(b)(1) of the Foreign Intelligence Surveillance Act of 1978, as amended, to include any person other than a United States person who "engages in international terrorism or activities in preparation therefore." I have not discussed in detail this provision with relevant officials, but I understand that the Attorney General and the FBI Director have both testified in front of the Committee that this provision is critical to continued success in the war against terrorism and must not be allowed to sunset.

I support ensuring that the relevant law enforcement officials are provided with the tools that are necessary to enhance the national security, subject to appropriate safeguards.

c. The Committee's bill would provide the Attorney General with the authority to use administrative subpoenas in lawful national security investigations. Do you support extending the use of this investigative tool to the national security arena? Explain the rationale supporting your answer.

Answer: I have not reviewed in detail the need for the use of administrative subpoenas in lawful national security investigations. The President has called on the Congress to provide this tool that is used in other criminal investigations, such as drug cases and organized crime cases, to national security investigations. The President has stated that:

> Under current federal law, there are unreasonable obstacles to investigating and prosecuting terrorism, obstacles that don't exist when law enforcement officials are going after embezzlers or drug traffickers. For the sake of the American people, Congress should change the law, and give law enforcement officials the same tools they have to fight terror that they have to fight other crime. Here's some examples. Administrative subpoenas, which enable law enforcement officials to obtain certain records quickly, are critical to many investigations. They're used in a wide range of criminal and civil matters, including health care fraud and child abuse cases. Yet, incredibly enough, in terrorism cases, where speed is often of the essence, officials lack the authority to use administrative subpoenas. If we can use these subpoenas to catch crooked doctors, the Congress should allow law enforcement officials to use them in catching terrorists.

I understand that the Department of Justice views the ability to use administrative subpoenas with appropriate safeguards as enhancing their ability to pursue terrorism investigations.

I support providing those on the front lines of the war on terrorism with the necessary authorities to prevent terrorism, subject to appropriate safeguards.

6. The Committee is focused on transitioning the Intelligence Community to an "information enterprise" – where cleared analysts at all elements of the Intelligence Community, with a valid need-to-know, can access information necessary for them to do their work. In that regard, the Committee has addressed some barriers to information access through its annual Intelligence Authorization legislation. Explain whether additional modifications to Executive Order 12333 or other applicable authorities or statutes will be required before the Intelligence Community can operate like a true "information enterprise."

Answer: As the Program Manager carries out the important information sharing tasks assigned to the Program Manager, barriers to information sharing may be identified. If confirmed, I look forward to working with the Program Manager and other officials to ensure such barriers are modified as necessary to enhance the national security while protecting the constitutional and statutory information privacy rights of all Americans.

The President has endorsed the WMD Commission recommendation concerning the need to review the IC rules governing collection and retention of information on U.S. persons to ensure they are consistent (as appropriate), account for new technologies, and accurately reflect constitutional and statutory information privacy protections. If confirmed, I would plan to work closely with the relevant entities to ensure such a review is carried out, consistent with applicable law.

7. In certain instances, current restrictions governing the sharing of information covered by the Privacy Act prohibit elements of the Intelligence Community from sharing certain information in government files. As a result, current restrictions prevent the Intelligence Community from maximizing use of collected information. The Privacy Act contains a broad exception that allows the sharing of information for law enforcement purposes, however. Recently, the Information Sharing Working Group recommended that the Privacy Act be amended to permit disclosure of records covered by the Act when the record involves foreign intelligence, counterintelligence, terrorism, weapons of mass destruction, or homeland security information to any federal law enforcement, homeland security, intelligence, protective, immigration, national defense, diplomatic, or national security official in order to assist the official receiving the record or information in the performance of his official duties. Explain whether you would recommend the DNI support such an amendment.

   Answer: The President, Congress, and the DNI, among many others, have expressed the critical importance of robust information sharing to protect America from attack. I have not reviewed the recommendation of the Information Sharing Working Group related to the Privacy Act. If confirmed, I would review any such recommendation and seek input from relevant entities, including the Director of the National Counterterrorism Center, the

Program Manager, the Civil Liberties and Privacy Officer of the ODNI, and other appropriate officials of the IC, as to how any such amendment would affect their mission.

In making a recommendation to the DNI, if confirmed, I would want to ensure that such amendment continues to ensure appropriate safeguards for the constitutional and statutory information privacy rights of all Americans.

8. What are your priorities in staffing the Office of General Counsel in order to have the expertise needed to carry out the functions of the office prescribed by the DNI? How many attorneys do your anticipate will serve in the office and what will be their qualifications?

Answer: If confirmed, my priority in staffing the Office of General Counsel would be to ensure that the office is staffed with talented individuals with a range of experiences and backgrounds to ensure the DNI receives the best legal advice possible. The Office will require a sufficient number of attorneys to ensure that the necessary support is provided to the ODNI in numerous areas relating to the practice of intelligence law, including constitutional law, appropriations law, contracts and acquisition law, human resources, ethics, support for NCTC, counterproliferation, counterintelligence, and other areas falling within the responsibility of the DNI.

If confirmed, I would discuss with the DNI and other DNI officials to determine the appropriate resource level for the Office of General Counsel and the appropriate number of attorneys, paralegals, and other support staff, as well as technology requirements to facilitate IC-wide collaboration. The office must both attract and retain highly talented individuals interested in public service.

SSCI# 2005 2931

2. Describe your understanding of the responsibilities of the DNI General Counsel in reviewing, and providing legal advice on, covert actions.

Section 503(b) of the National Security Act of 1947, as amended, states the DNI is required to keep the congressional intelligence committees fully and currently informed of all covert actions, including significant failures. This accountability to the President and Congress for covert action places a significant responsibility on the DNI to ensure that covert actions are consistent with U.S. foreign policy and conducted in accordance with the U.S. Constitution and all other relevant laws. As the DNI's chief legal advisor, it would be my job to work with all relevant parties to review the current process to enable the DNI to carry out his responsibilities for ensuring the legality of activities as well as for keeping Congress informed in accordance with law. Moreover, without adding any unnecessary layers to the process, if confirmed, I would work closely with the CIA General Counsel, as well as other relevant legal officers throughout the Community, to ensure that there is thorough and effective legal oversight throughout all stages of the covert action planning and implementation process.

More specifically, if confirmed, I intend to support the DNI in carrying out these important responsibilities by engaging in discussions across the community about the legal and policy issues emanating from covert action and related activities. These discussions will enable me to advise the DNI early on of the potential legal issues and risks involved of potential or existing intelligence activity and will ensure that no covert action will violate the law. If confirmed, I expect that I will also be engaged in reviewing new proposals for covert action prior to final approval.

I also understand that there are ongoing issues, particularly with respect to military activities, concerning the appropriate roles of Departments and Agencies in carrying out activities to protect our national security and the appropriate legal regime that applies to such activities. If confirmed, I expect to play a significant role in resolving these questions as necessary in order to enable the DNI to carry out his responsibilities.

3. Describe your understanding of the responsibilities of the DNI General Counsel in reviewing, and providing legal advice on, detention, interrogation, rendition, and trial of persons in the custody of any element of the Intelligence Community.

The General Counsel can assist the DNI by having attorneys become integral to ODNI activities, to understand the actions and the impact of policies of ODNI and the Intelligence Community, and to offer guidance on the compliance and oversight mechanisms to carry out the DNI's responsibilities. A General Counsel should help establish safeguards to prevent improper activities. This calls for appropriate levels of review -- not micromanagement -- but reasonable checkpoints designed to trigger policy and legal review to determine the legality and propriety of activities. This requires a General Counsel to be proactive, not just reactive, to ensure an awareness of both ongoing and planned operations.

SSCI # 2005 2931

This guidance is especially true for covert actions and related activities that can, if not properly conducted, cause highly damaging legal, and domestic and foreign policy problems. Ill-considered practices in the area of detention or interrogation can harm our national security as well as violate the law. Although I am not thoroughly familiar with the details of current US operations, the DNI's General Counsel needs to play a leadership role within the IC to help identify problems and pitfalls and to prevent improper activity. As the WMD Commission Report made clear, the obtaining of critical human intelligence through appropriate methods has been a critical part of preventing further attacks and protecting Americans. At the same time, such activities must comply with law and be consistent with American values.

At his hearing, Ambassador Negroponte committed on the subject of rendition to ensure that the law will be obeyed, to do everything in his power to ensure the organizations under his purview are obeying the law, and seeking to have violators of law held accountable. If confirmed, I expect to play a key role in ensuring that these commitments are met.

United States
Office of Government Ethics
1201 New York Avenue, NW., Suite 500
Washington, DC 20005-3917

SSCI# 2005 2561
w/2005-2484

June 16, 2005

The Honorable Pat Roberts
Chairman
Select Committee on Intelligence
United States Senate
Washington, DC 20510-6475

Dear Mr. Chairman:

In accordance with the Ethics in Government Act of 1978, I enclose a copy of the financial disclosure report filed by Benjamin A. Powell, who has been nominated by President Bush for the position of General Counsel, Office of the Director of National Intelligence.

We have reviewed the report and have also obtained advice from the Office of the Director of National Intelligence concerning any possible conflict in light of its functions and the nominee's proposed duties. Also enclosed is a letter dated June 13, 2005, from Mr. Powell to the agency ethics official, outlining the steps which he will take to avoid conflicts of interest. Unless a specific date has been agreed to, the nominee must fully comply within three months of his confirmation date with the actions he agreed to take in his ethics agreement.

Based thereon, we believe that Mr. Powell is in compliance with applicable laws and regulations governing conflicts of interest.

Sincerely,

Marilyn L. Glynn
Acting Director

Enclosures

SF278 (Rev. 03/2000)
5 C.F.R Part 2634
U.S. Office of Government Ethics

Executive Branch Personnel PUBLIC FINANCIAL DISCLOSURE REPORT

SSCL# 2005 2561

Form Approved
OMB No. 3209-0001

Date of Appointment, Candidacy, Election or Nomination (*Month, Day, Year*)	Reporting Status (*Check appropriate boxes*)	Incumbent [ ]	Calendar Year Covered by Report	New Entrant, Nominee, or Candidate [X]	Termination Filer [ ] / Termination Date (*If Applicable*) (*Month, Day, Year*)
Reporting Individual's Name	Last Name: Powell			First Name and Middle Initial: Benjamin A.	
Position for Which Filing	Title of Position: General Counsel			Department or Agency (*If Applicable*): Director of National Intelligence	
Location of Present Office (or forwarding address)	Address (*Number, Street, City, State, and ZIP Code*): Eisenhower Exec Off Building, Washington, DC 20502			Telephone No. (*Include Area Code*): 202-456-7909	
Position(s) Held with the Federal Government During the Preceding 12 Months (If Not Same as Above)	Title of Position(s) and Date(s) Held: Associate Counsel to the President 2002-2005				
Presidential Nominees Subject to Senate Confirmation	Name of Congressional Committee Considering Nomination: Committee on Intelligence			Do You Intend to Create a Qualified Diversified Trust? [ ] Yes [X] No	
Certification I CERTIFY that the statements I have made on this form and all attached schedules are true, complete and correct to the best of my knowledge.	Signature of Reporting Individual: Benjamin A. Powell			Date (*Month, Day, Year*): May 23, 2005	
Other Review (If desired by agency)	Signature of Other Reviewer:			Date (*Month, Day, Year*):	
Agency Ethics Official's Opinion On the basis of information contained in this report, I conclude that the filer is in compliance with applicable laws and regulations (subject to any comments in the box below).	Signature of Designated Agency Ethics Official/Reviewing Official: Adrian Steele			Date (*Month, Day, Year*): June 13, 2005	
Office of Government Ethics Use Only	Signature: Marilyn L. Glynn			Date (*Month, Day, Year*): 6/15/05	

Comments of Reviewing Officials (*If additional space is required, use the reverse side of this sheet*)

(*Check box if filing extension granted & indicate number of days* _____) [ ]

(*Check box if comments are continued on the reverse side*) [ ]

Fee for Late Filing

Any individual who is required to file this report and does so more than 30 days after the date the report is required to be filed, or, if an extension is granted, more than 30 days after the last day of the filing extension period shall be subject to a $200 fee.

Reporting Periods

Incumbents: The reporting period is the preceding calendar year except Part II of Schedule C and Part I of Schedule D where you must also include the filing year up to the date you file. Part II of Schedule D is not applicable.

Termination Filers: The reporting period begins at the end of the period covered by your previous filing and ends at the date of termination. Part II of Schedule D is not applicable.

Nominees, New Entrants and Candidates for President and Vice President:

Schedule A--The reporting period for income (BLOCK C) is the preceding calendar year and the current calendar year up to the date of filing. Value assets as of any date you choose that is within 31 days of the date of filing.

Schedule B--Not applicable.

Schedule C, Part I (Liabilities)--The reporting period is the preceding calendar year and the current calendar year up to any date you choose that is within 31 days of the date of filing.

Schedule C, Part II (Agreements or Arrangements)-- Show any agreements or arrangements as of the date of filing.

Schedule D--The reporting period is the preceding two calendar years and the current calendar year up to the date of filing.

Agency Use Only

OGE Use Only
JUN 14 2005

SF278 (Rev. 03/2000)
5 C.F.R Part 2634
U.S. Office of Government Ethics

Reporting Individual's Name: Powell, Benjamin A.

SCHEDULE A

Page Number: 2

Assets and Income — BLOCK A

For you, your spouse, and dependent children, report each asset held for investment or the production of income which had a fair market value exceeding $1,000 at the close of the reporting period, or which generated more than $200 in income during the reporting period, together with such income.

For yourself, also report the source and actual amount of earned income exceeding $200 (other than from the U.S. Government). For your spouse, report the source but not the amount of earned income of more than $1,000 (except report the actual acount of any honoraria over $200 of your spouse).

None ☐

Valuation of Assets at close of reporting period — BLOCK B

Income: type and amount. If "None (or less than $201)" is checked, no other entry is needed in Block C for that item. — BLOCK C

	Assets and Income	None (or less than $1,001)	$1,001 - $15,000	$15,001 - $50,000	$50,001 - $100,000	$100,001 - $250,000	$250,001 - $500,000	$500,001 - $1,000,000	Over $1,000,000 *	$1,000,001 - $5,000,000	$5,000,001 - $25,000,000	$25,000,001 - $50,000,000	Over $50,000,000	Excepted Investment Fund	Excepted Trust	Qualified Trust	Type: Dividends	Type: Rent and Royalties	Type: Interest	Type: Capital Gains	Amount: None (or less than $201)	Amount: $201 - $1,000	Amount: $1,001 - $2,500	Amount: $2,501 - $5,000	Amount: $5,001 - $15,000	Amount: $15,001 - $50,000	Amount: $50,001 - $100,000	Amount: $100,001 - $1,000,000	Amount: Over $1,000,000*	Amount: $5,000,001 - $25,000,000	Amount: Over $25,000,000	Other Income (Specify Type & Actual Amount)	Date (Mo., Day, Yr.) Only if Honoraria
Examples	Central Airlines Common				X												X						X										
	Doe Jones & Smith, Hometown, State			X																												Law Partnership Income $130,000	
	Kempstone Equity Fund					X								X										X									
	IRA: Heartland 500 Index Fund							X						X											X								
1	USAA Bank Savings Acct.		X																X			X											
2	USAA Bank Checking Acct.		X																X		X												
3	State Dept FCU Share Acct (S)			X															X			X											
4	Vitria Tech. 401 (k): JH Lifestyle Fund			X										X							X												
5	Vanguard Prime Money Mkt Fund (S)			X										X			X					X											
6	Janus Olympus Fund (S)		X											X							X												
7	Intuit Inc. 401(k): Fidelity Invest Grade Bond Fund (S)			X										X									X										

* This category applies only if the asset/income is solely that of the filer's spouse or dependent children. If the asset/income is either that of the filer or jointly held by the filer with the spouse or dependent children, mark the other higher categories of value, as appropriate.

Prior Editions Cannot be Used.

SF278 (Rev. 03/2000)
5 C.F.R Part 2634
U.S. Office of Government Ethics

Reporting Individual's Name: Powell, Benjamin A.

SCHEDULE A continued

(Use only if needed)

Page Number: 3

Assets and Income — BLOCK A

Valuation of Assets at close of reporting period — BLOCK B

Income: type and amount. If "None (or less than $201)" is checked, no other entry is needed in Block C for that item. — BLOCK C

None ☐

#	Assets and Income (BLOCK A)	None (or less than $1,001)	$1,001 - $15,000	$15,001 - $50,000	$50,001 - $100,000	$100,001 - $250,000	$250,001 - $500,000	$500,001 - $1,000,000	Over $1,000,000 *	$1,000,001 - $5,000,000	$5,000,001 - $25,000,000	$25,000,001 - $50,000,000	Over $50,000,000	Excepted Investment Fund	Excepted Trust	Qualified Trust	Type: Dividends	Type: Rent and Royalties	Type: Interest	Type: Capital Gains	Amount: None (or less than $201)	$201 - $1,000	$1,001 - $2,500	$2,501 - $5,000	$5,001 - $15,000	$15,001 - $50,000	$50,001 - $100,000	$100,001 - $1,000,000	Over $1,000,000*	$1,000,001 - $5,000,000	Over $5,000,000	Other Income (Specify Type & Actual Amount)	Date (Mo., Day, Yr.) Only if Honoraria
1	Intuit Inc. Common Stock (S)			X													X				X												
2	Janus IRA Enterprise Fund (s)	X												X																		Income Unascertainable	
3	Janus IRA Mercury (s)	X												X							X												
4	Schwab One Money Market Fund	X												X							X												
5	Hewlett-Packard Co Comm Stock		X														X				X												
6	Kroger Co Comm Stock		X																		X												
7	Sun Microsystems Inc. Comm Stock		X																		X												
8	Transmeta Co. Comm. Stock		X																		X												
9	Walt Disney Co. Common Stock	X															X			X			X										

* This category applies only if the asset/income is solely that of the filer's spouse or dependent children. If the asset/income is either that of the filer or jointly held by the filer with the spouse or dependent children, mark the other higher categories of value, as appropriate.

Prior Editions Cannot be Used.

SF278 (Rev. 03/2000)
5 C.F.R. Part 2634
U.S. Office of Government Ethics

Reporting Individual's Name: Powell, Benjamin A.

SCHEDULE A continued

(Use only if needed)

Page Number: 4

Assets and Income — BLOCK A

Valuation of Assets at close of reporting period — BLOCK B

Income: type and amount. If "None (or less than $201)" is checked, no other entry is needed in Block C for that item. — BLOCK C

None ☐

#	Assets and Income (BLOCK A)	None (or less than $1,001)	$1,001 - $15,000	$15,001 - $50,000	$50,001 - $100,000	$100,001 - $250,000	$250,001 - $500,000	$500,001 - $1,000,000	Over $1,000,000 *	$1,000,001 - $5,000,000	$5,000,001 - $25,000,000	$25,000,001 - $50,000,000	Over $50,000,000	Excepted Investment Fund	Excepted Trust	Qualified Trust	Type: Dividends	Type: Rent and Royalties	Type: Interest	Type: Capital Gains	Amount: None (or less than $201)	$201 - $1,000	$1,001 - $2,500	$2,501 - $5,000	$5,001 - $15,000	$15,001 - $50,000	$50,001 - $100,000	$100,001 - $1,000,000	Over $1,000,000*	$1,000,001 - $5,000,000	Over $5,000,000	Other Income (Specify Type & Actual Amount)	Date (Mo., Day, Yr.) Only if Honoraria
1	ABA Members Retirement Program 401 (k) underlying assets listed below:																																
2	A. Large Cap Growth Equity Fund		X											X																		Income Unascertainable	
3	B. Index Equity Fund		X											X																		Income Unascertainable	
4	C. Small Cap Equity Fund		X											X																		Income Unascertainable	
5	D. International Fund		X											X																		Income Unascertainable	
6																																	
7	Proctor & Gamble Common Stock	X															X			X					X								
8																																	
9																																	

* This category applies only if the asset/income is solely that of the filer's spouse or dependent children. If the asset/income is either that of the filer or jointly held by the filer with the spouse or dependent children, mark the other higher categ

Prior Editions Cannot be Used.

SF278 (Rev. 03/2000)
5 C.F.R Part 2634
U.S. Office of Government Ethics

Reporting Individual's Name: Powell, Benjamin A.

SCHEDULE A continued

(Use only if needed)

Page Number: 5

Assets and Income — BLOCK A

Valuation of Assets at close of reporting period — BLOCK B

Income: type and amount. If "None (or less than $201)" is checked, no other entry is needed in Block C for that item. — BLOCK C

None ☐

#	Assets and Income	None (or less than $1,001)	$1,001 - $15,000	$15,001 - $50,000	$50,001 - $100,000	$100,001 - $250,000	$250,001 - $500,000	$500,001 - $1,000,000	Over $1,000,000 *	$1,000,001 - $5,000,000	$5,000,001 - $25,000,000	$25,000,001 - $50,000,000	Over $50,000,000	Excepted Investment Fund	Excepted Trust	Qualified Trust	Type: Dividends	Type: Rent and Royalties	Type: Interest	Type: Capital Gains	Amount: None (or less than $201)	$201 - $1,000	$1,001 - $2,500	$2,501 - $5,000	$5,001 - $15,000	$15,001 - $50,000	$50,001 - $100,000	$100,001 - $1,000,000	Over $1,000,000*	$1,000,001 - $5,000,000	Over $5,000,000	Other Income (Specify Type & Actual Amount)	Date (Mo., Day, Yr.) Only if Honoraria
1	Clearly Gottlieb 401 (k) (S): underlying assets listed below																																
2	A. Fidelity Blue Chip		X											X							X												
3	B. Fidelity OTC Port		X											X							X												
4	C. Sit Mid Cap Growth		X											X							X												
5	D. Fidelity Short Term Bond		X											X								X											
6																																	
7																																	
8																																	
9																																	

* This category applies only if the asset/income is solely that of the filer's spouse or dependent children. If the asset/income is either that of the filer or jointly held by the filer with the spouse or dependent children, mark the other higher categ

Prior Editions Cannot be Used.

SF 278 (Rev. 03/2000)
5 C.F.R. Part 2634
U.S. Office of Government Ethics

Do not Complete Schedule B if you are a new entrant, nominee, Vice Presidential or Presidential Candidate

Reporting Individual's Name		Page Number
Powell, Benjamin A.	**SCHEDULE B**	6

Part I: Transactions

None ☐

Report any purchase, sale, or exchange by you, your spouse, or dependent children during the reporting period of any real property, stocks, bonds, commodity futures, and other securities when the amount of the transaction exceeded $1,000. Include transactions that resulted in a loss. Do not report a transaction involving property used solely as your personal residence, or a transaction solely between you, your spouse, or dependent child. Check the "Certificate of divestiture" block to indicate sales made pursuant to a certificate of divestiture from OGE.

	Identification of Assets	Transaction Type (x): Purchase	Sale	Exchange	Date (Mo., Day, Yr.)	Amount of Transaction (x): $1,001 - $15,000	$15,001 - $50,000	$50,001 - $100,000	$100,001 - $250,000	$250,001 - $500,000	$500,001 - $1,000,000	Over $1,000,000*	$1,000,001 - $5,000,000	$5,000,001 - $25,000,000	$25,000,001 - $50,000,000	Over $50,000,000	Certificate of divestiture
Example:	Central Airlines Common	x			2/1/99			x									
1	Not Applicable																
2																	
3																	
4																	
5																	
6																	

* This category applies only if the underlying asset is solely that of the filer's spouse or dependent children. If the underlying asset is either held by the filer or jointly held by the filer with the spouse or dependent children, use the other higher categories of value, as appropriate.

Part II: Gifts, Reimbursements, and Travel Expenses

For you, your spouse and dependent children, report the source, a brief description, and the value of: (1) gifts (such as tangible items, transportation, lodging, food, or entertainment) received from one source totaling more than $260; and (2) travel-related cash reimbursements received from one source totaling more than $260. For conflicts analysis, it is helpful to indicate a basis for receipt, such as personal friend, agency approval under 5 U.S.C. § 4111 or other statutory authority, etc. For travel-related gifts and reimbursements, include travel itinerary, dates, and the nature of expenses provided. **Exclude** anything given to you by the U.S. Government; given to your agency in connection with official travel; received from relatives; received by your spouse or dependent child totally independent of their relationship to you; or provided as personal hospitality at the donor's residence. Also, for purposes of aggregating gifts to determine the total value from one source, exclude items worth $104 or less. See instructions for other exclusions.

None ☐

	Source (Name and Address)	Brief Description	Value
Examples:	Nat'l Assn. of Rock Collectors, NY, NY	Airline ticket, hotel room & meals incident to national conference 6/15/99 (personal activity unrelated to duty)	$500
	Frank Jones, San Francisco, CA	Leather briefcase (personal friend)	$300
1	Not Applicable		
2			
3			
4			
5			

Prior Editions Cannot Be Used.

SF 278 (Rev. 03/2000)
5 C.F.R Part 2634
U.S. Office of Government Ethics

Reporting Individual's Name: Powell, Benjamin A.

SCHEDULE C

Page Number: 7

Part I: Liabilities

Report liabilities over $10,000 owed to any one creditor at **any time** during the reporting period by you, your spouse, or dependent children. Check the highest amount owed during the reporting period. **Exclude** a mortgage on your personal residence unless it is rented out; loans secured by automobiles, household furniture or appliances; and liabilities owed to certain relatives listed in instructions. See instructions for revolving charge accounts.

None [x]

	Creditors (Name and Address)	Type of Liability	Date Incurred	Interest Rate	Term if applicable	$10,001 - $15,000	$15,001 - $50,000	$50,001 - $100,000	$100,001 - $250,000	$250,001 - $500,000	$500,001 - $1,000,000	Over $1,000,000*	$1,000,001 - $5,000,000	$5,000,001 - $25,000,000	$25,000,001 - $50,000,000	Over $50,000,000
Examples:	First District Bank, Washington, DC	Mortgage on rental property, Delaware	1991	8%	25 yrs.			x								
	John Jones, 123 J St., Washington, DC	Promissory note	1999	10 %	on demand					x						
1																
2																
3																
4																
5																

Category of Amount or Value (x)

* This category applies only if the liability is solely that of the filer's spouse or dependent children. If the liability is that of the filer or a joint liability of the filer with the spouse or dependent children, mark the other higher categories, as appropriate.

Part II: Agreements or Arrangements

Report your agreements or arrangements for: continuing participation in an employee benefit plan (e.g. 401k, deferred compensation; (2) continuation payment by a former employer (including severance payments); (3) leaves of absence; and (4) future employment. See instructions regarding the reporting of negotiations for any of these arrangements or benefits

None [ ]

	Status and Terms of any Agreement or Arrangement	Parties	Date
Example:	Pursuant to partnership agreement, will receive lump sum payment of capital account & partnership share calculated on service performed through 1/00.	Doe Jones & Smith, Hometown, State	7/85
1	ABA Members Retirement Program 401(k) - (Terminated-no further contributions by filer or employer)	Kellogg, Huber, Hansen, Todd-Law Firm	12/98
2	Vitria, Tech.- Manulife 401(k) (Terminated -no further contrubutions by filer or employer)	Vitria Technology, Inc.	2000
3			
4			
5			
6			

Prior Editions Cannot Be Used.

SF 278 (Rev. 03/2000)
5 C.F.R. Part 2634
U.S. Office of Government Ethics

Reporting Individual's Name		Page Number
Powell, Benjamin A.	**SCHEDULE D**	8

Part I: Positions Held Outside U.S. Government

Report any positions held during the applicable reporting period, whether compensated or not. Positions include but are not limited to those of an officer, director, trustee, general partner, proprietor, representative, employee, or consultant of any corporation, firm, partnership, or other business enterprise or any non-profit organization or educational institution. **Exclude** positions with religious, social, fraternal, or political entities and those solely of an honorary nature.

None [X]

	Organization (*Name and Address*)	Type of Organization	Position Held	From (Mo., Yr.)	To (Mo., Yr.)
Examples:	Nat'l Assn. of Rock Collectors, NY, NY	Non-profit education	President	6/92	Present
	Doe Jones & Smith, Hometown, State	Law firm	Partner	7/85	1/00
1					
2					
3					
4					
5					
6					

Part II: Compensation In Excess Of $5,000 Paid by One Source

Report sources of more than $5,000 compensation received by you or your business affiliation for services provided directly by you during any one year of the reporting period. This includes the names of clients and customers of any corporation, firm, partnership, or other business enterprise, or any other non-profit organization when you directly provided the services generating a fee or payment of more than $5,000. You need not report the U.S. Government as a source.

Do not complete this part if you are an Incumbent, Termination Filer, or Vice Presidential or Presidential Candidate

None [X]

	Source (*Name and Address*)	Brief Description of Duties
Examples:	Doe Jones & Smith, Hometown, State	Legal services
	Metro University (client of Doe Jones & Smith), Moneytown, State	Legal services in connection with university construction
1		
2		
3		
4		
5		
6		

Prior Editions Cannot Be Used.

SSCI# 2005 2561

June 13, 2005

Corin R. Stone
Deputy General Counsel and
Designated Agency Ethics Official
Office of the Director of
National Intelligence
Washington, DC 20511

Dear Ms. Stone:

The purpose of this letter is to describe the steps that I intend to take to avoid any actual or apparent conflicts of interest in the event that I am confirmed for the position of General Counsel, Office of the Director of National Intelligence.

As required by 18 U.S.C. 208(a), I will not participate personally and substantially in any particular matter that has a direct and predictable effect on my financial interests or those of any other person whose interests are imputed to me, unless I first obtain a written waiver, pursuant to 18 U.S.C. 208(b)(1), or qualify for a regulatory exemption, pursuant to 18 U.S.C. 208(b)(2). I understand that the interests of the following persons are imputed to me: my spouse, minor children, or any general partner; any organization in which I serve as an officer, director, trustee, general partner or employee; and any person or organization with which I am negotiating or have an arrangement concerning prospective employment.

In order to avoid potential conflicts of interest under section 208, I agree to divest my holdings in Hewlett Packard and Sun Microsystems within 90 days of my confirmation. Until these divestitures have been completed, I will not participate personally and substantially in any particular matter that will have a direct and predictable effect on these entities, unless I first obtain a written waiver or qualify for a regulatory exemption.

I understand that in the event of a conflict of interest, I will disqualify myself, in writing, from taking any official action that would have a direct and predictable effect on that financial interest. In addition, if you as DAEO determine that recusal and screening is not a viable option to preclude a conflict of interest under applicable Office of Government Ethics regulations, I will take the further steps you deem necessary to eliminate the conflicting interest, including divestiture if necessary and possible.

Sincerely,

Benjamin A. Powell

○