AUTHENTICATED
U.S. GOVERNMENT
INFORMATION
GPO

S. HRG. 109–723

AN OVERVIEW OF THE GLOBAL NUCLEAR ENERGY PARTNERSHIP (GNEP), INCLUDING PROPOSED ADVANCED REACTOR TECHNOLOGIES FOR RECYCLING NUCLEAR WASTE

HEARING

BEFORE A

SUBCOMMITTEE OF THE

COMMITTEE ON APPROPRIATIONS

UNITED STATES SENATE

ONE HUNDRED NINTH CONGRESS

SECOND SESSION

SPECIAL HEARING

SEPTEMBER 14, 2006—WASHINGTON, DC

Printed for the use of the Committee on Appropriations

Available via the World Wide Web: http://www.gpoaccess.gov/congress/index.html

U.S. GOVERNMENT PRINTING OFFICE

30–869 PDF WASHINGTON : 2006

For sale by the Superintendent of Documents, U.S. Government Printing Office
Internet: bookstore.gpo.gov Phone: toll free (866) 512–1800; DC area (202) 512–1800
Fax: (202) 512–2250 Mail: Stop SSOP, Washington, DC 20402–0001

COMMITTEE ON APPROPRIATIONS

THAD COCHRAN, Mississippi, *Chairman*

TED STEVENS, Alaska
ARLEN SPECTER, Pennsylvania
PETE V. DOMENICI, New Mexico
CHRISTOPHER S. BOND, Missouri
MITCH McCONNELL, Kentucky
CONRAD BURNS, Montana
RICHARD C. SHELBY, Alabama
JUDD GREGG, New Hampshire
ROBERT F. BENNETT, Utah
LARRY CRAIG, Idaho
KAY BAILEY HUTCHISON, Texas
MIKE DeWINE, Ohio
SAM BROWNBACK, Kansas
WAYNE ALLARD, Colorado

ROBERT C. BYRD, West Virginia
DANIEL K. INOUYE, Hawaii
PATRICK J. LEAHY, Vermont
TOM HARKIN, Iowa
BARBARA A. MIKULSKI, Maryland
HARRY REID, Nevada
HERB KOHL, Wisconsin
PATTY MURRAY, Washington
BYRON L. DORGAN, North Dakota
DIANNE FEINSTEIN, California
RICHARD J. DURBIN, Illinois
TIM JOHNSON, South Dakota
MARY L. LANDRIEU, Louisiana

BRUCE EVANS, *Staff Director*
CLAYTON HEIL, *Deputy Staff Director*
TERRENCE E. SAUVAIN, *Minority Staff Director*

SUBCOMMITTEE ON ENERGY AND WATER, AND RELATED AGENCIES

PETE V. DOMENICI, New Mexico, *Chairman*

THAD COCHRAN, Mississippi
MITCH McCONNELL, Kentucky
ROBERT F. BENNETT, Utah
CONRAD BURNS, Montana
LARRY CRAIG, Idaho
CHRISTOPHER S. BOND, Missouri
KAY BAILEY HUTCHISON, Texas
WAYNE ALLARD, Colorado

HARRY REID, Nevada
ROBERT C. BYRD, West Virginia
PATTY MURRAY, Washington
BYRON L. DORGAN, North Dakota
DIANNE FEINSTEIN, California
TIM JOHNSON, South Dakota
MARY L. LANDRIEU, Louisiana
DANIEL K. INOUYE, Hawaii

Professional Staff

SCOTT O'MALIA
ROGER COCKRELL
EMILY BRUNINI
DREW WILLISON *(Minority)*
NANCY OLKEWICZ *(Minority)*

CONTENTS

	Page
Opening Statement of Senator Pete V. Domenici	1
Statement of Senator Wayne Allard	2
Statement of Dennis Spurgeon, Assistant Secretary for Nuclear Energy, Office of Nuclear Energy, Department of Energy	3
Prepared Statement	6
GNEP Overview	6
Future of Nuclear Energy in the United States	7
Spent Fuel Recycling	9
Statement of Dr. Alan Hanson, Executive Vice President, Technology and Used-Fuel Management, AREVA NC, Inc.	11
Prepared Statement	14
The Comparable Costs of Recycling	14
The National Benefits of Recycling	15
GNEP Can Be a Successful Public-Private Enterprise	16
Industry Can Begin Meeting the Objectives of GNEP	16
Letter From Dr. Alan Hanson	17
Statement of Matthew Bunn, Harvard University, Belfer Center for Science and International Affairs, John F. Kennedy School of Government, Cambridge, Massachusetts	23
Prepared Statement	26
Assessing the Benefits, Costs, and Risks of Near-Term Reprocessing and Alternatives	26
Recycling in Context	27
Costs and Financing	27
Proliferation Risks	28
Safety and Security	31
Environmental Impact	31
Sustainability	31
Uranium Supply	32
Repository Space Supply	32
Commercial-scale Demonstrations and the GNEP R&D Program	34
Recommendations	36
Statement of Kelly Fletcher, GE Global Research, Sustainable Energy Advanced Technology Leader	40
Prepared Statement	42
Historical Overview	43
PRISM Technology	44
PRISM Technology for the Future	48
Advanced Reactors Program	51
Schedule and Cost Impacts to GNEP	52
Industry Involvement	54
Support of Nuclear Power	55
GNEP Change in Scope	56
Technical Capability	57
Estimated Time for Start of Program	58

AN OVERVIEW OF THE GLOBAL NUCLEAR ENERGY PARTNERSHIP (GNEP), INCLUDING PROPOSED ADVANCED REACTOR TECHNOLOGIES FOR RECYCLING NUCLEAR WASTE

THURSDAY, SEPTEMBER 14, 2006

U.S. SENATE,
SUBCOMMITTEE ON ENERGY AND WATER,
AND RELATED AGENCIES,
COMMITTEE ON APPROPRIATIONS,
Washington, DC.

The subcommittee met at 9:30 a.m., in room SD–138, Dirksen Senate Office Building, Hon. Pete V. Domenici (chairman) presiding.

Present: Senators Domenici and Allard.

OPENING STATEMENT OF SENATOR PETE V. DOMENICI

Senator DOMENICI. This hearing I want to follow up on the Department's evolving strategy to address spent nuclear fuel and determine the level of coordination between GNEP and the Yucca Mountain program. I think you all know that's very important.

One month ago the Department undertook several solicitations to begin the site selection process and to determine the level of interest in the development—or the developing—the consolidation at fuel treatment facility and an advanced burner reactor.

This move to a commercial facility is a major departure from the Department's original R&D roadmap in February of this year, and has the potential to significantly accelerate the development of recycling technology and bring it more in line with the plan for Yucca Mountain. Accelerating the process, this process, will certainly change the selection of technologies and I need to be assured that the Department is making a sound decision regarding non-proliferation.

We also need to be assured that the department has the technical capability to fully realize the GNEP goals of closing the fuel cycle and significantly reducing the amount of spent fuel. I think we need to know more about the integration—integrating advanced reactors into the process and having a frank discussion about the Department's technology capability to develop high quality actinide fuel.

Secretary Spurgeon, I understand the Department received over a dozen responses to your recent site selection RFP. That is a very encouraging sign and I look forward to learning more about this.

Ladies and gentlemen we are at a crossroads in our national energy policy. Building on the success on the Energy Policy Act of 2005 we can choose to make the investment and developing diversified energy resources or we can choose to maintain the status quo. With regard to nuclear power the provisions in the EPACT which encourage development of new nuclear plants are having a positive effect. Already 12 utilities or consortia are preparing at least 19 applications for as many as 30 new reactors. In addition, 50 percent of the existing reactor fleet will receive 20-year license renewals.

The existing nuclear fleet provides the cheapest source of power—other than hydroelectric—and like hydro does not contribute to greenhouse emissions. Therefore it is clear to me that one nuclear strategy must not only address new plants, but must solve the waste problem as well.

Let me be clear that I believe it was a mistake to abandon the nuclear fuel recycling in 1978 and that clearly our so-called leadership did not make a bit of difference had others decided to develop the process without us. I support GNEP as a responsible solution to addressing our spent fuel needs. I also believe this strategy must be closely aligned with the development of Yucca Mountain in the near term. I would hope the Federal Government lives up to its commitment under the Nuclear Waste Policy Act and begins to take responsibility for waste stored at reactor sites nationwide.

Today, we hear from four witnesses with vast experience in the world of nuclear power to determine if the Department is on the right path with GNEP. Witness Dennis Spurgeon, Assistant Secretary Office of Nuclear Energy, will update the committee on the evolving GNEP strategy and provide feedback on the recent site solicitations.

Dr. Alan Hanson, Executive Vice President for Technology and Used Fuel Management, AREVA, will provide perspective on the most recent economic analysis of recycling technology and the opportunities to deploy commercial spent fuel recycling technology.

And Mr. Matt Bunn of Harvard University will provide testimony on the economics of nuclear reprocessing and address proliferation concerns.

Mr. Kelly Fletcher, Global Research and Advanced Technology Leader, General Electric will provide testimony on investments the Department of Energy has made in advanced reactors and the viability of the DOE strategy.

I appreciate the participation of the witnesses and request that you keep your testimony to 5 minutes—perhaps slightly more—as your full statement will be included in the record and we can spend more time talking together for a more complete record.

Unless one of my colleagues would like to make an opening statement, I am going to proceed to the first witnesses.

STATEMENT OF SENATOR WAYNE ALLARD

Senator ALLARD. Mr. Chairman, I'd just like to make just some very brief comments.

Senator DOMENICI. Please do.

Senator ALLARD. First of all, I want to congratulate you on a very fine opening statement this morning. I think you and I agree on the importance of having a sound energy plan for this Nation. I want to applaud you for the leadership in that regard. Obviously nuclear energy has to be a vital part of that—in my view—and I think you agree with that. And, if we are going to have nuclear energy, we have to have a sound process where we take the waste and deal with the waste problem. So, I want to thank you for holding this important hearing.

As I stated during the hearing earlier this year on the global nuclear energy plan, I believe that nuclear energy is one of the most promising and under-utilized energy sources available to us and I am pleased we are taking another look at the administration's GNEP plan and pleased to see that we are looking particularly at the waste recycling portion of the plan.

When the United States stopped nuclear reprocessing in the 1970's, England, France, and Japan, as we all know, kept moving forward. They are now operating several successful reprocessing facilities. I visited some of these sites in France and England where I was able to discuss much of the reprocessing technology and to see it in action. It is my understanding that newer processes, ones that we would be using are even more advanced, and it's my understanding that potentially these processes are safe and efficient and ultimately result in a much smaller waste stream than the nuclear energy production process. This results in lessened storage requirements down the road and because much of the spent fuel is recycled, less new fuel must be acquired.

Again, thank you Mr. Chairman for your holding this hearing. I look forward to continuing our work on this important issue. To the panel I going to have a vote here in another committee, so I'm not going to be able to be here for your whole testimony, but I'm going to read it and I'm very interested in this issue and I look forward to what you have to say. I appreciate your being willing to show up here and share your thoughts with us this morning. Thank you Mr. Chairman.

Senator DOMENICI. Thank you, Senator. Let us proceed. Assistant Secretary Spurgeon.

STATEMENT OF DENNIS SPURGEON, ASSISTANT SECRETARY FOR NUCLEAR ENERGY, OFFICE OF NUCLEAR ENERGY, DEPARTMENT OF ENERGY

Mr. SPURGEON. Chairman Domenici, Senator Allard, it is a pleasure to be here today to discuss the future of nuclear energy in the United States and the Global Nuclear Energy Partnership, or GNEP, through which the Department proposes to develop and deploy an integrated recycling capability.

Mr. Chairman, you have been a strong and appreciated voice in calling for a nuclear renaissance in the United States and for expanded use of nuclear power across the world. I appreciate this committee's long-standing leadership and support for the Department's nuclear energy program.

With 130 nuclear powerplants under construction or planned around the world, clearly many countries—including China, India, Russia, and others—see the benefits of nuclear energy and are moving forward with ambitious nuclear power programs. The same

can be said for the United States. For the first time in decades, U.S. utilities are developing the detailed plans to build a new generation of nuclear power plants. At current count almost 30 new nuclear powerplants are in the planning process for construction beginning over the next decade.

What is prompting this growth? First, in the United States, industry has done the hard work of establishing a solid foundation for a new generation of plants. Demand and rising costs of energy, particularly volatility of natural gas, along with concerns about carbon dioxide emissions has made nuclear energy attractive. Partnerships between government and industry have successfully worked to address the final financial and regulatory impediments that the first purchasers of new nuclear plants face.

During the 5 months that I have been Assistant Secretary, I have worked to focus the priorities of my office on what I believe to be our most important responsibility—first, serving as a catalyst for a new generation of nuclear power plants in the United States. That is what we are doing with Nuclear Power 2010 and implementing the provisions of the Energy Policy Act of 2005. Second, we are paving the way for safe and secure expansion of nuclear power in other parts of the world. I believe this is the compelling challenge of our time and I want to work closely with you and the committee as we move forward.

We are making progress on both fronts. I am confident that we will see the first announcement of new United States nuclear power plants before President Bush leaves office. But it is important for our future that nuclear energy expand in the world in a way that is safe and secure, in a way that will result in nuclear materials or technologies being used only for peaceful purposes—energy and security go hand in hand.

GNEP addresses two major issues that have limited the use of nuclear power in the later half of the 20th century: how to responsibly use sensitive nuclear technologies in a way that does not threaten global security and how to safely manage high level waste. GNEP is complementary to the Department's efforts to license and open Yucca Mountain. For the long-term viability of our nuclear generating capacity we must proceed with a geologic repository. The Department is pursuing initial operation of Yucca Mountain as early as 2017 so that we can begin to fulfill our obligation to dispose of spent fuel and other nuclear wastes from our defense program. Whether we recycle or not, we must have Yucca Mountain open as soon as possible.

This is one of the reasons I believe we must develop and deploy advanced recycling technologies as soon as possible—technologies that will enable us to recover the usable material contained in spent fuel, and reduce the volume, heat load, and toxicity of waste requiring emplacement in the geologic repository. In so doing we can extend the capacity of Yucca Mountain such that additional repositories may not be needed this century.

We are pursuing development and deployment of integrated spent fuel recycling facilities in the United States. These are technologies that do not result in separated plutonium stream. Specifically, the Department proposes to develop and deploy the uranium extraction plus or UREX+ technology or comparable variants to

separate the useable materials contained in spent fuel from the waste products. Based on considerable domestic and international experience, we also propose to deploy a fast reactor capable of consuming or destroying those usable products from the spent fuel while producing electricity.

Based on the positive international and private sector response to GNEP, we believe there are advanced technologies available to recycle used nuclear fuel that may be ready for deployment in conjunction with those currently under development by DOE. For example, portions of the UREX+ technology are well understood today, while other portions, such as group separation of transuranics from lanthanides, require additional research and development. Also, industry may have similar advanced technologies that are closer to full-scale deployment. As such, we want to examine the feasibility of proceeding with those portions of the technology that are well understood while completing the R&D for the others. These two parallel tracks would provide technology development and R&D efforts necessary to support full-scale deployment and advanced recycling concepts.

Last month, DOE issued two requests for Expressions of Interest from domestic and international industry, seeking to investigate the feasibility, interest and capacity of industry to deploy an integrated spent fuel recycling capability consisting of a Consolidated Fuel Treatment Center and an Advanced Burner Reactor. The integrated recycling facilities would include process storage of spent fuel prior to its recycling. This process storage would be on a scale proportionate to the scale of recycling operations.

We are now in the process of reviewing industry's response to last month's request for expressions of interest (EOI). We received 18 such responses, representing both U.S. and international companies, including several nuclear suppliers. Based on our limited review thus far, I can tell you that we are very encouraged by the response from industry and we look forward to establishing a working relationship with industry in fiscal year 2007.

Pursuant to the report language contained in the fiscal year 2006 Energy and Water Development Appropriations conference report, we issued a funding opportunities announcement seeking grant applications from private and/or public entities interested in hosting integrated spent fuel recycling facilities. Last week, we received 14 grant applications from public and private entities proposing eight DOE and six non-DOE sites, representing essentially each geographic region of the country. We are very pleased with this response. Several of these applications included indications of support by State elected officials. We anticipate awarding grants later this fall that will provide funds to entities for site evaluation studies. The studies will be completed over the 90 days following the award and will provide input to the National Environmental Policy Act documentation to be prepared for the integrated spent fuel recycling facilities.

Senator DOMENICI. Did that many surprise you?

Mr. SPURGEON. We were very pleased with that response because we made it very clear, Mr. Domenici, that we wanted sites proposed by public/private entities that had support for their submissions. This represents somewhat of a change from how we solicited

Expressions of Interest in the past, but we were very pleased with that response, sir.

Senator DOMENICI. Thank you.

PREPARED STATEMENT

Mr. SPURGEON. Finally, I would note that the technical underpinnings of GNEP are found in the work of the Advanced Fuel Cycle Initiative Program (AFCI) over the past several years. To further advance and guide the GNEP effort, we have developed an initial technology development program plan that establishes the work to be accomplished, the applied research priorities, and the milestones, drawing upon the expertise of our national laboratories. This plan will be finalized over the next 3 months and execution will extend from the Department down to the multi-laboratory teams. This technology plan will evolve as industry is integrated into the GNEP program.

Mr. Chairman, we are making progress and we respectfully request support and which we know we have received to date, sir, for full funding for GNEP in fiscal year 2007 to continue the progress forward. I look forward to answering your questions, sir.

[The statement follows:]

PREPARED STATEMENT OF DENNIS SPURGEON

Chairman Domenici, Senator Reid, and members of the subcommittee, it is a pleasure to be here today to discuss the future of nuclear energy in the United States. I will discuss the Global Nuclear Energy Partnership or GNEP, through which the Department proposes to accelerate development and deployment of an integrated recycling capability in the United States.

First, I will provide a brief overview of our GNEP efforts.

Second, I will discuss the expansion of nuclear power reactors in the United States.

Third, I will discuss the status of our efforts to plan for advanced recycling of spent fuel to accommodate the safe expansion of nuclear power.

GNEP OVERVIEW

As you know, I have been in the position of Assistant Secretary since April. During this time, I have worked to focus the priority of Office of Nuclear Energy on what I believe is our most important responsibility—serving as a catalyst for a new generation of nuclear plants in the United States. We are making progress on this front and in the longer term global expansion of nuclear energy through GNEP.

I am working with industry and the national laboratories to restore the United States to a position of international leadership in nuclear power to meet the goals of GNEP. Dr. Paul Lisowski is now on-board as my Deputy Program Manager of GNEP. Paul assumes this position after 20 years at Los Alamos National Laboratory, including 10 years as a senior manager responsible for the Accelerator Production of Tritium Project and operation of the Los Alamos Neutron Science Center. Paul comes to this position with significant experience in fuel cycle technologies, in particular transmutation. He has a proven track record managing highly complex scientific and national security projects and programs and I am pleased to have him on our team.

GNEP is both a major research and technology development initiative, and a major international policy partnership initiative. It addresses two major issues that have suppressed the use of nuclear power in the latter half of the 20th century: how to responsibly use sensitive technologies in a way that does not threaten global security, and how to safely dispose of nuclear waste. The technology R&D addresses primarily the waste issue. International collaboration and diplomacy harnesses new technologies and policies to ensure nuclear power is used responsibly.

That is why we have proposed to establish an international framework to bring the benefits of nuclear energy to the world safely and securely without all countries having to invest in the complete fuel cycle—that is, enrichment and reprocessing. We propose to create an approach, which provides fuel and reactors that are appro-

priately sized for the grid and the industry needs of the country. Next week, I will attend the 50th anniversary of the International Atomic Energy Agency General Conference. For the first time in many years, a key focus is on how to facilitate the safe and secure expansion of nuclear energy. The IAEA has planned a special event to recognize the 50th anniversary. The special event will focus on developing an assured fuel cycle.

We also seek to develop international fuel leasing arrangements to assure the availability of fuel and international partnerships to develop advanced recycling on productive approaches, incentives and safeguards. To encourage countries to forgo fuel cycle activities, they must be assured of credible international fuel supplies backed by designated supplies and governmental entities. These efforts backstop the proven performance of a well-functioning international commercial fuel sector. In addition, in bringing the benefits of nuclear energy to the world, we want to work with other countries to facilitate export of reactors sized to the grids and utility needs of those countries. These reactors would have adequate safety and safeguards integrated into the design.

As you know, the Department is pursuing development and deployment of integrated spent fuel recycling facilities in the United States. These are technologies that do not result in a separated plutonium stream. Specifically, the Department proposes to develop and deploy the uranium extraction plus (UREX+) technology to separate the usable materials contained in spent fuel from the waste products. We also propose to deploy a fast reactor capable of consuming those usable products from the spent fuel while producing electricity.

Based on international and private sector response to GNEP, we believe there may be advanced technologies available to recycle used nuclear fuel ready for deployment in conjunction with those currently under development by DOE. In light of this information, DOE is investigating the feasibility of these advanced recycling technologies by proceeding with commercial demonstrations of these technologies. The technology, the scale and the pace of the technology demonstrations will depend in part on industry's response, including the business aspects of how to bring technology to full scale implementation.

DOE will draw upon the considered review of these technologies in the Advanced Fuel Cycle Program (AFCI) program over the past several years. Consistent with the fiscal year 2006 Energy and Water Development Conference Report H.R. 109–275, we are also exploring potential locations in the United States where the integrated spent fuel recycle capability and related process storage could be successfully sited and demonstrated.

We have the opportunity now to invest in an advanced fuel cycle that can impact waste management in truly significant ways. Limited recycle with mixed oxide fuel in thermal reactors or existing light water reactors, in our view, does not offer the long-term benefits for the geological repository or support the same forward-looking advantages for the revival of U.S. nuclear leadership for the 21st century.

The Department respectfully requests Congress' support for full funding for GNEP in order to continue the forward progress needed to inform a decision by the Secretary of Energy in mid-2008 on whether or not to proceed with design, construction and operation of prototype spent fuel recycling facilities. If successful, the Department will have set a course to re-establish commercial-scale spent fuel recycling capability in the United States. This effort will greatly expand the supply of affordable, safe, clean nuclear power around the world, while enhancing safeguards to prevent misuse of nuclear material and assuring the availability of Yucca Mountain for generations to come.

FUTURE OF NUCLEAR ENERGY IN THE UNITED STATES

The resurgence of nuclear power is a key component of President Bush's Advanced Energy Initiative and a key objective contained in the President's National Energy Policy. The reasons for this are clear. As we enter a new era in energy supply, our need for energy—even with ambitious energy efficiency and conservation measures—will continue to grow as our economy grows. Electricity demand is expected to double over the next 20 years globally (EIA International Energy Outlook 2006, p. 63) and grown by 50 percent in the United States (EIA Annual Energy Outlook 2006, Table A–8). While nuclear power is not the only answer, there is no plausible solution that doesn't include it.

Our country benefits greatly from nuclear energy. One hundred and three nuclear plants operate today providing one-fifth of the Nation's electricity. These plants are emissions-free, operate year-round in all weather conditions, and are among the most affordable, reliable, and efficient sources of electricity available to Americans. Nuclear, like coal, is an important source of baseload power and is the only cur-

rently available technology capable of delivering large amounts of power without producing air emissions. U.S. nuclear power plants displace millions of metric tons of carbon emissions each year.

Over the last 15 years, industry has done an exceptional job improving the management and operation of U.S. plants, adding the equivalent of 26[1] 1,000 megawatt units during this timeframe without building a single new plant (EIA Annual Energy Review, 2004). U.S. nuclear plants have a solid record of safety, reliability, availability, and efficiency. Longer periods between outages, reduction in the number of outages needed, power up-rates, use of higher burn-up fuels, improved maintenance, and a highly successful re-licensing effort extending the operation of these plants another 20 years, have collectively improved the economics of nuclear energy. Today, nuclear energy is among the cheapest electricity available on the grid, at 1.72 cents per kilowatt-hour (www.nei.org).

Despite these successes and growing recognition of the benefits and need for more nuclear energy, industry has not ordered a new nuclear plant since 1973 (an additional plant ordered in 1978 was subsequently cancelled). In fact, not much baseload capacity—whether nuclear, hydro-electric, or coal—has been ordered since the 1970's, other than some coal-fired plants located close to the mouth of the coal mine in the western United States. In the 1980's, a large number of commercial orders for nuclear plants were cancelled and no new orders were placed. This was because of financial and regulatory challenges that significantly drove up the capital cost of nuclear plants and delayed their startup. In addition, investment premiums were so high that capital markets could no longer support nuclear power plant projects.

Today the conditions are significantly different, with volatile natural gas prices, increasing demand for electricity, and concerns about clean air, utilities and investors are planning for a new generation of nuclear plants in the United States.

To address regulatory uncertainties that first purchasers of new plants face, in 2002, the Department launched the Nuclear Power 2010 program as a public-private partnership aimed at demonstrating the streamlined regulatory processes associated with licensing new plants. Under Nuclear Power 2010, the Department is cost-sharing the preparation of early site permits, expected to be completed in 2007 and early 2008. The Department is also cost-sharing the preparation of a total of two combined Construction and Operating Licenses (COLs) for two consortia: Dominion Energy, which is examining the North Anna site in Virginia and NuStart—a consortium of ten utilities and two vendors—which will use DOE funding to move a COL forward on either the Bellefonte site in Alabama or the Grand Gulf site in Mississippi. Collectively, these two teams represent the operators of two-thirds of nuclear plants operating today in the United States.

Under this program, we are also jointly funding the design certification and completion of detailed designs for Westinghouse's Advanced Passive Pressurized Water Reactor (AP 1000), General Electric's Economic Simplified Boiling Water Reactor (ESBWR), and site-specific analysis and engineering required to obtain COLs from the NRC. The two COL applications are planned for submission to the NRC in late 2007 and industry is planning for issuance of the NRC licenses by the end of 2010.

With dozens of new nuclear plants under construction, planned or under consideration world-wide, many countries around the world are clearly moving forward with new nuclear plants (www.world-nuclear.org/info/reactors.htm). And it is no different here in the United States. We are nearing completion of the initial phase of preparations for a new generation of nuclear plants. Through the Nuclear Power 2010 program and incentives contained in the Energy Policy Act of 2005, government and industry are working together to effectively address regulatory and financial impediments that the first purchasers of new plants face.

As a result, I am confident that we will see the first announcements of new U.S. plants before President Bush leaves office. I am also confident that we will see construction begin by 2010. Already we are seeing indications that new orders are in the planning stages, with utilities announcing procurements of long-lead components. Earlier last month, the Nuclear Regulatory Commission indicated that it has received letters of intent from potential applicants for a total of 19 site-specific COLS for up to 27 reactors. This progress would not have been possible without NP 2010 and incentives like risk insurance, which respectively mitigate the financial and regulatory risks facing the first few new nuclear power facilities.

However, for the long-term viability of our nuclear generating capacity, we must proceed with a geologic repository. We are pursuing initial operation of Yucca Mountain as early as 2017 so that we can begin to fulfill our obligation to dispose of the approximate 55,000 metric tons of spent fuel already generated and approximately 2,000 metric tons generated annually. Whether we recycle or not, we must have

[1] Increase in nuclear generation between 1990 and 2005 with a 90 percent capacity factor.

Yucca Mountain open as soon as possible. But as you know, the statutory capacity of Yucca Mountain will be oversubscribed by 2010 and without the prospect of spent fuel recycling, simply maintaining the existing generating capacity in the United States will require additional repositories.

This is one of the key reasons why I believe we must accelerate the development and deployment of advanced recycling technologies—technologies that will enable us to reuse our valuable energy resources and that extend the capacity of Yucca Mountain for generations to come. But it also important for our own future that nuclear energy expands in the world in a way that is safe and secure, in a way that will not result in nuclear materials or technologies used for non-peaceful purposes.

SPENT FUEL RECYCLING

The United States operates a once-through fuel cycle, meaning that the fuel is used once and then disposed of without further processing. In the 1970's, the United States stopped the old form of reprocessing and then committed to not separate plutonium, a nuclear proliferation concern. But the rest of the nuclear economies—France, Japan, Great Britain, Russia and others engage in recycling, a process in which spent fuel is processed and the plutonium and uranium are recovered from the spent fuel to be recycled back through reactors. As a result, the world today has a buildup of nearly 250 metric tons of separated civilian plutonium. The world also has vast amounts of spent fuel and we risk the continued spread of separated plutonium via fuel cycle separation technologies. Furthermore, recent years have seen the unchecked spread of enrichment technology around the world.

Having ceased reprocessing of spent fuel for several decades, with anticipated growth of nuclear energy in the United States and abroad, the United States is now considering a new approach that includes recycling of spent nuclear fuel using advanced technologies to increase proliferation resistance, recovering and reusing portions of spent fuel, and reducing the amount of wastes requiring permanent geological disposal. Since 2000, Congress has appropriated funds for the AFCI for research and development on a number of different recycle concepts.

Within the AFCI program, we have had considerable success with the UREX+ technology, demonstrating the ability at the bench and laboratory scales to separate uranium from the spent fuel, at a very high level of purification that would allow it to be recycled for re-enrichment, stored in an unshielded facility, or simply buried as a low-level waste. With UREX+, the long-lived fission products, technetium and iodine, could be separated and immobilized for disposal in Yucca Mountain. Next, the short-lived fission products cesium and strontium are extracted and prepared for decay storage, where they are allowed to decay until they meet the requirements for disposal as low-level waste. Finally, transuranic elements (plutonium, neptunium, americium and curium) are separated from the remaining fission products, fabricated into fast reactor transmutation fuel, and consumed or destroyed in a fast reactor. After these elements are consumed, only small amounts would require emplacement in a geologic repository. This approach is anticipated to increase the effective capacity of the geologic repository by a factor of 50 to 100.

Last month, DOE issued two requests for Expressions of Interest from domestic and international industry, seeking to investigate the interest and capacity of industry to deploy an integrated spent fuel recycling capability consisting of two facilities:

—A Consolidated Fuel Treatment Center, capable of separating the usable components contained in light water spent fuel from the waste products;

—An Advanced Burner Reactor, capable of consuming those usable products from the spent fuel while generating electricity.

The Department asked industry to provide input on the scale at which the technologies should be proven. Ultimately, as in the initial plan reported to the Congress in May, the Department ultimately seeks the full commercial-scale operations of these advanced technologies. It is premature, however, to say exactly what form or size the recycling facility will take until we analyze important feedback recently received from industry.

The integrated recycling facilities would include process storage of spent fuel prior to its recycling, on a scale proportionate to the scale of recycling operations. A third facility, the Advanced Fuel Cycle Facility—would be designed and directed through the Department's national laboratories and would be a modern state-of-the-art fuels laboratory designed to serve the fuels research needs to support GNEP.

We have solicited industry expressions of interest in order to leverage the experience of existing, proven capabilities of industry and fuel cycle nations to develop advanced recycling technologies for GNEP. These entities will be critical in helping bring these facilities to operation in the United States, while meeting GNEP goals. We are also examining the feasibility of incorporating advanced technologies that

are closer to deployment, in conjunction with those currently under development by DOE, to reduce the time and costs for commercial deployment.

We are now in the process of reviewing industry's response to last month's request for Expressions of Interest. Based on our limited review thus far, I can tell you that industry has responded with positively and we look forward to working with industry.

In addition, last month the Department issued a Financial Assistance Funding Opportunities Announcement, seeking applications by September 7, 2006, from private and/or public entities interested in hosting GNEP facilities. Specifically, the Department will award grants later this fall for site evaluation studies. As this committee knows, Congress made $20 million available (H.R. 109–474, fiscal year 2006 Energy and Water Development Appropriations bill), with a maximum of $5 million available per site. Because we will need process storage for fuel to be treated, part of the purpose of this Financial Assistance Funding Opportunity Announcement is to understand the ability of and interest in proposed sites receiving fuel for process storage. The information generated from these site evaluation studies may be used in the preparation of National Environmental Policy Act (NEPA) documentation that will evaluate potential environmental impacts from each proposed GNEP facility.

The Department is continuing to plan and prepare for the development of appropriate NEPA documentation to support activities under GNEP. The Department issued an Advance Notice of Intent to prepare an environmental impact statement in March 2006 and is preparing to issue a Notice of Intent in the fall 2006. The current plan is to complete the NEPA process in 2008, assisting in Departmental decisions about whether to move forward with integrated recycling facilities, and if so, where to locate them.

The overall GNEP effort involves several program secretarial offices, including the National Nuclear Security Administration (NNSA). For example, NNSA will provide key assistance in assuring that safeguards approaches and technologies are incorporated into the facilities early in the planning process. In addition, while DOE currently sponsors university research grants through its R&D programs via the Nuclear Energy Research Initiative, universities will be engaged in GNEP-funded research. Industry will also be engaged as the program progresses through the design process.

Designing, developing and deploying the separations, fuels, and reactor technologies requires that DOE carry out a variety of research, ranging from technology development for those processes initially identified to longer-term research and development on alternatives for risk reduction. In addition, the Office of Science held three technical workshops in July 2006 on basic science in support of nuclear technology. Although not limited solely to GNEP, the results of this activity will help guide the long-term R&D agenda for closing the fuel cycle. Furthermore, advanced simulation is expected to play an important role in the development of this program, as it does today in many leading commercial industries. DOE organized a workshop on simulation for the nuclear industry at Lawrence Livermore National Laboratory which was chaired by Dr. Robert Rosner, Director of Argonne National Laboratory and Dr. William Martin from the University of Michigan. We also participated in a nuclear physics workshop sponsored by the Office of Science.

Systems analysis also forms an important part of the ongoing GNEP effort and will have an increased role during the next 2 years. Through systems analysis, we will investigate several key issues, including life cycle costs, rate of introduction of fast reactors and separations facilities, a detailed study of the technical requirements for GNEP facilities and the complete fuel cycle, and how to ensure that they relate to the top level goals of the program. The results of these analyses are essential to establishing the basis for each key decision in the AFCI program and will have a profound effect on GNEP program planning.

In short, there has been considerable progress on the Department's fiscal year 2006 efforts on GNEP. The Department has continued applied research and technology development efforts in concert with the Department's national laboratories. The Department has engaged the international community to identify areas of potential cooperation, cost-sharing, and support.

In fiscal year 2007, the Department seeks to continue the research and development activities necessary to support GNEP, including issues associated with developing transmutation fuel. The Department will also continue work on conceptual designs for the Advanced Fuel Cycle Facility.

CONCLUSION

In closing, the United States can continue down the same path that we have been on for the last 30 years or we can lead to a new, safer, and more secure approach to nuclear energy, an approach that brings the benefits of nuclear energy to the world while reducing vulnerabilities from proliferation and nuclear waste. We are in a much stronger position to shape the nuclear future if we are part of it. This is an ambitious plan and we are just at the initial stages of planning. I look forward to coming before the committee in the future as the GNEP program plans take shape.

Senator DOMENICI. Thank you very much. Dr. Hanson.

STATEMENT OF DR. ALAN HANSON, EXECUTIVE VICE PRESIDENT, TECHNOLOGY AND USED-FUEL MANAGEMENT, AREVA NC, INC.

Dr. HANSON. Thank you. Mr. Chairman, Senator Bennett, my name is Alan Hanson, I'm Executive Vice President for Technology and Used Fuel Management at AREVA, Inc. I appreciate this opportunity to testify before you today. I am very pleased to join Assistant Secretary of Energy, Dennis Spurgeon on this panel, we look forward to working with him to achieve the objectives of GNEP.

AREVA, Inc. is an American Corporation, headquartered in Maryland. We are part of a global family of AREVA companies, and we are the only company in the world to operate in all aspects of the nuclear fuel cycle. Relevant to today's testimony is the fact that AREVA operates today, the largest and most successful used fuel treatment and recycling plants in the world. AREVA has proven expertise in the areas GNEP is designed to address. We have today commercially available technology that can be implemented in the very near future and AREVA is ready to commit its substantial resources to support the objectives of GNEP.

We believe that no time should be wasted since developing a comprehensive used fuel management will have the most important effect of increasing confidence in nuclear energy, thereby paving the way to the nuclear renaissance that Congress enabled with passage of Energy Policy Act of 2005.

Now one of the major obstacles to implementing a used fuel management strategy that includes recycling in the United States has been the perceived high cost of recycling compared to a once-through approach. However, several factors recently have led to questions about the appropriateness of the once-through fuel cycle. In particular, cost estimates in national repository to support the once-through policy have significantly increased. Additionally, more repository capacity is likely to be needed for fuel discharged after 2015. And finally, with the long-term increase in new U.S. nuclear power generation, now foreseen, even greater volumes of used nuclear fuel will need to be disposed.

These developments have made it increasingly important that the United States further investigate recycling as part of a comprehensive used fuel management strategy, which must also include geologic repositories. In this context, The Boston Consulting Group recently completed an independent study for AREVA to review the economics of a fuel cycle which includes developing a recycling component in the United States, using a technology consistent with America's nonproliferation objectives. The study addressed the costs of a portfolio waste management strategy. A new recycling fa-

cility was assumed to be operational by 2020. The facility would integrate used fuel treatment together with fuel fabrication on a single location and would function in combination with the development of the geologic repository.

The facility would utilize an AREVA recycling process called COEX, which unlike conventional technologies, never separates out pure plutonium. BCG's analysis conclusions found that the costs derived from an integrated plant, can be significantly lower than previously published findings suggest. Previous estimates of the cost of treatment and recycling have been based on very sparse publicly available industry data. They did not consider the effects of building only specific facilities needed or the economies of scale, higher rates of utilization, and they also used different assumptions with regard to financial calculations. They did not account for the full repository optimization potential that recycling strategy offers and this is a very important advantage of doing recycling.

Initial repository with today's statutory capacity, for instance, can ultimately handle the equivalent of four times more used fuel when operated as part of the portfolio strategy because efficient modes of recycling significantly compact the final waste volumes and minimize the heat and toxicity of disposed materials. These are, in fact, some of the goals and objectives just outlined by Assistant Secretary Spurgeon.

The Boston Consulting Group study, which assumed very conservative variables, concluded that the total cost of recycling in combination with an optimized repository can be comparable to the cost of a once-through program. By comparable, they meant within perhaps plus or minus 10 percent. Additionally, recycling is part of a portfolio strategy, presents a number of other significant benefits. For example, foregoing the need for additional civilian repository capacity until at least 2070. Eliminating earlier the need for additional investments in interim storage capacity at our operating reactor sites. And by relying on existing strategy providing a systematic progressive operational transition to the more advanced technology developments that are the ultimate objective of the GNEP initiative.

We believe the GNEP can be a successful public/private enterprise. DOE has recently engaged industry in the future development of the GNEP initiative, formulating the two-track approach and requesting from industry expressions of interest as just described. Based on AREVA's own experience, we believe that such an industrial and evolutionary approach offers the highest probability of success for introducing used fuel recycling in the United States.

AREVA responded positively and with great enthusiasm to both DOE requests for expressions of interest. With adequate public/private coordination, we forecast that a workable business framework can be achieved that will draw less heavily from the American taxpayer than is widely predicted while simultaneously leveraging significant investment interest from interested companies, such as AREVA. Industry can begin meeting the objectives of GNEP today. AREVA looks forward to the accelerated execution of a GNEP two-track approach.

We believe there are three compelling policy reasons for immediate action. We want a strategy that provides full confidence that the by-products resulting from the generation of nuclear power can be adequately dealt with for generations to come. This will help to ensure that new nuclear power plants can begin being built immediately. Beginning implementation of recycling in the near term will postpone or eliminate the need for siting, funding, and constructing additional geologic repositories. And finally, used fuel can be moved away from today's power plants early to the process storage part of the recycling facility perhaps as early as 2015, thus minimizing further Federal liabilities that, approved, would compensate utilities for interim storage.

As an industrial and commercial company, AREVA believes in an evolutionary approach to technology development. We have used this approach successfully on several occasions during the deployment of our treatment plants at La Hague. Making such provisions in the initial facility designs provides a high degree of flexibility for addition of advanced technologies when they become available. AREVA is also working on innovative business models that would require very limited direct government financial support over the next decade, thus allowing resources to be spent on the development of a final waste repository and on the R&D needed for advanced transmutation fuels. Our proposed evolutionary approach meets the fundamental objectives of GNEP to reduce proliferation risks through the combination of advanced safeguards techniques and technology developments.

First of all, avoid any separation of pure plutonium at any location within the treatment facility. This is one of the advantages of the COEX process which we are developing. We can limit the concentration of plutonium solution throughout the facility to keep the physical protection requirements of that facility to a minimum. And there are other features that we would design into the plan for advanced measurement techniques and defense in depth which are part of the ongoing nuclear industry.

Advanced burner development is also an important component of the GNEP initiative. As currently envisioned by DOE, this development would keep pace with the operational start of an integrated evolutionary recycling plant. However, focusing any national recycling strategy solely in conjunction with the ABR deployment carries a serious programmatic risk, because a full fleet of ABR reactors will likely not be available on the same time schedule that the recycling plant can be up and operational. Even if the technology program for ABR development is accelerated, and we hope that it will be, utilities will still require as many as 10 years of proven operational experience before considering serious private financing and commercial deployment.

Thus, a more successful recycling strategy should allow for the fabrication of both ABR fuel and fuel for today's fleet of light water reactors. The latter could be used in the interim as the ABRs come online improving the overall economics of the GNEP initiative. AREVA has recommended a DOE approach here that can demonstrate economic viability in the shortest frame work.

In conclusion, Mr. Chairman, AREVA believes that recycling as a complementary strategy to development of a geologic repository

can be done economically and that is the best comprehensive waste management strategy for dealing with used nuclear fuel. AREVA is interested in being a partner with the Department of Energy and thereby helping to put the partnership into GNEP. We stand ready to support the Department of Energy and this subcommittee and the nuclear energy in general in this historic initiative.

PREPARED STATEMENT

Mr. Chairman, members of the subcommittee, I thank you, I appreciate the opportunity to make this statement and I will be pleased to answer questions later this morning. Thank you.

[The statement follows:]

PREPARED STATEMENT OF DR. ALAN HANSON

Mr. Chairman and members of the subcommittee, my name is Alan Hanson, and I am Executive Vice President, Technology and Used Fuel Management, of AREVA NC Inc.

I appreciate this opportunity to testify before you today on the U.S. Department of Energy's Global Nuclear Energy Partnership (GNEP).

I am very pleased to join Assistant Secretary of Energy Dennis Spurgeon on this panel. Assistant Secretary Spurgeon comes to DOE with a distinguished industry background, which will help him to take on many challenges implementing our Nation's nuclear energy policy. I look forward to working with him to achieve the objectives of GNEP.

AREVA, Inc. is an American corporation headquartered in Maryland with 5,000 employees in 40 locations across 20 U.S. States. Last year, our U.S. operations generated revenues of $1.8 billion—9 percent of which was derived from U.S. exports. We are part of a global family of AREVA companies with 59,000 employees worldwide offering proven energy solutions for emissions-free power generation and electricity transmission and distribution. We are proud to be the leading supplier of products and services to the worldwide nuclear industry, and we are the only company in the world to operate in all aspects of the nuclear fuel cycle.

AREVA designs, engineers and builds the newest generation of commercial nuclear plants and provides reactor services, replacement components and fuel to the world's nuclear utilities. We offer our expertise to help meet America's environmental management needs and have been a longtime partner with DOE on numerous important projects. Relevant to today's testimony is the fact that AREVA operates the largest and most successful used fuel treatment and recycling plants in the world.

What I hope to accomplish today is to provide a commercial, industrial perspective on how we as a Nation might realistically achieve the bold objectives of the GNEP program. AREVA applauds the GNEP vision for expanding clean nuclear power to meet the ever-increasing global demand for energy while providing the framework to safeguard nuclear technologies and materials. We strongly believe that nuclear energy has a critical role to play in the future of our Nation, just as we believe that GNEP puts the United States on the right track for leadership in the global nuclear industry.

AREVA has proven expertise in the areas GNEP is designed to address. Our accumulated experience makes us uniquely qualified in all of the industrial aspects of this initiative. We have today commercially-available technology that can be implemented in the very near future, and AREVA is ready to commit its substantial resources to technically support the objectives of GNEP.

We believe that no time should be wasted since developing a comprehensive used fuel management strategy, one that is complementary and beneficial to our Nation's repository program, will have the most important effect of increasing confidence in nuclear energy, thereby paving the way to the nuclear renaissance that Congress enabled with passage of the Energy Policy Act of 2005.

THE COMPARABLE COSTS OF RECYCLING

One of the major obstacles to implementing a used fuel management strategy that includes recycling in the United States has been the perceived high cost of recycling compared to a once-through approach in which used fuel is stored for a period of time and then disposed in a geologic repository.

Over the last decade, however, several factors have led to questions about the appropriateness of the once-through fuel cycle as an exclusive used fuel management strategy. In particular, cost estimates of the national repository to support the once-through policy have significantly increased from initial estimates. Additionally, at the current rate of used fuel generation, additional repository capacity is likely to be needed for fuel discharged after 2015. And finally, with a long-term increase in new U.S. nuclear power generation now foreseen, even greater volumes of used nuclear fuel will need to be disposed.

The underlying economics of a used fuel management approach that includes recycling have thereby shifted, driven also in part by higher uranium prices and by a deeper understanding of the long-term behavior of recycling byproducts that allows for significant optimization of valuable repository space.

Recycling as a key component of a comprehensive used fuel policy has gained recognition through the demonstrated, long-term operational effectiveness of treatment and fabrication technologies for more than 40 years of accumulated industrial experience combined with a higher level of confidence based upon economic data from actual operations such as AREVA's. These developments have made it increasingly important that the United States further investigate recycling as part of a comprehensive used fuel management strategy.

In this context, The Boston Consulting Group (BCG) recently completed an independent study commissioned by AREVA to review the economics of the back-end of the nuclear fuel cycle and, in particular, a fuel cycle which includes developing a recycling component in the United States using a technology consistent with America's nonproliferation objectives.

The study addressed the cost of a "portfolio" waste management strategy. A new recycling facility treating 2,500 metric tons of used fuel per year was assumed to be operational by 2020. The facility would integrate used fuel treatment together with fuel fabrication on a single location and would function in combination with the development of a deep geologic repository for high-level waste from recycling and untreated legacy used fuel. The facility would utilize an AREVA recycling process called COEX™, which unlike conventional technologies never separates out pure plutonium.

Data from AREVA's global operations, supplemented by site visits and additional analyses, were used by The Boston Consulting Group as a starting point for an independent, third-party assessment of this assumed recycling model. BCG's analysis and conclusions found that the unit costs derived from an integrated plant are significantly lower than previously published findings suggest.

While the capital investments and operational expenses of a U.S. treatment plant may have been expected to be close to those of AREVA reference facilities, a much higher-used fuel throughput can be reasonably projected in an American context because of the U.S. facility's larger size and a higher rate of utilization, which in turn results in economical unit costs. Utilization was assumed to be at about 80 percent of nameplate capacity, a technical assumption that can be backed by AREVA's own operational experience. Higher utilization in the United States is not only possible but desirable because of a larger volume of newly discharged fuel and existing inventory.

Previous estimates of the cost of treatment and recycling have been based upon sparse publicly-available industry data. These estimates did not consider the effects of building only the specific facilities needed or the economies of scale and higher rates of utilization, and they also used different assumptions for financial calculations. Additionally, previous studies did not account for the full repository optimization potential a recycling strategy offers. A national repository with today's statutory capacity, for instance, can ultimately handle four times more used fuel when operated as part of a portfolio program because efficient modes of recycling can significantly compact final waste volumes and minimize the heat and toxicity of disposed materials.

The Boston Consulting Group study, which assumed very conservative variables such as the price of uranium at $31 per pound and the sum cost of a national repository at 2001 DOE estimates, concluded that the total cost of recycling used fuel in combination with an optimized repository can be comparable to the cost of a once-through program.

THE NATIONAL BENEFITS OF RECYCLING

Additionally, recycling as part of a portfolio strategy was found in the BCG study to present a number of significant national benefits. Some of those discussed in the report include:

—Forgoing the need for additional civilian repository capacity, beyond the initial 63,000-metric-ton capacity of the first repository, until at least 2070.
—Contributing to early reduction of used fuel inventories at reactor sites; in particular, removing newer, hotter fuel for recycling within 4 years of discharge, thus eliminating earlier the need for additional investments in interim storage capacity.
—Relying on existing technology with appropriate modifications that can in turn provide a systematic, progressive operational transition to more advanced technology developments as they become available.

GNEP CAN BE A SUCCESSFUL PUBLIC-PRIVATE ENTERPRISE

DOE has recently engaged industry in the future development of the GNEP initiative, formulating a two-track approach under the direction of Assistant Secretary Spurgeon and requesting from industry Expressions of Interest in a Consolidated Fuel Treatment Center (CFTC) and an Advanced Burner Reactor (ABR). In so doing, "DOE seeks to determine the feasibility of accelerating the development and deployment of advanced recycling technologies that would enable commercial scale demonstrations that meet GNEP objectives."

Based on AREVA's own experience, we believe such an industrial and evolutionary approach, while factoring for the application of incremental innovations, offers the highest probability of success for introducing used fuel recycling in the United States.

In parallel, an extensive R&D program utilizing the wonderful capabilities of our national laboratories should continue to be funded to further develop advanced separations and reactor technologies.

Together with a team of other U.S. industry leaders, AREVA responded positively and with great enthusiasm to both DOE requests for Expressions of Interest. I have no doubt that other capable nuclear companies have also made known to DOE their desire to participate in the GNEP initiative. With adequate public-private coordination, we forecast that a workable business framework can be achieved that will draw less heavily from the American taxpayer than is widely predicted while simultaneously leveraging significant investment interest from interested companies such as AREVA.

INDUSTRY CAN BEGIN MEETING THE OBJECTIVES OF GNEP

AREVA looks forward to the accelerated execution of a GNEP two-track approach. We believe there are three compelling policy reasons for immediate action:
—*Need for a comprehensive and effective waste management strategy*.—We want a strategy that provides full confidence that the byproducts resulting from the generation of nuclear power can be adequately dealt with for generations to come. This will help to ensure that the nuclear renaissance can move forward and that new U.S. power plants can begin being built immediately.
—*Optimization of a national repository*.—Today, the first national repository is limited by statute to a maximum capacity of 63,000 metric tons of civilian used nuclear fuel. The total volume of used fuel to be generated in the United States by the year 2100 is expected to exceed the statutory capacity significantly, especially under the scenario where there is a nuclear renaissance and new U.S. plants. Beginning implementation of recycling in the near-term, however, will postpone or eliminate the need for siting, funding and constructing additional geologic repositories.
—*Ending of interim storage charges*.—Used fuel should be moved away from the reactors as soon as possible. Acting on the two-track framework described above, used fuel could be moved away from today's power plants to a recycling facility perhaps as early as 2015, thus forgoing Federal liabilities that would otherwise be accrued to compensate utilities for interim storage.

As an industrial and commercial company, AREVA believes in an evolutionary approach to technology development. It begins by first applying a solid baseline of state-of-the-art, proven technologies, and then, but only then, integrating improvements and upgrades of more advanced, innovative technologies within a disciplined, continuous improvement process. Using this approach, we wish to continue to apply industry advancements to the GNEP program as it advances in the years ahead.

AREVA has successfully adopted and used this strategy on several occasions during the deployment of its treatment facilities at La Hague. The inclusion of additional hot cells in the initial footprint of the CFTC, which are intended to be used at a later date to receive new technology, is an example of this approach. Making such provisions in the initial design provides a high degree of flexibility.

AREVA is also working on innovative business models that would stimulate and effectively leverage private investments. We are exploring business model options that require very limited direct government financial support over the next decade, thus allowing resources to be spent on the development of a final waste repository and on R&D for advanced transmutation fuel technologies, which are crucial to the overall long-term success of the GNEP initiative. We are looking forward to entering into discussions with DOE in the weeks to come.

Our proposed evolutionary approach meets the fundamental objective of GNEP to reduce proliferation risk through the combination of advanced safeguard techniques and technology improvements. Our phased approach will carefully ensure from Day One that the attractiveness levels of process materials are kept as low as possible by:

—Avoiding any separation of pure plutonium at any location within the treatment and recycling facility (which is ensured with the AREVA COEX™ process).

—Limiting the concentration of plutonium in solution anywhere in the process facility consistent with attractiveness level D or below, thus making the recycling plant a Category II facility with respect to materials control and accountability classification.

—Implementing advanced nuclear material measurement to enhance the accuracy of material accountability and reporting time; a development program will be undertaken with the relevant DOE national laboratories most specialized in this area, and advanced safeguards will be integrated into the facility design from the start.

—Implementing the defense-in-depth principle, which involves multiple levels of physical barriers between nuclear materials and the exposed environment.

Advanced burner reactor development, also an important component of the GNEP initiative, is currently envisioned by DOE to keep apace with the operational start of an integrated recycling facility so it can address the actinide byproducts of evolutionary recycling.

However, an emerging industry consensus cautions that focusing any national recycling strategy solely in conjunction with ABR deployment carries a serious programmatic risk because a full ABR fleet likely will not be available until some years after a recycling plant is fully operational. Even if the technology program for ABR development is accelerated, utilities will require as many as 10 years of proven operational experience before considering private financing and commercial deployment.

Thus, a more successful recycling strategy should allow for the fabrication of both ABR fuel and fuel for today's fleet of light water reactors. The latter could be used in the interim as ABRs come on-line, improving the overall economies of the GNEP initiative.

AREVA, with more than 4 decades of sodium-cooled fast reactor expertise, is uniquely positioned to support the commercialization of ABRs in the United States under the framework of the GNEP initiative. AREVA has recommended to DOE an approach that can demonstrate economic viability in the shortest practicable timeframe.

AREVA believes that GNEP has the potential to vault the United States into a position of leadership in the global nuclear industry. We welcome the two-track approach recently announced by DOE and are eager to move forward with it.

AREVA believes that recycling, as a complementary strategy to the development of a geologic repository, can be done economically and that this is the best comprehensive waste management strategy for dealing with used nuclear fuel.

AREVA is interested in being a partner with DOE and thereby helping to put the "Partnership" into GNEP. We stand ready to support DOE and the nuclear energy industry in this historic initiative.

Mr. Chairman and members of the subcommittee, I appreciate having this opportunity to join you today. I would be pleased to answer any questions you may have at this time.

LETTER FROM DR. ALAN HANSON

Mr. MATTHEW BUNN,
Harvard University, John F. Kennedy School of Government, Cambridge, MA.

DEAR MR. BUNN: I wish to follow up on conversations we had over the past few months and, in particular, on the testimony you provided at the Energy and Water Appropriations Subcommittee, U.S. Senate, on September 14, 2006. I would like to take this opportunity to provide an initial response to some of the points you raised regarding the BCG study, which was commissioned by AREVA.

In the enclosure to this letter, I made an attempt to respond to the key points you raised, with the purpose and the expectation that these responses not be a final answer to your concerns, but a point of departure for future constructive discussions.

We, at AREVA, certainly share your point of view that using different assumptions could lead to different recycling costs. At the same time, you will probably agree that, in the context of a comparison between recycling and once-through strategies, adjustments to those assumptions can often result in similar cost increases for both strategies. The unfortunate truth is that the cost of a used fuel repository is speculative at best since one has yet to be built anywhere in the world.

I appreciate your interest and continued willingness to engage in a dialogue, and I am looking forward to the opportunity of discussing this further.

Sincerely,

ALAN HANSON, PH.D.,
Executive Vice President, Technology and Used Fuel Management.

ENCLOSURE.—RESPONSES TO COMMENTS MADE WITH REGARDS TO THE BCG STUDY

Note that the responses provided in this document have been developed by AREVA and have not been reviewed by BCG personnel.

1. PROJECTED COSTS LOWER THAN HISTORICAL COSTS

BCG assumes a unit cost of BOTH reprocessing and MOX fabrication of $630/kgHM (undiscounted), far lower than current plants have managed to achieve for either process. (BCG provides, for example, an interesting chart showing that their estimate for reprocessing cost per kilogram is roughly one-third the cost actually achieved in France). As they put it themselves, one of the "key differentiating elements" between their study and other studies is "integrated plant costs significantly lower than previously published data."

BCG does not "assume" a unit cost. The cost for reprocessing and MOX fabrication was built up from data provided by AREVA. Figure 17 of the report is a graphical representation of the difference between their projections and historical information.

The figure on page 17 does not represent what AREVA has "managed to achieve"—it is rather an overall unit cost analysis based on historical costs of construction and operations and current throughput. Even with the current plant at La Hague, if AREVA could increase the throughput of the plant with new contracted work, the cost of reprocessing would already be significantly lower than historical numbers shown in this figure.

2. MOX PLANT AT SAVANNAH RIVER EXPERIENCING COST OVERRUNS

The current effort to use AREVA technology and plant designs in the United States—the construction of a MOX plant at Savannah River—is leading to unit costs several times HIGHER than those achieved in France. This experience is not mentioned in the BCG report, and no argument is offered to why the proposed facility will have a cost result that is the opposite of the real experience.

The MFFF plant at Savannah River was conceived as a non-proliferation governmental project, the economics of which cannot be compared with a commercial fuel recycling project. It is designed for limited throughput of excess weapons-grade plutonium, as part of weapons disposal. The MFFF plant will process in its projected lifetime about as much Plutonium as the plant described in the BCG study will process over the course of just 1 year. Nevertheless, the MFFF plant will have to incur significant construction costs, not to mention the costs for more complex material handling requirements.

In addition, recent increases in the cost estimates for the MFFF plant at Savannah River, were, as much as possible, already factored into the design evaluated in the BCG study. At a high level, three drivers of higher cost can be identified and addressed:

—*Change in program and scope of work*.—The potential for cost overruns due to program and scope of work changes has been considerably reduced in the BCG study by accounting as thoroughly as possible for all aspects linked with the U.S. recycling plant.

—*Schedule slippage*.—The "political" schedule slippage cost overrun (caused by parallelism requirements with the Russian program) is not applicable to a U.S. recycling plant.

—*Unforeseen contingencies*.—These have been accounted for as much as possible in the BCG study by:

—Using as a basis the real costs incurred for the construction of the reference AREVA facilities (La Hague and Melox), including therefore all the historical contingencies.

—Adding $2 billion for costs of adaptation to the U.S. context (e.g., regulatory, more stringent design requirements, etc.) and another ~$2 billion for additional contingencies, representing approximately 25 percent U.S. recycling plant capital costs.

In general, we recognize that, even considering all contingencies and reasons for cost overruns, a large and long project, such as the construction of a recycling plant, is not immune to additional cost escalation, and we cannot claim that, without any shadow of doubt, the cost of the recycling plant will be under $16.2 billion. However, it has to be kept in mind that similar conclusions must be drawn for any alternative scenario.

3. LARGE PLANT IN THE UNITED STATES WITH SIGNIFICANT ECONOMIES OF SCALE

BCG envisions a reprocessing and MOX fabrication plant far larger than any other such plant that exists in the world, processing 2,500 tons of spent fuel every year (compared to 800 tons per year in the largest single plants that have been built to date).

The very large quantities of used fuel in the United States warrant the construction of a large plant. Neither BCG nor AREVA identified any major technical issue with a plant of this size.

BCG assumes that plant capacity can be scaled up dramatically with only a minor increase in capital or operating cost. They note that the capital cost of the existing French facilities was $17.8 billion (in 2005 dollars), but they assume that the capacity can be increased by more than 50 percent (assuming, generously, that the two La Hague plants should be considered to have a combined capacity of 1,600 tons of heavy metal per year) with an additional capital cost of only $1.5 billion, less than 10 percent of the original capital cost.

First, it is important to point out that the cost estimates were developed in a bottom-up fashion, i.e. a new U.S. plant was priced from the ground up. The chart you refer to is an attempt to reconcile costs incurred in the European plant with costs of a new plant, with obvious approximation and adjustments. For example, while we can estimate the cost of a new optimized vitrification process with a large capacity, it is difficult to pin down exactly how much of the new estimate is due to a larger capacity vs. an improved process.

Secondly, 2,500 tons/year represents a treatment throughput that actually is not far from the throughput of the plant at La Hague. The treatment capacity at La Hague is the combination of two operating treatment plants (UP3 and UP2–800), both with a "nominal" throughput of 800 tons/year, and which were combined in 2001 to perform as one single operating entity. Each of these units has a technical throughput capacity closer to 1,000 tons/year. Indeed, the licensing permits of La Hague reference a maximum throughput of 1,000 tons/year per unit, and a combined maximum throughput of 1,700 tons/year. Note that La Hague sustained throughput close to 1,700 tons/years during several years in the late 1990's, when contracted work allowed it.

Therefore, with the real capacity of La Hague close to 2,000 tHM/yr, the projected U.S. plant is only 25 percent larger. Also, consider that the increase in cost is $1.5 billion, but on a $12.6 billion basis (see figure 8 on page 16 in the BCG study), this is a 12 percent increase. Therefore, we are talking about a 12 percent increase in cost for a 25 percent increase in capacity (or, in BCG terms, a 70 percent BCG scale factor), which is in line with typical values one would expect from projects like this,[1]

[1] From BCG's "Perspectives on Strategy", 1998. There is a formula which is known to approximate scale effect in the process industries. "Capital cost increases by the six-tenths power of the increase in capacity." This exponential change is equivalent to an increase of 52 percent in capital cost to provide a 100 percent increase in capacity. The total capital cost became 152 percent instead of 100. The total output became 200 instead of 100. The average became 152/200=76 percent of 100 percent. That is a very common and typical experience curve cost decline rate. Average production unit size normally increases in proportion to rate of total output or even faster. If it does, then capital cost should go down as fast or even faster than in proportion to a 76 percent experience curve. Since capital tends to displace labor over time, then this scale effect becomes increasingly important with growth in volume and experience. There are limits on scale due to load factors and logistics provided there is a finite total market. But if the total market grows, then scale can be expected to grow too. Scale effect applies to all operations, not just process plants. Marketing, accounting and all the overhead functions have scale effects also. Scale effect alone is sufficient to approximate the experience curve effect where growth is constant and scale grows with volume. For most products, a 70–80 percent slope is normal, with

Continued

considering that a large percentage of the costs during the construction phase of a project like this are independent of the capacity of the plant (e.g. licensing costs, siting, design and technology development, etc.).

4. NO TECHNICAL PROBLEMS, JUST-IN-TIME USE OF RECYCLED FUEL

BCG assumes that the plant will always operate at full capacity with no technical problems, no contract delays, etc. No reprocessing plant or MOX plant in the world has ever done so.

The throughput of 2,500 tHM is based on 300 days of operations, thus allowing for 60 days of annual plant shut-down, which is consistent with operating experience at both La Hague and MELOX.

In addition, in the United States, the large backlog of fuel, in conjunction with significant quantities of used fuel generated each year (>2,000 tons) will contribute to guaranteeing an adequate feed to the plant.

Once again, we recognize that, even considering previous experience and the specific U.S. situation, we cannot claim that, without any shadow of doubt, the plant will be operated at 2,500 tHM/yr for 50 years. However, similar issues will be encountered by any alternative scenario.

BCG assumes that there will never be a lag in fuel fabrication, since, to save money, they cut out all funding for having a plutonium storage area. In France, by contrast, tens of tons of plutonium have built up in storage as a result of lags in the use of this plutonium as fuel.

Having contracts in place for recycled fuel with utilities and being able to implement a just-in-time system is important for the economic viability of the plant and for non-proliferation and/or physical protection issues. Even though just-in-time recycling is envisioned as part of the strategy, the cost for a small buffer storage facility where Pu/U in liquid form can be stored for a limited amount of time was included in the plant. The plutonium storage area was not cut out to save money but rather because it was believed to be unnecessary and, therefore, undesirable.

5. DENSIFICATION FACTOR TRANSLATING INTO COST SAVINGS

BCG also makes dubious assumptions about the disposal and management costs of different types of nuclear waste. They argue that because of the lower long-term heat generation from reprocessing waste, compared to spent fuel, four times as much reprocessing waste could be placed in each unit area of the repository, and therefore they assume that total per-kilogram disposal costs would be only one-quarter as large. As we noted in our 2003 study, however, only a portion of total disposal costs are likely to be driven by heat and repository capacity; with a four-fold repository expansion, a two-fold reduction in cost per kilogram is more appropriate.

Based on initial analyses, we believe that a repository built for high-level waste from recycling (HLW–R) is likely to cost less than a repository for used fuel; thus the unit cost of the repository decreases at least proportionally to the densification factor (same cost divided by larger quantity).

In your 2003 study, you mention how repository emplacement operations and monitoring, waste package fabrication, and transportation costs are related to volume, mass, or number of items. That implies that, since, in the case of HLW–R, a larger volume of waste and a higher number of waste items are emplaced in the same repository area, a four-fold repository capacity expansion does not translate into a full four-fold unit cost reduction.

However, we believe that several of those costs are to a large extent fixed, i.e. those costs would not change whether the repository is built for used fuel or high-level waste from recycling (HLW–R): for example, in the case of transportation costs, the construction of the Nevada railroad will cost the same whether it is built for HLW–R or used fuel, thus shipping four times as much fuel to the repository will result in a fourfold reduction in railroad construction "unit" costs. Similar considerations can be made for large portion of the emplacement operations costs, which can be considered fixed.

We agree that some costs are indeed variable (for example, waste package material costs, or, in the same case of the Nevada railroad, some of the operations costs) and will decrease less than four-fold in unit cost terms in the case of a HLW–R repository. However, those costs are not very large and are more than off-set by other additional reductions that would occur in the case of a HLW–R repository (e.g. no

---

the steeper slope for those where the maximum value is added and where shared experience with slower growth areas is least. However, it is probable that few products decline in cost as fast as they could if optimized. It is a known fact that costs are more certain to decline if it is generally expected that they should and will.

need to build wet lines in the surface facility, no need to use dripshields for glass logs, etc.).

Finally, the additional cost for disposal of ILW and LLW, which you refer to in your 2003 study and which amounts to an additional 20 percent of the repository costs for HLW–R, was taken into account in the BCG study as part of the recycling costs. Also, in the BCG study, it was conservatively assumed that compacted waste from hulls and end-fittings would be disposed of in the repository—releasing this constraint would result in higher densification factors and additional economic benefits that would lower the HLW–R repository costs further.

In summary, to effectively conclude whether the cost of a HLW–R repository is the same or less than one for a used fuel repository, it would be necessary to perform some significant re-design, which goes beyond the scope of the BCG study. Yet, based on initial analyses, we believe that a HLW–R repository is likely to cost the same, or less, than a used fuel repository; thus the unit cost of the repository decreases proportionally to the densification factor (same cost divided by larger quantity).

6. COST OF DEALING WITH USED MOX SAME AS LEU FUEL

At the same time as they take a four-fold cost reduction for the lower heat generation from reprocessing wastes, they assume that the management cost for spent MOX fuel would be the same as for spent LEU fuel, despite the far higher heat generation of spent MOX fuel, the greater difficulty in reprocessing it, and the much more radioactive nature of the fuel that would be manufactured from it. They acknowledge that disposing of the MOX spent fuel in the repository would effectively eliminate the repository benefit of the entire effort, because of the very high heat generation of the MOX; managing the spent MOX would require fast reactors and other technologies not included in their study.

This issue is addressed in the BCG study. In particular, Appendix A10, pages 75–78, offers a detailed discussion of this issue.

Moreover, based on operational experience at La Hague, we do not believe that reprocessing spent MOX fuel is technically any more difficult than reprocessing spent UOX fuel. At AREVA, we have already successfully treated several tons of used MOX.

7. HIGH FINANCING COSTS UNDER PRIVATE MODEL

BCG also assumes that the plants they envision will be financed entirely by the Government, at a 3 percent real rate of return. This assumption is crucial to their conclusions, as the costs of such a capital-intensive facility would increase dramatically if a higher (and more realistic) rate were chosen. As we noted in our 2003 study, if a reprocessing plant were built that had the same capital and operating costs and nameplate capacity as Britain's Thermal Oxide Reprocessing Plant (THORP), whose costs are generally similar to those of the French plants at La Hague, which are the basis for the BCG estimates, and the plant were financed at such a government rate, it would have a reprocessing cost in the range of $1,350 per kilogram of heavy metal in spent fuel (kgHM), if it successfully operated at its full nameplate capacity throughout its life with no interruptions (a far cry from the real experience, but the same assumption used in the BCG study). (By contrast, as already noted, BCG assumes $630/kgHM for both reprocessing and MOX fabrication combined.) But if the exact same plant were financed privately, at the rates EPRI recommends assuming for power plants owned by regulated utilities with a guaranteed rate of return (and therefore very low risk), the unit cost would be over $2,000/kgHM. If financed by a fully private entity with no guaranteed rate of return, the cost for the same facility would be over $3,100/kgHM. (That is without taking into account the large risk premium the capital markets would surely demand for a facility whose fate was so dependent on political decisions; all three of the commercial reprocessing plants built to date in the United States failed for such reasons.)

Not having any information on what financing scheme would be used to build a recycling plant in the United States, BCG assumed a 3 percent Government rate to be consistent with the estimates on Yucca Mountain. This is also in line with the fact that today transport and disposal of used fuel is a government liability.

Business models were not discussed in the BCG study, which is purely an economic assessment. The real effect of a different cost of capital would depend very heavily on the specific of the business model: what kind of risks can be assumed? What level of private involvement do you have: 100 percent or less? What about transportation? etc. Without having resolved those issues, no assumptions can be made for the cost of a "private" plant.

The entire approach, in short, is only financially feasible if it is fully Government-financed. But for the Government to own and operate a facility that would not only reprocess spent fuel but manufacture new MOX fuel on the scale they envision—providing a significant fraction of all fuel for U.S. light-water reactors—would represent an immense Government intrusion on the private nuclear fuel industry. The implications of such an approach have not been examined. The coal industry and the gas industry would surely ask, "if nuclear can get facilities to handle its waste financed at a 3 percent Government rate, why can't we get the same thing for our environmental controls or carbon sequestration?"

We acknowledge that there will need to be further studies to develop a business model that can address competition issues on the use of recycled fuel, although we would like to point out that MOX would constitute only about 12 percent of the total U.S. fuel needs and, therefore, would not represent "an immense Government intrusion".

The full answer to this question goes beyond the scope of the BCG study, since taking the liability of the used nuclear fuel from the utilities, regardless of whether the used fuel is directly disposed of, or recycled, was a policy decision made by the Government many years ago. We are also not qualified to comment on the merits of U.S. Government policy decisions on waste treatment in other industries; however, we would note that your argument regarding Government financing of used fuel disposal is already relevant for the repository and obtaining Government rates for a treatment facility would not be new.

8. LEGAL DISCLAIMER

The BCG study itself appears to agree that it should not be used as the basis for policy-making. After acknowledging that the study was initiated and paid for by AREVA, and that BCG made no attempt to verify any of the data provided by AREVA, the study warns: "Any other party [than AREVA] using this report for any purpose, or relying on this report in any way, does so at their own risk. No representation of warranty, expressed or implied, is made in relation to the accuracy or completeness of the information presented herein or its suitability for any particular purpose".

AREVA asked BCG to provide an independent view of the economics of used fuel management in the United States, using data from AREVA operations as a starting point. It is understandable that BCG wanted to clarify that they are not in the business of influencing policy-making (BCG will not gain any benefit if the U.S. changes its policy on recycling) and they have not audited the data they were provided. In that respect, it is very common practice that a management consulting firm such as BCG does not take any liability over future uses of the report or for information provided by AREVA.

Most major institutions and corporations adopt a similar legal strategy to shield themselves from potential liabilities, including Harvard University. Such legal disclaimers should not be interpreted by the reader as a lack of faith in the material discussed or presented, or the veracity of statements made.

See for example: http://neurosurgery.mgh.harvard.edu/disclaim.htm; http://www.seo.harvard.edu/students/disclaimer.html; http://www.hcp.med.harvard.edu/statistics/survey-soft/disclaimer.html; http://www.health.harvard.edu/fhg/diswarr.shtml.

Senator DOMENICI. Thank you very much. You certainly provide us with bold testimony. Hope we will be as bold as you are in your projections and enthusiasm. Assistant Secretary Spurgeon, it's kind of contagious. I don't know which rubbed off which way, but you both have come to my office and you bring more enthusiasm about the possibility of United States Government considering a comprehensive solution to our spent fuel needs. Your enthusiasm about being able to achieve it is rather startling compared to what we have been hearing for so long. We might just get it right, let's hope.

Mr. Bunn, in all of your vast experience in this area, you've seen us proceed through and stumble and fail and start up again, but I think we are quite serious about moving ahead and we need good thinking and good recommendations and we are pleased that you are going to share some facts, some concerns with us. We welcome you.

STATEMENT OF MATTHEW BUNN, HARVARD UNIVERSITY, BELFER CENTER FOR SCIENCE AND INTERNATIONAL AFFAIRS, JOHN F. KENNEDY SCHOOL OF GOVERNMENT, CAMBRIDGE, MASSACHUSETTS

Mr. BUNN. Good. Mr. Chairman, it's an honor to be here today to talk to you about the Global Nuclear Energy Partnership. I would consider myself a friend of nuclear energy and I believe that we need to be working hard to fix the problems that have limited nuclear energy's growth because we may need it to cope with the problem of climate change and I support a strong nuclear research and development program and I support several of the key elements of GNEP. But I do have a little bit different view on recycling.

I think that gaining the public utility and government acceptance needed for a large scale expansion of nuclear energy around the world is going to require making nuclear power as cheap, as safe, as secure, and as proliferation-resistant as possible. And the current GNEP focus of moving rapidly toward near-term large-scale reprocessing of spent nuclear fuel is likely to take us in the wrong direction on each of those counts, and hence, is more likely to undermine the nuclear renaissance than to promote it. Moreover I believe that even without reprocessing we will be able to provide sufficient uranium supplies and sufficient repository space for many decades. Let me elaborate on these points and make several recommendations.

First, cost, reprocessing is going to be more expensive than direct disposal. In a recent Harvard study we concluded that reprocessing would increase the back end costs by roughly 80 percent, and a wide range of other studies—including government studies in both France and Japan—have reached similar conclusions. A National Academy of Sciences review of separations and transmutation concluded that the excess cost of recycling 62,000 tons of commercial spent fuel, "Is likely to be no less than $50 billion and could easily be over a $100 billion."

Now, that is a small amount in per kilowatt hour terms, but it's a large absolute number and there's only a few ways it could be financed. You could drastically increase the nuclear waste fee. You could provide billions of dollars in government subsidies over decades, or you could pass numerous regulations that would effectively force private industry to pay, to build and operate otherwise uneconomic facilities. All of those options would make investors, potential investors in new nuclear power plants more uncertain about making such investments rather than less.

The recent Boston Consulting Group study, is an interesting document, but it makes a number of overoptimistic assumptions. It estimates a cost of $630 per kilogram of heavy metal for both reprocessing and MOX fabrication combined, which is far less than the real French have ever achieved for either process. A more detailed critique of the BCG study is provided as an appendix to my testimony.

With respect to proliferation risks, those are also higher on the recycling path. The new U.S. message to developing countries is essentially: Reprocessing is essential to the future of nuclear energy, but we're going to keep that technology away from you. I don't

think that it's going to help achieve President Bush's goal of limiting the spread of reprocessing technology. If we move forward with UREX+, rather than PUREX, and that technology is spread around the world, that would be only modestly better, as a developing country with a UREX+ facility and the skilled personnel to operate it could readily adapt those things to producing pure plutonium.

It is very important to move forward with another GNEP element and that is giving states around the world reliable guarantees of fuel supply and spent fuel management services to convince them not to build their own enrichment and reprocessing plants. But U.S. reprocessing is not central to that vision, particularly, since I believe it is going to politically unrealistic to import large quantities of foreign power reactor fuel into the United States in any case.

The Bush administration has recognized that the large quantities of separated plutonium building up as a result of traditional PUREX process posed, "A growing proliferation risk that simply must be dealt with." We should be almost as worried about the stocks of mixed plutonium and uranium that would result from the COEX process that Dr. Hanson referred to. Nuclear weapons could be made directly from the roughly 50/50 plutonium uranium mix that COEX advocates refer to. Alternatively the plutonium could be separated in simple gloveboxes and commercially available equipment and chemicals. Any state or group able to accomplish the difficult job of making an implosion-type bomb from pure plutonium, would likely be able to accomplish this simpler job of separating this plutonium from uranium. The repeated references to no pure plutonium are a talking point, not a serious nonproliferation analysis.

Keeping the minor actinides and possibly some of the lanthanides with the plutonium as proposed in UREX+ and its variants would make the product more radioactive, but the radioactivity would still be far less than international standards for self protection. And the process still takes away the great mass of the uranium and the majority of the radiation from the fission products, making it far less proliferation-resistant than simply leaving the plutonium in the spent fuel.

With respect to safety and security, life cycle comparisons have not yet been done, but it seems clear that extensive chemical processing of intensely radioactive spent fuel presents more opportunities for release of radionuclide, either by accident or by sabotage than does leaving spent fuel untouched in thick metal or concrete casks.

With respect to environmental impacts, GNEP might reduce the long term doses from the repository if all its technical goals are achieved, but those doses are already low and the benefit of reducing them is therefore modest. With respect to the sustainability of nuclear energy, neither uranium nor repository space are likely to be in a short supply, as is often asserted. As we described in detail in our 2003 study, world resources of uranium likely to be recoverable at a cost far less than the cost of breeding are sufficient to fuel a growing nuclear economy for decades.

Indeed, in the last decade the Red Book estimates of world uranium resources have been increasing far faster than uranium has been consumed. Probably the most important argument in favor of recycling is repository space issue and the need to find a way to get the waste from a growing nuclear energy enterprise into Yucca Mountain. But the latest estimates from the Electric Power Research Institute indicate that Yucca Mountain repository can almost certainly hold over 260,000 tons of spent fuel, an amount that would not exist until well into the latter half of this century even with rapid nuclear growth. Then they will be able to hold 570,000 tons or more.

Moreover, it seems likely that gaining the public acceptance and licensing for huge reprocessing plants and scores of fast neutron reactors will be at least as difficult as licensing another repository, which might well just be the next ridge over at Yucca Mountain.

We do need a substantial nuclear R&D program, in fact we need to substantially increase R&D on a wide range of energy technologies. Unfortunately, I am concerned that DOE is distorting that program by rushing to build commercial scale facilities without having completed either the R&D on relevant technologies or the detailed system analysis needed to make wise choices. The CFTC envisioned in the request for expressions of interest would process as much as 2,000 to 3,000 tons of spent fuel per year, far larger than any comparable facility in the world, and they would also envision a commercial scale fast neutron reactor. I think the subcommittee should ask several questions about this approach.

First, wouldn't even the optimistic assumptions of the BCG report lead to an estimated cost for just these two facilities in the range of $20 billion? Second, wouldn't it be likely that the cost of these facilities would grow as the project proceeded, mirroring the experience with Hanford vitrification project or the Savannah River MOX plant? How does DOE propose to finance these costs? From the appropriations, from the nuclear waste fund? Is there any previous example in DOE's history in which the department has managed to build and operate a commercial scale facility of this complexity successfully? I believe they have a record unblemished by success in this area. What is DOE's past record of success and failure in picking winners among the possible technologies for commercial deployment? What life cycle analysis of costs, safety, security, proliferation resistance, led them to this conclusion?

Senator DOMENICI. Sir, your time is running out.

Mr. BUNN. Ok, let me jump ahead to some recommendations. I believe we should focus first on interim storage. Whatever option we pursue, we are going to need additional storage capacity and we're going to need at least some centralized interim storage capacity. I believe we need to take a deliberate voluntary approach to siting storage facilities. We laid out such an approach in a 2001 report.

Second, we should pursue a broad R&D program on spent fuel management that includes both improved approaches to direct disposal and improved approaches to recycling and let the best process win.

Third, we need to focus more on building broad political sustainability. These processes are going to take decades to implement and unless we have bipartisan support the chances of failure are high.

Fourth, we need to move forward expeditiously with the Yucca Mountain repository, but taking the time to get the analysis right and build as much support as we practically can.

Fifth, we need to develop and analyze first and build later. Today key separations and transmutation technologies are in their infancy and key system analyses of costs, safety, security, proliferation resistance have not yet been done. We should not be building large facilities before those efforts have been completed. Large scale reprocessing and transmutation facilities should not be built until detailed analysis indicate that they offer a combination of cost, safety, security, proliferation resistance, and sustainability superior to potential alternatives.

PREPARED STATEMENT

As a first step, I recommend that the committee accept the House idea calling for an in-depth peer review of the entire fuel recycling plan by the National Academies before moving forward to build expensive facilities.

Thanks for your attention. I apologize for going on so long, and I look forward to questions.

[The statement follows:]

PREPARED STATEMENT OF MATTHEW BUNN

ASSESSING THE BENEFITS, COSTS, AND RISKS OF NEAR-TERM REPROCESSING AND ALTERNATIVES

Mr. Chairman and members of the subcommittee, it is an honor to be here today to discuss the Global Nuclear Energy Partnership (GNEP).

I believe that we should be working hard to fix the past problems that have limited the growth of nuclear energy, as the world may need a greatly expanded global contribution from nuclear energy to cope with the problem of climate change. I support a strong nuclear research and development program—along with greatly expanded R&D on other energy sources and efficiency.

But gaining the public, utility, and government acceptance needed for a large-scale expansion of nuclear energy will not be easy. Such an expansion will require making nuclear power as cheap, safe, secure, and proliferation-resistant as possible. I believe that while several elements of GNEP deserve strong support, the current GNEP focus on moving rapidly toward large-scale reprocessing of spent nuclear fuel will take us in the wrong direction on each of these counts, and hence is likely to do more to undermine the future of nuclear energy than to promote it.[1] Moreover, I believe that reprocessing will not be required to provide either sufficient uranium supplies or sufficient repository space for many decades to come, if then. I fear that the new focus on rushing to construction of commercial-scale facilities is precisely the wrong direction, and will distort the R&D effort. I will elaborate on each of these points in this testimony.

But first, let me emphasize the two key take-away points:

—(1) We should focus first on safe, secure, and politically sustainable approaches to interim storage of spent fuel. These will be needed no matter what long-term options we choose for spent fuel management; if properly implemented, they will address the immediate needs of the nuclear industry and provide the confidence needed for construction of new reactors.

—(2) We should take the time needed to make sound and politically sustainable decisions about spent fuel management. There is no need to rush to judgment. Spent fuel can be stored safely and cheaply for decades in dry casks, leaving

[1] For a similar argument that the GNEP approach "threatens to set back the nuclear revival," see, for example, Richard Lester, "New Nukes," Issues in Science and Technology, Summer 2006, pp. 39–46.

all options open for the future, and allowing time for the economic, technical, and political issues on all paths to be more fully explored. From Clinch River to Wackersdorf, from Chernobyl to the Hanford tanks, the nuclear age is littered with the costly results of the rushed decisions of the past. Rushing to make decisions before the needed analyses and R&D are completed will leave us with programs that are more costly and less effective than they could otherwise be.

RECYCLING IN CONTEXT

Recycling is not an end in itself, whether for newspapers or for spent fuel. Rather, it is a way to conserve scarce resources and reduce disposal costs. If all the real costs and externalities are appropriately reflected in prices, and recycling costs more than direct disposal, that means that recycling is wasting more precious resources than it is conserving: the capital and labor invested in recycling, in that case, are more precious than the resources conserved by doing so. When old computers are discarded, the precious metals in them are often recycled, but the silicon in their chips is generally not: silicon is plentiful, recovering and recycling it would be expensive, and disposal of it is not a major problem. It is worth at least considering whether or not the same is true in the case of recycling spent nuclear fuel.

For spent fuel, neither recycling nor direct disposal should be supported as an article of faith. Rather, the choice should be made based on careful analyses of which options offer the best combination low cost, low proliferation risks, low environmental impact, high safety and security, and high sustainability for a growing long-term nuclear enterprise. Reprocessing using either traditional PUREX technology or the UREX+ co-extraction technologies being considered for GNEP is inferior to once-through approaches in most of these respects.

COSTS AND FINANCING

Reprocessing and recycling using either current commercial technologies or those proposed for GNEP would substantially increase the cost of spent fuel management. In a recent Harvard study, we concluded that reprocessing would increase spent fuel management costs by roughly 80 percent, compared to once-through approaches, even making a number of assumptions that were quite favorable to reprocessing.[2] A wide range of other studies, including government studies in both France and Japan, have reached similar conclusions.[3] The UREX+ technology now being pursued adds a number of complex separation steps to the traditional PUREX process, and would likely be even more expensive.[4] The capital cost of fast-neutron reactors such as those proposed for GNEP has traditionally been significantly higher than that of light-water reactors. A National Academy of Sciences review of separations and transmutation technologies such as those proposed for GNEP concluded that the additional cost of recycling compared to once through for 62,000 tons of commer-

[2] See Matthew Bunn, Steve Fetter, John P. Holdren, and Bob van der Zwaan, "The Economics of Reprocessing vs. Direct Disposal of Spent Nuclear Fuel" (Cambridge, MA: Project on Managing the Atom, Belfer Center for Science and International Affairs, John F. Kennedy School of Government, Harvard University, December 2003, available as of 16 July 2006 at http://bcsia.ksg.harvard.edu/BCSIA_content/documents/repro-report.pdf).

[3] For quite similar conclusions, see John Deutch and Ernest J. Moniz, co-chairs, "The Future of Nuclear Power: An Interdisciplinary MIT Study" (Cambridge, MA: Massachusetts Institute of Technology, 2003, available as of 16 July 2006 at http://web.mit.edu/nuclearpower/). For a study for the French government, see Jean-Michel Charpin, Benjamin Dessus, and René Pellat, "Economic Forecast Study of the Nuclear Power Option" (Paris, France: Office of the Prime Minister, July 2000, available as of 10 September 2006 at http://fire.pppl.gov/eu_fr_fission_plan.pdf), Appendix 1. In Japan, the official estimate is that reprocessing and recycling will cost more than $100 billion over the next several decades, and the utilities have successfully demanded that the government impose an additional charge on all electricity users to pay the extra costs.

[4] Other processes might someday reduce the costs, but this remains to be demonstrated, and a number of recent official studies have estimated costs for reprocessing and transmutation that are far higher than the costs of traditional reprocessing and recycling, not lower. See, for example, Organization for Economic Cooperation and Development, Nuclear Energy Agency, "Accelerator-Driven Systems (ADS) and Fast Reactors (FR) in Advanced Nuclear Fuel Cycles: A Comparative Study" (Paris, France: NEA, 2002, available as of 16 July 2006 at http://www.nea.fr/html/ndd/reports/2002/nea3109-ads.pdf), p. 211 and p. 216, and U.S. Department of Energy, Office of Nuclear Energy, "Generation IV Roadmap: Report of the Fuel Cycle Crosscut Group" (Washington, DC: DOE, 18 March 2001, available as of 16 July 2006 at http://www.ne.doe.gov/reports/GenIVRoadmapFCCG.pdf.), p. A2–6 and p. A2–8.

cial spent fuel "is likely to be no less than $50 billion and easily could be over $100 billion."[5]

While such a cost would be a modest addition to total per-kilowatt-hour costs of nuclear electricity generation, the absolute magnitude of the amount is large, and there are only a few ways it could be financed: either (1) the current 1 mill/kilowatt-hour nuclear waste fee would have to be substantially increased; (2) the Federal Government would have to provide tens of billions of dollars of subsidies over many decades (which might not be sustained), or (3) onerous regulations would have to be imposed that would effectively require private industry to build and operate uneconomic facilities. All of these options would make investors more uncertain, not less, about putting their money into new nuclear plants in the United States. Most approaches would represent dramatic government intrusions into the private nuclear fuel industry, whose implications have not been fully examined.

The recent study by the Boston Consulting Group (BCG), arguing that reprocessing would be no more expensive than once-through approaches, is grossly overoptimistic and should not be relied on as a basis for policy.[6] The BCG study uses a wide range of unjustified assumptions to reach an estimated price for both reprocessing and mixed oxide (MOX) fuel fabrication of $630 per kilogram of heavy metal, far less than real commercial plants have achieved for either process. Yet the real experience of adapting French plutonium technology in the United States, the project to build a MOX plant at Savannah River, is leading to costs several times higher than those achieved in France, not several times lower. A more detailed critique of the BCG study is provided as an appendix to this testimony.

PROLIFERATION RISKS

In addition to being more costly, the reprocessing proposed as a central part of GNEP would raise more proliferation risks than would reliance on once-through approaches.

President Bush, like every President for decades before him, has been seeking to limit the spread of enrichment and reprocessing technologies.[7] Since 1976, the U.S. message has been, in effect, "reprocessing is unnecessary; we, the country with the world's largest nuclear fleet, are not doing it, and you do not need to either." While it is often said that the rest of the world did not listen to us, no countries have built civilian reprocessing plants that were not already reprocessing or building such facilities as of 1976, three decades ago.[8] Now, with GNEP, the message is "reprocessing is essential to the future of nuclear energy, but we will keep the technology away from all but a few states."[9] This is not likely to be an acceptable and sustainable approach for the long haul. In particular, this message is likely to make it more difficult, not less, to convince states such as Taiwan and South Korea—both of which have had secret nuclear weapons programs based on reprocessing in the past, terminated under U.S. pressure—not to pursue reprocessing of their own. Having other countries pursue UREX+ rather than PUREX would be only a modest improvement, as once a country had a team of people with experience in chemically processing intensely radioactive spent nuclear fuel and a facility for doing so, this expertise and infrastructure could be adapted very rapidly to separate pure pluto-

[5] U.S. National Research Council, Committee on Separations Technology and Transmutation Systems, "Nuclear Wastes: Technologies For Separation and Transmutation" (Washington, DC: National Academy Press, 1996), p. 7. Note that these figures are expressed in 1992 dollars; in 2006 dollars, the range would be $66–$133 billion.

[6] Boston Consulting Group, "Economic Assessment of Used Nuclear Fuel Management in the United States" (Boston, Mass: BCG, July 2006, available as of 11 September 2006 at http://www.bcg.com/publications/files/2116202EconomicAssessmentReport24Jul0SR.pdf).

[7] President George W. Bush, "President Announces New Measures to Counter the Threat of WMD: Remarks by the President on Weapons of Mass Destruction Proliferation, Fort Lesley J. Mcnair—National Defense University" (Washington, D.C.: The White House, Office of the Press Secretary, 2004; available at http://www.whitehouse.gov/news/releases/2004/02/20040211__094.html as of 12 April 2005).

[8] The major commercial reprocessing facilities in the world are in France, the United Kingdom, Russia, and Japan. The first three already had reprocessing well underway in 1976, and the Japanese Tokai plant was well advanced at that time. China and India both have some reprocessing activities, but both had reprocessing technology already in 1976. North Korea has established a reprocessing plant since 1976, but it is entirely for military purposes, not a commercial plant that might be influenced by U.S. policy on commercial reprocessing. Since 1976, a number of countries that were previously pursuing reprocessing (such as Germany and Sweden, among others) have joined the United States in abandoning reprocessing in favor of direct disposal. In general, the poor economics of reprocessing have driven decisions more than U.S. policy.

[9] This formulation is adapted from Frank von Hippel, "GNEP and the U.S. Spent Fuel Problem," congressional staff briefing, 10 March 2006.

nium for weapons—much as countries with enrichment could readily switch from producing low-enriched uranium to producing highly enriched uranium (HEU) should they choose to do so.

GNEP advocates argue, to the contrary, that another central element of GNEP—the idea of a consortium of fuel cycle states that would provide guaranteed fuel supply and spent fuel management to other states, perhaps in a "fuel leasing" arrangement—would reduce the incentives for states to acquire reprocessing facilities (as well as enrichment facilities) of their own. This is an important and potentially powerful idea, which should be pursued.[10] Unfortunately, the way it has been presented, dividing the world forever into "fuel cycle states" that would be allowed to have these technologies and "recipient states" that would not, may be raising a danger of causing what we are trying to prevent. As I understand it, Argentina and South Africa, among others, have already suggested that they may restart their enrichment programs in part in order to be considered in the favored class of "fuel cycle states." The subcommittee may wish to inquire of DOE whether this is correct.

In any case, U.S. reprocessing is not an essential part of making such an offer. A U.S. offer to take in unlimited quantities of foreign spent nuclear fuel is simply not politically realistic—even if the spent fuel was to be reprocessed after it arrived. (Indeed, few steps would be more likely to destroy renewed public support for nuclear energy in the United States than proposing to make the United States "the world's nuclear dumping ground," as anti-nuclear activists have put it in the case of Russia.) Realistically, if major states are to make such a back-end offer, it will be others who do so—starting, perhaps, with Russia, which has already put in place legislation to make that possible. Russia currently plans to offer such fuel leases and to put imported spent fuel in secure dry storage for decades, though at present it does plan to reprocess it eventually.

A second set of proliferation issues focuses on possible theft or diversion of plutonium. While reactor-grade plutonium would not be the preferred material for making nuclear bombs, it does not require advanced technology to make a bomb from reactor-grade plutonium: any state or group that could make a bomb from weapon-grade plutonium could make a bomb from reactor-grade plutonium.[11] Despite the remarkable progress of safeguards and security technology over the last few decades, processing, fabricating, and transporting tons of weapons-usable separated plutonium every year—when even a few kilograms is enough for a bomb—inevitably raises greater risks than not doing so. Indeed, while many of the stocks of civil plutonium that have built up are well-guarded, critics have argued that some operations in the civilian plutonium industry are potentially vulnerable to nuclear theft.[12]

The administration has acknowledged that the huge stockpiles of weapons-usable separated civil plutonium built up as a result of traditional PUREX reprocessing (now roughly equal to all world military plutonium stockpiles combined, remarkably) "pose a growing proliferation risk" that "simply must be dealt with."[13]

---

[10] See, for example, John Deutch et al., "Making the World Safe for Nuclear Energy," Survival 46, no. 4 (Winter 2004; available at http://www.world-nuclear.org/opinion/survival.pdf as of 7 July 2006); Ashton B. Carter and Stephen A. LaMontagne, "Toolbox: Containing the Nuclear Red Zone Threat," The American Interest (Spring 2006). Unfortunately, the way a few GNEP advocates have presented the idea, focusing on a new regime of discrimination and denial in which all but a few states would be denied access to enrichment and reprocessing technology, is unlikely to make the concept popular among the potential recipients of such fuel leases. A substantively similar but more appealing approach is to say that, in effect, countries will be offered more than they have ever been offered before under Article IV of the Nonproliferation Treaty: a guarantee of life-cycle fuel supply and spent fuel management for as many reactors as they choose to build, if they agree that, at least for an agreed period, they will not pursue enrichment and reprocessing facilities of their own.

[11] For an authoritative unclassified discussion, see "Nonproliferation and Arms Control Assessment of Weapons-Usable Fissile Material Storage and Excess Plutonium Disposition Alternatives", DOE/NN–0007 (Washington DC: U.S. Department of Energy, January 1997), pp. 38–39.

[12] Ronald E. Timm, "Security Assessment Report for Plutonium Transport in France" (Paris: Greenpeace International, 2005; available at http://greenpeace.datapps.com/stop-plutonium/en/TimmReportV5.pdf as of 6 December 2005).

[13] Samuel Bodman, "Carnegie Endowment for International Peace Moscow Center: Remarks as Prepared for Secretary Bodman" (Moscow: U.S. Department of Energy, 2006; available at http://energy.gov/news/3348.htm as of 17 March 2006). This characterization seems oddly out of tune with the schedule of the administration's proposed solution, advanced burner reactors that will not be available in significant numbers to address this "growing" risk for decades. In a similar vein, the British Royal Society, in a 1998 report, warned that even in an advanced industrial state like the United Kingdom, the possibility that plutonium stocks might be "accessed for illicit weapons production is of extreme concern." The Royal Society, "Management of Separated

Continued

If the administration is worried about these stockpiles of separated plutonium, they should also worry about the plutonium-uranium mixes that would be separated in the COEX process now being considered. As U.S. Government examinations of the question have concluded, nuclear explosives could still be made directly from the roughly 50/50 plutonium-uranium mixes that COEX advocates refer to, though the quantity of material required for a bomb would be significantly larger. Moreover, any state or group with the capability to do the difficult job of designing and building an implosion-type bomb from pure plutonium would have a good chance of being able to accomplish the simpler job of separating pure plutonium from such a plutonium-uranium mix. The job could be done in a simple glove-box with commercially available equipment and chemicals, using any one of a number of straightforward, published processes. For these reasons, under either U.S. or international guidelines, such a mixture would still be considered Category I material, posing the highest levels of security risk and requiring the highest levels of security. When such approaches were last seriously considered in the United States three decades ago, the Nuclear Regulatory Commission concluded that "lowering the concentration of plutonium through blending [with uranium] should not be used as a basis for reducing the level of safeguards protection," and that the concentration of plutonium in the blend would have to be reduced to 10 percent or less—far less than being considered for COEX—for the safeguards advantages to be "significant."[14] The repeated statement that these processes will result in "no pure plutonium" is a talking point, not a serious analysis of proliferation and security impacts.

GNEP advocates argue that approaches such as UREX+ would be more proliferation-resistant, because the minor actinides (and perhaps a few of the lanthanide fission products) would remain with the plutonium, making the separated product more radioactive and more problematic to steal and process into a bomb.[15] But the processing proposed in UREX+ still takes away the great mass of the uranium and the vast majority of the radiation from the fission products, making the process far less proliferation-resistant than simply leaving the plutonium in the spent fuel. Indeed, the plutonium-bearing materials that would be separated in either the UREX+ process or by pyroprocessing would not be remotely radioactive enough to meet international standards for being "self-protecting" against possible theft.[16] Thus, the approach may be considered modestly more proliferation-resistant than traditional PUREX reprocessing, but it is far less proliferation-resistant than not reprocessing at all.

Proponents of reprocessing and recycling often argue that this approach will provide a nonproliferation benefit by consuming the plutonium in spent fuel, which would otherwise turn geologic repositories into potential plutonium mines many hundreds or thousands of years in the future. But the proliferation risk posed by spent fuel buried in a safeguarded repository is already modest; if the world could be brought to a state in which such repositories were the most significant remaining proliferation risk, that would be cause for great celebration. Moreover, this risk will be occurring a century or more from now, and if there is one thing we know about the nuclear world a century hence, it is that we know almost nothing about it. We should not increase significant proliferation risks in the near term in order to reduce already small and highly uncertain proliferation risks in the distant future.[17]

Plutonium" (London: Royal Society, 1998, available at http://www.royalsoc.ac.uk/displaypagedoc.asp?id=18551 as of 16 July 2006.

[14] Office of Nuclear Material Safety and Safeguards, U.S. Nuclear Regulatory Commission, "Safeguarding a Domestic Mixed Oxide Industry against a Hypothetical Subnational Threat", NUREG–0414 (Washington, DC: NRC, 1978), pp. 6.8–6.10.

[15] Of all the various impacts of civilian nuclear energy on proliferation, this would only help with respect to the difficulty of theft of the separated material and processing it into a bomb: while that is not unimportant, many other issues should be considered in assessing proliferation resistance of a nuclear energy system, particularly as there has never yet been an historical case in which the radiation level of the material involved was the key in determining the civilian nuclear system's impact on proliferation outcomes. For a discussion of broader issues that should be considered in assessing proliferation-resistance, and rough measures for assessing them, see Matthew Bunn, "Proliferation-Resistance (and Terror-Resistance) of Nuclear Energy Systems" lecture, Massachusetts Institute of Technology, 1 May 2006, available at http://bcsia.ksg.harvard.edu/BCSIA_content/documents/proliferation_resist_lecture06.pdf as of 12 September 2006.

[16] See Jungmin Kang and Frank von Hippel, "Limited Proliferation-Resistance Benefits From Recycling Unseparated Transuranics and Lanthanides From Light-Water Reactor Spent Fuel," Science and Global Security, Vol. 13, pp. 169–181, 2005, available as of 16 July 2006 at http://www.princeton.edu/~globsec/publications/pdf/13_3%20Kang%20vonhippel.pdf

[17] For a discussion, see John P. Holdren, "Nonproliferation Aspects of Geologic Repositories," presented at the "International Conference on Geologic Repositories," October 31–November 3,

With crises brewing over the nuclear programs of North Korea and Iran, and a variety of targets for nuclear theft that are more vulnerable than most of the proposed recycling operations in GNEP would be likely to be (such as HEU-fueled research reactors in many countries, for example), the issues raised by GNEP are not among the world's highest proliferation risks. But they are real risks nonetheless, and running them is entirely unnecessary, given the availability of dry cask storage as a secure alternative.

SAFETY AND SECURITY

No complete life-cycle study of the safety and terrorism risks of reprocessing and recycling compared to those of direct disposal has yet been done by disinterested parties. But it seems clear that extensive processing of intensely radioactive spent fuel using volatile chemicals presents more opportunities for release of radionuclides—either by accident or by sabotage—than does leaving spent fuel untouched in thick metal or concrete casks. While the safety record of the best reprocessing plants is good, it is worth remembering that until Chernobyl, the world's worst nuclear accident had been the explosion at the reprocessing plant at Khyshtym (site of what is now the Mayak Production Association) in 1957, and significant accidents occurred at both Russian and Japanese reprocessing plants as recently as the 1990's. The British THORP plant is returning to operation after the 2005 discovery of a massive leak of radioactive acid solution containing tens of tons of uranium and some 160 kilograms of plutonium, which had gone unnoticed for months (though none of this material ever left the plant, and there was no known radioactive release).

ENVIRONMENTAL IMPACT

The question, then, is whether the benefits reprocessing and recycling would bring are large enough to justify accepting this daunting list of costs and risks.

One potential benefit of recycling is to reduce the expected doses to humans and the environment from a geologic repository. Reprocessing and recycling as currently practiced (with only one round of recycling the plutonium as uranium-plutonium mixed oxide (MOX) fuel) would not reduce such doses substantially.

Some of the approaches envisioned for the long-term track of GNEP call instead for separating all the actinides and irradiating them repeatedly in advanced burner reactors, so that all but a small percentage of the actinides would be fissioned. Some of the more troublesome long-lived fission products might be transmuted as well. If developed and implemented successfully, these approaches might provide a substantial reduction in projected long-term radiological doses from a geologic repository. But the projected long-term radioactive doses from a geologic repository are already low; hence the benefit of reducing them further is small. While the relevant studies have not yet been done, it seems very likely that if reducing environmental risks from the repository were the principal goal of recycling, the cost per life saved would be in the billions of dollars—and those possibly saved lives would be tens of thousands of years in the future. (Most of the discussions of these issues focus only on the high-level wastes, but the substantial volumes of transuranic and low-level wastes generated in the course of reprocessing and of decommissioning the relevant facilities must also be considered.)

Moreover, the near-term environmental impacts of reprocessing and recycling (including fabrication, transport, and use of the proposed highly radioactive fuels), even when balanced in part by the reduction in the amount of uranium mining that would be required, are likely to overwhelm the possible long-term environmental benefit of reduced exposures from a geologic repository—though no credible study has yet been done comparing these risks for the proposed GNEP fuel cycle and once-through fuel cycles.

SUSTAINABILITY

Advocates argue that the recycling proposed in GNEP justifies its costs and risks because, with a growing nuclear energy enterprise in the future, a once-through approach would soon run short of either uranium or repository space. But neither uranium nor repository space is in as short supply as advocates claim.

1999, Denver, Colorado; available as of 16 July 2006 at http://bcsia.ksg.harvard.edu/publication.cfm?program=CORE&ctype=presentation&item_id=1.

URANIUM SUPPLY

As with environmental impact, traditional reprocessing with one round of MOX recycling has only very modest benefit in extending uranium resources. The amount of energy generated from each ton of uranium mined is increased by less than 20 percent.[18]

Recycling and breeding in fast neutron reactors, by contrast, could potentially extend uranium resources dramatically. But world resources of uranium likely to be economically recoverable at prices far below the price at which reprocessing and breeding would be economic are sufficient to fuel a growing global nuclear enterprise for many decades, relying on direct disposal without recycling.[19] Indeed, in the last decade, the "Red Book" estimates of world uranium resources have been increasing far faster than uranium has been consumed[20]—and that trend is likely to accelerate substantially now that high prices are leading to far larger investments in uranium exploration. The more we look, the more uranium we are likely to find.

The current run-up in uranium prices has nothing to do with a lack of resources in the ground, but only with constraints on bringing on new production to exploit those resources to meet market demand. At a current price of over $100/kgU, producers able to provide supply at costs of less than $40/kgU are making immense profits; market players, seeing those profits, will attempt to bring additional supply on-line, ultimately bringing demand and supply into better balance and driving prices down. This will be difficult to do quickly, because of regulatory and political constraints in uranium-producing countries. But it would be surprising indeed if the price remained far above the cost of production for decades.

Nor does reprocessing serve the goal of energy security, even for countries such as Japan, which have very limited domestic energy resources. If energy security means anything, it means that a country's energy supplies will not be disrupted by events beyond that country's control. Yet events completely out of the control of any individual country—such as a theft of poorly guarded plutonium on the other side of the world—could transform the politics of plutonium overnight and make major planned programs virtually impossible to carry out. Japan's experience following the scandal over BNFL's falsification of safety data on MOX fuel, and following the accidents at Monju and Tokai, all of which have delayed Japan's plutonium programs by many years, makes this point clear. If anything, plutonium recycling is much more vulnerable to external events than reliance on once-through use of uranium.

REPOSITORY SPACE SUPPLY

Perhaps the most important single argument for GNEP's focus on recycling is the belief that there will never be a second nuclear waste repository in the United States, so we need to figure out a way to pack all the nuclear waste from decades of a growing nuclear energy enterprise into the Yucca Mountain repository.[21]

The size of a repository needed for a given amount of waste is determined not by the volume of the waste but by its heat output. If the proposed long-term GNEP approach met all of its technical goals for removing and transmuting the actinides that generate much of the long-term heat it could indeed make it possible to dramatically expand the capacity of the proposed Yucca Mountain repository.[22] Few of

[18] John Deutch and Ernest J. Moniz, co-chairs, "The Future of Nuclear Power: An Interdisciplinary MIT Study" (Cambridge, MA: Massachusetts Institute of Technology, 2003, available as of June 9, 2005 at http://web.mit.edu/nuclearpower/), p. 123. They present this result as uranium consumption per kilowatt-hour being 15 percent less for the recycling case; equivalently, if uranium consumption is fixed, then electricity generation is 18 percent higher for the recycling case.

[19] For discussion, see "Appendix B: World Uranium Resources," in Bunn, Fetter, Holdren, and van der Zwaan, The Economics of Reprocessing.

[20] In 1997, the estimate for the sum of reasonably assured resources (RAR) and inferred resources available at $80/kgU or less was 3.085 million tons, while in 2005 it was 3.804 million tons, an increase of 23 percent in 8 years, despite the very low level of investment in uranium exploration until the end of that period. See Organization for Economic Cooperation and Development, Nuclear Energy Agency, "Uranium 1997: Resources, Production, and Demand" (Paris: OECD–NEA, 1998), and "Uranium 2005: Resources, Production, and Demand" (Paris: OECD–NEA, 2006). Indeed, the press release for the 2005 edition was entitled: "Uranium: plenty to sustain growth of nuclear power."

[21] For a cogent version of this argument for recycling, see Per F. Peterson, "Will the United States Need a Second Repository?" The Bridge, Vol. 33, No. 3, pp. 26–32, Fall 2003.

[22] Roald A. Wigeland, Theodore H. Bauer, Thomas H. Fanning, and Edgar E. Morris, "Separations and Transmutation Criteria to Improve Utilization of a Geologic Repository," Nuclear Technology, Vol. 154, April 2006, pp. 95–106.

the technical goals required to achieve this objective have yet been demonstrated, however.

It is important to understand that traditional approaches to reprocessing, with one round of MOX recycling, would not have this benefit. Because of the build-up of heat-emitting higher actinides when plutonium is recycled, the total heat output of the waste per kilowatt-hour generated may actually be somewhat higher—and therefore the needed repositories larger and more expensive—when disposing of HLW from reprocessing and spent MOX fuel after one round of recycling than it is for direct disposal of LEU spent fuel.[23] The spent MOX could in principle be reprocessed for transmutation in fast reactors, but that would require success in developing appropriate transmutation fuels and reactors.

In any case, repository space, like uranium, is a more plentiful resource than GNEP advocates have argued. Means to increase the quantity of spent fuel that can be emplaced in Yucca Mountain while remaining within thermal limits are only now being examined seriously, and the latest estimates indicate that the Yucca Mountain repository can almost certainly hold over 260,000 tons of spent fuel (an amount that would not exist until well into the latter half of the century even with rapid nuclear growth); it may well be able to hold 570,000 tons or more.[24] As researchers at the Electric Power Research Institute put it: "Thus, it is possible for Yucca Mountain to hold not only all the waste from the existing U.S. nuclear power plants, but also waste produced from a significantly expanded U.S. nuclear power plant fleet for at least several decades."[25]

Moreover, whatever the merits of the repository-space argument, it applies primarily—or possibly only—to the United States. Only the United States has chosen a repository site inside a mountain with fixed boundaries, whose capacity therefore cannot be increased indefinitely by simply digging more tunnels. Most other countries are examining sites in huge areas of rock, where the amount of waste from centuries of nuclear waste generation could be emplaced at a single site, if desired.[26] For this reason, measuring quantities of spent fuel in "Yucca Mountain equivalents" is highly misleading; if, in fact, a second repository is ever needed, it is unlikely that the Nation will again make the mistake of choosing one that is not readily expandable.

This argument for recycling and transmutation is based on the questionable assumption that while it would be very difficult to gain public acceptance and licensing approval for a second repository, it would not be very difficult to gain public and regulatory approval for the complex and expensive spent fuel processing and transmutation facilities needed to implement this approach—including scores of advanced burner reactors. This assumption appears very likely to be wrong. Reprocessing of spent fuel has been fiercely opposed by a substantial section of the interested public in the United States for decades—and the real risks to neighbors from a large above-ground reprocessing plant performing daily processing of spent fuel are inevitably larger than those from nuclear wastes sitting quietly deep underground. Similarly, there seems little doubt that licensing and building the new reactor types required would be an enormous institutional and political challenge.

The proposed GNEP approaches are an extremely expensive way to solve the problem, if there is one. The recent Harvard study concluded that if, as recent international reviews suggest, the more complex separations involved in a transmutation approach would be somewhat more expensive than traditional reprocessing, and fabrication of the intensely radioactive transmutation fuels would be somewhat more expensive than traditional MOX fabrication, and if the needed transmutation reactors or accelerators would have a capital cost roughly $200/kWe higher than that

---

[23] See, for example, Brian G. Chow and Gregory S. Jones, "Managing Wastes With and Without Plutonium Separation", Report P–8035 (Santa Monica, CA: RAND Corporation, 1999). Some other studies suggest a modest benefit (perhaps 10 percent) from one round of reprocessing and recycling: the differences depend on detailed assumptions about such matters as how long the spent fuel or reprocessing wastes would be stored before being emplaced in a repository, how long active cooling in the repository is assumed to continue, and the like.

[24] "Program on Technology Innovation: Room at the Mountain—Analysis of the Maximum Disposal Capacity for Commercial Spent Nuclear Fuel in a Yucca Mountain Repository" (Palo Alto, Calif: Electric Power Research Institute, May 2006, available as of 12 September 2006 at http://www.epriweb.com/public/000000000001013523.pdf)

[25] "Program on Technology Innovation: Room at the Mountain".

[26] Granite formations do often have faulting in some areas that could limit the total area that could be used at a particular repository site—but sites will presumably be chosen to be far from nearby faults, and very large amounts of total material can be emplaced at typical sites of this type. Even at Yucca Mountain, there are other mountain ridges in the same area that have similar geology, and could potentially be defined as part of the "same" repository. Ultimately the issue is less the technical limits on repository capacity than the political limits on how much material can be emplaced at a particular location.

of comparably advanced one-through systems (a quite optimistic assumption, given past experience), then separations and transmutation for this purpose would not be economic until the cost of disposal of spent fuel reached some $3,000 per kilogram of heavy metal, many times its current level.[27]

The repository-space argument for recycling is also based on a further questionable assumption—that even decades in the future, when repository space has become scarce and reactor operators become willing to pay a substantial price for it, it will still not be possible to ship spent fuel from one country to another for disposal. (This is an odd assumption given GNEP's simultaneous emphasis on fuel leasing, involving countries shipping back spent fuel to the state that provided it.) If, in fact, repository capacity does become scarce in the future, reactor operators will likely be willing to pay a price for spent fuel disposal well above the cost of providing the service, and it seems quite likely that if the potential price gets high enough, the opportunity for enormous profit will motivate some country with an indefinitely-expandable repository to overcome the political obstacles that have blocked international storage and disposal of spent fuel in the past, and offer to accept spent fuel from other countries on a commercial basis. (It is worth noting that Russia has already passed legislation approving such imports of foreign spent fuel, though the prospects for implementation of that project remain uncertain.)[28]

In short, once-through approaches will likely be able to provide sustainable uranium supply and repository space supply for a growing nuclear energy enterprise around the world for many decades or more, with costs and environmental impacts lower than or comparable to those of the proposed GNEP approaches.

COMMERCIAL-SCALE DEMONSTRATIONS AND THE GNEP R&D PROGRAM

A substantial R&D program to develop improved approaches to nuclear energy is justified. Such a program should include R&D on optimized approaches to spent fuel management, including both improved once-through approaches and recycling approaches. These efforts should be based on in-depth life-cycle systems analysis of different potential options, both to choose which approaches may be best and to identify the most important technical objectives for the R&D effort.

Unfortunately, however, DOE appears to be shifting its GNEP efforts to focus on building commercial-scale facilities, without having completed either the R&D on relevant technologies or the detailed systems analyses needed to make wise choices. In the request for expressions of interest issued in August, DOE envisions building a reprocessing and fuel fabrication plant known as the Consolidated Fuel Treatment Center (CFTC) with a capacity to process 2,000–3,000 tons of spent fuel per year—roughly three times the capacity of the largest single plants that currently exist—and an advanced burner reactor (ABR) that might have a capacity of 200–800 MWe.[29] In response to questions from industry, DOE indicated that it hoped to begin construction of such facilities in 2010, only 4 years from now.[30] The subcommittee, in considering what direction to give DOE on this proposed approach and whether to appropriate the many billions of dollars that would be required to build these facilities, should ask a number of questions:

—Even under the very optimistic assumptions of the BCG report, would it not be reasonable to estimate that the cost of building the CFTC and the ABR would be in the range of $20 billion?[31]

---

[27] Bunn, Fetter, Holdren, and van der Zwaan, "The Economics of Reprocessing", pp. 64–65.

[28] For an extensive discussion of the political history and prospects for such concepts, see Chapter 4 of Matthew Bunn et al., "Interim Storage of Spent Nuclear Fuel: A Safe, Flexible, and Cost-Effective Near-Term Approach to Spent Fuel Management" (Cambridge, Mass.: Project on Managing the Atom, Harvard University, and Project on Sociotechnics of Nuclear Energy, Tokyo University, 2001; available at http://bcsia.ksg.harvard.edu/BCSIA_content/documents/spentfuel.pdf as of 18 May 2006).

[29] U.S. Department of Energy, "Notice of Request for Expressions of Interest in a Consolidated Fuel Treatment Center to Support the Global Nuclear Energy Partnership," Federal Register, 7 August 2006, Vol. 71, No. 151, pp. 44676–44679, and U.S. Department of Energy, "Notice of Request for Expressions of Interest in an Advanced Burner Reactor to Support the Global Nuclear Energy Partnership," Federal Register, 7 August 2006, Vol. 71, No. 151, pp. 44673–44676.

[30] U.S. Department of Energy, "Q&As From August 14, 2006 GNEP Industry Briefing," available as of 12 September 2006 at www.gnep.energy.gov/gnepCFTCABREOIBriefingQAs.html.

[31] The BCG report estimates that a facility of the same scale proposed for the CFTC would have an overnight capital cost of over $16 billion, not counting interest during construction or decommissioning. BCG, "Economic Assessment of Used Nuclear Fuel Management in the United States", p. 16. As described in the appendix to this testimony, the BCG figures are unrealistically optimistic. The cost to develop and build the ABR would certainly be in the billion-dollar range.

—Is it not likely that cost estimates will grow substantially as the project proceeds, if it does? Can DOE provide any recent example of a DOE project of comparable scale and complexity that did not suffer the kind of cost growth that has afflicted the Hanford vitrification project and the Savannah River MOX plant?

—How does DOE expect to finance these costs? From appropriations? From the Nuclear Waste Fund? If the latter, would sufficient funds remain for Yucca Mountain?

—Is there any previous example in DOE's history in which the department successfully built and operated—or financed the construction and operation of—a commercial-scale facility of this complexity?

—What is DOE's past record of success and failure in picking winners among a range of possible technologies for commercial deployment? Why should we believe that this approach will be suitable in this case?

—What life-cycle systems analyses of cost, safety, security, sustainability, and proliferation-resistance led DOE to conclude that this proposed approach is preferable to other options? What independent review has there been of these analyses? Can DOE provide those analyses?

—What life-cycle analyses has DOE performed of management of the low-level and transuranic wastes that will be generated by these facilities, including from their eventual decommissioning? Would any of these wastes have to be disposed of in Yucca Mountain or WIPP? If so, how does this affect estimates of the increase in repository capacity that could be achieved?

—Does a decision to move immediately toward deployment of commercial-scale facilities mean that promising technologies still requiring significant development cannot be seriously considered for use in these major facilities? What factors led DOE to conclude it was time to choose available technologies and begin building facilities rather than continuing to pursue R&D on a range of potential separations, fabrication, and reactor technologies?

—What impact will building huge facilities using existing technologies have on R&D on long-term technologies? Is it likely that DOE will receive sufficient funding both to proceed directly to construction of these large facilities and to continue a robust research program on a wide range of technologies? Is it likely that building these large facilities would take money, personnel, and leadership focus away from long-term R&D?

—What does DOE believe this investment would buy us? How can the technologies to be pursued simultaneously be so mature that we can go straight to construction of commercial-scale facilities and so immature that they require demonstration? Does this proposal amount to spending billions of dollars to build these facilities before completing the R&D that would make it possible to know whether they would ever have the hoped-for repository benefits? If the CFTC is not expected to produce transmutation fuels, and R&D on appropriate separations, fabrication, and reactor technologies for transmutation is still under way, how confident can we be that once built, these facilities will prove to be what is needed for the transmutation mission? What does DOE plan to do if further analysis and R&D leads to the conclusion that these facilities are poorly suited to that mission?

—What would the proliferation impacts be of building these facilities? What independent review has been done of those impacts?

—Since processing 2,000–3,000 tons of spent fuel each year would provide some 20–30 tons of plutonium, while the ABR would likely require less than 1 ton per year, what does DOE plan to do with the rest of the product of the CFTC? Given that DOE is planning to spend billions of dollars on disposition of some 50 tons of excess plutonium, is there a danger of adding that amount to DOE's stockpile every 2 years?

—Is it really likely that the complex separations involved in UREX+, which have only been demonstrated on a kilogram scale, could be scaled to processing thousands of tons of spent fuel per year without any intermediate steps? If not, would a facility be built that uses PUREX or COEX? If so, what then happens to the objectives of separating and transmuting all of the actinides, or providing a process with improved proliferation resistance (which the subcommittee has rightly emphasized must be maintained in the development of recycling technologies)?

As these questions suggest, I believe that what is needed now is patient R&D and in-depth systems analysis, rather than a rush to build big facilities. As Richard Garwin has put it, by picking winners prematurely, the proposed GNEP approach "would launch us into a costly program that would surely cost more to do the job

less well than would a program at a more measured pace guided by a more open process."[32]

RECOMMENDATIONS

What, then, should we do? I recommend the following steps:

—*(1) Focus First on Interim Storage*.—Whatever option we pursue, additional interim storage capacity will be needed. Storing spent fuel in dry casks leaves all options open for the future, as technology develops and political and economic circumstances change. (Indeed, since the Yucca Mountain repository will remain open for a century or more, even direct disposal will leave all options open for a long time to come.) At least some centralized storage capacity is needed to address particular needs; whether nearly all of the spent fuel should be moved to a centralized away-from-reactor site or site depends on a number of factors that require further analysis. Here, too, we should not let frustration with the current state of affairs prevent us from taking the time to get it right: a rushed process for siting and licensing such facilities is a recipe for public opposition and ultimate failure, adding to the long history of failed attempts to site centralized interim storage facilities in the United States. In a 2001 study, we provided a detailed outline of a democratic and voluntary process for siting such facilities, based on approaches that had been applied successfully in siting other hazardous and unwanted facilities, and I would urge that such an approach be followed here.[33] I am pleased, Mr. Chairman, that you have encouraged the American Physical Society to examine these issues in depth.

—*(2) Pursue a broad R&D program to improve spent fuel management*.—Someday, recycling technologies may be developed which are substantially cheaper and more proliferation-resistant than those now available. R&D should be pursued to explore such possibilities. In parallel, there should also be R&D on improved approaches to direct disposal.[34] As the technologies develop, we should regularly re-examine which of them appear to offer the best combination of cost, safety, security, proliferation-resistance, and sustainability. At the same time, we should not allow an expansion of nuclear R&D to overwhelm R&D on other promising energy technologies: the United States urgently needs to undertake expanded investments in a wide range of energy R&D.

—*(3) Build political sustainability*.—As it takes decades to develop and fully implement nuclear technologies, stable government policies are crucial to success. Stable policies require some degree of bipartisan consensus. The current GNEP effort has devoted virtually no noticeable effort to developing such bipartisan support. Without it, the probability of failure is high. In my judgment, approaches based on interim storage, continued R&D on a wide range of options, and continued forward movement toward a permanent repository have far better chances of being politically sustainable than approaches focused on near-term construction of reprocessing plants and fast neutron reactors.

—*(4) Move forward deliberately with the Yucca Mountain repository*.—Whether we ultimately pursue once-through or recycling options, we will ultimately need a repository. We should move forward with that effort, again taking the time to get the analysis right and to build as much support as we practicably can.

—*(5) Develop and analyze first, build later*.—Today, technologies that might someday be able to meet the technical objective of transmuting nearly all of actinides remain in their infancy; some, like UREX+, have been demonstrated only on a kilogram scale, while others, like fabrication of transmutation fuels or construction of fast reactors with very low conversion ratios, we do not yet know are feasible. At the same time, detailed life-cycle systems analyses of the cost, safety, security, proliferation-resistance, and sustainability of the proposed technologies, compared to those of similarly advanced once-through systems, have not yet been done. To construct major facilities without first doing these system analyses is like choosing which car to buy without knowing the cost, gas mileage, reliability, or safety performance of any of the models available. GNEP should focus intensely on the kind of systems analysis that can reveal which options have critical flaws and where the greatest opportunities for R&D lie, including accelerating the development of improved systems analysis tools. Large-scale reprocessing and transmutation facilities should not be built until detailed

[32] Richard L. Garwin, "R&D Priorities for GNEP," testimony to the U.S. House of Representatives, Committee on Science, Subcommittee on Energy, 6 April 2006.

[33] Bunn et al., "Interim Storage", pp. 95–116.

[34] For a discussion, see Garwin, "R&D Priorities for GNEP." For a discussion of R&D that should be pursued on improved once-through options, see Deutch, Moniz, et al., "The Future of Nuclear Power".

analysis has indicated that they offer a combination of cost, safety, security, proliferation-resistance, and sustainability superior to potential alternatives, including direct disposal. Independent review is an important part of such analyses, and of building bipartisan support. As a first step, I recommend that in conference, the subcommittee accept the House language calling for an in-depth peer review of the entire fuel recycling plan by the National Academies before any expensive facilities are built.

—*(6) Increase the focus on other key elements of GNEP.*—As noted earlier, the proposal to offer reliable guarantees of fuel supply and spent fuel management, in order to help convince countries to forego building their own reprocessing and enrichment facilities, is extremely important and should receive even more attention and effort than it has to date. Similarly, the GNEP elements related to developing advanced safeguards technologies and small, rapidly deployable reactors for deployment in developing countries should be pursued more vigorously. Neither received funding in the President's budget request, and I commend the subcommittee for seeking to correct that omission.

—*(7) Redouble key efforts to stem the spread of nuclear weapons materials and technologies.* The U.S. Government should significantly increase its efforts to: (a) limit the spread of reprocessing and enrichment technologies, as a critical element of a strengthened nonproliferation effort; (b) ensure that every nuclear warhead and every kilogram of separated plutonium and highly enriched uranium (HEU) worldwide are secure and accounted for, as the most critical step to prevent nuclear terrorism;[35] (c) work with other countries to put in place strengthened export controls and greatly strengthened intelligence and law enforcement cooperation focused on illicit nuclear trafficking, to smash what remains of the A.Q. Khan network and prevent a recurrence; (d) convince other countries to end the accumulation of plutonium stockpiles, and work to reduce stockpiles of both plutonium and HEU around the world.

In short, I recommend that we follow the advice of the bipartisan National Commission on Energy Policy, which reflected a broad spectrum of opinion on energy matters generally and on nuclear energy in particular, and recommended that the United States should:

—(1) "continue indefinitely the U.S. moratoria on commercial reprocessing of spent nuclear fuel and construction of commercial breeder reactors";

—(2) establish expanded interim spent fuel storage capacities "as a complement and interim back-up" to Yucca Mountain;

—(3) proceed "with all deliberate speed" toward licensing and operating a permanent geologic waste repository; and

—(4) continue research and development on advanced fuel cycle approaches that might improve nuclear waste management and uranium utilization, without the huge disadvantages of traditional approaches to reprocessing.[36]

Similar recommendations have been made in the MIT study on the future of nuclear energy,[37] and in the American Physical Society study of nuclear energy and nuclear weapons proliferation.[38]

The global nuclear energy system would have to grow substantially if nuclear energy was to make a substantial contribution to meeting the world's 21st century needs for carbon-free energy. Building the support from governments, utilities, and publics needed to achieve that kind of growth will require making nuclear energy as cheap, as simple, as safe, as proliferation-resistant, and as terrorism-proof as possible. Reprocessing using any of the technologies likely to be available in the near term points in the wrong direction on every count.[39] Those who hope for a bright

---

[35] For detailed recommendations, see Matthew Bunn and Anthony Wier, "Securing the Bomb 2006" (Cambridge, Mass., and Washington, DC: Project on Managing the Atom, Harvard University, and Nuclear Threat Initiative, July 2006, available as of 16 July 2006 at http://www.nti.org/securingthebomb).

[36] National Commission on Energy Policy, "Ending the Energy Stalemate: A Bipartisan Strategy to Meet America's Energy Challenges" (Washington, DC: National Commission on Energy Policy, December 2004, available as of June 9, 2005, at http://www.energycommission.org/ewebeditpro/items/O82F4682.pdf), pp. 60–61.

[37] Deutch, Moniz, et al., "The Future of Nuclear Power".

[38] Nuclear Energy Study Group, American Physical Society Panel on Public Affairs, "Nuclear Power and Proliferation Resistance: Securing Benefits, Limiting Risk" (Washington, DC: American Physical Society, May 2005, available as of 16 July 2006 at http://www.aps.org/public_affairs/proliferation-resistance).

[39] For earlier discussions of this point, see, for example, John P. Holdren, "Improving U.S. Energy Security and Reducing Greenhouse-Gas Emissions: The Role of Nuclear Energy," testimony to the Subcommittee on Energy and Environment, Committee on Science, U.S. House of Rep-

Continued

future for nuclear energy, therefore, should oppose near-term reprocessing of spent nuclear fuel.

APPENDIX: BRIEF CRITIQUE OF THE BOSTON CONSULTING GROUP STUDY, "ECONOMIC ASSESSMENT OF USED NUCLEAR FUEL MANAGEMENT IN THE UNITED STATES"

In July 2006, the Boston Consulting Group (BCG) published a report which concluded that the costs of reprocessing and recycling spent nuclear fuel in the United States would be "comparable" to the costs of direct disposal of spent nuclear fuel.[40] This conclusion was in stark contrast to those of most other recent studies, which concluded that reprocessing and recycling would significantly increase the costs of spent fuel management.[41] The BCG study, however, makes a wide range of unjustified assumptions, and its cost estimates should not be used as the basis for policy-making. The real cost of reprocessing and recycling in the United States would almost certainly turn out to be far higher than the costs estimated in the BCG report.

Indeed, the BCG study itself appears to agree that it should not be used as the basis for policy-making. After acknowledging that the study was initiated and paid for by Areva, the firm that operates France's reprocessing plants, and that BCG made no attempt to verify any of the data provided by Areva, the study warns: "Any other party [than Areva] using this report for any purpose, or relying on this report in any way, does so at their own risk. No representation or warranty, express or implied, is made in relation to the accuracy or completeness of the information presented herein or its suitability for any particular purpose."[42]

The BCG conclusions float on a sea of optimistic assumptions:

—BCG assumes a unit cost for both reprocessing and MOX fabrication of $630/kgHM (undiscounted), far lower than current plants have managed to achieve for either process.[43] (BCG provides, for example, an interesting chart showing that their estimate for reprocessing cost per kilogram is roughly one-third the cost actually achieved in France.[44]) As they put it themselves, one of the "key differentiating elements" between their study and other studies is "integrated plant costs significantly lower than previously published data."[45]

—By contrast, the current effort to use Areva technology and plant designs in the United States—the construction of a MOX plant at Savannah River—is leading to unit costs several times higher than those achieved in France.[46] This experience is not mentioned in the BCG report, and no argument is offered as to why the projected facility will have a cost result that is the opposite of the real experience.

—They reach these extremely low-unit cost estimates for their projected plant by using a large number of dubious assumptions:

  —They envision a reprocessing and MOX fabrication plant far larger than any other such plant that exists in the world, processing 2,500 tons of spent fuel every year (compared to 800 tons per year in the largest single plants that have been built to date).

  —They assume that plant capacity can be scaled up dramatically with only a minor increase in capital or operating cost. They note that the capital cost of

---

resentatives, 25 July 2000, available as of 16 July 2006 at bcsia.ksg.harvard.edu/publication.cfm?program=CORE&ctype=testimony&item_id=9; and Matthew Bunn, "Enabling A Significant Future For Nuclear Power: Avoiding Catastrophes, Developing New Technologies, Democratizing Decisions—And Staying Away From Separated Plutonium," in "Proceedings of Global '99: Nuclear Technology—Bridging the Millennia", Jackson Hole, Wyoming, August 30-September 2, 1999 (La Grange Park, Ill.: American Nuclear Society, 1999, available as of 16 July 2006 at bcsia.ksg.harvard.edu/publication.cfm?program=CORE&ctype=book&item_id=2).

[40] BCG, "Economic Assessment of Used Nuclear Fuel Management in the United States", p. vi.

[41] See sources cited in the main text, and other sources cited therein.

[42] BCG, "Economic Assessment of Used Nuclear Fuel Management in the United States", p. iv.

[43] BCG, "Economic Assessment of Used Nuclear Fuel Management in the United States", p. 15.

[44] BCG, "Economic Assessment of Used Nuclear Fuel Management in the United States", p. 17.

[45] BCG, "Economic Assessment of Used Nuclear Fuel Management in the United States", p. 14.

[46] For a discussion of the remarkable cost growth of the Savannah River MOX plant, see, for example, Subcommittee on Strategic Forces, Committee on Armed Services, "Plutonium Disposition and the U.S. Mixed Oxide Fuel Facility", U.S. House of Representatives, 109th Congress, 2nd Session (26 July 2006; available at http://www.house.gov/hasc/schedules/as of 10 August 2006). See also U.S. Department of Energy, Office of the Inspector General, "Audit Report: Status of the Mixed Oxide Fuel Fabrication Facility", DOE/IG–0713 (Washington, DC: 2005; available at http://www.ig.doe.gov/pdf/ig-0713.pdf as of 26 May 2006).

the existing French facilities was $17.8 billion (in 2005 dollars), but they assume that the capacity can be increased by more than 50 percent (assuming, generously, that the two La Hague plants should be considered to have a combined capacity of 1,600 tons of heavy metal per year) with an additional capital cost of only $1.5 billion, less than 10 percent of the original capital cost.[47]

—They assume that the plant will always operate at nearly full capacity with no technical problems and no contract delays. No reprocessing plant or MOX plant in the world has ever done so.

—Indeed, they apparently assume that there will never be a lag in fuel fabrication, since, to save money, they cut out all funding for having a plutonium storage area.[48] In France, by contrast, tens of tons of plutonium have built up in storage as a result of lags in the use of this plutonium as fuel.

—With a hugely increased plant capacity compared to existing plants, far higher plant utilization than existing plants, and very small increases in capital and operating costs to achieve these vast increases in throughput, it is not surprising that they find that the cost per kilogram of spent fuel processed would be much lower than the cost in existing plants. This is simply not a realistic estimate, however, of what the real costs would be likely to be if such a plant were built and operated in the United States.

—Interestingly, the capital cost they acknowledge for the existing French plants is higher than the estimates used in our 2003 study;[49] had they taken this actual experience as the basis for estimating future costs, they would have found reprocessing and MOX prices higher than those used in our study, not lower.

—BCG also makes dubious assumptions about the disposal and management costs of different types of nuclear waste. They argue that because of the lower long-term heat generation from reprocessing waste, compared to spent fuel, four times as much reprocessing waste could be placed in each unit area of the repository, and therefore they assume that total per-kilogram disposal costs would be only one-quarter as large.[50] As we noted in our 2003 study, however, only a portion of total disposal costs are likely to be driven by heat and repository capacity; with a four-fold repository expansion, a two-fold reduction in cost per kilogram is more appropriate.[51] At the same time as they take a four-fold cost reduction for the lower heat generation from reprocessing wastes, they assume that the management cost for spent MOX fuel would be the same as for spent LEU fuel, despite the far higher heat generation of spent MOX fuel, the greater difficulty in reprocessing it, and the much more radioactive nature of the fuel that would be manufactured from it.[52] They acknowledge that disposing of the MOX spent fuel in the repository would effectively eliminate the repository benefit of the entire effort, because of the very high heat generation of the MOX; managing the spent MOX would require fast reactors and other technologies not included in their study.[53]

—In 1996, in the National Academy of Sciences (NAS) review of recycling and transmutation technologies, the NAS committee criticized paper estimates that predicted similarly low costs per kilogram for reprocessing, and concluded that the actual costs of real plants "provide the most reliable basis for estimating the costs of future plants."[54] BCG appears to have ignored this advice.

---

[47] BCG, "Economic Assessment of Used Nuclear Fuel Management in the United States", p. 16.

[48] BCG, "Economic Assessment of Used Nuclear Fuel Management in the United States", p. 52.

[49] Based on published data, we envisioned a reprocessing plant that cost some $6 billion and a MOX plant with a capital cost of roughly $540 million; for two such reprocessing plants and a MOX plant, the total capital cost would then be in the range of $12.5 billion. The BCG study reports that the real capital cost of the two reprocessing plants in France (with official capacities identical to the one we considered) and the MOX plant in France (with an official capacity only modestly higher than the plant we considered) was in fact $17.8 billion, a substantially higher figure than those we used. BCG, "Economic Assessment of Used Nuclear Fuel Management in the United States", p. 16.

[50] BCG, "Economic Assessment of Used Nuclear Fuel Management in the United States", p. 18.

[51] Bunn, Fetter, Holdren, and van der Zwaan, "The Economics of Reprocessing", pp. 34–45.

[52] BCG, "Economic Assessment of Used Nuclear Fuel Management in the United States", p. 20.

[53] BCG, "Economic Assessment of Used Nuclear Fuel Management in the United States", p. 20.

[54] Committee on Separations Technology and Transmutation Systems, "Nuclear Wastes: Technologies for Separations and Transmutation", p. 421.

GOVERNMENT FINANCING AND THE GOVERNMENT'S ROLE IN THE FUEL INDUSTRY

BCG also assumes that the plants they envision will be financed entirely by the government, at a 3 percent real rate of return. This assumption is crucial to their conclusions, as the costs of such a capital-intensive facility would increase dramatically if a higher (and more realistic) rate were chosen. As we noted in our 2003 study, if a reprocessing plant were built that had the same capital and operating costs and nameplate capacity as Britain's Thermal Oxide Reprocessing Plant (THORP), whose costs are generally similar to those of the French plants at La Hague, which are the basis for the BCG estimates, and the plant were financed at such a government rate, it would have a reprocessing cost in the range of $1,350 per kilogram of heavy metal in spent fuel (kgHM), if it successfully operated at its full capacity throughout its life with no interruptions (a far cry from the real experience, but the same assumption used in the BCG study). (By contrast, as already noted, BCG assumes $630/kgHM for both reprocessing and MOX fabrication combined.) But if the exact same plant were financed privately, at the rates the Electric Power Research Institute recommends assuming for power plants owned by regulated utilities with a guaranteed rate of return (and therefore very low-risk), the unit cost would be over $2,000/kgHM. If financed by a fully private entity with no guaranteed rate of return, the cost for the same facility would be over $3,100/kgHM.[55] (That is without taking into account the large-risk premium the capital markets would surely demand for a facility whose fate was so dependent on political decisions; all three of the commercial reprocessing plants built to date in the United States failed for such reasons.)

The entire approach, in short, is only financially feasible if it is fully government-financed. But for the government to own and operate a facility that would not only reprocess spent fuel but manufacture new MOX fuel on the scale they envision—providing a significant fraction of all the fuel for U.S. light-water reactors—would represent an immense government intrusion on the private nuclear fuel industry. The implications of such an approach have not been examined. The coal industry and the gas industry would surely ask, "if nuclear can get facilities to handle its waste financed at a 3 percent government rate, why can't we get the same thing for our environmental controls or carbon sequestration?"

CONCLUSION

The real costs achieved at real facilities provide the best guide to likely future costs of reprocessing and recycling in the United States. These costs are far higher than those assumed in the BCG study for an integrated U.S. plant. Policies should not be based on assuming that costs comparable to those in the BCG study are likely to be achieved in the real world.

Senator DOMENICI. Thank you very much. I know that there are those at the table who would like to take some time disagreeing with you.

Mr. BUNN. I'm sure that's correct.

Senator DOMENICI. I'm hopeful that everybody would recognize that there's not been an editing with his views and others at the table or in my current years as the chairman, to the extent that I've been able to arrive at some conclusions. I don't see eye-to-eye with the imminent Dr. Bunn. I think we will be right back where we've been and mainly we'll get nothing done in this area. Having said that we're going to move to Mr. Fletcher and then we're going to go to questions. Please proceed.

STATEMENT OF KELLY FLETCHER, GE GLOBAL RESEARCH, SUSTAINABLE ENERGY ADVANCED TECHNOLOGY LEADER

Mr. FLETCHER. Thank you Mr. Chairman. I'll be brief in my remarks so we can continue that discussion with Mr. Bunn.

Chairman Domenici, Mr. Bennett, it is a pleasure to be here to discuss General Electric Company's potential contribution to the Global Nuclear Energy Partnership, with the Power Reactor Inno-

[55] Bunn, Fetter, Holdren, and van der Zwaan, "The Economics of Reprocessing", pp. 26–34.

vative Small Module, or PRISM Reactor Technology. In my previous role as GE's General Manager of Nuclear Technology, I had the opportunity to establish the foundation for utilizing this fast reactor technology. My testimony will provide a detailed summary of this technology and its potential role in meeting the objectives of GNEP.

GE is especially interested in GNEP because it provides the policy framework for solving two of the more serious challenges impacting the nuclear industry today: Waste and proliferation. The advanced recycling center concept, put forth in our response to Department of Energy's requests, proposes our integrated solution-based approach.

Today, I've been asked to focus my remarks on the advanced reactor GE has developed, PRISM. In 1984, DOE began the Advanced Liquid Metal Reactor Program. GE led seven industry partners to refine the conceptual design of the PRISM Reactor. The program was funded through 1994. Two products emerged from the expenditure of approximately $100 million in funding. The PRISM Reactor design, and the proliferation resistant PYRO process for spent fuel recycle.

Following the discontinuation of the program, GE continued to develop a more advanced modular fast reactor design called SuperPRISM or SPRISM. The SPRISM design improved the commercial potential of PRISM through increased power output and reduced costs. These improvements enabled an estimated capital cost of a SuperPRISM to be $1,335 per kilowatt electric in 1998 dollars. PRISM is an advanced fast neutron spectrum, reactor plant design with passive reactor shut down, passive shut down heat removal, and passive reactor cavity cooling. PRISM supports a sustainable and flexible fuel cycle to consume transuranic elements within the fuel as it generates electricity. The essence of the reactor technology is a reactor core, housed within a stainless steel vessel. Liquid sodium is circulated within the reactor vessel and through the reactor core by four electromagnetic pumps suspended from the reactor closure. Two intermediate heat exchangers inside the reactor vessel remove heat for electrical generation.

Reports delivered to the government during the advanced metal reactor program, by the National Laboratories and the GE-led team, document this technology. The nuclear regulatory commission issued a report, NR–1368, titled, "A Preapplication Safety Evaluation Report for the PRISM Liquid Metal Reactor", dated February 1994, that stated, and I quote, "The staff with the advisory committee on reactor safeguards in agreement concludes that no obvious impediments to licensing the PRISM design have been identified."

GE has the infrastructure and the processes to build the PRISM reactor with a "Made in America" stamp. PRISM can be deployed now on a commercial scale, generating a return on its investment by putting electricity on the grid, using GE's state-of-the-art management tools. We have proven this in our deployment of the advanced boiling water reactor abroad and GE hopes to continue this tradition with the deployment of both ABWR and ESBWR in the United States in the near term.

PREPARED STATEMENT

Our Nation has already made much of the necessary investment in facilities, analysis, research, and experimentation on the design and development of fast reactors, now called the Advanced Burner Reactor. The National Laboratories has amassed extensive documentation and proof of the PRISM concept, its safety, and its viability. We should take advantage of this wealth of knowledge and expertise and move ahead with this available technology to deploy a commercial scale advanced burner reactor. If we do so, we reduce the need for additional geologic storage capacity. GNEP provides a unique opportunity to regain the historical U.S. leadership position in nuclear science and technology.

Thank you for the time before this committee; this concludes my formal statement.

[The statement follows:]

PREPARED STATEMENT OF KELLY FLETCHER

Mr. Chairman, Senator Reid, and members of the committee, it is a pleasure to be here today to discuss General Electric Company's potential contribution to the Global Nuclear Energy Partnership (GNEP) program with the Power Reactor Innovative Small Module or "PRISM" reactor technology. In my previous role as GE's General Manager of Nuclear Technology, I had the opportunity to establish the foundation for utilizing this fast reactor technology. My testimony will provide a detailed summary of this technology and its potential role in meeting the objectives of the GNEP program.

This is a significant period for our country as we advance into a possible nuclear energy renaissance. GE supports the GNEP concept and is very interested in working with this committee and the Department of Energy to realize the goals of GNEP. In so doing, we can make real and significant contributions to U.S. and international energy security needs. GE is especially interested in GNEP because it provides the policy framework for solving two of the more serious challenges impacting the nuclear industry today: waste and proliferation. The Advanced Recycling Center concept put forth in our response to the Department of Energy's request for Expressions of Interest for the Advanced Burner Reactor (ABR) and the Consolidated Fuel Treatment Center (CFTC) proposes our solution-based approach.

The Department of Energy has developed a broad implementation strategy for GNEP comprised of seven key elements. GE sees these elements grouped into two broad categories: technical and programmatic.

GNEP Technical Elements:

—Demonstrate proliferation-resistant recycling;
—Develop advanced burner reactors;
—Demonstrate small-scale reactors;
—Minimize nuclear waste.

GNEP Programmatic Elements:

—Expand the use of nuclear power;
—Develop enhanced nuclear safeguards;
—Establish reliable fuel services.

While demonstration of proliferation-resistant fuel recycling is the crux of GNEP, we believe the first three technical elements can be best accomplished through a partnership between private industry and the government. The fourth follows with success in advancing the fuel cycle and ABR deployment. Accomplishment of the GNEP technical elements will "pull" the programmatic elements to success.

I have been asked to focus my remarks on the advanced reactor GE has developed—PRISM. That PRISM technology directly supports two key technical elements critical to GNEP success:

—Demonstrate an advanced burner reactor, and
—Demonstrate a small-scale reactor.

The PRISM can provide the energy to generate electricity while "burning" spent fuel from our Nation's 103 operating light water reactors (LWR) as well as future LWRs. Because of its relative small size and its inherently safe encapsulated design, PRISM can be factory built and transported to the site.

To assist the committee in fully understanding this technology, my testimony will cover three areas:

—A historical overview of the origins of PRISM;
—The PRISM technology itself, developed with the support of funding provided by the committee; and,
—A PRISM (or SuperPRISM) deployment roadmap for the committee's consideration.

HISTORICAL OVERVIEW

A preliminary safety information document referencing the PRISM design was released by the U.S. Nuclear Regulatory Commission (NRC) in February 1994. NUREG–1368 noted that ". . . the staff, with the [Advisory Committee on Reactor Safeguards] in agreement, concludes that no obvious impediments to licensing the PRISM ([Advanced Liquid Metal Reactor]) design have been identified."

In the early 1980's, the Liquid Metal Fast Breeder Reactor program focused on deployment of the Clinch River Breeder Reactor (CRBR) in Tennessee. The program encountered difficulties because of cost escalations and schedule delays. The LMR program faced challenges because uranium was not becoming scarce and prohibitively expensive as earlier had been predicted.

While the CRBR project was being debated, a small group at GE's Advanced Reactors program pursued a technology other than large loop sodium reactors. At the time, the 1,000 MWt CRBR was envisioned as the stepping-stone to 3,000 MWt "commercial" plants—the scale thought necessary to be economically competitive with the large light water reactors. GE questioned the economics of large fast reactors, and conducted internal work based on alternative small modular reactor. This small reactor, with rated power in the range of 400 to 1,000 MWt could provide stair step plant power levels by adding reactor modules at a site to reach economic and power generation goals. This was the genesis of GE's Power Reactor Innovative Small Module—PRISM.

In August 1981, representatives from the Argonne National Laboratory's Special Project Office visited the Advanced Reactor team. We explained the idea that our relatively small PRISM reactor vessel could be transported to a refueling center about every 18 months. ANL explained their in-core refueling machine process for the Experimental Breeder Reactor II. It became apparent that rather than moving an entire reactor, technology was available to move just the fuel. From this synergistic meeting with the national laboratory, the concept of PRISM matured.

When Congress terminated the CRBR project in 1983, DOE began the Advanced Liquid Metal Reactor program. The goal of the ALMR program was to increase the efficiency of uranium usage by breeding plutonium and create the condition wherein transuranic isotopes would never leave the site. The ALMR was designed to allow any transuranic isotope to be consumed as fuel, and is the forerunner to the GNEP framework we have today.

GE competed for leadership of the ALMR program against another fast reactor technology. GE won the competition and joined the ALMR program with its two key elements: reactor design and fuel cycle development. GE led seven industry partners to refine the conceptual design of the PRISM reactor. The national laboratories, led principally by ANL, tackled the fuel cycle development and waste characterization with 80 percent of the ALMR funding.

The ALMR program was funded from 1984 to 1994. Two products emerged from the expenditure of approximately $100 million in government funds: the advanced conceptual PRISM reactor design and the highly proliferation resistant pyroprocess for spent fuel recycle. At the point at which the ALMR program was terminated, the PRISM design was less than 5 years from construction contracting. Figure 1 shows the typical power plant site design developed as a part of the ALMR program.

Figure 1: Typical Advanced Liquid Metal Reactor Power Plant Site Layout

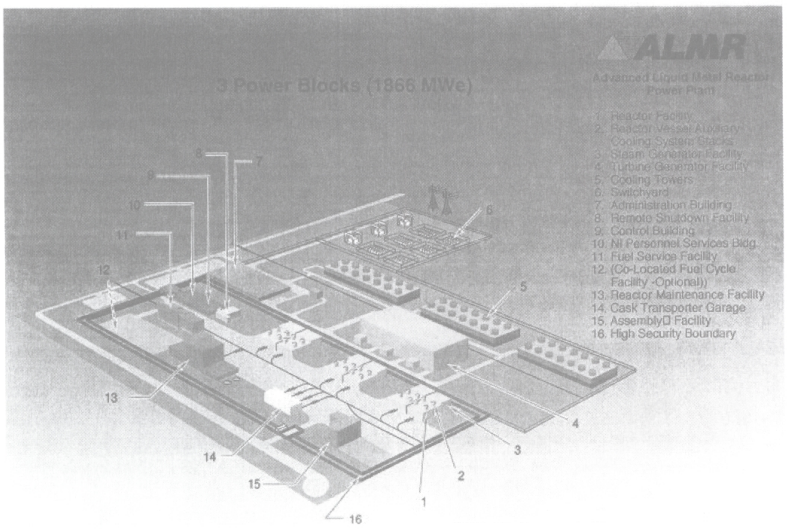

A major outcome from this early work on PRISM, focused on safety and economics, was the possibility of deploying a small reactor competitive with large light water reactors. The PRISM designers evaluated light water reactor systems such as defense in depth, active intervention system, and active emergency backups, and developed a passive, inherently safe design that did not depend upon control rods to SCRAM (immediate shut down of the reactor), back up emergency systems, etc.

The passive safety philosophy developed with PRISM has been transferred to advanced light water reactor designs. DOE designates these reactor designs as GENERATION III+. At GE, we call ours the ESBWR. For example GE's ESBWR relies on gravity for both core and containment cooling, therefore providing passive safety.

Following the discontinuation of DOE's ALMR program, GE continued to develop a more advanced modular fast reactor design called SuperPRISM, or SPRISM. The thermal rating of each reactor module was increased to 1,000 MWt from the PRISM's original 840 MWt. The SuperPRISM design sought to further improve upon the commercial potential of PRISM with:

—increased power output;
—compact reactor building on single seismically isolated base pad;
—multi-cell containment system; and
—improved steam cycle efficiency.

These improvements enabled an estimated capital cost of $1,335/kWe, with a busbar cost of 29.0 mills/KWh for the two-power-block plant with a net plant output of 1520 MWe (capital cost and busbar cost in 1998 dollars).

This history demonstrates that the national laboratories and private industry learned a great deal from the Clinch River Breeder Reactor project and the follow-on Advanced Liquid Metal Reactor project. GE was privileged to lead a very talented industrial team.

PRISM is an important technology that America has already largely developed. I will now describe the details of the technology.

PRISM TECHNOLOGY

PRISM is an advanced fast neutron spectrum reactor plant design with passive reactor shutdown, passive shutdown heat removal, and passive reactor cavity cooling. PRISM supports a sustainable and flexible fuel cycle to consume transuranic elements within the fuel as it generates electricity. The essence of the reactor technology is a reactor core housed within a 316 stainless steel reactor vessel. Liquid sodium is circulated within the reactor vessel and through the reactor core by four electromagnetic pumps suspended from the reactor closure head. Two intermediate

heat exchangers (IHX) inside the reactor vessel remove heat for electrical generation.

The PRISM technology is deployed as a power block with two reactors side by side supporting a single steam turbine generator set. The plant is divided into two areas: the nuclear island (reactors through steam generators) and balance of plant (steam turbine to generate electricity). The nuclear island is two reactors in separate containments, plus steam generators, and shared services, in a single, seismically isolated, partially buried building as depicted in the cutaway view of a PRISM nuclear island shown in Figure 2. Each reactor heats an intermediate coolant loop, sending heat to a steam generator. Steam from the steam generators is combined and sent to the balance of plant, where a single turbine generator produces electricity. Figure 3 shows the overall PRISM power train that converts transuranics into electricity.

I will now provide some additional details of the components that make up the power block.

Figure 2: Cutaway view of a PRISM nuclear island

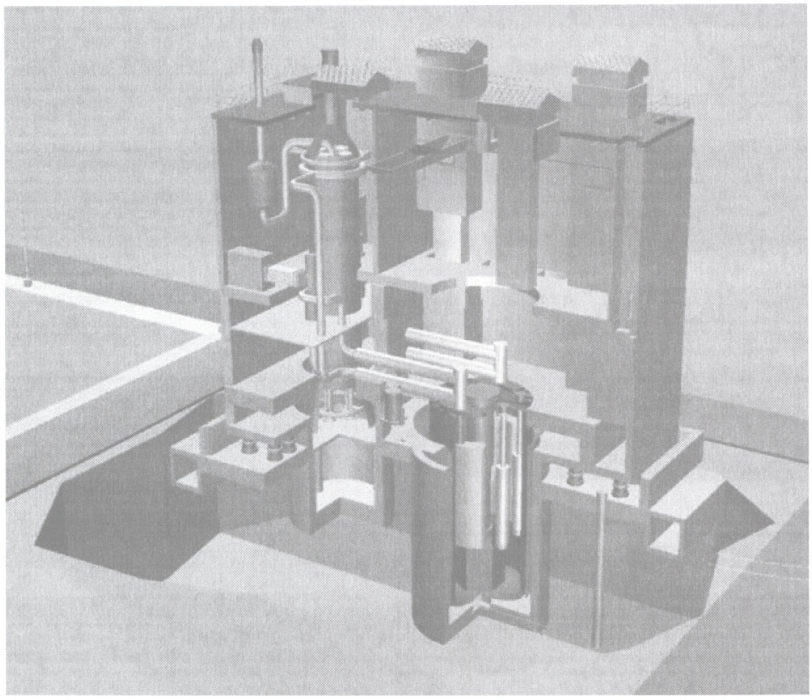

Figure 3: PRISM Power Train

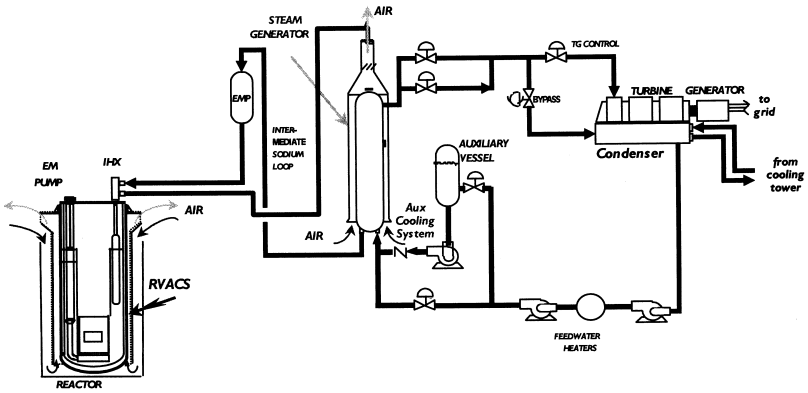

Reactor Core

GE's extensive fuel cycle evaluations indicate a preference for metal fuel. This fuel type best consumes transuranics, recycles spent nuclear fuel and destroys weapons grade material. The reactor core, however, can use either a metal fuel or an oxide-based fuel without changes to the reactor structure or refueling system.

As noted in the history described above, PRISM core power can range from ~800 to 1,000 MWt. Metal fuel bundles allow a higher heavy metal fraction in the fuel resulting in a lower fissile enrichment and better internal transmutation compared to oxide fuel. Thus, the metal fuel core could satisfy nuclear goals with fewer fuel assemblies and a more compact core. The fission gas plenum is located above the fuel column. Upper axial shielding is provided by the long fission gas plenum region and the sodium pool above the core. Lower axial shielding is provided by long pin end plugs. Reflector assemblies contain pin bundles of solid HT9 rods.

Intermediate Heat Transport System (IHTS)

The IHTS is located within the reactor vessel. The internal electromagnetic pumps (EMP)—pumps with no moving parts that move conductive fluids by way of a magnetic field—circulate the molten sodium through the reactor core and then to the IHTS. Another sodium loop, a closed loop system, transports the reactor generated heat to the steam generator (SG) system by circulating non-radioactive sodium between the Intermediate Heat Exchangers (IHX) and the SG. The hot leg sodium is transported in pipes from the two IHXs to a single SG. Two high temperature EMPs in the cold legs return the sodium to the IHX units at ~350° C. The high temperature secondary EMPs are similar to the ones used inside the reactor core.

Steam Generator (SG) System

The steam generator (SG) system is comprised of the startup recirculation tank/pump, leak detection subsystem, steam generator isolation valves, sodium dump tank, and the steam generator. The SG provides a high integrity pressure boundary to assure separation between the sodium and water/steam. The SG is a vertically-oriented, helical coil, sodium-to-water counter flow shell-and-tube heat exchanger. This basic design was developed over 15 years in the ALMR program. Further, a 76 MWt prototype SG was fabricated and tested at the DOE Energy Technology Engineering Center for 4 years. Based on this development work, testing, and GE trade studies, this design was selected as the reference design for SPRISM. This SG design also provides passive protection from the effects of a significant sodium/water reaction.

Functionally the steam generator operates as follows. Water enters the steam generator through four non-radial inlet nozzles at the bottom. Water is heated as it flows upward through the inlet tubes, helical coil tube bundle, and the outlet tubes connecting the tube bundle to four outlet nozzles sending steam to the turbine. The helical coil design features a longer tube length resulting in fewer tubes. Hot sodium enters the steam generator through a single inlet nozzle at the top. The sodium is distributed uniformly and flows downward around the helical coil bundle at low velocity, which provides a large design margin against flow-induced vibrations.

The system detects any water-to-sodium leaks in the SG and can identify the approximate size of the leak. The steam side isolation valves and the sodium blowdown tank rapidly separate water/steam and sodium—stopping the reaction. Gas backfilling prevents backflow of sodium. If this system fails, an innovative design feature using the gas space inside the SG and rupture disks provide increased steam venting capability to prevent steam from being forced backward into the sodium flow.

This helical coil steam generator design provides high reliability, availability, and safety.

Reactor Vessel Auxiliary Cooling System (RVACS)

The Reactor Vessel Auxiliary Cooling System (RVACS) provides ultimate passive cooling for the reactor if all other methods are unavailable. It is always "on" since it utilizes natural circulation of sodium and air, constantly removing a small amount of heat (<0.5 MWt) from the reactor modules. Radiant heat transfer is employed to transfer heat from the reactor vessel, through the containment vessel, and then to the naturally circulating air.

When RVACS is required for decay heat removal, natural circulation of primary sodium carries heat from the core to the reactor vessel. As the temperature of the reactor sodium and reactor vessel automatically rise, the radiant heat transfer across the argon gap to the containment vessel increases to accommodate the heat load. With the increase in containment vessel temperature, the heat transfer from the containment vessel to the atmospheric air surrounding the containment vessel increases.

The inherent safety features are the circulation patterns, which follow the basic laws of physics. They are constant, and the natural airflow can be easily confirmed, which gives us transparent safety.

Containment

The containment system envisioned for PRISM would use three successive barriers—fuel cladding, primary coolant boundary (reactor vessel cutaway view shown in Figure 4), and a containment boundary that surrounds the reactor vessel—to provide defense-in-depth from postulated releases from the reactor vessel. The containment boundary is a steel lined concrete upper structure that encloses the reactor module as shown in Figure 2. Controlled venting from the containment region above one of the reactors in the power block into a service cell (between each reactor of the power block) would relieve the containment boundary system pressure. If necessary the service cell can vent into the reactor containment boundary of the other unit(s) in the power block. This multi-cell approach reduces containment system expense while improving safety.

What is unique about the PRISM reactor is that the reactor vessel is positioned below grade in a concrete silo—a fourth containment boundary (Figure 2). In the beyond credible event of containment breach, the sodium complies with the natural law of gravity and is contained in the silo. Its relatively simple construction process also reduces cost.

The PRISM reactor design benefits from testing of prototype steam generators and electromagnetic pump at DOE's Energy Technology and Engineering Center. The reactor vessel design and material selection benefit from the standards and testing conducted during the Clinch River Breeder Reactor Program. A Probabilistic Risk Assessment (PRA) was completed as part of the design evaluation to ensure its reliability and public safety. The PRA meets the NRC safety goals for core damage frequency, includes potential design improvements, and developed baseline fault models for future use by the NRC.

This body of component testing, advanced design, and safety philosophy mitigates technical risk if PRISM is deployed for GNEP's ABR.

Figure 4: Cutaway view of a PRISM reactor vessel

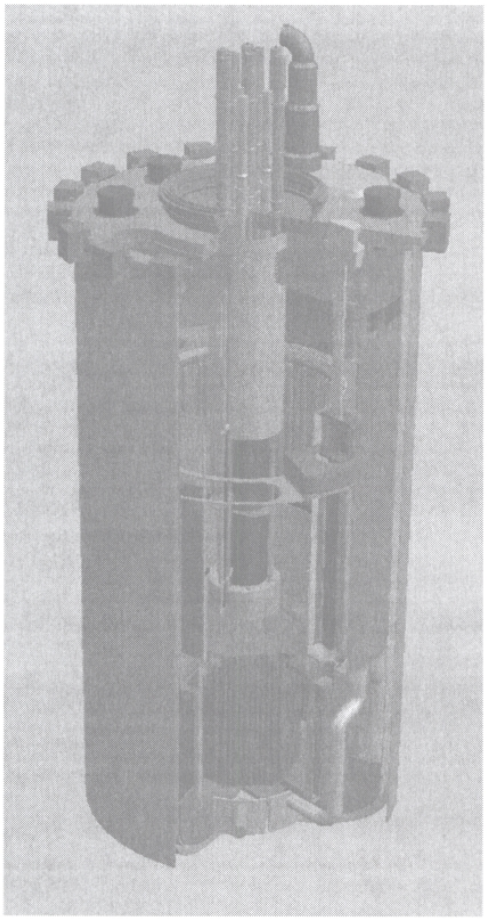

PRISM TECHNOLOGY FOR THE FUTURE

We stand today at a major energy policy juncture. As Deputy Secretary of Energy Clay Sell stated before the committee in March, "[GNEP] is a comprehensive strategy that would lay the foundation for expanded use of nuclear energy in the United States and the world by demonstrating and deploying new technologies that recycle nuclear fuel, significantly reduce waste, and address proliferation concerns."

GNEP's underlying principal is that LWR spent nuclear fuel is an asset to be managed using fast reactor technology. PRISM technology is synergistic in this respect because it consumes transuranics produced by our current fleet of LWRs. During that consumption, electricity is produced. GE believes PRISM is the fast reactor technology to best manage this spent nuclear fuel asset.

GNEP is about deployment of a nuclear reactor with a different coolant. This coolant, sodium, allows different reactor performance characteristics, beneficial for the

intended mission. At this point, the key issues in deployment of this new technology are related to design, codes, and standards. If the government chooses to deploy a PRISM reactor to achieve the goals of GNEP, the work that remains is really about nuts and bolts project engineering and management—the technology is ready to be deployed. GE is ready to leverage our commercial expertise in reactor plant design and construction to support deployment of a PRISM reactor as part of GNEP.

GE has experience in taking government research results from the Nuclear Reactor Testing Station, Idaho—the BORAX reactors—and developing and commercializing the Boiling Water Reactor from initial reactor tests. This technology commercialization was accomplished with public-private partnerships. Today's PRISM technology deployment requires the same working partnership. With expanding demand for domestically produced non-carbon emitting energy, and the fuel supply—spent nuclear fuel—tied to government ownership, only a public-private partnership can make GNEP happen.

In 1965 GE started the SEFOR (Southwest Experimental Fast Oxide Reactor) project in Arkansas to develop first-hand design, construction, and operational experience for a commercial-scale liquid metal reactor. A remarkable aspect of SEFOR was that the total 8-year program was described in detail in the initial contract and, except for minor variations, was carried out exactly as planned. Contrast the successful SEFOR project to the Clinch River Breeder Reactor project.

The success of SEFOR provides an important lesson. At GE we are proud of our past contributions to fast reactor development in this country. PRISM technology has been extensively researched using both Federal and private industry funding. A wealth of documentation and expertise is available from the national laboratories and industry. GE has the infrastructure and the processes to build the PRISM with a "Made in America" stamp. PRISM can be deployed now on a commercial scale—generating revenue by putting electricity on the grid—using GE's state-of-the-art management tools. We have proven this in our deployment of ABWR abroad, and GE hopes to continue this tradition with the deployment of both ABWR and ESBWR in the United States in the near term.

Records and Documentation

"Prototype Plan" (GEFR–0933) December 1993—one of many documents delivered to the government in the early 1990's—presented what looks very similar to the current GNEP "plan." It proposed a system with three subsystems—reactor power plant, fuel recycle facilities, and the LWR actinide recycle facilities. The estimated cost for the reactor subsystem and safety testing was estimated then at $1.6 billion. This estimate accounted for the difference between the standard plant and the prototype, which must support running the safety tests and fuel testing until NRC certification is granted.

The NRC licensing approach defined in "Licensing Approach" (GEFR–00842, UC–87Ta) presents a process and schedule for achieving standard design certification. The "Certification Test Plan" (GEFR–0808[DR], UC–87Ta) identifies all testing needed for the design certification. "1993 Capital and Bus Bar Cost Estimates" (GEFR–0915, UC–87Ta) provides a bottom-up capital cost and bus bar estimate. As part of these earlier efforts, GE delivered documents on exactly how to fabricate the reactor vessel, test fuel, build steam generators, etc. As I stated before, NUREG–1368, Preapplication Safety Evaluation Report for the Power Reactor Innovative Small Module (PRISM) Liquid Metal Reactor, Final Report, February 1994, stated that, ". . . the staff, with the ACRS in agreement, concludes that no obvious impediments to licensing the PRISM (ALMR) design have been identified."

The confluence of GE processes and project management with this wealth of ALMR documentation (requiring relatively little updating) provides significant input for a systematic path forward for GNEP.

Reactor Fuel Qualification

We recognize the need to perform rigorous qualification of the new fuel forms available for PRISM. We recommend establishing a "Fuel Team" to provide integration between GE and DOE's national laboratories to develop technologies to separate and fabricate fast reactor transmutation fuel. This team approach will insure qualifying transuranic fuel that meets the project schedule, and is both cost-effective and reliable. In order make a cost-effective and reliable driver fuel, GE believes it should be based on the U-Zr or the U-Pu-Zr fuel used at EBR–II, because of the considerable operational experience.

The prototype PRISM reactor would incorporate more instrumentation than would be employed in subsequent commercial units in order to measure fuel temperature and flux in support of the fuel qualification program. Both DOE's national laboratories and GE could conduct the fuel examinations.

The PRISM reactor is the best vehicle for fuel qualification since it has more in-core positions for fuel testing and operates that fuel at prototypical conditions.

Resources Required for Public-Private Partnership

Two areas deserve consideration by this committee to assure success of GNEP:

—A multi-year funding commitment for reactor construction to mitigate cost risk, consistent with other DOE energy programs.

—Access by the GNEP prime contractor to information developed by the national laboratories applicable to PRISM. Some examples are:

  —Heat transfer correlations for Reactor Vessel Auxiliary Heat Removal System water simulations tests for confirming the in-reactor sodium flow paths to expedite validation simulations using new CFD codes.

  —Electromagnetic pump electrical insulation material testing data to finalize pump design.

  —Post-test evaluations of the seismic isolation bearings to support the detailed design process for the seismic isolation system.

  —Support to recover the EM pump at the Energy Technology Engineering Center.

—The total R&D cost for the PRISM development was estimated to be $300 million in 1998. Some examples of this R&D identified in NUREG–1368 are:

  —*Seismic Isolation*.—The PRISM design uses seismic isolation bearings. The response of buildings with these installed bearings is needed to support ABR seismic code validation. International cooperation with France and Japan, which also have used this seismic isolation design, can provide additional empirical data.

  —*Fuel System*.—TRU metal-fuel development, supported by in-reactor and ex-reactor experiments.

  —*Thermal Hydraulics*.—New analytical tools will be developed for core thermal hydraulics.

  —*Heat Exchanger*.—Evaluation of the Intermediate Heat Exchanger System gimbaled joints.

SUMMARY

Our Nation has already made much of the necessary investment in facilities, analysis, study, research and experimentation on the design and deployment of fast reactors (now called the Advanced Burner Reactor). The national laboratories have amassed extensive documentation and proof of the PRISM concept, its safety, and its viability. We should take advantage of that wealth of knowledge and expertise, and move ahead with this available technology to deploy a commercial scale advanced burner reactor, the PRISM. Importantly, in contrast to current reactors that require outsourcing of components because of their size, the key elements of PRISM small module reactor technology—including the reactor vessel, the steam generator and the steam turbine—are capable of being fabricated domestically. As the last U.S. publicly owned reactor vendor, GE is ready, if tasked by our government, to move forward.

In his testimony before the committee this spring, Deputy Secretary Sell succinctly defined our Nation's status on nuclear energy and the potential for PRISM technology:

". . . nuclear energy by itself is not a silver bullet for energy supply, in the world or for the U.S. and we need all technologies to address the anticipated growth in demand for energy. Regardless of the steps the U.S. takes, nuclear energy is expected to continue to expand around the globe.

"We can continue down the same path that we have been on for the last thirty years or we can lead a transformation to a new, safer, and more secure approach to nuclear energy, an approach that brings the benefits of nuclear energy to the world while reducing vulnerabilities from proliferation and nuclear waste. We are in a much stronger position to shape the nuclear future if we are part of it and hence, GNEP. GNEP is a program that looks at the energy challenges of today and tomorrow and envisions a safer and more secure future, encouraging cooperation between nations to permit peaceful expansion of nuclear technology while helping to address the challenges of energy supply, proliferation, and global climate change."

PRISM is a technology that can close the nuclear fuel cycle using the energy contained in our Nation's spent nuclear fuel. PRISM can generate stable base load electricity to help meet our growing electricity needs and enhance our energy security. As we do so, we reduce the need for additional geologic storage capacity. GNEP provides a unique opportunity to regain the historical U.S. leadership position in nuclear science and technology.

Thank you. This concludes my formal statement. I would be pleased to answer any questions you may have at this time.

Senator DOMENICI. Thank you very much.

Well, I have a series of questions and I'll get them started, and where they'll lead, I don't know. I know Assistant Secretary Spurgeon and Dr. Hanson would probably like to comment on the record; there's some areas where you disagree with Mr. Bunn's testimony. Is that a fair estimate of where we are? I don't quite know how to get that done in an hour and a half and be fair with it, but I'm going to start with a couple.

ADVANCED REACTORS PROGRAM

Advanced reactors—can we talk about that for just a minute? In his paper, "Assessing the Benefits, Costs and Risks of Near Term Reprocessing and Alternatives," Mr. Bunn states that the Department's schedule for design, construction and licensing of a prototype advance reactor is, he uses a nice word, absurd. Do you agree with Mr. Bunn's characterization of the Advanced Reactor Program, and if you do, why? And if you don't, why not? Assistant Secretary Spurgeon and then Dr. Hanson.

Mr. SPURGEON. Well, I certainly hope that we have not—nor would we at any point in time—propose something that would be "absurd", sir. However, the precise schedule is not laid out for the operation of an advanced reactor. We do recognize that there is research and development that needs to be done, and that is being proposed, especially when it comes to the ability of an advanced reactor to burn fuel containing minor actinides. That kind of fuel has not been qualified yet, that is the subject of our major R&D program that we are proposing to carry out.

However, I think on the worldwide scale, we must look at what other countries are doing, and what they have accomplished. India is scheduled to put a fairly substantial fast reactor online in 2010. France has announced a next generation, or a next fast reactor to go online in 2020. We're looking at Japan that has one in operation, and another that is now shut down, but is planned to go back in operation quite shortly, and the United States put a great deal of effort, including what was just described here by General Electric, in research and development into fast reactor programs. We did—we have operated fast reactors in this country—going back to the first electricity ever generated in this country, it was 1950 or 1951 with a fast reactor. EBR–II following that, FFTF following that. Clinch River—although it was cancelled—was a fairly major program in this country, so we're not starting from scratch, nor is this some pipe dream that we're pulling out of the air. We recognize there's much work to do to recycle actinides. But we do not accept that this is something that cannot be done in cooperation with industry and the international community.

Senator DOMENICI. Dr. Hanson?

Dr. HANSON. I would certainly concur with Assistant Secretary Spurgeon's comment that the development of fast reactors and deployment of such a fast reactor or burner is not absurd. However, I would note that in his comments, we are talking about singular cases, and not a large fleet of such reactors. I believe that we can develop a prototype semi-commercial reactor and deploy it in a rea-

sonable time frame, and use that as a test bed to see how well it will work both at burning actinides, and at generating electricity, which may turn out to be conflicting goals for a single reactor. It remains to be seen how well it will do on both functions.

But if we talk about a commercial group of ABRs in the quantities necessary to deal with the output of spent fuel, this is going to take decades because our utility community does not move overnight to produce dozens of reactors. If we look at the nuclear renaissance right now, 2015 is the earliest date that we are projecting for the addition of the first new reactor and it is a minor variation on our existing light water reactor technology.

So, where I would agree with Mr. Bunn, a fleet of such reactors will not be available, I certainly would disagree that we should not move forward on it—we certainly should move forward to develop that prototype as early as possible, because that will lead to the fleet soon, maybe decades later.

Mr. BUNN. Just to defend myself briefly, I never said that building a fast neutron reactor in this country was absurd, what I said was the kinds of schedules that DOE laid out, for example, in the Q&As at the industry briefing, where they envisioned beginning construction in 2010, simply couldn't be plausibly achieved. This is a major change in the kind of reactor that we're building in this country. There's no one at the Nuclear Regulatory Commission that yet has experienced licensing a fast reactor, the notion that we're going to have a license to begin construction in 2010, I think is not very likely, let's put it that way.

Mr. SPURGEON. I'm not aware that we have said we're going to begin construction of a fast reactor in 2010, so——

Mr. BUNN. Look on your website.

Senator DOMENICI. All that comment is about what you can't do is built on the premise that you did not make. I assume that's what you were saying.

SCHEDULE AND COST IMPACTS TO GNEP

We move ahead now to a couple of subjects—GNEP changes impact on schedule and budget—can I talk about that with you for a minute?

Since the introduction of the President's budget which unveiled GNEP, the Department's schedule and vision has evolved from an R&D-intensive program that included developing and engineering a design scale demonstration before moving to a commercial scale facility. The Department unveiled its two-track strategy for GNEP; the first track would be to develop a commercial scale spent fuel recycled facility and advanced burner reactor.

The second path would focus on longer-term R&D to support transmutation fuel, development for the use in the burner reaction. Can you please tell the committee what factors led to change in DOE's position to move forward with the immediate commercial deployment and was it a change in technology? Go ahead.

Mr. SPURGEON. Mr. Chairman, first, the basic strategy that was first implemented is still in place. It was a very R&D-oriented strategy, we do still need that same R&D. We don't have today, nor can we, nor are we in a position to commercialize the actinide-bearing fuel recycle that is envisioned as part of GNEP.

And in the original strategy it was always envisioned that industry would be involved for the commercialization of this technology. What we are really looking at is what is needed between the research and development, and the commercial step, and can we use—in some cases—existing facilities that exist in our national laboratories to do some of the test work, leading to the point where we can get to a commercial-scale facility.

What we are asking industry for, and what they are beginning to provide by the expressions of interest, is where do they think they can help pick us up in that program to get us to that commercial stage? So, I don't view this as a change, I view this as looking at the relative roles in developing any nuclear technology. The government role being the research and development on new technology; the industrial role being the implementation of that technology, and we're trying to see if we can do that in a more cost-effective and schedule-effective way.

Senator DOMENICI. Dr. Hanson, in his testimony Dr. Bunn criticized the economic assumptions of the Boston Consulting Group in estimating the cost to build and operate the recycling facility.

He says the cost of the two smaller facilities in France, which have 50 percent less capacity, will cost the same as the proposed U.S. facility. How do you respond to the criticism that he is thus lodging regarding the economic assumptions? And Mr. Bunn, do you have anything further to add? First, Dr. Hanson.

Dr. HANSON. Thank you. Let me start by saying that I have a good deal of respect for the study that was produced by Harvard in 2003, which Matt Bunn was one of the authors. And I suspect that if the Boston Consulting Group had been given the exact information that was used to produce that report in 2003, they might very well have come up with a similar conclusion.

However, a lot has changed since 2003. More importantly, the Boston Consulting Group is the only group which has ever been given complete access to the commercial, technical, financial and operational data that has been acquired by operating the La Hague and Melox facilities. Based on that data, they produce a grounds-up estimate of what it would cost, in their view, to produce a large recycling plant in the United States. They stand by their number, they are perfectly willing to defend it, and I must say that this is their study, not AREVA's, although we did commission the study, and we facilitated it by providing information.

Now, with the specific criticism with regard to the size of the facility, one of the—it is first of all a misconception—the capacity of the existing La Hague facility is not 1,500. In fact, I can't give you a precise number, because a process facility like this can be pushed well beyond its design capability, what we do know is that the ultimate capacity of those two plants together is in the vicinity of 1,500 to 2,000 metric tons, not 1,500. So this is not a doubling of the capacity in the study.

But very significant is that we are talking in the Boston Consulting Group study about building one facility, instead of two facilities of half the size. And I can tell you that the economies of scale associated from going from two smaller plants to a single one far outweigh the cost disadvantages or additional costs associated with building a larger facility. This is why we built large refineries,

why we build large chemical plants, why the next generation of light water reactors are, in turn, going to be very large. So, that criticism is, I think, a little bit misstated.

Furthermore, there are parts of the facility at La Hague which do not need to be scaled at all. A good example is the receipt and acceptance pools of the plant, which are so large—they are larger than is needed to put maybe 4,000 or 5,000 tons of fuel through the plant. So, there's a significant fraction of the existing facility which does not need to be scaled at all, and therefore there are no additional costs associated with it.

Again, I do not want to be in a situation of dueling studies, I think the study produced—given the data that they had to work with and the time in which it was done—is still a credible study. However, I believe that the BCG study, given the data that they used and today's environment, is just as credible, and probably more so.

Senator DOMENICI. Thank you. Thank you very much.

Mr. BUNN. I think both studies are using essentially the same kinds of mathematics, and actually the data we are looking at is not that different. I think that the key differences have to do with the degree of optimism about the ability to scale up very drastically and the scale of the facility for relatively modest costs, and the likelihood that you will have the huge through put rates and sort of the complete utilization of the facility that they assume. They assume, basically, that the facility will always be operating at close to capacity throughout its life, for birth and MOX fabrication and the reprocessing—they're so confident of that they actually take out having any plutonium storage area, whereas in France, for example, many tens of tons of plutonium have built up in storage as a result of lags in fabrication.

We are left, we believe—as the National Academy of Sciences review concluded—that the most reliable predictors of the cost of future facilities is, in fact, the experience of past facilities, and that's more what we relied on. And, so, I think those assumptions about sort of being able to continuously operate, never having a contract delay and so on and being able to scale up dramatically with relatively modest increases in cost are the key differences between the two studies, fundamentally.

INDUSTRY INVOLVEMENT

Senator DOMENICI. Thank you very much. Mr. Secretary, can I get back——

Mr. SPURGEON. Yes, sir.

Senator DOMENICI [continuing]. I'll make this point.

You changed course here in August—can you once again, discuss with me and for this record here—what's that all about?

Mr. SPURGEON. I prefer not to say "change course", sir.

Senator DOMENICI. What do you want to call it?

Mr. SPURGEON. I prefer to say that we are involving industry and their capabilities perhaps earlier than might have been the case prior to that point in time, because we believe that there are portions of this technology that are ready for industry to pursue. And what I was saying before is, there's definite role here between what should be done by the government and our associated national lab-

oratories and what can then be done by industry. But along the way, perhaps some of that can go in parallel, where the parts that industry can do to get started now, rather than waiting for all of the R&D to be complete before they're involved in a major way. And that's what we're really trying to do, is to work in parallel—that's the focus on, if you recall, two tracks. It's getting industry started with what they can do now, while we're going ahead on the research and development on those areas that we don't have ready for——

Senator DOMENICI. How will this have an impact on the overall schedule—will it?

Mr. SPURGEON. We hope that it will allow the schedule to be done in a more timely—and also, ultimately—a more cost-effective way. Especially, perhaps in limiting the amount of Federal dollars that could be involved.

SUPPORT OF NUCLEAR POWER

Senator DOMENICI. I'm going to stay with you just for a minute longer—I sense in some of that testimony here by Dr. Bunn that he isn't living in the same age I am in reference to support for nuclear power. He's still talking about things like we need support for certain things. Well, I already think the Nation is far ahead of that, there is more support for nuclear power now than we ever thought. The signal in terms of public support is, get on with it. And it's pretty high both for the things we're doing, and everything that we can find out from the public is that they would prefer that we go with nuclear, rather than sit where we have for the last 25 to 30 years.

In your requests for bids, for what you would put out for areas, tell us what kind of responses, generally, and what the feeling appears to be of the areas that are submitting applications to you?

Mr. SPURGEON. Well, I think what we're finding is that there is a willingness on the part—and this is in several regions of the country—to support the idea of locating these fuel cycle facilities in their region. And that's very positive, because as you know for many technologies, and not just nuclear, the idea of "not in my backyard" can be very strong. But we have found a willingness on the part of people to not just say, "Well, if you force us to, we'll take it. But on the contrary, or to the contrary, we would like to have it." And that, I think, is a positive. And understand, the kind of facilities we're talking about—whether it be interim process storage, whether it be the recycling facility, whether it be the burner reactor—are very clean, very non-emitting kind of facilities that can be very good neighbors for these communities.

Senator DOMENICI. Yes, that's true, but in the past the procession of skeptics that proceeded that factual presentation to the areas had already poisoned the mind against these activities, even if they are clean.

Mr. SPURGEON. And I think, as you know, in your State we have just licensed and now construction has started on a fuel cycle facility on the national enrichment facility.

Senator DOMENICI. Yes, it occurred in 30 months.

Mr. SPURGEON. It occurred on time from a licensing standpoint, which I think is a good harbinger for our ability to effectively license new nuclear facilities in a timely way.

Senator DOMENICI. And on the expressions of interest that went out, you got many responses saying, "Come to our area."

Mr. SPURGEON. Yes, we did.

Senator DOMENICI. And some of those had politicians joining, didn't they?

Mr. SPURGEON. That's correct. That's correct, and I think that's very important because where these facilities go, should be to areas that want to have them.

Senator DOMENICI. Now, I've been sitting here all this time and thinking that you would ask me if you wanted to ask questions but I didn't do that, and I'm very apologetic.

Senator ALLARD. Not at all, Mr. Chairman. I've been fascinated by the discussion that you've triggered here. But I would like to ask a few questions.

Senator DOMENICI. Please do.

Senator ALLARD. Good, thank you. And I'll stay out of this fight. I'll let the chairman handle that.

Senator DOMENICI. There is no fight. We have a majority and a minority and this fellow over here whose name begins with a B——

GNEP CHANGE IN SCOPE

Senator BENNETT. Okay, well my name begins with a B.

Senator ALLARD. Secretary, I'm interested in your response to Chairman Domenici's comment about a change in direction and you say no, you're just trying to get more commercial activity involved in this.

Are there commercial alternatives to the laboratory-based recycled processes promoted by the Argonne National, the UREX+ and if so, are they as proliferation resistant as the Argonne process?

Mr. SPURGEON. Well, I think that's something that will be part of the evaluation—yes, there are other technologies, other variants, if you will that have been proposed, but obviously a criteria in the end is that it does offer a degree of proliferation resistance.

But if I may say the whole—I don't want to interrupt you, sir—non-proliferation is a major reason for GNEP. What we are really doing in GNEP is trying to look over the horizon to the day when we do have not just 1 or 2 or 10 or 20 new nuclear plants, but literally hundreds of new nuclear plants operating around the world. And so, how are we going to handle that, what kind of a regime do we need in order for that to be done safely and effectively? And the base of GNEP is to say what you need for new developing countries coming online, and to enable them the benefits of nuclear energy, which they have a right to have—is that there needs to be a regime where they can have a guaranteed fuel supply. This is the fuel leasing idea.

But what fuel leasing requires is that there be an ability to handle that fuel cycle from cradle to grave. You can't just say, "Here's your fresh fuel, and oh, by the way, when the spent fuel comes out, we don't know where you're going to send it." And if the response was simply, "Well, wait a minute, somebody else may take your

spent fuel," well, that's somewhat of a problematic situation, however, maybe there are countries that would do that, by that way.

But, if you have a way of recycling that fuel, removing what you would call the long-lived products, long-lived high actinide products that caused the problem for ultimate emplacement and thereby being able to take that fuel, process it and only give them back something that is not so difficult to deal with from an ultimate waste disposal standpoint you have a way, and that would be in their best interest.

So, you're not, in effect, forcing something on them, you're giving these countries a way to enjoy the benefits of nuclear energy without needing, and without requiring countries to build a complete fuel cycle. They should not even want the kind of fuel cycle facilities that could cause concern from a proliferation standpoint.

May I just say one other thing, we've never had to the best of my knowledge, a light water reactor, a commercial reactor—or a fast reactor, for that matter, a breeder reactor used where the fuel from that plant has been used to proliferate another country's nuclear weapons capability. It's been done in other ways. You don't need a reactor, you don't need a commercial reprocessing facility to get a nuclear weapons capability. So, let's not throw the baby out with the bath water, let's consider what are really proliferation risks, and what are not.

Senator ALLARD. Thank you, that's a helpful explanation. Now, do you prefer government or non-government sites for the GNEP missions? Which would you prefer?

Mr. SPURGEON. We don't have a preference, we're not coming into this with a prejudice for one site versus another, sir.

TECHNICAL CAPABILITY

Senator ALLARD. Okay, now, do you think the technological and intellectual capacity exists in the United States to carry out the cycle initiatives that you've described here? Or do you think we're relying on foreign sources?

Mr. SPURGEON. I wouldn't say foreign sources, it's kind of an international business these days, if you look at the ownership of some of our major nuclear companies today. I mean, General Electric is really the only one now in the reactor business that is totally United States owned. But the gentleman to my left is part of a U.S. subsidiary of AREVA that probably employs more U.S. citizens than perhaps any other nuclear company.

Senator ALLARD. The cycle you've described is far more than just a reactor, from cradle to grave—to use your phrase—you're going to have to have a lot of technologies in there, and do we have the capacity in the United States to provide all of the pieces of that chain?

Mr. SPURGEON. Sir, I think we have all of the bases, but as you know, the nuclear industry in this country over this past—even for conventional reactors—has atrophied. We have lost capability that we need to rebuild. We need to rebuild our infrastructure in the United States for nuclear energy and that's all part of the process. We need to rebuild our human capital to do some of these things because we just haven't ordered a new plant in quite some time—

the last nuclear plant that was ordered that was actually built was 1973. So, it's been a long time.

ESTIMATED TIME FOR START OF PROGRAM

Senator ALLARD. Give me a horse bet guess as to how quickly the United States might be able to start recycling fuel, how quickly could this program you've described come to pass?

Mr. SPURGEON. Schedules are always something that, you know, when you throw them out and horse bet guesses come back to haunt you as you made a firm commitment——

Senator ALLARD. That's why I described it as that up front, to give you as much out as possible.

Mr. SPURGEON. Well, we've always said—and this is dependent on so many things—but we're looking at the 2020-type time frame. That's what we've said maybe is feasible. It can certainly be done, depending on the technology you use, et cetera—things can be started, perhaps, earlier than that, but then when you get to the full-scale actinide recycle, you're looking to perhaps a later time.

When we talk R&D, when you talk the nuclear business, you hear people say "We can afford to wait, you know, we don't need it for 20 years, we don't need it for 30 years." And nuclear R&D and especially when you get to implementation—20 to 30 years from now is today. You start today for things that you want to have online in 2020 and 2030 when they involve basic research.

Senator ALLARD. Mr. Bunn, do you think he's being too optimistic?

Mr. BUNN. Our main concern is that, although Assistant Secretary Spurgeon doesn't see it as a major change that the announcements of August suggest that we're moving to building potentially very large facilities, the expressions of interest—for example, to a 2,000- or 3,000-ton heavy-metal per-year reprocessing plant and fuel fabrication plant and that that inevitably means, if we're going to be focusing on the technologies that are readily available. I don't think there's any way that we could build a 2,000- or 3,000-ton heavy-metal plant today using your UREX+ technology, it's only been demonstrated on a kilogram scale, you would need to have intermediate steps. And so you may have to go, if that's the direction you want to go, to something like what Dr. Hanson is proposing with the COEX process, which is a much more modest variant on what has already been deployed at AREVA's facilities.

But I, myself, am quite concerned about the proliferation impacts of using the COEX process or the PUREX process, and my concern is that the level of effort that's going to be required to build these huge facilities will inevitably take money, personnel and leadership attention away from the long-term R&D. We don't even know yet as Assistant Secretary Sturgeon mentioned, whether we can successfully fabricate the transmutation fuels to transmute the actinides. If we can't do that we're not going to get the kinds of repository benefits that we're looking for. So, it seems to me that we ought to wait until we know what things are most attractive and that we can do those things before we build a big facility and they turn out to be not designed the way we would have liked to have

had them designed if we had done a little bit more R&D before we went ahead and worked on building them.

Senator ALLARD. Just one last question, do you all agree that there is a significant role for commercial enterprise in this program, we should no longer depend entirely on the labs as the primary source of information?

Dr. HANSON. If I could start with that, Mr. Bunn, I want to say that absolutely, we agree with Assistant Secretary Spurgeon's refinement of a strategy in terms of earlier incorporation of commercial enterprise. We have a lot of experience in these industries, and we know how to get things done on budget and on time and so the earlier we believe the commercial enterprise can be brought into what would otherwise be a long-term research and development program, we think that will lead to greater success.

Relative to the previous conversation around moving forward with large-scale untested or unproven processes, I would agree with Mr. Bunn that a step-wise approach is much more appropriate than picking a technology that may offer some of the benefits that we're looking for, but frankly is just an interim solution. The COEX process is not the solution that's going to get us to the long-term proliferation resistance that the country and the globe needs, and embarking on a multi-billion dollar program to deploy that only to have to deploy something that really does meet the requirements of GNEP in the future is not the appropriate approach. So in our expressions of interest, we talked about a way to roll out a prototype process where we can build as we go. We can spend smaller amounts of money, learn as we go, utilize all of the experience that we've gained in the last 15 years and build out in a modular fashion rather than in a large monolithic fashion these technologies so that we can gain the experience that we need, we can qualify the fuel that needs to be done, but do so with equipment and processes which are prototypical of commercial-scale reactors. We need to get this out of the laboratory, but we don't need to build huge monolithic processes.

Senator ALLARD. All right, thank you very much, thank you Mr. Chairman. I want to be on the record with you as being strongly in favor of moving forward in this area, and I want to acknowledge your leadership here, because we've had a log-jam in the Congress for a long time on this issue and your focus on nuclear power and pushing it forward, I think, has broken that log-jam, and it's good to get these experts talking about these kinds of issues instead of being tied up in a basic "yes/no" position which we were in for so long. So, I commend you for that.

Senator DOMENICI. Thank you very much. And let me say, I thank you for coming down here when others see no reason to come down here and spend some time on what I think is going to dawn on everyone around here that it's one of the most important things we've got going. When we present it on the floor, they're going to ask "Where did this come from?" and of course it's just like it's been in the past, it's going to come out of this committee, because this committee's going to spend time on it and then we're going to take it to the floor, and we're going to get it done. So, it's very important people pay attention to what's going on in here and then spend some time. I'm sorry we can't have any more participation

from Senators, but I think they're getting some of it through their staffs——

Mr. ALLARD. I thank you for that comment, but I'm now going to have to leave.

Senator DOMENICI. We're almost finished. I do want to say that I have been assuming you were a Ph.D. and that's a mistake, and to the extent that I might have abused you by calling you "doctor"——

Mr. BUNN. Don't worry, I'm not offended. You may have made the mistake because you and I have been working together on nonproliferation issues for so long, I well remember working with you and your staff on Nunn-Lugar-Domenici back in 1996, and various initiatives since then.

Senator DOMENICI. It seems like forever, doesn't it?

But we did get some things done.

Let me say, I appreciate everybody here and I know we have a problem and it's what do we do about GNEP, and how do we solve nuclear waste storage? And they happen to go together now, more than they ever did before and that's pretty obvious to me, and I'm going to put them as closely together as I can as we move ahead, because we wanted to spend money on GNEP and we don't want to spend money on a single purpose when it can spent for more purposes, just like a businessman from GE saying that's dumb that we focus all of our attention on R&D on one thing when it relates to others and we don't bring the others along with it in some way or another, that we are wasting a lot of time.

But I also don't think we're going to return—I say this openly today—to the era of the 1970's on these issues. That's finished. We messed up by waiting around and not doing something, and now we're behind. We thought we were doing the moral thing and that everybody would follow and not do anything, and they did do—they didn't follow our great example, they went ahead and developed, and we didn't. And we've got to have a solution to waste disposal, we can't sit around and say, "It's just too big." It's not too big for this country to solve this problem. To say it can't be solved is crazy. We have the engineering, the technical, the scientific knowledge and we're just going to have to decide that we're going to take business and put them in, put them in and use them. Before we didn't, but before they weren't in it as much either. They want to be in it because they're in it and the rest of the world, which is the most interesting. It isn't as if they want to get in it to learn, they want to bring their knowledge to us—they're bringing their knowledge to us, which is the strange thing. It's what you just told using your testimony—we didn't come up here with a whole bunch of new inventions. And Dr. Hanson, you already know the answers, because you did them, right? You came here and told us that we already did these things. And, Mr. Secretary, I think I heard you say, "We're going to take and use these things, no matter where they came from", right?

Mr. SPURGEON. Yes, sir.

Senator DOMENICI. And you get on with it.

Now, I don't have the answer to how we're going to get this, get this waste disposal site selected and how we're going to get on with finding one and using it, I just know we're going to do it. And I

know that standing in the way, in a sense, is Yucca—it's a solution and then it's also a problem. If it weren't there and we started from scratch it might be that we'd be ahead of the game. But it's there and so we're going to have to figure out a way to use it but it's not going to be used as quickly and early as people thought. As a repository—it might be used for more research, but we're not going to jump on our white horses and put on some radiation shields and go down there and put the fuel rods in Yucca—that isn't going to happen. It's going to be something else going in there. And we've got to get ready to change those, do the recycling or whatever, so what we're ready to put in there is different. And we are delighted that we've got you, Mr. Secretary, committed for short term, new life—it's what you took—a short term, new life to get this done, right?

Mr. SPURGEON. Yes, sir.

CONCLUSION OF HEARING

Senator DOMENICI. And we want to get it done. Thank you. If you have anything to say that you think would indicate to Senator Domenici is wacky, you're going to have to say it to a closed record.

Because you're not going to have a record open to say it. We're in recess.

[Whereupon, at 11:12 a.m., Thursday, September 14, the hearing was concluded, and the subcommittee was recessed, to reconvene subject to the call of the Chair.]

○