AUTHENTICATED
U.S. GOVERNMENT
INFORMATION
GPO

ROLE OF FAMILY-BASED IMMIGRATION IN THE U.S. IMMIGRATION SYSTEM

HEARING

BEFORE THE

SUBCOMMITTEE ON IMMIGRATION, CITIZENSHIP, REFUGEES, BORDER SECURITY, AND INTERNATIONAL LAW

OF THE

COMMITTEE ON THE JUDICIARY
HOUSE OF REPRESENTATIVES

ONE HUNDRED TENTH CONGRESS

FIRST SESSION

MAY 8, 2007

Serial No. 110–26

Printed for the use of the Committee on the Judiciary

Available via the World Wide Web: http://judiciary.house.gov

U.S. GOVERNMENT PRINTING OFFICE

35–242 PDF WASHINGTON : 2007

For sale by the Superintendent of Documents, U.S. Government Printing Office
Internet: bookstore.gpo.gov Phone: toll free (866) 512–1800; DC area (202) 512–1800
Fax: (202) 512–2250 Mail: Stop SSOP, Washington, DC 20402–0001

COMMITTEE ON THE JUDICIARY

JOHN CONYERS, JR., Michigan, *Chairman*

HOWARD L. BERMAN, California
RICK BOUCHER, Virginia
JERROLD NADLER, New York
ROBERT C. SCOTT, Virginia
MELVIN L. WATT, North Carolina
ZOE LOFGREN, California
SHEILA JACKSON LEE, Texas
MAXINE WATERS, California
MARTIN T. MEEHAN, Massachusetts
WILLIAM D. DELAHUNT, Massachusetts
ROBERT WEXLER, Florida
LINDA T. SÁNCHEZ, California
STEVE COHEN, Tennessee
HANK JOHNSON, Georgia
LUIS V. GUTIERREZ, Illinois
BRAD SHERMAN, California
TAMMY BALDWIN, Wisconsin
ANTHONY D. WEINER, New York
ADAM B. SCHIFF, California
ARTUR DAVIS, Alabama
DEBBIE WASSERMAN SCHULTZ, Florida
KEITH ELLISON, Minnesota

LAMAR SMITH, Texas
F. JAMES SENSENBRENNER, JR., Wisconsin
HOWARD COBLE, North Carolina
ELTON GALLEGLY, California
BOB GOODLATTE, Virginia
STEVE CHABOT, Ohio
DANIEL E. LUNGREN, California
CHRIS CANNON, Utah
RIC KELLER, Florida
DARRELL ISSA, California
MIKE PENCE, Indiana
J. RANDY FORBES, Virginia
STEVE KING, Iowa
TOM FEENEY, Florida
TRENT FRANKS, Arizona
LOUIE GOHMERT, Texas
JIM JORDAN, Ohio

PERRY APELBAUM, *Staff Director and Chief Counsel*
JOSEPH GIBSON, *Minority Chief Counsel*

SUBCOMMITTEE ON IMMIGRATION, CITIZENSHIP, REFUGEES, BORDER SECURITY, AND INTERNATIONAL LAW

ZOE LOFGREN, California, *Chairwoman*

LUIS V. GUTIERREZ, Illinois
HOWARD L. BERMAN, California
SHEILA JACKSON LEE, Texas
MAXINE WATERS, California
MARTIN T. MEEHAN, Massachusetts
WILLIAM D. DELAHUNT, Massachusetts
LINDA T. SÁNCHEZ, California
ARTUR DAVIS, Alabama
KEITH ELLISON, Minnesota

STEVE KING, Iowa
ELTON GALLEGLY, California
BOB GOODLATTE, Virginia
DANIEL E. LUNGREN, California
J. RANDY FORBES, Virginia
LOUIE GOHMERT, Texas

UR MENDOZA JADDOU, *Chief Counsel*
GEORGE FISHMAN, *Minority Counsel*

CONTENTS

MAY 8, 2007

OPENING STATEMENT

Page

The Honorable Zoe Lofgren, a Representative in Congress from the State of California, and Chairwoman, Subcommittee on Immigration, Citizenship, Refugees, Border Security, and International Law 1

The Honorable Steve King, a Representative in Congress from the State of Iowa, and Ranking Member, Subcommittee on Immigration, Citizenship, Refugees, Border Security, and International Law 3

The Honorable John Conyers, Jr., a Representative in Congress from the State of Michigan, and Chairman, Committee on the Judiciary 6

WITNESSES

The Honorable Phil Gingrey, a Representative in Congress from the State of Georgia

Oral Testimony 9

Prepared Statement 11

Ms. Harriet Duleep, Ph.D., Research Professor of Public Policy, Thomas Jefferson Program in Public Policy, The College of William and Mary

Oral Testimony 12

Prepared Statement 15

Mr. Bill Ong Hing, Professor of Law and Asian American Studies, University of California-Davis

Oral Testimony 23

Prepared Statement 24

Mr. Stuart Anderson, Executive Director, National Foundation for American Policy

Oral Testimony 35

Prepared Statement 37

LETTERS, STATEMENTS, ETC., SUBMITTED FOR THE HEARING

Prepared Statement of the Honorable Zoe Lofgren, a Representative in Congress from the State of California, and Chairwoman, Subcommittee on Immigration, Citizenship, Refugees, Border Security, and International Law 2

Prepared Statement of the Honorable Steve King, a Representative in Congress from the State of Iowa, and Ranking Member, Subcommittee on Immigration, Citizenship, Refugees, Border Security, and International Law 5

Prepared Statement of the Honorable John Conyers, Jr., a Representative in Congress from the State of Michigan, and Chairman, Committee on the Judiciary 7

APPENDIX

MATERIAL SUBMITTED FOR THE HEARING RECORD

"Chain Migration Under Current U.S. Law: The Potential Impact of a Single Employment-Based Immigrant" Chart produced by NumbersUSA, submitted to the record by the Honorable Phil Gingrey, a Representative in Congress from the State of Georgia 72

Page

"Review and Outlook: Immigration Spring," an editorial in the *Wall Street Journal*, May 2, 2007 76
Prepared Statement of Members of American Families United and United Families, on Family Immigration 78
Prepared Statement on Interfaith Family Immigration by American Friends Service Committee, *et al.* 111
Prepared Statement of Leslye Orloff, Director and Associate Vice President of the Immigrant Women Program at Legal Momentum, also representing the National Network to End Violence Against Immigrant Women 113
Letter from the Lutheran Immigration and Refugee Service to the Honorable Zoe Lofgren, Chairwoman, Subcommittee on Immigration, Citizenship, Refugees, Border Security, and International Law 118
Prepared Statement of Karen K. Narasaki, President & Executive Director, Asian American Justice Center on "The Importance of Family-Based Immigration to American Society and the Economy" 120
"Admissions of Lawful Permanent Residents (all categories) 2001–2005" compiled by the Congressional Research Service, submitted to the record by the Honorable Steve King, Ranking Member, Subcommittee on Immigration, Citizenship, Refugees, Border Security, and International Law 129
"Family-Based Admissions 2006," published by the U.S. Department of Homeland Security, submitted to the record by the Honorable Steve King, Ranking Member, Subcommittee on Immigration, Citizenship, Refugees, Border Security, and International Law 131
Responses to Post-Hearing Questions from the Honorable Phil Gingrey, a Representative in Congress from the State of Georgia 132
Responses to Post-Hearing Questions from Harriet Duleep, Ph.D., Research Professor of Public Policy, Thomas Jefferson Program in Public Policy, The College of William and Mary 135
Responses to Post-Hearing Questions from Bill Ong Hing, Professor of Law and Asian American Studies, University of California-Davis 137
Response to Post-Hearing Question from Stuart Anderson, Executive Director, National Foundation for American Policy 138

ROLE OF FAMILY-BASED IMMIGRATION IN THE U.S. IMMIGRATION SYSTEM

TUESDAY, MAY 8, 2007

HOUSE OF REPRESENTATIVES,
SUBCOMMITTEE ON IMMIGRATION, CITIZENSHIP,
REFUGEES, BORDER SECURITY, AND INTERNATIONAL LAW
COMMITTEE ON THE JUDICIARY,
Washington, DC.

The Subcommittee met, pursuant to notice, at 9:37 a.m., in Room 2141, Rayburn House Office Building, the Honorable Zoe Lofgren (Chairwoman of the Subcommittee) presiding.

Present: Representatives Lofgren, Gutierrez, Berman, Jackson Lee, Waters, Delahunt, Sánchez, Conyers, King, Gallegly, Goodlatte, Lungren, and Gohmert.

Staff present: Ur Mendoza Jaddou, Majority Chief Counsel; J. Traci Hong, Majority Counsel; George Fishman, Minority Counsel; and Benjamin Staub, Professional Staff Member.

Ms. LOFGREN. This hearing of the Subcommittee on Immigration, Citizenship, Refugees, Border Security, and International Law will come to order.

I would like to welcome the Immigration Subcommittee Members, our witnesses, and members of the public who are here today for the Subcommittee's eighth hearing on comprehensive immigration reform.

At our hearings on comprehensive immigration reform, many of our witnesses, both majority and minority, have stated that our immigration system should serve the interests of the Nation, and we agree with that.

Some, including the Bush administration, have suggested that family-based immigration, as it is currently codified in the immigration law, does not benefit the Nation.

They assume that family immigrants do not serve the Nation because such immigrants come to the United States because of their family ties rather than a demonstrated capacity to contribute economically to our country.

They argue that we should eliminate most forms of family-based immigration and replace it with an immigration system that focuses solely on the economic needs of our Nation, either through an enhanced employment-based preference system or a point system.

Under our current immigration system, 39 percent of immigrants become legal permanent residents based on their status as unmarried minor children, spouses, or parents of U.S. citizens.

Another 19 percent become legal permanent residents based upon their status as adult sons and daughters or siblings of U.S. citizens, or spouses and unmarried children of legal permanent residents.

To help us determine whether family-based immigration has, in fact, served the interest of our Nation, today we will examine the role that family-based immigrants have played in our economy and society, particularly since the 1965 Immigration Act, which emphasized the importance of family reunification as a bedrock principle of our immigration system.

A review of scholarly research by labor economists and sociologists shows that family immigrants make important and unique contributions to the U.S. economy and society.

The research shows that family-based immigrants provide the United States with flexible workers who are willing and able to learn new skills to meet the needs of the U.S. labor market.

In addition, research indicates that family-based immigrants contribute to the development of small and large businesses that would not have been created without their presence in the United States.

Our witnesses today will also help us to understand the role that families play in fueling the economic prosperity of the U.S. citizen and legal permanent resident family members who sponsor their immigrant petitions.

Not only is it an American value and a pro-family value to keep U.S. citizen and legal permanent resident families together, it is in the economic interest of the United States.

Thank you again to our distinguished witnesses for being here today to help us sort through a complex and very important issue for the American economy and our society.

I would now recognize our distinguished Ranking Member, minority Member, Steve King, for his opening statement.

[The prepared statement of Ms. Lofgren follows:]

PREPARED STATEMENT OF THE HONORABLE ZOE LOFGREN, A REPRESENTATIVE IN CONGRESS FROM THE STATE OF CALIFORNIA, AND CHAIRWOMAN, SUBCOMMITTEE ON IMMIGRATION, CITIZENSHIP, REFUGEES, BORDER SECURITY, AND INTERNATIONAL LAW

I would like to welcome the Immigration Subcommittee Members, our witnesses, and members of the public to the Subcommittee's eighth hearing on comprehensive immigration reform.

At our hearings on comprehensive immigration reform, many of our witnesses, both majority and minority, have rightly stated that our immigration system should serve the interests of the nation.

Some, including the Bush Administration, have suggested that family-based immigration, as it is currently codified in the immigration law, does not benefit the nation. They assume that family immigrants do not serve the nation because such immigrants come to the United States because of their family ties, rather than a demonstrated capacity to contribute economically to our country. They argue that we should eliminate most forms of family-based immigration and replace it with an immigration system that focuses solely upon the economic needs of our nation, either through an enhanced employment-based preference system or a points system.

Under our current immigration system, 39% of immigrants become legal permanent residents based upon their status as unmarried minor children, spouses, or parents of U.S. citizens. Another 19% become legal permanent residents based upon their status as adult sons and daughters or siblings of U.S. citizens, or spouses and unmarried children of legal permanent residents.

To help us determine whether family-based immigration has in fact served the interests of our nation, today we will examine the role that family-based immigrants

have played in our economy and society, particularly since the 1965 Immigration Act which emphasized the importance of family reunification as a bedrock principle of our immigration system.

A review of scholarly research by labor economists and sociologists shows that family immigrants make important and unique contributions to the U.S. economy and society. The research shows that family-based immigrants provide the United States with flexible workers who are willing and able to learn new skills to meet the needs of the U.S. labor market. In addition, research indicates that family-based immigrants contribute to the development of small and large businesses that would not have been created without their presence in the U.S.

Our witnesses today will also help us to understand the role that families play in fueling the economic prosperity of the U.S. citizen and legal permanent resident family members who sponsor their immigration petitions.

Not only is it an American value and a pro-family value to keep U.S. citizen and legal permanent resident families together, it is in the economic interest of the United States.

Thank you again to our distinguished witnesses for being here today to help us sort through a complex and very important issue for the American economy and our society.

Mr. KING. Thank you, Madam Chair, and also Chairman Conyers, and I appreciate you holding this hearing.

And I thank all the witnesses for being willing to be here and, you know, present yourselves before this process that we have.

As we address our expansive family-based policy, I am mindful of the fact that many of us in this room are the descendants of immigrants who came to these shores with little or nothing besides their skills and enthusiasm.

With much hard work and perseverance, they contributed greatly to the building of this country. We are their success stories.

I also point out that all nations are nations of immigrants, and the same stories exist in many of the other countries, although we have a certain spirit here that is exclusive, I believe, to the experience of the rest of the world.

But because we cannot admit all who desire to make America their home, we must make difficult choices. Last year, the United States granted permanent residence to 1,122,000 aliens, the highest level since 1907.

And if you will remember, 1907, just last month was the centennial anniversary of the highest day at Ellis Island, where 11,747 immigrants were processed through there on that day last month on the 17th of April.

The vast majority of the American people have consistently said that they don't want higher immigration levels.

In 1965, legislation was passed with the laudable goal of eliminating national origin discrimination from our immigration policy. The 1965 act made family reunification the cornerstone of our immigration policy. It remains so to this day.

In addition to promoting the unity of the nuclear family, the 1965 act also extended immigration benefits to other categories of family members, including the sons and daughters of United States citizens who, either because of age or marriage, are no longer dependents.

The adult siblings of the United States citizens and the unmarried adult sons and daughters of unlawful permanent residents were also included.

In testimony before the Senate Immigration Subcommittee on February 10th, 1965, Myra C. Hacker from the New Jersey Coali-

tion urged that, "the hidden mathematics of the bill should be made clear to the public so that they may tell their Congressmen how they feel about providing jobs, schools, homes, security against want, citizen education, et cetera for an indeterminately enormous number of aliens." That was 1965.

But at the same hearing, Senator Kennedy reassured the Committee that immigration levels after the 1965 bill would remain substantially the same.

There isn't any basis to defend that statement of Senator Kennedy's today, but he is advocating strongly to do the same thing again in 2007 that he was part of in 1965, same rationale, and I will predict the same result if he gets his way.

What happened was that an exponentially increasing wave of chain migration was set in motion. Through the 1970's and 1980's, the prior average of 230,000 new immigrants per year more than doubled, to in excess of 500,000.

Now, in the 21st century, we are admitting more than a million new immigrants a year—as I said, 1,122,000 last year—and that is legal.

During these decades, immigration contributed a majority of total U.S. population growth, and more than half of the infrastructure and schools that were built were built to accommodate immigrants.

After extensive study of our family-based immigration scheme, the Barbara Jordan-led U.S. Commission on Immigration Reform concluded in 1995 that it was time to shift our priorities, and they recommended that they focus on uniting the nuclear families and attracting skilled workers.

The commission advised unless there is a compelling national interest to do otherwise, immigrants should be chosen on the basis of the skills they contribute to the U.S. economy.

I agree with Barbara Jordan that reuniting a nuclear family with a sponsor who played by the rules and came here the right way is such a compelling national interest, and I agree that bringing in their adult children and siblings is not.

In fact, of the entire pie chart of our immigration, we have testimony in prior hearings that demonstrates that as much as 89 percent and perhaps as much as 93 percent of our legal immigration is based on humanitarian reasons, and as little as 7 percent to 11 percent is based upon skills or merit.

NumbersUSA estimates that the admission of a single lawful permanent resident under our current law can hypothetically lead to the eventual immigration of hundreds of relatives. This lengthy chain of migration cannot be justified.

While nuclear families should be united, we need to eliminate other family preference categories and refocus our priorities on those who possess the education and skills we need to be competitive in a global economy.

We should not reserve so many of our immigrant visas for aliens whose only attribute is that they happen to be related to a U.S. citizen or permanent resident.

Last year, 46,923 non-dependent sons and daughters were admitted along with 63,255 siblings. Another 120,000 slots were given to the parents of United States citizens. This means that 232,619 of

the 803,000 family-based immigrants in 2006 were not spouses or minor children.

I also submit that if the sibling and adult children categories are eliminated, then justification for an unlimited parent category also diminishes.

I recognize that we have good witnesses before this panel, and I also recognize that the Honorable Dr. Congressman Gingrey is here to talk about the family reunification that has been part of the history and make a recommendation on what he sees would be best in the future.

So I will ask unanimous consent to introduce the rest of my testimony into the record so that we may be able to get forward with the testimony of the witnesses.

And I would yield back.

[The prepared statement of Mr. King follows:]

PREPARED STATEMENT OF THE HONORABLE STEVE KING, A REPRESENTATIVE IN CONGRESS FROM THE STATE OF IOWA, AND RANKING MEMBER, SUBCOMMITTEE ON IMMIGRATION, CITIZENSHIP, REFUGEES, BORDER SECURITY, AND INTERNATIONAL LAW

Madame Chairwoman, as we address our expansive family-based policy, I am mindful of the fact that many of us in this room are the descendants of immigrants who came to these shores with little or nothing besides their skills and enthusiasm. With much hard work and perseverance they contributed greatly to the building of this country. We are their success stories.

However, because we cannot admit all who desire to make America their home, we must make difficult choices. Last year, we granted permanent residence to close to 1.3 million aliens, the highest level since 1907. The vast majority of the American people have consistently said that they don't want higher immigration levels.

In 1965, legislation was passed with the laudable goal of eliminating national origin discrimination from our immigration policy. The 1965 Act made family unification the cornerstone of our immigration policy. It remains so to this day.

In addition to promoting the unity of the nuclear family, the 1965 Act also extended immigration benefits to other categories of family members, including the sons and daughters of United States citizens who (either because of age or marriage) are no longer dependents, the adult siblings of United States citizens, and the unmarried adult sons and daughters of lawful permanent residents.

In testimony before the Senate immigration subcommittee on February 10, 1965, Myra C. Hacker from the New Jersey Coalition, urged that the "hidden mathematics of the bill should be made clear to the public so that they may tell their Congressman how they feel about providing jobs, schools, homes, security against want, citizen education . . . for an indeterminately enormous number of aliens."

At the same hearing, Senator Kennedy reassured the committee that immigration levels after the 1965 bill would remain substantially the same.

What happened was that an exponentially increasing wave of chain migration was set in motion. Through the 70s and 80s, the prior average of 230,000 new immigrants per year more than doubled to in excess of 500,000. Now, in the 21st Century, we are admitting more than a million new immigrants a year. During these decades, immigration contributed a majority of total U.S. population growth, and more than half of the infrastructure and schools that were built were built to accommodate immigrants.

After extensive study of our family-based immigration scheme, the Barbara Jordan-led U.S. Commission on Immigration Reform concluded in 1995 that it was time to shift our priorities, and recommended that they focus on uniting the nuclear families and attracting skilled workers. The Commission advised: "unless there is a compelling national interest to do otherwise, immigrants should be chosen on the basis of the skills they contribute to the U.S. economy." I agree with Barbara Jordan that reuniting a nuclear family member with a sponsor who played by the rules and came here the right way is such a compelling national interest-and I agree that bringing in their adult children and siblings is not.

Numbers USA estimates that the admission of a single lawful permanent resident under our current law can hypothetically lead to the eventual immigration of hundreds of relatives.

This lengthy chain of migration cannot be justified. While nuclear families should be united, we need to eliminate other family preference categories and refocus our priorities on those who possess the education and skills we need to be competitive in a global economy. We should not reserve so many of our immigrant visas for aliens whose only attribute is that they happen to be related to a U.S. citizen or permanent resident.

Last year, 46,923 non-dependent sons and daughters were admitted, along with 63,255 siblings. Another 120,441 slots were given to the parents of United States citizens. This means that 232,619 of the 803,335 family-based immigrants in 2006 were not spouses or minor children. I also submit that if the sibling and adult children categories are eliminated, then justification for an unlimited parent category also diminishes, as it becomes less likely that an aging parent who remains in the home country will be without a son, daughter, or adult grandchild there to care for him or her.

Access to, and improvements in, telecommunications and travel have changed the way people from all economic sectors remain close to their families. The world is smaller. Many of us in this hearing room have made our own difficult choices about education, work, or other life opportunities that require us to live far from our parents, adult children, and siblings; yet we maintain a close relationship with them through e-mail, phone calls, and visits. It is not unreasonable to expect aliens who are not part of the nuclear family of a citizen or a lawful permanent resident, and who do not qualify for a skills-based visa, to do the same. In today's world, keeping in touch with a sibling who lives on the other coast of the USA is little different than keeping in touch with a sibling in England or Malaysia.

There is a backlog of over three million aliens who have been approved for family-preference visas, almost half of whom are the brothers and sisters of U.S. citizens. This backlog will only grow in the future, with individuals sometimes waiting decades for green cards. Unless we are going to drastically increase legal immigration, this is an untenable situation. It creates a sense of entitlement and only encourages illegal immigration.

Ms. LOFGREN. Without objection.

I would now be pleased to recognize the Chairman of the full Committee, Congressman Conyers, Chairman Conyers, for his opening statement.

Mr. CONYERS. Thank you, Chairwoman Lofgren and this dynamic Subcommittee that is working so hard.

I join in welcoming Dr. Gingrey, with whom I have the pleasure of working on a number of issues and seeing him regularly, and the witnesses, too, the other witnesses.

This is an important part of forming a new immigration reform. What do we do with the family-based immigration system? We have three options.

One, we can abandon our system. It would ignore the realities of people's lives and the values of the country.

Two, we could maintain it without change. But the problem there is that there are tremendous backlogs that have split families apart under the current system. And I think we owe a responsibility to deal with it.

Or three, we could improve the family-based immigration system, using comprehensive reform to remove those impediments to immigration so that people could come to the United States and join their families through a wide variety of programs.

Now, we all know that. We are a Nation of immigrants. So this isn't some new theory that is being developed. We want to build on and improve where we are.

Now, while an employment-based system might respond to short-term economic needs, it really undermines the core humanitarian value of family unification.

A family-based immigration system isn't just feel good, or doing the right thing or being nice. It has long been a central tenet of our Nation's immigration policy, recognizing immigrants are first and foremost people who are not just motivated because of economic concerns but also by a desire to take care of their families. And by harnessing that motivation, we can harness all that is good about immigration.

And as my friend, the Ranking Member of this Subcommittee, Steve King, has frequently asserted, the family is the backbone of this Nation. Couldn't agree with you more, Mr. Ranking Member. Immigrant families have strengthened the country immeasurably, and we should support them.

The 1965 immigration law, now, rejected previous quota systems that had long discriminated against people of color and persons from the developing world. It was a dismal part of our policy. And so instead, we have moved to a system that supports family unification.

Now, what do families provide? Stability and values. The benefit of an immigrant who is in the United States with his wife and children is a stable, contributing member of the community.

The parents who have their children living with them can better inculcate them with American values in a supportive environment. And they provide the entrepreneurial spirit needed to stimulate economic growth in our communities.

And as we will undoubtedly hear from this excellent panel today, family-based immigration promotes, among other positive developments, it stimulates the establishment of small businesses. These immigrants often find niches in American economic systems that have not been filled or could not be filled because of lack of skills, language, or lack of access to capital.

Now, these small businesses revitalize our urban and rural communities, and my hometown is an example of this, where, in southeastern Michigan, we went from 383 small Hispanic businesses in 2002 to 955. It is just one example of some of the benefits of family-based immigration.

And I yield back the balance of my time. Thank you.

[The prepared statement of Mr. Conyers follows:]

PREPARED STATEMENT OF THE HONORABLE JOHN CONYERS, JR., A REPRESENTATIVE IN CONGRESS FROM THE STATE OF MICHIGAN, AND CHAIRMAN, COMMITTEE ON THE JUDICIARY

Over the course of the National debate on immigration reform, some have suggested that we should abandon our traditional reliance on a family-based immigration system and replace it with one that is solely based on the needs of employers.

We seem to have three options. We could *abandon our system*, but we would then ignore the realities of people's lives and the values of our country. We could *maintain it without change*, but there are tremendous backlogs that split families apart under the current system. Or we could improve it, using comprehensive reform to remove impediments to immigration so that people could come to the United States and join their families through a wide variety of programs.

While an employment-based system may respond to short-term economic needs, it could undermine the core humanitarian value of family unification. A family-based immigration system is not just a "feel-good" policy. It has long been the central tenant of our Nation's immigration policy recognizing that immigrants are first and foremost people who are motivated not only because of economic concerns, but by a desire to take care of their families.

By harnessing that motivation, we can harness all that is good about immigration. As my colleague, the Ranking Member of this Subcommittee, has himself stated, the family is the "backbone of this nation." [1]

I agree with Mr. King wholeheartedly. Immigrant families have strengthened this country immeasurably, and we should support them. The 1965 Immigration Law rejected previous quota systems that discriminated against people of color and persons from the developing world. Instead, we moved to a system that supports family unification instead.

What do families provide? Stability and values. Let me mention just a few.

> An immigrant who is in the United States with his wife and children is a stable, contributing member of the community.
>
> The parents, who have their children living with them, can better inculcate them with American values in a supportive environment.
>
> And, they provide the entrepreneurial spirit needed to stimulate economic growth in our communities.

As we will undoubtedly hear from our witnesses today, family-based immigration promotes, among other positive developments, stimulates the establishment of small businesses. These immigrants often find niches that American businesses have not filled or could not fill because of lack of skills, language, or lack of access to capital. These small businesses, in turn, revitalize our urban and rural communities by providing jobs and encouraging development of other resources.

My hometown is an example of this. Every five years, the Census Bureau releases in-depth economic studies. For example, Southeastern Michigan in 2002 experienced an increase from 383 to 955 Hispanic-owned businesses *in the City of Detroit alone.* While many of these businesses were single-proprietor or family-run with no paid employees, 146 of these small businesses accounted for 1,268 jobs in Detroit.

This is just one example of the kind of economic engine that family-based immigration can be. As people put down roots and become part of the American fabric, all of us benefit. Families win; America wins.

Ms. LOFGREN. Thank you, Chairman Conyers.

In the interest of proceeding to our witnesses, and mindful of our schedules, I would ask that other Members submit their statements for the record within 5 legislative days. And, without objection, all opening statements will be placed in the record.

Without objection, the Chair is authorized to declare a recess of the hearing at any time.

We have a distinguished panel of witnesses here today to help us consider the important issues before us.

I am pleased, first, to introduce Dr. Harriet Duleep, a Research Professor of Public Policy for the Thomas Jefferson Program in Public Policy at the College of William and Mary. Dr. Duleep additionally serves as a Research Fellow at the Institute for the Study of Labor in Bonn, Germany and the Deputy Editor for the publication *Demography*. Prior to joining the faculty of William and Mary, Dr. Duleep worked as an Economist at the Social Security Administration and, between 1985 and 1992, served as a Senior Economist and Acting Director of the Research Office of the U.S. Commission on Civil Rights. She holds her bachelor's degree from the University of Michigan and her Ph.D. from the Massachusetts Institute of Technology.

We are also joined today by Bill Ong Hing, a professor of Law and Asian American studies at the University of California-Davis. Professor Hing teaches an array of subjects at Davis; among them, courses in immigration policy and judicial processes. And he directs the law school's clinical program. A renowned author, Professor

[1]Press Release, *"King Hosts Conference on Civic Involvement for Iowa Faith Community,"* August 17, 2006 http://www.house.gov/list/press/ia05__king/PRFaithandFreedomConference081706.html

Hing additionally volunteers as a general counsel for the Immigration Legal Resource Center in San Francisco. He sits on the board of directors for the Asian Law Caucus, the Migration Policy Institute, and the National Advisory Council of the Asian-American Justice Center. Professor Hing served as co-counsel in the precedent-setting 1987 Supreme Court asylum case, *INS v. Cardoza-Fonseca*. He earned his bachelor's degree from the University of California-Berkeley and his law degree from the University of San Francisco.

Next, I am pleased to welcome Stuart Anderson, the executive director of the National Foundation for American Policy. From 2001 to 2003, Mr. Anderson served as the Executive Associate Commissioner for Policy and Planning and additionally as Counselor to the Commissioner at the U.S. Immigration and Naturalization Service. Mr. Anderson is no stranger to the halls of Congress. He spent nearly 5 years on Capitol Hill working for the Senate's Immigration Subcommittee, first under Senator Spencer Abraham and then as Staff Director under Senator Sam Brownback. He also worked as the Director of Trade and Immigration Studies at the Cato Institute here in Washington. He graduated with a bachelor's degree from Drew University and a master's from Georgetown University.

And finally, I would like to extend a warm welcome to a familiar face, Congressman Phil Gingrey of Georgia's 11th Congressional District. Dr. Gingrey was elected to the House in 2002 after 4 years in the Georgia State Senate. He holds his bachelor's degree from Georgia Tech and his medical degree from the Medical College of Georgia. Dr. Gingrey practiced medicine for 26 years as an OB-GYN and delivered more than 5,200 babies. He and his wife, Billie, have four children and five grandchildren.

As Congressman Gingrey knows, each of the written statements will be made part of the record in its entirety. And I would ask that the witnesses summarize their testimony in 5 minutes or less.

These little machines turn yellow when you have 1 minute to go. And when your time is up, they turn red. And we would ask at that point that you summarize and cease so the next witness can begin.

We will now proceed to question our witnesses and to hear from our witnesses. And at the request of the minority and in deference to our colleague, we would ask that Congressman Gingrey begin the testimony.

Congressman?

TESTIMONY OF THE HONORABLE PHIL GINGREY, A REPRESENTATIVE IN CONGRESS FROM THE STATE OF GEORGIA

Mr. GINGREY. Madam Chairwoman, thank you so much. And I appreciate the deference in allowing me to go first.

Ranking Member King, Committee Chairman Mr. Conyers, and other Subcommittee Members, friends all, I thank you for the opportunity to testify today about the role of the family in the immigration process.

And as Chairwoman Lofgren stated, my full comments will be submitted for the record, and I will just summarize.

The Chairman of the full Committee, Mr. Conyers, was just talking about how important family unification is, how important fami-

lies are to our society. And I agree with him completely on that, no question about it.

People do come here not only to support themselves but to support their families. And I think we can do that, and I think the bill that I have introduced in this 110th Congress, H.R. 938, the Nuclear Family Priority Act, does just that.

But I think that the problem that we have gotten into—and I really believe that this started in 1965, and the 1965 act that put an emphasis on family reunification—in the first 200 years of our country, we averaged about 250,000 immigrants per year into the United States.

And as Ranking Member King pointed out in his opening remarks, in the last number, I guess in 2006, that had ballooned to over a million, 1,100,000-plus. And that is, I think, in large part because of this emphasis after 1965 that maybe overemphasized or maybe even over-interpreted the real definition of family reunification.

And under the current policy, a single person that comes into this country legally, either by virtue of an asylum, or a refugee, or a legal permanent resident with a green card who comes in because they have been in the queue for a long time—they have a particular job skill. Not only can they help themselves, but they can also help our great country.

But when they come, then when they achieve citizenship, they are allowed to bring family members, but it is not just the nuclear family. It is not just their spouse and their dependent children from their home country.

It is not just their parents and maybe their spouse's parents, but it includes adult brothers and sisters, siblings. It includes aunts and uncles and cousins, and whatever the legal term, Mr. Chairman, is—*per stirpes*—I think that is used a lot. I don't know how far out that goes.

But I do know that as a result of that, one person, one person who is in this country legally, who deserves that opportunity to be here in one of these three categories that I mentioned, over a period of as short as 15 years, they can literally bring in an additional 273 people, and all these aunts and uncles and cousins and thirds and whatever—273 people, Madam Chairwoman, who may have great job skills, but they may not.

And statistics, I think, pretty much bear this out, that many, many don't. In fact, many have very little education and become high school dropouts when they come into this country and are not productive and don't have any particular job skills.

So when you think about the fact that we have a huge problem in this country, and that is called 12 million—"undocumented" is a euphemism. "Illegal" is the actual fact.

I know Mr. Gutierrez is working very hard trying to solve that problem along with our colleague Jeff Flake in their STRIVE Act, and a lot of people in both chambers are working very hard to try to deal with that.

But I think that we can achieve the goal and really the spirit of the law as the Chairman of the full Committee, Mr. Conyers, said in regard to the value of families with going back and doing what, really, we intended to do way back when this country welcomed our

immigrant population and to say that, yes, bring your families, but let's restrict it to the nuclear family.

And instead of 273 people that one individual can bring in over the course of 15 years, we reduce that down to 37 in the extreme, and this would, in the extreme, mean that each one of those that were eligible to come, wanted to come, were still alive, and they came.

I see that magic red light went off quicker than I thought it would, but that has got something to do with this Southern drawl and slow way of talking. And I will yield back. I have no further time, but I really look forward your questions, Madam Chairwoman.

[The prepared statement of Dr. Gingrey follows:]

PREPARED STATEMENT OF THE HONORABLE PHIL GINGREY, A REPRESENTATIVE IN CONGRESS FROM THE STATE OF GEORGIA

Madame Chairwoman, Ranking Member King, and members of the Subcommittee, thank you for the opportunity to testify today about the role of family in the immigration process, specifically the problem of chain migration. I introduced legislation last year after learning about some of the severe problems of our current system of legal immigration that frankly put more emphasis on genealogy than skill, English proficiency, and overall contribution to the United States.

While our borders still need security, our border patrol agents still need support, and, dare I say, we still need to find a solution to the 12 million illegal aliens currently residing in the United States, an often overlooked problem is our flawed system of legal immigration and how it may contribute to illegal immigration, drive population growth—especially our poor population—and add to our assimilation problems. Furthermore, this flawed system adds to our nation's financial problems considering that Family-based immigrants tend to be the most impoverished and on average have the lowest skill levels and earning potential.

What is even more distressing is that most of these legal immigrants are admitted entirely because of their familial relation to other legal immigrants. This problem is called Chain Migration and it is one of the fundamental reasons why our businesses have problems sponsoring legal immigrants, why our federal caseworkers have problems with paperwork backlogs, and why our system has become so frustrating that individuals outside the United States would rather risk immigrating here illegally than wait forever in line. For example, one immigrant may qualify for an immediate visa as an adult brother or sister of a naturalized U.S. citizen, yet depending on the country of application it could be 10 to 40 years or more before that visa is available under regular skill-based circumstances. As a result, a third of current legal immigrants told a "new immigrant" survey that they first came here as illegal aliens until their visa came up and they then went home to process the paperwork.

From 1776 to 1976 our immigration tradition allowed an average of 250,000 foreign workers and dependants every year. However, the 1965 immigration preference system, and subsequent modifications, including the 1990 Immigration Act, expanded immigration levels far beyond traditional levels, mostly by prioritizing extended family members. Our immigration system is obviously out of kilter when one immigrant can yield upwards of 273 other legal immigrants in as short as 15 years, assuming the average birthrate of the developing world. It is hard to believe one immigrant of skill or humanitarian need could yield so many dependants under our laws of family reunification, yet the only limits on our current "chain" system are age and death. Assuming everyone in an immigrant's family wants to immigrate to the United States and they are all alive, this 273 number is a real possibly. It may not be the norm, but even a fraction of that is a real problem.

The chain migration categories actually encourage more illegal immigration by creating a sense of entitlement to come to the United States. Once an extended family member applies for an immigrant visa and then is put in the visa waiting list because the categories are oversubscribed, the applicant is more likely to decide to come here illegally to await the visa. Receipt of the immigrant visa becomes a technicality, rather than a prerequisite to entering the United States.

Furthermore, these numbers do not account for children who become citizens through birthright interpretation of our 14th Amendment, which can further complicate the problem. In this case, don't just do the math, but do the multiplication.

For example, in the City of Gainesville in Hall County, Georgia, growth in the foreign-born population is actually surpassing the natural increase. This is an extraordinary rate of immigration. The average level of legal immigration into the U.S. since 1990 is over 1,000,000 a year. This is equivalent to importing the entire population of Dallas, Texas—or Atlanta, Augusta, and Savannah, Georgia combined. This translates into backlogs, an overwhelming immigration bureaucracy, and immigration employees incentivized to cut corners and put volume over scrutiny. Instead, we need to restore our traditional system and levels of immigration with emphasis on skill, English proficiency, and the nuclear family.

The U.S. Commission on Immigration Reform, a bipartisan body chaired by the late Congresswoman Barbara Jordan, recognized and documented the harms caused by chain migration in the 1990s. The commission found that America's national interests would be best served by the elimination of extended family-based immigration categories as well as the visa lottery; and it urged that nuclear family members—spouses and minor children—become the sole family-based priority. In other words, one of the top priorities for immigration reform is to restore emphasis on nuclear families and away from the adult children, uncles, aunts, cousins, and distant relatives of the original immigrant without regard to job skills or the needs of our country.

To quote the commission report: *A properly regulated system of legal immigration is in the national interest of the United States. Such a system enhances the benefits of immigration while protecting against potential harms. Unless there is a compelling national interest to do otherwise, immigrants should be chosen on the basis of the skills they contribute to the U.S. economy. The Commission believes that admission of nuclear family members and refugees provide such a compelling national interest. Reunification of adult children and siblings of adult citizens solely because of their family relationship is not as compelling.*

With this in mind and in response to our growing immigration problem, both legal and illegal, I have introduced H.R. 938, the Nuclear Family Priority Act. With passage of my legislation, we can reduce a chain of 273—or more—to a chain of 37. That's an 87 % decrease in our current system of immigration. The formula is simple: the original legal immigrant can only bring his or her spouse, dependant children, and parents. Our system of family reunification will still remain generous and open, but with enough restraint to keep the system fair and balanced for everyone.

I appreciate your time and consideration. Thank you and I would be happy to take any questions from the Committee.

Ms. LOFGREN. Thank you, Congressman. Perhaps we should give additional time to witnesses from the South, but we haven't taken up that rule yet. [Laughter.]

Mr. GINGREY. Thank you, Madam Chairwoman.

Ms. LOFGREN. Dr. Duleep?

TESTIMONY OF HARRIET DULEEP, Ph.D., RESEARCH PROFESSOR OF PUBLIC POLICY, THOMAS JEFFERSON PROGRAM IN PUBLIC POLICY, THE COLLEGE OF WILLIAM AND MARY

Ms. DULEEP. As has already been stated by our Chairwoman and also indicated by Representative King, a widely shared perspective is that desirable immigrants are those who rapidly adjust to the U.S. labor market.

From this perspective, employment-based immigrants are the clear winners. Employment-based immigrants enter the U.S. to fill specific jobs as expressed by an employer's willingness to participate in the labor certification process.

By the very nature of their admission, these immigrants have specific skills that are immediately valued in the U.S. labor market.

Upon their entry, their earnings are similar to those of U.S. natives of similar schooling and experience, and their earnings growth profiles also resemble those of U.S. natives.

If, however, our goal was to devise a policy to attract immigrants who had a high propensity to invest in human capital—that is, who

are willing to engage in a lot of training and schooling—then family-based immigration might be a better bet.

A key characteristic of recent predominantly family-based immigrants is a high propensity to invest in human capital. This can be seen in their earnings profiles. Earnings growth is a sign that human capital investment is taking place.

Family immigrants have very low initial earnings, but they also have extremely high earnings growth. In fact, their earnings growth exceeds that of employment-based immigrants and of U.S. natives.

So it is the case that they start low, but they also have very high earnings growth.

We also find that immigrant earnings patterns that are characterized by low initial earnings and high earnings growth are associated with high rates of schooling, high rates of training, and high rates of occupational change.

Now, one reason the high earnings growth is important is that it attenuates concerns about the economic assimilation of these immigrants. Yes, they start low, but watch what happens over time.

However, a high propensity to invest in human capital yields benefits to the U.S. economy beyond immigrants' own earnings growth.

When demand shifts require new skills to be learned, immigrants who initially lack specific skills will be more likely to pursue the new opportunities than will natives or immigrants with highly transferable skills.

Employment-based immigrants are already earning what we would expect them to earn on the basis of their schooling and education, so they would be unlikely to take a huge pay cut in order to pursue another line of training or another type of career.

Yet policies that bring in immigrants lacking immediately transferable skills, such as family-based admission policies, may promote new business formation and new directions in existing businesses by providing a labor supply that is both willing and able to invest in new skills.

Thus, family-based admission policies, which bring in immigrant lacking immediately transferable skills, increase the supply of flexible human capital.

A labor supply that is willing and able to invest in new skills facilitates innovation and accompanying entrepreneurship. Tailoring immigration to labor shortages is theoretically appealing, but it is extremely difficult to practice.

Yet precisely because they lack specific skills that are immediately valued by the U.S. labor market, family-based immigrants meet labor market needs in an ongoing flexible fashion that contributes to a vibrant economy, which has been characteristic of the U.S.

Family-based policies, as opposed to policies to fill short-run skill needs, also nurture immigrant entrepreneurship. Empirically, my co-author Mark Regets and I find a high correlation between sibling admissions and immigrant entrepreneurship.

Moreover, there is evidence that immigrant communities that are fostered by kinship admissions lead to the development of businesses that would not otherwise exist.

Because of their high propensity to invest in human capital and their effect on immigrant entrepreneurship, family-based immigrants pursue or foster employment opportunities that are distinct from the employment opportunities of U.S. natives.

This suggests that family-based immigrants may compete less with U.S. workers than employment-based immigrants. And there is some empirical evidence on this.

In a study that was done by Elaine Sorensen of the Urban Institute, she finds that immigrants admitted on the basis of occupational skills have a small negative effect on the earnings of White native males.

In contrast, family preference immigrants have a positive effect on native White earnings and employment and a positive effect on native Black earnings.

Family admissions also fosters permanence. Permanence promotes human capital investment. Why invest in human capital investment if you are not going to stay here?

So another way that permanence is productive is that historically groups that were permanently attached to the U.S. showed greater intergenerational educational progress than groups that were less detached.

From the perspective of increasing intergenerational educational growth, policies that encourage permanent immigration, such as kinship admissions, should be encouraged.

To conclude, beyond the obvious humanitarian benefits of reuniting families, there may be potential economic advantages to family-based immigration.

Family-based immigrants and, more generally, immigrants that do not have skills that are immediately valued by the U.S. labor market may benefit the U.S. economy by providing a flexible source of human capital, by developing new areas of businesses——

Ms. LOFGREN. We need to wrap up, Dr. Duleep.

Ms. DULEEP. Yes—and by promoting permanence, and finally by tempering immigrant-native employment competition.

[The prepared statement of Ms. Duleep follows:]

PREPARED STATEMENT OF HARRIET DULEEP

Is Family-Based Immigration Good for the U.S. Economy?

Testimony of Harriet Dnleep to the Subcommittee on Immigration, Citizenship, Refugees, Border Security, and International Law, U.S. House of Representatives

May 8, 2007

The views expressed are those of the author and should not be attributed to any of the institutions that I am or have been affiliated with.

If asked whether a graduating high school senior should get a job and earn money right away, or attend college, most people would answer attend college. Nevertheless, the former rule—rapid assimilation versus long-term growth—dominates discussions of the economic benefits of immigration policies. On the surface, employment-based immigrants appear to be more valuable to the U.S. economy than family-based immigrants because of their relatively high earnings and because their occupational skills respond to the current needs of particular industries. Yet, because of their high propensity to invest in human capital, kinship-based immigrants provide the U.S. economy a highly malleable resource that promotes a vibrant economy in the long run.

A High Propensity of Family-Based Immigrants to Invest in Human Capital

Human capital is the knowledge and training of the labor force. Key determinants of the long run success of any economy are the amount of human capital it possesses and the flexibility of this human capital.

Individuals increase their human capital by pursuing academic and vocational schooling and through on-the-job and off-the-job training. To invest in human capital, individuals must expend time and effort. Whether they pursue additional schooling or training depends on the return they expect from the investment and how much they have to give up to undertake the additional training or schooling—its "opportunity cost." Ceteris paribus, the lower the opportunity cost of human capital investment, the greater the propensity to invest in human capital. The wages one foregoes while pursuing training or schooling are a key component of the opportunity cost of human capital investment.

Employment-based immigrants enter the U.S. to fill specific jobs as expressed by an employer's willingness to participate in a labor certification process. By the very nature of their admission, these immigrants have specific skills that are immediately valued in the U.S. labor market. Their opportunity cost of leaving work or working less to pursue new schooling or training is high. A native-born aerospace engineer well launched into his career or an immigrant with highly transferable skills allowing him to immediately pursue a job in his field, would be reluctant to undertake training in another field. This would be true even if the training facilitated an ultimately better paid line of work because of the lost wages that such training would incur.

The low opportunity cost for a family-based immigrant who could not initially transfer his home-country human capital, paired with the value of this undervalued human capital in producing new human capital, makes pursuing further training an attractive option. Because they face a lower opportunity cost of human capital investment, family-based immigrants should theoretically have a higher propensity to invest in human capital than either U.S. natives or employment-based immigrants.

Greater permanence among immigrants who enter the U.S. via family ties should also increase their propensity to invest in human capital: home is where one's family is. Indeed

permanence is a prerequisite for investing in human capital that is relevant to the U.S. Why invest if the rewards of the investment cannot be reaped?

Empirical evidence supports the theoretical expectation that family-based admissions are associated with a high propensity to invest in human capital. Earnings growth is a sign that human capital investment is taking place. Family-based immigrants have low initial earnings but high earnings growth; occupation-based immigrants have high initial earnings but low earnings growth (Duleep and Regets, 1996a, b; 1992b). Immigrant earnings patterns characterized by low initial earnings and high earnings growth are associated with high rates of schooling, training, and occupational change (Duleep and Regets 1999, 2002, Green 1999, Akresh 2007). Such findings confirm a key characteristic of recent, predominantly family-based immigrants—a high propensity to invest in human capital.

Economic Benefits of the High Propensity of Family-based Immigrants to Invest in Human Capital

The high earnings growth of family-based immigrants should attenuate concerns about their relatively low entry earnings. Moreover, this high propensity to invest in human capital yields benefits to the U.S. economy beyond immigrants' own earnings growth.

The higher incentive of family-based immigrants to invest in human capital pertains not only to U.S.-specific human capital that restores the value of specific source-country human capital (the foreign-born aeronautical engineer who learns English so that he can pursue aeronautical engineering again), but to new human capital investment in general. When demand shifts requiring new skills to be learned, family-based immigrants who initially lacked U.S.-specific skills (as opposed to employment-based immigrants with highly transferable skills) will be more likely to pursue the new opportunities than will natives or immigrants with highly transferable skills.

Thus, compared to U.S. natives and to employment-based immigrants, a benefit of family-based immigrants is a high rate of human capital investment in a broad range of human capital. This gives such immigrants greater ability to adapt to changing skill needs in the economy, adding significant flexibility to the U.S. economy.

In a similar vein, family admissions may foster innovation. In deciding whether to develop a new product or service, potential entrepreneurs examine the costs and returns of pursuing such an activity. A crucial cost of any new venture is training the workforce that will create the new product or service. New businesses (and changes in existing businesses) require people who are willing to acquire new human capital. Immigrants who enter to fill specific jobs, and are paid accordingly, would have less of an incentive to invest in new human capital.

Policies that bring in immigrants lacking immediately transferable skills—such as family-based admission policies—may promote new business formation (or new directions in existing businesses) by providing a labor supply that is both willing and able to invest in new skills. An entrepreneur in an area or time period with such immigrants will have a relative advantage in launching an innovation.

Family Admissions Promote Immigrant Entrepreneurship

Family-based policies, as opposed to policies to fill specific short-run skill needs, nurture informal human capital investment in immigrant communities and immigrant entrepreneurship.

The research of Khandewal (1996), Jiobu (1996), and Kim and Hurh (1996) provides case-study evidence of extended families and close-knit immigrant communities, fostered by kinship ties, supporting immigrant investment activities. Portes and Bach (1985), Waldinger (1986), Bailey (1987), and Gallo and Bailey (1996) document an immigrant sector in various industries characterized by mutually beneficial arrangements in which recent immigrants working as unskilled

laborers at low wages (or even no wages) in immigrant-run businesses are provided training and other forms of support eventually leading to more skilled positions.

The existence of close-knit communities, fostered by kinship-based admissions, facilitates immigrant entrepreneurial activities (Bonacich and Modell, 1980; Kim et al., 1989; Light, 1972). Anecdotal and case-study evidence suggests that immigrant self-employment occurs within small concentrated pockets defined by ethnic identity and business activity. The clustering of entrepreneurial activities by ethnic group, geographic area, and detailed industry suggests that members of close-knit immigrant communities aid entrepreneurial activities. Local survey information indicates that such help comes not only in the form of financial assistance, but perhaps more importantly from the sharing of information (Waldinger, 1989; Kim and Hurh, 1996).

Statistical evidence confirms a strong link between admission criteria and immigrant entrepreneurship. Duleep and Regets (1996a) estimate a positive and highly statistically significant relationship between the propensity of individual immigrants to be self-employed and the percent of their cohort that gained admission through the siblings' admission category. For the two largest immigrant groups, Asians and Hispanics, the positive effect of siblings on immigrant self employment dwarfs the impact of all other variables.

The cohesiveness of immigrant enclaves, fostered by kinship admissions, supports the development of certain types of businesses. Ethnic enclave entrepreneurs will have an advantage in developing businesses where the cost of an employee performing below a certain level would be catastrophic for the firm. This would be true for small firms (the smaller the firm, the greater the share of each employee to the firm's total work force and the more difficult it becomes for other employees to fill in for a delinquent employee), firms characterized by highly interconnected processes (the more interconnected a process is, the more damage a poor employee or contractor can cause), and firms with low profit margins (the lower the profit margin, the more likely that a poor employee could cause the firm to go out of business).

These are in fact the characteristics of immigrant enclave enterprises as depicted in case-study analyses. Enclave enterprises are most likely to be small businesses (Bates, 1996). They have also been documented in businesses that require highly interconnected processes or long lines of transactions. An example is the early 20th-century Japanese immigrants' development of specialty crops on marginal lands (Jiobu, 1996). Enclave hiring is also more likely to occur in businesses with low profit margins (Bates, 1996). Kim and Hurh, (1996) describe Korean immigrants going into low-income minority areas to start businesses in Chicago. Bonacich and Light (1988) describe an extensive presence of Korean-owned businesses, particularly small scale retailing, in low-income Hispanic and African-American communities that is revitalizing deteriorating areas of inner-city Los Angeles. Waldinger (1986) documents extensive firm development and growth among New York City Chinese immigrants in a declining industry sector, garment manufacturing.

This suggests that family-based immigration fosters the development of businesses that would not otherwise exist.

Family Admissions and the Labor Market Effects of Immigration on Natives

The preceding sections suggest three ways that family-based immigrants may either pursue or foster employment opportunities that are distinct from the employment opportunities of U.S. natives. (1) When demand shifts requiring new skills to be learned, immigrants who initially lacked U.S.-specific skills will be more likely to pursue the new opportunities than others. (2) They also encourage new business formation (or new directions in existing businesses) by providing a labor supply that is both willing and able to invest in new skills. (3) Immigrants lacking readily transferable skills and enclaves composed of such immigrants foster the

development of businesses that would not otherwise exist. In these respects, skill dissimilarity is a virtue.

Lindsay Lowell (1996) comments: "Skill [employment]-based immigrants, in part because their admission depends on formal links to U.S. employers..., may enter directly into job competition with U.S. workers.... Conversely, the nature of the jobs that are initially filled by family-based immigrants, precisely because they are not as tightly linked to the primary labor market may mean that family-based immigrants compete less with U.S. workers."

Empirical evidence buttresses Lowell's speculation on the impact on natives' employment of family-based versus employment-based immigration. Sorensen (1996) analyzed how the relative size of different admission-status immigrant groups in each SMSA affected the earnings and employment of native workers. Controlling for standard human-capital characteristics, such as education and years of work experience, Sorensen finds only small effects of immigration on the earnings and employment of natives when she combines all categories. Dividing by admission status, immigrants admitted because of occupational skills (employment-based immigrants) have a small but statistically significant negative effect on the employment opportunities of native-born white males. According to Sorensen, the estimated negative effect "implies that employment-related immigrants have skills that bring them into direct competition with white native males. This suggests that substantially increasing employment-related immigration may have small negative effects on the labor market opportunities [as measured by earnings and employment] of white native males." In contrast, family-preference immigrants have a statistically significant positive effect on the earnings and employment of U.S.-born whites and on the earnings of U.S.-born blacks.

Family-Based versus Employment-Based Immigration

Family visas are also an important complement to high skilled visas and only compete if they are placed under the same arbitrary cap. High skilled immigrants have families too. By making the U.S. a less attractive destination for high-skilled immigrants, efforts to restrict family admissions may yield unintended outcomes.

In a study of the association between admission criteria and the education levels of immigrants, we found positive correlations between immigrant education levels and the percent of immigrants admitted on the basis of occupational skills. We also found positive and significant correlations between immigrants' education levels and the percent of immigrants admitted as siblings (Duleep and Regets, 1996a). Taken literally, these results suggest that increasing admissions on the basis of occupational skills and increasing the admissions of siblings would increase immigrant education levels. A possible explanation for these findings is that immigrants who gain admission on the basis of occupational skills are followed by their siblings. If those who enter on the basis of occupational skills are highly educated, it is likely that their siblings are also highly educated.

On average the educational level of immigrants who enter via occupational skills exceeds that of family-based immigrants. In contrast to admission criteria per se and country of origin that have initial but not long-run effects on immigrant earnings, education confers an earnings advantage that persists over the life cycle of immigrants. Indeed, for adult immigrants younger than 40, the effect of education on earnings is most apparent in the long run. For instance, the initial earnings of the more educated immigrants exceed the earnings of less educated immigrants by 30 percent. Ten years later, the earnings of the more educated are double those of the less educated (Duleep, 2007). Education may also increase the propensity to invest in human capital among immigrants initially lacking transferable skills (Duleep and Regets, 2002).

If we want to increase the education level of entering immigrants, a more effective approach for achieving this, than increasing occupational admissions, would be to give points for

both kinship ties and educational level both of which appear to yield economic benefits for immigrant economic assimilation and a dynamic economy.

In terms of increasing intergenerational educational growth, historically, groups that were permanently attached to the U.S. showed greater intergenerational progress in educational attainment than groups who were less attached. From this perspective, policies that encourage permanent immigration, such as kinship admissions, should be encouraged; policies that inhibit extended families deter the establishment of permanent communities.

Conclusion: Focusing on the Long Term

In contrast to policies that reward specific employment skills or other attributes fostering quick earnings adjustment, the predominant U.S. immigration policy is family unification. Though the initial earnings of family-based immigrants are below those of employment-based immigrants, a compelling array of research suggests that earnings differences that stem from variations in skill transferability dissipate with time in the United States: Duleep and Regets (1992a, b 1994a, b, 1996a, b, c, 1997a, b), Jasso and Rosenzweig (1995) and others provide evidence that as immigrants live, learn, and earn in the U.S., the earnings of comparably educated immigrant men converge regardless of their admission status. Furthermore, family-investment strategies may help offset the low earnings of immigrant men who initially lack skills for which there is a demand in the host-country labor market (Duleep and Sanders, 1993; Beach and Worswick, 1993; Ngo, 1994; Baker and Benjamin, 1994; and Duleep, 1998). Extended families and close-knit immigrant communities nurtured by family admissions aid the adjustment of immigrants who initially lack U.S.-specific skills. Thus, viewed from a life cycle, family, and perhaps community/ethnic-group perspective, initial earnings differences associated with admission status per se may not be of great importance.

Moreover, by looking beyond immigrants' initial earnings and considering their high levels of human capital investment, economic advantages emerge that are associated with family-based immigrants.

Family-based immigrants benefit the U.S. economy by developing areas and businesses that would not otherwise be developed. Immigrants who initially lack transferable skills are more likely to invest in new human capital than are natives or immigrants with skills that readily transfer to the host economy. Family-based admission policies, which bring in immigrants lacking immediately transferable skills, provide an infusion of undervalued human capital that increases the supply of flexible human capital. A flexible labor supply that is willing and able to invest in new skills facilitates innovation and accompanying entrepreneurship. Family-based immigration also fosters the development of immigrant employment that is distinct from native-born employment thereby reducing employment competition with natives. Those who enter via kinship ties are more likely to be permanent and permanence confers a variety of societal goods. For poorly educated immigrants, programs that foster long-term investment in human capital and permanence (as opposed to temporarily filling labor shortages) foster upwardly mobile immigrant communities.

Policy analysts generally think of U.S. immigration policy as serving two separate purposes. The principal goal is to unite families; a secondary goal is to meet labor market needs. Tailoring immigration to labor shortages is theoretically appealing, but difficult in practice. Admission based on kinship is often considered detrimental to the U.S. economy but justified on humanitarian grounds. Yet, precisely because they lack specific skills that are immediately valued by the U.S. labor market, family-based immigrants meet labor market needs in an ongoing, flexible fashion that contributes to a vibrant economy and, at the same time, fosters permanence with its associated benefits. As U.S. policy makers put more emphasis on the economic effects of immigrants, an alternative route would be to focus on long-term goals.

References

Aldrich, Howard, Roger Waldinger, and Robin Ward. 1990. *Ethnic Entrepreneurs*. Newbury Park, CA: Sage.

Bailey, Thomas R., *Immigrant and Native Workers: Contrasts and Competition*, Conservation of Human Resources, Boulder and London: Westview Press, 1987.

Baker, Michael and Dwayne Benjamin, "The Role of the Family in Immigrants' Labor Market Activity: An Evaluation of Alternative Explanations," paper presented at the annual meeting of the Canadian Economics Association, May 1994.

Bates, Timothy. 1996. "Determinants of Survival and Profitability among Asian Immigrant-owned Small Businesses," in *Immigrants and Immigration Policy: Individual Skills, Family Ties, and Group Identities*, HO Duleep, PV Wunnava, eds. Greenwich, Conn.: JAI Press.

Beach, Charles M. and Christopher Worswick, "Is There a Double-Negative Effect on the Earnings of Immigrant Women?" *Canadian Public Policy*, vol. 19, no. 1, 1993, pp. 36-53.

Bonacich, Edna, and Ivan Light. 1988. *Immigrant Entrepreneurs: Koreans in Los Angeles 1965-1982*. Berkeley: University of California Press.

Bonacich, Edna and John Modell, *The Economic Basis of Ethnic Solidarity: Small Business in the Japanese-American Community*, Berkeley, Calif: Univ. of California Press, 1980

Chiswick, Barry R., "The Effect of Americanization on the Earnings of Foreign-Born Men," *Journal of Political Economy*, October 1978, pp. 897-922.
--, "The Economic Progress of Immigrants: Some Apparently Universal Patterns," in William Fellner, editor, Washington, D.C.: American Enterprise Institute, 1979, pp. 359-399.

Duleep, Harriet Orcutt. 1998. "The Family Investment Model: A Formalization and Review of Evidence from Across Immigrant Groups," *Gender Issues*, vol. 16, no. 4, Fall, pp. 84-104.
--, 2007, "Immigrant Skill Transferability and the Propensity to Invest in Human Capital," *Research in Labor Economics*, 2007, vol. 27.

Duleep, Harriet Orcutt and Daniel Dowhan. 2002. "Insights from Longitudinal Data on the Earnings Growth of U.S. Foreign-born Men." *Demography* 39: 485-506.

Duleep, Harriet Orcutt and Mark C. Regets. 1992a. "The Elusive Concept of Immigrant Quality." Paper presented at the Annual Meeting of the American Economic Association.
—.1992b "Some Evidence on the Effect of Admission Criteria on Immigrant Assimilation," in *Immigration, Language and Ethnic Issues: Canada and the United States*, Barry Chiswick (ed.). Washington, D.C.: American Enterprise Institute, pp. 410-439.
—. 1996a. "Family Unification, Siblings, and Skills," in Harriet Duleep and Phanindra Wunnava (eds.), *Immigrants and Immigration Policy: Individual Skills, Family Ties, and Group Identities*, Greenwich, CT: JAI Press.
—. 1996b. "Admission Criteria and Immigrant Earnings Profiles," *International Migration Review*, Summer.
—. 1997a. "The Decline in Immigrant Entry Earnings: Less Transferable Skills or Lower Ability?" *Quarterly Review of Economics and Finance*, 37, Special Issue on Immigration, pp. 189-208.
—. 1997b. "Measuring Immigrant Wage Growth Using Matched CPS Files." *Demography* 34 (2) May, pp. 239-249.
—. 1999. "Immigrants and Human Capital Investment," *American Economic Review*, May, pp. 186-191.

—. 2002. "The Elusive Concept of Immigrant Quality: Evidence from 1970-1990," IZA Discussion Paper, no. 631.

Duleep, Harriet Orcutt and Seth Sanders. 1993. "The Decision to Work by Married Immigrant Women." *Industrial & Labor Relations Review* 46 (4) July, pp. 677-690.

Fawcett, James T., Benjamin V. Carino, Insook Han Park, and Robert W. Gardner, "Selectivity and Diversity: The Effects of U.S. Immigration Policy on Immigrant Characteristics," paper presented at the Annual Meeting of the Population Association of America, 1990.

Gallo, Carmenza and Thomas R. Bailey. 1996. "Social Networks and Skills-Based Immigration Policy," in Harriet Duleep and Phanindra V. Wunnava (editors), *Immigrants and Immigration Policy: Individual Skills, Family Ties, and Group Identities*, Greenwich, CT: JAI Press.

Green, David A., "Immigrant Occupational Attainment: Assimilation and Mobility Over Time," *Journal of Labor Economics*, vol. 17, no. 1, January 1999, pp. 49-79.

Jasso, Guillermina and Mark R. Rosenzweig. "Do Immigrants Screened for Skills Do Better than Family-Reunification Immigrants?" *International Migration Review*, vol. 29, no. 1, 1995, pp. 85-111.

Jiobu Robert M. 1996. "Explaining the Ethnic Effect," in *Immigrants and Immigration Policy: Individual Skills, Family Ties, and Group Identities*, HO Duleep, PV Wunnava, eds. Greenwich, Conn.: JAI Press.

Khandelwal, Madhulika, "Indian Networks in the United States: Class and Transnational Identities," in *Immigrants and Immigration Policy: Individual Skills, Family Ties, and Group Identities*, HO Duleep, PV Wunnava, eds. Greenwich, Conn.: JAI Press.

Kim, Kwang Chung and Won Moo Hurh. 1996. "Ethnic Resources Utilization of Korean Immigrant Entrepreneurs in the Chicago Minority Area," in *Immigrants and Immigration Policy: Individual Skills, Family Ties, and Group Identities*, HO Duleep, PV Wunnava, eds. Greenwich, Conn.: JAI Press.

Kim, Kwang Chung, Won Moo Hurh, and Marilyn Fernandez, "Intra-Group Differences in Business Participation: Three Asian Immigrant Groups," *International Migration Review*, Spring 1989, pp. 73-95.

Light, Ivan, *Ethnic Enterprises in America: Business and Welfare Among Chinese, Japanese, and Blacks*, Berkeley, Calif: Univ. of California Press, 1972.

Lowell, B. Lindsay. 1996."Skilled and Family-Based Immigration: Principles and Labor Markets " in *Immigrants and Immigration Policy: Individual Skills, Family Ties, and Group Identities*, HO Duleep, PV Wunnava, eds. Greenwich, Conn.: JAI Press.

Morrissey, Michael, Colleen Mitchell, and Anne Rutherford, *The Family in the Settlement Process*, Bureau of Immigration Research, Canberra: Australian Government Publishing Service, 1991.

Portes, Alejandro and Robert L. Bach, *Latin Journey: Cuban and Mexican Immigrants in the United States*, Berkeley: University of California Press, 1985.

Schultz, Theordore W. 1975. "The Value of the Ability to Deal with Disequilibria," *Journal of Economic Literature*, Vol. 13, no. 3, September, pp. 827-846.

Sorensen, Elaine. 1996. "Measuring the Employment Effects of Immigrants with Different Legal Statuses on Native Workers," in Harriet Duleep and Phanindra V. Wunnava (eds.), *Immigrants and Immigration Policy: Individual Skills, Family Ties, and Group Identities*, Greenwich, CT: JAI Press.

Waldinger, Roger. 1986. *Through the Eye of the Needle: Immigrant Enterprise in New York's Garment Trades*, New York, N.Y.: New York University Press.
---, "Structural Opportunity or Ethnic Advantage? Immigrant Business Development in New York," *International Migration Review*, Spring 1989, pp. 48-72.

Ms. LOFGREN. Thank you very much.

Professor Hing?

TESTIMONY OF BILL ONG HING, PROFESSOR OF LAW AND ASIAN AMERICAN STUDIES, UNIVERSITY OF CALIFORNIA-DAVIS

Mr. HING. Thank you, Madam Chair.

The history of preferring relatives or kinship categories actually goes way beyond before 1965. In fact, part of the national origins quota system, the preference was for families. In 1921, siblings, parents, wives, children were all part of the preferences in 1921.

So when the 1965 act eliminated the national origins quota system, it really continued the family preference in our immigration laws. So I do want to emphasize that in the historical context.

And I also want to address the allegation of chain migration today and some of the racial implications behind the proposals to eliminate family categories and some of the benefits.

So after 1965, Asians, for example, were not expected to benefit from the 1965 immigration act because, in fact, family would favor people who are here in large numbers, and there were not a large number of Asian-Americans in the United States in 1965.

So slowly, the employment categories and eventually, yes, the family categories were used over time.

So today, as we know, 90 percent of the immigrants that come into the United States are family-oriented. And it is rather curious that the attack on families began at a time in the 1980's when Latinos and Asians benefit the most from these categories.

So the complaint of being nepotistic, of being vertical as opposed to horizontal, are not new. And I was privileged in 1979 and 1980 to be part of the staff advisory group of the Federal Select Commission on Immigration and Refugee Policy when, in fact, the family issue was raised again.

And one of the members of the select commission, Arizona Democratic Senator Dennis DeConcini, responded in this manner: "Proposals have been offered to eliminate these family preferences. It is felt by some to be too generous as it refers to horizontal rather than vertical. But to deny that brothers and sisters are an integral part of the family is to impose upon many ethnic groups a narrow concept of family and one that especially discriminates against Italian-Americans. We also should stress the rights of U.S. citizens by allowing them to bring their families to America. This view should precede the technical notion that we need certain types of specialists and skilled workers."

The select commission itself concluded the reunification of families should remain one of the foremost goals of immigration, not only because it is a humane policy, but because bringing families back together contributes to the economic and social welfare of the U.S.

Benefits from the unification of immediate relatives are especially true because family unity promotes stability, health and productivity of family members.

We need not place family reunification in opposition to economic and employment visas. There is not an inherent tension, as some

have claimed. There is only a tension if we place them in opposition to each other.

If instead we view the two systems as complementary ways of achieving and reflecting our goals and values as a society, then we don't have a problem.

In other words, if for the sake of argument we use immigration to help our economy to promote the social welfare of the country and to promote social family values, then family and employment categories together can meet those goals.

One of the things that I do want to emphasize is the allegation of chain migration. And if chain migration were as hysterical as some claim, then we would see hundreds and hundreds of people flowing in from one category.

But in fact, if you look at the history of how family immigration was used, there are times in different nations' and nationalities' histories where family reunification is completed.

That is why when it came shortly after the 1965 act that European immigration began to ebb. Those decisions are made, even today, in Asian immigration categories.

If you look at the facts, Korean immigration numbers have declined. Chinese immigration numbers have declined. The demand, believe it or not, for Filipino immigration has declined.

Those hard decisions of when families remain, and which ones stay, and which ones go back are made over a period of time, and the chain migration that is alleged ends, because families make those choices.

So finally, I would say that this is a Nation of immigrants, but this is a Nation that loves to debate immigration policy, as we know, but when it comes to families, there shouldn't be a debate, because this is about family values that we all believe in. Thank you.

[The prepared statement of Mr. Hing follows:]

PREPARED STATEMENT OF BILL ONG HING

INTRODUCTION

The current family-based immigration system should be retained, its numbers should be expanded, and a re-orientation of the manner of family visas should be instituted so that backlogs are reduced. Why?

- Family reunification promotes strong family values for our nation.
- Family immigration has been the backbone of economic contributions made by immigrants in the last century.
- Reunification with family members gives new Americans a sense of completeness and peace of mind, contributing not only to the economic but also the social welfare of the United States. Society benefits from the reunification of immediate families, especially because family unity promotes the stability, health and productivity of family members.
- Family immigrants generally are working age who immediately become productive taxpayers who immediately begin supporting institutions like the Social Security system.
- Immigrant families often pool their resource to start small businesses that provide new jobs for native workers.
- We risk sending a strong anti-family message if we reduce rather than expand family immigration opportunities.
- The attack on family immigration categories sends a wrong message to communities of color—Asian and Latinos—who rely on the family categories to complete family reunification and stabilize their families.

- Our families make us whole. Our families define us and human beings. Our families are at the center of our most treasured values. Our families make the nation strong.

Promoting family reunification has been a major feature of immigration policy for decades. Prior to 1965, permitting spouses of U.S. citizens, relatives of lawful permanent residents, and even siblings of U.S. citizens to immigrate were important aspects of the immigration selection system. After the elimination of the racist national origins quota system in the 1965 reforms, family reunification became the cornerstone of the immigration admission system.

Like his predecessors, Harry Truman and Dwight Eisenhower, President John Kennedy assailed the national origins quota system for its exclusionary impact on prospective immigrants from southern and eastern Europe and Asia. Although President Kennedy's reform goals (ultimately pushed through by President Lyndon Johnson after Kennedy's assassination) initially envisioned a first-come, first-served egalitarian system, the reform effort evolved into a category-oriented proposal that was enacted. The 1965 immigration amendments allowed twenty thousand immigrant visas for every country not in the Western Hemisphere. Of the 170,000 immigrant visas set aside for Eastern Hemisphere immigrants, about 80 percent were specified for "preference" relatives of citizens and lawful permanent residents, and an unlimited number was available to immediate relatives of U.S. citizens. The unlimited immediate relative category included spouses, parents of adult citizens, and minor, unmarried children of citizens. The family preference categories were established for adult, unmarried sons and daughters of citizens (first preference), spouses and unmarried children of lawful permanent resident aliens (second preference), married children of citizens, and siblings of citizens (fifth preference). Third and sixth preferences were established for employment-based immigration.

As Asian and Latin immigrants began to dominate the family-based immigration system, somehow the emphasis on family reunification made less sense to some policy makers. Since the early 1980s, attacking family reunification categories—especially the sibling category—has become a popular sport played every few years. Often the complaint is based on arguments like, "shouldn't we be bringing in *skilled immigrants,*" or "wouldn't a point system" be better, or a system based on family relationships is "nepotistic," or in the case of the sibling category, brothers and sisters "aren't part of the nuclear family" or the category represents "vertical as opposed to horizontal immigration."

By 1976, a worldwide preference system (which included Western Hemisphere) quota of 270,000 was in place that continued to reserve 80 percent for kinship provisions, and the category of immediate relatives of the United States citizens remained numerically unlimited. The effects of this priority were demonstrated vividly in the subsequent flow of Asian immigration, even though nations such as those in Africa and Asia, with low rates of immigration prior to 1965, were handicapped. In other words, the nations with large numbers of descendents in the United States were expected to benefit from a kinship-based system, and in 1965, less than a million Asian Americans resided in the country. Although the kinship priority meant that Asians were beginning on an unequal footing, at least Asians were on par numerically, in terms of the per country quotas. Gradually, by using the family categories to the extent they could be used and the labor employment route, Asians built a family base from which to use the kinship categories more and more. By the late 1980s, virtually 90 percent of all immigration to the United States—including Asian immigration—was through the kinship categories. And by the 1990s, the vast majority of these immigrants were from Asia and Latin America.

ATTACKING FAMILIES

Once Asian and Latin immigrants began to dominate the family immigration categories, the kinship system was assailed. Consider the following attack in 1986:

> Nowhere else in public policy do we say not "who are you and what are your characteristics?" but ask rather, as we do in immigration, "who are you related to?" Current policy says: "if you have the right relatives, we will give you a visa; if you don't have the right relatives, well, it is just too bad." [1]

Arguing that the system was nepotistic or that the country would be better off with a skills-based system became popular. The following like-minded statement

[1] Testimony of Barry R. Chiswick before the Joint Economic Committee, Congress of the United States, S. Hrg. 99–1070, May 22, 1986, p. 236. Of course this statement was factually incorrect; even under the system at the time, prospective immigrants with skills needed by an employer could qualify for a labor employment category.

also from the mid-1980s about undocumented migration reveals the racial nature of the complaint:

> If the immigration status quo persists, the United States will develop a more unequal society with troublesome separations. For example, some projections indicate that the California work force will be mostly immigrants or their descendants by 2010. These working immigrants, *mostly nonwhite* will be supporting mostly white pensioners with their payroll contributions. *Is American society resilient enough to handle the resulting tensions.*
>
> . . .
>
> The American economy will have more jobs and businesses if illegal alien workers are allowed to enter freely and work in the United States. But the number of jobs and businesses alone is not an accurate measure of the soundness of economic development or *quality of life.* Tolerating heavy illegal immigration introduces distortions into the economy that are difficult to remedy, while imposing environmental and *social costs* that must be borne by the society as a whole.[2]

Apparently, this perception of a good "quality of life" without "environmental and social costs" is one with minimal tension from the presence of "nonwhite" "immigrants or their descendants." As an observer at the time recognized, "It may be fair to conclude that the problem masquerading as illegal immigration is simply today's version of a continuing American—in fact, human—condition, namely xenophobia."[3] As in the Asian exclusionary era, the complaints were not simply about the economy; they were about keeping people out who did not fit the right image.

From the early 1980s to 1996, the leading voice attacking family immigration, especially the sibling category, was Republican Senator Alan Simpson of Wyoming. Simpson had been a member of the Select Commission on Immigration and Refugee Policy that issued a report in 1981 calling for major changes in the immigration laws. After IRCA was enacted in 1986 to address issue of undocumented migration through employer sanctions and legalization, Simpson turned his attention to legal immigration categories. At the time, although 20 percent of preference categories were available to labor employment immigrants (54,000), when the unrestricted immediate relative immigration categories were added to the total number of immigrants each year, less than 10 percent of immigrants who were entering each year were doing so on the basis of job skills.

In fact, soon after the Select Commission report, Senator Simpson proposed the elimination of the sibling immigration category. At the core of what became a long crusade, Simpson's complaint was that brothers and sisters are not important relatives for immigration purposes; that in U.S. culture, the sibling relationship is simply not close enough to justify providing an immigration preference. He ignored the many experts who testified in hearings before the Select Commission stressing the importance of family reunification over employment-based visas, including the sibling category. Demographer Charles Keely testified that:

> We, as a nation, cannot only accept, but are enriched in countless ways, by traditions which honor the family and stress close ties not only within the nuclear family of spouses and children but also among generations and among brothers and sisters. Attacks on family reunification beyond the immediate family as a form of nepotism are empty posturing.[4]

The Mexican American Legal Defense and Education Fund, the League of United Latin American Citizens, the U.S.-Asia Institute, and others testified in favor of retaining the category. One organization opposing Simpson's proposal, The American Committee on Italian Migration, noted:

> For Italians and for many other ethnic groups, brothers and sisters, whether or not they are married, are an integral part of the family reunion concept. Elimination of this preference category would violate a sacrosanct human right of an American citizen to live with his family according to his own traditional life style.[5]

Arizona Democratic Senator Dennis DeConcini, also a member of the Select Commission, added his voice to the debate:

---

[2] Martin, Philip, *Illegal Immigration and the Colonization of the American Labor Market,* Center for Immigration Studies, 1986, at 45. (emphasis added)

[3] Annelise Anderson, *Illegal Aliens and Employer Sanctions: Solving the Wrong Problem,* Hoover Essays in Public Policy, The Hoover Institution, Stanford, Ca., 1986, at 21.

[4] SCIRP 1981d:48.

[5] U.S. Senate Committee on the Judiciary 19a: 19, 170.

> Proposals have been offered to eliminate the [sibling] preference. It is felt by some to be too generous, as it refers to horizontal rather than a vertical family concept. . . . But to deny that brothers and sisters are an integral part of the family is to impose upon many ethnic groups a narrow concept of family and one that especially discriminated against the Italian-Americans. We also should stress the rights of U.S. citizens by allowing them to bring their families to America. This view should precede the technical notion that we need certain types of specialist and skilled workers.[6]

In fact, the Select Commission overwhelmingly endorsed the policy of keeping brothers and sisters as a preference category.[7] Proposals to eliminate family categories created by the 1965 amendments were to be rejected.

> The reunification of families should remain one of the foremost goals of immigration not only because it is a humane policy, but because bringing families back together contributes to the economic and social welfare of the United States. Society benefits from the reunification of immediate families, especially because family unity promotes the stability, health and productivity of family members.[8]

Simpson did not relent and in the late 1980s at a time when legal immigration continued to be dominated by Asians and Latinos even after "diversity programs" were being implemented to aid non-Asian and non-Mexican immigrants, he wanted the family immigration numbers reduced or at least managed. S. 358 was approved by the Senate in July 1989, which would establish a ceiling of 630,000 legal immigrants for three years. Of the total, 480,000 would be reserved for all types of family immigration and 150,000 would be set aside for immigrants without family connections but with skills or job related assets. Yet after numerous markups and hearings, the House of Representative passed Congressman Bruce Morrison's H.R. 4300, a rather different bill, on Oct. 3, 1990. The bill actually would reduce family immigration more dramatically—thereby reducing the number of Asian and Latino family immigrants, providing 185,000 family-based visas and 95,000 employment-based visas annually.

The bill was attacked for its wholesale elimination of temporary work visas for professionals. The concern was that the spigot actually might be closed on foreign workers. Also, the possible elimination of H-1 nonimmigrant status for certain professions outraged immigration lawyers, who called it a "must-kill" provision. Another one of Morrison's more controversial suggestions was to tax employers who use alien employees. One early proposal required businesses to pay 15 percent of an alien's salary into a federal trust fund used to train U.S. workers. As introduced, the bill would impose a flat user fee dependent on the size of the company. After furious negotiations, especially with fellow Democratic Congressman Howard Berman from Los Angeles, Morrison agreed to drop proposals that would have reduced the number of family based visas, persuaded by Berman who argued: "To cut back on the ability of new Americans to be with their family members betrays the core American value and tradition of emphasizing the integrity of the family."[9]

As passed, H.R. 4300 would increase the number of legal immigrants to 775,000 a year from the prior 540,000. It would also speed the process of uniting families, attract more skilled workers and create a new diversity category for immigrants from countries whose nationals have largely been excluded in the past. After passing the bill, the House changed the bill number to S. 358 to enable it to go to a joint House-Senate conference. However, many were opposed to the more liberal House bill and negotiated to cap legal immigration and place new measures to control illegal immigration, including tougher provisions against criminal aliens. The House conferees insisted on a sunset cap in the bill and wanted extra visas to go to relatives rather than to skilled workers. But Senator Simpson refused to agree.

Enacted on Oct. 26, 1990, the compromise bill would allow 700,000 immigrants from 1992–94 and 675,000 annually in subsequent years.[10] For the time being, pro-

---

[6] Address in 1978 to the American Committee on Italian Migration, reported in Immigration Update National Symposium, New York, 1980.

[7] SCIRP 1981a: 119.

[8] Select Commission on Immigration and Refugee Policy Report (SCIRP): 1981b: 357.

[9] Stewart Kwoh, *Los Angeles Times,* Sept. 14, 1989.

[10] The compromise included portions of S. 3055 sponsored by Simpson, which would speed deportations of criminal aliens. Section 501 expanded the definition of "aggravated felony" to include illicit trafficking in any controlled substance, money laundering, and any crime of violence with a 5 year imprisonment imposed. The bill also included both federal and state crimes. Aliens

Continued

posals to cut back on family immigration were defeated, and the Immigration Act of 1990 had responded to lobbying efforts by American businesses. The Act was a significant, and to some a revolutionary, revision of the focus of U.S. immigration law. After passage of the Act, although the main thrust of immigration law continued to be family immigration, highly-skilled immigrations would be deliberately encouraged to resettle in the United States more than ever before. In the long run, the number of employment based visas would nearly triple from 54,000 to 140,000 per year.

While the Asian- and Latino-dominated family categories were not reduced in 1990, an overall numerical cap was installed. Furthermore, in the words of Senator Simpson, through the new employment categories and expanded diversity programs, "we [now] open the front door wider to skilled workers of a more diverse range of nationalities." [11]

Up to his retirement in 1996, Senator Simpson fought to eliminate the sibling category. On the eve of the 1996 Presidential election, Congress reached a compromise on immigration reform relating to deportation, asylum, and procedural issues. Until the late spring of 1996, however, the chance that the immigration legislation would include revisions to legal immigration categories was real. Senator Simpson again took aim at the siblings-of-U.S.-citizens category and the category available to unmarried, adult sons and daughters of lawful resident aliens (category "2B"). The efforts ultimately were not successful, and the 1996 legislation did not reduce family immigration.

THE FALSE CHOICE BETWEEN FAMILY AND EMPLOYMENT VISAS

As comprehensive immigration reform is debated today, some commentators once again seek to place the family immigration categories on the negotiating table. This attack on family immigration is a variation on the wouldn't-it-better-to-chose-immigrants-based-on-skills theme, by positioning family visas in opposition to employment-based visas:

> There is an *inherent tension* in the immigration system between job and family-based admissions. In allocating visas between family and employment criteria, the goal of family reunification cannot be entirely reconciled with the problem of visas as a scare resource. The answers here are either to accept persistent family migration backlogs or limit the scope of family migration to nuclear, instead of extended, family relationships.[12]

Inherent tension? Of course there is only an "inherent tension" between employment and family-based visas if we choose to accept the premise that visas are a "scarce resource," or if we insist on pitting the two types of visas as oppositional. If instead we view the two systems as complementary ways of achieving and reflecting our goals and values as a society, then we don't have a problem of "tension." In other words, if, for the sake of argument, we use immigration to help our economy, to promote the social welfare of the country, and to promote family values, then family and employment categories together can meet those goals.

The Labor Force Picture

Another problem with placing employment visas in opposition to family visas is the implication that family immigration represents the soft side of immigration while employment immigration is more about being tough and strategic. The wrongheadedness of that suggestion is that family immigration has served our country well even from a purely economic perspective. The country needs workers with all levels of skill, and family immigration provides many of the needed workers.

A concern that the current system raises for some policymakers is related to the belief that the vast majority of immigrants who enter in kinship categories are working class or low-skilled. They wonder whether this is good for the country. Interestingly enough, immigrants who enter in the sibling category actually are generally high skilled. But beyond that oversight by the complainants, what we know about the country and its general need for workers in the short and long terms is instructive.

The truth is that we need immigrant workers of all skill levels today, and we will need them in the future. As of 2004, 21 million immigrants were in the U.S. labor force, representing 14.5 percent of the total labor force. A majority of the immigrant workforce is Mexican or from other Latin countries; foreign-born Asians are one-

---

convicted of aggravated felonies would have expedited deportation hearings and would not be released from custody while in deportation proceedings. 67 IR. 1229–31.

[11] 136 Cong. Rec. S17,109 (daily ed. Oct. 26, 1990) (statement of Sen. Simpson).

[12] Memorandum from Doris Meissner, Nov. 30, 2005 (emphasis added).

quarter of the immigrant workforce. Roughly 6.3 million (30 percent of all foreign-born workers) are undocumented workers. This represents about 4.3 percent of the total U.S. labor force.

In the last few years, the employment of immigrants actually grew while that of native workers was stagnant. This trend is expected to continue because without immigrants, demographers project that the number of workers between the ages of 25 and 54 over the next few decades will decline. This suggests a strong demand for immigrants in a broad variety of industries. Immigrants represent 20 to 22 percent of farm and non-farm laborers. Mexican-born workers are much more likely than native workers to be found in food preparation, building and grounds maintenance, construction, and production jobs. The 2001–2003 recessionary period also represented a restructuring period; immigrants were favored in the declining manufacturing industry, as well as in the leisure/hospitality and construction areas. Professional business services also hired a large number of immigrants, likely due to increased global competition.

Most projections of future immigration suggest that foreign-born workers will play a significant role in the growth and skill composition of the U.S. labor force. The Bureau of Labor Statistics (BLS) projects that the labor force will grow 12 percent (17.4 million) between 2002 and 2012, reaching a total of 162.3 million.

Given projections of slow growth of the native workforce, the levels of immigration used in BLS and other projections imply that immigrants will remain significant drivers of labor force growth. The BLS' most recent projections assume that total immigration, both legal and unauthorized, will continue to bring between 900,000 and 1.3 million people to the country each year until 2012. Barring truly restrictionist policy, it is likely that immigrants will continue to comprise a significant supply of workers under any legislation that is passed. In fact, immigrants have been an important source of labor source growth in the recent past, making up 48.6 percent of the total labor force increase between 1996 and 2000, and as much as 60 percent of the increase from 2000 to 2004.

These projections imply that an immigrant workforce of 19 million is projected to grow to 25 million by 2010, 29 million by 2020, and to 31 million by 2030. Likewise the share of immigrants in the total labor force is predicted to climb from 13 percent in 2000 to 18 percent by 2030, and then remain little changed through 2050. After 2030, the projections indicate little further growth of the immigrant workforce, while much of the ongoing growth of the native workforce is implicitly being driven by the children of immigrants or the second generation.

Calculations by the Urban Institute suggest that if no immigrants entered the country after 2000, the labor force would be nearly 10 million workers smaller by 2015 than if immigration follows current projections. By 2050, the difference between the size of the labor force with immigration and without would be 45 million.

The skill levels demanded by occupations projected to grow over the next several years parallel the educational profile of the labor force, suggesting ongoing demand along the skill spectrum. Every two years, the BLS publishes projections about the future size and shape of the U.S. labor force, and the number of net jobs that will be created or lost in each occupation. The latest projections are for the years 2002 to 2012, and they forecast a slowing in the rate at which the total labor force is growing. However, there is substantial variation in the fortunes of various occupational workforces.

Tomorrow's economy will generate demand for jobs that are different from today's and the skills that workers need will likewise change. The BLS separates out 15 occupations that are projected to have the largest numerical growth and another 15 that are projected to experience the fastest rate of growth. Immigrants make up a significant share of the labor force in many large and fast-growth occupations. Important, the BLS further classifies occupations by the degree of skill required for the job, showing that there will be a demand for both low and high-skilled immigrant workers.

For the forecast large-growth occupations, 11 out of the 15 require only short- or moderate-term on-the-job training, suggesting lower-skilled immigrants could contribute to meeting the demand for these types of jobs. According to the 2000 Census data, immigrants were overrepresented in 4 of these occupations. Immigrants made up 20 percent of janitors and building cleaners, 17 percent of nursing, psychiatric, and home health aides, 13 percent of waiters and waitresses, and 13 percent of cashiers. On the high skill end, 3 large growth occupations—general and operations managers, other teachers and instructors, and postsecondary teachers—require a bachelor's degree or higher and immigrants are especially well poised to contribute to these.

Immigrants are also found in jobs that are expected to be important in serving tomorrow's aging population. Seniors are expected to increasingly generate demand

for medical, home care, and other services, many of which require workers with only on-the-job training. According to analysis of BLS data, 8 of 15 occupations projected to grow most rapidly and several of the occupations projected to have largest absolute growth are medical support occupations including medical records technicians, nursing and home health aides, registered nurses, occupational therapist assistants and aides, personal and home care aides, and the like.

In summary, forecasts of occupational growth suggest that there is likely to be continued strong growth in occupations requiring better educated workers. There will also be a substantial growth of jobs requiring little training and in which immigrants are already well represented. Educational forecasts suggest that throughout the next decade, immigrants are likely to play an important role in restructuring the U.S. labor force.

The aging of the baby boomer generation will slow labor force growth, increase the burden of older, retired persons on younger workers, and create a potential drag on productivity growth. Between 2002 and 2012, persons aged 55 and older are estimated to grow an average of 4.9 percent per year, or nearly quadruple the growth rate of the overall labor force. The number of workers aged 25–54, in contrast, will grow by only 5.1 million workers, or at a rate of 0.5 percent per year. These demographic trends slow the rate of growth of the total prime-age labor force.

The aging of the population will change the dependency ratio—the number of nonworking dependents compared to economically active workers. That ratio is expected to rise as the baby boomer generation enters retirement and as U.S. fertility rates remain low, leaving a greater number of elderly to be supported by each worker. The decreasing number of taxpaying workers supporting each retiree will strain public assistance programs for the elderly including Social Security and Medicare. An infusion of young taxpaying immigrants can help address future shortfalls in these programs.

While the evidence suggests that greater immigration could aid elderly assistance programs, it should not be expected to solve the problem. Increased immigration can temporarily lessen the Social Security and Medicare burden on native workers, but in the longer-run, permanent immigrants will also age into retirement. Further, immigrants are only 12 percent of the U.S. population and current rates of immigration add about 1 million immigrants yearly to an existing base of about 34 million.

Immigration also may boost productivity, because immigrant workers tend to be younger and therefore generally more productive than older workers, but it is unclear how greatly immigration would need to be expanded to significantly enhance productivity. A National Academy of Sciences report in 1997 concluded that immigrants generate a small but positive boost to the gross national product by generating increased returns to capital that are greater than their adverse wage impacts. Some evidence suggests that innovation thrives when human capital is agglomerated in areas with many specialists and skilled migrants. The booming economy of the late 1990s was fueled by historic productivity gains, one-third of which came from information technology (IT), and foreign workers fueled one-quarter of the IT labor force growth. Also, immigrants started about one-third of Silicon Valley's high-tech start ups.

Potential problems created by the aging of the U.S. labor force cannot simply and entirely be solved by more immigration, but budget and productivity shortfalls at least will generate demand for generous numbers of skilled immigrant workers.

Some might argue that strategies other than immigration could be used to meet the country's coming economic needs. For example, the need for high-skilled labor could be met in ways other than increasing the numbers of high-skilled immigrants allowed into the country. High technology jobs could be outsourced to rising centers of technological expertise such as Bangalore or other growing hot spots around the world. Or the United States could devote greater resources to raising the skill level of residents, retraining workers from sunset industries and improving the teaching of skills most relevant to the future economy of the country's youth.

Given the dynamic nature of the economy, the uncertainty of any attempts to predict the needs of tomorrow's economy, and the limited control any government can exert over demographic changes, it is difficult to say with any certainty how immigration can or should be used to meet the needs of the country's coming labor markets. However, it is quite clear that immigration has been an important source of labor force growth in the past, and that the skills required of the occupations important to the future, in both technology and healthcare industries, will likely match reasonably well with the skill profiles of immigrants today and the projected skill profiles of future immigrants. Immigrants currently play a large role in several of the occupations expected to have most growth both in terms of the rate of growth or growth in numbers of workers, and can therefore be expected to contribute to meeting the future demand of these industries. Immigration is not the only answer

to the country's future economic needs, but it could, and likely will, play an important part in a more comprehensive solution.

The Competition Charge

Immigrant workers have long contributed to the power behind the motor of the U.S. economy. However, concerns that immigrants compete with native workers to the latter's detriment still abound in the public mind. A review of the literature about immigration's impact on native wages and job displacement is a starting place to resolve this question. But before doing so, any serious observer has to acknowledge that immigrants affect the economy in ways that are not reflected by wage and job displacement studies. Immigrant entrepreneurship may create jobs; immigrants are increasingly associated with further openings to trade and other forms of exchange; high-skilled immigrants innovate in key sectors of the economy; immigrants make tax contributions and receive public services; the presence of significant numbers of immigrants in a sector helps make that sector's products and services cheaper—and thus more affordable by all consumers; and immigrant workers both produce and, in turn, consume goods and services—thus having much wider ripple economic effects, including creating jobs.

Most economic competition discussions generally focus on the short- and medium-term impacts of immigration. When immigrant workers enter a labor market, there may be initial pains to accommodate them, and in response to those difficulties, the labor market may adjust, perhaps by creating more jobs that immigrants and/or natives could fill, or inducing natives to move. However, in the long-term, the impact of an immigrant cohort depends on the degree to which immigrants assimilate into U.S. society (i.e., become like native workers in terms of the skills they have). If they, or perhaps more importantly their children, assimilate economically, a given immigrant cohort will tend to make the economy larger without putting downward pressure on natives' wages. Also, keep in mind the possibility that immigrant employment often complements that of native workers.

Immigrants are an important and growing part of the U.S. labor force. Estimates indicate that one of every two new workers in the 1990s was foreign-born. As a result of these flows, from 1990 to 2002, the immigrant share of the workforce rose from 9.4 to 14 percent. Immigrants are also disproportionately low-wage workers, comprising 20 percent of the low-wage population, though they also make up much higher proportions in several high-skill occupations and sectors.

In 1997, the National Research Council concluded that immigration had a small effect on the wages of native workers. Evidence showed that immigration reduced the wages of competing natives by only 1 or 2 percent. Effects were also weak for native black workers, a group often assumed to be in competition with immigrant workers. Earlier immigrant cohorts were more significantly affected: they could expect 2 to 4 or more percent wage decline for every 10 percent increase in the number of immigrant workers. The report also noted that immigration, as a whole, resulted in a net benefit to the economy of between $1 and $10 billion annually, a small but still significant positive impact. Certain groups within the economy, such as those with capital or high-level skills or those consuming immigrants' goods or services, benefited from immigration, even if low-skilled natives stood to lose in the process.

While there is still general agreement that some native groups, particularly the high-skilled or those with capital, benefit from overall immigration flows, since 1997, the assertion that immigrants do not significantly affect natives' wages is now more broadly contested. Many studies continue to find no effect or only weak negative effects of immigration on low-skilled workers or workers in general. Others suggest that newly arriving immigrants do not have a statistically significant impact, but the degree to which immigrants substitute for natives increases with time spent in the United States. Still others contend that the negative wage effects are larger, perhaps on the order of a 3 or 4 percent wage decline for competing workers for every 10 percent increase in immigrants with similar skills. Other the other hand, some research found that immigration actually had a slightly positive and statistically significant effect on all natives' self-employment earnings.

Findings now are contested regarding immigrants' wage effects for highly-skilled native workers. Some researchers estimate that immigration during the last two decades depressed wages by 4.9 percent for native college graduates. In contrast, others have found that high-skilled immigrants actually raise native wages, for example that a 10 percent increase in high-skilled immigrants raised native skilled workers' earnings by 2.6 percent.

In essence, the literature indicates that the impact of immigration on native workers is an issue that is still up for debate, perhaps now more than ever. Some researchers have found divergent, large negative, small negative to non-existent, and

positive impacts from immigration on native relative wages, even among the most vulnerable populations. Furthermore, most research has found some job displacement or native exclusion within given sectors or cities as a result of immigration, but the criticism that many of these studies have looked where they would expect to find impacts is a valid one to keep in mind when viewing this literature convergence. Certainly, immigration's impact on the most vulnerable native workers is increasingly contested ground, which makes predicting future impacts doubly difficult.

In the end, whether or not immigrants actually depress wages or displace some workers may be only one consideration within a larger policymaking context. Whether the effects are slightly negative, somewhat positive, or tend toward zero, they may be far outweighed by other effects that immigrants have on the United States. Over and over again, we hear the claim that immigrants definitely take jobs away from native workers or that native wages are severely depressed by immigrant workers. But the empirical data supplies no smoking gun for those claims, and in fact, the opposite may be true.

Without an empirical foundation for attacking the entry of immigrants with low job skills, some critics of the current system simply argue that there is a better way of doing things. They are not satisfied that immigration fills needed job shortages and aids economic growth as a result of the entry of ambitious, hard-working family immigrants and their children, many of whom are professionals as well as unskilled workers with a propensity for saving and investment.

THE BENEFITS OF FAMILY IMMIGRATION

The economic data on today's kinship immigrants are favorable for the country. The entry of even low-skilled immigrants leads to faster economic growth by increasing the size of the market, thereby boosting productivity, investment, and technological practice. Technological advances are made by immigrants who are neither well-educated nor well-paid as well as by white collar immigrants. Moreover, many kinship-based immigrants open new businesses that employ natives as well as other immigrants; this is important since small businesses are now the most important source of new jobs in the country. The current system results in designers, business leaders, investors, and Silicon Valley-type engineers. And much of the flexibility available to American entrepreneurs in experimenting with risky labor-intensive business ventures is afforded by the presence of low-wage immigrant workers. In short, kinship immigrants contribute greatly to this country's vitality and growth. They are the "moms, pops, sons and daughters who open groceries and restaurants, who rebuild desolate neighborhoods and inspire America with their work ethic and commitment to one another." [13]

Beyond the obvious economic benefits of the current system, a thorough consideration of the benefits of the family-based immigration system must include the psychic values of such a system. The psychic value of family reunification is generally overlooked by empiricists perhaps due to difficulty in making exact calculations. Yet the inability to make such a calculation is no reason to facilely cast aside the concept or ignore the possibilities.

Perhaps as a first step in getting a sense of the unquantifiable psychic values of family reunification, we could begin by thinking of our own families and what each one of our loved ones means to us. How less productive would we be without one or more of them? How less productive would we be, having to constantly be concerned about their sustenance, safety, or general well being? How more productive are we when we know that we can come home at the end of the day and enjoy their company or share our days' events with them?

Ask Ming Liu, a design engineer for a U.S. telephone and electronics equipment company from China. Liu was doing fine, better than his boss expected, and always had his nose to the grindstone. But he became an even better worker after his wife and child rejoined him following a two-year immigration process. Liu's productivity skyrocketed. His boss observed Liu's personality opening up after his family arrived, and Liu came up with a completely new, innovative concept that helped the company change direction and increase sales. In Liu's words, after his family immigrated, he could "breathe again."

Or ask Osvaldo Fernandez, a former pitcher for the San Francisco Giants. He had defected from the Cuban national baseball team, leaving his wife and child back in Cuba. After a mediocre first half of the 1996 season, his wife and child were allowed to leave Cuba and join Fernandez in the United States. Overnight, his pitching performance radically improved. He attributed this turnaround to reunification with his wife and child.

---

[13] *Family Values, Betrayed,* NY TIMES, Editorial, May 4, 2007.

Consider the Ayalde sisters. Corazon became a U.S. citizen several years after she immigrated to the United States as a registered nurse to work in a public hospital devoted to caring for senior citizens. When her sister Cerissa, who had remained in the citizen, became widowed without children, they longed to be reunited—especially after Cerissa became ill. Corazon filed a sibling petition, and after years of waiting, Cerissa's visa was granted. Corazon felt her "heart being lifted to heaven" as the sisters reunited to live their lives together once again. I think of the Ayalde sisters often in the context of my own mother's inability to successfully petition for her sister's immigration out of mainland China to be reunited. First there was the paperwork for the application, complicated by the difficulty in obtaining documents from China. Then there were the backlogs in the sibling category, and finally the hurdles of getting travel documents out of China in the 1970s. When my mother received word that her sister had passed away, the tears she shed were only a fraction of the pain she had endured being separated from her sister for decades.

The truth is that the family promotes productivity after resettlement in the United States through the promotion of labor force activity and job mobility that is certainly as important—perhaps more important—than the particular skills with which individuals arrive. Family and household structures are primary factors in promoting high economic achievement, for example, in the formation of immigrant businesses that have revitalized many urban neighborhoods and economic sectors.

Those who would eliminate family categories contend that family separation is a fact of life (sometimes harsh) that we can get over or live with. Yes, most of us live without someone whom we love dearly either because of that person's death, or because the person lives across the country. Yes, we can get over this separation and perhaps become as productive as ever. Yet to take this ability to recover and place it in the context of immigration and say to someone who wants to reunify with a brother, sister, son, or daughter, "No, your relative cannot join you; you cannot reunify with this person on a permanent basis," is cruel. It visits the burden and challenge of recovery on the person unnecessarily. It prevents voluntary choice by adults who are capable of making life-affecting decisions relating to very private family matters. As such it can affect life-long circumstances that the individuals involved should have controlled.

CONCLUSION

I once had a friendly debate over lunch with a retired federal immigration judge about the sibling category. He could not understand the need for the category because, after all, he loves his sister just as much even though she lives in New York rather than next door in San Francisco. On further discussion, he acknowledged that he might feel differently if she was living in a different country where visa requirements made simple visits complicated. Family separation across national boundaries must be viewed differently from separation within the same country.

The opponents of the current system that favors many family categories contend that unending chain migration has resulted from this system. They present a picture of a single immigrant who enters, who then brings in a spouse, then each spouse brings in siblings who bring in their spouses and children, and each adult brings in parents who can petition for their siblings or other children, and the cycle goes on and on. Certainly for a period of time, family categories result in the arrival of certain relatives. However, the purveyors of the image of limitless relatives forget that throughout the course of immigration history to the United States, these so-called family chains are invariably broken. Thus, although virtually limitless numbers of western Europeans have been permitted to immigrate to the United States throughout the past two hundred years, at a given point, decisions are made—some slowly—by families about who is willing or wants to come to the new country and who does not. As a result, immigration numbers from western European countries have dramatically fallen off. For example, hundreds of thousands of immigrants from the United Kingdom, Germany, and Ireland immigrated to the United States in each decade of the first part of the twentieth century. The figures continued to be substantial for Germans and British nationals through 1970, but then the figures diminished significantly after that.

In reality, the proponents of the chain migration image are simply engaging in scare tactics that have serious racial overtones. Their proposal to cut off family categories comes at a time when three in four immigrants are Latino or Asian. Perhaps most reprehensible is the fallacy upon which these attacks are being made. In fact, the picture of ever-expanding immigration fueled by chain migration is a fabrication. Consider individual countries: the number of Koreans who entered in 1988 was 34,000, but by 1993, the figure was reduced by half, and in 2004 fewer than 20,000

Koreans immigrated. The number of Filipinos who immigrated in 1990 was over 71,000, but by 1993 the figure was about 63,000, and around 50,000 by 2004.

In further twisted reasoning, supporters of family category reductions argue that since the categories are backlogged many years (especially the sibling category), they should be eliminated because they are useless and do not achieve any family values. However, they categories certainly are not useless for those who have waited their turn and who are now immigrating. And if there is real sympathy for those on the waiting list, then providing extra visa numbers for awhile to clear the backlog is in order. In fact, that was the recommendation of the bi-partisan Select Commission more than a quarter century ago. Clearing the backlogs is not novel; in 1962, for example, extra visas were made available to clear backlogs for Italian and Greek immigrants. Reducing backlogs are more consistent with the broad goals of immigration policy and democratic values of best practices in governance. Immigration policy helps define the United States in the eyes of the world, and relative openness sends a positive message about American values and also creates important linkages and opportunities for exchange.

Easing the worldwide backlogs by providing favored treatment for Mexican immigrants is also worthy of consideration. Expanded legal access for Mexican immigrants has a great capacity to reduce unauthorized flows to the United States by addressing the greatest source of migration demand. Expanding the number of legal immigrant visas to Mexicans or taking Mexican migration out of the worldwide quota would increase the number of available worldwide visas to other countries, thereby reducing backlogs per se. At a time in world history when we need to continue thinking regionally, such a gesture of goodwill and understanding to our contiguous neighbor and ally is important, giving the need for greater economic and security cooperation between historically-linked societies.

As to the attack on the sibling category in particular, for many citizens and residents of the United States, including those of Asian or Latin descent, the argument that brothers and sisters are a family relationship of limited importance is puzzling. The backlog in the sibling category is evidence itself that brothers and sisters are important to many families. Many U.S. citizens have filed immigration petitions for siblings rather than for their own parents. Parents, the older generation, are often deeply entrenched in the country of birth, more comfortable in their native surroundings, and reluctant to emigrate and face adjustments to a new society as seniors. On the other hand, contemporary siblings are more adventurous and eager to emigrate. Being of the same generation as the citizen sibling, they, more than the parent, often have a closer relationship because they tend to share the same goals, interests, and values. Siblings are among the easiest immigrants to resettle, and generally become immediate contributors to the economy.

The importance of the sibling category has been long recognized in U.S. immigration laws. Section 2(d) of the first quota act of 1921 stipulated that "preference shall be given as far as possible to wives, parents, brothers, sisters, and children under eighteen years" of U.S. citizens. Preference for brothers and sisters was included after World War II because siblings were in many cases the only surviving members of families. Thus, this preference for siblings was continued in the basic nationality act of 1952. Brothers and sisters of U.S. citizens were placed in the same category of importance as sons and daughters of citizens. And, of course, in the 1965 amendments, Congress signed the sibling preference the highest percentage of visas—24 percent.

The Select Commission on Immigration and Refugee Policy defended the family reunification system in its 1981 report:

> The reunification of families serves the national interest not only through the humaneness of the policy itself, but also through the promotion of the public order and well-being of the nation. Psychologically and socially, the reunion of family members with their close relatives promotes the health and welfare of the United States.[14]

After all, the system resulted in the entry of "ambitious, hard-working immigrants and their children" who provided a disproportionate number of skilled workers with a propensity for saving and investment.[15]

In an era of promoting family values, proposals to eliminate family immigration categories seem odd. What values do such proposals impart? What's the message? That brothers and sisters are not important? Or (in the case of the proposal to limit children of lawful permanent residents) that once children reach a certain age, the parent-child bond needs not remain strong? Eliminating such categories institu-

[14] Final Report of Select Commission at 112.
[15] Final Report of Select Commission at 103.

tionalizes concepts that are antithetical to the nurturing of family ties, that ignore the strong family bonds in most families, and that should be promoted among all families. Indeed, the proposals send a strong anti-family message.

There is a reason that the preamble to the Universal Declaration of Human Rights highlights the unity of the family as the "foundation of freedom, justice and peace in the world." Our families make us whole. Our families define us and human beings. Our families are at the center of our most treasured values. Our families make the nation strong.

Ms. LOFGREN. Thank you.

Mr. Anderson?

TESTIMONY OF STUART ANDERSON, EXECUTIVE DIRECTOR, NATIONAL FOUNDATION FOR AMERICAN POLICY

Mr. ANDERSON. Thank you for the opportunity to testify.

The Bush administration has circulated a document that proposes ending the ability of U.S. citizens to sponsor their children for immigration if those sons or daughters have reached the age of 21.

One way to look at this is at the personal level. I think most Members of Congress would agree they would have a difficult time barring the door to their 22-year-old daughter while welcoming the immigration of their 19-year-old son.

Under the draft proposal Americans would also be prohibited from sponsoring a brother or sister for immigration, and it also would place restrictions on the admission of parents of U.S. citizens.

In essence, as part of a deal to appeal to critics who say we should not reward illegal immigrants, we would prohibit Americans from sponsoring their own children or other close family members for legal immigration.

This should be rejected as a policy option. Some argue that family wait times are too long. This is true. However, the fact that there are long wait times simply means that Congress hasn't raised the limits in a very long time.

The answer is not to eliminate categories and guarantee that Americans never have a chance to reunite with certain loved ones. The appropriate solution is to raise the quotas, as the Senate did last year in their bill.

It is alleged that eliminating family categories would reduce "chain migration." However, chain migration is a relatively meaningless term because it merely describes what has happened throughout the country's history. Some family members have come, they have succeeded, and then they sponsored other family members.

Let's suppose one immigrant arrives and takes 6 years to become a citizen. They sponsor a sibling, with an 11-year to 20-year wait. Then that sibling sponsors an adult child with a 6-year to 14-year wait.

The time between the arrival of the first immigrant and the third immigrant would be between 29 years and 46 years, depending on the country, not the continuous onslaught that critics allege.

And all the immigrants would immigrate under legal quotas that have been established already by Congress.

While approximately 58 percent of U.S. legal immigration in 2005 was family-based, more than half of family immigration was

the spouses and children of U.S. citizens, which almost no one has proposed eliminating.

Of total U.S. legal immigration in 2005, married and unmarried adult children of U.S. citizens accounted for only 2 percent each, and siblings of U.S. citizens accounted for only 6 percent.

In place of certain family categories, the Administration and others have discussed instituting a Canadian-style point system, which would only admit immigrants who receive enough points based on education and other criteria.

Some say a rationale for a point system is to improve the skill level of immigrants. In reality, according to the New Immigrant Survey and the Pew Hispanic Center, the typical legal immigrant already has a higher education level than the typical native. So the rationale for eliminating the family category simply isn't there.

Family members immigrating to support their U.S. relatives and caring for children and running family-owned businesses are more likely to benefit the United States economically than unattached individuals who achieve a certain number of points based on criteria designed by Government bureaucrats.

John Tu, president and CEO of California-based Kingston Technology, immigrated to America from Taiwan after being sponsored by his sister. When he sold his company, he gave $100 million to his employees, about $100,000 to $300,000 each, using the philosophy to treat employees and customers based on Asian family values of trust and loyalty.

Jerry Yang, co-founder of Yahoo, one of America's top companies, came to the country at the age of 10. He says Yahoo would not be an American company today if the United States had not welcomed him and his family 30 years ago.

U.S. employers want to recruit and hire specific skilled individuals, not skilled people in general. The most effective policy to promote skilled immigration is to exempt from the current quotas employer-sponsored immigrants with a master's degree or higher.

In addition, Congress can raise the quotas for H-1B temporary visas and green cards and eliminate per-country limits for employment-based immigration.

This is the package of reforms the Senate approved last year when it passed Senator John Cornyn's skill bill as part of the larger immigration bill, and Congress can simply return to those key reforms made in that bill rather than engage in wholesale reform of the immigration system.

Denying U.S. citizens the ability to sponsor adult children, parents or siblings is both unnecessary and politically divisive. The bill the Senate passed last year raised quotas for both family and employment-based immigration, and Congress can do so again this year.

Thank you.

[The prepared statement of Mr. Anderson follows:]

PREPARED STATEMENT OF STUART ANDERSON

Testimony of

Stuart Anderson
Executive Director
National Foundation for American Policy

On

"Family Immigration"

Before the
House Subcommittee on Immigration, Citizenship, Refugees, Border Security, and International Law

May 8, 2007

Thank you for the opportunity to testify. As newspapers have reported, the Bush Administration has circulated a document that proposes ending the ability of U.S. citizens to sponsor their children for immigration if those sons or daughters have reached the age of 21. One way to look at this issue is to put it at the personal level. If the policy would apply to their own families, most Members of Congress would agree they would have a difficult time barring the door to their 22-year-old daughter, while welcoming the immigration of their 19-year-old son.

In addition, under the draft proposal Americans would be told they are prohibited from sponsoring a brother or sister for immigration. Finally, the proposal, if enacted, would restrict even the admission of parents of U.S. citizens for immigration.[1]

In essence, as part of a deal to appeal to critics who argue we should not reward illegal immigrants, we would change immigration law to prohibit Americans from sponsoring their own children or other close family members for legal immigration. This should be rejected as a policy option.

There is no legitimate rationale for eliminating family immigration categories. Some argue that the wait times are too long. This is true. (The wait time for unmarried sons and daughters of U.S. citizens (over 21 years old) is 6 years from most countries and 14 years or more from Mexico and Philippines.) However, the fact that long waits exist in some categories simply means that Congress has not raised the limits to correspond with the demand. The answer is not to eliminate categories and guarantee Americans in the future could never reunite with certain loved ones. The appropriate solution is to raise the quotas, as the Senate did in its immigration bill passed in 2006.

Why eliminate the option of waiting for those who choose to wait? If one argues that long waits encourage individuals to jump ahead in line, then logically destroying all hope of immigrating legally would provide even more incentive for people to come here and stay illegally. Those who decry illegal immigration by saying people should immigrate legally cannot at the same time eliminate our country's most viable options for legal immigration.

The Myth of "Chain Migration"

It is alleged that eliminating family categories would reduce "chain migration." However, "chain migration" is a meaningless term that merely describes what has happened throughout the history of our country – some family members come to America and succeed, and then sponsor other family members.

The following example illustrates the myth of "chain migration." In 2007, an immigrant, who arrived 6 years before and has now become a U.S. citizen, decides to sponsor a sibling for immigration. With an 11-year wait (or 12 to 20 years for certain countries), that means 17 years would pass between the arrival of the first and second immigrant. If the second immigrant takes 6 years to become a citizen and then sponsors an unmarried adult child, it would take an additional 6 to 15 years for that immigrant to arrive. So under this "chain migration," the time between the arrival of the first immigrant and the third immigrant would be between 29 and 47 years, depending on the country of origin. This is not the continuous "onslaught" that critics seek to conjure up

when discussing this issue. Moreover, all of the immigrants in this example would immigrate under the legal quotas established by Congress.

While it is true approximately 58 percent of U.S. legal immigration in 2005 was family-based, more that half of family immigration was actually the spouses and minor children of U.S. citizens, which almost no one has proposed eliminating. Of total U.S. legal immigration in 2005, married and unmarried adult children of U.S. citizens accounted for only 2 percent each; siblings of U.S citizens accounted for only 6 percent.[2]

Already High Levels of Education for Legal Immigrants

In place of certain family categories, the Administration proposal and others have discussed instituting a Canadian-style point system, which would work by establishing a "score" and assigning admission "points" for age, education level and other characteristics for those immigrants who seek entry. Only those who achieve the score could immigrate.

The point system concept is little more than a Trojan horse designed to reduce family immigration. It is far from the best way to help employers hire the key people they need or to allow high skilled individuals to stay in America after graduating from a U.S. university.[3]

Some say a rationale for this element of the draft proposal is to improve the skill level of immigrants. In reality, the typical legal immigrant already has a *higher* skill level than the typical native, so upon examination the basic rationale falls apart for eliminating family categories and instituting a "point system."

- The New Immigrant Survey, which examines only legal immigrants finds: "The median years of schooling for the legal immigrants, 13 years, is a full one year higher than that of the U.S. native-born."[4]

- The Pew Hispanic Center reports: "By 2004, all groups of legal immigrants in the country for less than 10 years are more likely to have a college degree than natives . . ."[5]

- The Pew Hispanic Center also reports that the average family income for a naturalized U.S. citizen in the country more than 10 years in 2003 was more than $10,000 a year higher than a native ($56,500 vs. $45,900).[6]

- Writing in the May 1999 *American Economic Review*, economists Harriet Duleep, then a senior research associate at the Urban Institute, and Mark Regets, a senior analyst at the National Science Foundation, found that the gap in earnings between new immigrants and natives largely disappears after 10 years in the United States, with immigrant wage growth faster than native (6.7 percent vs. 4.4 percent).[7]

Simply put, while the policy of eliminating family categories would cause real pain for families, it would create little or no net benefit with regards to its stated purpose. Moreover, instituting the draft proposal's idea of requiring every American with a relative on the immigration waiting list to re-file their applications and pay a $500 fee (essentially a new tax) would display disdain toward such Americans.

Most past concerns with immigrant skill level focused on reports using Census data that included many illegal immigrants. Two of the studies cited above differentiate between legal and illegal immigrants and show "low education" level among legal immigrants is not a problem. Legal immigrants do congregate at the top and bottom of the education scale, but less so than Census data imply. Besides, economists agree that immigrants increase America's labor productivity most when they fill niches at the top and bottom. Moreover, the draft proposal's advocacy of a temporary worker program is recognition that America requires workers at different skill levels.

Economic Benefits of Family Immigration

Family immigration provides important economic benefits, particularly in fostering entrepreneurship, while also promoting the type of family cohesiveness that political office seekers tell voters is vital to the nation's future. "A large majority of immigrant-owned businesses in the United States are individual proprietorships relying heavily on family labor," testified University of South Carolina Professor Jimy M. Sanders before the Senate Immigration Subcommittee. "Our experiences in the field suggest that the family is often the main social organization supporting the establishment and operation of a small business." Sanders notes: "The family can provide important resources to members who pursue self-employment. Revision of Federal law in the mid-1960's to allow large increases in immigration from non-Western European societies and to give priority to family reunification increased family-based immigration and contributed to a virtual renaissance of small business culture in the United States. By contrast, labor migration that involves single sojourners who leave their families behind and work temporarily in the United States has produced far less self-employment."[8]

In New York City during the 1990s, the number of immigrant self-employed increased by 53 percent, while native-born self-employed declined by 7 percent, according to the Center for an Urban Future.[9]

Family members immigrating to support other family members in caring for children and running family-owned businesses are more likely to benefit the United States economically than unattached individuals who achieve a certain number of points based on criteria designed by government bureaucrats.

John Tu, President and CEO of Kingston Technology, based in Fountain Valley, California, immigrated to America from Taiwan after being sponsored by his sister. He built up his computer memory company with fellow Taiwanese immigrant David Sun. When Tu sold the company for $1 billion he did something almost unheard in the annals of business: He gave $100 million of the sale's proceeds to his American employees – about $100,000 to $300,000 for each worker. This decision changed the lives of those

working at Kingston, allowing many to fund dreams for themselves and their children. Kingston employee Gary McDonald said, "Kingston's success came from a philosophy of treating employees, suppliers, and customers like family, this being based upon the Asian family values of trust, loyalty, and mutual support, practiced by John and David."[10]

Jerry Yang, co-founder of Yahoo!, one of America's top companies, came to this country at the age of 10. "Yahoo! Would not be an American company today if the United States had not welcomed my family and me almost 30 years ago," said Yang.

Maintaining an open legal immigration system is a key conclusion of a study I co-authored for the National Venture Capital Association. That study found entrepreneurs that received venture capital arrived in America through many different parts of our immigration system. The study found that since 1990 one in four (25 percent) of America's publicly traded venture-backed companies had at least one immigrant founder.[11] The market capitalization of these immigrant-founded companies exceeds $500 billion, adding significant value to the U.S. economy.

In addition to economic benefits, it is important to remember that family immigration has always been the foundation of America's immigration system. It is part of the country's tradition going back from the Mayflower through Ellis Island and to the present day. The historical records at Ellis Island make clear that most immigration prior to the 1920s was family-based, and such unification never entirely lost its role. A report of the House Judiciary Committee on the 1959 legislation states, "The recognized principle of avoiding separation of families could be furthered if certain categories of such relatives were reclassified in the various preference portions of the immigration quotas." Joyce Vialet of the Congressional Research Service analyzed the 1965 Immigration Act and concluded, "In response to the demand for admission of family members, Congress enacted a series of amendments to the Immigration and Nationality Act (INA), beginning in 1957, which gave increasing priority to family relationship. The family preference categories included in the 1965 Act evolved directly from this series of

amendments. Arguably, the 1965 Act represented an acceptance of the status quo rather than a shift to a new policy of favoring family members."[12]

Is The Goal Of A Point System To Reduce Hispanic Immigration?

Without more information it is difficult to forecast the precise impact of a point system on a particular cohort of immigrants. However, Harvard economist George Borjas, an advocate of a point system, concedes that keeping out Mexicans is a likely end product of a point system. "Most likely," he writes, that under a point system, "the predominance of Mexican immigrants and of immigrants from some other developing countries will decline substantially."[13] One would hope the goal of today's proponents of a point system is not to prevent immigration from Mexico and Central America. But whether or not this controversial idea is the intended goal, it is the most likely outcome of the proposal. Lending credence to the idea the draft proposal means to reduce immigration from Mexico and Central America is a controversial provision in the proposal that would prohibit current illegal immigrants who obtain legal status from ever being permitted to sponsor family members.

A Point System: The Federal Bureaucrat Empowerment Act

While the President and many Members of Congress were elected on a platform of empowering families and entrepreneurs, the draft immigration proposal empowers unelected bureaucrats. In short, a point system would transfer power from Congress to federal bureaucrats at the expense of individuals, families, and employers. "A point system has many imperfections," concedes point system advocate George Borjas. "A few hapless government bureaucrats have to sit down and decide which characteristics will enter the admissions formula, which occupations are the ones that are most beneficial, which age groups are to be favored, how many points to grant each desired characteristic and so on."[14]

After noting that the list of occupations, each assigned points, takes up 10 pages in the Canadian system, Borjas writes, "Most of these decisions are bound to be arbitrary

and clearly stretch the ability of bureaucrats to determine labor market needs well beyond their limit."[15] But bureaucrats are not well suited to handle labor market decisions. Moreover, no government test can ever measure life's most important intangibles: drive, individual initiative, and a commitment to family.

Those who advocate limiting the entry of "less skilled" immigrants are generally among the most vociferous opponents of skilled immigrants. In 1998 and 2000, anti-immigration groups and some Congressional allies fought the expansion of H-1B temporary visas for high-skilled, foreign-born engineers and computer scientists. But these same groups also oppose family immigration. One advocate of a point system derisively refers to scientists and engineers entering on H-1B temporary visas as "high tech braceros," equating them with the migrant farm workers of the 1950s.[16]

Finally, one should note that the Canadian point system is designed with a different purpose in mind. Given its relatively small population, Canada needs to attract immigrants to the country. In the United States, attracting skilled immigration is not a problem. The American problem is straightforward – Congress has failed to increase the quotas for H-1B temporary visas and employment-based green cards. This has resulted in year-long delays in hiring highly skilled individuals on H-1B temporary visas and five-year or longer delays for employer-sponsored immigrants to complete the green card process.

The Correct Policy To Expand Skilled Immigration Is To Increase Employment-Based Immigration

U.S. employers want to hire specific skilled individuals, not skilled people in general. This is the most serious flaw behind a point-based system. When companies recruit, often off U.S. campuses, they find skilled foreign nationals along with many talented Americans. One-half to two-thirds of graduate students in electrical engineering, computer science and other key fields at major U.S. universities are foreign nationals.[17]

Companies thrive on certainty. Replacing the current uncertainty in the immigration system with another form of uncertainty (Will company-identified individuals be able to pass a bureaucratic "point" test?) is not a recipe for building a highly competitive U.S. workforce. While the current backlogs and delays in green card create uncertainty, at least employers are able to sponsor specific individuals.

Moreover, in the future, there will be uncertainty about what level of immigration any point system will sustain. In the end, we will not end up with a solution but only a different set of problems.

The most effective policy to promote skilled immigration is simply to exempt from the current quotas employer-sponsored immigrants with a master's degree or higher. In addition, Congress can raise the quotas for both H-1B temporary visas and green cards, eliminate the per country limits for employment-based immigration and allow international students an easier path to remain in the country after completing their studies.

These are not revolutionary ideas. In fact, this is precisely the package of reforms the Senate approved last year when it passed Senator John Cornyn's SKIL bill (S. 2691) as part of the larger immigration bill. Congress can simply return to the key reforms made in that bill, rather than engage in wholesale reforms that will undermine the current immigration system.

Denying U.S. citizens the ability to sponsor adult children, parents or siblings is both unnecessary and politically divisive. The bill the Senate passed last year raised quotas for both family and employment-based immigrants and Congress can do so again this year.

Conclusion

The President's 2000 Election campaign site, which delineated his policy positions on several key issues, stated:

> Governor Bush believes that immigration is not a problem to be solved, but the sign of a successful nation. As Governor of a border state, he knows first-hand the benefits legal immigrants bring to America. While he is strongly opposed to illegal immigration, he believes more should be done to welcome legal immigrants. Therefore, he will establish a 6-month standard for processing immigration applications, *encourage family reunification*, and split the INS into two agencies: one focused on enforcement, and one focused on naturalization and immigration services.[18]

Eliminating family categories to make it perhaps impossible for individuals to become reunified with close family members cannot be described as "encouraging family reunification."

In the end, the President and the Congress need to decide whether immigration policy will be made only with the assent of those most opposed to immigration. If not, then it appears likely a consensus can be formed by a majority of legislators in both the House and Senate to make needed reforms that will reduce illegal immigration, preserve family immigration, establish new legal avenues for lesser skilled workers and expand opportunities for high-skilled, employment-based immigrants.

APPENDIX

Table 1: Wait Times for Family-Sponsored Immigrants

	China	India	Mexico	Philippines	All Other Countries
Unmarried Adult Children of U.S. Citizens (1st Preference) 23,400 a year	6 year wait (Processing applications before May 2001)	6 year wait (Processing applications before May 2001)	15 year wait (Processing applications received before Jan. 1991)	14 year wait (Processing applications received before March 1992)	6 year wait (Processing applications before May 2001)
Spouses and Minor Children of Permanent Residents (2nd Preference – A) 87,934 a year*	5 year wait (Processing applications before April 2002)	5 year wait (Processing applications before April 2002)	6 year wait (Processing applications received before Jan. 2001)	5 year wait (Processing applications before April 2002)	5 year wait (Processing applications before April 2002)
Unmarried Adult Children of Permanent Residents (2nd Preference - B) 26,266 a year	9 year wait (Processing applications before October 1997)	9 year wait (Processing applications before October 1997)	14 year wait (Processing applications before March 1992)	10 year wait (Processing applications before October 1996)	9 year wait (Processing applications before October 1997)
Married Adult Children of U.S. Citizens (3rd Preference) 23,400 a year	7 year wait (Processing applications before April 1999)	7 year wait (Processing applications before April 1999)	17 year wait (Processing applications before Feb. 1988)	20 year wait (Processing applications before Jan. 1985)	7 year wait (Processing applications before April 1999)
Siblings of U.S. Citizens (4th Preference) 65,000 a year	11 year wait (Processing applications before November 1995)	11 year wait (Processing applications before January 1996)	12 year wait (Processing applications before July 1994)	20 year wait (Processing applications before January 1985)	11 year wait (Processing applications before May 1996)

*Source: U.S. Department of State Visa Bulletin, May 2007; National Foundation for American Policy. *The spouses and minor and adult children of Permanent Residents category is 114,200 annually "plus the number (if any) by which the worldwide family preference level exceeds 226,000." 75% of spouses and minor children of lawful permanent residents are exempt from the per-country limit. Wait times are approximate.*

Table 2: Wait Times for Employment-Based Immigrants

	China	India	Mexico	Philippines	All Other Countries
Priority Workers (1st Preference)	Numbers Immediately Available to Qualified Applicants	Numbers Immediately Available to Qualified Applicants	Numbers Immediately Available to Qualified Applicants	Numbers Immediately Available to Qualified Applicants	Numbers Immediately Available to Qualified Applicants
Advanced Degree Holders and Persons of Exceptional Ability (2nd Preference)	2 year wait (Processing applications before April 2005)	4 year wait (Processing applications received before January 2003)	Numbers Immediately Available to Qualified Applicants	Numbers Immediately Available to Qualified Applicants	Numbers Immediately Available to Qualified Applicants
Skilled Workers and Professionals (3rd Preference)	5 year wait (Processing applications before August 2002)	6 year wait (Processing applications before May 2001)	6 year wait (Processing applications before May 2001)	4 year wait (Processing applications before August 2003)	4 year wait (Processing applications before August 2003)
Other Workers	Unavailable	Unavailable	Unavailable	Unavailable	Unavailable

Source: U.S. Department of State Visa Bulletin, May 2007; National Foundation for American Policy. Once a number/visa is available processing can take from 2 months at an overseas post to longer periods with U.S. Citizenship and Immigration Services. Wait times are approximate.

Stuart Anderson

Stuart Anderson is Executive Director of the National Foundation for American Policy, a non-profit, non-partisan public policy research organization in Arlington, Va. focusing on trade, immigration, and related issues. Stuart served as Executive Associate Commissioner for Policy and Planning and Counselor to the Commissioner at the Immigration and Naturalization Service from August 2001 to January 2003. He spent four and a half years on Capitol Hill on the Senate Immigration Subcommittee, first for Senator Spencer Abraham and then as Staff Director of the subcommittee for Senator Sam Brownback. Prior to that, Stuart was Director of Trade and Immigration Studies at the Cato Institute in Washington, D.C., where he produced reports on the military contributions of immigrants and the role of immigrants in high technology. He has an M.A. from Georgetown University and a B.A. in Political Science from Drew University. Stuart has published articles in the *Wall Street Journal*, *New York Times*, *Los Angeles Times*, and other publications.

ENDNOTES

[1] There currently is no numerical quota on the immigration of the parents of U.S. citizens. The draft proposal contemplates placing a quota that would restrict the immigration of such individuals to the United States.
[2] *2005 Yearbook of Immigration Statistics*, Office of Immigration Statistics, Department of Homeland Security, Table 6.
[3] Today, highly skilled researchers and scientists endure waits of 5 years or more for green cards, preventing such individuals from advancing their careers. It also signals to international students and other innovators that America may not be the place to build their future.
[4] New Immigrant Survey (1998); Stuart Anderson, "Muddles Masses," *Reason*, February 2000.
[5] Jeffrey S. Passel, *Unauthorized Migrants: Numbers and Characteristics*, Pew Hispanic Center, June 14, 2005, p. 24. Passel points out that this is the case "notwithstanding the continued over-representation of legal immigrants at low levels of education."
[6] Ibid., p. 31.
[7] Anderson, "Muddles Masses."
[8] Testimony of Jimy M. Sanders before the Senate Judiciary Committee, Subcommittee on Immigration, "Immigrant Entrepreneurs, Job Creation, and the American Dream," April 15, 1997.
[9] Jonathan Bowles, *A World of Opportunity*, Center for an Urban Future, February 2007, p. 7.
[10] Testimony of Gary D. MacDonald, Kingston Technology, at hearing on "Immigrant Entrepreneurs, Job Creation, and the American Dream, Senate Immigration Subcommittee, April 15, 1997.
[11] Stuart Anderson and Michaela Platzer, *American Made*, National Venture Capital Association, November 2006.
[12] Anderson, "Muddles Masses."
[13] Ibid.; George J. Borjas, *Heaven's Door*, Princeton University Press, 1999.
[14] Ibid.
[15] Ibid.
[16] Ibid.
[17] National Science Foundation.
[18] George W. Bush for President 2000 Web Site. Emphasis added.
http://www.4president.org/issues/bush2000/bush2000issues.htm.

Ms. LOFGREN. Thank you.

Thanks to all of you for your testimony.

We will begin our questioning now, and I will start off on that point.

I would like to ask you, Mr. Anderson, if you could comment. Congressman Gingrey has described a situation where aunts and cousins immigrate, ending up with 273 people per employment immigrant. Can you comment on that?

Mr. ANDERSON. Yes. I think the example that I gave is more typical of what would happen even under sort of a tight situation, in which it would take 29 years to perhaps 50 years, depending on the country, for even getting from the first to the third immigrant.

So again, I am sure Dr. Gingrey, put the numbers out there in good faith. I am just not sure how you would get numbers of that magnitude.

And also, any numbers you would have would have to come in under the quotas that Congress has already legislated.

So I think that the whole idea of chain immigration, not specifically the example the Congressman gave, is meant to conjure up these hordes of people, you know, coming into the country one after another, when what you are really talking about is many, many years from going from one to the second to even the third family member.

If, as Mr. Hing talked about, even if there is a decision made to——

Ms. LOFGREN. So that couldn't—well, I mean, it could happen over time, but Congress currently is controlling that through controlling the numbers per category per year.

Mr. ANDERSON. Right. There are some particular categories. And again, I just think the term, you know, gets to be a little misleading.

Ms. LOFGREN. Mr. Hing, you have testified about the history of this whole situation. The Department of Labor has actually told us, and we have received testimony today, that immigrants have a much higher rate of entrepreneurship than native-born Americans, and that a large majority, they say, of immigrant-owned businesses in the U.S. are individual proprietorships and family proprietorships.

I am wondering whether, if we were to accept the immigration proposal to dramatically reduce the impact or permission of family-based immigration, would this have an impact on the small-business development in the United States, in your professional judgment?

Mr. HING. Absolutely, Madam Chair. The people that would be prevented from coming in are those that are starting small businesses. And as all of you know, most of the employment creation in the United States is done at the hands of small-business owners.

And so, those that we would be preventing from coming in are the moms and pops, and sons and daughters, and brothers and sisters who actually represent the spirit of entrepreneurship, who go into dilapidated neighborhoods and demonstrate the work ethic that all of us are very proud of.

Ms. LOFGREN. Congressman Gingrey, we do appreciate your willingness to spend time with us. I know all of us have very busy

schedules, and it is a great gift to us that you would take time out of your schedule to be here.

In looking at your testimony, I see that it would basically eliminate the ability of United States citizens to petition for their adult children and siblings.

And I guess all of us bring to our legislative task our own personal history. I have a 22-year-old son in addition to a 25-year-old daughter. I am wondering how eliminating my ability as a U.S. citizen to bring my 22-year-old son here is consistent with our sense of family values in America.

Mr. GINGREY. Madam Chair, in regard to limiting your ability to do that, certainly your adult, 21-, 22-, 35-year-old brother or sister, who may be from your native country and still there—an opportunity to be in the queue to come into this country as a legal permanent resident—and they have that opportunity. And they still have that opportunity.

I want to respond to the gentleman, Mr. Anderson. He talked about these hordes of people that Congressman Gingrey referred to, and I want to, for the record, just—and I will be glad to give Mr. Anderson a copy of this.

This is the hordes of people, Mr. Anderson, under the chain migration policy that now exists and how the 273 in the extreme, over a 15-year period, get here. Many of them may have great skills, but a lot of them have very little skills.

Ms. LOFGREN. Well, if you will give that to Mr. Anderson, I am sure he would appreciate looking at it. Somebody may ask him about that.

And I see my time has expired. I would just say that, in my judgment, turning 21 is not a valid criteria for separating parents from their children. But that is just my opinion.

The Ranking Member is now recognized for his 5 minutes.

Mr. KING. Thank you, Madam Chair.

First, I would reflect with Congressman Gingrey, 5,200 babies, that would be a baby a week for a century, so you must have been busy some of those weeks. And that is quite an impact on society, and I compliment you for that.

I would ask you if you could make some more expansive comments on the 273. It is my understanding that that actually could be significantly larger, but the spreadsheet just didn't accommodate going beyond this to other generations.

And also, the cultural question of—I mean, I look across at my family, at many of the families that I know, my relation—we are scattered all over the country and other places in the world. And we stay in contact through e-mail and a lot of other ways, and we travel and have family reunions to get together. That is the American family. The American family is dispersed.

And so, isn't it reasonable to expect that people that arrive here as immigrants, who would assimilate into this culture, might adopt those same kind of dispersed family values, that we cherish our families, but we also take on our responsibilities and make career decisions accordingly?

Mr. GINGREY. Well, of course, many of the people that come into this country are Asian immigrants, are immigrants from south of

the border, are Latino immigrants, have great family values, there is no question about that. They also tend to have large families.

And again, my feeling, my bill that I have introduced, H.R. 938, the Nuclear Family Priority Act, honors that philosophy. And I don't disagree with my co-panelists on that.

But again, I mean, if you look at these numbers in the extreme, and the fact that we already have 12 million illegal here, and if each one of them could, by this family reunification policy since 1965, in the extreme, bring in an additional 273—and it does, in fact—Mr. Anderson mentioned that it counts against the quota system.

Absolutely, so that people waiting in line to come here, skill-based applicants, are pushed further and further behind in the queue and may never get to this country to bring their skills here.

Mr. KING. Thank you, Dr. Gingrey.

I would then turn to Mr. Hing, and you made a statement that there are racial implications behind getting rid of some of the family reunification.

And if we would look across the history of immigration in this country, there have always been, of course, racial implications, because people come—and I think we really mean not so much racial implications as we do national origin implications or perhaps ethnic implications.

But as people come from different places, obviously, they bring with them a certain label that their geographic source has established with and for them and on them.

But would it be possible to discuss the kind of policies that are being advocated here—the reduction in the amount of family reunification, for example—could one do that without having racial implications? And how do I do that?

Mr. HING. Well, the way you do it is by indicating that you are not going to eliminate categories that have the substantial effect on particular racial groups.

Mr. KING. But won't that allegation always be made? If we change categories, adjust categories or eliminate them, aren't there always implications that the allegation can be made by persons such as yourself continually throughout this debate? Or could you help us find a way not to?

Mr. HING. Sure. I will be happy to. The way you do it is by having a first-come, first-served system. And if you are willing to go that way, then I think the——

Mr. KING. Okay, but I am interested in putting it on merit so that we can have young, skilled, trained people that are going to contribute to this economy for a long time. Now, can we do that without racial implications?

Mr. HING. Sure, we can. We can look at it in two different systems, the way we have now—with all due respect to Dr. Gingrey, when he stated that labor immigrants are put at the back of the line because family—it is two different systems. The 140,000 visas for the labor and economics are a completely different system. They are handled autonomously.

So yes, you can handle the labor issue and the employment issue separately, as it already is structured, and handle the family system separately, as it is handled today.

Mr. KING. Can I ask you to just present a document to this Committee that would outline those thoughts on that? I think that is going to be really instructive for us, because there is friction there.

And if there is good, clear policy we can do with avoiding that friction, I think that would be very constructive.

Mr. HING. Yes. There is no reason to put those two issues in opposition.

Mr. KING. Okay. Thank you. I am watching the yellow light here.

Another question I wanted to ask you is that pretty much the statement has been made here by yourself and a number of others about all who come here—I will say this: All who work in this economy contribute to the GDP. Would you concede that statement?

Mr. HING. Sure.

Mr. KING. And then the follow-up to that is—because every time someone pays a dollar it gets added. And I agree with that. But is there such a thing as nonessential work in this economy?

Does it get to the point where some people work so cheaply that people who would otherwise not have someone weed their garden or mow their lawn or trim their trees or wash their windows, things that they would do themselves, how large a sector might that be? How large is the nonessential sector of this economy?

Mr. HING. I think that everyone who is paid a minimum wage contributes to the GDP. There is no debating that.

Mr. KING. Would you concede there is a nonessential sector?

Mr. HING. It depends on how you define it.

Mr. KING. Thank you, Mr. Hing.

Madam Chair, I would yield back.

Ms. LOFGREN. The gentleman's time has expired.

I turn now to our colleague, Mr. Luis Gutierrez, for his 5 minutes.

Mr. GUTIERREZ. Thank you very much, Madam Chairwoman.

I guess we are going to have to have at least somewhat of a discussion of the concept of family and how people view family.

And I would just like to ask Congressman Gingrey, I have a relative expectation that I live in Chicago, and that my parents are in Chicago, and that my children are going to be around, and so I decide to live there. This is a decision that I make. And I think I am pretty reflective of a lot of immigrant communities that tend to live together and tend to think of even their jobs and where they are going to go.

Do you see anything fundamentally wrong with that?

Mr. GINGREY. I don't think there is anything fundamentally wrong with it. I would say that taken to the extreme that it hurts our assimilation into our society, and I think it has the potential for hurting that community and that family.

Mr. GUTIERREZ. I don't understand how it would hurt our assimilation. My parents only spoke Spanish. I only spoke English. The fact that I was their child actually helped them assimilate.

I am actually different than they are, and my children are different than I am. We share some commonalities, but we are actually different, in that I had to send my daughter to a special school so she would learn Spanish, given that neither my wife nor I speak Spanish in our household, yet both of her parents spoke Spanish and both of mine did.

But we have continued to live together. Actually, we have a very rich bilingual tradition.

And I checked with my daughter, and she told me it was rather expensive at the university to take Spanish classes and that all her friends who come from non-Hispanic families are taking Spanish classes because they say it is the great thing for the globalization of our economy and our hemispheric traditions in terms of our economy here.

Because Mr. King said that it was bad, that it would stifle our economy. I really haven't seen it stifle our economy.

In Chicago, the second-largest tax stream of city tax dollars after Michigan Avenue, the Magnificent Mile, is 26th Street in the immigrant community, only followed by the Koreans on Lawrence Avenue.

So if anything, there are large streams of monies coming to the city of Chicago from those immigrant communities. And part of the basis is they live there because their family is there. They have a great tradition of families.

And so I don't quite grasp this thing, this notion, almost as though it is good that people scatter across America. A lot of times, people don't want to scatter across America. A lot of times, people think it is important that they live together.

I mean, we don't live in the same neighborhood, but we live in the same city, and the proximity of one to another really gives us a great deal of stability, gives us a lot of stability, because we have obviously a community that we all live in.

And I would just like to follow up on Chairwoman Lofgren's point about her children, and I think that in America, Mr. Gingrey, as we look at America, more and more, we find that our children are coming back to live—not me, but children are coming—it is just happening across America.

And it is not just anecdotal evidence that my friends still have 27-year-olds and 28-year-olds and 29-year-olds coming back to live with them. The fact is the concept of family even in America is changing.

When I left home at 19, I left home. It was a different time. My 19-year-old isn't me when I was 19 years old, nor do I want her to be. It is a different time.

I expect that my kids are going to be around a lot longer than I was with my parents, and that, indeed, I was with them longer than they were with theirs. It is progress, in many senses, that they stick around longer.

So even if we look at America—that is, those of us like you and I that were born here in this country and are native-born citizens, we find that our children stay with us well beyond 21 years of age.

And there isn't some kind of—how would I say it?—automatic, or—I am trying to think of the word, Congressman Gingrey, but some kind of automatic cutoff when they are 21 years of age. They continue to be our children.

I have looked at your chart, and I have to tell you that in my practice as being a Member of Congress and having a huge immigrant community, it take 100 years before you got to the end of that chart. I am serious.

It just would take—people come here. They become permanent residents. It takes 5 years as a permanent resident before they can become a citizen.

The backlogs are between a year to 2 years, so your expectation, even if you did it, would probably be about 7 years. And then you have to stay there. And then it takes 5 years to become a citizen of the United States.

I mean, it takes a while. Do you know what the waiting period is on your chart for an American citizen sibling in the Philippines, for my brother, a brother or a sister? It is 24 years. For Mexico, for a brother or sister, it is about 14 years, 15 years.

So even if you carried this thing out, given the caps that we currently have—and I practiced this a lot in the office, because I was sharing with Mr. Berman, people came up to me when I first got elected to Congress and they said, "Well, I would like to apply for my brother." And I said, "Well, do it now. In 13 years, their visa will be available for them."

I see them now, and they regret the fact they didn't apply for their brother. I mean, it is so long—I am sorry, my time—it is so long, Mr. Gingrey, I assure you that people don't apply for their siblings under this chart because they have no realistic expectation that it is going to happen in the scheme of things in a prudent amount of time.

Ms. LOFGREN. The gentleman's time is expired.

Mr. GUTIERREZ. Thank you.

Ms. LOFGREN. The gentleman from Texas, Mr. Gohmert?

Mr. GOHMERT. Thank you, Madam Chairman.

And I appreciate the witnesses here today.

One comment that was made earlier about, you know, the United States separating the family—and just in fairness, it would seem that whoever it is that decides to leave a family in another country and come to this country would be the one that make the decision to consciously separate the family.

I know in this day and time it is good to apparently politically beat up on the United States, but I would think that, to be fair, whoever decides to leave the family and the home makes that first decision.

Now, one of the things the Chairwoman had started was a hearing on the immigration service, and I think it is doing an atrocious job of getting applications through their service.

And that is something I hope we continue to have hearings on, because that is so grossly unfair. Any Member of Congress that assists people with visas and opportunities to come into this country knows we are talking years.

And my friend, Mr. Gutierrez, makes a good point. I mean, we are talking years from so many places.

But, Dr. Gingrey, you—and I apologize for being late. You had mentioned, or someone had referred to your mentioning 273 as a chain migration, and knowing you, I know you don't just toss out information lightly.

Could you give a basis for getting to that number?

Mr. GINGREY. Mr. Gohmert, yes, I would be happy to, Representative Gohmert. These numbers come from Dr. Robert Rector and NumbersUSA.

Dr. Rector is a fellow at The Heritage Foundation and has published a white paper, and I think soon in book form, on the fiscal cost of low-skilled households to the United States taxpayer. That is where these numbers come from.

I don't have any reason to believe that the hordes of people that Mr. Anderson say do not exist indeed do exist.

And I will be glad to share this with all the Members of the Committee and with my colleagues——

Mr. GOHMERT. Is that part of the record?

Mr. GINGREY. That is part of the record. It is.

Mr. GOHMERT. Okay. Thank you.

Mr. GINGREY. And I also want to say, in regard to Dr. Duleep—I am sorry, I probably mispronounced—Dr. Duleep, I am sorry—in regard to that—but talking about the fact that the immigrant families are the ones that are the small-business men and women that create the businesses, and that, in fact, family reunification policy of bringing people in this country is probably better economically for this country than to bring in skilled workers, who are waiting in the queue and sometimes never get here because of all the others that come before them in the queue by virtue of family reunification based not at all on their skill level—the statistics that Dr. Rector has presented shows that so many of these—probably not the family of Representative Gutierrez, but so many of these that come under family reunification are either already high school dropouts or will become high school dropouts.

And even if they are working in this country and at a decent wage, and paying all of their taxes, which many are, they are probably on average, particularly the high school dropout category, paying about $10,000, $11,000 worth of State, local and Federal taxes and receiving about $30,000 worth of benefits.

So when we start talking about GDP and contribution to this economy, those are the numbers that you have to——

Mr. GOHMERT. Well, my time is about out, and I appreciate that.

I would just like to point out—and I know it is not good to generalize with respect to national origin or races, but my experience with Hispanics in Texas, in east Texas, has been that they give me new hope.

I have seen over the last 40 years a tremendous breakdown in the family, in people's belief in the God that was cited by our founders, and I find extremely hard-working ethic, intense loyalty to families and intense loyalty to God, and I think those are three things that have made America great. So I am hopeful that that will be the strengthening of America by that kind of influx.

But I am very concerned that we are encouraging a small element to come in, have children in our hospital, and then start a chain migration of those who are not the most hard-working people. And any facts that anyone has to support what we can do to help our neighbors to the south to promote a good, strong middle class I think would be the thing to do.

But I appreciate you all's testimony.

Ms. LOFGREN. The gentleman's time has expired.

Mr. Berman, the gentleman from California?

Mr. BERMAN. Dr. Gingrey, an illegal immigrant arrives here on May 8, 2007. Can you tell me the year that the 273rd member of his family gets here?

Mr. GINGREY. Representative Berman, if these statistics are accurate, and I feel that they are, then that year would be 2023.

Mr. BERMAN. That is nonsense. I mean, it is impossible. There is nothing I have read in what you have passed out that would lead me to that conclusion. But let's leave it at that.

I do want to repeat one point, because you said it several times now, notwithstanding Professor Hing's point. The people coming here under labor petitions do not—we authorize a certain number of those visas every year. They are not dependent on what the backlog is or what the petitions are for family-based immigration. They are in a separate line. The country quotas may have impacts, but the line is a separate line from the family-based immigration.

But I would like to ask—I appreciate very much the testimony. Several of you have had a chance—I don't know about chain migration, but certainly there has been a chain of immigration reform proposals, and at least two of you on the panel I have worked with for a very long time on these issues.

But I would like you to think a little bit outside the box. Accepting what you say about the benefits, the values, the economic studies regarding legal immigrants—I think we have had some mixup here between profiles of people who came here illegally and legal immigrants in some earlier comments.

But what is going on right now is that we are being told there is a tradeoff here, for those of us who think the present situation with illegal immigration is really a national crisis, and we have to deal with it.

And part of dealing with it is finding a way to change the status that the only realistic and the only sensible policy is to deal with status adjustment for the 12 million or however many it—that we are going to have to deal with this whole issue of the existing legal immigration system, the "problem of chain migration."

Can you, off the top of your heads, or given the thought you have already given to this, create a system of points that deals with skills and education and family relationships in such a fashion that still maintains many of the strengths of the family-based system of immigration, but turns it into a context of a point system that might give us something to work with as we are faced with a choice of either thinking about revising legal immigration or walking away one more time with the problem of dealing with, in a sensible, comprehensive fashion, the issue of comprehensive immigration reform?

Do any of you have any thoughts of fundamental adjustments that could be made in the present legal structure of immigration and a conversion to a point system that could be less devastating to the strengths of the current system? And would you share them with us?

Ms. DULEEP. One idea would be to follow part of the path of Canada, which is they have essentially done away with these occupational skills categories where you are filling specific gaps, and to reward education per se.

I feel a little bit uncomfortable with what is more valuable to the U.S., a highly educated or a poorly educated person. Do we need another highly educated doctor or is it useful to the economy to have somebody who helps take care of my children so that I can work?

But given the concern about education levels, that would be an alternative path.

And actually, with Canada, if you compare the Canadian system with the U.S. system, before they made this change, they had a system that was heavily based on occupational skills, and we could find no effect on education levels between comparing the U.S. and Canada.

Ms. LOFGREN. The gentleman's time has expired, so if each Member could very quickly answer. We are making up for cell phone time here.

Mr. HING. Well, we actually sort of have a point system right now. That is one way of looking at it, is that we actually give extra points to certain relatives and extra points to people with certain job skills.

So if you are going to define it as a point system, then I would retain a very similar structure in terms of how much credit you get for certain kinds of relatives.

Mr. ANDERSON. Right. I would say, again, yes, you would have to give a lot of points for the family. Ironically, then you would actually have this competition between family and employment.

What I would say is that businesses, you know, U.S. high-tech companies and others, are not clamoring in any way, are not asking to have this type of point system. I mean, they want to be able to hire specific skilled people. I mean, so it is really not clear to me that it is economically beneficial, really, in any way to just have a lot of moderately or above-average-skilled people who are individually coming into the country seeking jobs.

Companies want to hire specific skilled people. So if anyone is in favor of helping on this, and they are concerned about skilled immigrants, they should be in favor of what Senator Cornyn and others have talked about in terms of, you know, increasing the employment-based quotas on their own.

Ms. LOFGREN. Congressman Gingrey?

Mr. GINGREY. Well, just to try to answer it quickly, I want to refer back to the comments Mr. Berman made in regard to counting against a quota system. In the family reunification, spouses and dependent children do not count.

But when we get into—and I agree, Mr. Berman, this is the extreme situation. And you say it would never happen. But in 1986, when we had 4 million amnesty program, we never thought that 25 years later we would have 12 million that came in illegally, and that is what can happen in the extreme as well.

Mr. BERMAN. But chain migration is a criticism of the legal immigration system. It is not about the issue of illegal immigrants. Comprehensive immigration reform is trying to fix that.

I have more than exceeded my time.

Ms. LOFGREN. The gentleman's time has expired.

Mr. Gallegly?

Mr. GALLEGLY. I am sorry. I just walked in, and I will defer to the next in line.

Ms. LOFGREN. The gentleman from California, Mr. Lungren, is recognized for 5 minutes.

Mr. LUNGREN. Thank you very much.

I don't think this is an easy issue or an easy question or series of questions to answer, frankly. And I started working on this issue back in 1979, shortly after we went to the new vision of our overall immigration policy.

But let me just ask this. I happen to be one who has supported family unification as a major element of immigration policy. But I don't think, really, that is the question. The question here is, how far do you extend family preference?

And I am sorry I was not here to hear all of your testimony, but I would just like to ask each of you this. What is inconsistent with believing in family reunification in terms of nuclear family but making a decision that family preference immigration, as we see it, I would say other than spouses, ought not to be limited?

I mean, it seems to me when I hear from people, they seem to sense that, yes, it makes sense to have immediate family, but as they see it, extended family in terms of family preference is going out too far.

And I would just like the four of you to respond to that, please, because that is what I hear from people, and that is the sense I have.

And when I look at what has been suggested of the negotiations with the Senate, what the Administration is talking about, they are talking about making changes in the area of family preference as opposed to immediate relatives.

Ms. DULEEP. Well, I would remind everybody of the point that Dr. Hing made, that, in a sense, when we look historically, there were not restrictions. And why are these restrictions being brought up now? That is one thing to keep in mind.

Mr. LUNGREN. Can I just respond to that? I mean, look, we have millions of people who want to come to the United States. So when we make one judgment here that is positive for somebody, that is necessarily a negative judgment for somebody else in terms of who all gets in.

So I suppose one of the questions is should the family preference beyond immediate relatives be the overriding principle behind our immigration policy when we have got to realize yes, those folks are getting in, but that presumably means other folks are further down the line.

Ms. DULEEP. Well, two things. One, siblings, for instance, do have an economic advantage. The effect of siblings on immigrant self-employment is larger than any other variable, including education.

Secondly, as we have been trying to state, there doesn't need to be a conflict between these two, but there can be unintended consequences. One of the interesting findings we found from our research is that people come in on the basis of occupational skills and people who come in as siblings have a positive effect on education.

And what is happening is that people come in on occupational skills and bring in their siblings. If you make the U.S. unattractive

in terms of that people cannot have their families here, you may have an inadvertent effect that was unanticipated.

Mr. LUNGREN. I didn't say can't have their families here. We are talking about extended families.

Ms. DULEEP. No, but you mean siblings, for instance.

Mr. HING. Yes. I think, Congressman, this is partially a debate over what the nuclear family is, and, you know, I and many other people include it to define children that are above the age of 21 and brothers and sisters.

I had a debate with an immigration judge that you may know in San Francisco that retired a few years ago, Monroe Kroll, over this very issue. And after our conversation, he realized, "You know what? I see what you are talking about, because I like my sister. She lives in New York. But if she lived across an international boundary, I would feel differently."

And so that is partly what the debate is. And I think that we ought to resolve it in favor of, not an expansion, but recognizing nuclear family to include siblings and adult sons and daughters.

Mr. LUNGREN. Well, in the work done by Dr. Duleep, you found that Canadian immigrants are younger and more language proficient than their U.S. counterparts. Then you go on to say these advantages do not translate into superior earnings power.

What about language proficiency? Is that irrelevant to overall impact of immigration?

Ms. DULEEP. It appeared to be irrelevant comparing Canada with the U.S. We also found that English language proficiency—over time the earnings profiles are very high. So somebody will have an initial disadvantage, but that disadvantage disappears over time.

Mr. ANDERSON. I would say that—what Mr. Hing has talked about. There is a little bit of a cultural issue here, where I think a lot of ethnic families do consider their brothers and sisters and certainly children over 21 a real integral part of their families, as well as their parents.

I also say the numbers really aren't that large. When you are looking at the married and unmarried adult children of U.S. citizens, you are only talking about 2 percent each of the whole U.S. legal immigration system. And for siblings, it is only 6 percent.

And again, it is not really mutually exclusive to increase employment-based immigration. In fact, I hope everyone who has been criticizing family immigration will come out strongly in favor of employment-based immigration, since that seems to be the implicit argument.

And again, companies are interested in hiring specific skilled people. I am actually a little concerned. I don't really understand why the Administration has decided to come out, or at least in theory may be coming out, favoring, really, a much more bureaucratic approach rather than something that is more family-based or employment centered.

Ms. LOFGREN. We don't want to cut off Congressman Gingrey for a quick response.

Mr. GINGREY. Madam Chair, thank you so much. I really appreciate that.

I just want to point out that my youngest child, my adult child, lives in New York. She could just as easily live in France or in

Mexico. I would see her just as often. She is just as much an integral part of my family. She doesn't have to live in this country necessarily to be there.

The doctor at the beginning said, why did we bring up these restrictions now? What is the big problem? Well, I will tell you. The fact is that we had 250,000 immigrants in 1976. We have 1,100,000 in 2006. That is the problem.

Ms. LOFGREN. The gentleman's time has expired.

And I would note that sometimes I feel the same way about my 22-year-old and how often I see him.

But I would recognize the gentlelady from Texas, Ms. Jackson Lee, for her 5 minutes.

Ms. JACKSON LEE. I thank the Chairwoman very much, and we are building blocks in terms of the hearings that we are having, and I am appreciative of this one as we pursue this question of family reunification.

And I do want to acknowledge the work of the Honorable Barbara Jordan, one of the predecessors of my particular district, the 18th Congressional District of Texas. And I got to know Congresswoman Jordan, and I know that this report that she did in a series of reports with the U.S. Commission on Immigration Reform was certainly one that she exhibited a great deal of commitment and a great deal of passion and a great deal of hard work. And I think it is important as we quote from her and utilize some of her works.

There is some points of this I agree with and some I do not. But I do think it is important that she started out by making it known that we are a Nation of immigrants committed to the rule of law and, as well, that the commission that she chaired believed that legal immigration has strengthened the country and that it continues to do so.

We here today are trying to find a way to construct an effective legal immigration system to work with those who have come to this Nation for a variety of reasons. Some of them include economic, but also come for reasons of fleeing persecution and also fleeing from the devastation of countries that they have come from.

As I read her report, the commission was sympathetic to that. They had a variety of proposals that included concerns about visa overstaying, concerns about how you do employer verification. But at the same time, I think it is important to note there was a sense of compassion.

This commission rejected the concept of amnesty, and I am very glad to say that no matter how our opponents try to construct the majority's position—and when I say the majority, the majority on both sides of the aisle that form the majority who want comprehensive immigration reform—it is not amnesty.

So we build upon that to say that if we are to put a legal construct in place, then are we to penalize the legal system against those who would engage in that system to be able to reunite with their families?

That is the real question before us. And I do want to put before us a New York Times editorial, May 4, 2007, that had a quote from the President when he was running for office, George W. Bush running for President, and he would always give an answer—or here

is a particular quote that was given: "Family values do not stop at the Rio Grande."

And I realize that as my good friend Congressman Gingrey, Dr. Gingrey, has indicated, all of us could get on airplanes and visit relatives, wherever they might be.

But the points have been made that family reunification is not easy. It has not been a pathway of celebration and blooms, and file one today and you are in tomorrow. It is a tedious, long effort.

I remember going to Chicago with Chairman Hyde at a point where we had literally collapsed in terms of the overworking of the immigration system. People who were attempting to achieve status legally were surrounding immigration offices, around and around and around and around. It got to a point where the Chairman of the full Judiciary Committee at that time did a hearing to confront the crisis that we were facing.

So I guess, Dr. Duleep, you mentioned the word "historical," that we did not have a history of denying family. Could you just very quickly recount that history for us, very quickly?

Ms. DULEEP. Well, we did have a history of denying families from particular regions, starting in the early 1920's. The national origins act was one where people who could come in was based on the percentage distribution of the population by various demographic groups, so——

Ms. JACKSON LEE. So when did we change?

Ms. DULEEP. Well, then we got rid of that in 1965. We got rid of that to go to more of a family admissions——

Ms. JACKSON LEE. And you believe the basis of moving or changing was that we found that that harsh process was not effective or was not humane? Or what was the basis of changing it?

Ms. DULEEP. I think that it was not humane and that——

Ms. JACKSON LEE. So we made a considered decision based upon past history.

Ms. DULEEP. Yes.

Ms. JACKSON LEE. Dr. Gingrey, I notice that your—is this your bill, the nuclear family bill?

Mr. GINGREY. Yes, it is.

Ms. JACKSON LEE. And it limits to the immediate family, and I guess my question to you would be would this be forever and ever, or would it be until the time that we get a construct in place that we have a legal immigration process?

Because I think to deny and put the structure of a nuclear family, which many of us don't come from, would be a serious concern. So are you putting a sunset on this, or is this forever and ever and ever?

Mr. GINGREY. Congresswoman Jackson Lee, there is no sunset on this, in response to your question.

But let me just say—and this is quoting from your predecessor, the late and great Congresswoman Barbara Jordan, and she says it is urged that nuclear family members, spouses and minor children, become the sole family-based priority. Those are the words of Congresswoman Barbara Jordan. And I could go on and quote the commission. But no, there is no sunset.

Ms. JACKSON LEE. My time is up.

Ms. LOFGREN. The gentlelady's——

Ms. JACKSON LEE. If I may just finish—one sentence, Madam Chair. As I started out, let me say that there are many things that the Honorable Barbara Jordan has mentioned. Many of them I agree with.

Others, I believe, in time have changed, and we are now looking to answer her concerns, which is a legal construct that is humane and is legal for the immigrants that are here in this country.

I yield back.

Ms. LOFGREN. Thank you. The gentlelady's time has expired.

Before calling on my colleague from California, I will note that there are currently limitations on unmarried sons or daughters to 23,400 visas a year. So that is the number a year.

And I was just telling Mr. King that if you have an unmarried son or daughter, to visit a U.S. citizen, 99 times out of 100 they will not get a visitor's visa as an unmarried child because of the intent to reside burden.

But I would call on Ms. Waters for her 5 minutes.

Ms. WATERS. Thank you very much, Madam Chairwoman. I first want to thank you for the intensive work that you are doing to help us get to immigration reform. And I appreciate all of the hearings that you are holding.

I was particularly interested in this one, not so much from the examination of the White House proposal. I am still focused on those undocumented elderly mothers, fathers, grandmothers and grandfathers that are in the United States now who are increasingly feeling at risk.

And I am worried about the separation of these parents and grandparents from their children and grandchildren with the emphasis on deportation that we see all around the country. And we will get to that.

I don't have a lot to say about this White House proposal except that I just disagree with it. I am from a huge family. I have 12 brothers and sisters. And I have strong family values.

We don't run around politicizing them and using them as a way to get elected to office. We are just people who have strong family values. And we don't consider unmarried 21-year-olds so adult that somehow they don't need us and that they are on their own.

And no, our family values have not changed because of technology. No, many of our family members would not be able to pick up and run to another country to see our so-called adult children.

And so I just think that the Bush administration proposal certainly undermines family values, and it is harsh.

In addition to the elimination of so-called unmarried adult children of both the USCs and the LPRs, this business of requiring new applicants from all of those currently waiting in the backlog with an additional fee of $500 per person—some of these people have been waiting in line for years.

Why would we do that to them? That is so unkind. And to nullify the applications of those who applied after 2004, 2007, people who have been waiting in line even for just 3 years or 2 years, knowing how long it takes, as it has been described here today, where people have been waiting 10 years, 12 years, 13 years, 14 years, 15 years, this is the most unkind, non-family-valued proposal that could ever be produced.

And I am hoping that it will be soundly rejected by this Congress, because I don't think that anybody who holds family values dear could support something like this.

Now, having said that, I look forward to some protections for the longtime residents who happen to be undocumented.

And to my colleague from Texas who said that the folks who left are the ones who should be accused of not having the strong family values, I would just say that you know——

Mr. GOHMERT. Would the gentlelady yield? That is not what I said.

Ms. WATERS. Well, okay, I am sorry. Maybe I mischaracterized what you said. You said don't blame it on the United States, blame it on those who separated from their families and came here. Is that correctly stated?

Mr. GOHMERT. I said that is who separated from the family.

Ms. WATERS. Okay. They separated. Don't blame it on——

Mr. GOHMERT. But I certainly didn't say that——

Ms. WATERS. Okay.

Ms. LOFGREN. The gentlelady controls the time.

Ms. WATERS. Yes. I am modifying, because I want to be sure that I understood what you said. You said don't blame it on the United States, they are the ones who separated from their families.

And of course, we don't have to rehash the fact that people do seek a better way of life, that poverty will do that, that hunger will do that. People who are watching their babies die from lack of medicine, lack of food, et cetera, yes, they will seek a better way of life.

And unfortunately, many of them did that, and many of them have been here now for 35 years and 40 years, 50 years. They have children who were born here. And I am worried about the deportation and the separation of families.

And why, again, do I worry about this so much? Aside from having strong family vales, I am an African-American woman who comes from slaves, where families were separated for economic reasons, where children were sold off, where relatives were sent to different parts of the world. And so I feel very strongly about this.

And I want to thank the Chairlady for her sensitivity and her focus on this.

Ms. LOFGREN. The gentlelady's time has expired.

The gentleman from California, Mr. Gallegly, is recognized for 5 minutes.

Mr. GALLEGLY. Thank you, Madam Chairman.

Dr. Duleep, when we grant an alien the privilege of immigrating to this country, do you believe that there is an inherent obligation to eventually allow their entire family, extended family, to immigrate?

Ms. DULEEP. No, I think a country can decide immigration policy. And I think that is what is being debated here today.

Mr. GALLEGLY. No, I just want to get your assessment. Do you think that that, granting that privilege, we, as a Nation, in your opinion, have an obligation to allow eventually the entire family to immigrate?

Ms. DULEEP. I don't have a problem with that.

Mr. GALLEGLY. So you would support that thesis.

Ms. DULEEP. Yes.

Mr. GALLEGLY. Okay.

Dr. Gingrey, you know, we heard a lot of numbers bounce around, as we always do, and there is that hypothetical 273 number. Let's forget about the 273 number just for a minute.

And there is a lot of talk about amnesty. There is a lot of talk about comprehensive immigration reform, another code word for amnesty.

Whatever we call it, if we allow 12 million to 20 million, depending on what the real numbers are—and none of us really know. But let's say that we accept the fact that somewhere between 12 million and 20 million people have no legal right to be in this country.

And we are not going to do a blanket amnesty, but we are going to find a way to allow them all to stay and find some form of legal status, eventually.

Let's say we forget about the 273 number. But hypothetically, I think it would be very realistic that once they get that status that they would have probably, in the most conservative way, a minimum of probably two per individual that have gained status that would have a family member that would qualify for reunification or sponsorship or whatever. Is that fair?

Mr. GINGREY. Yes, that is fair. And really, as I pointed out earlier in talking to Mr. Berman, yes, this is the extreme. This is the extreme situation. But this is Murphy's Law. And we all know Murphy's Law. The extreme can happen.

Mr. GALLEGLY. But the 273 is extreme. I think that two, which would be one-one-hundredth that, would be very conservative. Is that a fair assessment?

Mr. GINGREY. It is.

Mr. GALLEGLY. Now, if we take the most conservative number of 12 million that are here now, and not even talk about the 20 million, instead of 12 million coming in under a new form of immigration reform status, comprehensive, amnesty, whatever word you want to use, that 12 million translates to a conservative minimum of 36 million.

How do we deal with that? How do we reconcile that?

Mr. GINGREY. Well, without question, Mr. Gallegly, amnesty plus family reunification as we now interpret it would, as you point out, lead to a minimum of an increase of 12 million to 30-something million. And I think your math is accurate.

Mr. GALLEGLY. Thank you, Madam Chairman.

I would yield to the Ranking Member, Mr. King.

Mr. KING. Thank you, Mr. Gallegly.

I had a lingering question for Mr. Anderson. And it had to do with a statement that I heard in your testimony about immigrants being slightly better educated than native-born Americans. And I think that has been historically true for over a century.

But I would ask you, if we provided amnesty or legalized the 12 million to 20 million that are here, if you would still be able to make that statement, just speaking about that group of immigrants—would you then take the position that the illegals that are here are slightly better educated than the native-born American?

Mr. ANDERSON. No. That is not the case. I mean, I do think that what Dr. Duleep talked about, that once people—and I think there has been studies on this, that once people gain legal status, they

tend to have a much greater incentive to invest in their own skills, because they are going to be here for the long term.

So I think you would see——

Mr. KING. Let me ask you, then——

Mr. ANDERSON [continuing]. You would see some of those skill levels increase.

Mr. KING. With that point in mind, have you studied the Rector study that studies the households that are headed up by high school dropouts?

And I know there is a distinction now between legal and illegal and a slightly different impact, but Mr. Gingrey referenced that.

Have you studied that——

Mr. ANDERSON. I have looked at it. I haven't studied it, so I don't want to comment on whether it is right or wrong.

Mr. KING. Has anyone else on the panel taken a look at that study?

Ms. DULEEP. I have read it.

Mr. KING. And do you have any rebuttal you would like to offer the panel?

Ms. DULEEP. Well, I think the problem of poorly educated immigrants can be a problem, but I think that is particularly a problem where you have groups where they don't have permanence here, where there is a lot of going back and forth.

So I think to address that issue that people who come here legally or illegally—that permanent communities should be encouraged.

Mr. KING. Thank you, Dr. Duleep.

I would yield back to——

Ms. LOFGREN. The gentleman's time has expired.

The gentleman from Massachusetts is recognized for 5 minutes.

Mr. DELAHUNT. I thank the Chair for the time.

As I listen and hear the various perspectives here, you know, the definition of a nuclear family and the kind of change that is being proposed by Dr. Gingrey—it could conceivably have an impact on highly skilled immigrants.

I would, you know, put forth to all of you—and you, too, Phil—that determinations to come to this country, particularly if you are a highly skilled worker, could very well be impacted by denying an individual the capacity to bring his or her adult children to this country.

I mean, am I making it up? Should we be concerned about that? I mean, you know, time after time this Committee has made decisions based on H-1Bs, high-tech, where American corporations have been aggressively and actively soliciting specialized skills.

I think I, for one, if I had restrictions on who could come with me and who could resettle in this country, I would very well consider opting for employment elsewhere that is available.

Mr. GINGREY. Mr. Delahunt, if I could respond to that, the commission, the Jordan commission—and I quote from that report: "A properly regulated system of legal immigration is in the national interest of the United States. Such a system enhances the benefits of immigration while protecting against potential harm."

Unless there is a compelling national interest to do otherwise, immigrants should be chosen on the basis of the skills that they contribute to the United States economy.

The commission believes that admission of nuclear family members—spouses, dependent children—and refugees provide such a compelling national interest. Reunification of adult children and siblings of adult citizens solely because of their family relationship is not as compelling.

In response to your question, I would say, Mr. Delahunt, that you are much more likely to get a skilled worker, who you know their skills when they apply, than just take a potluck from a family reunification, some of whom may be skilled but many of whom may not be skilled at all.

Mr. DELAHUNT. With all due respect to my friend and colleague from Georgia, I know that if I had any skills at all, and I was living elsewhere, and I had a family where the children were of a majority age, and because in the bill that you put forth you denied me the opportunity to bring my family, I would say, "Forget it." I think we put ourselves in a position where we lose something.

Would any of the other panelists wish to comment?

Mr. ANDERSON. Yes. I am not sure we want to set our immigration system up to encourage the immigration of somewhat skilled people who don't care about their families. I mean, that is kind of what we are getting at here.

I mean, what we really want to—I mean, I just go back to this again, that all this talk about skilled immigration—the business community, employers, are not in favor of establishing some new sort of point system or anything like that. They want to have an expansion of the current system. They don't want to have a divisive fight over family immigration.

And they also believe that, you know, when executives come here, if their children are over 21, they aren't going to get them here, and you are not going to get some of the foreign investment that might take place if people know that their children aren't going to be able to——

Mr. DELAHUNT. Reclaiming my time and going back to my friend from Georgia, you indicated 250,000, I think it was in 1975, and a million now. But these are all legal immigrants, is that correct?

Mr. GINGREY. Correct.

Mr. DELAHUNT. So your problem is you think the numbers coming into this country in terms of legal immigrants are of an order of magnitude that, you know, we don't need in this country.

Mr. GINGREY. Well, correct. And I think the policy of this family reunification is basically a come one, come all.

My friend Mr. Anderson just said that the employers are not for us restricting this to skilled workers. Maybe not. Maybe a few of the miscreant employers would love to see more and more unskilled workers come so they could pay them low wages.

Mr. DELAHUNT. Well, again, reclaiming my time, I just wonder where our economy would be if we had stayed at that 250,000 figure as opposed a million legal workers or legal immigrants coming into this country now and adding to the GDP.

Professor Hing? I mean, I think that is the debate we are having.

Mr. HING. Well, Congressman, you hit the nail right on the head, because people would make those decisions to not come, and they wouldn't contribute.

There is a reason why the preamble to the Universal Declaration of Human Rights highlights the unity of family as the foundation of freedom, justice and peace of the world. It is because our families make us whole and our families define us as human beings.

Mr. DELAHUNT. No, but with all due respect, though, I am talking about the economic impact. If over the last 25 years or 30 years, we did not have the numbers of legal—not illegal or undocumented, the legal—immigrants coming into this country to provide an adequate workforce, what would have happened? Can you speculate in terms of our national economy?

Ms. LOFGREN. The gentleman's time has expired. We will ask Mr. Hing to briefly respond.

Mr. HING. Right. The number of jobs that have been created, top to bottom, construction workers to high-tech, would have been decreased and the amount of investment would have been decreased in the United States.

Ms. LOFGREN. The gentleman's time has expired.

And all time is expired. I would like to thank all the witnesses for their testimony today.

And, without objection, Members will have 5 legislative days to submit any additional written questions for you, which we will forward and ask that you answer as promptly as you can to be made part of the record.

And, without objection, the record will remain open for 5 legislative days for the submission of any other additional materials.

Our hearing today has helped to illuminate numerous issues concerning family and immigration reform. This discussion will be very helpful to us as we move forward on comprehensive immigration reform this year.

We have learned in this hearing that family immigrants are part of the entrepreneurial picture of the United States and that the current immigration system actually tracks family as separate from employment-based immigration.

We know that as we move forward there may be a discussion on whether to merge those two lists in a point system so that family immigration and employment immigration would instead be in competition with each other for visas, and that is something that this Committee and the Congress must consider very carefully.

I would like to note also that this, as our eighth hearing, has shed much light. And I am actually very optimistic that the information that we have learned here will head us to a bipartisan comprehensive approach to the issues that face us, that make sure that our country continues to prosper economically and culturally and socially.

I would like to extend an invitation to everyone here to attend our next hearings on immigration reform. The minority at our last hearing requested under the rules an additional hearing, which will be held tomorrow in this room at 9 a.m.

We will have two hearings next week, Tuesday, May 15th, at 9:30 in the morning and again at 2 in the afternoon. We will ex-

plore the future of undocumented students and additionally the integration of immigrants into American communities.

And with that, this hearing is adjourned.

[Whereupon, at 11:23 a.m., the Subcommittee was adjourned.]

APPENDIX

Material Submitted for the Hearing Record

"CHAIN MIGRATION UNDER CURRENT U.S. LAW: THE POTENTIAL IMPACT OF A SINGLE EMPLOYMENT-BASED IMMIGRANT" CHART PRODUCED BY NUMBERSUSA, SUBMITTED TO THE RECORD BY THE HONORABLE PHIL GINGREY, A REPRESENTATIVE IN CONGRESS FROM THE STATE OF GEORGIA

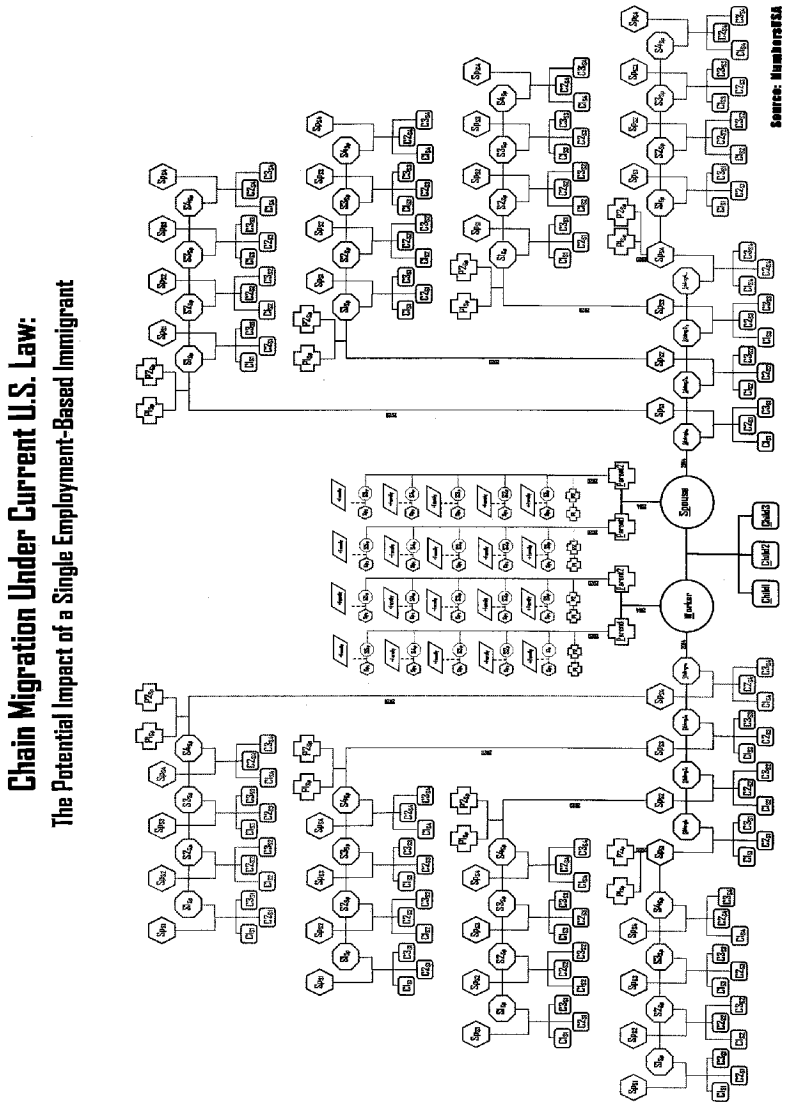

Current U.S. immigration law sets out several categories of relatives a citizen or Lawful Permanent Resident (LPR) of the United States may petition to bring here. Some of these are numerically capped; others are unlimited. The categories are:

1. **Immediate Relatives**—the spouse, minor children, and parents of adult U.S. citizens; no numerical limit.
2. **Family-Preference Categories:**
   - *Family 1st Preference*—Unmarried, adult children of U.S. citizens; capped at 23,400.
   - *Family 2A Preference*—Spouses and minor children of LPRs; capped at 114,000, with a floor of 87, 934.
   - *Family 2B Preference*—Unmarried, adult children of LPRs; capped at 26,266.
   - *Family 3rd Preference*—Adult, married children of U.S. citizens, plus their spouses and minor children; capped at 23,400.
   - *Family 4th Preference*—Siblings of adult U.S. citizens, plus their spouses and minor children; capped at 65,000.[1]

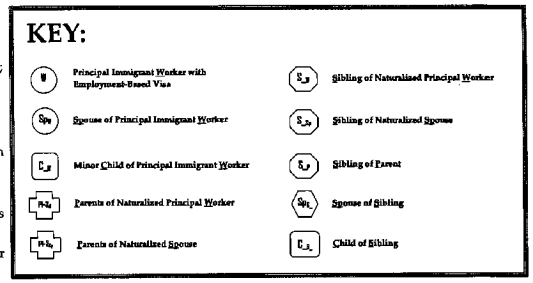

The chart reflects the following assumptions, all of which are provided for under current U.S. immigration law:

- One worker (W) is granted an Employment-Based (EB) immigrant visa in 2008;
- This worker hails from a developing country with a Total Fertility Rate (TFR) of 3.0 children per woman;[2]
- The worker brings a spouse and three children to the United States with him (the spouse and children would be issued EB visas, as well, since they are accompanying the worker);
- The worker and his spouse and children naturalize in 2014 (they become eligible in 2013, but one year is added to account for the time it takes to process their applications) and the worker and spouse petition for their parents and siblings;
- The extended families of both the worker and his spouse are all alive and reflect the average TFR of the developing world at the relevant time (i.e., during their child-bearing years); and
- It takes one year for the extended family members to be approved and granted immigrant visas (it could take significantly longer than one year depending on the country from which they are coming due to visa backlogs resulting from the caps on the family-based immigrant categories and the per-country limit on most family- and employment-preference visas, which, under current law is about 26,000 visas annually for independent countries).

The chart shows what happens when the worker and his spouse naturalize and bring in their parents and siblings, along with the siblings' spouses and minor children. Then, the parents and the spouses of the siblings naturalize after five years of LPR status and bring in their own parents and siblings, along with the siblings' spouses and children. It is this endless "chain migration" of adult relatives and in-laws that drives annual, legal immigration levels higher every year and creates pressure to increase category caps because of ever-growing waiting lists. The long waiting lists, in turn, fuel illegal immigration, as people begin to develop a sense of entitlement to move to the United States.

Based on the above assumptions, the approval of an employer's petition to import a single permanent foreign worker could result in the permanent immigration to the United States of 273 individuals, not including the 100 or so cousins of the worker and his spouse (the children of the siblings of their parents) who are represented in the chart only as "+ family" due to space limitations.

[1] The family-preference immigration categories are all over-subscribed. Mexicans and Filipinos must wait significantly longer than other visa applicants due to higher than average application rates for each category. Mainland Chinese and Indians have longer than average waiting times for sibling visas.

[2] The Total Fertility Rate is the average number of children each woman will have in her lifetime. Examples of sending countries with a TFR of 2.8-3.2 include: India, the Philippines, El Salvador, Nicaragua, Peru, Venezuela, Bangladesh, and Malaysia. In much of the developing world, the TFR is significantly higher than three children per woman. According to the United Nations Population Division, the TFR in "less developed countries," where about 5.3 billion people live, was 2.9 in mid-2005. In "least developed countries," where another 800 million people live, the TFR was 5.0 in mid-2005.

Chain Migration Under H.R. 938, The Nuclear Family Priority Act

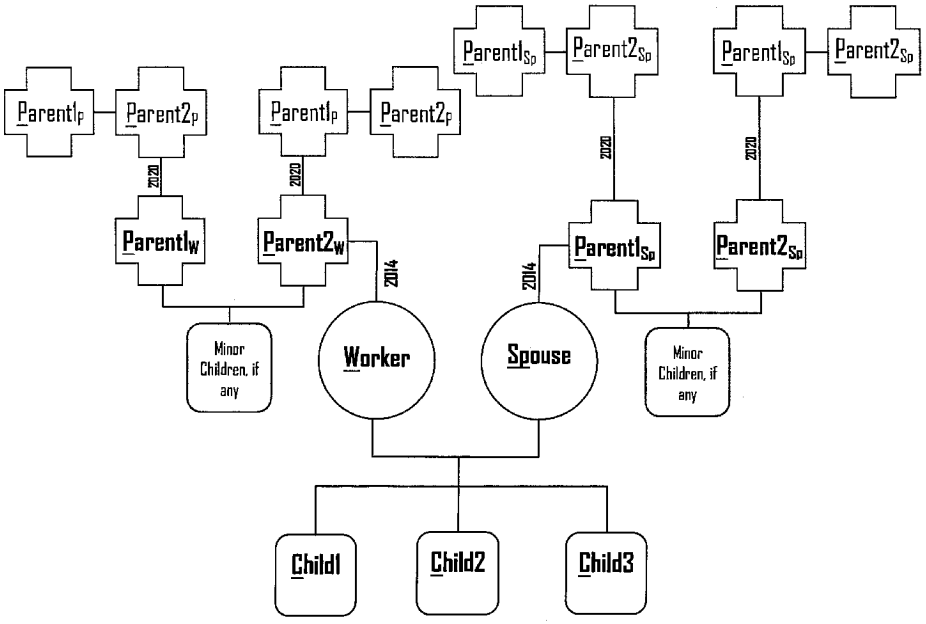

Source: NumbersUSA

Current U.S. immigration law sets out several categories of relatives a citizen or Lawful Permanent Resident (LPR) of the United States may petition to bring here. Some of these are numerically capped; others are unlimited. The categories are:

1. **Immediate Relatives**—the spouse, minor children, and parents of adult U.S. citizens; no numerical limit.
2. **Family-Preference Categories**:
   - *Family 1st Preference*—Unmarried, adult children of U.S. citizens; capped at 23,400.
   - *Family 2A Preference*—Spouses and minor children of LPRs; capped at 114,000, with a floor of 87, 934.
   - *Family 2B Preference*—Unmarried, adult children of LPRs; capped at 26,266.
   - *Family 3rd Preference*—Adult, married children of U.S. citizens, plus their spouses and minor children; capped at 23,400.
   - *Family 4th Preference*—Siblings of adult U.S. citizens, plus their spouses and minor children; capped at 65,000.[1]

H.R. 938, the Nuclear Family Priority Act, would end most chain migration by eliminating all the family-preference categories except the Family 2A Preference for the spouses and minor children of Lawful Permanent Residents (LPRs). The only remaining possibility for limited chain migration under this bill comes from the fact that the parents of U.S. citizens would still fall within the Immediate Relative category. As the chart indicates, if a worker and spouse naturalize and bring in their parents, those parents would be entitled to bring with them any minor children they may have. Once the parents naturalize, they would be able to bring over their own parents. In all likelihood, the chain would end there, since by the time the worker's and spouse's grandparents naturalized (a minimum of 15 years after the worker and spouse arrived), the grandparents' parents would probably be deceased.

The fact that extended relatives and in-laws could not come to the United States as family-preference immigrants under H.R. 938 does not mean that they would not be able to come at all. They would still be free to seek permission to visit their U.S.-based relatives as tourists, or they could seek an immigrant visa on the basis of needed skills.

The chart reflects the following assumptions:

- One worker is granted an Employment-Based (EB) immigrant visa in 2008;
- This worker hails from a developing country with a Total Fertility Rate (TFR) of 3.0 children per woman;[2]
- The worker brings a spouse and three children to the United States with him (the spouse and children would be issued EB visas, as well, since they are accompanying the worker); and
- The worker and his spouse and children naturalize in 2014 (they become eligible in 2013, but one year is added to account for the time it takes to process their applications) and the worker and spouse petition for their parents.

[1] The family-preference immigration categories are all over-subscribed. Mexicans and Filipinos must wait significantly longer than other visa applicants due to higher than average application rates for each category. Mainland Chinese and Indians have longer than average waiting times for sibling visas.

[2] The Total Fertility Rate is the average number of children each woman will have in her lifetime. Examples of sending countries with a TFR of 2.8-3.2 include: India, the Philippines, El Salvador, Nicaragua, Peru, Venezuela, Bangladesh, and Malaysia. In much of the developing world, the TFR is significantly higher than three children per woman. According to the United Nations Population Division, the TFR in "less developed countries," where about 5.3 billion people live, was 2.9 in mid-2005. In "least developed countries," where another 800 million people live, the TFR was 5.0 in mid-2005.

"REVIEW AND OUTLOOK: IMMIGRATION SPRING," AN EDITORIAL IN THE *WALL STREET JOURNAL*, MAY 2, 2007

The Wall Street Journal

Review and Outlook

Immigration Spring

May 2, 2007

Yesterday's May Day immigration demonstrations dominated cable TV, but they were more sound than substance. The bigger news is the recent Journal report that illegal border crossings have slowed by more than 10% this year. The Bush Administration credits stepped-up enforcement, but our guess is that the cause is mostly labor supply and demand.

A slump in the housing market has resulted in fewer jobs in the building trades, which are increasingly filled by Latino immigrants. With fewer jobs available, fewer immigrants are headed north. It's another example of the market's ability to determine how much foreign labor our economy needs. It also indicates that immigrants come here primarily to work, not to idle and collect welfare.

We'd like to think these economic realities will inform any legislation produced this year. Based on the selective leaks from Capitol Hill, it's hard to know what kind of "reforms" Congress is cooking up. But smoke from the backroom suggests that the status quo might be preferable to some of the proposed bipartisan compromises. Given that illegal immigration is caused above all by a worker shortage for certain types of jobs in the U.S., any reform that doesn't take into account labor-market needs won't solve the problem and risks making matters worse.

Unfortunately, the immigration draft proposal recently circulated by the Bush Administration all but ignores the economic factors that drive illegal immigration. Aside from that, the proposal is unduly restrictive and thus probably unworkable.

Its anti-family provisions would end the ability of U.S. citizens to sponsor their parents, children and siblings for immigration. In addition to departing from U.S. tradition, this would have a damaging impact on immigrant entrepreneurs, who typically rely on relatives -- think of your dry cleaner or the corner bodega -- to help run their small businesses. It's also a startling about-face for President Bush, who promised immigration reforms that would "encourage family reunification" and repeatedly has said that "family values don't stop at the Rio Grande."

As for dealing with the estimated 12 million illegal aliens already here, the White House is bowing to GOP restrictionists. To gain legal status, an immigrant would have to pay $3,500 in fines and fees for a three-year visa. He could renew the visa once, for another three years (and another $3,500). To get permanent legal residency, he'd have to return to

his home country and pay an additional $10,000 fine to re-enter the U.S. (if and when the application is approved).

Such measures all but guarantee low compliance. Few illegal immigrants will be able to afford the steep fines, and fewer will want to come forward if it means giving up their jobs for weeks or months to return to their native countries. This so-called "touch-back" provision will be viewed in the migrant community as deportation by other means. Returning to the U.S. is unlikely to be as easy as advertised, as red tape is deployed to discourage re-entry. The result would be that most illegals would stay in the shadows.

The proposal's guest worker provision for handling future labor flows is also problematic, as Stuart Anderson of the National Foundation for American Policy points out in a recent paper. It would require an immigrant to pay $1,500 to obtain a visa good for two years, at which time he would be required to return home for six months. This amounts to a tax on workers and a needless disruption for both immigrants and employers. Businesses want to retain their best workers, not see them sent home by the feds according to some arbitrary two-year deadline. Instead of matching jobs with workers, this kind of guest worker provision would merely encourage a black market in labor.

We hope a compromise is still possible, and we think a realistic guest worker program would make sense both for the U.S. economy and the needs of post-9/11 security. But any policy overhaul that provides little incentive for illegals in the U.S. to acknowledge their status, and then prices legal entry out of reach for most future workers, is likely to increase illegal immigration. Which is to say that any reform failing to recognize labor market realities is worse than no reform at all.

PREPARED STATEMENT OF MEMBERS OF AMERICAN FAMILIES UNITED AND UNITEFAMILIES, ON FAMILY IMMIGRATION

Testimony of
Members of American Families United and UnitedFamilies
on
Family Immigration
for
House Subcommittee on Immigration, Citizenship, Refugees, Border Security, and International Law

The members of American Families United and UniteFamilies.org are United States citizens and Legal Permanent Residents who have joined together to promote a package of reforms to overcome obstacles that currently keep families apart in the legal immigration system. Family unity is a crucial pillar of U.S. immigration law, and we trust this Congress will enact comprehensive immigration reform which reinforces that principle.

So our members are honored and grateful for the opportunity to provide testimony to the House Subcommittee on Immigration, Citizenship, Refugees, Border Security, and International Law on the critical issue of family unity and the need to reform our system for legal immigration, benefiting both US citizens and legal immigrants in order to serve the national interest. These are the five reforms we propose, with examples and legislative language.

1) Immediate Relative Status for Lawful Permanent Resident Nuclear Families.

The first of the reforms we are seeking is Immediate Relative Status for Lawful Permanent Resident Nuclear Families. This proposal would make no change in the status of parents, adult children, or siblings of these permanent residents. This is not a matter of extended family relationships, but newly formed nuclear families: newlyweds and families with young children, when extended separations are the most damaging and contrary to our nation's values. We propose that nuclear families of legal immigrants residents be treated in law as the immediate relatives that they are in fact.

Testimony follows from some of our members who are dealing with this issue under the current laws:

Testimony of Amir Nikpouri, U.S. Permanent Resident, Chicago, IL

In 1989, when I was 13 years old, my family migrated from Iran to the U.S. After many years of waiting and more than $30,000 in attorney fees, on July 22, 2004, I became a permanent resident. In 2005, I traveled to Iran to visit my sister and my extended family. At a family gathering, I met a young lady. I never thought I could have so many things in common with a person. I realized after a short while that she was the one for me. A few short months later, we decided to tie the knot.

I run a retail business that involves purchasing, management, marketing, and selling. Prior to my marriage, I employed close to 70 people. Sales tax collection averaged over $120,000 a month. My business has done this for more than 10 years. Sadly, due to the separation from my wife, my business has just fallen apart.

I try to spend three months in a year with her in Iran. When I am away, although I hire good American citizens to work on my behalf, the financial impact on my business is tremendous. Sales have gone down 80%. Sales tax collection now averages almost $20,000 a month. Profit level has dropped dramatically and so has the income tax. Due to the decrease in sales, I now employ only 30 people. This business, when run well, can employ more than 70 people. I suffer both emotionally and financially due to the separation from my wife. I urge the Subcommittee to help pass legislation that will allow me to live under the same roof with my wife in the U.S.

Testimony of Vinodev Rajasekaran, US Permanent Resident, CA

I have worked in California for 7 years. I filed my I-485 in June 2004, expecting that it would take a year or more to get my green card. At that time, my wedding was planned for December 2004. I became an LPR barely 3 months after filing for my I-485, an almost unheard-of speed of processing by the USCIS. I married an Indian citizen in December 2004. Due to the nature of the U.S. immigration laws, I had to leave my wife in India and return to the U.S. just a few days after our wedding. Unable to take the lengthy separation from my wife, I quit my job in June 2005 to go to India. I had to return to the U.S. after 5 months since I risked losing my green card with a lengthier stay. Once in the U.S., I searched in vain for short-term projects. In my area of expertise, computer hardware design, it is difficult to find a temporary or short-term job. In 2006, I went back to India for 5

months to be with my wife. I returned to the U.S. at the end of 2006 and started looking for a job. Most companies were not interested in hiring me as I was out of work for almost 2 years.

Finally, I landed a job in April 2007. In the interim, I did not earn a penny. Not only did I suffer, the U.S. treasury suffered as well. Annually, I pay around $30,000 in taxes. Since I did not work for 2 years, the U.S. government lost $60,000 just from me. My wife holds a bachelor's degree in Business Administration. She has extensive work experience in marketing and advertising. The irony is when I filed taxes, I had to file tax on my wife's foreign income as well. I feel cheated! The U.S. government wants my wife's tax money but does not want her.

I urge the Subcommittee to pass legislation that ensures speedy family unity for LPRs.

Testimony of Ekaterina Atanasova, U.S. Permanent Resident, ME

I received my green card in September 2003. My husband Nikola Nikolov and I have always been "together." We were neighbors in Bulgaria, went to college together and dated for 8 years before marrying in 2004. I petitioned to have Nikola come to the U.S., only to discover that due to visa limitations and the gargantuan backlog of visa applications facing USCIS, it will take at least 5 years before my husband can come to America. I live in Eliot, Maine, and work as a civil engineer in Portsmouth. I fly to Bulgaria at every opportunity to spend time with my husband. Though it costs roughly $1,000 for every round trip to Bulgaria, it's the emotional cost, not the financial hardship that is toughest to bear. Nikola has a master's degree in Structural Civil Engineering and has carried Professional Engineering license for the past year. He is a Project Civil Engineer in Bulgaria. If he were to join me, he would be a contributing member to community of Eliot, ME and would in no way be a burden to society.

Testimony of Hans Buwalda, U.S. Permanent Resident, CA

Known as the "happy tester," I am a recent LPR and a successful job-creating entrepreneur in Silicon Valley. I'm considered a major force in my industry of software testing, and my methods are used on a wide scale, in hundreds of organizations ranging from Microsoft and NASA to Homeland

Security. If you enter my name in a web search engine like Google, you can read more about what I do.

For about a year, I have been dating a very nice woman who I want to marry and share my life with. However, she is not from the U.S., and since I'm a recent green card holder, marriage would put us in the F2A trap for 5 years or more. During that time she can't visit me in the U.S., and our business does not allow me more than at best a few weeks per year off. As with many other single green-card holders, I wasn't aware of this problem. The strange, and unintended, effect of the current legislation is this: Once I became a green-card holder, the law prescribed which woman I can and cannot marry.

Leaving the business is also a draconian option. I can easily move back to the Netherlands, but our business is doing very well here. We have a lot of growth and are constantly looking to hire talented people. My role as CTO and partner, and my name in our industry, are important to further drive this success. I'm confident that the responsible lawmakers will find the time, and the heart, to fix this silly, but very hurtful, issue.

Testimony of Virginia Bernard, U.S. Permanent Resident, NY

I have lived in the U.S. for 9 years, and have been a permanent resident since 2003. My fiancé lives in Essaouira, Morocco. We have had to conduct a long-distance relationship for the past four years due to my inability to obtain an immigrant visa for him and bring him to the U.S. as my husband, because of the 6-year backlog for immediate relatives of lawful permanent residents.

Aside from the emotional hardship of our extended separations, the situation has caused economic hardship for both of us. I have spent more than $20,000 in airfares to Morocco in order to see him and maintain our relationship, money that could have been spent living our lives in New York. While obviously this is a personal decision on my part, I did not realize at the outset that we would be subject to this cruel backlog, and once I did know I felt confident that this unfair and family-unfriendly visa situation would change. Unfortunately, it hasn't and our only alternative has been to wait for my eligibility to apply for U.S. citizenship in 2008, when I will be able to bring him here relatively easily as my spouse, most likely in about two years from now. Alternatively, we could settle in Australia, my native

country, which I am still considering (at a loss to the U.S. economy of approximately $30,000 per annum in city, state, and federal taxes).

My fiancé works in the building and design industry. He is a talented and hard-working man who would in no way be an economic burden as a U.S. immigrant. I work as a Senior Editor for the world's largest educational publisher – Pearson Education. I write and produce books for U.S. immigrants who are learning English. Directly and indirectly in my daily life, I help new arrivals in this country learn English so that they can create better and more successful lives for themselves and their children. And yet I cannot bring my partner here to live with me. Is this fair?

I do hope that Chairwoman Lofgren and the Subcommittee members will hear our voice and act to fix this unjust law.

Testimony of Muhammad Rizwan Atique, U.S. Permanent Resident, MN

I am a Lawful Permanent Resident (LPR) since 2005 and have been working for a hearing aid manufacturing company for the last 6 years as a Senior Programmer Analyst. I got married in 2006 in my country of birth. My wife lives in my country of birth and is a Graphics Design student. I could not bring her with me to the United States after marrying her since the current law prohibits an LPR from bringing his/her spouse to the US right away. They have to wait in excess of six years at-least to join their spouses. My wife and I have been deprived of living together for the last 15 months. I believe that with her talent in Graphic Design, she can also play an equally effective role in this society.

It has been getting difficult for both of us day by day as we miss each other not only on special occasions, such as birthday and anniversaries, but also every day we miss one another and are hoping to be reunited soon. It is severely affecting my daily life. I have a hard time concentrating at my job and instead of being proactively working and paying attention to my job, I am depressed and I feel that my professional career will be at stake if something is not be done soon to help our situation. But that is possible only if Congress can enact Comprehensive Immigration Reform with a provision to treat spouses of LPR as the immediate relatives that they are and keep the sanctity of family unity alive.

Testimony of Aliya Ouro-Gnaniv, U.S. Permanent Resident, NY

I am a US green card holder. I hold a BS degree from an American College and am currently working for the State of New York as an insurance examiner/auditor since 2001. I have been working and paying taxes, contributed to social security and Medicare since 1991. I have contributed to my pension plan since 1994. I have a deferred compensation plan which is invested in the US market.

Prior to obtaining my green card I visited my country on an evangelical mission in 2003 and met my wife. I returned in April 2004 for our wedding. My wife has a college degree in Sociology and is employed at her country's (Togo) Airport Company as Properties Manager. Prior to being appointed Property Manager she was in charge of the staff training. My dilemma is that the US immigration law will not allow us to live together now, thus we have to wait for 7 or more years before my wife can join me. I believe that the US has given me what no any other country can; however, in this matter of separation from my dear wife it makes me forget all the good things about this country. My wife and my daughter, according to the US immigration law, are not considered immediate relatives. My wife is not even allowed a visiting visa – even if she can prove that she will return to Togo – because she is considered an intending immigrant. We have considered enrolling her in a masters program in social research but we were advised that she will not be granted a visa because her husband is in the US and, therefore, she would be considered an intending immigrant.

Because of the cost involved and the fact that I have a limited leave time from work, I can only visit her once a year. This situation is weighing on me and my wife both emotionally and financially. Most of the time I find myself thinking so much that I lose focus even at work and I believe it is having an impact on my job performance. I strongly believe in marriage and I believe, as the bible says, "What God has joined together let no man put asunder." Please help me and thousands of others in this situation by including in the comprehensive immigration reform provisions to treat the spouses and minor children of LPRs as the immediate relatives that they are and keep the sanctity of family unity alive. Thank you.

Testimony of Mohan Babu, U.S. Permanent Resident

I am a taxpaying Legal Permanent Resident and, hopefully, a future citizen of the United States. I came to the US to study and work. I have a masters degree (MBA) from the University of Colorado and have been legally living and working in America since 1997. I am currently an IT Architect, working for a software services company. I got married in 2004 and spent a year in India with my wife before moving back to the US in order to retain my Green Card Residency.

My wife currently lives and works in Toronto, Canada where I visit her regularly. I have petitioned for her immigration visa (I-130) but I could not bring her with me to the United States as the current law prohibits an LPR to bring his/her spouse right away. We have been deprived of living together for the past two years, causing undue hardship on our matrimonial relationship. Why are LEGAL immigrants forced to live in separation from our wives/husbands for over five years? I request that lawmakers to consider the plight of spouses of Legal Permanent Residents and provide the right solution by allowing spouses to live together in the US legally.

Aleksey LPR living in NY

Looking for somebody to build my family I went through many places, internet sites, asked many friends, but couldn't find anybody on US who I would like to see as my wife.

Finally I decided to go to my native country, Russia, to find a woman of my dream. I knew I may face complicated immigration problems, but I wanted to be happy and I ignored all warnings of my friends and my parents.
I went to Russia many times on my vacations, visited all my university and school friends and I found Her: my sweetest dream.

I spent many months of 2003 and 2004 with her in Russia - living in her parent's apartment for a couple of weeks and then in my parent's apartment for a couple of months. We had a very good time traveling many places in Russia and spent 2 weeks in Turkey and 2 weeks in Egypt summer resorts in the fall of 2003, skiing for a week in Bulgaria on New Year eve of 2003/2004.

We got married in winter 2004 on St. Valentine's Day; it was like a dream come true. I filed an I-130 petition (petition for spouses of LPRs) with the USCIS when I came back to US after our sweet honeymoon.

We both knew that it will take a long time to wait to be able to live together, but we had no other choice. We wanted to live together in American dream. I hoped that during or after the election year US congress would help us to be united. I still hope this thing can happen.

We've spent summer 2004 together and visited St. Petersburg, and beautiful quiet Black Sea resort in Russia. After that I had to come back to US to work as I had spent all my money I had saved during previous years through hard work. But I didn't want to spend a dollar anywhere else except when we are together. I try to save as much money as possible and save on food, car, apartment and medical insurance. My financial situation is tough because I earn about 50% of what I could earn if we were together in US. My employment history become scattered from short-term contracts and I become less and less attractive for future good permanent jobs. Immigration rules are really pushing my life down to poverty.

The main question you may ask is why I can't abandon my American dream and go back to my native country to live with her. Well, I've spent 5 years working in the US first on h1b visa and then as permanent resident and can have a stable future and retirement. I have many friends in NY and I don't even see how I would build my future in Russia where I never obtained even a tax id number. American way of life, of freedom and opportunity made me look at things differently and don't think I can adjust myself back.

It's very sad and inhumane, that US immigration law doesn't even permit me to spend more than 6 months in a year with her without risk of losing my lawful permanent resident status in US. I would be very happy to spend with her as long time as it takes waiting for immigration backlog, but as of right now I have to keep working and paying my taxes to follow strict and evil US immigration rules that force me to stay in US to keep greencard. So I have nothing to do during most of my evenings and weekends, but sit alone in a small cheap studio apartment and watch my saved video and photographs from all our trips, dreaming about better future, thinking about a way out of this situation and suffering over evil rules that US Congress made resulting me and my wife 6 years separation.

Why do we have to abandon American dream to be able to live together ?

Testimony of Vince Gutierrez, U.S. Permanent Resident

I became an LPR in May 2004. I waited 10 years for my visa and had to put off getting married until then. I married my wife in March 2005 and now have a 1 year old baby boy. Due to immigration restrictions, neither of them can visit me here while other legal residents such as H1's and F1 visa holders are allowed to bring their family. I do not see how this is fair since as LPR's we are making a commitment to live in this country yet we are being punished. My son has been alive on this earth for 15 months and I have only been able to see him a combined 1.5 months. I really wish something could be done for people who actually follow the law and abide by the rules.

Testimony of Tuomo Aho, U.S. Permanent Resident, CT

I am a lawful permanent resident. I currently live in Connecticut but before moving here I completed high school in Cherry Hill, NJ and studied six years in a university in Finland. In total, I've lived in the United States for over eight years which is nearly a third of my life. The United States became my home when my parents and I came here when I was 3 years old. During my studies in Finland (1999-2006), I fell in love with and married a Finnish citizen. My plan was always to return to the United States after my studies because I was only temporarily in Finland and the United States was my home. On March 2006, I graduated with a Masters in Business Administration. At that time my wife and I were beginning to get ready for our move to the United States. We then learned of the current immigration law requiring me to sponsor my wife for a green card, but due to the huge backlog it would be over six years before my wife could join me in the United States. As we were still shocked by this law, I decided to return to the United States as I had originally intended. My wife was forced to stay back in Finland and our life then took a very uncomfortable turn.

We spend our days seven time zones apart; this makes even everyday communication difficult. When she is getting ready to go to bed, I am still at work. We try to talk to each other with a webcam every weekend, but our separation is usually the main topic of our conversations and it is becoming extremely frustrating for the both of us. I try to travel to Finland once every two to three months, but my short visits hardly make up for the lost time in

between. Because of our age, we are in the position that we need to begin seriously considering having kids soon, but this separation has made that thought impossible. I could not bear to watch my children grow up through a webcam. This has become a burden financially as well. The money that we had saved up for buying a house in the United States is now being used up by expensive international flights, paying rent and other costs in two separate countries and attempting to maintain our sanity in this forced separation. Our frustration is building and desperation growing. Our image of the United States as a compassionate and sensible country is being questioned. This current law goes against every possible concept of marriage. Our lives are shattered both physically and emotionally. I plead with Congress to help us be reunited and do the humane thing.

Satya LPR from NY

My name is Satyajit. I am from Buffalo, NY. I have Bachelor's Degree in Computer Engineering and have been working as a Computer Programmer/Analyst for last 11 years. I have been in the US for over 8 years now and have been paying my taxes every year. I got my US Permanent Residence (Green Card) through my US Employer, after working with them for 4 yrs.

I got married after getting my Green Card. Since my spouse is a Foreign national (Canadian citizen), she has to wait 5 - 6 yrs before she gets her green card to come and join me permanently in the US. Our dreams of starting a family, buying a house, the 'all American dream' is put on hold for 5 - 6 yrs due to ridiculous US immigration laws in place.

This back & forth traveling to my wife's home country has caused us of lot of financial instability and has put lot of emotional strain on our relationship. My wife's educational background and professional experience as a financial risk analyst will be an asset to this country.

The current US immigration system divides the families of US permanent residents, punishing us for taking the LEGAL route.

Legal permanent residents are going to be future US citizens, so why this injustice? There is NO national interest to be served by separating legal permanent residents from their spouses and kids.

2) Legal Immigrant Waiver Equity Amendment, and 3) Inadmissibility Waivers Based on Family and Community Equities.

The second and third reforms we are seeking deal with inadmissibility waivers: Pending proposals for legalization of unauthorized aliens extend generous waivers of immigration-related grounds of inadmissibility. However, beneficiaries of legal immigration petitions faced with the same grounds are not provided with comparable waivers. We propose extending to petition beneficiaries the same waiver provisions proposed for legalization and temporary worker beneficiaries. Further, current waiver provisions for the various grounds of inadmissibility vary widely in standards and applicability. Most create bright lines between eligibility and ineligibility which fail to account for the widely varying facts of each case. We propose an overall waiver section applicable to all grounds of inadmissibility that are not based on prospective conduct. The provision creates a balancing test of positive and negative factors to be applied in each case. Central to these factors are the strength of family and community ties compared to the seriousness of the misconduct involved.

Testimony follows from some of our members who are dealing with this issue under the current laws:

Testimony of Nancy Kuznetsov, U.S. Citizen, NC

I am a US citizen who served honorably in the US Military, with a daughter and son-in-law currently on active duty. My husband originally entered the US legally on a sports related visa. As a result of well meant but incompetent legal advice my husband is subject to the 10 year bar. I am the designated caregiver for my toddler grandchildren in the event my daughter and son-in-law deploy concurrently. A 10 year separation from my husband for filing incorrect visa applications is extreme and cruel punishment for a family who has given and is giving so much to their country.

Testimony of Brenda Frieidrich, U.S. Citizen, CA

I married Ismail in 1984. He received a green card we had a daughter in 1989. We later divorced but after a few years reconciled and remarried. The green card that my husband had already obtained was lost or stolen during his time outside the country so we had to apply again in 2002 and our

petition was approved. After waiting a year to get to an interview, the consular officer shelved our case saying that my 23-year relationship with the father of our then 12 year-old daughter was "a fraud." The government had no evidence to support the accusation and, in fact, ignored substantial evidence to the contrary. We were forced to start over from the beginning. We were denied again, this time due to an expunged, 15 year-old misdemeanor which we had previously declared where the penalty under the law was not more than a $100 fine. We filed a waiver which, after a year, was denied stating I did not suffer enough and again we were accused of having a fraud marriage. Our family has been separated over 5 years pursuing my husband's visa and we have spent tens of thousands of dollars attempting to appeal these accusations. Our daughter is now 17. We have appealed the denied waiver and our case is still pending. A life sentence for a misdemeanor is an excessively harsh penalty. Lack of oversight and accountability in the system has left our family in limbo for years. The amendments proposed by American Families United for waivers based on family and community equities would help us and other families in our situation.

Testimony of Maura Maciel, U.S. Citizen, NY

I am a US citizen who has been with my husband for over 7 years. He entered the country without inspection almost 11 years ago, seeking out a way to be the financial caretaker for his family after his father passed away. He has been a law-abiding citizen, has learned English, and has gained himself a strong reputation among his colleagues. My husband is currently subject to the 10 year bar due to current immigration law. Because of this, we have been unable to see our Mexican family members, we are too insecure to start a family, and have difficulty planning for our future. I am essentially being punished for falling in love with and marrying an immigrant. Without an equitable waiver provision in Comprehensive Immigration Reform, we will continue to live in fear that we may at any day be separated from one another.

Testimony of David Guard, U.S. Citizen, CA

I am a US Citizen born and raised in California. My wife and I met in 1999 and married in 2003 and were denied a visa in April of 2006 because my wife had been in the US for 3 years without any documentation. The separation and living outside of the US has meant missed the first steps our

oldest son took. It also meant my wife couldn't meet my Aunt who passed away from cancer. I ask for a better solution than having to choose between years of separation or leaving the US and trying to make it outside of the US.

Testimony of Keith Krueger, U.S. Citizen

I am a US citizen who has been married to my wife, Elizabeth, for six wonderful years. Elizabeth was deported last September 15th for a visa violation fourteen years ago while going through a divorce and trying to get custody of her child. Fourteen years she worked the legal system to get permanent residency and it came down to the CIS denying her case and then misplacing her papers as an appeal was being decided last year, so they couldn't make a decision. Now that she's gone, they found the papers, approved the appeal but closed her case because she is not here anymore. We refiled and they have again misplaced her papers.

Elizabeth has left behind three adult sons, two of who are citizens. One granddaughter she treated as her own child. Her oldest is a Navy veteran and currently a Chicago police officer. Elizabeth's youngest child is having mental problems and attempted suicide last year. The other is now homeless with no direction. Their mother was their source of direction. Now she is gone. I am hoping we have not lost these people because of immigration policies. Not to mention that Elizabeth's departure has destroyed this family. Destroyed my dreams for the future. I now have to support Elizabeth's child here in the US, support Elizabeth in the Philippines and maintain our home in the US on half our previous income. We need to have equitable waiver provisions in the immigration reforms so that those who have followed the law, like Elizabeth, and will be treated the same as those who have not and do not have any US citizen connection. We must be fair to all.

Testimony of Margot Bruemmer, U.S. Citizen

I am a US citizen who married my husband in 2003. My husband had entered the US illegally but after we were married he wanted to do the right thing and adjust his status. On the advice of a lawyer, he returned to his home country of Mexico and was penalized with a ten year bar. A ten year, unwaiverable bar is an extreme, harsh, and radical punishment for entering the country illegally. The punishment does not fit the crime. My family has

been ripped apart because of this cruel law and is suffering economic, emotional, and physical hardships as a result.

If Comprehensive Immigration Reform is passed, millions of other people who committed the exact same act as my husband will have a path to citizenship while he will remain barred for ten years. This is not fair. Comprehensive Immigration Reform must have an equitable waiver provision so that people such as my husband can have the same equal treatment as others who didn't try to do the right thing and who remained in the country.

Testimony of John Adams, U.S. Citizen

I am a U.S. Citizen. I served in the Michigan Army National Guard for 6 years and was discharged honorably. My wife, Lourdes, entered the country legally on a B2 visa in 1991 and overstayed. She was deported from the country after we decided to adjust status. My wife and I now face the 10 year bar under current law. Both of our children are U.S. citizens and are now residing with their mother, separated from their father. I cannot leave the country to go live with my family because I am the caregiver for my mother who is 78 yrs old and has Wernikes Aphasia which developed after she had a number of strokes. I have power of attorney over her health and finances.

My family is facing unusual hardship because of current law, and immigration reform should contain a waiver that allows spouses of U.S. citizens to remain together in the U.S.A.

Testimony of Thomas Carson, U.S. citizen, TX

I am an eight year U.S. Navy Veteran who graduated with honors from the difficult Naval Nuclear Power Training. My father, grandfather and great-grandfather were also US Veterans. I am being forced to live separated from my family because, before I met my wife, she was blackmailed into making a false claim to US Citizenship. This has earned her permanent inadmissibility based on current immigration law. I am a lead member of a large controls project at the Anheuser-Busch Brewery in Houston. I also have two loving sons from a previous relationship living near Houston who I faithfully support and spend time with. This makes it very difficult for me to decide to move to Mexico. My two sons living in Mexico with their mother

have been registered as US citizens born abroad and are not having the chance to grow up in a united family. Without a waiver provision in Comprehensive Immigration Reform this family will continue to suffer unnecessarily regardless of the circumstances of their violation and will not be on par with guest workers who also broke the law and have no US citizen connection.

Testimony of Andrea Shields Nuñez, U.S. citizen, VA

I am a United States citizen married to a man from Honduras. My husband entered the United States without inspection in hopes of making a better life for himself and his mother back home. After we were married, we wanted to follow the law and filed the appropriate paperwork with USCIS. Because of the length of time my husband has been in the U.S., he will be barred from re-entry for 10 years and I will have to file a petition for a waiver of inadmissibility proving that it would be an extreme hardship for me to move to Honduras to wait out the bar with my husband. I will, in essence, be exiled from my country in order to live with the man I vowed to spend the rest of my life with. It does not serve the national interest, either economically or socially, to force a U.S. citizen to live separately from her husband or to leave the country.

I strongly urge the Subcommittee to include family-friendly provisions in any CIR legislation that goes to the floor and provide equity for the spouses of U.S. citizens who are seeking waivers of inadmissibility.

Testimony of a US citizen in NC who wishes to remain anonymous due to her husband's legal status

My husband is from Honduras. He came after Hurricane Mitch in 1998, (imagine that Katrina hit the whole US not just New Orleans.) My husband paid someone to help him apply for TPS - Temporary Protective Status, which would have given him temporary permission to be here - SSN/work permit. They stole his money and he missed the cut off date to apply. We got married in 2005 and have 2 children. We are currently living "under the radar." If my family loses my husband we lose everything. We lose the house, the cars, the babysitters, and my job and would end up on welfare. Then we would be forced to move to the poorest country in Latin America. I love my country, but I love my husband and have the constitutional right to marry the man I love. Why would my country rather kick out 3 citizens

instead of creating one more? We want immigration reform that keeps us home and validates the sanctity of true love.

4) Background Check Review Process.

The fourth reform we are seeking addresses problems with back ground checks. There is no argument with detecting past misconduct or future threats among applicants. But most delays arise from bureaucratic factors unrelated to security. To provide accountability to the process without undermining security, we propose a mechanism to allow applicants to receive supervisory review on request whenever a background check has not been completed with a 180-day period.

Following is testimony from some of our members who are dealing with this issue under the current laws:

Testimony of Mohamad Khair Khasawneh, AZ

I live in Phoenix, Arizona with my wife of two years. We have been unable to see my family because my application for permanent residence has been delayed in a security check. On a professional level, I work on kidney cancer and I have several innovative ideas for drugs that will treat this resistant cancer. I already published some papers about several medications for kidney cancer. The last one helped in the FDA approval in 2005 for a drug called sunitinib. I have not been able to join the National Cancer Institute (NCI) to do research in depth about kidney cancer because I don't have permanent residency. Also I am not able to attend conferences outside the continental US because I am worried that I will be denied re-admission. I am offered a position in McGill University in Canada and I am considering this position seriously since I don't have security about my legal status in the US. I need a review process on security check delays to bring some accountability into the system so that my wife and I, who have followed the letter and the spirit of the law, can live a normal life as family.

Testimony of Hoang Nguyen

I obtained a science PhD in the US and have always retained a legal status. The name check process for my I-485 case has been pending for exactly one year. Name check delay has put a tremendous hardship on me since I have not seen my family back in Vietnam for over 10 years. The only son in the

family, I would have to take care of my aging mother, who stays lonely back in our homeland. Her wish would be to live with me then die happily. My dream to bring her to the US upon me becoming a naturalized citizen in a distant future will be just a dream.

Above all, not having the green card due to name check delay is vastly undermining my full potential to contribute to the financial industry. My cutting-edge discoveries have been confined as proprietary properties of the sponsoring firm while they would - if I had the freedom of self-employment - have major impacts in a business that brings prosperity to the United Stated of America.

I believe that the out-of-normal delay of my name check process is due to my last name being very common among the Vietnamese community, making my name an easy hit target in the computerized name check. If I am being held back since someone sharing my name committed a crime, I am then being unfairly penalized for bearing this name, a part of my proud heritage. (My work colleagues had their I-485 approved within a couple of months.)

I suggest that, if someone's name check has been pending for 6 months, the USCIS should adjudicate his/her case on the contingency basis so that he/she can enjoy the benefit of a permanent resident. I also call to bring accountability to the name check system. That would help my family live a health life and my talent to contribute to the fullest to this great country.

Testimony of Om Soni, MI

I have been stuck with FBI name check for more than two years. I have leukemia and my employer has killed all my vacations. I cannot take a day off from work without losing my salary but I am stuck working for the company because they sponsor my green card. Once I have my green card, I can change my job and work for any employer with better benefits.

Life is tough with all the visits I have to make to doctor's office with a not so good medical insurance and not a single day of paid vacation. I have a 3 year old son. I wish I could spend a little more time with him. But instead I am stuck at work with worsening health so that I do not lose my job and medical insurance. That means life and death for me.

Testimony of Mohammad S Osman MD,FAAP, U.S. Permanent Resident, GA

I came to the US in September 2001 on an H1b Visa sponsored by my employer and my I-140 was approved in November 2002. I applied for Change of Status I-485 which has since been pending. I have applied repeatedly for Travel Documents which have not been given and no reason given for the same .Every time I call the USCIS or visit the local office the answer is always the same standard inhuman one: "We are waiting for FBI security clearance." I have not been able to travel back to my home country for the last 3 years (after my H1b expired on the passport, as I was able to travel earlier on that).

My mom is 80 years old and would like to see my new baby who was born in 2004 as well as the rest of the family. A change of status would allow me to travel and be with my family if something were to happen to my mom (God forbid). In addition my daughters are US citizens but because of my status I cannot invest in the state college funds for them.

Testimony of Michael Sapozhnikov, NY

I have been in the process of Employment Based green card since August 13, 2001.

I work as a Software Engineer in New York. From month to month, I keep getting the same response from USCIS officials. They tell me, "Your name check is pending and nobody knows when it will be completed."

I live in Rochester, NY with my wife and two children. My wife (Alla Sapozhnikova) has a Bachelors Degree in teaching English from Moscow State Pedagogical University. We know that NY State is in need of these kinds of employees, but Alla cannot even try to look for openings without a green card. My 18-year-old son, Boris Sapozhnikov, is graduating from Monroe Community College this spring with an associate's degree in Communication and Media Arts. He has been included in the Dean's list three times. After applying to SUNY Fredonia as a transfer student, he was denied Federal Student Aid and was deemed a non-eligible non-citizen.

Our name check expedition could solve all these problems very quickly, and I would greatly appreciate your help in making that happen.

We have legally resided in the United States since August 1996 when I immigrated with an H-1B visa, and my family members came with H-4 visas.

Testimony of Wei Wang, CA

I am not eligible for the great employment opportunities in the United States due to the name check for my I-485 case. Also, the international travel becomes really inconvenienced due to the delay. I think I have exhausted all the administrative approaches to get access to the authorities. The USCIS has been notoriously been giving me hopeless answers such as "pending" with no indication of where the case is.

I was told the cases are in process by FIFO "First In First Out" approach. However, I witnessed some family and friends who applied the I-485 adjustment early this year (2007) and received a green card within a couple of months even without an interview. I was shocked by FBI/USCIS's current efficiency in screening applicants and started to deeply believe that our cases (me and all people in the same situation) are buried somewhere with no attention from the immigration or federal officers. I have filed a suit against the USCIS and FBI in January this year.

Testimony of Yesudason Paulrajnadar, NJ

I have applied for the I-485 green card through employment for me and my wife. My name check has been stuck for more than 2 years due to that we are facing numerous problems in jobs and our personal and financial life and decisions. It has been lately very physically and emotionally affecting our family lives as we don't know what situation we are going through as there are no definite answers for this name check process. We are not able to make any decisions due these delays in our lives.

I don't even have any driving violations and have no clue about why the name check is taking so long time. I would really appreciate if anyone can help us out of this.

Testimony of Wei Huang, TX

I am a scientist, working in the Woodlands, Texas. I was approved by USCIS as an Alien with Exceptional Abilities with the National Interest Waiver (I-140, EB2 category) in March 2005.

However, my immigration petition (I-485, filed on June 23, 2004) is still pending, while Texas Service Center current processing date is Sept. 13 2006. So my case is 27 months past due. I tried to contact USCIS several times. They told me that they were awaiting the result of required FBI security check on my petition case even through the visa number (EB2, China) is available. They won't be able to make a decision without the result of security check.

I filed my immigration petition (I-485) on June 23, 2004. The name check request was sent to FBI on July 14, 2004 by USCIS. However, even after more than 900 days FBI receiving the name check request, and with FOIPA evidence showing no record on me, FBI still didn't complete my name check. FBI's action on my case is absolutely unreasonable.

My wife and I have worked hard and pay taxes to the United States each year. We really want to make the US our home. However the current status of my green card application prevents us from taking any positive steps to really make the US our home and everything in our life, such as education, career and family reunions have been badly affected by this pending case for many years.

Testimony of Saad Altai

I am a citizen of Iraq and have been in the Unites States for 11 years in all with my wife and 3 kids (one of them is a US citizen), paying taxes since I came here on an H1B visa in 1996. I passed USCIS I-485 adjustment of status interview to be a permanent resident in 2004 and have been waiting on name check for 3 years 5 months today (since December 2003). I have a clean record with no convictions and just two speeding tickets.

I cannot apply for federal loan to study for an MSc. degree (I'm BSEE). I cannot travel freely to check on my parents living in Baghdad under horrifying conditions, nor can my wife. I cannot be accepted to join the US troops in Iraq as an interpreter because they need a work authorization valid

for 1 year (from start of deployment) while USCIS EAD can only be renewed 90 days from expiry and only for 1 year. My family and I live in an environment of instability not knowing the outcome, all kinds of "what if" questions arise daily.

Relief is needed so my family can plan for life without being mired in unknown circumstances, so that I can get a better degree and improve our quality of life or make a difference in the war.

Testimony of Yulia Bordeaux, TX

I am a citizen of Russia. I have not been able to re-enter the US and have been separated from my US citizen husband of 3 years, Matthew Bordeaux, for over 15 months due to the incomplete FBI name check, initiated for me 11 + months ago for my I-130 (I had to return to Russia to serve the remainder of my J-1 term from when I first came to the US in 1994).

This forced separation has been an immense emotional and financial burden for us. My husband is working around the clock, including weekends, to be able to provide for two households on two different continents. We cannot afford for him to travel and see me, because whatever we budgeted for my stay here has long run out. (Russian salaries can barely provide for a tiny fraction of one month's rent).

In addition, the completion of my PhD program in French Linguistics at the University of Texas is now being seriously jeopardized -- I have already used up 2 years of academic leave of absence while waiting in Russia and will be forced to officially abandon my studies and give up my degree in which I had invested 5 years, if I am not able to return by August of this year.

So far, all our efforts to appeal for help have been completely futile. My FOIPA has come back with the result of no record, and my criminal/legal/immigration background is spotless. We fear that I have been blackholed. We desperately need someone to look into my name check.

Testimony of Keshun Yu, KY

I live in Lexington, Kentucky. My wife and I were married in 1999. Because our applications for permanent residence (EB-1b) have been delayed in my

security check for the past two and a half years, we have to work without health insurance benefits, vacation, sick leave, retirement or any other benefit. We were unable to buy a home and dare not to have any children. I am 40 years old and my wife is 34 so we may never have any children due to the FBI name check delay. We are depressed and anxiously waiting for the seemingly endless FBI name check to be completed. No career advancement is available me despite many colleagues who have advanced. The emotional and financial tolls are too much for us.

Testimony of Vikas Sudesh, FL

My name check has been pending since May, 2004. **I** can't apply for research grants from the federal government. I can't apply for several positions funded by the federal government. Every year my wife and I need to apply for AP, EAD, and driver's license; this costs money and causes us inconvenience. We can't apply for homestead exemption. We are always worried that we might do some lapse and go out of status.

Testimony of Xudong Yang, TX

I am a software engineer. I studied and obtained my bachelor's and master's degree in the United States. My wife is a US citizen. We married in March 2003; I was on H1b visa at that time. I applied adjustment of status to PR in November 2004 and have been stuck in Name Check at FBI ever since.

I have been unable to work freely as I am required to apply Employment Authorization Document every year in order to work legally in the United States. I am also prevented from applying for jobs that require PR status or citizenship. I am also prevented from traveling freely. I must apply for travel document before traveling to outside of United States or I will not be permitted to reenter.

The lack of accountability of the Name Check process has left me in limbo. I see no relief any time soon. I have exhausted all administrative remedies. I have tried writing to our Senator. My lawyer has attempted to contact the FBI numerous times, all to no avail. As a last resort, I filed a lawsuit against USCIS and FBI in March in the hope of bringing accountability into this matter.

5) <u>Fiancé Child Status Protection.</u>

The final reform we are seeking is Fiancé Child Status Protection. With the passage of the Child Status Protection Act in 2002, Congress established the principle that children of beneficiaries of citizen petitions should not age out (i.e., lose their "child" status by turning 21) once the petition has been filed. Because of the unique mixture of nonimmigrant and immigrant procedure applied to fiancés of U.S. citizens, this age-out protections does not extend to children of such fiancés. We propose to correct this oversight and provide a mechanism for those denied benefits due to aging out in the past to reclaim those benefits within two years of enactment.

Following is testimony from some of our members who are dealing with this issue under the current laws:

Testimony of Glenys Old, U.S. citizen, WV

I came to the United States from England with my two children when I met Curtis Old, a US citizen, fell in love and we decided that we wanted to spend the rest of our lives together. My children and I entered on "K" visas, me on a K-1, Sarah and Michael on K-2's. My daughter and I had no problems with Adjustment of Status and became citizens of the United States of America in July of 2006.

Unfortunately, the USCIS in Washington D.C. have denied Michael's application to become a Legal Permanent Resident, based on the fact that he turned 21 during the processing of his application. Although Michael was under 21 when my husband and I were married, when he applied and received his K-2 visa, when he entered the USA and when he filed for AOS. He has been placed in Removal Proceedings simply because he turned 21 after he had completed all that was required of him, but the USCIS did not complete their part before his 21st birthday.

Our family is now faced with two choices: 1) Michael returning to the UK where he now has nothing – no home, no family, no means of supporting himself and the other three family members remaining in the USA; or 2) The entire family leaving the USA, where three of us are citizens, in order to remain together as a family unit.

Our family hopes that any Immigration Reform Bill will seek to include K-2 visa holders in the CSPA to save other families the heartache of being torn apart by a simple Congressional oversight.

Testimony of John Monro, U.S. citizen, IL

My wife, Natalia, and her daughter Veronika arrived in the U.S. from Russia as K-1 (fiancée visa) and K-2 visa beneficiaries respectively. Natalia and I met in Russia and after lengthy dating decided to get engaged. We were married within 90 days after her arrival in the US. Subsequently, adjustment of status to lawful permanent resident was approved for Natali, but, sadly, denied for Veronika. Although Veronika had received the K-2 visa before her reaching 21, had entered the US before reaching 21, the marriage of her mother had taken place before her reaching 21, and she had filed for AOS before reaching 21, she was denied simply because the USCIS did not complete their processing of the AOS application before her 21st birthday. Congress passed the Child Status Protection Act in 2002 which prevented "aging-out", by locking in the age at the time when the application for AOS is submitted. But this act benefited only children of the immigrant visa holders' categories at the exclusion of the non-immigrant K-2 visa holders. Because of employment, and having a special needs son, I would not be able to consider departing the country together with the rest of the family. On the other hand, if Veronika returns to Russia while the others remain, she will be without a family, a home, and any means of self support. Clearly, the only answer is for the family to stay together. It is our sincere hope that in result of the congressional review of current immigration policies a decision would be made to include a provision amending the applicable sections of the immigration law, so that the K-2 beneficiaries might enjoy the same protection from aging-out that other immigrant visa holders had already received pursuant to the CSPA.

Testimony of Randy Walser, U.S. citizen, TX

My wife, Jiaying, came to the US from Yulin, Guangxi in the People's Republic of China to marry me. Her son, Jingyu, lived with his father and decided to remain behind for a year. Jiaying entered the US on Dec. 2, 2005. Jingyu was awarded a follow-to-join visa, and entered the US on Nov. 30, 2006. They entered on "K" visas, Jiaying on a K-1, Jingyu on a K-2. Jiaying interviewed for her Adjustment of Status in May, 2006 and is awaiting an FBI background for her green card.

Unfortunately, the USCIS, has denied Jingyu's application to become a Legal Permanent Resident, based on the fact that he turned 21 during the processing of his application. He was under 21 when Jiaying and I were married, when he applied and received his K-2 visa, when he entered the USA , when he filed for AOS, and when he received is I-797C receipt. His application was denied simply because he turned 21 after he had completed all that was required of him, but the USCIS did not complete their part before his 21st birthday. The USCIS has also revoked his Employment Authorization, and the only option open is to require him to return to China.

This family hopes that Congress will make its intentions clear with regards to K-2 adjustment of status and that any Immigration Reform Bill will seek to include K-2 visa holders in the CSPA to save other families the heartache of being torn apart by a simple Congressional oversight.

Testimony of Ronald Monks, U.S. citizen, CA

Our story began in 2002 when I met Iryna while traveling in her home city of Dnepropetrovsk, Ukarine. In December 2003, Iryna accepted my proposal to marry and live together in the USA. In April 2004, Iryna and her son, Dmytro, then 19 years old, were issued K-1/K-2 visas and on April 25th, the three of us arrived together in the Phoenix, Arizona. Iryna and I were married on June 5, 2004. According to USCIS timelines as posted on the agency's website, the processing time for applications to adjust status at the Phoenix District office was more than 2 years. Seeing the long processing delay and anticipating relocation to California, we decided to defer until we moved to the San Francisco Bay Area where processing times were considerably shorter.

In May of 2005, we moved to California and filed applications to adjust status for Iryna and Dmytro in September. Concerned about Dmytro aging out during processing, we attached a sheet of paper requesting expedited processing if there was such a potential problem. We were told by an Immigration Officer manning in San Francisco that as long as the application was received before our son's 21st birthday, he would not be aged out.

On October 14, 2005, Dmytro turned 21 and in April 2006 we were interviewed for adjustment. At the end of the interview the adjudicating

officer, Cathy Ling, informed us that she could not adjust Dmytro since he was now 21 years old. I contacted William Ramos, the chief of adjudications in San Francisco and he advised us to submit a motion to reconsider. We did, in fact, file a Motion to Reconsider along with the required filing fee of $385. Miss Ling answered our plea for reconsideration with insults and derision, blaming us for our circumstances.

Miss Ling's letter of denial instructs Dmytro to leave the United States immediately. He cannot leave his family and return to Ukraine, nor should he be expected to. His mother has received her green card and is now a permanent legal resident. Our son, however has no status. He cannot legally work, drive a car or progress in his life until this egregious error is remedied.

Court decisions such as Akhtar v. Burzynski have consistently instructed the USCIS to resolve ambiguities in favor of the immigrant and to make decisions that are consistent with the long-standing intent of Congress to keep families together. Yet, USCIS repeatedly abuses what it sees as its discretion and thwarts the intent of Congress preferring to throw the lives of law-abiding families of American citizens into turmoil, anguish and uncertainty.

Testimony of John Wilton, U.S. citizen, TX

My wife Josielyn came to the United States with her two daughters, Myra Belle and Pamela Joy, last November 8, 2006, when we decided to get married and spend their lives together. They entered the United States as K visa holders. Josielyn was K1, Myra Belle and Pamela Joy were K2s.

We requested that the USCIS, NVC and the U.S. Embassy in Manila expedite the visa interview at the U.S. Embassy in Manila, Philippines because Myra Belle would be aging out in January 06, 2007. On top of that, Josielyn and her children have a Permanent Protection. Their visa interview/approval was last October 18, 2006. They arrived in the U. S. November 8, 2006 and Josielyn and I were married on November 14, 2006. We were relieved because they were all able to apply for adjustment of status before Myra Belle turned 21. They were all interviewed before Myra Belle turned 21 and they all had their biometrics done before Myra Belle turned 21. But only Josielyn and Pamela Joy got emails from USCIS informing them that they were registered as new permanent residents. Myra Belle received a denial letter last January 30, 2007.

At the time of filing of the application, Myra Belle had not yet turned 21, thus there was a visa immediately available and it was improper to have denied it. The application was on time. The interview was on time. The biometrics were on time. Our family has done our part. USCIS did not complete their part before Myra had her 21st birthday despite the family's urgent and repeated requests for expedition.

At this point, filing the I-130 petition is the only option for Myra Belle. But our family is hoping that any Immigration Reform Bill will address the gaps and issues that K-2 visa holders have encountered, thus preventing frustrations, disappointments and extreme emotional stress and burden for the family.

Conclusion

Once again, we thank the Chairwoman and the members of the Subcommittee for the opportunity to present testimony urging that family unity remain a central American value in immigration reform. We urge you to add these provisions to any comprehensive immigration reform legislation.

American Families United
http://www.AmericanFamiliesUnited.org
Bruce A. Morrison
Morrison Public Affairs Group
b.a.m@att.net
301-263-1142

UniteFamilies
http://www.unitefamilies.org
Paul Donnelly
pauldonnelly@medialever.com
301-559-1775
cell: 301-537-3573

Legislative Language

Immediate Relative Status for Lawful Immediate Relative Status for Lawful Permanent Resident Nuclear Families

SEC. 1. IMMEDIATE RELATIVES. Section 201(b)(2)(A)(i) of the Immigration and Nationality Act (8 U.S.C. 1151(b)(2)(A)(i)) is amended—

(1) In the first sentence, by inserting "or the spouses and children of aliens lawfully admitted for permanent residence," after "United States,";

(2) In the second sentence—

(A) By inserting "or lawful permanent resident" after "citizen" each place that term appears; and

(B) By inserting "or lawful permanent resident's" after "citizen's" each place that term appears;

(3) In the third sentence, by inserting "or the lawful permanent resident loses lawful permanent resident status' after `United States citizenship"; and

(4) By adding at the end the following: "A spouse or child, as defined in subparagraph (A), (B), (C), (D), or (E) of section 101(b)(1), shall be entitled to the same status, and the same order of consideration provided in the respective subsection, if accompanying or following to join the spouse or parent."

Legal Immigrant Waiver Equity Amendment

SEC. 2. Sec. 212 of the Immigration and Nationality Act (8 U.S.C. 1182) is amended by adding the following new subsection—

"(u) APPLICABILITY OF GROUNDS OF IINADMISSIBILITY—The following limitations on the grounds of inadmissibility shall apply to an alien who is a beneficiary of a petition filed under section 204(or the spouse of child of such beneficiary) for conduct that occurred before the effective date of this Act—

"(1) GROUNDS OF INADMISSIBILITY NOT APPLICABLE—The provisions of paragraphs (5), (6)(A), (6)(B), (6)(C), (6)(F), (6)(G), (7), (9), and (10)(B) of this section shall not apply.

"(2) WAIVER OF OTHER GROUNDS—

"(A) IN GENERAL—The Secretary of Homeland Security may waive any other provision of section 212(a) in the case of such an alien for humanitarian purposes, to ensure family unity, or when it is otherwise in the public interest, except that the Secretary shall not waive the following provisions of Section 212(a) on the basis of this provision:

"(A) Paragraph (1) (relating to health).
"(B) Paragraph (2) (relating to criminals).
"(C) Paragraph (3) (relating to security and related grounds).
"(D) Subparagraphs (A) and (C) of paragraph (10) (relating to polygamists and child abductors).

"(B) CONSTRUCTION—Nothing in this paragraph shall be construed as affecting the authority of the Secretary of Homeland Security, other than under this subparagraph, to waive the provisions of section 212(a).

"(3) SPECIAL RULE FOR DETERMINATION OF PUBLIC CHARGE—Such an alien is not inadmissible by reason of Section 212(a)(4) if the alien establishes a history of employment in the United States evidencing self-support without public cash assistance.

"(4) SPECIAL RULE FOR INDIVIDUALS WHERE THERE IS NO COMMERCIAL PURPOSE—Such an alien is not inadmissible by reason of a Section 212(a)(6)(E) if the alien establishes that the action referred to in that section was taken for humanitarian purposes, to ensure family unity, or was otherwise in the public interest.

"(5) APPLICABILITY OF OTHER PROVISIONS—Section 241(a)(5) and section 240B(d) shall not apply with respect to such an alien.

<u>Inadmissibility Waivers Based on Family and Community Equities</u>

SEC. 3. WAIVERS OF INADMISSIBITY. Section 212 of the Immigration and Nationality Act (8 U.S.C. 1182) is amended by inserting the following subsection (c)—

"(c)(1) Notwithstanding any other provision of law, the Secretary of Homeland Security or the Attorney General may waive any one or more grounds of inadmissibility set forth in subsections (a)(2), (a)(3)(except subparagraphs (A) and (B)(i)(II)), (a)(4), (a)(6), (a)(7), (a)(8), (a)(9), and (a)(10)(except subparagraph (A)) to permit an alien to receive an immigrant visa or be adjusted to the status of lawful permanent resident unless it is found that the balance of favorable and unfavorable factors on the totality of the evidence weighs against granting the waiver.

"(2) Favorable factors shall include:

"(i) The amount of time that has passed since the events or conduct that is the basis of the inadmissibility;
"(ii) The extent of rehabilitation and remorse demonstrated by the alien since such events or conduct;
"(iii) The duration of legal residence in the United States;
"(iv) The presence of family members living legally in the United States;
"(v) The provision of economic and social support to family members living in the United States;
"(vi) Property owned by the alien in the United States for personal or business use;
"(vii) Social, economic or cultural contributions made by the alien to his community in the United States or abroad;
"(viii) Honorable service in the armed forces of the United States or of an ally of the United States;
"(ix) The extent of any hardship that would be suffered by the alien or any person living legally in the United States due to the alien's inadmissibility; and
"(x) Any specific benefit that would accrue to the government or citizens of the United States by permitting the alien to become a lawful permanent resident.

"(3) Unfavorable factors shall include:

"(i) The seriousness of the conduct that is the basis of the inadmissibility;

"(ii) Commission of crimes or significant immigration violations in addition to the conduct that is the basis of the inadmissibility;
"(iii) Specific harm caused to the national interest of the United States by conduct of the alien;
"(iv) Any specific detriment that would accrue to the government or citizens of the United States by permitting the alien to become a lawful permanent resident.

"(4) The absence of one or more favorable factors shall not be construed as a negative factor and a single favorable factor can provide sufficient basis to grant a waiver.

"(5) Permitting spouses and minor children to live together in the United States if one of the spouses is a citizen or lawful permanent resident is a specific benefit to the government and citizens of the United States and should have additional weight in favor of granting waivers."

Background Check Review Process

SEC. 4. PROCESSING OF BACKGROUND AND SECURITY CHECKS BY U.S. CITIZENSHIP AND IMMIGRATION SERVICES—At the end of the Immigration Services and Infrastructure Improvements Act, Pub. L. 106-313, Title II (114 Stat. 1262, October 17, 2000), add the following—

"Sec. 205. Processing of Background and Security Checks.

"(a) With respect to the processing of background and security checks and fraud investigations conducted pursuant to any provision of law related to immigration benefits, the Secretary shall establish a procedure for supervisory review of delays in the concluding of such checks and investigations which shall:

> "(1) Be available if the duration of the check or investigation has continued for longer than 180 days;
>
> "(2) Be conducted if requested by a petitioner or applicant for any such immigration benefits;

"(3) Be conducted by supervisory personnel designated by the Secretary;

"(4) Determine the cause of the failure or inability to complete the check or investigation within 30 days of the request and project the likely time required to achieve completion;

"(5) Provide to the requesting petitioner or applicant the cause of the failure or inability to complete the check or investigation and the projected date of completion within 45 days of the request; and

"(6) Permit the petitioner or applicant to obtain a further supervisory review if the check or investigation remains pending after the projected date of completion."

"(b) The Secretary shall publish a report within 90 days of the end of each fiscal year which shall itemize by type of immigration benefit sought:

"(1) The number of background and security checks and the number of fraud investigations (separately stated) that have been pending as of the end of such fiscal year for periods of 90 days, 180 days, 270 days, one year, two years, and more than two years; and

"(2) The numbers of supervisory reviews requested for each such type of immigration benefit and a statistical summary of the proportion of such checks and investigations completed within 30, 60, 90, and longer numbers of days after the request for supervisory review was filed."

Fiancé Child Status Protection

SEC. 5. (a) Section 214(d)(1) of the Immigration and Nationality Act (8 U.S.C. 1184(d)(1)) is amended by adding at the end—

"Provided that the marriage does occur within three months of entry, and subject to the provisions of subsection (d) of section 245, the Secretary of Homeland Security shall adjust the status of said alien, and any minor children accompanying or following to join said alien, to the status of conditional permanent resident."

(b) Section 245(d) of the Immigration and Nationality Act (8 U.S.C. 1155(d)) is amended by adding at the end—

"The age of any child for the purposes of adjustment after entry in nonimmigrant status under section 101(a)(15)(K) shall be determined as of the date of filing of the approved K petition that provided the basis for said status."

(c) Section 101(a)(15)(K)(iii) of the Immigration and Nationality Act (8 U.S.C. 1101(a)(15)(K)(iii)) is amended by adding after "the alien" the following—

", provided that the age of such minor child shall be determined as of the date of filing of the approved K petition to classify such alien as defined in this paragraph."

(d) The provisions of this section shall be effective as if enacted as part of the Immigration Marriage Fraud Amendments of 1986, Pub. L. 99-639, and shall apply to all pending petitions or applications covered by its terms as well as to any petitions or applications that have been denied for which application of its terms would have changed the result, in which cases motions to reopen or reconsider shall be granted upon motion filed within two years of the enactment of this Act.

-30-

PREPARED STATEMENT ON INTERFAITH FAMILY IMMIGRATION BY AMERICAN FRIENDS SERVICE COMMITTEE, *ET AL.*

Interfaith Family Immigration Brief
May 2007

Within the Interfaith tradition, families are considered the stabilizing factor in society through which individuals are able to grow and experience the love of God. Thus, when family members are separated for long periods of time, there is a concern for the stability of our country and the growth of a healthy society.

Traditionally, immigration laws have upheld the value of family and placed priority on keeping families united. In our country today, however, there are hundreds of immigrant families that have been separated for an average of 6-8 years. Many of these families have been separated due to two types of backlogs- an administrative backlog as U.S. Citizenship and Immigration Services do not have enough resources to handle the workload, and also a visa backlog due to the limited number of visas that allow immigrants to enter into our country. Due to these backlogs, immigrants often have had to face the hard choice of being separated from family members for long periods of time, or entering illegally to be with their loved ones.

While we do not condone breaking of the law, we must recognize when the law does not reflect principles that create healthy societies, like the unity of the family. Allowing immigrant families to be reunited with their loved ones allows those who work in our country to be more productive members of our society while also contributing to the overall stability of our communities.

Currently, the annual ceiling for family-based immigration is 480,000 individuals per year. This number is divided into immediate relatives of U.S. citizens as well as 4 different family preferences based on different criteria. There is also a cap on how many people are allowed into the United States from any one country. A combination of these visa ceilings as well as the per-country cap often contributes to long waits for the average immigrant family. For example, a wife, husband, or child of a U.S. Lawful Permanent Resident is only now receiving a visa after a 5 year wait.

As Congress considers Comprehensive Immigration Reform, we seek to reform our immigration system according to the following guidelines so that families will be reunited as quickly as possible which will lead to a strengthening of our communities and the overall good of our society.

-The issue of family unity must continue to be a priority in Comprehensive Immigration Reform- Within the immigration reform debate, we must continue to seek to place family unity as a top priority in reforming our current immigration laws. While it is crucial to discuss border security measures as well as other important elements of comprehensive immigration reform, we must also seek to make sure that family reunification is closely examined and discussed.

- **The Immigrant Quota System needs to be updated-** There are thousands of families that have been waiting on average 6-8 years to be reunited with family members. We must revise the quotas for the various preference categories as well as re-examine the caps on per-country immigration so that families can be reunited as expeditiously as possible.

-More Administrative Resources must be given to reduce the backlog- The current system is operating on a fee-based system whereby the cost to apply is used towards not just the actual processing of the application but other unrelated Administrative activity. We must ensure that the Administration uses the full application fee towards the actual processing of the application and also ensure that the Administration receives enough resources to implement various measures, like hiring more staff, to reduce the backlog.

-Previously passed laws that create barriers to family reunification must be reformed- There are several provisions in current law that prevent family members from being reunited as quickly as possible. For example, the current law prohibits those who have been in the U.S. for a minimum of six months without permission from re-entering the country, even though they were qualified for immigration status. This has caused the long separation of families. We must seek to change those barriers to entry so that legal immigrants can enter the country and leave to see and be with family.

-Citizenship birth-right must be maintained- The 14th amendment of the Constitution is a cornerstone of our democracy. We must continue to preserve this Constitutional right so that children who are born here can become fully integrated members of our society.

As an Interfaith Community concerned with immigration reform, we support the rule of law and adherence to law and order. However, we must also seek to change the law if and when the law does not create a healthy existence. Current immigration law has caused one of the foundational units of our society, the family, to be disrupted, and we call upon Congress and the Administration to place family reunification as a top consideration in any immigration reform bill.

The strengthening of the United States can only be created when families are united. With a comprehensive approach to immigration reform, we can create a society that is stable, strong, and healthy.

Organizations:

American Friends Service Committee
Bilingual Christian Fellowship
Christian Reformed Church in North America
Church World Service
Episcopal Migration Ministries
Friends Committee on National Legislation
General Commission on Religion and Race, The United Methodist Church
Hebrew Immigrant Aid Society
Jewish Council for Public Affairs
Jubilee Campaign USA, Inc
Latino Leadership Circle
LUCHA Ministries Inc.
Lutheran Immigration and Refugee Service
Mennonite Central Committee, Washington Office
National Advocacy Center of the Sisters of the Good Shepherd
National Hispanic Christian Leadership Conference
NETWORK, A National Catholic Social Justice Lobby
Sisters of Mercy of the Americas
United Methodist Church, General Board of Church and Society
World Evangelical Alliance
World Relief

Individuals:
Don Bray, General Director, Global Partners
Laird R. O. Edman, Ph.D., Associate Professor of Psychology, Northwestern College
Jerry L. Ferguson, District Superintendent, Los Angeles District Church of the Nazarene
William J. Hamel, President, Evangelical Free Church of America
Pastor R D Hudgens, Reba Place Church, Evanston, IL
Dr. Joel C. Hunter, Senior Pastor, Northland – A Church Distributed
Andy Johnson, Professor of NT, Nazarene Theological Seminary
Rev. Jason Poling, New Hope Community Church, Baltimore, MD
Fidel "Butch" Montoya, Coordinator - H. S. Power & Light
Diane S. Murphy, PhD, Professor, Northwestern College
Dr. Angel L. Nunez, Senior Pastor, First Bilingual Christian Church of Baltimore
Donna Schaper, Senior Minister, Judson Memorial Church
Michael L. Yoder, Professor of Sociology, Northwestern College

PREPARED STATEMENT OF LESLYE ORLOFF, DIRECTOR AND ASSOCIATE VICE PRESIDENT OF THE IMMIGRANT WOMEN PROGRAM AT LEGAL MOMENTUM, ALSO REPRESENTING THE NATIONAL NETWORK TO END VIOLENCE AGAINST IMMIGRANT WOMEN

Testimony of Leslye Orloff, Director and Associate Vice President of the Immigrant Women Program at Legal Momentum, also representing the National Network to End Violence Against Immigrant Women

U.S. House Judiciary Committee, Subcommittee on Immigration, Citizenship, Refugees, Border Security and International Law
May 8th, 2007

Family Based Immigration and Violeuce Against Women

I. Introduction

The Immigrant Women Program at Legal Momentum is one of the Co-chairs of the National Network to End Violence Against Immigrant Women. Established in 1970, Legal Momentum is the country's longest standing organization dedicated to advancing the legal rights of women and girls. Legal Momentum has long been an advocate of women's right to live free from violence. As the chair of the National Task Force to End Sexual and Domestic Violence, Legal Momentum was a leader of the original push to pass the Violence Against Women Act ("VAWA") in 1994 as well as VAWA 2000 and VAWA 2005. The Immigrant Women Program at Legal Momentum is dedicated to assuring that laws, policies and practices both nationally and locally offer meaningful help for immigrant victims of domestic violence, sexual assault child abuse and trafficking. Legal Momentum represents the National Network with Congress; in that role IWP led the effort to craft and secure passage of the protections for immigrant victims of violence against women included in VAWA 1994, VAWA 2000, VAWA 2005, the Trafficking Victim's Protection Act of 2000, the Illegal Immigration Reform and Immigrant Responsibility Act (IIRAIRA), and the Personal Responsibility and Work Opportunity Act (PRWORA) of 1996.

The **National Network to End Violence Against Immigrant Women (NNEVAIW)** membership consists of 3,000 organizations working with immigrant victims of violence against women. The NNEVAIW seeks to challenge and eliminate all forms of oppression ai discrimination against immigrant women who face violence by empowering them to build better lives of their choice. The NNEVAIW is a coalition of survivors, immigrant women, advocates, activists, attorneys, educators and other professionals committed to ending violei against immigrant women by:

- Working with diverse immigrant communities to prevent violence against women.
- Building capacity for immigrant women to become leaders against all forms of violence
- Promoting an understanding of the complex realities of immigrant women facing violen

- Providing technical and training support to service providers, attorneys, community advocates, and other professionals (both governmental and non-governmental) working with immigrant women at the local, state, federal, and international levels.
- Increasing public awareness, education, and understanding of issues around violence against women, and in particular, immigrant women.
- Promoting law and public policy reforms at the local, state, and national levels that bene immigrant women facing violence
- Sharing best practices throughout the network locally, nationally, and globally.

II. CIR Principles

Legal Momentum and the National Network to End Violence Against Immigrant Women strongly support comprehensive immigration reform. We believe it must adhere to the following principles:

- Comprehensive Immigration Reform (CIR) must cover undocumented immigrant men, women, and children;
- Immigration reform must provide a path to U.S. citizenship;
- Immigration reform must create legal channels for workers to fill future U.S. jobs;
- Immigration reform must protect all workers; and
- Immigration reform must reduce family immigration backlogs.

III. Family Immigration

The recent White House Proposal on comprehensive immigration reform proposes scaling back the family based immigration system. Historically the lack of access to capital and social constraints, both in their home countries and in the United States, results in immigrant women disproportionately immigrating through family based immigration. Men, more than women, have access to resources and education. They also more often control family decision making about which spouse will apply for work related visas to the United States. When immigrant women join their spouses or family members they gain legal immigration status as derivative beneficiaries of employment visas. Once in the United States, since many immigrant families need two or more incomes to support themselves and their children. Immigrant women are often forced by economic concerns or controlling family members to work off the books in the underground economy without legal work authorization.

Immigrant women care for our children, our homes, and our workplaces. They fill support positions that enable American women to join and remain active in the workforce. They support their own families, allowing others to seek employment outside the home to support the family. In doing so, immigrant women not only fill vital interpersonal service positions, but they also make it possible for our economy to continue growing with highly skilled men and women who are able to remain in the workplace knowing their homes are competently cared for.

Tearing down the family immigration system will tear apart families; it will also tear through what little economic and legal security immigrant women are able to achieve. The White House Proposal's destruction of family immigration will leave immigrant women vulnerable economically by denying them legal status in an economic system that desperately needs their work. It will also leave them vulnerable legally, either because they must work to support their families despite being undocumented, or because their status is held entirely within the power of another to grant or deny.

The dependence of women on family-sponsored immigration by the numbers:

- Women constituted 60.1% of those entering as immediate relatives, compared to 39.9% of men. A lower, but still significant, percentage of women enter on family preference visas (53.8% women vs. 46.2% men).[i]
- 69% of all female Legal Permanent Residents (LPRs) entered through the family immigration system, compared to just 50.6% of all male LPRs.[ii]
- Women are 38% more likely attain LPR status through a family-based visa than men.[iii]

Women and the employment-based visa system:

- Men were more likely to be principal visa holders for employment-based visas: 72.2% of men as compared to women 27.7%.[iv]
- Women were much more likely than men to be dependents (spouses and children) of the principal visa holder: 66.3% of women and 33.7% of men are dependents.[v]
- Only 3.9% of all female LPRs entered through the employment-based system as principal visa holders. In contrast, 12.2% of all male LPRs entered as principal visa holders.[vi]
- Men were 212% more likely to enter as a principal visa holder for an employment-based visa, while women were 64.6% more likely to enter as dependent visa holders.[vii]
- This is true despite the fact that Native-born and foreign-born women were roughly equal when it came to having a bachelor's degree: 21.4% of native-born women compared to 20.3% of native-born women.[viii]

Immigration exacerbates women's vulnerability, heightening women's dependency on husbands, intimate partners, sponsors or employers, nuclear or extended families, and their own ethnic/racial communities.[ix] Reducing access to family immigration enhances the likelihood that women will face victimization by limiting avenues through which women can attain legal immigration status. Cutting back on family-based immigration options has a disparate impact on immigrant women and should be avoided.

Problems with a Point/Merit Based System

Immigrant women play a vital role in taking on private domestic work, enabling US women to participate in the workforce while the children are cared for, their homes run smoothly, and the elderly family members attended. Any system of points or merits

would have to take into account the myriad of ways this work is vital to the continuing growth of our economy. It would have to acknowledge that immigrant women who fill these roles not only take on a much needed job, but they enable highly skilled women professionals to leave the home to work. A problematic part of any point system is that bureaucrats are making judgments about the value of work generally, without the ability to hear, for example, how important a nanny is to the functioning of an entire family, including two adults who are active in the US workforce.

The Statistics on Women and Immigration

Table 1. LPR Status Granted Through Family-Sponsored Visas by Gender

	% Of All LPRs (By gender)	All LPRs	Total Family-Sponsored
Female	69.7%	515,314	359,425
Male	50.6%	430,662	261,003
	Females 37.7% more likely to enter on a family-sponsored visa	Total 945,976	

*Data Source: Kelly Jeffreys, *Characteristics of Family-Sponsored Legal Permanent Residents: 2004*. Washington, DC: Office of Immigration Statistics, Department of Homeland Security, October 2005, "Table 1:Demographic Characteristics of All LPRs and Family-Sponsored Principal LPRs": Fiscal Year 2004

Table 2. LPR Status Granted Through Employment-Based Visas by Gender

	% Of All LPRs (by gender)	All LPRs	Employment-Based Principals	% Of All LPRs (by gender)	% Of All LPRs (total)	Employment-Base Dependents
Female	3.9%	515,314	20,125	10.7%	5.8%	54,9(
Male	12.2%	430,662	52,417	6.5%	2.9%	27,87
	Males 211.7% more likely to enter as principals	945,976		Females 64.6% more likely to enter as dependents		

*Data Source: Kelly Jeffreys, *Characteristics of Employment-Based Legal Permanent Residents: 2004*. Washington, DC: Office of Immigration Statistics, Department of Homeland Security, October 2005, "Table 1:Demographic Characteristics of All LPRs and Employment-Based Principal LPRs": Fiscal Year 2004.

IV. Conclusion

The White House Proposal on immigration makes drastic and unprecedented changes to our family immigration system. It ignores the vital role adult siblings and adult children play in raising a healthy family in America. It increases the power differential between those who have visas and family members who are derivatives, as well as those who can no longer become derivatives. This power differential will increase the barriers faced by immigrant women living in a violent situations. Denying legal status to family members, who may be necessary for the survival of a family, will only increase the numbers of immigrants, often women, who are forced to participate in a shadow economy as nannies, cleaning personnel, and elderly support.

In this testimony we want to stress the importance of family immigration to our society and to immigrant women. A thriving family immigration system is an important tool in the struggle to end violence against immigrant women. Family immigration is not a question of choosing between workers or dependents. It is a question of family values, valuing families, and recognizing the multitude of ways in which family members work for each other and our larger society. Comprehensive immigration reform must be inclusive and adequate in addressing the needs of all people, men and women, because our American family requires many different contributions.

---

[i] Kelly Jeffreys, *Characteristics of Family-Sponsored Legal Permanent Residents: 2004*. Washington, DC: Office of Immigration Statistics, Department of Homeland Security, October 2005, "Table 1:Demographic Characteristics of All LPRs and Family-Sponsored Principal LPRs": Fiscal Year 2004.
[ii] *See* Table 1.
[iii] *Ibid.*
[iv] Kelly Jeffreys, *Characteristics of Employment-Based Legal Permanent Residents: 2004*. Washington, DC: Office of Immigration Statistics, Department of Homeland Security, October 2005, "Table 1:Demographic Characteristics of All LPRs and Employment-Based Principal LPRs": Fiscal Year 2004.
[v] *Ibid.*
[vi] *See* Table 2.
[vii] *Ibid.*
[viii] 2000 U.S. Decennial Census.
[ix] Edna Erez. "Immigration, Culture Conflict and Domestic Violence/Woman Battering," *Crime Prevention and Community Safety: An International Journal* 2:27-36, 2000 in Edna Erez and Carolyn Copps Hartley. "Battered Immigrant Women in the Legal System," *Western Criminology Review* 4(2), 2003, page 156.

LETTER FROM THE LUTHERAN IMMIGRATION AND REFUGEE SERVICE TO THE HONORABLE ZOE LOFGREN, CHAIRWOMAN, SUBCOMMITTEE ON IMMIGRATION, CITIZENSHIP, REFUGEES, BORDER SECURITY, AND INTERNATIONAL LAW

National Headquarters
700 Light Street • Baltimore, Maryland 21230
410/230-2700 • fax: 410/230-2890 • lirs@lirs.org

Legislative Affairs Office
122 C Street, N.W., Suite 125 • Washington, D.C. 20001
202/783-7509 • fax: 202/783-7502 • dc@lirs.org

www.lirs.org

May 6, 2007

The Honorable Zoe Lofgren
Chair
House Subcommittee on Immigration, Citizenship,
Refugees, Border Security and International Law
U.S. House of Representatives
Washington, DC

Dear Ms. Lofgren,

We write to express our deep concern about the direction that the current comprehensive immigration reform negotiations are headed, specifically with respect to the White House plan to eliminate or significantly reduce our family system of immigration.

As bishops of the Evangelical Lutheran Church in America (ELCA), we represent voices of leadership for the largest Lutheran denomination in the United States with more than 5 million members. All of us are members of the ELCA's task force on immigration designated one year ago following the church-wide resolution to place immigration at the forefront of our agenda for policy reform. We are joined in this letter by Lutheran Immigration and Refugee Service, the national Lutheran policy and service agency for refugees and immigrants.

The White House plan proposes cutting many of the existing family visa preference categories that would dramatically impact the ability of adult children, siblings, and even parents to reunify with their family. Such a change would be a fundamental shift away from a family-based system. For decades, indeed centuries, families have been the backbone of immigrant communities and American society. As a nation that prides itself on family values and traditions, such a path would not be wise.

We urge the Subcommittee to resist efforts to undermine the existing family reunification program that has long been the cornerstone of immigration policy. Instead of eliminating the family visa program, Congress should bolster family reunification. The only thing that should be eliminated is the extensive backlogs keeping loved ones apart sometimes for over a decade.

Bringing New Hope and New Life

A cooperative agency of the Evangelical Lutheran Church in America, the Lutheran Church–Missouri Synod, and the Latvian Evangelical Lutheran Church in America

Now more than ever, our nation needs leadership on immigration reform. We ask the Subcommittee to forge a meaningful compromise that will protect family values, meet the needs of our economy, ensure dignity and rights for immigrants, and serve the common good.

Sincerely,

The Rev. Edward R. Benoway, bishop of the Florida-Bahamas Synod

The Rev. Stephen P. Bouman, bishop of the Metropolitan New York Synod

The Rev. Paul J. Blom, bishop of the Texas-Louisiana Gulf Coast Synod

The Rev. H. Gerard Knoche, bishop of the Delaware-Maryland Synod

The Rev. Theodore F. Schneider, bishop of the Metropolitan Washington, D.C., Synod

The Rev. Paul W. Stumme-Diers, bishop of the Greater Milwaukee Synod

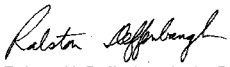

Ralston H. Deffenbaugh, Jr., President, Lutheran Immigration and Refugee Service

PREPARED STATEMENT OF KAREN K. NARASAKI, PRESIDENT & EXECUTIVE DIRECTOR, ASIAN AMERICAN JUSTICE CENTER ON "THE IMPORTANCE OF FAMILY-BASED IMMIGRATION TO AMERICAN SOCIETY AND THE ECONOMY"

ADVANCING EQUALITY

CONGRESSIONAL TESTIMONY

The Importance of Family-Based Immigration to American Society and the Economy

Written Testimony for
The Subcommittee on Immigration
Committee on the Judiciary
United States House of Representatives
Hearing on Role of Family-Based Immigration in the U.S. Immigration System
May 8, 2007

Karen K. Narasaki
President & Executive Director
Asian American Justice Center

1140 Connecticut Ave. NW, Suite 1200, Washington, D.C. 20036 • T 202.296.2300 • F 202.296.2318 • www.advancingequality.org

AFFILIATES: Asian Pacific American Legal Center in Los Angeles • Asian Law Caucus in San Francisco • Asian American Institute in Chicago

Executive Summary

Asian Immigration

Of the 13.9 Asian Americans in the United States, over 60 percent are foreign born. Therefore immigration and immigrant rights are a priority for the Asian American community and the Asian American Justice Center. Over 90 percent of Asian immigration comes through the family categories. In 2005, for example, 56 percent of immigrants from Asia came to the U.S. through family immigration. However, Asian countries suffer from some of the worst immigration backlogs in the world and an estimated 1.5 million family members of Asian American U.S. citizens are currently waiting in line. Studies have shown that the long backlogs in the family-based immigration system contribute to the rise in undocumented immigration, which includes 1.3 million Asian Americans without legal immigration status. AAJC cannot support any immigration legislation that does not allow the entire family backlog to come in before immigrants seeking legalization.

Family Reunification

Family reunification is a fundamental cornerstone of our nation's legal immigration system. Families are the backbone of our country and their unity promotes the stability, health, and productivity of family members contributing to the economic and social welfare of the United States. In addition, the ability to reunite with family members is important to attracting and retaining the most talented and hardest working immigrants the world has to offer. AAJC cannot support any immigration legislation that significantly cuts the current family immigration categories and family-based visa allocations.

Point Systems

Point systems result in a mismatch of skills to fit the needs of the economy. High-skilled immigrants who are admitted because of their education and work experience have no guarantee of finding a high-skilled job in their field. Those generally left out of the system will include those with poor language skills, those without high school diplomas, older persons, those with no work experience in high-skilled jobs, and those with work experience in low-skilled or semi-skilled industries. U.S. citizens with family members in countries that do not have strong educational systems, traditions of English-language education, and recognized certification systems will be unable to reunite their entire families. If a point system must be considered, AAJC recommends a pilot program to test its workability and evaluate its impact. However, a point system cannot come as a tradeoff for eliminating the family categories or the ability of legalizing immigrants and new workers to sponsor their family members. Nor can a pilot program substitute for enacting comprehensive immigration reform now.

Madame Chairwoman and Members of the Subcommittee:

Thank you for the opportunity to submit the following testimony on behalf of the Asian American Justice Center (formerly the National Asian Pacific American Legal Consortium). The Asian American Justice Center (AAJC) works to advance the human and civil rights of Asian Americans through advocacy, public policy, public education, and litigation. AAJC is one of the nation's leading experts on issues of importance to the Asian American community including: affirmative action, anti-Asian violence prevention/race relations, census, immigrant rights, immigration, language access, and voting rights. AAJC is affiliated with the Asian American Institute of Chicago, Asian Pacific American Legal Center of Southern California in Los Angeles and the Asian Law Caucus in San Francisco.

Because over 60 percent of the Asian American community is foreign born, immigration and immigrant rights are a priority for AAJC. The goal of AAJC's immigration and immigrant rights program is to pursue fair, humane and nondiscriminatory immigration policies. We educate the general public and the Asian American community through use of ethnic and mainstream media, conferences and briefings; inform policy makers as to the impact of various restrictive and discriminatory proposals; provide the community with information on a wide range of immigration issues; monitor implementation of immigration laws by the Department of Homeland Security and other agencies; advocate for tough enforcement of anti-discrimination laws; and develop and disseminate education materials about various aspects of immigration laws of most relevance to the Asian American community. Furthermore, AAJC seeks to ensure Asian American communities have a strong voice in the national debate over how to reform our broken immigration system.

Introduction

Family reunification is a fundamental cornerstone of our nation's legal immigration system. The current push to pass a comprehensive immigration reform bill must not abandon this foundation, but rather improve the ability of American families to contribute to our American economy. The ability to reunite with family members is important to attracting and retaining the most talented and hardest working immigrants the world has to offer.

According to the 2005 American Community Survey by the U.S. Census Bureau, 61 percent (over 8.5 million) of all Asians living in the U.S. are immigrants.[1] Of the foreign-born Asian Americans, about 53 percent (over 4.5 million) immigrated to the U.S. within the last 15 years. The break-down of native-born and foreign-born U.S. citizens and non-citizens in the Asian American community are as follows:

- 38.5 percent are native-born U.S. citizens.
- 34.2 percent are foreign-born but naturalized U.S. citizens.
- 27.3 percent are foreign-born and not U.S. citizens.

Although many foreign-born Asian Americans arrive in the United States through the employment-based immigration system or as refugees and asylees, the majority of Asians immigrating to the

[1] http://factfinder.census.gov/home/saff/main.html?_lang=en

U.S. do so through the family-based immigration system. In 2005, 56 percent of immigrants from Asia came to the U.S. through family immigration. However, Asian countries suffer from some of the worst immigration backlogs in the world.[2] In the family immigration system, a U.S. citizen parent petitioning for an unmarried adult son or daughter from China must wait approximately 6 years before s/he can immigrate to the U.S. A U.S. citizen petitioning for a brother or sister from India must wait approximately 11 years before s/he can immigrate to the U.S. If the brother or sister is from the Philippines, the wait is approximately 23 years.

In the employment-based immigration system, highly educated and skilled immigrants from China, India, and the Philippines currently face possible waits of 4 to 6 years before they can become lawful permanent residents. Finally, unless you have a qualifying U.S. citizen or permanent resident family member who can petition for you, or have highly specialized skills and/or post-secondary education, it is virtually impossible to legally immigrate to the U.S. As a result, the population of undocumented immigrants from Asia continues to rise.

The Department of Homeland Security's Office of Immigration Statistics estimates 1.3 million of the 10.5 million total undocumented immigrants in the United States in 2005 originated from Asia.[3] To put this number in context, there were 13.9 million Asian Americans living in the U.S. in 2005. This would mean that approximately 1 in 10 Asian Americans do not have access to legal immigration status.

In order to solve these problems, Asian Americans need comprehensive immigration reform that will:

- Allow the entire family immigration backlog to come through before undocumented immigrants gain legal status;
- Facilitate timely and full reunification of families, including parents, adult children and siblings;
- Provide legal status and a path to permanent residence for undocumented immigrants who work hard, pay taxes, undergo criminal and national security checks, and learn English and civics;
- Create legal ways for people who want to contribute to our economy to come work in the U.S.; and
- Assist more immigrants to learn English and prepare for citizenship.

The History of Asian Immigration in the United States

Historical Exclusion

Exactly 125 years after the United States separated countless families and halted innumerable dreams with racially biased immigration policy, law makers are again considering anti-family measures as the means to reform a broken immigration system. The Chinese Exclusion Act of 1882, which prohibited the immigration of Chinese laborers, epitomizes the early record on

[2] http://travel.state.gov/visa/frvi/bulletin/bulletin_1360.html
[3] http://www.dhs.gov/xlibrary/assets/statistics/publications/ILL_PE_2005.pdf

immigration from Asia. In 1907, anti-Asian sentiment culminated in the Gentleman's Agreement limiting Japanese immigration. Asian immigration was further restricted by the Immigration Act of 1917 which banned immigration from almost all countries in the Asia-pacific region; the Quota Law of 1921 which limited the annual immigration of a given nationality to three percent of the number of such persons residing in the United States as of 1910; and the National Origins Act of 1924, which banned immigration of persons who were ineligible for citizenship. A decade later, the Tydings-McDuffie Act of 1934 placed a quota of 50 Filipino immigrants per year.

It has been a generation since the Chinese Exclusion Act and its progeny were repealed in 1943. Yet after the repeal, discriminatory quotas were nevertheless set using formulas giving special preference to immigration from Europe. Until 1965, for example, the German annual quota was almost 26,000 and the Irish almost 18,000 while the annual quota from China was 105, for Japan was 185, the Philippines was 100 and the Pacific Islands was 100.

The intensity of the discrimination against immigrants from Asia is reflected in the fact that they were ineligible to become naturalized citizens for over 160 years. A 1790 law allowed only "free white persons" to become citizens. Even after the law was changed to include African Americans, similar legislation to include Asian Americans was rejected. The Supreme Court upheld the laws making Asian immigrants ineligible for citizenship. The last of these laws were not repealed until 1952.

Previous Reforms

Congress sought to eliminate most of the racial barriers imbedded in the immigration system with the passage of the Immigration and Naturalization Act of 1965. Unfortunately the Act did not address the effect of earlier biases. In fact, the 20,000 per country limit, imposed without any connection to size of originating country or demand, resulted in extremely long waiting lists for Asian immigrants.

The Immigration Act of 1990 also failed to address the tremendous backlogs that already existed for countries like Mexico, India, the Philippines, South Korea, and China. Instead, the problem was exacerbated with the reduction in number of visas available for adult sons and daughters of United States citizens. At the time the backlog consisted primarily of children of Filipino veterans who were allowed to naturalize under the Act because of their service to this country in fighting as a part of the United States Armed Forces in World War II. Despite this fact, the quota was cut in half and other family categories were reduced, causing the backlog to increase by close to 70 percent.

As a result, although Asians have constituted over 30 percent of the country's immigration for the past two decades, the community still makes up only about 4 percent of the United States population. Most recent numbers indicate that well over 1.5 million Asian immigrants are still waiting in backlogs for entry visas to reunite with their families. Almost half of immigrants waiting to join their loved ones in the United States are from Asian countries. Thus any additional restrictions or reduction in the overall numbers, particularly in the family preference categories, will have an inordinate impact on Asian American families.

Family Reunification as the Foundation of Our Immigration System

In keeping with American notions of the importance of the family, immigration through a family member who is a US citizen or permanent resident is the most common way of gaining US residency. Qualifying relationships are grouped into two main categories – immediate relatives and other close family members. Currently, spouses, unmarried minor children, and parents are considered immediate relatives. Other close family members of citizens and permanent residents are also allowed to immigrate. These include unmarried adult children of citizens, spouses and unmarried children of permanent residents, married adult children of citizens, and siblings of citizens. Currently, the annual ceiling for family-based immigration is 480,000 individuals per year. This number is divided into immediate relatives of U.S. citizens as well as the four different family preferences listed above. There is also a cap on how many people are allowed into the United States from any one country. A combination of these visa ceilings as well as the per-country cap often contributes to long waits for the average immigrant family.

Benefits of Family-Based Immigration

Family reunification has rightly been the cornerstone of United States immigration policy. Families are the backbone of our country and their unity promotes the stability, health, and productivity of family members contributing to the economic and social welfare of the United States.

Employment-based immigrants are not the only ones who are vital to the economy. Family-based immigrants tend to come in the prime of their working lives. In addition, families pool their resources to start and run businesses, purchase homes and send children to college. Many immigrant businesses are indeed run by families.

Family members help to take care of young children so that other family members can work. Brothers and sisters support each other's dreams, help each other find jobs and provide support and care for each other's families. We cannot attract and retain the best and the brightest if those coming to share their hard work and talents face long term or permanent separation from close family members. Long term separation of families generates stress and is distracting to those in our work force. It forces many immigrant workers who are separated from their families to send money overseas rather than being able to invest all of it in their local communities.

America has always recognized that family members play an important role in helping immigrants build communities. Siblings as well as parents and their adult children often share the same home in immigrant families. Even when they don't, they help teach the newcomers what they need to understand about American values and about the job market. They provide an important safety net, not just for the immigrants but also for the U.S. citizen relatives. They take care of one another in times of economic, physical or emotional hardships, thus lessening the need for reliance on government services or private charities. In addition, having loved ones together in the U.S. increases the ability of immigrants to focus on putting down permanent roots in their new country.

Family immigration reflects the strong family values that are at the foundation of our nation while also contributing to America's social and economic well being. Any proposal that would eliminate family categories, prohibit immigrants legalizing their status from reuniting with their families, or

force immigrant workers to maintain lengthy separations from their family violates those values. In addition, the entire backlog of immigrants, who have waited in line for as many as 22 years to join their families, must get their visas before immigrants seeking to gain legal status.

Proposed Reforms

Although the House of Representatives passed the anti-immigrant H.R. 4437 in 2005 and the Senate passed a more comprehensive but deeply flawed S. 2611 the following year, neither bill became law. On March 22, 2007, Congressmen Luis Gutierrez (D-IL) and Jeff Flake (R-AZ) introduced the STRIVE (Security Through Regularized Immigration and a Vibrant Economy) Act. This comprehensive immigration reform bill contains workable solutions in provisions that would eliminate the backlog for family-based immigrants in approximately six years.

Unlike the STRIVE Act, a proposal created by Senator Jon Kyl (R-AZ) and supported by the Bush Administration includes plans that would severely impair the ability of U.S. citizens to bring their parents with an arbitrary and unrealistic cap on the number of available visas. The proposal would also eliminate all visas for siblings and adult children of U.S. citizens. In addition, this proposal arbitrarily cuts off the ability of immigrants already waiting in line.

The details of this plan continue to change, but they carry on a long tradition of attacks on family-based immigration that began soon after Asian and Latino immigrants became the major users of the kinship system in the 1980s.

The concept of a so-called "merit-based" point system for permanent residency has also emerged. Proponents of the proposal look to Canada's point system and argue that a similar model will serve America's economy more effectively than the existing family-based immigration system. The experience in Canada has shown that a point system results in a mismatch of skills to fit the needs of the economy.

In fact, Canadian businesses struggle with their point system, because they cannot keep jobs unfilled while visas are being processed. The system works best for individuals who are already working legally in Canada on a temporary visa. High-skilled immigrants who are admitted because of their education and work experience have no guarantee of finding a high-skilled job in their field. Low skilled workers do not qualify for visas under the system and foreign credentials are often not accepted. This forces many high-skilled and experienced immigrants to take low-skilled jobs in entirely new fields.

For some Asian immigrants, especially family members of H1-B visa-holders, the point system may be beneficial. However, those generally left out of the system will include those with poor language skills, those without high school diplomas, older persons, those with no work experience in high-skilled jobs, and those with work experience in low-skilled or semi-skilled industries. U.S. citizens with family members in countries that do not have strong educational systems, traditions of English-language education, and recognized certification systems will be unable to reunite their entire families.

False Arguments and False Choices

Many arguments have been made for changing the current family-based immigration system. Some argue that the waiting periods for visas are too long and encourage undocumented immigration. While the backlogs are truly a problem, the real solution is to raise the number of available visas to meet the demand of law-abiding immigrants and their families waiting in the United States. Eliminating the family immigration categories will only create greater strain on families and leave people with no legal means to come to this country.

Others argue that the family-based immigration system causes "chain-migration." Some anti-immigrant groups even claim that one single immigrant will ultimately bring 373 additional immigrants.[4] That study was replete with faulty assumptions and questionable math. The reality is to the contrary. Researchers have found that, on average, an immigrant will bring in 1.2 additional immigrants.[5]

One of the limitations on the ability of immigrants to bring in family, in addition to the strict quota assigned each category, is that our laws require the sponsor of a family member to sign an affidavit of support to guarantee they will take care of the family member being brought in. Sponsors must also prove they have enough income to cover that pledge. This provides a limit on sponsorship and a strong incentive for the sponsors to help ensure the family member they are bring in will integrate and be self sufficient.

Opponents of immigration often claim, mistakenly, that each immigrant can bring in extended family members, such as cousin, uncles, and aunts. Under our immigration system today, visas in very controlled numbers are available only for a spouse, minor children, parents, adult children, and brothers and sisters. There are no visas for aunts, uncles, and cousins.

Some argue that the family immigration system does not benefit the economy, thus should be changed. Proposals which dismantle the family immigration system in the name of the U.S. economy do not address the actual needs of American businesses. Americans and foreign workers are demanding more high-skilled and low-skilled visas, but some policy makers choose to distort the issue and offer a point system that will leave high-skilled immigrants without jobs in the United States and low-skilled workers without opportunities to contribute to our economy.

Not only are family-based immigrants helpful to the economy, there is no need to cut family immigration in order to expand employment immigration. In the late 1990s, there was very high immigration to the U.S., including more than two million family-based immigrants. The economy easily absorbed all of the employment- *and* family-based immigrants – and a record number of undocumented immigrants. During the same period, unemployment in the U.S. was at a near-record low.

[4] http://numbersusa.com/PDFs/ChainMigrationchart.pdf
[5] http://www12.georgetown.edu/sfs/isim/Event%20Summaries&Speeches/Lowell%20ProjectionsWorkshop.pdf

The U.S. economy will increasingly need new workers to maintain and grow our economy as the baby boomers begin to retire. Immigration – both family- and employment-based – will help to provide much needed labor. While we do need to reform the employment-based immigration system to better fill the needs of our changing demographics and economy, such reform need not and should not come at the expense of family immigration. Indeed, employment-based and family-based immigration are intertwined. Family-based immigration helps to support and supplement employment-based immigration.

One additional false argument being used against the current family-based immigration system is that the legalization of 10 to 15 million undocumented immigrants demands countermeasures to stave off a massive flood of relatives entering the United States. As discussed above, the current family-based immigration system already has effective safeguards against such mass migration. In addition, it is in America's interest to make sure that all new legal immigrants have the familial support necessary to assimilate into this nation.

Studies have shown that the long backlogs in the family-based immigration system contribute to the rise in undocumented immigration.[6] Allowing the entire backlog to come through in a timely fashion would help solve this situation. Not addressing the backlogs or arbitrarily invalidating the applications of those who have played by the rules and waited in line would only exasperate the situation. In addition, eliminating family preference categories or reducing the numbers of available visas will force many immigrants to choose between family unity and following the law.

Finally, the days of America as the only land of opportunity are long gone. Immigrants have many choices when it comes to setting down roots and contributing to a new nation. Family values do not stop at the Rio Grande, as President George Bush repeatedly states, and they help guide individuals around the world in their decisions to immigrate to another country.[7] America has no other choice, but to keep family reunification the cornerstone of its immigration policies.

Conclusion

Family-based immigration benefits the U.S. economy, U.S. citizens, and U.S. communities. We need to make the family immigration system even better to continue the American tradition of allowing family reunification to foster the entrepreneurial spirit, build stronger communities, and attract the best and brightest the world has to offer.

AAJC cannot support any policy that does not address the entire family immigration backlog in a fair and workable manner or any law that significantly cuts the current family immigration categories and family-based visa allocations. Furthermore, legislation that prohibits immigrants legalizing their status from reuniting with their families or force immigrant workers to maintain lengthy separations from their family is unacceptable. The family members who are waiting in line now and those who will want to be reunited with family in the United States in the future must not be placed on the negotiating table.

---

[6] *Placing Immigrants at Risk: The Impact of Our Laws and Policies on American Families*, Catholic Legal Immigration Network, 2000.
[7] http://www.whitehouse.gov/news/releases/2007/03/20070313-9.html

"ADMISSIONS OF LAWFUL PERMANENT RESIDENTS (ALL CATEGORIES) 2001–2005" COMPILED BY THE CONGRESSIONAL RESEARCH SERVICE, SUBMITTED TO THE RECORD BY THE HONORABLE STEVE KING, RANKING MEMBER, SUBCOMMITTEE ON IMMIGRATION, CITIZENSHIP, REFUGEES, BORDER SECURITY, AND INTERNATIONAL LAW

Admissions of Lawful Permanent Residents (all categories) 2001-2005

Type and class of admission		**2001**	**2002**	**2003**	**2004**	**2005**
Family-sponsored preferences		231,699	186,880	158,796	214,355	212,970
First	Unmarried sons/daughters of U.S. citizens and their children	27,003	23,517	21,471	26,380	24,729
Second	Spouses, children, and unmarried sons/daughters of alien residents	112,015	84,785	53,195	93,609	100,139
Third	Married sons/daughters of U.S. citizens and their spouses and children	24,830	21,041	27,287	28,695	22,953
Fourth	Brothers/sisters of U.S. citizens (at least 21 years of age) and their spouses and children	67,851	57,537	56,843	65,671	65,149
Employment-based preferences		178,702	173,814	81,727	155,330	246,878
First	Priority workers and their spouses and children	41,672	34,168	14,453	31,291	64,731
Second	Professionals with advanced degrees or aliens of exceptional ability and their spouses and children	42,550	44,316	15,406	32,534	42,597
Third	Skilled workers, professionals, and unskilled workers and their spouses and children	85,847	88,002	46,415	85,969	129,070

Fourth	Special immigrants and their spouses and children	8,442	7,186	5,389	5,407	10,134
Fifth	Employment creation (investors)and their spouses and children	191	142	64	129	346
Immediate relatives of U.S. citizens:		***439,972***	***483,676***	***331,286***	***417,815***	***436,231***
Spouses		***268,294***	***293,219***	***183,796***	***252,193***	***259,144***
Children		***91,275***	***96,941***	***77,948***	***88,088***	***94,974***
Parents		***80,403***	***93,516***	***69,542***	***77,534***	***82,113***
Refugees		96,870	115,601	34,362	61,013	112,676
Asylees		11,111	10,197	10,402	10,217	30,286
Diversity		41,989	42,820	46,335	50,084	46,234
Cancellation of removal		22,188	23,642	28,990	32,702	20,785
Parolees		5,349	6,018	4,196	7,121	7,715
Nicaraguan Adjustment and Central American Relief Act (NACARA)		18,663	9,307	2,498	2,292	1,155
Haitian Refugee Immigration Fairness Act (HRIFA)		10,064	5,345	1,406	2,451	2,820
Other		2,295	2,056	3,544	4,503	4,623
Total		**1,058,902**	**1,059,356**	**703,542**	**957,883**	**1,122,373**

Source: CRS analysis of data from the U.S. Department of Homeland Security, *FY2005 Statistical Yearbook of Immigration*, 2006. (Chart printed from CRS RL32235 – U.S. Immigration Policy on Permanent Admissions (updated December 13, 2006)).

"FAMILY-BASED ADMISSIONS 2006," PUBLISHED BY THE U.S. DEPARTMENT OF HOMELAND SECURITY, SUBMITTED TO THE RECORD BY THE HONORABLE STEVE KING, RANKING MEMBER, SUBCOMMITTEE ON IMMIGRATION, CITIZENSHIP, REFUGEES, BORDER SECURITY, AND INTERNATIONAL LAW

FAMILY-BASED ADMISSIONS 2006[1]

Total Family-sponsored preferences: 222,229

1st preference: 25,432

2d preference: 112,051

3d preference: 21,491

4th preference: 63,255

Total Immediate relatives: 581,106

Spouses of US citizens: 339,843

Parents of US citizens: 120,441

Children of US citizens: 120,199

[1] DHS, Annual Flow Report, U.S. Legal Permanent Residents:2006 (March 2007)

RESPONSES TO POST-HEARING QUESTIONS FROM THE HONORABLE PHIL GINGREY, A REPRESENTATIVE IN CONGRESS FROM THE STATE OF GEORGIA

May 25, 2007

The Honorable Phil Gingrey, M.D.
U.S. House of Representatives
119 Cannon House Office Building
Washington, DC 20515

Dear Congressman Gingrey:

Thank you for your recent appearance before the Committee on the Judiciary's Subcommittee on Immigration, Citizenship, Refugees, Border Security, and International Law. Your testimony was insightful and will assist the Subommittee as it moves forward with comprehensive immigration reform.

Enclosed you will find additional questions from members of the Subommittee to supplement the information you provided at the May 8, 2007, hearing. Please deliver your written responses to the attention of Benjamin Staub of the Subcommittee on Immigration, Citizenship, Border Security, and International Law, 2138 Rayburn House Office Building, Washington, DC, 20515 no later than June 29, 2007. If you have any further questions or concerns, please contact Benjamin Staub at (202) 225-3926.

Sincerely,

Zoe Lofgren
Chairwoman
Subcommittee on Immigration, Citizenship, Refugees, Border Security, and International Law

Enclosure

The Honorable Phil Gingrey, M.D.
Page 2
May 25, 2007

From the Honorable Bob Goodlatte

1. Which do you think is more important (pick one):

   (1) Maintaining the relatively broad categories of family-based immigration, such as adult siblings, aunts or cousins, or
   (2) Ensuring that the reunification for close relatives, such as children and parents, is more immediate and reducing the backlogs for these closer relatives

REPLY: Number two. I believe, concurring with the wisdom of the Jordan Commission, that our nation must prioritize immigrants, guided by what is most in the national interest. The United States is the most generous nation in the world where immigration is concerned. We have nothing to apologize for in any limitations or conditions or priorities we may place on our immigration selection/qualification criteria. We could drastically cut legal immigration levels and remain the most welcoming nation in the world. Therefore, as the Jordan Commission recommended, the priority where family-based immigration is concerned should be on the nuclear family – uniting husband and wife, parents with minor children. Immigrants make a choice. It is they who affirmatively decide to disunite their family and to separate from relatives, clan, and homeland. That means it is not the responsibility of the United States, and patently unfair to the generous, gracious people of the United States, to have to accept all comers, including someone who happens to have a blood or marital relation to an immigrant. In America, households may comprise those beyond the nuclear family. However, the norm and the only thing we should feel any obligation to facilitate for lawful immigrants (as opposed to nonimmigrants or other aliens) is uniting nuclear families. To reunite with relatives beyond the closest relatives should entail immigrants' reversing their decision about their country of residence. The unintended consequences of overly generous immigration to extended family members have included backlogs whose effect has been to put more distant relatives ahead of nuclear family members. Thus, the most reasonable, advisable step would be to limit family visas to nuclear family members, as my bill would do.

2. Do you believe that we should give priority to family-based and employment-based immigration over immigration that is based totally at random, such as the visa lottery program?

REPLY: Yes, rational immigration policy, based on serving the national interest, would serve to unite nuclear family members, husbands with wives, parents with minor children, and those with employment skills that our country has a demonstrated,

bona fide need of. The visa lottery awards visas based on statistical chance. The lottery may have had good intentions behind it, but it has proven a fiasco that fails to serve our national interest. It, too, the Jordan Commission recommended ending. The lottery only exacerbates chain migration, in which extended family visa categories result. That is, the visa lottery begins entire new chains of migration, based on the odds, and regardless of any skills, education, talents, intellect or other desirable characteristics the lottery winner may or may not possess. The visa lottery should be eliminated.

RESPONSES TO POST-HEARING QUESTIONS FROM HARRIET DULEEP, PH.D., RESEARCH PROFESSOR OF PUBLIC POLICY, THOMAS JEFFERSON PROGRAM IN PUBLIC POLICY, THE COLLEGE OF WILLIAM AND MARY

May 25, 2007

Harriet Duleep, Ph.D.
Research Professor of Public Policy, Thomas Jefferson Program in Public Policy
The College of William and Mary
4417 Yuma Street, NW
Washington, DC 20016

Dear Dr. Duleep:

Thank you for your recent appearance before the Committee on the Judiciary's Subcommittee on Immigration, Citizenship, Refugees, Border Security, and International Law. Your testimony was insightful and will assist the Subommittee as it moves forward with comprehensive immigration reform.

Enclosed you will find additional questions from members of the Subommittee to supplement the information you provided at the May 8, 2007, hearing. Please deliver your written responses to the attention of Benjamin Staub of the Subcommittee on Immigration, Citizenship, Border Security, and International Law, 2138 Rayburn House Office Building, Washington, DC, 20515 no later than June 29, 2007. If you have any further questions or concerns, please contact Benjamin Staub at (202) 225-3926.

Sincerely,

Zoe Lofgren
Chairwoman
Subcommittee on Immigration, Citizenship, Refugees, Border Security, and International Law

Enclosure

Harriet Duleep, Ph.D.
Page 2
May 25, 2007

From the Honorable Bob Goodlatte

1. Which do you think is more important (pick one):

   (1) Maintaining the relatively broad categories of family-based immigration, such as adult siblings, aunts or cousins, or
   (2) Ensuring that the reunification for close relatives, such as children and parents, is more immediate and reducing the backlogs for these closer relatives

2. Do you believe that we should give priority to family-based and employment-based immigration over immigration that is based totally at random, such as the visa lottery program?

Both questions assume a policy of a fixed number of immigrants that is divided between categories. But each class of immigrant has different patterns of economic and social effects. The immigration of an Irish Ph.D. physicist does not make it harder for the U.S. to absorb an Irish cab driver. They compete in different labor markets and offer different skills to the economy. Moreover, letting in the cab driver may make it easier to recruit the physicist, if they are siblings.

If it is necessary for political reasons to impose an otherwise unnecessary common ceiling over all the disparate types of immigration, I would make the following choices. For humanitarian reasons, I would favor family unification over employment and lottery, and close relatives over more distant relatives. But in doing so I would not want to totally eliminate any category (with the possible exception of lottery, and even there only if it became meaninglessly small). Each provides different types of benefits to the United States. Even my lowest ranked program, the lottery, succeeded in providing the U.S. useful connections to countries from which we otherwise had few migrants, as well as bringing in immigrants with surprisingly high education levels.

RESPONSES TO POST-HEARING QUESTIONS FROM BILL ONG HING, PROFESSOR OF LAW AND ASIAN AMERICAN STUDIES, UNIVERSITY OF CALIFORNIA-DAVIS

Bill Ong Hing
Responses to Additional Questions

From the Honorable Steve King

1. Please detail your suggestions for how a skills-based immigration system can be structured so that it is not subject to challenge for being biased for or against any specific race, ethnicity, or national origin.

The current selection system is a starting point. Currently, the family and employment-based immigration preferences are tied to equal per country numerical limitations. As you know, I am generally in favor of retaining the current family and employment-based categories. Any proposed change should at least continue to be tied to equal per country numerical limitations to avoid any bias.

From the Honorable Bob Goodlatte

2. Which do you think is more important (pick one):
   (1) Maintaining the relatively broad categories of family-based immigration, such as adult siblings, aunts or cousins, or
   (2) Ensuring that the reunification for close relatives, such as children and parents, is more immediate and reducing the backlogs for these closer relatives

I'm puzzled by the reference to "aunts or cousins" in number (1) because neither aunts nor cousins are part of the current family-based system. However, I am in favor of retaining the current family-based system, including unlimited visas for parents of adult U.S. citizens (part of the immediate relative system), siblings of adult citizens, and adult, unmarried sons and daughters of lawful permanent residents. To me, these relatives are also part of the nuclear family and should be included as part of our family values as Americans. I love my parents, all my siblings, and my adult son and daughters, and I hope you do as well.

3. Do you believe that we should give priority to family-based and employment based immigration over immigration that is based totally at random, such as the visa lottery program?

I favor giving priority to family-based and employment immigration over a system that is "totally random." We should remain open to some visas for those from countries that have been historically discriminated against under the U.S. immigration system.

RESPONSE TO POST-HEARING QUESTION FROM STUART ANDERSON, EXECUTIVE DIRECTOR, NATIONAL FOUNDATION FOR AMERICAN POLICY

Reply of Stuart Anderson to the questions of the Honorable Bob Goodlatte.

I believe that family-based and employment-based immigration should be given a higher priority than the Diversity visa lottery. I also believe that maintaining all current family-based and employment-based preference categories would be preferable to moving to the point system that was proposed in the Senate's immigration bill. A detailed analysis of the shortcomings of the point system proposed in the Senate is available in a report on the website of the National Foundation for American Policy at www.nfap.com.

○