AUTHENTICATED
U.S. GOVERNMENT
INFORMATION
GPO

RESPONSE BY TOYOTA AND NHTSA TO INCIDENTS OF SUDDEN UNINTENDED ACCELERATION

HEARING

BEFORE THE

SUBCOMMITTEE ON OVERSIGHT AND INVESTIGATIONS

OF THE

COMMITTEE ON ENERGY AND COMMERCE

HOUSE OF REPRESENTATIVES

ONE HUNDRED ELEVENTH CONGRESS

SECOND SESSION

FEBRUARY 23, 2010

Serial No. 111–96

Printed for the use of the Committee on Energy and Commerce

energycommerce.house.gov

RESPONSE BY TOYOTA AND NHTSA TO INCIDENTS OF SUDDEN UNINTENDED ACCELERATION

RESPONSE BY TOYOTA AND NHTSA TO INCIDENTS OF SUDDEN UNINTENDED ACCELERATION

HEARING

BEFORE THE

SUBCOMMITTEE ON OVERSIGHT AND INVESTIGATIONS

OF THE

COMMITTEE ON ENERGY AND COMMERCE

HOUSE OF REPRESENTATIVES

ONE HUNDRED ELEVENTH CONGRESS

SECOND SESSION

FEBRUARY 23, 2010

Serial No. 111–96

Printed for the use of the Committee on Energy and Commerce

energycommerce.house.gov

U.S. GOVERNMENT PRINTING OFFICE

76–008 WASHINGTON : 2012

For sale by the Superintendent of Documents, U.S. Government Printing Office
Internet: bookstore.gpo.gov Phone: toll free (866) 512–1800; DC area (202) 512–1800
Fax: (202) 512–2104 Mail: Stop IDCC, Washington, DC 20402–0001

COMMITTEE ON ENERGY AND COMMERCE

HENRY A. WAXMAN, California, *Chairman*

JOHN D. DINGELL, Michigan
Chairman Emeritus
EDWARD J. MARKEY, Massachusetts
RICK BOUCHER, Virginia
FRANK PALLONE, JR., New Jersey
BART GORDON, Tennessee
BOBBY L. RUSH, Illinois
ANNA G. ESHOO, California
BART STUPAK, Michigan
ELIOT L. ENGEL, New York
GENE GREEN, Texas
DIANA DEGETTE, Colorado
Vice Chairman
LOIS CAPPS, California
MICHAEL F. DOYLE, Pennsylvania
JANE HARMAN, California
TOM ALLEN, Maine
JANICE D. SCHAKOWSKY, Illinois
CHARLES A. GONZALEZ, Texas
JAY INSLEE, Washington
TAMMY BALDWIN, Wisconsin
MIKE ROSS, Arkansas
ANTHONY D. WEINER, New York
JIM MATHESON, Utah
G.K. BUTTERFIELD, North Carolina
CHARLIE MELANCON, Louisiana
JOHN BARROW, Georgia
BARON P. HILL, Indiana
DORIS O. MATSUI, California
DONNA M. CHRISTENSEN, Virgin Islands
KATHY CASTOR, Florida
JOHN P. SARBANES, Maryland
CHRISTOPHER S. MURPHY, Connecticut
ZACHARY T. SPACE, Ohio
JERRY MCNERNEY, California
BETTY SUTTON, Ohio
BRUCE L. BRALEY, Iowa
PETER WELCH, Vermont

JOE BARTON, Texas
Ranking Member
RALPH M. HALL, Texas
FRED UPTON, Michigan
CLIFF STEARNS, Florida
NATHAN DEAL, Georgia
ED WHITFIELD, Kentucky
JOHN SHIMKUS, Illinois
JOHN B. SHADEGG, Arizona
ROY BLUNT, Missouri
STEVE BUYER, Indiana
GEORGE RADANOVICH, California
JOSEPH R. PITTS, Pennsylvania
MARY BONO MACK, California
GREG WALDEN, Oregon
LEE TERRY, Nebraska
MIKE ROGERS, Michigan
SUE WILKINS MYRICK, North Carolina
JOHN SULLIVAN, Oklahoma
TIM MURPHY, Pennsylvania
MICHAEL C. BURGESS, Texas
MARSHA BLACKBURN, Tennessee
PHIL GINGREY, Georgia
STEVE SCALISE, Louisiana

SUBCOMMITTEE ON OVERSIGHT AND INVESTIGATIONS

BART STUPAK, Michigan, *Chairman*

BRUCE L. BRALEY, Iowa
Vice Chairman
EDWARD J. MARKEY, Massachusetts
DIANA DEGETTE, Colorado
MIKE DOYLE, Pennsylvania
JANICE D. SCHAKOWSKY, Illinois
MIKE ROSS, Arkansas
DONNA M. CHRISTENSEN, Virgin Islands
PETER WELCH, Vermont
GENE GREEN, Texas
BETTY SUTTON, Ohio
JOHN D. DINGELL, Michigan *(ex officio)*

GREG WALDEN, Oregon
Ranking Member
ED WHITFIELD, Kentucky
MIKE FERGUSON, New Jersey
TIM MURPHY, Pennsylvania
MICHAEL C. BURGESS, Texas

CONTENTS

	Page
Hon. Bart Stupak, a Representative in Congress from the State of Michigan, opening statement	1
Hon. Joe Barton, a Representative in Congress from the State of Texas, opening statement	4
Hon. Henry A. Waxman, a Representative in Congress from the State of California, opening statement	5
Hon. Michael C. Burgess, a Representative in Congress from the State of Texas, opening statement	7
Prepared statement	10
Hon. Marsha Blackburn, a Representative in Congress from the State of Tennessee, opening statement	16
Prepared statement	17
Hon. Bobby L. Rush, a Representative in Congress from the State of Illinois, opening statement	18
Hon. Phil Gingrey, a Representative in Congress from the State of Georgia, opening statement	19
Hon. Edward J. Markey, a Representative in Congress from the Commonwealth of Massachusetts, opening statement	20
Hon. John Sullivan, a Representative in Congress from the State of Oklahoma, opening statement	21
Hon. Diana DeGette, a Representative in Congress from the State of Colorado, opening statement	22
Hon. Donna M. Christensen, a Representative in Congress from the Virgin Islands, opening statement	22
Hon. Gene Green, a Representative in Congress from the State of Texas, opening statement	23
Hon. Betty Sutton, a Representative in Congress from the State of Ohio, prepared statement	25
Hon. Janice D. Schakowsky, a Representative in Congress from the State of Illinois, opening statement	26
Hon. Bruce L. Braley, a Representative in Congress from the State of Iowa, opening statement	27
Prepared statement	29
Hon. Peter Welch, a Representative in Congress from the State of Vermont, opening statement	33
Hon. Jerry McNerney, a Representative in Congress from the State of California, prepared statement	127

WITNESSES

Eddie and Rhonda Smith of Sevierville, Tennessee	34, 42
Prepared statement	38
Sean Kane, President of Safety Research & Strategies, Incorporated	43
Prepared statement	47
David Gilbert, Associate Professor of Automotive Technology at Southern Illinois University	52
Prepared statement	54
Answers to submitted questions	372
James E. Lentz, President and Chief Operating Officer, Toyota Motor Sales, USA, Inc	86
Prepared statement	89
Answers to submitted questions	376
Raymond H. LaHood, Secretary of Transportation, U.S. Department of Transportation	134
Prepared statement	137

Page

Raymond H. LaHood, Secretary of Transportation, U.S. Department of Transportation—Continued
Answers to submitted questions 396

SUBMITTED MATERIAL

Letter of February 23, 2010, from Exponent to the Committee 166
Report dated February 5, 2010, entitled Toyota Sudden Unintended Acceleration 168
Report dated February 21, 2010, entitled Toyota Electronic Throttle Control Investigation 353
Letter of February 21, 2010, from Neil Hannemann to the Committee 368

RESPONSE BY TOYOTA AND NHTSA TO INCIDENTS OF SUDDEN UNINTENDED ACCELERATION

TUESDAY, FEBRUARY 23, 2010

HOUSE OF REPRESENTATIVES,
SUBCOMMITTEE ON OVERSIGHT AND INVESTIGATIONS,
COMMITTEE ON ENERGY AND COMMERCE,
Washington, DC.

The subcommittee met, pursuant to call, at 11:02 a.m., in Room 2123, Rayburn House Office Building, Hon. Bart Stupak [chairman of the subcommittee] presiding.

Present: Representatives Stupak, Braley, Markey, DeGette, Doyle, Schakowsky, Ross, Christensen, Welch, Green, Sutton, Dingell (ex officio), Waxman (ex officio); Sullivan, Burgess, Blackburn, Gingrey, and Barton (ex officio).

Also Present: Representatives Gonzalez, Rush, Engel, Gordon, McNerney, Shimkus, Buyer, Whitfield, Terry, and Pitts.

Staff Present: Phil Barnett, Staff Director, Kristin Amerling, Chief Counsel; Bruce Wolpe, Senior Advisor; Timothy Robinson, Counsel; Anna Laitin, Professional Staff Member; Dave Leviss, Chief Oversight Counsel; Anne Tindall, Counsel; Scott Schloegel, Investigator; Ali Neubauer, Special Assistant; Derrick Franklin, Detailee; Karen Lightfoot, Communications Director, Senior Policy Advisor; Elizabeth Letter, Special Assistant; Lindsay Vidal, Special Assistant; Earley Green, Chief Clerk; Jen Berenholz, Deputy Clerk; Mitchell Smiley, Special Assistant; Matt Eisenberg, Staff Assistant; Alan Slobodin, Chief Minority Counsel; Kevin Kohl, Minority Professional Staff; and Garrett Golding, Minority Legislative Analyst.

OPENING STATEMENT OF HON. BART STUPAK, A REPRESENTATIVE IN CONGRESS FROM THE STATE OF MICHIGAN

Mr. STUPAK. This meeting will come to order.

Today, we have a hearing titled Response by Toyota and NHTSA to Incidents of Sudden Unintended Acceleration.

We have a number of Members who are present for this hearing who are not members of the subcommittee but are members of the full committee. We welcome them, and I note that they will be allowed to submit written statements for the record but will not be able to deliver opening statements.

In addition, after all subcommittee members complete their questioning, full committee members will be allowed to ask questions. Members who are not on the subcommittee or the full committee

are welcome to observe, but they will not be permitted to give a verbal opening statement or ask questions due to time constraints.

I ask unanimous consent that Congressman Burgess be allowed to serve as ranking member for today's hearing.

Without objection, the request is accepted.

The chairman, ranking member, and chairman emeritus will now be recognized for a 5-minute opening statement. Other members of the subcommittee will be recognized for 3-minute opening statements. And Mr. Rush, the chairman of the CPTC Subcommittee, will also be allowed to give an opening statement along with the ranking member, if they so desire. So we will begin with the opening statements. I will begin.

Ten years ago, this committee investigated the Firestone tire recalls which caused the deaths of dozens of people and expressed vulnerabilities in the government's oversight and recall authority. In response, Congress quickly passed the THREAT Act which was intended to provide enhanced authority for the National Highway Traffic Safety Administration to gather and analyze data from automobile manufacturers and provide an early warning system for catastrophic defects. Now, a decade later, we face a serious auto safety problem that calls into question whether the THREAT Act is achieving the purposes we intended.

Today's hearing will examine whether Toyota Motor Corporation and NHTSA acted in a timely fashion to address countless complaints of sudden unintended acceleration in Toyota vehicles. Sudden unintended acceleration describes a broad range of events in which a vehicle accelerates rapidly and a driver is unable to immediately slow down or stop the vehicle.

Over the past several months, Toyota Motor Corporation has issued two major recalls for defects associated with accelerator problems in eight popular models. The first recall, announced in October of 2009, addressed floor mats that can jam against the gas pedal, causing it to become trapped in a full throttle position. Toyota eventually opened this floor mat recall to 4.26 million vehicles, and just last month Toyota announced another recall of gas pedals that can stick or return slowly.

Toyota's leadership has been ambiguous about whether these two recalls fully account for and address the problem of sudden unintended acceleration. Thousands of Toyota owners whose cars were not subject to either recall have reported to the company that their vehicles suddenly surged or accelerated to high speeds. A staff analysis of documents Toyota provided to the committee shows that roughly 70 percent of the sudden unintended acceleration events recorded in Toyota's own customer call database involved vehicles that are not covered by the a floor mat or sticky pedal recalls. The fixes Toyota has advertised for this problem do not provide much assurance to these drivers.

Our investigation has shown that Toyota has repeatedly dismissed the possibility of electronic failures could be responsible for incidents of sudden unintended acceleration. At the same time, Toyota provided software upgrades to certain vehicles to ensure that in instances where the gas and brakes were both depressed the brakes will override the gas. It seems like this software upgrade provides important safety protection, but we are left to ask,

what will Toyota do for owners of its cars that cannot receive the safety upgrade?

Equally troubling is that officials at NHTSA appear to have bought into Toyota's explanation of these events. In closing investigations and in briefings of committee staff, NHTSA has repeated Toyota 's insistence that sudden unintended acceleration is caused by human error or limited mechanical problems, rather than problems in the electronic system. NHTSA made this determination without having electrical or software engineers review the problem.

One of our witnesses today will tell us how a NHTSA investigator sent to inspect her vehicle, "seemed to arrive with a preconceived idea to sell to us that it was a floor mat problem," end of quote. This begs the question of whether NHTSA is too cozy with the industry they oversee or whether they are simply stuck in a mechanical mind-set, rather than evolving to keep up with the new generation of electronics and computer-run components.

In an attempt to quell concerns that sudden unintended acceleration occurs, Toyota attorneys commissioned a study titled, Testing and Analysis of Toyota and Lexus Vehicles and Components for Concerns Related to Unintended Acceleration by a company called Exponent. Toyota has presented this preliminary report to prove that the electronic system cannot cause sudden unintended acceleration.

However, this committee requested an independent expert assessment of the Exponent study; and these experts identified numerous shortcomings, including the review did not follow sound scientific method; major categories of testing such as electromagnetic interference and radio frequency interference were not addressed; only one of the seven vehicles used in the study was on the recall list; and the study did not examine a single vehicle that had experienced sudden unintended acceleration.

It is clear that the flawed Exponent study is nowhere near adequate for a valid scientific review.

Toyota owes it to its customers, the American people, and government regulators to complete a comprehensive and scientifically sound review of their electronic system.

One individual who has taken a close look at Toyota's electronic gas pedals is Dr. David Gilbert at Southern Illinois University in Carbondale, Illinois. Dr. Gilbert will release his interim report showing how he was able to short-circuit the electronic gas pedal and mimic an unintended acceleration incident without triggering any diagnostic trouble codes in the vehicle's computer. Dr. Gilbert's report is the first study of this kind, and we are fortunate to have him and Mr. Sean Kane here to explain it.

In summary, what we have found is quite troubling. Toyota all but ignored pleas from consumers to examine sudden unintended acceleration events. They boast in a briefing of saving Toyota $100 million by negotiating a limited recall. They claim that they first became aware of sticking pedals in late October of 2009 when, in fact, they had received numerous complaints many months and years earlier. They misled the American public by saying that they and other independent sources have thoroughly analyzed the electronic system and eliminated electronics as a possible cause of sudden unintended acceleration when, in fact, the only such review

was a flawed study conducted by a company retained by Toyota's lawyers.

Toyota and NHTSA, for that matter, have a lot of explaining to do to the American people, to Toyota owners and dealers. I look forward to an informational and productive hearing.

I next yield to the gentleman, Mr. Barton from Texas, for an opening statement.

Mr. BARTON. Thank you, Chairman Stupak.

This is a little housekeeping before I give the opening statement.

As you know, the ranking member on our side on this subcommittee is Congressman Greg Walden. He has stepped off the committee so that we can put Parker Griffith of Alabama on the committee. Therefore, for today's hearing, we officially don't have a ranking member. I have asked Congressman Burgess if he would do that today. But to give the opening statement, it will be myself.

Later this week, Chairman Waxman—I think—has indicated that he will have a regular business committee meeting in which we will formally replace Mr. Walden. So that is why I am here.

Mr. STUPAK. But for today's hearing, Mr. Burgess will be ranking?

OPENING STATEMENT OF HON. JOE BARTON, A REPRESENTATIVE IN CONGRESS FROM THE STATE OF TEXAS

Mr. BARTON. Yes, sir, as soon as I give this opening statement.

Mr. Chairman, I am going to put my opening statement in the record in its entirety, so I am going to speak extemporaneously.

When the Republicans were in the majority, we held similar hearings on Ford and Firestone tires. So I felt, as the ranking member of the full committee when Mr. Waxman and you approached me about these hearings, that it was only fair that the Republicans support this investigation. The American people do have a right to know, Mr. Chairman, and this subcommittee has always—regardless of which party controlled the Congress and regardless of which member of this committee chaired this subcommittee—has got a great record of getting the facts on the table. And I will say on the record, Mr. Chairman, that you are one of the best at getting the facts on the record.

Having said that, we do want to have an open mind on what the problem is.

I was stunned to learn yesterday that—you know, it shows how long it has been since I have worked on a car. But I was under the impression that the steering mechanism and the fuel acceleration mechanism was like it was years ago, that it was mechanically linked. It is not. It is all electronic now. When you push that gas pedal, engineers actually have gone out of their way to create the feel of when it was linked—to show how old I am—to the carburetor, but it is really an electronic signal. There is no mechanical linkage. They actually create a spring-loaded system under the gas pedal to make it feel like, when you push down on the pedal, there is a linkage that is going into the engine, that is going up to the fuel injection system, the carburetor and making it work. It is all electronic.

The recall that Toyota was undertaking and the actual changes, the modifications, what they are doing is they are going in and

shaving part of the gas pedal off at the bottom, and then they are putting a metal washer insert behind the pedal so that it feels a little differently. They have exhaustively looked at the computer programs and electronics to see if there is some computer malfunction. So far, they can't find it.

Now, maybe there is. And like the study you have indicated, Mr. Chairman, maybe there is something in their program that is wrong.

But I was under the assumption, as an industrial engineer, that it was still a mechanical system and there was something wrong with their design or something wrong with their linkage system or something wrong with their connection. Well, that is all electronic.

And what we need to do, Mr. Chairman—I don't believe that we should—and I am not saying that you are attempting to do this—that we should go on a witch hunt. We should actually try to find out in the true and best sense of protecting the American people that, if there is a problem, what it is. If there is a problem, what Toyota is going to do about it. And if we do that, the American people will be well served.

What we don't want to do, in my opinion, Mr. Chairman, is just assume automatically that Toyota has done something wrong and is trying to cover it up. Now maybe they have. If that comes out in these documents and in the testimony, I hope the Congress will come down on Toyota very forcefully. But if they haven't, you know, the people that I talk to have worked in the automotive industry for 30 years or more, and they have got absolutely no interest in covering up a problem that kills people, that hurts people, that endangers people's lives. But it appears to be that, unless there is some electronic problem, it is possible that it could just be too many people putting too many floor mats in their cars.

And I know that sounds silly, and it would seem incredulous to stipulate that that might be the problem. But, based on the observation of the 16 million vehicles, I believe, that Toyota has investigated or have records on, they have had a handful, maybe a dozen, that have had some problems. So we need to find the facts, and I know, Mr. Chairman, you and Mr. Waxman are great at finding the facts, and myself and the Republicans on the committee are going to help you.

So, with that, I would yield back.

Mr. STUPAK. Thank you, Mr. Barton. It has been a cooperative effort. I look forward to continuing to work with you on this matter.

A statement from the chairman of the full committee, Mr. Waxman, sir.

OPENING STATEMENT OF HON. HENRY A. WAXMAN, A REPRESENTATIVE IN CONGRESS FROM THE STATE OF CALIFORNIA

Mr. WAXMAN. Chairman Stupak, I want to thank you for holding today's hearing on reports of sudden unintended acceleration in Toyota vehicles.

I am a great admirer of Toyota. Toyota makes good cars. I have driven one pleasurably and safely for years, and the company has been a strong corporate citizen. The Prius is a breakthrough vehicle that is making a crucial contribution to our environment and

energy security. Perhaps that is why I am so disappointed in the company's response to reports of Toyota vehicles racing out of control too often with fatal consequences.

Over the last decade, cars have become moving computers. They have dozens of microprocessors and millions of lines of code. This development has brought many improvements in vehicle performance and vehicle safety. Airbags are triggered by electronic controls. Electronic vehicle stability controls keep cars from swerving out of control, and fuel efficiency has increased.

Like any advancement, the increased reliance on electronics can bring new risks, and these need to be carefully examined. But this did not happen.

In preparation for this hearing, the committee analyzed over 100,000 pages of documents from Toyota and the National Highway Traffic Safety Administration. These documents show that both Toyota and NHTSA have received thousands of complaints of runaway Toyota vehicles, and they show that these complaints increased after the introduction of electronic throttle controls.

But what is most significant is what is missing from the documents. There is no evidence that Toyota or the government's agency, NHTSA, took a serious look at the possibility that electronic defects could be causing the problem. Toyota did not initiate a study into possible electronic effects until just 2 months ago, and NHTSA still does not have an electrical or software engineer on staff.

Our review indicates that Toyota received as many as 2,600 complaints of runaway vehicles through its telephone hotline alone. Over 700 of these incidents resulted in accidents. Toyota had three responses: first, blame the driver; second, blame the floor mat; third, blame a sticky gas pedal. And NHTSA, without doing any meaningful independent review, accepted Toyota's explanations.

Today, we will hear from Toyota's U.S. President, Jim Lentz, who will testify; and he has cooperated with our investigation, which I very much appreciate. He has said that Toyota was "very confident that the fix in place is going to stop what's going on." As we will learn today, that seems unlikely.

On our first panel, we are going to hear from Rhonda and Eddie Smith, who will describe Rhonda's harrowing account of driving a runaway Toyota vehicle. Their account does not sound like a driver error, a floor mat problem, or a sticky pedal. It sounds like an electronic defect.

On the same panel, we are going to hear from two automotive experts, Sean Kane and David Gilbert. They have been trying to identify possible electronic defects in Toyota vehicles. I am not an electronics expert, but if what they say is true, Toyota vehicles have a serious flaw in their electronic control systems that leaves them vulnerable to sudden unintended acceleration.

One question we will ask today is, why didn't Toyota and the government agency do the kind of investigation that Mr. Kane and Dr. Gilbert have done? Toyota failed its customers, and the government neglected its responsibilities. Today we will try to find out why.

Given all that Toyota has achieved over the past 50 years, it would be wrong for Toyota to be permanently impaired as a result of the safety failures that have occurred. Toyota is a great com-

pany, and I hope it will have a great future. But fundamental reforms are needed in Toyota's leadership. Consumer complaints need to be taken seriously. The possibility of electronic defects must be actively investigated, and safety must start coming first.

Fundamental reforms are also needed at NHTSA. The agency lacked the expertise and resources to critically assess Toyota's insistence that its vehicles could not fail.

Ultimately, I believe that addressing this problem will require legislation. Carmakers have entered the electronics era, but NHTSA seems stuck in a mechanical mind-set. We need to make sure the Federal safety agency has the tools and resources it needs to ensure the safety of the electronic controls and onboard computers that run today's automobiles.

Again, I thank you, Mr. Chairman, for holding this hearing. I look forward to hearing from our witnesses so that, as a result of this hearing, we can take a constructive step forward to correct this problem and make sure that future problems that may even affect people's lives are dealt with so that they will not occur.

I yield back my time.

Mr. STUPAK. Thank you, Mr. Chairman.

Next, we will hear from the ranking member, Mr. Burgess of Texas, for 5 minutes, please.

OPENING STATEMENT OF HON. MICHAEL C. BURGESS, A REPRESENTATIVE IN CONGRESS FROM THE STATE OF TEXAS

Mr. BURGESS. Thank you, Mr. Chairman, and I thank you and Chairman Waxman for convening this important hearing.

I thank our witnesses for being here. Thank you to the Smiths from Tennessee for sharing your compelling story with us today.

So far, this committee has received thousands of documents from both Toyota Motor Company and the National Highway Traffic Safety Administration, showing the complaints they have received over the years and their investigations into those complaints. While this committee's investigation is ongoing, it is clear that Toyota and the National Highway Traffic Safety Administration received numerous complaints about sudden unintended acceleration in Toyota vehicles.

Lately, you can't pick up the newspaper without reading a new announcement about a problem with a Toyota—Lexus, Camry, Prius, and now Corolla. In 4 short weeks, we heard in rapid succession that there was a problem with floor mats, then the pedals got stuck in the floor mat, that the pedals themselves were sticky and stayed depressed even after the driver took his or her foot off the gas.

Many of us are surprised at the swiftness, the breadth, and the depth of this recall by a company that, really, we are all familiar with for having had a good reputation as a car company that makes quality, safe products; and many owners are very loyal to the brand. In fact, last year, Toyota was the number one in auto sales in the United States. Corolla is the number one seller worldwide.

Unfortunately, the issue at the heart of this hearing is not about loyalty. It is the battle between economics and safety, and safety must always come first. The economics of this debate says that

Toyota made more money last year in the recession than any other automaker, over $800 million; and Toyota's infrastructure is built on 1,500 auto dealers in this country and numerous manufacturing plants, all of which provide 200,000 needed jobs in this recession.

In fact, Mr. Chairman, I have a letter from my Governor about the Toyota plant in San Anthony, Texas; and I will submit that for the record.

I am uncomfortably aware of the fact that this government, through the Troubled Asset Relief Program, has given $64 billion to prop up General Motors and Chrysler. This is an inherent conflict of interest, and it has only grown since last month when the General Accountability Office said that the American taxpayer would lose over $30 billion of their investment into those two companies. So we really are not just a disinterested panel of individual car owners and stockholders. This is why we need to get out of the business of bailing out business.

But, again, nothing should surpass the safety of the American consumer, which is why we are here. A document created by the National Highway Traffic Safety Administration's staffer during the course of the 2004 investigation into sudden acceleration shows a spike in these problems starting in 2002, the year that Toyota put in electronic throttle control in some of its cars. We have also learned that State Farm noted an increase in claims related to unintended acceleration as early as 2004 and shared its claims data with the agency in 2006.

Yet here we are, 4 years later, and there isn't a conclusive answer as to what caused the unintended acceleration. Is it Toyota's fault? Is it the fault of the parts dealer, the operator?

These questions, of course, are cold comfort for the families who lost loved ones in accidents following an acceleration event, and they deserve answers. But even as we work now to figure out as soon as we can what happened it is important that we get the full story and the correct answer so we can fix the problems going forward.

We know that there were signals that Toyota and the National Highway Traffic Safety Administration both received in the form of driver complaints and warranty claims. We know NHTSA attempted to look into the issue; and, for reasons I hope that Secretary LaHood will explain today, NHTSA did not find an electrical problem with Toyota's electronic throttle control.

We also note Toyota did lots of testing and field investigations of these events and concluded that the problems were floor mats and sticky pedals, both problems that can be termed mechanical in nature. We do not yet have a good handle on what electrical test Toyota did on its cars during preproduction. We do not know how Toyota reached a conclusion that cars were not having electrical problems. We know that Toyota has recently hired an outside firm to run down these problems, but did Toyota do anything as these complaints were coming in? And, if not, why not?

I hope we start getting a better idea of Toyota's response to these questions today and a fuller picture of what is wrong with these cars. Toyota's reputation for safety and reliability has been its stock in trade. I would say to Mr. Lentz, it is why people buy your cars and drive their families in them. It is why I own a Prius. We

hope you can explain today why Toyota is confident that floor mats and sticky pedals have caused some of these events and what you are doing to figure out the causes of the other unintended acceleration events.

I also welcome Secretary LaHood. He has always worked in a bipartisan manner. I would like to publicly thank him for coming to my district last fall for a transportation event. His courtesy is always appreciated.

But I do look forward to hearing Mr. LaHood explain why it seems that NHTSA has been engaging in a sudden acceleration of Toyota-related inquiries. Why the sudden ramp-up? What was NHTSA doing for the last 5 years as the drivers called the agency to complain about runaway cars? Were the Toyota complaints that NHTSA was seeing different in nature or number from the complaints related to other manufacturers? And I do hope we can get some insight into how NHTSA investigated these complaints.

Thank you again, Chairman Waxman, Chairman Stupak, for convening this hearing. I know this will be the start of a long and multilayered process to discover the truth and what initiated the recalls and what we do going forward to fix the problem for the American consumer.

[The prepared statement of Mr. Burgess follows:]

Opening Statement of the Honorable Michael C. Burgess

Subcommittee on Oversight and Investigations

Hearing on

"Response by Toyota and NHTSA to Incidents of Sudden Unintended Acceleration"

February 23, 2010

Thank you Chairman Stupak and Chairman Waxman for convening this important hearing on sudden unintended acceleration in Toyota cars.

So far, this Committee has received thousands of documents from Toyota and NHTSA, showing the complaints they have received over the years and their investigations of those complaints. While this Committee's investigation is ongoing, it is clear that Toyota and NHTSA received numerous complaints about sudden unintended acceleration in Toyota vehicles.

And lately, you can't pick up a paper without reading a new announcement about a problem with a Toyota car. Lexus; Camry; Prius; and now Corolla. In four short weeks, we heard in rapid succession there was a problem with floor mats, and then the pedal becoming stuck

in the floor mat, and then there were stories about "sticky pedals" that stayed depressed even after a driver took his foot off the gas.

Many of us are surprised at the swiftness, breadth and depth of this recall by a company who we are all familiar with for having had the reputation as a good car company who makes quality, safe products, and many owners are very loyal to the brand. In fact, last year Toyota was number one in auto sales in the United States.

Unfortunately, the issue at the heart of this hearing is not just about loyalty. It's a battle between economics and safety, with safety always foremost.

The economics of this debate says that Toyota made more money last year, in a recession, than any other automaker. Over $800 million. And Toyota's infrastructure is built upon 1,500 auto dealers in this country and numerous manufacturing plants, all of which provide 200,000 needed jobs in this recession.

And I am uncomfortably aware of the fact that this government, through TARP, has given $64.2 billion dollars to prop up General Motors and Chrysler. This inherent conflict of interest has only grown since last month the GAO said that the American taxpayer would lose

$30.4 billion dollars of their so-called investment into GM and Chrysler. So really we are not just a disinterested panel of individual car owners and individual stockholders. This is why we need to get out of the business of bailing out business.

But again nothing should surpass the safety of the American consumer, which is why we are here. We need to know who knew what and when?

A document created by a NHTSA staffer during the course of a 2004 investigation into sudden acceleration shows a spike in these problems starting in 2002, the year Toyota put Electronic Throttle Control in some of its cars. We have also learned that State Farm noted an increase in claims related to unintended acceleration as early as 2004, and shared some of its claims data with the agency in 2006.

Yet four years later, there isn't a conclusive answer to why there is unintended acceleration. Is it the fault of Toyota? Is it the fault of the parts dealer? Or is it the fault of the individual users? These questions are cold comfort for the families who lost loved ones in accidents following an acceleration event and ***they deserve answers***.

But even as we work now to figure out as soon as we can what happened, it is important that they get the full story, ***and a right answer***.

At best, right now, we have half the story.

We know there were signals that Toyota and NHTSA both received in the form of driver complaints and warranty claims. We know NHTSA attempted to look into the issue, and for reasons I hope Secretary LaHood will explain today, NHTSA did not find an electrical problem with the Toyota's Electronic Throttle Control.

We also know Toyota did lots of testing and field investigations of these events and concluded that the problems were floor mats and sticky pedals, both problems that can be termed "mechanical" in nature. We do not yet have a good handle on what electrical tests Toyota did on its cars during pre-production. We do not know how Toyota reached a conclusion that that the cars were not having electrical problems. We know that Toyota has recently hired an outside firm to run down these problems, but did Toyota do anything as these complaints were coming in? And if not, why not?

I hope we start getting a better idea of Toyota's response to these questions today and a fuller picture of what exactly is wrong with these

cars. Toyota's reputation for safety and reliability has been its stock-in-trade. Mr. Lentz, it is why people buy your cars and drive their families in them. It's why I own a Prius. We hope you can explain today why Toyota is confident that floor mats and sticky pedals have caused some of these events, and what you are doing to figure out the causes of other unintended acceleration events.

I also welcome Secretary LaHood. Secretary LaHood has always worked in a bipartisan manner and I would like to publicly thank him again for coming to my Transportation summit in the District. I couldn't even get the Transportation Secretary during the Bush Administration so this courtesy is particularly appreciated.

I look forward to Mr. LaHood explaining why it seems that NHTSA has been engaging in a sudden acceleration of Toyota-related inquiries. Why the sudden ramp-up? What was NHTSA doing for the last five years as the drivers called the agency to complain about run-away cars? Were the Toyota complaints NHTSA was seeing different in nature or number than the complaints related to other manufacturers? I hope you can give us some insight about how NHTSA investigated these complaints.

Thank you, again, Chairman Waxman and Chairman Stupak for convening this hearing. I know today's hearing will be the start of a long and multi-layered process to discover the truth of these recalls. I look forward to getting all my questions answered.

Mr. STUPAK. Thank you, Mr. Burgess.

Mr. Dingell for an opening statement, please.

Mr. DINGELL. Mr. Chairman, I commend you for this hearing. I thank you for your efforts.

I will be asking yes-or-no questions today, and I hope no one will perceive this as discourteous or mean-spirited. I know you will conduct a fair hearing. And I ask unanimous consent to insert my full statement in the record because I would rather use the time for questioning. Thank you.

Mr. STUPAK. Thank you, Mr. Dingell.

Mrs. Blackburn for an opening statement, please.

OPENING STATEMENT OF HON. MARSHA BLACKBURN, A REPRESENTATIVE IN CONGRESS FROM THE STATE OF TENNESSEE

Mrs. BLACKBURN. Thank you, Mr. Chairman.

First, I want to welcome Eddie and Rhonda Smith, who are from Tennessee; and I want to thank them for taking the time to come up today. We are appreciative of that.

This hearing is of utmost importance, but I am starting to become a little bit concerned about the tone that is surrounding it. This should not be a trial but rather a hearing to get to the bottom of some very important consumer safety issues, and I hope that that is how we will proceed.

Every day we are hearing a combination of new information and, unfortunately, some new misinformation that clouds the debate, and my hope is that that misinformation is not being circulated for political purposes or to be hurtful.

This is a very, very serious issue involving the loss of lives. In addition, it has resulted in the loss of jobs; and the loss of thousands of paychecks are being sacrificed, also.

Also, again, Mr. Chairman, let me say that this is too important an issue for us to play around with or to play politics with. And it is not a new issue. While I feel that many Members of this body and, unfortunately, this committee are inserting themselves at the 11th hour, this is something that I have been working on for years.

I have three letters that I sent in 2007 on this issue. I sent one to Chairman Dingell, another to Toyota, and another one to NHTSA, encouraging and urging this committee and the administration to look at the issue of unexpected acceleration in the Toyota Tacoma.

In conclusion, I would just ask that we all listen to our expert panelists today in an effort to find out the truth and to draw reasonable conclusions as to how to best move forward to assess the lessons learned and to be certain that mistakes of the past are not repeated in the future. To do anything else would be irresponsible at a time when there is so much on the line.

Thank you, Mr. Chairman; and I ask unanimous consent to submit my letters for the record.

Mr. STUPAK. Without objection, your letters will be submitted for the record.

[The information was unavailable at the time of printing.]

[The prepared statement of Mrs. Blackburn follows:]

The Honorable Marsha Blackburn (TN-07)
Committee on Energy and Commerce
Subcommittee on Communications, Technology, and the Internet
Hearing: "Response by Toyota and NHTSA to Incidents of Sudden Unintended Acceleration"
Opening Statement
February 23, 2010

Thank you Mr. Chairman. First, I would like to welcome Eddie and Rhonda Smith and thank you for coming up from Tennessee to be with us today.

This hearing is of the utmost importance, but I am starting to become bothered by the tone. This should not be a trial, but rather a hearing to get to the bottom of some very important consumer safety issues.

Each day we hear new misinformation that unfortunately clouds the debate. My hope is that this misinformation is not being circulated for political purposes.

This is a serious issue involving the loss of lives. In addition, it has resulted in the loss of jobs and thousands of paychecks being sacrificed. Again Mr. Chairman, let me say that this is too important an issue to play politics with.

This is not a new issue. While I feel like many Members of this body, and unfortunately this Committee, are inserting themselves at the 11th hour, this is something I've been talking about for years. I have a couple letters I will submit for the record from 2007 that I sent Chairman Dingell urging this Committee and the Administration to look into the issue of unexpected acceleration in the Toyota Tacoma.

In conclusion, I would just ask that we all listen to our expert panelists today in an effort to find out the truth and draw reasonable conclusions as to how to best move forward to assess the lessons learned and be certain mistakes are not repeated. To do anything else would be irresponsible at a time when so much is on the line.

Mr. STUPAK. By unanimous consent, I am going to ask Chairman Rush, who is chairman of the Consumer Protection Subcommittee who has jurisdiction over NHTSA, to give an opening statement at this time.

OPENING STATEMENT OF HON. BOBBY L. RUSH, A REPRESENTATIVE IN CONGRESS FROM THE STATE OF ILLINOIS

Mr. RUSH. Thank you, Mr. Chairman. Mr. Chairman, I really appreciate you recognizing me, although I am not a member of this subcommittee, but I do have an opening statement.

Currently, there are more than 205 million licensed motorists in the United States. And as our families and workforce become increasingly mobile, our society has, likewise, become more dependent on the so-called smartness features, energy efficiency factors, and the safety of our automobiles. Understanding this reality all too well, automobile dealers and makers, especially manufacturers of the high quality that Toyota has historically represented, basically brag in all sorts of slick advertising that their vehicles are the biggest, the baddest, and the boldest and, indeed, the safest car on the road.

So what happened to Toyota? Hear me when I say that I am profoundly discomfited and disturbed by the findings of our committee staff.

My concerns, Mr. Chairman, go far beyond Toyota's safety practices and recall decisions. They stand to the National Highway Traffic Safety Administration's apparent sluggishness in reinventing itself. It appears as if NHTSA failed to assign an appropriate mixture of staff and resources to keep up with the evolving and changing auto design technology, especially with respect to increased computerization.

I am adamant about getting to the bottom of the causes for sudden unintended acceleration in Toyota's fleet of passenger vehicles. As chairman of the Commerce, Trade, and Consumer Protection Subcommittee, I will be conducting a separate hearing in March to look into further NHTSA resources, staffing, and management philosophies as part of that agency's reauthorization.

Mr. Chairman, my sympathies and condolences go out to these families who have lost loved ones and certainly those consumers who have sustained grave injuries in crashes and accidents involving faulty Toyota and Lexus automobiles. I also extend these same sentiments to any automobile driver on the highways and streets and byways of our Nation who had the misfortune of encountering one of these faulty vehicles.

The fact is that when these motorists and passengers took the simple routine step of getting into their cars, they had no idea that their entrusted vehicles had the potential to become literally killing machines. This is beyond the expectations, and this is totally unacceptable.

I, along with millions of Americans, will be paying close attention to the answers given here today as well as to their testimony before other congressional committees today and in the future. Quite frankly, if some of the alleged behavior and failure to act that I have read in the media turns out to be true, then Toyota is perhaps driving down the road to an inquiry by the Justice Department.

Mr. Chairman, I promise all motorists, passengers, and pedestrians that my subcommittee will do everything in its power to restore confidence in NHTSA; and I will also work to ensure that affected Toyota and Lexus owners have full and immediate recourse to whatever equipment they need to remedy these safety defects. My hope is that consumers will once again have peace of mind when they turn on their vehicles and, yes, when they apply their brakes.

Thank you, Mr. Chairman; and I appreciate this hearing and opportunity to provide testimony at the hearing.

Mr. STUPAK. Thank you, Mr. Rush.

Mr. Gingrey for an opening statement.

OPENING STATEMENT OF HON. PHIL GINGREY, A REPRESENTATIVE IN CONGRESS FROM THE STATE OF GEORGIA

Mr. GINGREY. Thank you, Mr. Chairman.

I appreciate this opportunity to offer a few opening remarks, and I certainly look forward to listening to the testimony of our witnesses as we seek to understand the full scope and impact of sudden unintended acceleration.

While I believe that this subcommittee has a responsibility and a duty to thoroughly investigate this matter, including the responses by Toyota and by the National Highway Traffic Safety Administration, NHTSA, I would like to echo the concerns of others on the subcommittee that more could have been done in preparation for the hearing, even if it required a little bit more time to thoroughly vet a full range of witnesses, review over 70,000 pages of documents, and more deeply look into the underlying complex mechanical and electronic issues. Certainly we have an obligation to investigate potential threats, but we also have an obligation to get the whole truth to apply wisdom in our deliberations.

Additionally, I know some have expressed concern at the possibility that since the Federal Government now has a vested interest in some of our domestic auto manufacturers it may have some incentive to highlight potential flaws with competing manufacturers. While I hope and I believe this is not the case, just because I am paranoid doesn't mean somebody isn't out to get me. We have to be cognizant of perception, especially in this post-bailout world where the Federal Government has already placed itself in the business of picking economic winners and losers.

Nonetheless, our first and foremost obligation is to the safety and security of the American people; and if there is a problem here that can jeopardize people's safety and lives, we must identify it, understand it, and assure that it is addressed and it doesn't happen again. So I look forward, along with my colleagues, to listen to and very carefully consider the testimony of our witness as we seek to get to the root of this issue.

Mr. Chairman, I thank you; and I yield back.

Mr. STUPAK. Thank you, Mr. Gingrey.

Mr. Markey for an opening statement, 3 minutes, please.

OPENING STATEMENT OF HON. EDWARD J. MARKEY, A REPRESENTATIVE IN CONGRESS FROM THE COMMONWEALTH OF MASSACHUSETTS

Mr. MARKEY. Thank you, Mr. Chairman, very much.

Like millions of Americans, I drive a Toyota, a Camry hybrid that has thus far not been recalled. Like millions of Americans, one of the reasons that I purchased a Toyota in the first place was its stellar reputation for safe, reliable, and fuel-efficient vehicles. And like millions of Americans, I am troubled by the series of revelations that have led us to today's hearing; and, as the recall continues, I also find myself wondering what went so wrong.

The October 2009 recall of more than 4 million vehicles due to floor mats that were entrapping accelerator pedals raises troubling questions about what Toyota knew and when they knew it. While the government seemed to have first started to investigate this problem in 2007, I have learned of a Lexus recall undertaken by Toyota in the United Kingdom in the year 2000 because—and I quote—"there is a possibility that the driver's side carpet mat may rotate around the central fixing and interfere with the operation of the accelerator pedal."

And then in Canada in 2003, Toyota Celicas were recalled because "the driver's floor mat may slide along the interior floor carpet when pressure is applied to the mat by getting in and out of the vehicle. As a result, the floor mat may come into contact and interfere with the accelerator pedal."

If Toyota first learned that this could happen 10 years ago in the U.K. and then again in Canada 7 years ago, why didn't it do something before additional fatalities and other serious accidents occurred?

Toyota's response to increased scrutiny of its safety record leaves much to be desired. In recent days, we have learned of internal documents that cite Toyota's success at limiting the outcome of the government's safety investigations which reportedly saved $100 million. Saving money should not come at the expense of saving lives.

And, finally, many safety experts who have reviewed complaints regarding sudden acceleration in Toyota vehicles do not believe that floor mats and sticky pedals can fully account for all of the complaints. Some have speculated that there may be more problems, particularly in the areas of the vehicles' electronic controls.

While Toyota asserts that its outside experts found nothing wrong with their cars' electronics, those tests were based on incomplete examinations of only six vehicles. Clearly, much more must be done. The question is whether the problem with these vehicles is due to how you put your boot on the gas pedal or whether it is because Toyota needs to reboot the electronic software in its cars. That is what this hearing will be all about, and that is what the reforms will be that we ultimately pass as legislation.

I thank you, Mr. Chairman.

Mr. STUPAK. Thank you, Mr. Markey.

Mr. Sullivan for an opening statement, 3 minutes, please.

OPENING STATEMENT OF HON. JOHN SULLIVAN, A REPRESENTATIVE IN CONGRESS FROM THE STATE OF OKLAHOMA

Mr. SULLIVAN. Thank you.

I first want to thank Chairman Stupak and Ranking Member Burgess for holding this hearing. I am pleased to be a part of this important discussion as consumer safety and in this case in particular auto safety is extremely important to our Nation for many different reasons.

With well over 250 million passenger vehicles on the roads, safety must remain our number one priority; and statistical information indicates that we are meeting that goal. Over the last 50 years, significant technological advancements in the design and construction of automobiles and reasonable Federal regulatory initiatives have increased overall road and vehicle safety. As a result, fatalities and serious injuries resulting from motor vehicle crashes in the U.S. are at the lowest level in 49 years, despite constant growth in licensed drivers and registered vehicles.

Over the past week, I had the privilege of visiting and speaking with a Toyota dealer, Jim Norton, in my district and saw some of these problems and the remedies firsthand.

While vehicle safety must remain our goal, I think it is important to hear all sides of the story, look at all available data, and examine the entire process before we jump to any conclusions at the expense of one manufacturer and potentially do more harm than good by misleading the consumer with presumptions based on unfinished studies.

Thank you in advance to our panel before us, and it is my hope that our discussions here today do what it is meant to do by shedding light on this situation so that we can maintain the U.S. position as the world's leader in auto safety.

I yield back my time.

Mr. STUPAK. Thank you, Mr. Sullivan.

On this side, Mr. Doyle for an opening statement.

Mr. DOYLE. Thank you, Mr. Chairman. I will be very brief.

Mr. Chairman, this investigation is not intended to attack any one person or one company. This investigation is to see if the cars we drive are safe. It is to help us determine whether car manufacturers have done all they can do to ensure our safety, and it is to determine whether the regulators did all they could to double-check their work. That should be the focus of this investigation, and I know we have three panels, and I look forward to hearing from them.

Thank you.

Mr. STUPAK. On this side, we have other Members who are here but are not members of the subcommittee. They are welcome to submit a written statement. Thank you for being here, Mr. Shimkus, Mr. Buyer, Mr. Whitfield, and Mr. Terry.

On this side, next will be Ms. DeGette for an opening statement, please.

OPENING STATEMENT OF HON. DIANA DEGETTE, A REPRESENTATIVE IN CONGRESS FROM THE STATE OF COLORADO

Ms. DEGETTE. Thank you.

Mr. Chairman, you need to look no further than me to find a loyal long-time Toyota owner. I have three Toyotas, and I have two daughters. My 1988 Camry is the car that I brought my 20-year-old daughter home from the hospital in, and it is the car she drives now.

Most recently, after years of satisfaction with the Toyotas, I was excited to get one of the very first Camry hybrids. And imagine how I felt when my staff came in and told me what Toyota told us to do if the accelerator sticks and we can't slow the car down.

How did we get from 1988 to this? While Toyota has always had great consumer loyalty and, as they will remind you, a low percentage of safety recalls in the U.S., persistent questions exist.

When and how did Toyota learn of these acceleration issues and how did they respond? Was this revealed to U.S. regulators and how did they respond? What was the role of NHTSA and did they take this investigation seriously? Did they make a deal with Toyota that limited a tough and thorough investigation? Has Toyota adequately analyzed all of the potential consequences of unintended acceleration, including whether or not electronic throttle systems may be a part of the cause? Do the recalls to date encompass the entire problem?

Now, look, these questions, to me, they are not partisan questions. They are questions all of us should be asking on behalf of our constituents who drive Toyotas and, like me, have been satisfied Toyota customers for many, many years. And in the end, for me, the answers to these questions are not academic, and here is why: In less than 2 months, my 16-year-old daughter will be getting her license, and the car that she is going to be driving is the 1994 Camry wagon. So let's get this right. Let's make sure these cars are safe for all American teenagers and adults to drive.

I yield back.

Mr. STUPAK. Thank you.

Mrs. Christensen, opening statement, please.

OPENING STATEMENT OF HON. DONNA M. CHRISTENSEN, A REPRESENTATIVE IN CONGRESS FROM THE VIRGIN ISLANDS

Mrs. CHRISTENSEN. Thank you, Mr. Chairman.

After years of buying only American-made make and model cars, because I was also trying to be a responsible global citizen, when it was time to replace my 12-year-old car, I went in search of a hybrid. I decided on a Prius but ended up with a cute little Solara convertible, soothing my conscience by reminding myself that Toyota made cars in this country and, of course, of what was then your stellar history for safety quality and service.

To tell you how I felt about my car, when that commercial asked, when you turn on your car, does your car return the favor, I used to be able to answer yes. Now I am weary as I drive it, and when I go online, all I find out is that it is no longer being made. We Solara owners also need to know if there has ever been a problem

and what was done to correct it so that we know we don't have to worry.

But that is not the most important part of my story. The one that gives me sleepless nights right now is that my two daughters and three and a half grandchildren drive in Toyota-made cars every day, a 2006 RAV4 and a 2005 RX330 Lexus. So I want to hear from Mr. Lentz and Secretary LaHood assurances that they are and will be safe from any manufactured cars' failures and that, if they have a problem, they won't have to go through the ordeal that Mr. and Mrs. Smith had to go through.

And I want to say that I do appreciate the efforts Toyota is undertaking, but it is too late for the family in San Diego and only by the grace of God do we have an intact Smith family here with us today.

So take much more than your press releases and lobbying. And I must say that those of your lobbyists with whom I have worked I have great respect for you, but it is time for you to not just rebuild your image but to rebuild our trust. I hope that you will be able to do that quickly, not just for Toyota's good name but for the lives you carry in your cars every day and for the many direct and indirect jobs you provide in the United States and the families that those jobs support.

I also want to use this opportunity to say to other car manufacturers—because Secretary LaHood will attest that similar complaints come in on every make of car—that I also depend on all of you to put quality and safety over profits, to do the right thing by all of us consumers, to respond to complaints immediately, to investigate the complaints fully, and not to wait to be asked or to be made to issue a recall but to do so early when lives are at risk for whatever reason.

And to the NHTSA and to all who have regulatory authority, we need you to exercise that authority as though the lives of your children and grandchildren, like mine and countless others, depend on your decisions.

I want to thank Mr. and Mrs. Smith for their persistence and for being here today to tell their personal story, to welcome Mr. Kane, Mr. Gilbert, and Mr. Lentz.

Secretary LaHood, when you arrive, it is always good to see you and to have you back.

Thank you, Chairman Stupak and Ranking Member Walden for ensuring once again that we fulfill our oversight responsibility on yet another very important issue in such a timely manner.

I yield back my time.

Mr. STUPAK. Thank you.

Mr. Green for an opening statement, please.

OPENING STATEMENT OF HON. GENE GREEN, A REPRESENTATIVE IN CONGRESS FROM THE STATE OF TEXAS

Mr. GREEN. Thank you, Mr. Chairman, for holding this hearing today on the recall of Toyota vehicles.

I would like to recognize a person in the audience, when I was much younger, as a State legislator in Texas, Joan Claybrook, who is here and a former administrator I think in the Carter administration on the highway safety issue.

Mr. Chairman, I think with opening statements you will hear personal stories from our own members but also I think express our disappointment in the Federal and Toyota's response to the initial accidents.

And, on a personal note, like my colleagues, I have to admit I have always driven Chevrolets. But the second generation in my family, my two children who are now adults, actually drive Toyotas. My son loves his Toyota Tundra. In fact, he is on his second truck; and it is built in Texas, he tells me. I remind him my Chevrolet Tahoe is also built in Texas.

So I guess that is where the frustration is, is that Toyota has had such an image of perfection and if there is a problem fixing it. We know from at least the publicity and from the hearing and testimony that is under review that that fell down, and that just wasn't what people expected.

Since national attention was brought late last summer, Toyota has recalled more than 6.5 million cars for two different problems. But as we hear from our first panel today, Mr. and Mrs. Smith, this issue was present in Toyota cars for several years, and we are here today to examine whether Toyota and the National Highway Traffic Safety Administration responded in a necessary and timely manner.

Mr. and Mrs. Smith, I want to thank you for being here to recall your harrowing experience and to shed some light on the problems you faced when you tried to bring this matter to the attention of both Toyota and the government officials.

The two separate issues for recall of Toyota vehicles were so-called pedal entrapment and the sticky pedal. In September of 2007, Toyota first issued a recall for all-weather floor mats in Lexus and Camry vehicles that caused the pedal entrapment. While this took place over 6 months after NHTSA initially opened its investigation into the pedal entrapment issue, response to the recall was low.

It took another crash due to pedal entrapment—luckily not fatal—for NHTSA to urge Toyota to reissue the recall notice in January of last year, 2009. Unfortunately, the recall was still not widely responded to by consumers and even a dealer, who last August loaned a car to a Mark Saylor and his family. The loaner car had a floor mat from a different model that trapped the accelerator.

After that crash, NHTSA determined Toyota address the issue more thoroughly than just replacing floor mats, which resulted in a Toyota recall of vehicles in October of 2009 and expanded in November to reshape or replace the accelerator pedal for 4.26 million vehicles.

What we need to look at today—and I hope some of our witnesses can answer it—is why neither NHTSA nor Toyota realized there was not enough clearance for the accelerator when the issue first came up in 2007 and why this issue was not addressed more quickly.

The second issue of the sticky pedal did receive a quicker response, and I commend Toyota for bringing information to NHTSA before an investigation was open for quickly issuing a recall.

There are, however, other issues in Toyota vehicles that have been reported to NHTSA involving accelerator problems; and it is

important NHTSA investigate these issues thoroughly before dismissing them. To do that, NHTSA must have the necessary resources and hire staff to investigate all issues, whether it is mechanical or something in the electrical system.

I look forward to hearing from today's witnesses on what we can do to support NHTSA's mission and what changes are being made following this series of recalls. Again, I want to thank the witnesses for being here; and, Mr. Chairman, thank you for holding this very timely hearing.

Mr. STUPAK. Thank you, Mr. Green.

Ms. Sutton of Ohio for an opening statement of 3 minutes, please.

OPENING STATEMENT OF HON. BETTY SUTTON, A REPRESENTATIVE IN CONGRESS FROM THE STATE OF OHIO

Ms. SUTTON. Thank you, Mr. Chairman, for holding this important hearing.

For almost every American buying an automobile is one of the most important purchases, the biggest purchases of their lives. Consumers spend countless hours researching vehicles as they prepare to make this large and important purchase.

And why do they do that? They do that because they know they need a vehicle they can count on. They know that they will need a car to transport them as they go about their daily lives; and, most importantly, they want to know that they have purchased a car that will transport the most precious cargo that they have, which is their families, their children.

Trust is a fragile thing. It is hard to win, and it is easy to lose, and it finds its hold in promises kept and honesty sustained, which is why the problems that the millions of Toyotas have been experiencing have been so shocking.

As documents have become public, we have learned that Toyota has been aware of these problems for years. It was revealed this week that Toyota officials took credit for saving $100 million by successfully negotiating a limited recall on floor mats with NHTSA several years ago.

Consumers deserve better. It is unacceptable when companies and importers pay more attention to their costs than to the safety of their customers. According to NHTSA's data, 34 people have died in the past decade in crashes that may have been caused by sudden unintended accelerations in Toyota vehicles. Toyota and NHTSA have received thousands of complaints involving unintended accelerations from across the country.

Yes, this hearing is extraordinarily important. In many instances, consumers were told that they installed the floor mats incorrectly, but the installation of floor mats can't possibly explain thousands of complaints.

Recently, Toyota identified a problem with sticky pedals and are currently altering or replacing these devices. But the committee's investigation has revealed that Toyota's own counsel stated that a sticky pedal "typically does not translate into a sudden high-speed acceleration event," which leaves Americans wondering about the extent of the problems.

Toyota says that the problems are not related to the electronic throttle control system, but 6 years ago NHTSA compiled data that showed that Toyota Camrys with electronic throttle controls had over 400 percent more vehicle speed complaints than those with manual controls.

These are very concerning issues that we have to get to the bottom of. There is little doubt that Toyota's disappointing actions and the disappointing things that have come to light in the course of this investigation have to be looked at, and they have resulted in the loss of sales for this company. I am very concerned that they will also result in the loss of jobs for workers who have done nothing through the fault of their own to face that potential consequence.

But for the safety of all Americans this recall needs to be done right, and the problems need to be fixed, and the American people need to have the solace of knowing that NHTSA and Toyota are giving the highest of priority to ensuring the safety of the vehicles and the precious cargo that they carry.

I yield back.

Mr. STUPAK. Thank you.

Next, we will hear from Ms. Schakowsky of Illinois, a member of the subcommittee. Ms. Schakowsky.

OPENING STATEMENT OF HON. JANICE D. SCHAKOWSKY, A REPRESENTATIVE IN CONGRESS FROM THE STATE OF ILLINOIS

Ms. SCHAKOWSKY. Thank you, Mr. Chairman.

I want to thank all of our witnesses for coming. I want to just especially note David Gilbert, who teaches in my State as an associate professor of automotive technology at Southern Illinois University. I look forward to the testimony of all of our witnesses.

Like my colleagues, I am extremely concerned about the circumstances that bring us here today. I am concerned that Toyota put unsafe products on the market. I am concerned that Federal regulators had knowledge of unintended acceleration in some Toyota models in late 2003, as Secretary LaHood has acknowledged, but that it took 3 years before an initial investigation into floor mat problems was started.

I am pleased that Toyota has taken action on the issue of pedals being caught in floor mats as well as the issue of sticky pedals and that recalls have followed, but I remain concerned about reports of other unintended acceleration incidents that don't fit neatly into either of those categories and that the company has dismissed those reports. If there is a problem with the electronic system that controls acceleration, we need to know what it is, and it needs to be fixed immediately.

We have also heard reports that State Farm Insurance reported Toyota had acceleration problems to the Department of Transportation in 2004 and that since 2000 there have been more than 2,600 complaints about unintended acceleration in Toyota vehicles and possible links to 34 deaths. I am concerned about whether NHTSA has had the resources necessary to sufficiently investigate these complaints; and I look forward to hearing from my former

colleague, Secretary LaHood, about what he needs to effectively rebuild the agency.

In the coming months, Chairman Rush and I, as the Vice Chair of the committee, will be working on NHTSA reauthorization; and the pieces of the puzzle that we are talking about today are critical to our discussions about the future of the agency and whether it needs additional resources in terms of funding, expertise or authority.

Thank you, Mr. Chairman; and I yield back.

Mr. STUPAK. Thank you.

Last, but not least, a member of our subcommittee, Mr. Braley of Iowa, for 3 minutes for an opening statement, please.

OPENING STATEMENT OF HON. BRUCE L. BRALEY, A REPRESENTATIVE IN CONGRESS FROM THE STATE OF IOWA

Mr. BRALEY. Thank you, Mr. Chairman.

I want to make this clear at the beginning in response to some of the concerns mentioned on the other side of the aisle: I am an equal opportunity consumer safety advocate. I think every manufacturer that sells products in this country should be able to justify that they are doing everything they can to ensure that those products are safe and protect consumers from harm. That includes American automobile manufacturers and foreign automobile manufacturers that do business in this country.

But here are some questions that I think American consumers deserve answers to at this hearing:

One, why has Toyota, with the deserved reputation for its commitment to excellence and safety that you have heard mentioned here today, why do they refuse for so long to seriously address the possibility of a failure of its electronic throttle control system as a contributing factor to sudden unintended accelerations?

Two, once this committee began its investigation of this problem, why did Toyota turn to its product liability defense attorneys at Bowman and Brook to hire its independent expert, Exponent, Inc., to analyze this problem.

Three, was the interim report produced by Exponent, Inc., to justify Toyota's position the equivalent of junk science, and how much credibility should it be given by this committee and American consumers?

Four, is NHTSA, with its important jurisdictional responsibilities, capable, without major changes to its funding and its staff, of making an independent determination of the underlying causes of this problem, given the changing nature of the automobile industry and the increasing reliance upon electronic and computer data?

Five, is there data available in these vehicles that is being withheld from the American public and from regulators of public safety that would give us clues into the underlying cause of these problems, and I am talking specifically about the black boxes that now provide countless amounts of data, and yet are protected from public disclosure in every attempt to try to find out what type of computer data might be available to try to justify and explain why these problems happen.

These are some of the questions I hope that American consumers get answers to today.

I ask unanimous consent to submit my full statement for the record, Mr. Chairman.

[The prepared statement of Mr. Braley follows:]

BRUCE L. BRALEY
1ST DISTRICT, IOWA

WASHINGTON, DC OFFICE
1019 Longworth Building
Washington, DC 20515
(202) 225-2911
Fax (202) 225-6666

http://www.house.gov/braley

ENERGY AND
COMMERCE COMMITTEE
VICE-CHAIRMAN, OVERSIGHT
AND INVESTIGATIONS SUBCOMMITTEE

POPULIST CAUCUS
CHAIRMAN

Congress of the United States
House of Representatives
Washington, DC 20515

WATERLOO DISTRICT OFFICE
501 Sycamore St., Suite 610
Waterloo, IA 50703
Phone: (319) 287-3233
Fax: (319) 287-5104

DAVENPORT DISTRICT OFFICE
209 W. 4TH ST., SUITE 104
DAVENPORT, IA 52801
PHONE: (563) 323-5988
FAX: (563) 323-5231

DUBUQUE DISTRICT OFFICE
350 W. 6TH ST., SUITE 222
Dubuque, IA 52001
Phone: (563) 557-7789
Fax: (563) 557-1324

Statement of Congressman Bruce Braley
Committee on Energy and Commerce
Subcommittee on Oversight and Investigations
"Response by Toyota and NHTSA to Incidents of Sudden Unintended Acceleration"
February 23, 2010

Thank you, Chairman Stupak, Chairman Waxman and Ranking Member Barton, for holding this important hearing today on Toyota and the National Highway Transportation Safety Administration's (NHTSA) response to the problem of sudden unintended acceleration in Toyota vehicles.

I'm extremely concerned and disappointed by Toyota's and NHTSA's delayed and insufficient responses to this deadly problem. Even though Toyota has recalled millions of vehicles and stopped the sale and production of eight models involved in the latest recall, I remain concerned that the company and NHTSA have not gone far enough to get to the root of the problem and ensure the safety of Toyota products, and concerned that there may be dangerous Toyota vehicles still on the road today.

Since 2000, NHTSA has received 2,600 complaints of sudden unintended acceleration in Toyota vehicles, as well as six defect petitions requesting investigations. According to NHTSA, in the past decade 34 people have died in crashes alleged to have been caused by sudden unintended acceleration in Toyota vehicles. These alarming numbers should have spurred Toyota and NHTSA to aggressively investigate and fix any problems in Toyota vehicles. Instead, the company appears to have engaged in denial and blaming drivers for the problems, and NHTSA appears to have conducted only preliminary, inadequate, and ineffective investigations.

I'm especially concerned that, despite evidence to the contrary, Toyota continues to insist that the sudden acceleration problems are only the result of entrapment of the accelerator pedal by floor mats or "sticky" pedals, and are not caused by electronic defects. NHTSA data indicates that complaints of sudden unintended acceleration of Toyota vehicles increased after the introduction of electronic throttle controls, including a 400 percent increase in the rate of complaints regarding vehicle speed after the introduction of electronic throttle controls in Toyota Camrys. In addition, according to the Committee's

review of consumer complaints in Toyota's customer call database, approximately 70 percent of the sudden unintended acceleration events involved vehicles that are not subject to the 2009 and 2010 floor mat and "sticky pedal" recalls.

These facts raise serious questions about why Toyota – without conducting a credible investigation – continues to publicly dismiss the possibility that electronic defects could be responsible for sudden unintended acceleration. These facts also raise serious questions about the safety of Toyota vehicles which have not been recalled but which have generated complaints about unintended acceleration.

The top priority for Toyota, NHTSA, and all of us here today must be to ensure the safety of Americans on the road. I know that local Toyota dealers in Iowa have been working hard to repair recalled vehicles and serve their customers well. However, we will not be able to truly fix these problems without thorough and credible investigations that definitively identify the problem and the solution to the problem.

I look forward to hearing the testimony of the witnesses and I hope this hearing will be an important step in ensuring that all

potential causes of this dangerous and deadly problem are identified and fixed once and for all.

Mr. STUPAK. Without objection, your statement and all statements of members will be submitted for the record.

I misspoke, Mr. Welch is a valuable member of this subcommittee. I didn't see you down there, Peter, if you have an opening statement?

OPENING STATEMENT OF HON. PETER WELCH, A REPRESENTATIVE IN CONGRESS FROM THE STATE OF VERMONT

Mr. WELCH. Thank you very much, Mr. Chairman.

There really is one proposition that is not negotiable, and that is the safety of the American people, the American consumer, and that proposition requires us to ask two questions: Is the National Highway Transportation Safety Administration up to the task of the job, and what do they need to do in order to do that job better?

Second, what did Toyota do, did it do it soon enough, and is it doing it now aggressively enough?

But this question of protecting the public does require governmental response, whether it is involving a car or a toy manufactured from China that is imported here and used by our kids. And the fundamental responsibility when it comes to safety is both with government to have agencies that are looking out for the interests of the American people, and government has been woefully inadequate in doing that, not just in some consumer safety issues, but even in financial products like subprime mortgages.

Mr. Chairman, I am glad our committee is back on the job.

But, secondly, we have an obligation to be fair to all concerned, that is to the dealers, to the manufacturer, to the folks who work in my case Toyota dealerships in Vermont. I have had a chance to speak to Dave Birmingham and Karen and Dan Luneau who are very proud of the work they do. 640 Vermonters work in this. So this hearing is going to make certain that we get to the bottom of these questions about the government and about Toyota, but it has to be fair to all concerned.

Thank you, Mr. Chairman.

Mr. STUPAK. Thank you, Mr. Welch.

Let me also thank other members of the committee who are present but are not members of the subcommittee but are interested in this hearing, but they are here and their presence is appreciated. Mr. Gonzalez is here, Mr. Engel is here and Mr. Gordon is here. Thank you for being here. If you want to submit any written opening statement, we will be happy to receive it.

That concludes all of our opening statements. Before we have our first panel, Mr. Lentz of Toyota has been here with some of his staff and they were courteous enough and didn't want to interrupt the opening statement. If they would like to come forward and have a chair, we would be happy to have them. I always appreciate it when witnesses, no matter what panel they are on, will sit through a full hearing so they get a full favor of our hearings.

So if Mr. Lentz and his staff would like to come up, that will be great. We will recess for a minute while they do that. There is about six seats up front here, if you would like to take the seats up front. That would be great.

Let me call our first panel of witnesses. On our first panel we have Mr. Sean Kane, who is President of Safety Research and

Strategies, Incorporated; Dr. David Gilbert, who is an Associate Professor of Automotive Technology at Southern Illinois University; Eddie and Rhonda Smith of Sevierville, Tennessee, who own a Lexus ES350 that experienced sudden unintended acceleration in 2006. I ask the witnesses come forward.

It is the policy of this subcommittee to take all testimony under oath. Please be advised that you have the right under the rules of the House to be advised by counsel during your testimony. Do any of you wish to be represented by counsel?

Everyone indicating nodding their head no. I take it as a no then. I am going to ask you to please rise and raise your right hand to take the oath.

[Witnesses sworn.]

Mr. STUPAK. Let the record reflect that the witnesses replied in the affirmative. Each of you are now under oath.

We will hear a 5-minute opening statement from our witnesses. You may submit a longer statement for inclusion in the hearing record.

Mr. Smith, if you don't mind, do you want to start, or would you like Mrs. Smith to start? Rhonda, do you want to start first? I am going to ask you to pull that mike up, turn on that button there. The green light should go on. I understand you are going to go 5 minutes and you are going to give it to your husband and he is going to go 5 minutes. Is that correct?

Mrs. RHONDA SMITH. Yes.

Mr. STUPAK. When you are ready. Thank you for being here.

STATEMENTS OF EDDIE AND RHONDA SMITH OF SEVIERVILLE, TENNESSEE; SEAN KANE, PRESIDENT OF SAFETY RESEARCH & STRATEGIES, INCORPORATED; AND DR. DAVID GILBERT, ASSOCIATE PROFESSOR OF AUTOMOTIVE TECHNOLOGY AT SOUTHERN ILLINOIS UNIVERSITY

STATEMENT OF RHONDA SMITH

Mrs. RHONDA SMITH. I would like to begin by thanking the honorable members of this committee and also Mr. Sean Kane and his staff for inviting us here to testify today regarding the much publicized sudden unintended acceleration, or often known as SUA, that has been and is currently being experienced by Toyota drivers, not only in the United States, but all over the world.

SUA has been the cause of numerous deaths and will continue to be unless addressed by this committee, Toyota, and NHTSA. We truly appreciate this opportunity to share our story now since we have attempted numerous times since October 2006.

My name is Rhonda Smith and this is my husband——

Mr. DOYLE. Mr. Chairman, could we get the microphone up? It is hard to hear her.

Mr. STUPAK. Try that.

Mrs. RHONDA SMITH. Is that better?

My name is Rhonda Smith, and this is my husband of 38 years, Eddie Smith. I am a retired social worker with the State of Tennessee and Eddie is a Senior Vice President at a bank in Sevierville, Tennessee. I am truly thankful to be here today, and I feel I am speaking on behalf of those who lost their lives need-

lessly, unnecessarily, and I would like to share an incident with you concerning SUA that I experienced October 12, 2006, in our new Lexus ES350.

This car had 2,728 miles on it when the incident occurred. The vehicle had a keyless push button ignition and required a key fob to be present inside the car in order for it to start.

On that Thursday, October 12th, 2006, and I am going to read this, because I tell you, it still upsets me today, I was driving from my home in Sevierville down Highway 66 to the interstate, Interstate 40, and upon entering the interstate, I accelerated with everyone else into the flow of traffic. And at this point I merged into the second lane, not going into passing gear.

At this time, I lost all control of the acceleration of the vehicle. The car goes into passing gear and the cruise light comes on. At this time, I am thinking that maybe the cruise is what caused the car to keep accelerating as my foot is not on the gas pedal. I take off the cruise control, but the car continues to accelerate.

To make a long story short, I put the car into all available gears, including neutral, but then I put it in reverse and it remains in reverse as the car speeds to over 100 miles per hour down the interstate.

I placed both feet on the brake after I firmly engaged the emergency brake, and nothing slows the car. I figured the car was going to go its maximum speed and I was going to have to put the car into the upcoming guardrail in order to prevent killing anyone else, and I prayed for God to help me.

I called my husband on the Bluetooth phone system. I knew—I am sorry—I knew he could not help me, but I wanted to hear his voice one more time. After six miles, God intervened as the car came very slowly to a stop. I pulled it to the left median.

With the car stopped and both feet still on the brake, the motor still revved up and down. At 35 miles an hour, it would not shut off. Finally, at 33 miles per hour, I was able to turn the engine off.

After my husband arrived, he found nothing unusual about the accelerator or the floor mats, but the strange thing was that the dash lights and the radio were still on. After the wrecker arrived, we gave the vehicle fob to the wrecker driver. When he hooked the car and prepared to winch it onto the rollback, he asked my husband to put the car in neutral so he could start the winch.

The driver was standing 20 to 25 feet away at the rollback controls. Without thinking, my husband sat down in the car without the key fob and was able to shift the car into neutral, which he shouldn't have been able to do. But when he did that, the car actually tried to start itself. We have a notarized statement from Tommy Clayton, the wrecker driver, attesting to this.

Toyota said they would inspect our Lexus and contact us. After 10 days, we still had not received a call back. We called again and got the same assurances. Toyota promised us they would look into our complaint several more times over the next few weeks.

When we finally forced Toyota to respond in writing, we received a five-sentence analysis stating, and I quote, "When properly maintained, the brakes will always override the accelerator." Well, we know that is a lie. And we were outraged that Toyota would suggest in that statement also that the brakes had not properly been

maintained in order for that to happen, and the car had less than 3,000 miles on it.

Once again we contacted our dealer and expressed our disgust with Toyota's handling. They recommended we contact NCDS, which is the National Center for Dispute Settlement, and ask for an arbitration hearing.

Our NCDS hearing was a total farce. The representative for Lexus was Mr. Leonard St. Amand, their Tennessee district field technician. Mr. St. Amand, although only an hour away in Kingsport, did not show his face, and he attended via speakerphone. He insisted that he could not recreate the incident and that I had more than likely caused this problem by standing on the brakes while spinning the tires.

Well, of course, we were furious that Toyota called us liars the second time. NCDS denied our claim for a total refund of our purchase price for this specific car, which is all we were asking for.

In mid-March 2007 we turned to NHTSA for help. Mr. Steve Chan and Mr. D. Scott Yon, safety defects engineers, responded. Mr. Yon took over our claim and seemed to be receptive of our concerns that sudden unintended acceleration in Lexus vehicles could cause serious injury, and we told them possibly death at that time, that somebody was really going to get hurt. We furnished pictures of the car and documentation of what had transpired since October 2006.

On April 11, 2007, Mr. Yon flew to Knoxville, Tennessee, and drove to Sevierville to inspect the car. My husband will address that in a moment.

Since neither Toyota nor NHTSA took us seriously, we tried to alert the public through the news media back then. We contacted numerous news agencies, a lot that are probably here today, and we tried all types of media, only to have one local station take an interest in our claim that Toyota and NHTSA were ignoring a deadly problem.

Only one local station, Don Dare with WATE–TV channel 6 in Knoxville, did the story, which aired spring of 2007. We repeated our strong belief that the problem was somewhere in the electronics.

After the Santee, California, crash that killed a California highway patrolman and his family, WATE–TV did a second story on Toyota's sudden unintended acceleration. This was broadcast in February 2010, showing our original interview and a current interview. We have never wavered from our belief that our problem was electronic, not wandering floor mats. We forwarded this 2010 video to Toyota and NHTSA and received no response.

In early 2008, we reluctantly let go of our mission to persuade Toyota and NHTSA to deal with the problem because the effort was too traumatizing. But we are here today because for the first time we feel our story has been given more than a token of attention. Unfortunately, it took almost 4 years and injuries and lives lost to prompt Congress to take up this important issue.

In 2006 and 2007, we hoped that our efforts spared others the unnecessary terror and pain of an SUA incident, and it pains our hearts deeply to realize that we failed. But this failure is surely shared by Toyota and NHTSA today. In our view, they have dem-

onstrated an uncaring attitude and disregard for life. The results have been tragic, and today I must say, shame on you, Toyota, for being so greedy, and shame on you, NHTSA, for not doing your job.

It is our hope that this testimony will help all of Toyota's customers in a way that Toyota has not yet done to this day.

Once again, I would like to thank this committee for taking the time to listen to our story. It is about time we were heard, and I hope that Toyota and NHTSA will be held accountable for the poor decisions that have cost some people their lives. We would also like to ask this committee to set a higher standard for NHTSA to be held more accountable in the future.

I thank you.

[The prepared statement of Mr. and Mrs. Smith follows:]

February 23, 2010 Committee on Oversight and Investigations

Testimony by Rhonda and Eddie Smith

We would like to begin by thanking each of the Honorable Members of this committee for inviting us to testify today regarding the much publicized "sudden unintended acceleration"(SUA) that has been, and is currently being experienced by Toyota drivers not only in the United States, but all over the world. SUA has been the cause of numerous deaths and will continue to be, unless addressed by this committee, Toyota and NHTSA. We truly appreciate this opportunity to share our story now, since we have attempted numerous times to bring this deadly problem to Toyota and NHTSA's attention since October, 2006.

My name is Eddie G. Smith and I reside in Sevierville, TN. I am a senior vice president with Citizens National Bank in Sevierville, TN. This is my wife of 38 years, Rhonda Smith. She is a retired social worker with the State of Tennessee. We have 2 children and 2 grandchildren.

We would like to share our experience with you concerning a SUA incident experienced by my wife on October 12, 2006 in our new Lexus 350 ES. This car had 2728 miles on it when this occurred. The vehicle has a keyless, push button ignition and requires a key fob to be present inside the car in order for it to start. My wife was driving the car and called me on my cell phone at work during most this horrifying experience. Rhonda wrote down this experience October 13, 2006, as we knew this was a potential deadly malfunction that could possibly affect many other Toyota drivers. She is going to read her experience to you, as written by her that day.

" I am writing these words to try and convey some of my feelings of a near death experience, which occurred on October 12, 2006 between approximately 10:50 and 11:00 a.m.

On this Thursday, I had planned on visiting my 85 year old father in Knoxville. I was driving my 2007 Lexus 350 ES from my home in Sevierville down Hwy 66 to I-40 East. Upon entering I-40 I accelerated with everyone else, into the flow of traffic. At this point, I merged over into the second lane, NOT going into passing gear.

It is at this time I lost all control of the acceleration of the vehicle. The car goes into passing gear and the cruise light comes on. At this time, I am thinking that maybe the cruise is what has caused the car to accelerate, as my foot is NOT on the gas pedal. I take off the cruise control. The car continues to accelerate. The car is now up to 80 mph. The brakes do not slow the car at all. Now I am at 85-90 mph. I push the car into NEUTAL and it makes a revving noise. I push the emergency brake on... nothing helps. I continue hitting and slamming the brakes. Now I am at 85-90 mph. I look at the traffic ahead to see if I can maneuver in and out of the upcoming cars and trucks, or if I am going to need to put the car into the guardrail and into the trees.

The last time I looked at the speedometer it read 100 mph. At this time, I had the emergency brake on while frantically shifting between ALL the gears (besides park) but mainly had it in REVERSE and with the emergency brake on. I finally figured the car was going to go to its maximum speed and was praying to God to please help me. After about 3 miles had passed, I thought it was my time to die, and I called my husband (on bluetooth). I knew he couldn't help me in this particular situation, but I just needed to hear his voice. What an awful 911 call he received at work.

At almost exactly 6 miles God intervened. I had not tried anything different that I had frantically tried before to slow the vehicle, yet the car began to slow down ever so slowly. It slowed enough for me to pull to the left median, with the motor still revving up and down. At 35 mph it would not shut off. Finally, at 33 mph I was able to turn the engine off. However, the radio remained on and I was not about to touch ANY button on that car, or ever again."

Rhonda C. Smith

Eddie arrived approximately 5-10 minutes later at my location, still on the phone with me. After trying to calm me down he inspected the vehicle to make sure it was turned off and secure. At this time he made a visual inspection for anything out of the ordinary that might have caused this. There was nothing unusual concerning the accelerator or anything that might have jammed it open. The car radio and inside lights were still on, even though I had exited way away from the car and had turned it off. He immediately called a wrecker, as I knew I was never going to drive that car again. After the wrecker arrived, the wrecker driver was given the key fob and asked to tow it back to Sevierville. When he hooked to the car and prepared to winch it onto the rollback, he asked my husband to put the car in neutral so he could start his winch. The driver was standing 20-25 feet away at the rollback controls. Without thinking, my husband sat down in the car with no fob on him and was able to pull the car from park to neutral. This should not have happened. As the car went into neutral, the car actually tried to start by itself with the engine turning over several times. This shocked my husband and he immediately exited the vehicle. At that time the wrecker driver walked back and they were dumbfounded as to how the vehicle could try to start with no key fob inside the vehicle. We have a notarized statement from Tommy Clayton, the driver with Baker's Wrecker Service, stating this fact to be true. The vehicle was then towed back to Sevierville and then to the dealership in Kingsport, TN. The dealership was told this story and they advised they would thoroughly check it out. After several weeks we were advised they could find nothing wrong with the car. We refused to accept this answer and attempted to contact Toyota by phone to let them know that we felt they had an electronics issue that could lead to serious injury and death. Toyota advised they would check on our situation and contact us. After a week to 10 days we had not received a call back. We called again and got the same story of "we will check on it and contact you as soon as possible". This happened the same way several times over the next few weeks and we finally forced a written reply from them that stated, and I quote, "when properly maintained, the brakes will always override the accelerator". Once again we contacted our dealer and expressed our disgust with Toyota's handling of this and they advised us to contact NCDS (National Center for dispute Settlement) and ask for an arbitration hearing. We were eventually set up by NCDS to have a hearing in Gatlinburg, TN, on March 1, 2007. The representative for Lexus was Mr. Leonard St. Amand, their TN District Field Technician. Mr. St. Amand, although in Kingsport at the time (a 1 hour drive), did not bother to show up but chose to attend via speaker phone. This turned out to be a farce with Mr. St. Amand stating he could not re-create the incident and that we had more than likely caused this problem by standing on the brakes while spinning the tires. Of course we were insulted and furious over being called liars. Needless to say, NCDS denied our claim for a total refund of our money for this "possessed" car, and for the record we did not owe any money on this vehicle.

During this time we had contacted NHTSA and after some prodding, we were contacted by Mr. Steve Chan and Mr. D. Scott Yon, Safety Defects Engineers. This was about the middle of March, 2007.

Mr. Yon took over our claim and seemed to be very receptive of our concerns for this SUA (Sudden Unintended Acceleration) causing serious injury and possibly death. We furnished pictures of the car and documentation of what had transpired since October, 2006. On April 11, 2007, Mr. Yon flew to Knoxville, TN, and drove to Sevierville to inspect our vehicle. The vehicle had been towed to a local Sevierville car dealer's lot and secured for Mr. Yon's inspection. He seemed to arrive with the pre-conceived idea to sell to us, that it was a floor mat problem. We continually insisted that it was not the mats, but instead somewhere in the electronics. Mr. Yon, along with my husband, took the vehicle on a short test drive. Mr. Yon performed several tests at a speed of 50 mph or less. These tests included placing the car in neutral while accelerating, and trying to stop the vehicle with the accelerator engaged and the foot brake fully applied. The transmission did disengage when put in neutral, but the car would not come to a complete stop with the foot brake engaged. Upon returning to the car lot, Mr. Yon and my husband placed the vehicle on a hydraulic lift and removed the wheels and tires. All of the brake pads were totally burnt up and the rotors and drums were ruined. Eventually this was something we had to pay to repair ourselves.

After insisting it was "probably" floor mats, Mr. Yon issued his final report and put the blame on the floor mats. These floor mats were a heavy gauge rubber mat placed on top of the summer mats by the dealer. It would have taken a magic trick for this mat to turn up enough or slide forward enough to cause this SUA. The report was issued on May 2, 2007. In it Mr. Yon claimed to have performed a test with the floor mat in our presence that would show cause for the floor mat to be blamed. This was never demonstrated to us or shown to us that it could ever happen accidently. Once again we advised NHTSA and Mr. Yon that this SUA problem was going to eventually cause the loss of life and serious injury.

At this point we contacted numerous news agencies across the United States, only to have one local station take an interest in our claim of Toyota and NHTSA ignoring this potential deadly problem. Don Dare with WATE-TV, Channel 6 News, Knoxville, TN called and did a full broadcast interview with us, showing where Toyota and NHTSA claimed that SUA was caused by floor mats. He also showed that we believed it to be somewhere in the electronics and not the floor mats. This was aired in the spring of 2007. WATE-TV did another broadcast interview in February, 2010 showing the first interview along with the current interview and showcasing the highway patrolman and his family's horrible 911call shortly before their deaths. The 2010 interview seemed to confirm our 2007 assertion that it was not floor mats, but in the electronics. We did forward this 2010 video to Toyota and NHTSA and received no response.

This was all done by the news station and us to hopefully warn the American public that there was a tremendous and possibly deadly issue with Toyota vehicles, and that Toyota and NHTSA were aware of SUA at least since 2006 but chose to blatantly ignore it.

Eventually in early 2008, due to the traumatizing effect this had taken on Eddie and me, we decided to give up our mission to get Toyota and NHTSA to address this electronics problem in the hopes that they had somehow corrected it. Unfortunately, it took almost 4 years, a mass of injuries and numerous lives being lost for Toyota and NHTSA to confess their sins in this joint dismissal, or cover up, whichever the case may be.

In summary, we would like to inform this committee and the American public that we feel we put forth our best effort in 2006 and 2007 to inform Toyota Motor Company and NHTSA of the potential for SUA to become a deadly issue.

Our hopes were that our efforts might help spare the unnecessary injury and loss of innocent lives. However, we failed miserably, all due to Toyota and NHTSA's uncaring attitude and total disregard for human life.

One would think that Toyota, along with NHTSA's help, would have stepped up and used some of their massive profits to address this now major, deadly problem.

It is our hope that this testimony will in some way help the families of those killed and those that sustained serious injuries from SUA. We also hope they will somehow benefit from the knowledge that we provided critical information to Toyota and NHTSA showing that the problem was not floor mats but in the electronics of their vehicles at least 3 ½ years ago.

Once again, we would like to thank this committee for taking the time to hear our story and hope that somehow Toyota and NHTSA will be held accountable for choosing the path of not preventing the unnecessary loss of life. We would also like to ask this committee to set a higher standard for NHTSA to be held accountable for in the future.

Thank you,

Rhonda and Eddie Smith

Mr. STUPAK. Thank you, Mrs. Smith. Mr. Smith, your opening statement. Please pull that mike up.

STATEMENT OF EDDIE SMITH

Mr. EDDIE SMITH. Good morning. I am sorry, it is good afternoon.

I would also like to take an opportunity to thank the honorable members of this committee for inviting us to testify today and to share our sudden unintended acceleration experience, along with my thoughts and feelings. As my wife told you, my name is Eddie G. Smith. I am the husband of Rhonda, who you just heard speak.

We purchased this 2000 Lexus ES350 because of Toyota's exemplary claim of safety, as we have young grandchildren.

It has been a true experience trying to decide what to say today. You have all heard my wife describe her experience. Now, take a minute and put yourself on the other end of the cell phone listening to what you think are the last words you will ever hear her speak and the imminent death of your lifelong best friend and spouse and not being able to do anything about it.

Besides this being the most terrifying, traumatizing experience of my wife's entire life, it is also the most frightening and heart-wrenching thing I have ever experienced. Needless to say, she was spared by the grace of God and is still by my side today.

We have never been crusaders for any cause, other than our God, family, and freedom. However, we have been on a mission to get this injustice to the American people noticed, addressed, and fixed.

Toyota was informed of this potentially deadly problem in 2006 and was warned by us numerous times that lives would be lost if this was left unattended. We phoned, e-mailed and wrote numerous letters trying to get Toyota to correct this sudden unintended acceleration problem.

Our complete customer satisfaction that we received, as Rhonda said, was a statement from Toyota stating if properly maintained the brakes would always override accelerations. They called us liars.

Next, Toyota pushed this to arbitration with the National Center for Dispute Settlement. This was one of the biggest wastes of my time and my wife's time and money we have never seen. It was a complete setup meeting to try and make us go away, and we didn't. Once again we were called liars, and actually accused of ruining our own brakes and transmission. This had the complete smell of a prearranged decision by Toyota and NCDS.

Now we have NHTSA. As you know, NHTSA by their own admission on the Web site is that it is our U.S. administration responsible for reducing deaths, injuries, and economic losses resulting from crashes. Their mission statement is to save lives, prevent injuries, and reduce traffic-related health care and other economic costs.

At first we got the good warm feeling that someone actually did believe us who cared enough to try and prevent any further possibility of loss of life. They even made a trip to inspect our vehicle. We finally felt our government would actually step in and bring Toyota to task and resolve this issue, thus sparing others from going through the experience my wife went through.

Were we ever wrong again. Now their claim was it was probably the floor mats, thus a massive mail-out of small orange warning stickers to place on the rubber mats. This was their fix.

After reading Mr. Yon's report, we realized that NHTSA had only sat in to sell us on the idea that this problem was not electronics, rather a floor mat. They went through the motions and tried to appease us with this absurd theory.

I was present during the complete investigation by Mr. Yon. The floor mat test referred to in Mr. Yon's report, as you have all read, was a complete fabrication of the truth. This never happened and was never shown to us at any time during his visit. Once again we felt we had only received lip service.

Now that lives have been lost and sudden unintended acceleration seems to finally have been admitted an electronic issue, why do Toyota and NHTSA not remember Rhonda Smith's pleas in 2006 for someone to take heed and fix this killer problem.

My point from all this is to say for a purported reliable and safety concerned company, such as Toyota claims to be, they sure took the easiest and cheapest route on the electronic issue brought to their attention by us in 2006. How many American lives should have been spared? My customer satisfaction from Toyota and NHTSA consists of an extremely traumatized wife. I was labeled a destructive, lying idiot. And I paid the repair bill to fix the brakes, rotors and drums on our 2007 Lexus.

Many have experienced sudden unintended acceleration, and unfortunately some are not alive today to be able to tell their story. Rhonda is here today to testify before this committee for all those who have died and their families. Hopefully some justice will finally be served.

To Toyota, I say your quality and safety record has been totally destroyed by your past and present words and actions. Now your integrity has come into play. How are you going to handle this? We are here today to help see that you don't shove the American people under the rug again and that your true colors are finally revealed.

To NHTSA, I feel you have totally failed the American public, and I personally feel you as our government watchdog need to stop feeding from your Japanese bowl.

Thank you very much for your time.

Mr. STUPAK. Thank you, Mr. and Mrs. Smith.

Next we will hear from Mr. Kane from Safety Research and Strategies. Your opening statement, please, sir.

STATEMENT OF SEAN KANE

Mr. KANE. Yes, thank you, Chairman Stupak and members of the committee.

Mr. STUPAK. Hold that up a little bit closer.

Mr. KANE. Thank you, Chairman Stupak and members of the committee, for holding this important hearing, for inviting me to come testify before you today.

I am the President and Founder of Safety Research & Strategies. We are a research and advocacy firm that specializes in automotive and consumer product safety issues.

In addition to providing factual research to attorneys, engineers, corporations, and government, we leverage our understanding of the safety issues to advocate on behalf of consumers. That is part of my company's mission. That is what I have been doing for nearly 20 years.

I have been invited here to really help the committee in understanding how did we get here today with Toyota unintended acceleration, how this problem unfolded, and to address the various related electronic issues that seem to be part of this issue today.

For the record, I am submitting our report, Toyota Sudden Unintended Acceleration, which provides a detailed examination of the issue. We released our report on February 5th and we had an addendum on the 19th to provide the committee and the public with context for the crisis that has been really in its making for many years.

I am also submitting a preliminary report, Toyota Electronic Throttle Control Investigation, which we commissioned with automotive technology professor Dr. David Gilbert of Southern Illinois University at Carbondale. Dr. Gilbert's preliminary report provides critical insight into the fail-safe detection capabilities of the electrical circuitry designed to prevent unintended acceleration in some electronic throttle controlled vehicles manufactured by Toyota.

In our report, we look at the complexities and inconsistencies in the public record. Almost everything we have been informed by is in clear view and in the public record. It is difficult to find sometimes, but we spent a lot of time reviewing those records. And what we have concluded from the records that we have examined is that neither Toyota nor the National Highway Safety Administration has identified all the causes of sudden unintended acceleration in Toyota and Lexus models, nor has the auto maker implemented remedies that address the types of complaints that consumers are reporting, and that concerns us greatly.

We are really concerned about the unintended acceleration circumstances that many drivers and witnesses have reported to Toyota in their Lexus models and how they have been handled. They are rooted in the fact that many of these incidents don't relate to the recalls. In our analysis of about 2,263 complaints, we found that nearly half of those complaints fall outside of any recall whatsoever.

Listening to the experiences of the Smiths of a Lexus that raced down the highway, they are fortunate to be here today. Others are less fortunate. The problem may be rare, but it is serious.

Jeff Pepski of Plymouth, Minnesota, he petitioned NHTSA to investigate the defect in his Lexus. He also experienced unintended acceleration at a highway speed. To try and bring his car under control, he put his foot underneath the pedal to pull back on the pedal. He had carpeted floor mats in his car.

Neither one of those relate back to these recall issues. If it was a sticky pedal, that pedal would have returned with the foot. If it was a floor mat, it would have been crept up and forward, and it would have to have been an all-weather floor mat. He had carpeted floor mats in his vehicle.

Using mounting evidence, including eight NHTSA investigations, six of them at the request of consumers, countless unintended ac-

celerations that were summarily dismissed by Toyota as driver error or floor mats, yielded only a couple of small recalls. It took a horrific crash, one that we all know about, that occurred on August 28, 2009, that killed a CHP officer and his family, that haunting 911 call. It was a watershed moment in this crisis.

Due to neglect and the failure to address these root causes and by NHTSA's failure to thoroughly investigate some of the consumer claims, despite the steady stream of these claims, it is hard to understand why a CHP officer couldn't bring control to his car. The evidence in NHTSA's public record is ambiguous. If it was a floor mat, Toyota is guilty of failing to acknowledge a very serious and real consequence of pedal entrapment for years.

Since the agency pointed out in a 2007 investigation drivers could easily stop a runaway vehicle, the very fact that a mispositioned or incorrect floor mat could even cause this kind of problem, this significant outcome, speaks volumes to the way Toyota has handled this safety issue today. The simplest of problems, a floor mat interference, hasn't been handled appropriately.

If the floor mat didn't confine the pedal, then Toyota and Lexus owners have a real cause for worry that their vehicles have an unidentified defect constituting a severe safety hazard.

Based on our surveillance of the complaint data, which is in the public record, extensive interviews with consumers who have experienced SUA, the benefit of a scientific statistical analysis by the folks at Quality Control Systems, we chose to focus our attention on the electronic throttle control system, which is often called drive-by wire.

Following an SUA incident, consumers frequently report to Toyota dealers that their field technical specialist could find no vehicle-related problems. Specifically, they report the absence of what is called a diagnostic trouble code, a DTC, an error code.

Toyota has consistently argued that its electronic throttle control design in fail-safe systems was built with multiple redundancies and that the electronic throttle cannot malfunction with its diagnostic system without it catching an error and employing fail-safe modes.

In response to NHTSA, the company flatly rejected the concept of unintended acceleration. In fact, they stated, "With regard to allegations of unintended acceleration, Toyota does not believe that uncontrolled acceleration can occur without the driver applying the accelerator pedal. If an abnormal condition occurs, such as the ETC, the electronic throttle control, sending the signal to a throttle body to open the throttle without applying the accelerator pedal due to a failure of a component or a malfunctioning of the system, or the throttle were to simply open on its own, the system would go into fail-safe mode."

Because drivers' real-world experiences are running counter to what these statements reflect and Toyota's unshakeable belief that their system was infallible, we felt it was important to examine that malfunction detection system and the fail-safe capabilities of Toyota's vehicles with ETC.

As a result, we commissioned some research in this area. The findings are still very preliminary, but they are urgent. The urgent

nature of them has had us working long nights and weekends with Dr. Gilbert to get the preliminary report to this committee.

We have learned from Dr. Gilbert's preliminary study that there are conditions in the Toyota Lexus models tested in which the redundancy of electronic circuits in the electronic throttle control are lost, particularly in what is called the accelerator pedal position sensor. Losing circuit redundancy in the system creates a loss of fail-safe modes that Toyota has programmed, and notably the system will not detect an error. No DTC, no diagnostic trouble codes are found.

Once this happens, you have now loaded the gun. In this State, lacking a redundant fail-safe, various scenarios can be introduced in the electronic control module, the computer, that read wide open throttle without any input from the driver, and again without setting a single diagnostic trouble code, no errors. This should never happen.

Simply increasing voltage to the pedal position sensor while in a compromised state can induce this uncommanded wide-open throttle condition. These scenarios can occur because Toyota's fail-safe parameters are broad. The design allows a wide window of opportunity for problems to occur that are not seen as abnormal by the computer.

Dr. Gilbert's testing demonstrates that vehicles can react to sensor areas in ways that appear consistent with consumer complaints of unintended acceleration. We must emphasize that at this point it is going to take additional research to make the connection between the two, but his work provides an important baseline for understanding potential electronic root causes of unintended acceleration in Toyota vehicles.

At this point we simply have two bookends. One end of it is Dr. Gilbert's analysis which finds there are holes in the Toyota system that can allow these failures to occur undetected. On the other hand, we have got reports from folks like the Smiths where clearly their incidents are related to electronic problems, and yet no diagnostic trouble codes are found when their cars are brought in.

Mr. STUPAK. I am going to have to ask you to wrap it up.

Mr. KANE. So how do we get here today? We get here today because like many large scale problems, they are complicated, they are multifaceted, they are multi-root caused. There is no one simple solution.

At this point, there is much work to be done, and we believe that both Toyota and National Highway Traffic Safety Administration play a role in how we got here today. But this is squarely Toyota's problem. They created this crisis, and this problem has been festering beneath the surface for years. It took a crisis and it took a crash that captured the Nation's attention to get this to a place where it is today.

Thank you.

[The prepared statement of Mr. Kane follows:]

Safety Research & Strategies, Inc.
340 Anawan Street / Suite 200
Rehoboth, MA 02769
Ph. 508-252-2333, Fax 508-252-3137
www.safetyresearch.net

February 23, 2010

The Honorable Bart Stupak
Chairman, Subcommittee on Oversight and Investigations
2125 Rayburn House Office Building
Washington, D.C. 20515

Toyota Sudden Unintended Acceleration

Thank you Chairman Stupak and the honorable members of the Subcommittee on Oversight and Investigations for holding this important hearing, and for the opportunity to testify before you today.

I am the president and founder of Safety Research & Strategies, a research and advocacy firm specializing in automotive and product safety. In addition to providing research to attorneys, engineers, corporations and government, we leverage our understanding of safety issues to advocate for consumers on important safety matters – this is part of my company's mission.

I have been invited to help the Subcommittee understand how the Toyota unintended acceleration problem unfolded and to address concerns related to the electronics in these vehicles. For the record I am submitting Safety Research & Strategies' report ***Toyota Sudden Unintended Acceleration***, which provides a detailed examination of these issues. We released this report on February 5 and an addendum on February 19, 2010, to provide the Committee and the public with context for this crisis that has been in the making for years. I am also submitting a preliminary report, Toyota ***Electronic Throttle Control Investigation***, which we commissioned with automotive technology professor Dr. David Gilbert of Southern Illinois University Carbondale (SIUC). Dr. Gilbert's preliminary report provides critical insight into the fail-safe detection capabilities of the electrical circuitry designed to prevent unintended acceleration of some electronic throttle controlled vehicles manufactured by Toyota.

Our report examines the complexities and inconsistencies within the public record on Sudden Unintended Acceleration (SUA) incidents involving Toyota vehicles. We have concluded that neither Toyota nor the National Highway Traffic Safety Administration (NHTSA) has identified all of the causes of SUA in Toyota and Lexus model vehicles, nor has the automaker implemented remedies that address the types of complaints consumers are reporting.

We are extremely concerned about the unintended acceleration circumstances that many drivers and witnesses have reported in their Toyota and Lexus models. They are rooted in the fact that many of these incidents do not relate to the recalls Toyota has initiated and nearly half of the more than 2,263 complaints we have examined involve vehicles outside of any recall campaign.

The experience of Rhonda Smith of Sevierville, Tennessee – a Lexus that raced to more than 100 miles per hour, accelerated and decelerated, and tried to start itself after being shut down – belies the floor mat and or "sticky pedal" recalls and is certainly not "driver error." The Smiths are not alone in their experience. Jeffery Pepski of Plymouth, Minnesota, who petitioned NHTSA to investigate this defect in Lexus vehicles, also experienced sudden unintended acceleration at highway speed, and fought to bring it under control as he pulled up on the pedal with his foot. His vehicle was only equipped with original equipment carpet mats, and his pedal had not been entrapped.

Years of mounting evidence – including eight NHTSA investigations – six at the request of consumers – and countless unintended acceleration incidents that were summarily dismissed by Toyota as driver error or floor mats has yielded only a couple of small recalls. It took a horrific crash on August 28, 2009, that killed California Highway Patrol Officer Mark Saylor, his wife, young daughter and brother-in-law for this issue to reach the tipping point.

It was a watershed moment in a crisis, caused by Toyota's neglect and failure to address the root causes, and by the National Highway Traffic Safety Administration's failure to thoroughly investigate consumer claims despite the steady stream of complaints. Many could not understand why a highly experienced California Highway Patrol officer couldn't safely bring the vehicle under control and to a stop. Was the floor mat really the cause? The evidence in NHTSA's public record is ambiguous. If the floor mat was to blame, Toyota is guilty of failing to acknowledge the very serious and real consequences of pedal entrapment for at least two years, since the agency pointed out in a 2007 investigation that drivers could not easily stop a runaway vehicle. The very fact that a mis-positioned or incorrect floor mat could cause create such a significant outcome speaks volumes to the slim margin of safety in these vehicles.

If the floor mat did not confine the pedal, then Toyota and Lexus owners have real cause to worry that their vehicles have an unidentified defect constituting a severe safety hazard.

Based on our surveillance of the complaint data, extensive interviews with consumers who experienced SUA, and with the benefit of a scientific statistical analysis of the complaints, we chose to focus our attention on the Electronic Throttle Control System (ETCS) – often called drive-by-wire – found in many Toyota vehicles.

Following an SUA incident consumers frequently report that Toyota dealers and Toyota's Field Technical Specialists could find no vehicle-related problems. Specifically, they report the absence of Diagnostic Trouble Codes (DTCs) – error codes – in the vehicle computer.

Toyota has consistently argued that its Electronic Throttle Control design and failsafe systems were built with multiple redundancies and that the electronic throttle can not malfunction without its diagnostic system catching the error and employing one of four failsafe modes. In response to NHTSA the company flatly rejected the very concept of unintended acceleration stating:

> "With regard to allegations of unintended acceleration, Toyota does not believe that uncontrollable acceleration can occur without the driver applying the accelerator pedal ... If an abnormal condition occurs, such as the ETC sending the signal to the throttle body to open the throttle without applying the accelerator pedal due to a failure of a component

> or a malfunction of the system, or if the throttle simply were to open on its own, the system goes into failsafe mode."[1]

Because drivers' real-world experiences ran counter to Toyota's unshakeable belief that its system was infallible, we examined the malfunction detection and fail-safe capabilities of Toyota vehicles equipped with Electronic Throttle Control. The research we commissioned in this area is still preliminary. However, because of the urgent nature of this problem and the significance of the findings, we are disclosing the results thus far.

What we have learned from Dr. Gilbert's preliminary study shows that there are conditions in the Toyota and Lexus models tested in which the redundancy of electronic circuitry in the Electronic Throttle Control is lost – particularly in the Accelerator Pedal Position Sensor (APPS). Losing circuit redundancy in the system creates a loss of the fail-safe modes that Toyota has programmed and notably the system will not detect an error – no "Diagnostic Trouble Codes" are set. Once this happens, you've now "loaded the gun" so to speak. In this state, lacking a redundant failsafe, various scenarios can be introduced in which the Electronic Control Module (ECM) can read a wide-open-throttle condition without any input from the driver, again without setting any error codes. Simply increasing the voltage to the APPS while in a compromised state can induce an uncommanded wide-open throttle condition, again resulting in no detectable codes. These scenarios can occur because the Toyota failsafe parameters are broad – the design allows a wide window of opportunity for problems to occur that are not seen as abnormal.

Dr. Gilbert's testing demonstrates that vehicles can react to sensor errors in ways that appear consistent with consumer complaints of unintended acceleration. We must emphasize that it will take additional research to determine the connection between the two. However, his work provides an important baseline for understanding a potential electronic root cause of unintended acceleration in Toyota vehicles.

How did we get before this committee today? Like many large-scale defect-related tragedies, there is rarely a singular cause or event at the root of a problem; rather, a number of issues align. Firestone tire/Ford Explorer rollovers that dominated the news at the beginning of the decade were the result of design and manufacturing defects in the tires, combined with an application on a rollover-prone vehicle that was sensitive to tires. In addition, the tire's long wear on the best-selling SUV ensured wide exposure.

There are many parallels between that crisis and Toyota's problems today. It is becoming increasingly apparent that Toyota SUA incidents stem from multiple causes. Complaints have been found across many years, makes and models of Toyota vehicles, under a range of driving conditions. Consumers' descriptions of SUA incidents do not all fit the current recall descriptions. Many consumers report sudden full-throttle occurrences when parking at low speeds with the brake applied. Others describe on-highway events in which the vehicle continues to increase in speed without pedal application. In many cases floor mats are secured or simply absent. Further, Toyota dealer and field service representatives' inspections report no physical impairments, such as a "sticky pedal."

Toyota initially blamed customers for improperly installing accessory floor mats and resisted taking widespread action. In 2005 and 2007, the automaker launched two small recall campaigns. The first corrected an accelerator that could stick in Lexus IS250 vehicles; the second replaced

[1] DP05002; Toyota Response; November 15, 2005

all-weather floor mats in a limited group of 2007 and 2008 Lexus and Camry vehicles. More recently, under growing public pressure, Toyota has initiated much larger recalls to redesign floor mats, shorten the accelerator pedal, and in some vehicles, install a brake override feature. The automaker has also launched a second recall for sticky accelerator pedals.

Toyota has been slow to accept its responsibility in creating this safety hazard. That floor mats could so easily entrap the accelerator pedal suggests design flaws that could encompass the mat, the floor arrangement on the driver's side, the pedal mechanism itself, the pedal placement or any combination of these factors.

An accelerator pedal that is slow to return to idle requires repair, but does not cause Sudden Unintended Acceleration incidents many consumers report.

NHTSA's investigations have been too brief and cursory to find other causes. Its decisions to open or close probes, based on shifting and narrow premises, have contributed to a continuing safety issue. That may be the result of a lack of electronic expertise or the resources to fully investigate the electronic causes, or a bias against non-mechanical causes, rooted in the 25-year, and frequently controversial, history of SUA.

In 1995 I photographed a display on a board in front of the Office of Defects Investigation in NHTSA. On the board was a larger poster analyzing ODIs goals and areas that needed improvement. Bullet point five under Existing Problems reads: "Have passive screen areas: certain complaint issues (engine stalling, transmission park to reverse, sudden acceleration, etc.) are frequently reported but passively screened because ODI has not successfully pursued recalls in those areas."

The Sudden Unintended Acceleration debate was born in the 1980s, when angry Audi owners, claiming that their vehicles could suddenly accelerate, were crashing their vehicles with alarming frequency. Audi blamed drivers unfamiliar with its vehicles. Drivers could not be persuaded that they had made an error. Five recalls ensued. Whether you believe that Audi was unfairly maligned or that the regulators failed, the lessons of the past are not necessarily instructive to the problems of the present. The Bowden cable, the linchpin of mechanical throttle designs, is rapidly becoming an obsolete technology. Vehicles are now complicated interfaces where mechanicals systems are controlled by increasingly sophisticated electronics. Any examination of SUA must fully explore the interactions between the two, as well as simpler, easy-to-understand causes. This has not yet been done for the Toyota SUA incidents.

We understand that it is difficult to tease out the factors that contribute to sudden acceleration. Nonetheless, Toyota and the regulators must look more closely at the vehicle control systems, including the electronic throttle control assembly and the associated sensors. Random, intermittent electronic faults are hard to detect, but they do occur – the electrical contacts, electromagnetic interference, and the programming of the electronic controls and sensors are all possible points of breakdown or interruption in an electronic system.

Regardless of the causes of sudden unintended acceleration in Toyota and Lexus vehicles, the automaker's first step should be measures to protect the public. The implementation of a brake-to-idle feature across all model lines and years is a significant step in that direction. This design, found in many other manufacturers' vehicles with electronic throttles, will bring the engine to idle if both the brake and the accelerator pedals are applied. A significant number of motorists who experienced frightening SUA events reported that no amount of braking would stop the vehicle once it took off. The brake override allows drivers to regain control of a runaway vehicle.

So far, Toyota has only been willing to add a brake-to-idle feature on some Camry, Avalon and Lexus ES 350, IS 350 and IS 250 models as an "extra measure of confidence." This is inadequate.

We want to be clear: this problem is Toyota's own creation. For years the company has ignored or blamed its consumers. Instead of listening carefully to the safety issues consumer have presented them, Toyota has turned them away, assuring them that nothing is wrong. The company now has a duty to immediately address the unintended acceleration problems and provide its customers vehicles with appropriate failsafe designs.

With respect to NHTSA's role, we are pleased to see the new administration's willingness to step up its enforcement role and to look at the electronic issues that appear to be playing a role in unintended acceleration. It is also imperative that the Office of Defects Investigation have support from the agency's counsel to pursue the challenges they face with complex defects and that NHTSA examine its defect surveillance strategies in ways that will help them efficiently and productively use the many sources of data available to them.

Mr. STUPAK. Thank you, Mr. Kane.

Mr. Gilbert, your opening statement please. I am going to ask you to turn that mike on and pull it towards you more.

STATEMENT OF DAVID GILBERT

Mr. GILBERT. Chairman Waxman, Subcommittee Chairman Stupak, and the honorable members of the Committee on Energy and Commerce, I thank you for holding this important hearing and allowing me the opportunity to testify before you today.

Like so many of you have expressed, I have nothing against the Toyota Motor Company. They have a fine reputation of building a traditional line of very dependable vehicles. They have been very supportive of the school at which I work. I thought enough of the product brand to put my son in one.

So, with that said, a little bit about myself. I have been a technical educator involved with automotive diagnostics and troubleshooting for almost 30 years. I have been witness to many evolutionary changes over that time.

When I first began teaching at Northeastern Oklahoma A&M College, electronic fuel injection vehicles were relatively new. Over the years, automotive technologies continued to progress, from fundamental mechanical systems to more sophisticated electrical and electronic systems.

Now, as an automotive technical educator at Southern Illinois University in Carbondale, I have found electrical diagnostic skills to be supremely important in diagnosing and repairing modern automobiles and I have spent many hours studying and analyzing new circuits and components.

Based on my knowledge of real world failures in components, I purposely duplicate multiple types of electronic problems in donated vehicles for my students to study and diagnose. This provides my students with an opportunity to analyze wiring schematic, service information, and actively diagnosed problems.

SIU automotive technology graduates have found employment in virtually every aspect of the automotive industry. Students graduating from SIU have the technical skills to work closely with automotive design engineers to ensure reliable vehicle service in real world situations. I believe the exemplary student placement record is a result of the rigor of the program and the emphasis is on problem solving.

It stands to reason then that my daily teaching responsibilities would include application and understanding of electronic throttle control diagnostics. I have the unique perspective in my employment to research and study multiple vehicles and electronic throttle control system diagnostics.

In this preliminary report, my initial findings question the integrity and consistency of Toyota electronic control modules to detect potential electronic throttle control system malfunctions. The absence of a stored diagnostic trouble code in the vehicle's computer is no guarantee that a problem does not exist. I instruct all my automotive students of this fundamental statement: You can have a code with no problem, and you can have a problem with no code.

My curiosity with Toyota electronic throttle control systems began simply with a search for the truth concerning unintended ac-

celeration. I recently purchased a 2010 Toyota Tundra, and with the growing attention in the media to what seemed to be increasing events of sudden unintended acceleration, I made the decision to investigate the foundation of these claims on my own.

Based on my working knowledge of electronic throttle controls, I did not expect the system to be easily fooled without detecting a circuit fault and setting a diagnostic trouble code. It was late one evening when I made a startling discovery. Electrical circuit faults could be introduced in the electronic throttle control system without setting a code. The discovery opened a window of opportunity within the electronic throttle control system for a potential problem without a code.

Without a code set, the vehicle computer will not logically enter into a fail-safe mode of operation. All vehicle manufacturers have recognized the importance of electronic throttle control systems to perform exactly as they intended.

Since the vehicle computer will only react to defective sensor inputs outside the range of the program limitations if the circuit is defective, as far as the computer is concerned it must be good. Knowing properly operating electronic throttle control systems and components are vital to safe operation, I proceeded to investigate the problem with much more urgency.

Because of its role to accurately convey the vehicle driver demands for throttle opening, accelerator pedal sensor voltage inputs need to be confirmable by the vehicle's computer as absolutely correct. A complete or partial failure of these electrical circuits, sensors, wiring or actuators in combination with an absence of fail-safe strategies could potentially result in a runaway engine.

The importance of these issues raised in electronic throttle control system fail-safe strategies should not be underestimated. Sudden unintended acceleration of vehicles is a very serious safety concern that needs to be addressed without delay.

Thank you.

[The prepared statement of Mr. Gilbert follows:]

David W. Gilbert, PhD.
Professor of Automotive Technology
Southern Illinois University Carbondale

Testimony for the Committee on Energy and Commerce,
Sub-Committee on Oversight Investigations
Toyota Sudden Unintended Acceleration
February 23, 2010

Chairman Waxman, Sub-Committee Chairman Stupak and the honorable members of the Committee on Energy and Commerce, thank you for holding this important hearing and allowing me the opportunity to testify before you today.

I have been a technical educator involved with automotive diagnostics and trouble shooting for almost 30 years. I have been witness to many evolutionary changes over that time. When I first began teaching in 1981 at Northeastern Oklahoma A&M College, electronic fuel-injected vehicles were relatively new technology. Over the years, automotive technology has continued to progress from fundamental mechanical systems to more sophisticated electrical and electronic systems. Now, as an automotive technical educator at Southern Illinois University Carbondale (SIUC), I have found electrical diagnostic skills to be supremely important diagnosing and repairing modern vehicles. And, I have spent many hours studying and analyzing new electrical circuits and components. Based on my knowledge of real world failures of components, I purposely duplicate multiple types of electrical problems in donated vehicles for my students to study and diagnose. This provides my students an opportunity to analyze wiring schematics and service information, and actively solve diagnostic problems. SIUC Automotive Technology graduates have found employment in virtually every aspect in the automotive industry. Students graduating from SIUC have the technical skills to work closely with automotive design engineers to ensure reliable vehicle service in real-world situations. I believe the exemplary student placement record, is a result of the academic rigor of the program and the emphasis on technical problem solving.

It stands to reason, that my daily teaching responsibilities would include the application and understanding of electronic throttle control diagnostics. I have the unique perspective in my employment, to research and study multiple vehicles and electronic throttle control system designs. In this preliminary report, my initial findings question the

integrity and consistency of Toyota Electronic Control Modules to detect potential electronic throttle control system circuit malfunctions. The absence of a stored diagnostic trouble code in the vehicle's computer is no guarantee that a problem does not exist. I instruct all my automotive students with this fundamental statement: You can have a code with no problem - and a problem with no code.

My curiosity in the Toyota electronic throttle control system began simply with a search for the truth concerning sudden unintended acceleration. I recently purchased a 2010 Toyota Tundra, and with the growing attention in the media to what seemed to be increasing events of sudden unintended acceleration, I made the decision to investigate the foundation of these claims on my own. Based on my working knowledge of electronic throttle controls, I did not expect to the system to be easily fooled without detecting a circuit fault and setting a diagnostic trouble code. It was late one evening when I made a startling discovery; electrical circuit faults could be introduced into the electronic throttle control system without setting a diagnostic trouble code. This discovery opened a window of opportunity within the electronic throttle control system for a potential problem with no code.

Without a diagnostic trouble code set, the vehicle computer will not logically enter into a fail-safe mode of operation. All vehicle manufacturers have recognized the importance for electronic throttle control systems to perform exactly as they intended. Since the vehicle computer will only react to defective sensor inputs outside of the range of programmed limitations if the circuit is not defective; it must be good. Knowing that properly operating electronic throttle control system circuits and components are vital to safe vehicle operation, I proceeded to investigate the problem with more urgency. Because of its important role to accurately convey vehicle driver demands for throttle opening, accelerator pedal sensor voltage inputs need to be confirmable by the vehicles computer as absolutely correct. A complete or partial failure of these electrical circuits, sensors, wiring, or actuators in combination with an absence of fail-safe strategies could potentially result in a runaway engine.

The importance of these issues raised in the electronic throttle control system fail-safe strategies should not be underestimated. Sudden unintended acceleration of a vehicle is a very serious safety concern that should be addressed without delay.

Vehicle manufacturers clearly recognized the important requirement for ETC systems to perform exactly as they intended. A failure of the electrical circuits, sensors, wiring, or actuators could potentially result in a runaway engine. Electronic Throttle Control (ETC) systems needed the added redundancy of certain sensors and electrical circuits to ensure safe and reliable operation. In addition, the ECM's were programmed to detect operational abnormalities or defects in ETC components and their related electrical circuits. The intent was to build an ETC system that would always fail-safe in the event of potential problem.

The purpose of my research study was to contribute to a better understanding of electronic throttle control system malfunctions and the fail-safe detection capabilities of selected vehicles equipped with electronic throttle controls. More specifically, this research examined the fail-safe detection capabilities of electrical circuitry designed to prevent sudden or unintended acceleration of electronic throttle controlled vehicles manufactured by Toyota Motor Co. The Accelerator Pedal Position (APP) sensor was identified in the review of manufacturers' service literature as a significantly important ETC input for all vehicles used in the study. Since vehicle driver demands are electrically conveyed through this high priority sensor, basic testing was focused on the APP sensor, voltages, and associated wiring circuits. A secondary purpose was to identify areas of further research of ETC fail-safe detection capabilities of Toyota Motor Co. vehicles and other vehicle brands. This limited analysis attempted to identify and characterize potential safety concerns of Toyota Motor Co. vehicles, as well as other vehicle manufacturers using electronic throttle control systems.

After completing preliminary tests for Accelerator Pedal Position (APP) sensor signal voltages for the Toyota Electronic Throttle System I examined, it was determined that Electronic Control Module (ECM) malfunction detection strategies were not sufficient to identify all types of fundamental APP sensor and/or circuit malfunctions. Some types of Electronic Throttle Control (ECT) circuit malfunctions were detectable by the ECM, and some were not. Most importantly, the Toyota detection strategies were unable to identify malfunctions of the APP sensor signal inputs to the ECM. APP sensor signal circuits must be undeniably correct to electrically convey the appropriate driver commands to the ECM.

With the two APP sensor signals shorted together through a varying range of resistances, all four Toyota vehicles tested thus far reacted similarly and were unable to

detect the purposely induced abnormality. The types of signal faults introduced into the APP circuit should have triggered the vehicles' ECM to illuminate a warning lamp within seconds. The ECM should have then set a Diagnostic Trouble Code (DTC), entered the vehicle fail-safe mode, and reduced engine speed and/or power. When the two APP signal circuits are shorted together, the redundancy of the APP circuit design is effectively nullified and lost. In other words, neither of the shorted APP signal circuits can be verified by the ECM as either; correct or incorrect. The condition then exists for a serious concern for driver safety. In the tested Toyota ETC vehicles, incorrect or corrupted APP sensor signal inputs could potentially result in unwanted engine speeds. Additional research should be done to determine if other vehicle manufacturers may have similar inconsistencies in ETC circuit fault detection.

Using shorted APP signal circuit fault conditions purposely installed on the test vehicles, and with known resistance values that would not set a DTC, vehicle operational behaviors were also noted. It was observed that all test vehicles could be operated without the ECM detecting the induced malfunction. Depending on the resistance value of the APP signal circuit fault, a vehicle may or may not experience noticeable changes in accelerator pedal operational behavior. Observed accelerator pedal operational characteristics included: normal response, sluggish response, and travel with inconsistent engine speeds. It is conceivable that a driver of an ETC vehicle may not notice that an APP sensor and/or circuit malfunction currently exists. Without the aid of an illuminated MIL, a driver could be unaware of electrical problems within the ETC system. In addition, the shorted APP signal circuits were connected momentarily to the sensor's five-volt supply circuit with the vehicle in drive. In all test vehicles, the ECM did not set a DTC and the engine speed increased rapidly to full throttle. This result shows that unusual or sudden unintended acceleration of the vehicle was possible in the ETC test vehicles. It should be noted that in all test vehicle cases, the electronic throttle valve instantaneously moved to wide-open position when the fault was introduced. More research should be done to determine the extent of Toyota ETC vehicles that could be affected by this condition.

In review of the Toyota service information, collected vehicle data, and performance observations; some general assumptions can be drawn from the research completed to date. The inability of the Toyota ECM to detect certain types of short circuit malfunctions could fall back to the basic design of the normal APP signal voltage limitations. The parameters

for APP signal short circuit fault detection are apparently too lenient. In the Toyota ETC system, the APP sensor signal voltages rise simultaneously in direct response to accelerator pedal depression. With this design, interconnected signal circuits could be more difficult to identify with a circuit fault detection strategy that uses only threshold voltage limitations.

In this preliminary report, the initial findings question the integrity and consistency of Toyota ECMs to detect potential ETC system circuit malfunctions. The importance of these issues raised in the ETC system fail-safe strategies should not be underestimated. While the small sample of Toyota vehicles cannot be representative of all, these primary findings most certainly warrant further investigation and study. Additional Toyota vehicles of different build years and models should be evaluated for their capabilities of ETC system circuit malfunction detection.

A second recommendation should be a thorough technical investigation and evaluation of ETC fail-safe strategies of Toyota, and possibly other vehicle manufacturers, that experience sudden unintended acceleration that do not appear to be caused by floor-mats or sticking pedals. Priority would be studies of identified vehicles with a high incidence of ETC system related incidences, concerns, or failures involving sudden unintended acceleration.

Mr. STUPAK. Thank you, Mr. Gilbert.

That concludes the testimony. We will go to questions. I am going to start with the chairman of the full committee, Mr. Waxman, please.

Mr. WAXMAN. Thank you very much. I want to thank all the witnesses for your testimony on this first panel.

Toyota has maintained over and over again that it is not the electronics. It is not the electrical system. There are other reasons to explain the sudden unintended acceleration. But the only document that they gave us to address the phenomenon of sudden unintended acceleration in a systematic way was a report from this month done by an outside engineering consulting firm called Exponent. And we have asked people to evaluate Exponent's analysis, and they said it was not a very good analysis. In fact, they thought it failed to follow a scientific—it failed to stand up to a scientific evaluation. So if Exponent's analysis doesn't adequately explain things, we need to find another explanation.

Now, we are going to hear from Mr. Lentz, and he is going to say to us that we have designed our electronic throttle control systems with multiple fail-safe mechanisms to shut off or reduce engine power in the event of a system failure; we have never found a malfunction that caused unintended acceleration. That is Mr. Lentz's testimony. We are going to hear it in a little bit.

Dr. Gilbert, you have given us a preliminary report. You looked at an alternative explanation to test this hypothesis. Briefly and in layman terms, what did you find, that it is possible to have electronic failure?

Mr. GILBERT. First off, it requires a thorough understanding of the system. The accelerator pedal position sensor input into the PCM is an input directly from the driver. If that circuitry or if that sensor is in error, then it is quite possible that that command that is being given to the vehicle's onboard computer will be accepted as a valid request to open the throttle. As a result of that, that is where I focused my investigation at the very beginning.

Mr. WAXMAN. Well, they have a fail-safe built in. Are you saying the fail-safe failed?

Mr. GILBERT. The fail-safe will only come into play if the vehicle's onboard computer is able to detect a fault in the circuit. What my preliminary findings have shown is that there is a large amount of leniency in the programming of the fail-safe strategies that will allow certain abnormalities to occur without the vehicle's onboard computer being able to detect that a fault exists.

Mr. WAXMAN. Is this like an electronic short between two pedal sensors that could override the fail-safe, meaning that a failure would not be read as an error and would not cut off engine power in a sudden unintended acceleration situation?

Mr. GILBERT. It could be interpreted as a short. Yes, it could.

Mr. WAXMAN. So, in other words, you discovered a scenario where a failure in Toyota's accelerator pedal sensors would not trigger an error code and would not cut off the engine power in the event of a failure. How long did it take you to discover this problem? Did you spend millions of dollars and spend years studying it?

Mr. GILBERT. Well, if I might say, after 30 years of automotive technology teaching and electronic engine controls, I discovered it in about 3–1/2 hours.

Mr. WAXMAN. Three-and-a-half hours.

Mr. GILBERT. Yes.

Mr. WAXMAN. And how much money did this take for you to spend to come up with this conclusion?

Mr. GILBERT. With the equipment that I had on hand, basically very little, if anything.

Mr. WAXMAN. Well, it is really astounding, because what you are describing are findings for us that relate to reports of sudden unintended acceleration, and my understanding is that you did this but Toyota did not. Did you report your findings to Toyota and have you heard from the company about your report?

Mr. GILBERT. Yes, sir, I did. I placed a call to Toyota in California through the channels that I knew, and days went by without a reply. Eventually they did call me back and I talked with I am told some engineers with Toyota, and I told them exactly what I had done and expressed my concern for this type of a problem.

And in that conversation I told them, specifically I said what I have done is I have introduced a fault within the electronic system that should have been detected as a circuit fault, set a DTC and reduced engine power.

Mr. WAXMAN. Can we say with certainty that what you concluded is the absolute cause for the sudden accelerator problem?

Mr. GILBERT. No, sir. What this does is this opens the opportunity to have other problems occur without detection.

Mr. WAXMAN. So the essential point here is that if Toyota didn't believe this could happen, they didn't look for it. They looked for other explanations. The driver was stepping on the pedal. The floor mat was a problem. The pedal was sticky. They didn't look at the fact that the electronic throttle might have been a problem because they had a fail-safe, but they didn't look to see if the fail-safe failed.

Mr. Chairman, I just think that we need to look at all the explanations and not put blinders in the way, which Toyota apparently did, in trying to assess the reason for serious problem in many of those vehicles.

Thank you very much.

Mr. STUPAK. Thank you, Mr. Waxman.

Mr. Barton for questions.

Mr. BARTON. Thank you, Mr. Chairman. I want to ask some questions of Mr. Gilbert, but I want to ask Mr. and Mrs. Smith some questions first.

I listened to your testimony or watched it on television in my office, so I have been participating visually in the hearing, even though I haven't been here in person.

Mrs. Smith, when your car was going down the highway, it just kind of went crazy, that is a very non-technical term, and you apparently did everything you could. You tried to put it in neutral, you tried to turn the engine off, you put both feet on the brake, and it just kept going, isn't that right?

Mrs. RHONDA SMITH. That is correct.

Mr. BARTON. And somehow God intervened and it slowed down and you finally got out of the car. When you called the Toyota people to come, did they take physical possession of your car?

Mrs. RHONDA SMITH. We didn't call the Toyota people.

Mr. BARTON. You didn't call the Toyota people?

Mrs. RHONDA SMITH. No. We just called—we had AAA.

Mr. BARTON. Did anybody inspect the car to see if there were physical cuts in the wiring or somehow the electrical components had been shorted out? Did anybody do that inspection?

Mr. EDDIE SMITH. May I answer that? I was in my vehicle trying to catch up with her, which was impossible, or just at least to be there. When I got there, she was still sitting in the vehicle. I inspected what a man would normally inspect to see if there was anything wrong, which includes floor mats, and this was not a floor mat problem.

My answer to your question is we had the car towed to Sevierville and then directly to the Lexus dealer in Kingsport, Tennessee, on a rollback wrecker. No one touched the vehicle until it got to the Lexus dealership. Now, were there wires cut or were there not wires cut?

Mr. BARTON. I am not insinuating anything.

Mr. EDDIE SMITH. We don't know.

Mr. BARTON. I will stipulate your testimony is credible, you had a runaway vehicle. It wasn't caused by a floor mat problem. It wasn't caused by you putting your foot on the pedal and going to sleep. Something went wild in your car.

Mr. EDDIE SMITH. Yes, sir.

Mr. BARTON. So what I am trying to figure out is based on what Mr. Gilbert said, he has created some sort of a fault situation in the electronics, and I was just interested if anybody inspected your car after the fact to see if in fact there was a short circuit. And, again, I looked under the hood of a Toyota yesterday, and there is so much stuff under there now, I couldn't work on one if my life depended on it. But I would assume if Toyota actually inspected your car, they would have torn the thing apart trying to find out what the problem is. Did that happen?

Mr. EDDIE SMITH. Mr. Lamont, he was the field technician for Lexus that was sent to Kingsport. His report back to us was there was nothing wrong with it.

Mr. BARTON. Mr. Chairman, has my time already expired?

Mr. STUPAK. Go ahead, Mr. Chairman.

Mr. BARTON. Because I see I am minus 4 minutes and 20 seconds.

Mr. STUPAK. No, go ahead.

Mr. BARTON. OK. Now I want to go to Mr. Gilbert. The minority has not had an opportunity, the minority staff, to interview you. We only found out you were going to testify late yesterday afternoon. But it appears just looking at your biography that you are very credible and respected in the industry.

If I understood what you said, you decided on your own to look into this, or did Toyota approach you and ask you to look into this?

Mr. GILBERT. I did this on my own.

Mr. BARTON. You did this on your own.

Mr. GILBERT. Yes, sir.

Mr. BARTON. And you actually went out and bought a car, or you got access to a car?

Mr. GILBERT. I should explain a little bit. Toyota Motor Company has been very generous with vehicle donations. We had a number of Toyota vehicles in the fleet, and they are listed in the report, that were donated for educational purposes, and those were at my disposal. So one of the first vehicles that I looked at was a 2007 Toyota Tundra, which is similar to the vehicle I purchased. And that was part of my interest.

Mr. BARTON. You got access to some Toyotas.

Mr. GILBERT. Absolutely.

Mr. BARTON. From what little minority staff and myself have been able to evaluate your testimony, you are saying that there could be some sort of an electronic physical fault in the electronic system, a physical impairment that would cause an electric circuit malfunction? Or are you saying there is a physical defect, an actual impairment in terms of a cut or some sort of a friction point that gets thin and there is a short that occurs because of that?

Mr. GILBERT. First of all, you have to understand a little bit about the fail-safe strategies that they have in place for all accelerator pedal position sensors that vehicle manufacturers put on.

Typically they try to run circuitry that is redundant. In other words, if you look in the preliminary report, you can see an example of this. They run separate—they actually have two signal circuits within the pedal position sensor itself. Each has their own power supply, each has their own ground circuit, and each has their own signal circuit back. The reason for that is so that one circuit is able to verify the integrity and work with the other.

Do I make myself clear?

Mr. BARTON. I took electrical engineering. I made C's, but I did take it.

Mr. GILBERT. OK, great. It is like having a witness. One signal is a witness for the other to make sure that both are exactly on track so that whatever is being sent to the vehicle's onboard computer is exactly correct.

OK. With that said, if for some reason that circuit becomes compromised, shorted to power, shorted to ground, or shorted signal-to-signal, then at that point you should be able, within the vehicle's computer, to detect that circuit abnormality and set a DTC. That would allow the vehicle to turn on an MIL, or a malfunction indicator lamp, warn the driver, and——

Mr. BARTON. Well, there should be, to be non-technical, if something starts going wrong in the circuitry, there should be a default program that stops the engine.

Mr. GILBERT. Exactly. And that is the other thing that happens.

Mr. BARTON. Applies the brake. That is what the Toyota engineers told me. They said if something goes wrong, we give the brake circuit power over the accelerator circuit so that it stops the car. That didn't happen in Mr. and Mrs. Smith's case.

Mr. GILBERT. That is not true with all Toyota vehicles at this point. They are in the process of reprogramming their vehicles' onboard computers to introduce into this this fail-safe characteristic. It is important to note that the fail-safe is going to be looking at two driver inputs instead of just one from the accelerator pedal.

Logically, why would you be driving down the road at 60–65 miles an hour or maybe even faster with your foot on the brake and your foot on the accelerator pedal at the same time?

Mr. BARTON. Well, logically you shouldn't. But if something——

Mr. GILBERT. Logically you should not. But if something was to fail, I am looking at intuitively for people driving, when something fails like that and your vehicle starts to accelerate on its own, your first intuitive thing is to step on the brake. So at that point, if we have an incorrect signal going into the vehicle's onboard computer, plus the application of the brake, the PCM would say hey, we have got a problem, shut her down.

Mr. BARTON. Right. And that didn't happen in their case. I know my time has about expired. Last question, and hopefully we can really get into this later in detail.

To do the test that you did, did you physically impair the electronics of the cars you tested in any way?

Mr. GILBERT. As far as changing their driving characteristics, no.

Mr. BARTON. I am talking about to create these faults or shorts, did you cut anything?

Mr. GILBERT. No, sir. The only thing that we did was we tapped into the accelerator pedal position sensor circuits so we could monitor voltages and modify those circuits in such a way that we could manipulate, if you would, the signals going to the onboard computers.

Mr. BARTON. But in layman's terms, your hypothesis is it is possible there could be a computer malfunction, and it is possible if they don't have this default mechanism that overrides it, in the absence of the computer knowing exactly what to do, it just doesn't do anything——

Mr. GILBERT. It takes the command.

Mr. BARTON. —and the renegade signal runs away?

Mr. GILBERT. It takes the command as one that is valid, and as a result of that it opens the throttle.

Mr. BARTON. Thank you, Mr. Chairman.

Mr. STUPAK. Thank you, Mr. Barton.

Mrs. Smith, let met ask you this question, if I may. When you were driving down the highway and your vehicle was a runaway vehicle, you said you put your vehicle in reverse?

Mrs. RHONDA SMITH. Yes.

Mr. STUPAK. And what happened when it went into reverse?

Mrs. RHONDA SMITH. Nothing.

Mr. STUPAK. Mr. Smith, was the transmission ripped up or anything when you got the vehicle? I mean, if you are going close to 100 miles an hour and you throw your vehicle into reverse, you are going to be dropping your transmission.

Mr. EDDIE SMITH. My suggestion to her was to put it in reverse, hold on, and hopefully the transmission will yank loose and you will survive the crash. No, sir, the transmission didn't yank loose.

Mr. STUPAK. Let me ask you this then. You also state in your testimony that when the wrecker driver, you were standing back there, you went to put it in neutral.

Mr. EDDIE SMITH. Yes, sir.

Mr. STUPAK. And the vehicle started up?

Mr. EDDIE SMITH. Yes, sir. It attempted to start with me.

Mr. STUPAK. The engine started up.

Mr. EDDIE SMITH. Yes.

Mr. STUPAK. Should it start as a general rule in neutral?

Mr. EDDIE SMITH. It absolutely will not.

Mr. STUPAK. But you didn't have the fob, right?

Mr. EDDIE SMITH. That is exactly right.

Mr. STUPAK. Mrs. Smith, in your testimony you have attached the documents provided to the committee in Exhibit B in which you received a response from Toyota, is that correct?

Mrs. RHONDA SMITH. The response from Toyota about the——

Mr. STUPAK. Dated December 4, 2006. It was from Toyota sent to you and your husband on your complaint, is that correct?

Mrs. RHONDA SMITH. Yes.

Mr. STUPAK. And in there do they say if properly maintained the brakes will always override the acceleration?

Mrs. RHONDA SMITH. That is what it says.

Mr. STUPAK. OK. And in this case, they talked about your incident. Two totally different systems would have to fail at exactly the same time, the throttle linkage and the brakes, and if properly maintained the brakes would always override the acceleration. Is that what they told you?

Mrs. RHONDA SMITH. That is the letter I got. That is what they told me.

Mr. STUPAK. All right. Mr. Gilbert, Dr. Gilbert——

Mr. GILBERT. Yes, sir.

Mr. STUPAK. You heard the Smiths' testimony. You heard their incident. In order for it to occur as the Smiths said, would two totally different systems have to fail at exactly the same time, the throttle linkage and the brakes? Can you defeat those systems?

Mr. GILBERT. Without actually looking at the transmission and what is allowable under normal conditions, it is possible that at that high a speed, for safety reasons, because obviously if you go down the road and throw your transmission in reverse, it is not a very good thing, that may not have been allowed by the transmission controls.

Mr. STUPAK. OK.

Mr. GILBERT. So it is possible that maybe reverse wasn't a good choice.

Mr. STUPAK. Was or was not a good choice?

Mr. GILBERT. Was not. Neutral would be my choice.

Mr. STUPAK. But she already did that. That didn't work.

Mr. GILBERT. You know, I don't know now exactly how that could happen.

Mr. STUPAK. Without an override.

Mr. GILBERT. Well——

Mr. STUPAK. I guess what I am trying to get at, you have I believe they say there are four fail-safe systems here in these Toyotas. So having been a police officer and spent a little time doing this, if I am going 100 miles an hour and I throw something in reverse, my car is coming to a halt. And you are right, there is going to be a pretty good crash, and I hope I can survive. That didn't work here. So obviously something is wrong here.

Mr. GILBERT. I can't answer exactly what happened in her case without——

Mr. STUPAK. When your car is on a wrecker and you come to put it until neutral so you can tow it, the engine should not start up and start revving, should it?

Mr. GILBERT. No, sir, it should not.

Mr. STUPAK. OK. So besides all these electronics, we've just got some basic mechanics, at least in this car, that's not working.

Mr. Kane, you said you went to the public record and looked at NHTSA's public records; and you saw 2,263 incidents, if you will, of sudden unintended acceleration. Half of those could not be explained away or, if my math is pretty good, that's 1,131 cases can't be explained away. So if it's not the pedal sticking, if it's not the mat, what else can it be under this electronic throttle control system? What else is left? Electronics, right?

Mr. KANE. I think that when we look at the complaints and you eliminate the physical impediments that could possibly cause this—and in this case remember the physical impediments are very limited because we have all electronics controlling these cars—and you rule out the driver error issue, you have only one thing left, which is the control systems of these cars.

In interviewing many, many consumers and in reviewing incidents of complaints what we are seeing are incidents that cannot be explained by either one of the sticky pedal or by the floor mat recall simply because the drivers and witnesses have often seen this, including folks who have actually brought them to Toyota dealers, and the dealers have witnessed the cars racing without any driver, without any floor mat interference, and without any sticky pedal.

Mr. STUPAK. So for these 1,130-some incidents you have sort of ruled out the physical part.

Mr. KANE. You can never conclusively rule out physical just from all of those complaints, but certainly the evidence suggests very strongly that there is more going on.

Again, one of the things that has happened in this crisis is the consumer voice has been tamped down. You heard from the Smiths. Their story is very similar. What they report they are told is not credible. Consumers' complaints have been used against them, saying it's not credible. These are scenarios where folks get into this, are urgent, and people certainly can make mistakes. But there are too many problems that continue to be reported by consumers that are consistent and can't be explained away as simply driver error or some kind of physical impediment.

Mr. STUPAK. Thank you. Thank you for your testimony.

My time has expired. Mr. Burgess for questions.

Mr. BURGESS. Thank you, Mr. Chairman.

Again, thank you to the Smiths for sharing your very compelling story with us. I've always wondered what would happen if I inadvertently went into reverse going down the road. I have always been fearful of accidentally doing that. Now to understand that nothing happens, I guess—I don't know that I am mollified by that.

Mr. Gilbert, let me ask you a question on this. You said that you did these tests that you and Mr. Barton just went through and that you concluded that this may be a very serious problem.

Mr. GILBERT. Yes, sir.

Mr. BURGESS. And you called Toyota and they took some time getting back to you. But they did get back to you?

Mr. GILBERT. They got back with me. I explained the situation in detail. I told them even, you know, a resistance value for them to begin testing with. They asked me for that. So I gave it to them. And they said that they would look into it and get back with me. But, of course, I have not heard back from them to date.

Mr. BURGESS. So what was the length of time between the moment the light bulb went off above your head and Toyota got back with you about getting more information?

Mr. GILBERT. First off, I wanted to be careful that I wasn't crying wolf; and so I wanted to make sure that what I had found was repeatable. And, of course, I wanted to look into the literature to see how in the world could this possibly fall within the guidelines of setting a DCT.

In addition to that, I wanted to test it on another vehicle. I should say for the record that the Toyota Tundra that we worked on was clearly labeled as a prototype. So, as a result of that, it could be somewhat different. So I tried it on another vehicle and had very similar results. And at that point I became very alarmed.

Mr. BURGESS. So from that point to the point where Toyota gets back with you, what's the time interval? What are we talking about?

Mr. GILBERT. Probably a matter of a few days.

Mr. BURGESS. A few days. Were you satisfied with the response you got from Toyota after talking with them?

Mr. GILBERT. Initially, you know, I expressed a concern. Days went by, and I didn't hear a response back. But then I did, and the gentleman I spoke with at Toyota had set up a conference call with some design people to look into it. He took it very seriously or, you know, expressed his concern.

Mr. BURGESS. Well, if you weren't satisfied that things were proceeding with correct dispatch, at any point did you consider calling the Federal agency, the NHTSA folks?

Mr. GILBERT. Actually, almost simultaneously with that, I sent an electronic letter to NHTSA to their hotline.

Mr. BURGESS. And——

Mr. GILBERT. And also a written letter.

Mr. BURGESS. And——

Mr. GILBERT. And it was registered to——

Mr. BURGESS. And their response to you was——

Mr. GILBERT. I have not—I got a response back on the electronic version. It said, you know, thank you very much for your concern, and we'll look into it.

Mr. BURGESS. So, to the best of your knowledge, they've not duplicated your tests at this point? Or——

Mr. GILBERT. I'm not sure what——

Mr. BURGESS. Let me ask you a question. We hear this compelling story of this harrowing high-speed chase down the freeway. And what would you expect to see? If you were called on the scene after the car was pulled away to the resale lot, what would you expect to see? Would you expect to see—like is there like a bundle of wires? Are there cable holders? Would you expect some chafing? Or what would you be looking for to see the real-world—how the

real-world event occurred with the theoretic that you produced in the laboratory?

Mr. GILBERT. If I may, I will use an analogy that I use in class a lot of times. If you're sitting at home watching your television and that television screen blinks, do you take it in for a repair? No, you don't. How come? Well, it just blinked once.

Mr. BURGESS. Problem solved.

Mr. GILBERT. However, if you are dealing with electronics on a car and it blinks once, it could be a very serious thing. And in this case it might have blinked.

Mr. BURGESS. But I guess, if I understood your answers to Mr. Barton's questions, there would have to be some breach in the insulation, there would have to be two wires coming in contact with each other, or could this all be the fault of the computer chip and the logic employed therein?

Mr. GILBERT. If you reviewed the service information, you will see that typically, you know, what is our problem? Our problem is is we need to ensure that the integrity of what is being sent to the computer is consistent with what's being done and everybody is on the same page. So the problem lies in where does the problem lie? It can actually be in a number of places. It could be within the sensor itself, the APP sensor itself. It could be in the wiring itself.

Mr. BURGESS. Would there be any diagnostic feature where someone could look at that and say, here is a problem with the sensor?

Mr. GILBERT. Possibly.

Mr. BURGESS. The problem being a breach in insulation or a——

Mr. GILBERT. It could be, but it may not be an obvious problem. It may be something that is in a microchip somewhere that's malfunctioned. If you will—if you will look at the report——

Mr. BURGESS. Yes, here is our problem. We just got your stuff really late in this sequence, like 10:13 this morning.

Mr. GILBERT. If you will look, please, on page 5.

Mr. BURGESS. Of which document am I looking at?

Mr. GILBERT. At the preliminary report. There should be a picture there similar to this. Can you see it?

Mr. BURGESS. We're there.

Mr. GILBERT. If you will look at the printed circuit board, if you will, that is a microchip. Essentially both of those electronic circuits are contained within that small tiny chip. I am told by Toyota—when I talked with them, I asked a question. I said, are those two separate circuits within that microchip? They assured me that it was. Those are in very——

Mr. BURGESS. I'm going to break you off. I have gone too long. The Chairman's going to smack me.

Have you done this on any other make or model of car besides Toyota products?

Mr. GILBERT. As far as this type of test?

Mr. BURGESS. Yes.

Mr. GILBERT. Absolutely.

Mr. BURGESS. And——

Mr. GILBERT. They are able to detect a circuit abnormality almost instantly.

Mr. BURGESS. And what is it about the Toyota design that doesn't allow it to detect that abnormality, the proximity of the two sensors?

Mr. GILBERT. I would say it's not so much the proximity of the two sensors but the strategy that they use to detect circuit faults between the two. These two voltages rise together on a plane as you increase the accelerator pedal opening. As a result of that, if they're somehow interconnected—because these are signal circuits. It's all about voltage. And if these two are somehow interconnected through a resistance or a defective chip or chafed wiring a bad connection, you know, I don't know. I need to have a vehicle that's actually failed to investigate further under normal conditions.

Mr. BURGESS. And have you had the opportunity to inspect a vehicle like the Smiths that has actually failed?

Mr. GILBERT. No, sir, I have not.

Mr. BURGESS. I know our time is up. Let me ask you, Mr. Chairman—and I realize I am just the acting ranking member, so I don't know the rules very well. But we did just get Mr. Gilbert's testimony very recently. Would it be permissible to ask him to remain with us through not the next panel but the panel after that and perhaps some things will come up when Mr. Lentz testifies that we would like to get clarification and Mr. Gilbert would be able to participate in that? Would that be permissible?

Mr. STUPAK. I'm not going to guarantee we're going to call Mr. Gilbert back. I'm not sure what his plans are.

But time is up. We're going to the next one. If Mr. Gilbert wants to stay around, there would be a possibility to recall. That would take unanimous consent of the committee to do that.

Mr. BURGESS. Thank you.

Mr. GILBERT. I would be more than happy to stay.

Mr. STUPAK. Mr. Dingell for questions.

Mr. DINGELL. Mr. Chairman, thank you. No questions at this time. I would like to express my sympathy and condolences to the panel members who have suffered personal or family losses.

Mr. STUPAK. Mr. Gingrey for questions, please.

Mr. GINGREY. Mr. Chairman, thank you, and for Mr. Kane and Mr. Gilbert. But, also, I want to express my gratitude to the Smiths for being strong and brave and coming before the committee and explaining to us the harrowing experience that you went through, Mrs. Smith.

Listening to Mr. Gilbert, it's almost like I am thinking of Marisa Tomei in My Cousin Vinny as you started explaining some of these things to us about what happened to the car. I feel like the judge, actually, listening to that testimony.

Can either of you please explain the differences between the electronic throttle control system used by Toyota and those used by other makes which also have the electronic throttle control system? Is there any unique difference?

Mr. GILBERT. The most unique thing that I detected with the throttle—the accelerator pedal strategy, if you will, for verification of the two signals is the fact that those two signals rise on the same plane in unison, separated by a given amount of voltage.

I might also add that that difference between those two voltages is very, very small according to their—is allowed to be almost ex-

actly, if you will, the same voltage. So they only have to be separated by 2/100 of a volt to still be considered by the vehicle's onboard computer as correct.

With that said, if you look at some other vehicle manufacturers—and one of the first electronic throttle systems that I investigated was one that was made by Honda, and I actually did some training in Atlanta, Georgia, for the Honda training instructors where I investigated how it worked, fail-safe properties and that sort of thing, and basically gave the Honda instructors some information so that they could use it in their class. As a result of that, I was able to look at a lot of differences between the two.

The thing that's interesting—and if you will look, there is—I did include a different—if you look on page 13, there is, you know, an example of the rising planes for Toyota. And then if you look at the very next page in the upper right-hand corner, that is a typical example of what you might find on a Ford or a Honda or some other manufacturers—significant difference between that.

Mr. GINGREY. Mr. Gilbert, you are getting me a little bit confused. I was just simply going to ask you to tell me what a ute was.

Let me go ahead. Toyota maintains that their electronic throttle control has built-in redundancies and sensors and that if there was a problem with a sensor, the car's computer would recognize the different signals and it would go into this so-called fail-safe mode.

Mr. GILBERT. Yes, sir.

Mr. GINGREY. Can you identify a point where Toyota should have realized that the problems the cars were experiencing were not mechanical but they were probably electrical? What is the signals that Toyota missed in this instance?

Mr. GILBERT. If I might refer to the Exponent report, one of the things that I thought was interesting about that report was the very thing that I did to introduce a fault within the system was exactly the thing that they left out of their report. They did 19 tests but they did not do a circuit analysis of a short between the two circuits, between the two signal circuits, and that was one of the things that I did very up front was to see if those two circuits could be somehow intertwined or interconnected.

The reason I did that was because they rose on the same plane of voltages. If I would have done that on a Buick or a Honda, it's quite possible that that vehicle's CCM, as soon as it detected any sort of connection and saw those two voltages not operating within their normal plane of operation, it would have set a DTC or a code.

Mr. GINGREY. Either Mr. Kane or Mr. Gilbert, is Exponent involved in your talks with Toyota?

Mr. KANE. I don't believe they were involved. They may have been on the phone. We don't know.

If I can just step back, because I think that we can help answer your question in looking at is the Toyota system different from other electronic control systems. I think what Dr. Gilbert has identified is in fact, yes, it is. It's different in a couple of key ways.

First of all, it's different in the way it's designed. Its very strategy and how they detect error codes has a wide window of opportunity where errors can be introduced into that wide window without setting an error code. This is in stark contrast to some of the other cars that have been examined.

Now again, the report is preliminary. Dr. Gilbert has been working literally around the clock to help document as much as is possible. What he has found so far is other manufacturers' cars do not have that same strategy. They employ a multitude of other strategies to ensure that a DTC is set so the error code is in fact set under these conditions so you don't, in other words, load that gun. Because what Toyota has in their system is essentially a sensor that goes into nonfail-safe. So whatever happens to that sensor, whatever that sensor reacts to, the computer is just going to do what it says because there is no fail-safe any longer. So there is an outlier.

Mr. BRALEY [presiding]. We have a lot of witnesses on our second panel, and we really need to move as quickly as we can. And you have a right, Mr. Gingrey, to submit additional questions, and we will attempt to get those answered, if you prefer.

The Chair recognizes Mr. Rush at this time for 3 minutes.

Mr. RUSH. Thank you, Mr. Chairman.

Mr. Kane, how many years have you been following this area of concern here? How many years have you been following the issues surrounding automobile safety?

Mr. KANE. Well, I started this work back in 1991 at the Center for Auto Safety; and sudden unintended acceleration has been a controversial and difficult issue since the very day I stepped into this problem.

Mr. RUSH. As recently as last month, you released a comprehensive report regarding NHTSA's history and pattern of treatment of sudden unintended acceleration. Is that correct?

Mr. KANE. That's accurate.

Mr. RUSH. I want to note that your study reached similar conclusions as this committee's preliminary investigation, and that is that NHTSA did not prioritize consumer concerns about certain unintended acceleration and did not conduct thorough investigations into the possible causes of these incidents. Do you concur with that conclusion?

Mr. KANE. Yes, I do agree with that. I think when you look at what happened—and I don't take lightly my criticism of the agency, because, frankly, I have worked very closely with a number of the folks in the defects office. They work very hard. They have an impossible job. They are always chasing a constantly moving technological environment that is moving at a rapid pace beyond, oftentimes, what their resources allow them to deal with.

Mr. RUSH. Thank you. And I totally concur with that.

But my question is, under the current authority that NHTSA has, what more could NHTSA have done to protect consumers in this area? And what is it you would like for them to do?

And following that question, are there answers that you would like NHTSA to take but that they may not be legally authorized to do? What can we do as we look forward to reauthorizing NHTSA to making them a leaner, meaner fighting machine for the American consumer?

Mr. KANE. That's a real good question. We've looked at this very closely, and I can say that one of the things that really needs to happen, because we often are evaluating data NHTSA has as well and we can reach some different conclusions—but at the end of the

day, I think they really need to pay close attention and use the tools that are already there.

I think a number of errors were made in the process of these investigations, not so much that the tools weren't available as much as the tools were not employed. When we looked, for example, at surveillance systems like the early warning reporting system that this committee was involved in following Firestone, the use of that data in a meaningful way would have triggered some investigations into the electronic throttle control.

Doing statistical analyses of the complaints like we did with the quality control systems folks, their analyses have given us—again, the very public data we have access to have given us the tools to look in the right direction. So it's the informed information we use to then go do our investigations and I think that those tools need to be employed more properly and the consumer voice has to be heard.

This is a very controversial issue. Since day one when I started working on these issues sudden acceleration has consistently been blamed on drivers. We have a report from NHTSA from 1989 that was thrown out in response to a most recent defect petition. That report, frankly, is irrelevant to today's technology in the fact that it really points mostly to driver error issues.

We have to listen to the consumers, what are they saying, and listen carefully. I think what we've heard in our interviews with many consumers who experience firsthand NHTSA investigators, the NHTSA investigators came in with a very preconceived notion that this could not possibly happen. They took Toyota's word for what happened that this can't possibly happen, and that's really what concerns us is that the investigations need to be open-minded without the preconceived notion and the tools need to be in place and, furthermore, the counsel at the agency must be willing to sink their teeth into complex issues even though they may take time and a great deal of effort to pursue to get to an end.

Mr. RUSH. Does NHTSA have the authority, do they have the personnel, do they have the resources to accomplish what you have laid out in your opinion?

Mr. KANE. Clearly, the agency is always the underdog here, and we certainly—I can empathize being an underdog in a small company, working against the tide. You have to really use your resources well. And I know the agency struggles with that. They certainly could use the technological expertise or certainly be able to reach out more frequently and have the ability to reach out more frequently to folks who have the expertise like we were able to do as we reached out to Dr. Gilbert and he reached out to us. We can move quickly in doing that without the bureaucracy. I think that the agency would benefit from the ability to do that and particularly in this rapidly moving technological environment today.

Mr. RUSH. Do you have any additional comments along those lines?

Mr. GILBERT. I don't believe so.

Mr. RUSH. Thank you, Mr. Chairman. I yield back the balance of my time.

Mr. BRALEY. Thank you.

The Chair now recognizes the gentleman from Oklahoma, Mr. Sullivan, for 5 minutes.

Mr. SULLIVAN. Thank you, Mr. Chairman.

In Mr. Kane's statement, he states—this is to you, Mr. Gilbert—he states that you were commissioned to test Toyota's electronic throttle control system. What direction or parameters were you given and what was the purpose of this study?

Mr. GILBERT. The purpose of the study was to—and that's what I outlined in the report. The purpose of the study was to basically contribute to a better understanding of electronic engine controls and the system malfunctions. That was the purpose of that, OK? Because of what I had discovered with the anomalies, if you will, within the fail-safe capabilities of this, this electronic throttle control system, that's where I focused my preliminary report; and so that's what I looked at, was how can a fault occur or how could a fault occur within this system, this particular system that could possibly not be detected by the vehicle's onboard computer and lead to some sort of an unsafe condition?

Mr. SULLIVAN. And what directions were you given?

Mr. GILBERT. Pretty much freedom to do whatever I needed to do.

Mr. SULLIVAN. And when did you start your work?

Mr. GILBERT. Good question.

Mr. KANE. I think—if I could jump in here for a moment, I think Dr. Gilbert and I, we had some communications between him and my engineer in my office over a period of time and he reported his findings. My inclination at that point was immediately that he was on to something interesting; and we said, great, what will it take to get to you investigate this further? And Dr. Gilbert indicated that he needed some additional tools and he needed a little bit of time because he had some vehicles, and we authorized him to do whatever he needed to do to document this as quickly as possible.

He and I were both very concerned about the public safety aspect of this, which is, frankly, why we have very little parameters. We simply were all putting together a Herculean effort to get some testing done and to document what we could. Because, clearly, there is a diagnostic strategy within Toyota there is appearing to be an outlier.

Now, again, I want to emphasize, do we know that this is the cause of unintended acceleration? The answer is no. We have a bookend here with Dr. Gilbert's work. We have a bookend on this end with consumer complaints, and the interesting part is that this matches up against what Dr. Gilbert is telling us.

Are there other possibilities? Absolutely. We have always—from the very beginning, we have maintained that this problem is multi-faceted and multi-root cause. There is no one singular problem here. But what Dr. Gilbert is pointing out to us is informing us to look at the next steps.

Mr. GILBERT. If I could expand on that a little bit. You know, my curiosity was first piqued by watching the news media and the—you know the publicity that was going on about that. I first called Mr. Kane—and I believe it was November something. It was just a casual conversation, some questions about it. And, you know, it kind of piqued my interest; and that's why I went ahead and

looked into it on my own. There was no agreement between us to do anything. I just simply investigated.

When I found what I did initially, the first thing I did was I drafted a letter to NHTSA. I contacted Toyota, and then I also contacted Mr. Kane to tell him of what I had found. Literally within seconds I had an e-mail response back from Mr. Kane, and that's where it proceeded from then. And he was willing to give us whatever we needed equipment-wise and that sort of thing to jump ahead, if you will, into investigating that. So that's what I did. With approval of the university, we proceeded into our research.

Mr. SULLIVAN. Well, Mr. Gilbert, were you told when you began your work that this may be used in preparation for litigation?

Mr. GILBERT. You know, I assumed that that was where it could go, OK? My main search was for the truth. If you would have said that I would be sitting here today, I would have been really floored. But, you know, my main purpose was to get to the bottom of this, and that's where I would like to be. I would like to take this research a little farther.

Mr. SULLIVAN. How many vehicles or how many brands or manufacturers did you do similar tests on?

Mr. GILBERT. Have we done? Currently, today, within this research—and, of course, it's not included in this report—but we've simply—you know, we've looked into a Buick Lucerne that we have. We've looked into a Ford F–150. We also have a Chrysler product that we had planned on using. We just simply ran out of time to be able to do the time for the exhaustive testing that we need to be able to.

Because other systems are different, we have to approach their strategies from a different direction. None were quite as easy as the Toyota to crack. And as a matter of fact, the Buick Lucerne, we've not been able to do it, anything close to what we've done with this.

Mr. SULLIVAN. Mr. Gilbert, how does Toyota fix the problem you demonstrated in your study?

Mr. GILBERT. How would they fix it? My first recommendation would be the brake pedal fail-safe, where if the accelerator input was high along with the brake pedal application that the vehicle would go back to the fail-safe mode, set an DTC, and reduce power. That's the first thing that needs to be done. They need to be reprogrammed. Currently, it's my understanding that some vehicles have that; some do not. Some are scheduled to be reprogrammed; some are not.

The next thing that needs to happen is they need to re-evaluate their fault detection strategy in this area. They either need to tighten their parameters, change the strategy altogether, or do something to ensure that the type of problem that I have been able to introduce into the system is detectable. By detection, that means that then the fail-safe reduced engine power and that sort of thing is now in play.

Mr. STUPAK. [presiding.] The gentleman's time has expired.

Ms. DeGette for questions, please.

Ms. DEGETTE. Thank you, Mr. Chairman.

Mr. and Mrs. Smith, I really want to thank you for coming today. I think the thing that has got to be the most frustrating is that this horrible thing happened to you and then nobody believed you.

We had the same situation in Colorado around the same time where we had a family—a mother of young children. She was driving a Prius, and this happened to her on the highway in the mountains and went—and she finally she did what you did, Mrs. Smith. She went off the highway and drove into some trees so that she wouldn't hurt anybody else. Luckily, she lived.

But the same thing happened. The Toyota lawyer sent them letters saying, obviously, it was some problem with your maintaining the car, because there was nothing wrong.

So thank you for—it's hard for you to sit here and say this and for people to deny your credibility. So I just want to say that.

I have a couple of questions for you, Mr. Gilbert. You heard the Smiths talk today about what happened, and I'm sure you have read their testimony as well. Is what Mrs. Smith accounts as happening with her car consistent with a floor mat failure in your experience?

Mr. GILBERT. I think we need to be perfectly clear in that floor pedal or accelerator pedal entrapment with a floor mat is considerably different than what I've——

Ms. DEGETTE. So your answer would be no?

Mr. GILBERT. Restate the question, please.

Ms. DEGETTE. Is what she testified happen to her car consistent with a floor mat problem?

Mr. GILBERT. It's more consistent——

Ms. DEGETTE. Is it consistent with a floor mat problem? Yes or no, if you can.

Mr. GILBERT. I would say no.

Ms. DEGETTE. Would her problem be consistent with an accelerator sticking?

Mr. GILBERT. Sticking? It doesn't sound like that to me.

Ms. DEGETTE. OK. Would it be a problem with the brake, some kind of a worn brakes or something like that?

Mr. GILBERT. I might address the brake statement a little bit further.

Ms. DEGETTE. Sir, I apologize. If you can make it short, because I only have 5 minutes. Thanks.

Mr. GILBERT. If the brakes are applied while the vehicle is going down the highway and the throttle suddenly snaps to wide open throttle, you have two things to overcome. Not only do you have the kinetic energy of the vehicle moving forward that you have to got to bring to a halt, but you also have the full power output of the engine. At that point, the brakes are going to get very hot very quick, and they're going to start to fade fast.

Ms. DEGETTE. But would the original problem be caused by a brake problem of the acceleration that Mrs. Smith experienced?

Mr. GILBERT. No. Brakes don't have anything to do with the acceleration.

Ms. DEGETTE. Right. OK.

Now here is something you might not know. Just today, Toyota's lawyers told the committee staff that Toyota was able to duplicate your tests. The Toyota lawyers also said that they had the same

outcome that you had in your test but with no error codes. But they also said, the conditions that you imposed on your testing were "sabotaged" because you manipulated the electronics to make that happen. And they claimed that this could happen if you "sabotage" any car. Can you talk very quickly——

No, let me ask you this. Could what you did to those Toyotas get that outcome happen to Toyotas in real-world conditions?

Mr. GILBERT. In my opinion, yes.

Ms. DEGETTE. OK. And now certainly most of us aren't engineers. I never even got a C in any kind of engineering class, because I never took one. Can you explain the types of conditions that might cause these results in the real world?

Mr. GILBERT. It could be an anomaly in the accelerator pedal sensor itself. It could be a problem within the wiring harness. It could be a problem within the vehicle's onboard controller as well. The important question to ask here is, if I am able to interconnect these two signals, it is possible that accelerator pedal position sensors could have been mismanufactured from the very day that they were built. The fail-safe detection capabilities of the onboard computer are going to accept that as valid. So it's possible that mismanufacturing of some component along the line has somehow compromised the safety. I don't know exactly.

Ms. DEGETTE. So it could happen in the real world?

Mr. GILBERT. Absolutely.

Ms. DEGETTE. And is it significant to you that Toyota's independent consultant confirmed your tests? Does that make a difference to you?

Mr. GILBERT. They said that they were able to duplicate my conditions without setting a DTC.

Ms. DEGETTE. Yep.

Mr. GILBERT. I think that's significant. They should look at that and say, why didn't it?

Ms. DEGETTE. One last question, why do you think Toyota wasn't able to figure this out previously?

Mr. GILBERT. Maybe they didn't ask the right questions.

Ms. DEGETTE. Thank you.

Mr. STUPAK. Mr. Doyle for questions.

Mr. DOYLE. Yes. Mr. Chairman, I will be brief.

To the Smiths, thank you so much for your testimony today. We appreciate you being here.

Mr. Gilbert and Mr. Kane, you said Toyota will be introducing a software fix or some sort of patch to institute a fail-safe where, if the accelerator and brakes are both on, the brakes win. But you also said that not all cars could be updated with this patch. What do you think Toyota should do for the cars that are on the road that can't be easily updated? I mean, is this something where NHTSA should be called for some sort of a hardware fix or to swap the CPU? How do we deal with the cars that aren't easily addressed with this software patch?

Mr. KANE. I think that that raises the question from the very get-go, what are the technological problems that give rise to that? I mean, frankly, these vehicles have substantially similar electronic throttle control systems going back as far as 2002, and I have not heard that there is a technological obstacle to installing a brake to

override. It is something we have advocated independently of Dr. Gilbert in his work. We believe that it is a critical safety omission on behalf of Toyota that has led us in part to where we are today simply because there is no driver control in the event of a runaway engine. Dr. Gilbert and I have talked about this subsequently, and it's something that has to happen. The technological obstacles need to be looked at closely to see if they're legitimate.

Mr. DOYLE. Do you have anything to add to that, Dr. Gilbert?

Mr. GILBERT. I think it's important to note that the very initial problem needs to also be addressed in that the fail-safe detection capabilities of this electronic throttle control system apparently fall short of where they need to be. The fail-safe or the brake pedal override, if you will, is just an added measure of safety in the event that if for some reason this circuit was not detected as being defective then at least the driver has some second course of action that should force it into a fail-safe mode. That's exactly what it would want. It may be possible that other vehicle manufacturers may want to address this same situation as well, and I'm told that there is a number of them that do.

Mr. DOYLE. Thank you.

Mr. Chairman, I will yield back.

Mr. STUPAK. Thank you, Mr. Doyle.

Mrs. Christensen for questions, please.

Mrs. CHRISTENSEN. Thank you, Mr. Chairman; and, again, I thank all of you for being here, particularly the Smiths.

Mr. and Mrs. Smith, I am not clear. In light of the recalls that have happened now, have you been contacted by your dealer, the district field technician, NHTSA, or anyone to rectify the problems that you have gone through over the last couple of years?

Mrs. RHONDA SMITH. Have I been contacted by anyone?

Mrs. CHRISTENSEN. Yes. You got no response from your dealer, from the technician, and from NHTSA over the last few years, is that correct?

Mrs. RHONDA SMITH. That's correct, yes.

Mrs. CHRISTENSEN. In light of the recalls, has anyone come back and contacted you?

Mrs. RHONDA SMITH. No, ma'am.

Mrs. CHRISTENSEN. And we've been told I think that in case of unintended acceleration, what should happen is to apply the brake, put the car in neutral, and bring it to a safe stop. Isn't that what you did? Would that be——

Mrs. RHONDA SMITH. I tried.

Mrs. CHRISTENSEN. And it did not stop the car?

Mrs. RHONDA SMITH. It did not. But also I think there is something I didn't mention. Of course, you all on the panel know about my letter. But this car also, something electronic, it was doing the revving up and down, also, and I think other people in this room did not know that. But my car, even when it was parked on the side of the road and I was trying to push that button to stop it, it was still revving up and down. So that was another little extra nice thing there about the electronics.

Mrs. CHRISTENSEN. I did read that in your testimony.

I had a question about the break override, but I think that that was answered.

Mr. Kane, you are laying most of the blame on Toyota; and I would like to know, in your experience, judging—looking at your experience with Toyota and their response or their lack of response, what is it that you have generally seen in your work with other manufacturers? Is this the usual response, the way that it——

Mr. KANE. That's a good question. Certainly—we've certainly seen other manufacturers try and push these safety measures down.

I think what's particularly troubling is that Toyota holds a special place here in the United States amongst owners. As you know, we've heard from many of the members here that Toyota is a lauded brand. People look at Toyota as being the most reliable, as a company that we can all stand behind and that we know that their products are reliable.

I think what is the crisis that we're in today is in part because that vaunted image that they've created is not meshing with their response and certainly not the response that they've given to consumers. And that's particularly troubling, and I think that's why we've seen them fall so hard and so fast.

Mrs. CHRISTENSEN. But the answer to your question, though, I think is—because while Toyota's on the spot today, your response from other manufacturers has been similar?

Mr. KANE. Unfortunately, in crises, we see manufacturers act in ways that often ignore some of the public safety issues that need to be up front. That's been my experience.

Mrs. CHRISTENSEN. OK. Unless Dr. Gilbert has anything to comment on that question, I have no further——

Mr. GILBERT. I would like to comment on a statement that Mrs. Smith has made. She mentions the fact of the engine revving, oK. One of the things that the onboard computer will do is, if the RPMs of an engine get to a certain limit, in order to keep from destroying the engine the rev limiter will kick in. And what that will do is it will give a very pronounced audible revving of the engine. This is consistent with a situation where wide-open throttle exists.

Mrs. CHRISTENSEN. Thank you for that clarification.

Mr. Chairman, I yield back.

Mr. STUPAK. Thank you.

Mr. Braley for questions, please.

Mr. BRALEY. Thank you, Mr. Chairman.

Mr. and Mrs. Smith, you graciously accepted the responsibility earlier in your testimony of speaking on behalf of the people who aren't alive to tell their stories of what happened with the sudden acceleration that they did not anticipate, and I want to thank you on behalf of all those people for having the courage to come tell your story.

But as you have sat here throughout this hearing, I am struck by the fact that you both seem like reasonable, intelligent, articulate, sophisticated people, and yet every time you have raised a concern about this problem, people treated you like you were crazy. So speaking for all those consumers who have gone through similar frustrations, I want you to tell this committee what it's like to know that you're not crazy, that you know what happened and have nobody in a position of authority who is willing to do something about it.

Mrs. RHONDA SMITH. Well, it made us very, very angry. I tried and my husband tried so hard to send it out to the media, and I knew no one would listen to me as a little person or to my husband. So I knew from the very first. And so I even—you don't know some of the movie stars and Oprah and all those big people. I thought if I can just get them—if I can just get them to get on to this, because I knew I couldn't fight, we could not fight the a big company like that. But we got no response from that.

But to be treated like we were, there are no words to express the anger that was there. I mean, to even get slapped in the face time after time and to literally—and to be literally be called liars, which we are not. But what are you going to do? We did all we could do.

Mr. BRALEY. And I congratulate you for that. I think you should have called Joe Pesci and Marisa Tomei.

I want to talk about My Cousin Vinny with Mr. Kane and Mr. Gilbert. It is probably one of the best movies on trial advocacy and engineering I have ever seen. And one of the scenes, a classic scene in that movie is when they are sitting in this rundown hotel room arguing over who is responsible for a leaking faucet. And Marisa Tomei, Mona Lisa Vito, the character in that movie, said to Joe Pesci that she turned off the faucet. He said, are you sure? She said, I am sure. And he said, are you sure you are sure? And she said, I am.

One of the reasons that scene is so important is because I have right here the reference manual on scientific evidence that is used in Federal courtrooms all over the country to deal with scientific evidence and engineering, and there is a specific chapter in here called Success and Failure in Engineering that gets right to the heart of that faucet scene. It talks about the role of failure in engineering design.

Failure is a central idea in engineering. In fact, one definition of engineering might be that it is the avoidance of failure. When a device, machine, or structure is designed by an engineer, every way in which it might credibly fail must be anticipated to ensure that it is designed to function properly. But, gentlemen, if you completely exclude from your analysis one potential problem that might be contributing to sudden unanticipated acceleration, you're not doing your job as an engineer, are you?

Mr. GILBERT. Absolutely.

Mr. BRALEY. And one of the things that we know is that—and this is something that is true in a lot of disciplines, not just engineering. But another part of this manual says, one of the apparent paradoxes of science and engineering is that more is learned from failures than from successes. Isn't that true in the fields that both of you work in, that it's the rigor of a discipline of repeated testing and ruling out of potential causes that leads you to the ultimate truth of what's causing a problem?

Mr. GILBERT. Yes, sir.

Mr. BRALEY. And this same manual goes on and talks about how successful designs can lead to failure. And we've seen that, where a product which is used on multiple applications, hundreds and thousands, maybe millions of times does not encounter an outside event like the ones you've been talking about that will trigger a catastrophic incident that can lead to the sudden death of people

like we've heard about at this hearing. And it's not that these companies are bad or are intending to build defects into the product. It's just sometimes the rigorous application of design analysis and failure analysis has not been applied to correct a problem. Do you agree with that?

Mr. KANE. I do.

Mr. GILBERT. Yes.

Mr. BRALEY. Mr. Chairman, I think that's been one of the problems of getting to the core of this problem all along is that we've been looking for mechanical failures that are a cheap, easy fix and haven't done the type of rigorous failure analysis to get to the heart of the problem.

And I will yield back.

Mr. STUPAK. Thank you, Mr. Braley.

That concludes questions by all members of the subcommittee. Oh, Ms. Schakowsky. Sorry. I didn't see you there, Jan. You are recognized for 5 minutes.

Ms. SCHAKOWSKY. Thank you.

Mr. Gilbert and Mr. Kane, you have both done extensive research on the electronic throttle systems of Toyota. Have you done any similar research on other brands? Do you intend to do so? Do you think that the problem that you found in Toyota might be common to other vehicles or present in other vehicles?

Mr. GILBERT. It is possible that there may be other vehicles that may use a strategy that's not ironclad as well. You know, that requires a much more in-depth investigation of those systems as well. You've got to remember that in order for you to be able to look into what it takes to set a diagnostic trouble code or a fault in this system you first have to identify what the parameters are for the vehicle's manufacturers to allow such a thing to occur. Most of them are very, very tight.

When I first started into this, I had a preconceived notion that it was probably going to be an impossible task. So you can imagine my surprise when I found that it was as straightforward as it was to be able to introduce a fault.

Ms. SCHAKOWSKY. Mr. Kane?

Mr. KANE. Yes. I think generally looking at—as someone who does defect detection work and surveillance on problems in the field and using the various data sets, there clearly could be problems with other manufacturers. But what's interesting in looking at these problems is that we're now at a place where our regulations are still very behind in the technology. The technology that's in these cars and controls these cars—I mean, the fact that we don't have requirements, for example, for a brake to idle override on electronics despite the recognition of the problems that can occur may be some shortcomings that could address that on a more broad basis.

Ms. SCHAKOWSKY. Thank you.

I wanted to ask the Smiths a question and add my thanks to both of you for being here. You absolutely did the right thing, and you went to Toyota, and you went to NHTSA. It sounds like you went to Oprah. But you stated that prior to inspecting your vehicle, NHTSA seemed to have already decided that the event you experienced was caused by a floor mat trapping of your accelerator pedal.

And you must have been surprised. You must not have been surprised when NHTSA's incident report blamed the floor mats for your harrowing experience. Do you think that it was the floor mat that caused the unintended acceleration?

Mrs. RHONDA SMITH. No.

Ms. SCHAKOWSKY. And the committee received a copy of a vehicle and incident site inspection memorandum for your vehicle drafted by Scott Yon, an investigator with NHTSA on May 2nd, 2007. And Mr. Smith, halfway through the first paragraph, states—NHTSA states, "No electronic interrogation of any vehicle system was performed." That means that NHTSA decided that it did not need to investigate whether electronics played a role in your wife's experience. How do you feel about NHTSA's decision not to even inspect your car's electronic system?

Mrs. RHONDA SMITH. Well, it was when I received that in the mail, I called Mr. Yon and questioned him about that. Because I told him all along, even when he came down, I said it was not my floor mats. My floor mats did not make all those other things happen to my car. They couldn't have. And I told him that something else needed to be checked out. The electronics needed to be checked out on that car.

And I have a note—I don't know if it's on that original one there—but I have a note at the top that he told me that further investigation was going to be done on that type of vehicle, that it was an ongoing investigation.

Ms. SCHAKOWSKY. And did you receive any further notification about what happened? Or did you inquire about——

Mrs. RHONDA SMITH. I received nothing else. And also at that point he said that he was being taken off of the investigation, and I thought that was rather strange.

Ms. SCHAKOWSKY. Thank you.

Mrs. RHONDA SMITH. So I never—no, I just gave up on it then.

Ms. SCHAKOWSKY. Thank you, all of you.

I yield back, Mr. Chairman.

Mr. STUPAK. That now concludes questions from members of the subcommittee. There are a number of members here from the full committee, as I recognized earlier. They will be allowed to ask questions.

Mr. Buyer, questions, please, 5 minutes.

Mr. BUYER. Thank you very much.

For the purpose of open disclosure, just down the road from where I live is Lafayette, Indiana. Subaru makes the Toyota Camry there in Lafayette.

I also personally know a lot of people who work on the line, and they are very sharp. They take a lot of pride in what they do.

And I would also recognize—I don't care whether it's Toyota or any other company out there—if, in fact, they've done things to cover up an error, I assure you that their brand is blemished, and it requires good-faith commitments on their part to then restore trust and confidence in people to buy that product. So I can recognize that Toyota has to get off their heels and on their toes to do this.

At the same time, with regard to open disclosure, I am uncomfortable here today, Mr. Chairman, with regard to some of the tes-

timony. The testimony—the reason I say that is that one of the nice things about our advocacy system in America is that the truth will always come out someway, somehow and that we also have to make sure that the advocacy is pure.

So, Mr. Kane, I am uncomfortable with regard to your advocacy here today. I just want you to know that. And also that of Mr. Gilbert.

Mr. Kane, your firm, Safety Research & Strategies, has released a report on February 5 detailing a number of allegations against Toyota related to sudden unintended acceleration. You noted in your report that it was not funded by attorneys, consumers, advocacy groups, or experts interested in the subject matter. It was not produced for litigation against Toyota Motor Company. You would nonetheless like to acknowledge five attorneys who sponsored some of your research into sudden unintended acceleration in Toyota vehicles. You then go on to list the five firms.

What does the word "sponsored" mean?

Mr. KANE. Let me tell you that——

Mr. BUYER. No, what does the word "sponsored" mean?

Mr. KANE. The word "sponsor" means we have done work for these folks to represent the victims——

Mr. BUYER. How much have you been paid by these firms?

Mr. KANE. Frankly, I have not a lot of calculation on that, but what I can tell you is——

Mr. BUYER. Is it $1 million?

Mr. KANE. No, sir.

Mr. BUYER. Is it $500,000?

Mr. KANE. It is far less than it cost me to be here today.

Mr. BUYER. Is it $100,000?

Mr. KANE. No, sir.

Mr. BUYER. Then what is it?

Mr. KANE. I don't know the answer.

Mr. BUYER. You don't know how much lawyers are paying you with regard to your report? Of these five attorneys who have sponsored your research, how many of these law firms right now are suing Toyota?

Mr. KANE. I believe every one of them. They represent the voice of a victim in the problem that we are dealing with today. We are informed by those victims.

Mr. BUYER. So you are acknowledging that you are being sponsored by five litigation trial lawyer firms of whom are suing Toyota, is that correct?

Mr. KANE. If your intimation is——

Mr. BUYER. No, that is not my intimation. Is that correct?

Mr. KANE. It is correct that we have worked for those——

Mr. BUYER. Is it correct?

Mr. KANE. If your intimation is that our advocacy is somehow informed by——

Mr. STUPAK. OK. OK. Hold on here. Hold on. Buyer, hold on. You can't be talking over each other.

Mr. BUYER. I directed him to answer a simple question, Mr. Chairman.

Mr. STUPAK. Then tell him he is not responsive.

Mr. BUYER. You are nonresponsive.

Mr. KANE. I am responsive to your question, Congressman. I have answered your question.

Mr. BUYER. Do you acknowledge——

Mr. STUPAK. Mr. Kane.

Mr. BUYER. Do you acknowledge that the five law firms that have sponsored you are involved in litigation against Toyota?

Mr. KANE. That is accurate.

Mr. BUYER. Thank you. Thank you.

Now with regard to Mr. Gilbert, I don't understand what the word—now we've kind of dissected what the word "sponsored" means. Sponsored means being paid. What does the word "commissioned" mean? Are you being—when Mr. Kane commissions to you do a report, are you doing it for free? Or are you being paid?

Mr. GILBERT. I am being paid.

Mr. BUYER. All right. How much money are you being paid for this report by Mr. Kane? Is it more than $100,000?

Mr. GILBERT. No.

Mr. BUYER. How much money are you being paid by Mr. Kane?

Mr. GILBERT. Whatever he is paying me, it's not enough, trust me.

Mr. BUYER. Mr. Kane, how much have you paid?

Mr. KANE. I can answer that question if you would like.

Mr. BUYER. Mr. Kane, how much have you paid?

Mr. KANE. I have paid Dr. Gilbert $1,800, and I have sent him some technical equipment that cost me approximately $4,000, sir.

Mr. BUYER. How much more money is to be paid?

Mr. KANE. We have entered an agreement where as his time he will be paid $150 per hour for his service moving forward.

Mr. BUYER. Moving forward. So what we have here is you are being sponsored by five law firms of whom are suing Toyota and you have now hired someone to prepare a report that could also be used in litigation later on. Now I am getting a better picture.

Now with regard to this question about manipulation, Mr. Gilbert, in order for you—I don't understand what the word "manipulation" means. In order for you to—the vehicles that you use, are these vehicles that had an acceleration problem or they did not?

Mr. GILBERT. No, sir. They did not. These were normally——

Mr. BUYER. Did you cut three wires in order to manipulate this?

Mr. GILBERT. No, sir. The circuit remained intact from the accelerator pedal to the ACM. The only thing that I did—because of safety purposes—is I tapped into those circuits so I could watch them with an oscilloscope and understand what was going on.

I might back up and say that I had the decision on whether to push the send button to NHTSA. I had the decision on my own to contact Toyota. I had the decision on my own to contact Mr. Kane. To be quite honest, at the moment that I discovered this, I was sick at my stomach.

Mr. BUYER. Mr. Chairman, I think what you're doing here is the right thing. We will find the problem. There will be a lot of research done out here. I don't think this is the—this is just the starting point to find the problem. And I think America, Mr. Chairman, has learned that whenever—you know, from the Dateline incident whereby they re-created the staged crash for the fuel tank, that when you manipulate to exaggerate and show there is a prob-

lem, that doesn't work very well. But I believe that smart minds are actually going to resolve this problem, Mr. Chairman. I appreciate you holding this hearing.

Mr. STUPAK. As the ranking member said, we've looked at over 100,000 pages of documents. We will continue to have further hearings in this area. This is probably the first of a number of hearings we will have.

Next, Mr. Gonzalez is a member of the committee. Your turn for questions, please.

Mr. GONZALEZ. Mr. Chairman, thank you very for this opportunity.

I guess I need to start off by just making an observation that I think you can be a Member of Congress, you can be a plaintiff's lawyer and you can be a manufacturer, and we would all still have safety first. So I will ask Mr. Kane and Mr. Gilbert, the fact that you have these relationships as has been explained, has that altered or modified any of your testimony here today?

Mr. Kane?

Mr. KANE. No, it has not. We prepared our report at our own——

Mr. GONZALEZ. Yes or no would be fine. Mr. Gilbert?

Mr. GILBERT. No, it has not.

Mr. GONZALEZ. The Toyota Tundra plant located in San Antonio, Texas, is not in my district. I represent half the city. But I would have been really proud to have had that particular enterprise in my district because of the type of corporate citizen that Toyota has been in our area, the opportunities that it has presented. But that doesn't mean that any individual or corporation is not going to be held to the same standard, whether they are in your district or not.

Now, I do have a question. Mr. Kane, you would attribute sudden unintended acceleration to floor mats in certain instances, would you not?

Mr. KANE. Absolutely. As we have said in our report, we agree that that can happen.

Mr. GONZALEZ. And Toyota has addressed that?

Mr. KANE. Very late. Yes, they have lately.

Mr. GONZALEZ. They have addressed it. It is not an existing condition that you should be concerned about.

Mr. KANE. It is a problem they have experienced for years and they have not addressed it in all models.

Mr. GONZALEZ. I do wish we were in a courtroom, because I would have the help of a judge that you would answer the questions succinctly without any editorializing. Unintended acceleration could also be caused by a sticky accelerator. You don't dispute that, do you?

Mr. KANE. Yes, I do.

Mr. GONZALEZ. You do dispute that the present corrective action being taken by Toyota on the sticky acceleration pedal is not——

Mr. KANE. It does not result in unintended acceleration as we have looked at unintended acceleration.

Mr. GONZALEZ. Well, it is going to be how you are going to define it, if it is going to be sudden, if it is going to be constant and so on. But you are saying it has nothing to do—you are on the record today saying that a sticky pedal has nothing to do with unintended acceleration or maintaining acceleration at a certain point?

Mr. KANE. Maintaining at one point is different. It is not sudden unintended acceleration, sir.

Mr. GONZALEZ. And we can get into that debate. But we have confused all of that, if you haven't noticed, but no one, and I am hoping maybe other panels and other committees will go into the different distinctions of when you have hit the accelerator and it gets stuck as opposed to when you don't even touch it and the car goes out of control. These are huge differences which we are not even touching on, is my understanding.

So I gather what you are saying is what hasn't been tested might be a third culprit, and that is going to be the electronic system. Is that what you are saying?

Mr. KANE. Yes, sir.

Mr. GONZALEZ. But at this point you would not go on record and say that would be the only cause?

Mr. KANE. No, sir.

Mr. GONZALEZ. Mr. Gilbert, have you ever heard of Leonard Evans?

Mr. GILBERT. No, sir.

Mr. GONZALEZ. I hadn't either, to be honest with you. But he was on Linda Wertheimer's recent NPR program, and this is what he said. And I always believed this, and I think Click and Clack agree, the weakest brakes are stronger than the strongest engine. All right?

So what happened to the Smiths, which wasn't their fault and totally out of control, it shouldn't happen to anyone. But if you applied the brakes with all the humanly possible pressure that you have, should it have stopped the car? Should it have brought the car to slowing it down or stopping it? And, if not, why? What would cause someone to be able to put that much pressure on that pedal and not have any result what ever?

Mr. GILBERT. First off, let's ask the question, let's say that the vehicle was at speed, 60 miles per hour. It took a certain amount of horsepower to get there, would you agree?

Mr. GONZALEZ. Sure.

Mr. GILBERT. Most of us don't drive our car at wide open throttle. Most of the time when you are driving down the interstate you are looking at a partial throttle opening at best. If you were at speed and the throttle snapped full open, you have two things to overcome: You have the kinetic energy that was built up in that vehicle to get there, which took a lot of power. You also have now the full amount of the engine to try to overcome.

So, at that point, and I believe that there has been some studies done about braking distances, even if your brakes were sufficient to bring that car under control, it is going to extend the stopping distance considerably. And when you do that, the brakes start to overheat. The hotter they get, the less effective they become. Essentially that is all a brake system does. It takes that energy that you stored in that car and it changes it into heat as you apply the brakes.

Mr. GONZALEZ. So that may explain what happened, but not necessarily that the brake computer malfunctioned at the same time that your accelerator computer. Because you have two different computers in that model, don't you?

Mr. GILBERT. Would you explain that, please?

Mr. GONZALEZ. My understanding is that you have two separate computers in that model car. Now, I may be wrong, and I don't know that they had brake override or whatever.

Mr. GILBERT. Your brake system is still hydraulic. Excuse me. Your brake system is still hydraulic. Your brake system is still hydraulic. The electronics that we put in place on the brake systems are there primarily for analog brake purposes. They are for safety, so that you can steer without losing control of the vehicle. So it is possible that you could lose your anti-brake capability, but still have full brake application because of the simple hydraulics of the system. That is the way it works.

Mr. GONZALEZ. The brakes should work. I am over my time, Mr. Chairman. Thank you for being so generous.

Mr. STUPAK. Mr. Terry for questions, please.

Mr. TERRY. No questions.

Mr. STUPAK. No questions for Mr. Terry.

Mr. Ross, is he still here or did he leave?

Well, that concludes then all of the questions of everybody on this panel. I want to thank the witnesses, the Smiths, Mr. Kane, Dr. Gilbert. You are welcome to stay for the rest of the hearing if you would like.

Mr. Burgess wants to ask one more question. I know better, because Mr. Burgess never asks one question. We will try it, Mike.

Mr. BURGESS. Mr. Gilbert, if I could just ask you to address this, what happened when that car was put into reverse? Why did that not seize up the transmission and drop it on the road?

Mr. GILBERT. Some transmissions are designed—and, you know, you are asking me to speculate here a little bit, because——

Mr. BURGESS. Well, let me ask you this. Is there anything that you have found that would have prevented the vehicle from engaging the reverse gear? Does it have something that stops it from going into reverse?

Mr. GILBERT. Hydraulically speaking, and you need to speak to someone who works more on transmissions, I have not been into transmissions for quite some time, there are a number of conditions where you don't want to go into reverse. So it is possible that hydraulically or electronically it was not capable of going into reverse at speed like that.

Mr. BURGESS. Then what about the on-off switch, the button in that car?

Mr. GILBERT. I can't address that.

Mr. BURGESS. Thank you.

Mr. STUPAK. That now will conclude the questions for this panel. Thank you again for being here.

It has been a long hearing so far. We have two more panels. Let's go in recess until 2:15. We will be back here in 7 minutes. Let's give everyone a chance to stretch their legs. We are in recess.

[Recess.]

Mr. STUPAK. The committee will now come back to order. We will resume. I ask members and members of the media to take their position, please, so we can continue.

On our second panel we have Mr. James E. Lentz, President and Chief Operating Officer of Toyota Motor Sales, USA, Incorporated.

Mr. Lentz, it is the policy of this subcommittee to take all testimony under oath. Please be advised that you have the right under the rules of the House to be advised by counsel during your testimony. Do you wish to be represented by counsel?

Mr. LENTZ. Yes, I do.

Mr. STUPAK. Would you please identify him?

Mr. LENTZ. Ken Hester from King and Spaulding. As well, Mr. Chairman, if you would like to hear from an expert that has done testing on Dr. Gilbert's as well as Exponent, there was another attorney present today, Vince Galvin of Bowman and Brooke. He is here with me as well.

Mr. STUPAK. Any time during questions or testimony if you want to consult with them, you can, but we would look to you for the answers to the questions.

Mr. LENTZ. Yes, sir.

Mr. STUPAK. As I said, it is our policy to take our testimony under oath. I would ask you to please rise and raise your right hand and take the oath.

[Witness sworn.]

Mr. STUPAK. Let the record reflect that the witness has replied in at firm. He is now under oath.

Mr. Lentz, I would ask for an opening statement. You may begin, please.

STATEMENT OF JAMES E. LENTZ, PRESIDENT AND CHIEF OPERATING OFFICER, TOYOTA MOTOR SALES, USA, INC.

Mr. LENTZ. First I am here with my tour de famille. Dealers are here, associates are here, as well as the plant associates, and I thank them for coming.

Chairman Waxman, Subcommittee Chairman Stupak, Ranking Member Barton and members of the committee, thank you for inviting me here today. My name is Jim Lentz. I am the President and Chief Operating Officer of Toyota Motor Sales, USA. In my testimony, I will address Toyota's recent recalls and the decisive actions that we are taking to restore trust in the tens of millions of Americans who purchase and drive our vehicles.

For two generations, we have provided Americans with cars and trucks that are safe and reliable and we fully intend to produce even safer and higher quality vehicles into the future even as we pave the way for the next generation of electric vehicles and hybrids that our society needs.

In recent months, we have not lived up to our high standards our customers and the public have come to expect from Toyota. Put simply, it has taken us too long to come to grips with a rare but serious set of safety issues, despite all of our good faith efforts. The problem has also been compounded by our poor communications within our company and with regulators and consumers.

While all auto companies have recalls and all major auto companies have experienced complaints about unintended acceleration, Toyota's recalls have caused concern among our customers. I would like to assure the committee and the American people that nothing is more important to Toyota than the safety and the reliability of the vehicles that our customers drive.

We are committed to not only fixing the vehicles on the road and ensuring that they are safe, but making all of our new vehicles better, even more reliable, through strict quality controls, enhanced communication, and redoubling our focus on putting the customer first.

Our 1,500 dealers are making tremendous efforts to complete our recalls as quickly and as conveniently as possible for our customers. Some dealers are staying open 24 hours a day, 7 days a week, and they are repairing vehicles at the rate of about 50,000 a day. Thus far, we have repaired nearly 800,000 vehicles. We have rigorously tested our solutions and we are confident that these repairs to Toyota vehicles will make them among the safest on the road today.

Our engineers have identified two specific mechanical causes of unintended acceleration covered by recalls and we currently address these through our open recalls. One involves floor mats, that when lose or improperly fitted can entrap the accelerator pedal. The other concern is accelerator pedals that over time can grow sticky with wear and humidity. The solutions that we have developed are both effective and durable.

We are confident that no problems exist in our electronic throttle systems in our vehicles. We have designed our electronic throttle system with multiple fail-safe mechanisms to shut off or reduce engine power in the event of a system failure. We have done extensive testing on this system, and we have never found a malfunction that has caused unintended acceleration.

Additionally, in December we asked Exponent, a world-class engineering and scientific consulting firm, to conduct a comprehensive independent analysis of our electronic throttle system with an unlimited budget. Their interim report confirms that it works as it is designed. Toyota will make the results of this comprehensive evaluation available to the public and the Congress as soon as it is completed.

So, why did it take so long to get this to this point? With respect to pedal entrapment, Toyota conducted investigations of consumer complaints which focused too narrowly on technical issues without taking full account on the way consumers used our vehicles.

In the case of sticking accelerator pedals, we failed to promptly analyze and respond to information emerging from Europe and the United States. We acknowledge these mistakes. We apologize for them. And we have learned from them. We now understand that we must think differently when investigating complaints and communicate faster, better and more effectively with our customers and with our regulators. Our recent voluntary recalls of certain 2010 Prius and Lexus hybrids and certain 2010 Tacoma trucks illustrate this approach.

We are also going further. Our President Akia Toyoda has announced a top-to-bottom review of our operations that he will personally lead with the support of a new chief quality officer from North America and our other principal regions. We will ask independent outside experts to evaluate the findings to make sure that we meet or exceed industry standards. We are expanding our network of technical offices in the U.S. so we can gather information faster and respond more aggressively to incident reports. And we

will install advanced brake override systems in all of our new models, making us one of the first full-line manufacturers to offer this customer confidence feature as standard equipment.

Additionally, we are announcing that we will install this system on an expanded range of vehicles, including Tacoma, Venza and Sequoia models, that are capable of accepting this new software. We have previously announced this system would be involved in Camry, Avalon, Lexus ES and IS models.

These actions underscore that Toyota is going above and beyond what is necessary in terms of vehicle modifications and repairs to ensure that our customers can be completely confident in the safety and reliability of their cars and trucks.

Chairman Waxman, Subcommittee Chairman Stupak, and ranking members, as well as members of the committee, these are only some of the steps that we are taking to earn back the confidence of Congress and the American people. Our 200,000 team members, dealership employees and suppliers in the U.S. are the backbone of that effort. I am confident that we will succeed in restoring customer trust in our quality, safety and reliability of our vehicles.

Thank you very much. I am ready for your questions.

[The prepared statement of Mr. Lentz follows:]

PREPARED TESTIMONY OF

JAMES LENTZ

PRESIDENT AND CHIEF OPERATING OFFICER

TOYOTA MOTOR SALES, U.S.A., INC.

COMMITTEE ON ENERGY AND COMMERCE

FEBRUARY 23, 2010

Chairman Waxman, Subcommittee Chairman Stupak, Ranking Members Barton and Walden, members of the Committee, thank you for inviting me here today. My name is Jim Lentz, and I am the President and Chief Operating Officer of Toyota Motor Sales, USA.

In my testimony, I will address Toyota's recent recalls and the decisive steps we are taking to restore the trust of the tens of millions of Americans who purchase and drive our vehicles. For two generations, we have provided Americans with cars and trucks that are safe and reliable. And we fully intend to produce even safer, high quality vehicles in the future, even as we pave the way with the next generation hybrid and electric vehicles that our society needs.

In recent months, we have not lived up to the high standards our customers and the public have come to expect from Toyota. Put simply, it has taken us too long to come to grips with a rare but serious set of safety issues, despite all of our good faith efforts. The problem has also been compounded by poor communications both within our company and with regulators and consumers. While all auto companies have recalls and all major auto companies have experienced complaints about unintended acceleration, Toyota's recalls have caused concerns among our customers.

I would like to assure the Committee, and the American people, that nothing matters more to Toyota than the safety and reliability of the vehicles our customers drive. We are committed not only to fixing vehicles on the road and ensuring they are safe, but to making our new vehicles better and even more reliable through strict quality control, enhanced communication and a redoubled focus on putting our customers first.

Our 1,500 dealers are making extraordinary efforts to complete our recalls as quickly and conveniently as possible. Some dealers are staying open 24/7 and they are repairing vehicles at a rate of about 50,000 a day. To date, we have repaired close to a million vehicles.

We have rigorously tested our solutions and are confident that with these repairs, Toyota vehicles will be among the safest on the road today. Our engineers have identified two specific, mechanical causes of unintended acceleration covered by the recalls and we are currently addressing these through the open recalls. One involves floor mats that when loose

or improperly fitted can entrap the accelerator pedal. The other concerns accelerator pedals that can, over time, grow "sticky" with wear. The solutions we have developed are both effective and durable.

We are confident that no problems exist with the electronic throttle control system in our vehicles. We have designed our electronic throttle control system with multiple fail-safe mechanisms to shut off or reduce engine power in the event of a system failure. We have done extensive testing of this system and have never found a malfunction that caused unintended acceleration.

Additionally, in December we asked Exponent, a world-class engineering and scientific consulting firm, to conduct a comprehensive, independent analysis of our electronic throttle control system with an unlimited budget. Their interim report confirms that it works as designed. Toyota will make the results of this comprehensive evaluation available to the public when it is completed.

Why did it take so long to get to this point? With respect to pedal entrapment, Toyota conducted investigations of customer complaints which focused too narrowly on technical issues without taking full account of the way customers used our vehicles. And in the case of sticking accelerator pedals, we failed to promptly analyze and respond to information emerging from Europe and in the United States.

We acknowledge these mistakes, we apologize for them and we have learned from them. We now understand that we must think differently when investigating complaints and communicate faster, better and more effectively with our customers and our regulators. Our recent voluntary recalls of certain 2010 Prius and Lexus hybrids and of certain 2010 Tacoma trucks illustrate this new approach.

We are also going further. Our President Akio Toyoda has announced a top-to-bottom review of our operations that he will lead personally, with the support of new Chief Quality Officers for North America and our other principal regions. We will ask independent, outside experts to evaluate the findings to make sure we meet or exceed industry standards.

We are expanding our network of technical offices in the U.S. so we can gather information faster and respond more aggressively to incident reports.

And, we will install advanced brake override systems in all our new models – making us one of the first full-line manufacturers to offer this customer confidence feature as standard equipment. Additionally, we are announcing that we will install this system on an expanded range of vehicles – including the Tacoma, Venza and Sequoia models – that are capable of accepting the new software. We had previously announced that the system would be installed onto the Camry, Avalon and Lexus ES 350, IS 350 and IS 250 models. These actions underscore that Toyota is going above and beyond making the necessary vehicle modifications and repairs

to ensure that our customers can be completely confident in the safety and reliability of the cars and trucks they drive.

Chairman Waxman, Subcommittee Chairman Stupak, Ranking Members Barton and Walden, members of the Committee, these are only some of the steps Toyota is taking to earn back the confidence of Congress and the American people. Our 200,000 team members, dealership employees and suppliers in the United States are the backbone of that effort – and I am confident we will succeed in restoring customer trust in the quality, safety and reliability of our vehicles.

Thank you. I look forward to your questions.

Mr. STUPAK. Thank you, Mr. Lentz.

Chairman Waxman for questions, please.

Mr. WAXMAN. Thank you, Mr. Chairman.

Mr. Lentz, thank you for your testimony, your cooperation with this committee's investigation. These past few months have not been a happy time for your company or for your customers. People have been very anxious about what appears to be a rare situation, but it is a very scary and possibly fatal situation if a car has a sudden acceleration and the car seems to be out of control.

For the future, you are suggesting that you are going to put in a system where the brake will override the gas pedal?

Mr. LENTZ. Yes. 2011 model year vehicles. So with the exception of maybe one vehicle by the end of this calendar year, most of the vehicles that come into the U.S. will have as standard equipment the brake override system.

Mr. WAXMAN. That will be helpful. But let me ask you about the cars that are already on the road. People have these vehicles. You are not planning to do any retrofit of the brake over the gas pedal in those cars, are you?

Mr. LENTZ. There are seven of those vehicles that are currently on the road that we are retrofitting. There are seven models. Camry, Avalon——

Mr. WAXMAN. You are going to retrofit all the vehicles?

Mr. LENTZ. Those that are technically possible we are retrofitting

Mr. STUPAK. Is your microphone still working, Mr. Lentz?

Mr. LENTZ. The green light is on.

Mr. STUPAK. Just get a little closer, if you can.

Mr. WAXMAN. How many vehicles will then be on the road with the possible problem if the problem is due to something other than the mats or the sticky pedal?

Mr. LENTZ. I don't know the exact number of vehicles on the road that will have the BOS system. It is the majority, but I can't tell you exactly what that percentage is. I don't know.

Mr. WAXMAN. The majority of the vehicles on the road, that are already on the road, will be retrofitted?

Mr. LENTZ. Yes, vehicles on the road will be retrofitted.

Mr. WAXMAN. Now, I mentioned in my opening statement, and it has been well publicized, that I have been critical of your assurances to the American people, and I think we have a film that we can show you. Let's see if we can get that in.

[film shown.]

Mr. WAXMAN. We are having some trouble with our sound system.

Do you stand by that statement? Are you still confident that the two recalls that you put into place will solve the problem?

Mr. LENTZ. Let me make sure that it is very clear on my statement. Unintended acceleration, as I view it and define it, is any time that a driver removes their input from the accelerator and the vehicle continues at some speed. And there are many different causes for that. There are mechanical causes, whether it is a software issue in a transmission, whether it could be an idle-up from an air conditioner, whether it could be a faulty cruise control, whether it could be a pedal, in this case an entrapped pedal.

Mr. WAXMAN. What concerns me, Mr. Lentz, is that there seems to be a difference between your statement that was given on television and the statements other Toyota officials have given to our committee staff. Even your own counsel in a letter to us said that the sticky pedals become lodged in a partially depressed position, which typically does not translate into a sudden high speed acceleration event.

Also, it appears that you are trying to give assurances to people, convince them, that both of Toyota's recent recalls will address the problem. But our committee's investigation calls into accuracy your statement because 70 percent of the complaints of sudden unintended acceleration that come into Toyota's customer call line were from drivers of vehicles who were not included in either of these recalls.

How do you respond to that?

Mr. LENTZ. Well, if I could, the week, it seems like a week, the day that I was in New York doing interviews, there were a number of television interviews. There was also an audio conference call with about 150 journalists. And if I could read to you just a response that I made to a question?

Mr. WAXMAN. It is different from the one on television?

Mr. LENTZ. Yes.

Mr. WAXMAN. And is it more consistent with what we are being told privately by your counsel and by your own technical people?

Mr. LENTZ. I don't know exactly what it is.

Mr. WAXMAN. Let me ask you the question directly?

Mr. LENTZ. Please.

Mr. WAXMAN. Do you leave believe that the recall on the carpet changes and the recall on the sticky pedal will solve the problem of sudden unintended acceleration?

Mr. LENTZ. Not totally.

Mr. WAXMAN. What do you need to do?

Mr. LENTZ. We need to continue to be vigilant and continue to investigate all of the complaints that we get from consumers that we have done a relatively poor job of doing in the past.

Mr. WAXMAN. And why haven't you looked at the possibility of the electronics and the computer system being a possible fault, as we heard from the first witnesses, the witnesses on our first panel?

Mr. LENTZ. We have looked into the electronics. And based on the testing we have done in Japan and now Exponent, that you saw the initial response from their testing, we continue to test the ETCS in Japan, as well as now what Exponent is doing, and we have not found a malfunction. It doesn't mean that we stop.

Mr. WAXMAN. But Exponent's evaluation has been very, very criticized as not being well done, not scientifically, the sample was too small, and an unreliable report. Do you have something more from Japan that you haven't given us?

Mr. LENTZ. I am relying on the information that I have received from Japan, that they are confident that testing has been done in Japan and they are confident that there are not issues with the ECU.

Mr. WAXMAN. Well, Mr. Lentz, my time is up. Let me just tell you that I am not confident that you are looking for something that you don't think exists, because if you are not looking for it you

won't find it. And we had these two witnesses earlier who spent 3 hours and came up with the possibility that this sudden acceleration could take place because of the electronics and the computer system. That report that you gave to our committee from Exponent does not justify ruling that possibility out.

Mr. LENTZ. It is not intended to do that. That is just the beginning of their investigation. They have many, many more steps to complete, and we will provide you with the final when they get it done. That is just the beginning.

Mr. WAXMAN. That report is the beginning, but that beginning only started this month.

Mr. LENTZ. It started——

Mr. WAXMAN. In February of 2010. You are only starting to look at it, and you had an analysis done that was quite inadequate. We need to be sure that you are doing a full and adequate analysis of something you have denied, but which other witnesses have shown us is very possible as an explanation for the sudden acceleration.

Mr. Chairman, my time has expired. I know other members will want to pursue this with Mr. Lentz.

Mr. STUPAK. Thank you, Mr. Chairman.

Mr. Burgess for questions.

Mr. BURGESS. Well, Mr. Lentz, just to continue on that same line that the chairman was just following, yes, you have a responsibility to do these things, but there is also a Federal agency who is responsible for traffic safety that has an oversight role here. What have they told you about their independent testing of your electronic throttle control systems?

Mr. LENTZ. I don't know specifically of the results of the tests, other than there have been many, many cases in the past that have been opened, investigations, that have been closed and they have not found anything. I can't tell you specifically what their testing paradigm was.

Mr. BURGESS. Of course, we have had so much data in front of us today. There is one graph here that shows the complaints of unintended uncommanded acceleration that really start in 2002, which my understanding is that that is the year that the electronic throttle control actually came into being on your cars, is that correct?

Mr. LENTZ. I believe 2001 might have been the first year on LS, but it is very close.

Mr. BURGESS. You heard Mr. Gilbert testify here, and actually it was in response to Mr. Buyer's question, that he cut no wires when he did his simulation. Have your guys been able to reproduce his results without cutting wires?

Mr. LENTZ. Exponent in their initial study, I was up at Exponent a few weeks ago and they showed how they tested a vehicle for a vehicle short and other situations that involved the electronics from the pedal to the throttle ECM.

Mr. BURGESS. Were they able to reproduce what Mr. Gilbert showed?

Mr. LENTZ. No. In every case they went into an error code. As you, we received Mr. Gilbert's information very, very late.

Mr. BURGESS. Let me ask you this. Are you going to hire him now? It took him 3 hours to find the problem. If he is correct, we have to make that leap of faith.

Mr. LENTZ. But quite frankly, we encourage people to try to find this. It is not in our interest if a problem exists to not find it and not figure it out. So if it exists, we encourage the Mr. Gilberts of the world to look at it. It just seems a little too good to be true that somebody could figure this out in 3½ hours, when an industry has been looking for this for 10 years.

Mr. BURGESS. It may not be fair to ask you to testify to this, but you heard Mr. Gilbert's testimony. Do you or someone in your organization think it is possible that what he has described would be responsible for what happened, and if it did, would you expect to see some physical evidence, chafing of wires, crossing of wires, or something that actually brought two circuits into contact with the correct amount of resistance and then putting the 5 volts on top of it to create uncommanded acceleration? Is there anyone in your organization who is able to talk to us about that?

Mr. LENTZ. Vince is here, he is one of our attorneys and he has been working with Exponent. And at some point we would love to get Exponent and Mr. Gilbert maybe together. But if you would like, Vince can give you a very quick explanation of what they found. I am not an engineer, so I would probably mess this up.

Mr. BURGESS. Since we are taking testimony under oath, I don't know what is permissible here.

Let me just ask you a question on the fix, because I know your dealers in my area, Toyota of Lewisville, they have been Johnny-on-the-spot with this. They have been getting people in, it takes them 20 minutes to fix it. But if they are fixing the wrong problem and they really need to be developing whatever you call the advanced override for the brake system, then you wonder if we are going to have to call people in for yet another fix to the problem.

Now, what actually fixes the accelerator pedal? What have you developed that will fix that problem on the recall?

Mr. LENTZ. There are two different issues. In the case of a sticky accelerator pedal, they are actually putting in a precision cut steel plate.

Mr. BURGESS. We call that a shim, right?

Mr. LENTZ. Yes.

Mr. BURGESS. How many different sizes of precision cut plates are you producing?

Mr. LENTZ. I believe it is either seven or nine.

Mr. BURGESS. Seven or nine.

Mr. LENTZ. Yes.

Mr. BURGESS. Presumably this material that is hydroscopic and absorbing water and becoming incompatible with proper function, presumably that is a precision manufactured component, is it not?

Mr. LENTZ. I would assume so. I don't know anything about the manufacturing.

Mr. BURGESS. The fact that you have to have seven or nine different size shims?

Mr. LENTZ. I believe it has to do with the amount of wear that is actually on that shim. So when the technician takes the pedal

off, they actually measure how large the gap is, and that determines the size of the shim that they put in, the steel plate.

Mr. BURGESS. But it does strain credulity that a precision-designed chronometer, this shim that we are talking about, it just doesn't seem reasonable that there would have to be so many different sizes in order to fix the problem if the problem was the pedal absorbing atmospheric moisture.

Mr. LENTZ. Well, the size difference is in very small millimeters. To the naked aye, you can tell the difference between the biggest and the smallest, but as you go down the row, they are very, very close in total size.

But what it really does is it ensures that excess friction won't build up in the pedal. And what happens in the past is with wear it gets shiny and once humidity is added to that, it actually builds up too much friction, and that is when the pedal starts to bind or possibly stick.

Mr. BURGESS. Now this fix on this recall, the National Highway Traffic Safety Administration, they have signed off on this and feel that this fixes the problem? Have they looked at it themselves?

Mr. LENTZ. They don't sign off. We show them our solution and they don't disagree. So we are confident it is the right fix.

Mr. BURGESS. What about the fix of putting the advanced brake override system in?

Mr. LENTZ. Advanced brake overrides in production vehicles has already started on vehicles like ES and Camry.

Mr. BURGESS. But for those of us that have older model Toyotas that wanted to have that degree of safety built in for our families, how do we go about getting that done?

Mr. LENTZ. It is a reflash on those seven vehicles, and it varies by vehicle by model year.

Mr. BURGESS. By reflash, you mean you reset the computer?

Mr. LENTZ. It is a reflash of the computer to be able to add that.

Mr. BURGESS. Technically, how difficult is that to do?

Mr. LENTZ. It takes anywhere from 15 to 30 minutes.

Mr. BURGESS. And how much does it cost?

Mr. LENTZ. We are providing that.

Mr. BURGESS. It just seems reason that that is something that really should happen in addition to all these other things, just to be on the safe side.

Mr. LENTZ. It is for added consumer confidence.

Mr. BURGESS. Thank you.

Mr. STUPAK. Thank you, Mr. Burgess.

On this rebooting of this computer there, why are only some of the vehicles going to be rebooted and not the other ones?

Mr. LENTZ. It depends on the feasibility of the unit. Some of the computers have different types of chips in them. Some are not rewritable. Basically they are hard coded.

Mr. STUPAK. So can't you rewrite the programs so that all of your vehicles are covered? What do you say to these owners who are not going to have this safety feature added to it? They are just going to continue to drive down the road and hope they don't have a sudden unintended acceleration?

Mr. LENTZ. Well, again, the possibility of that happening is very, very slim, but understanding if it happens to you, it is a very, very important incident.

Mr. STUPAK. Sure. Very, very slim. Let's take a look at that. From slim let's go to shim.

You talked a lot about the shim there with Mr. Burgess, but the documents we asked for, and I put this in our letter on February 22nd on the second page, I was going to ask you this question. We wrote to you on February 2nd to request any analysis of Toyota that shows sticky pedals can cause some unintended acceleration. You didn't produce any analysis. In fact, your counsel actually said, "Typically, a sticky pedal does not translate into a sudden high speed acceleration event." So, this shim isn't going to solve this sudden unintended acceleration.

Mr. LENTZ. It will prevent unintended acceleration. High speed, most likely not, because in the few incidents where we had a pedal stick, it is a very low throttle opening.

Mr. STUPAK. As Chairman Waxman pointed out, of the complaints you have in your own database, approximately 70 percent of the sudden unintended acceleration events in your own database involves vehicles that are not subject to the floor mat or the sticky pedal recall. So 70 percent of the problem isn't being addressed by the recall, correct?

Mr. LENTZ. Well, a couple of issues. The most important part about it is those in many cases are customer generated—I don't want to call them complaints, but feedback to us that they are having an issue. What is most important is we are able to investigate those as quickly as possible so we can understand what is going on. And in the past, we have not done a very good job of doing that.

Mr. STUPAK. You haven't done a very good job doing that. We had Mr. Kane on the last panel, they had over 2,000 complaints, and when they went through it, he figured maybe half of them, 1,130-some, cannot be explained other than what the driver said, which is this sudden unintended acceleration. You disagree with that?

Mr. LENTZ. Well, I am not sure if his database is sudden or unintended. I don't want to get into what "is" is here. But there is a big difference between unintended and sudden unintended.

My understanding is the database through NHTSA includes other things such as surges, whether it be from a cruise control, a transmission, or other issues. So I can't tell you from the data that they are using.

Mr. STUPAK. But some of the complaints are like recently, I put it into park, I popped over the curb and hit a tree. One gentleman went off a cliff and his wife died.

Mr. LENTZ. Yes.

Mr. STUPAK. And that wasn't a high speed. But that was a sudden unintended acceleration. It doesn't always have to be at high speed.

Mr. LENTZ. Correct.

Mr. STUPAK. That is why I think all of them have to be taken seriously.

Mr. LENTZ. Yes, there is no question.

Mr. STUPAK. So for 70 percent of those complaints in your database, we don't have an answer yet.

Mr. LENTZ. There are answers with other mechanical breakdowns, from transmissions, from other engine surges. There is pedal misapplication that is the possibility as well. And we are not here blaming customers, but it does take place.

Mr. STUPAK. But it sort of sounds that way. I don't mean to be nitpicking here, but when Mr. Waxman asked you a question about unintended acceleration, you said "as I would define it." That is what you said to the chairman. And it seems like when we get this sudden unintended acceleration, it is the way Toyota wants to define it, not the customer.

Mr. LENTZ. Well, but I think we are defining it as a customer is defining it, and that is a much broader spectrum of any type of surge or movement in the vehicle that the customer doesn't expect to take place. And that can happen from a number of different sources. To me, I would rather have the broad spectrum to look at than a more narrow spectrum of high speed.

Mr. STUPAK. Let's talk about the customer here, because this started in the 2001–2002 model year. You went from the mechanical to the computer electronically-driven throttle system. And by 2004, NHTSA has presented Toyota with a document showing you a 400 percent increase in complaints. That was in 2004.

We learned, and you testified or mentioned in one of your interviews, that you had a recall in Europe, in what, April or May, of this sudden acceleration. Didn't you do some things in Europe, in England, in Ireland? Did you have a recall there?

Mr. LENTZ. That is on the sticky pedal?

Mr. STUPAK. Right.

Mr. LENTZ. Yes.

Mr. STUPAK. So in Europe, excuse me, in England and Ireland, is that just sticky pedal?

Mr. LENTZ. That was a sticky pedal in Europe.

Mr. STUPAK. That is in response to sudden unintended acceleration?

Mr. LENTZ. Again, it is in response to unintended, the possibility of unintended acceleration, which is a safety issue. To me——

Mr. STUPAK. When you did the recall in Europe and did your fix in Europe, in England, did you notify NHTSA of this?

Mr. LENTZ. We knew about it. I knew about it in November——

Mr. STUPAK. But did you notify NHTSA?

Mr. LENTZ. We notified NHTSA as soon as we knew about the situation in the U.S. We didn't——

Mr. STUPAK. Wait a minute.

Mr. LENTZ. November of 2009.

Mr. STUPAK. OK. It took you until November of 2009 when you have had a 400 percent increase in complaints since 2004 to realize there might be a problem in the United States after a recall in Europe?

Mr. LENTZ. Well, I am speaking specifically about sticky pedals. Those don't go back to 2002. The sticky pedal event began in the United States—there was one instance I believe in 2006 or 7. But it was October of 2009 that we had three Corollas, and that gen-

erated our investigation and we notified NHTSA immediately that we had seen that.

Mr. STUPAK. And you still—do you have any analysis, any evidence, that sticky pedals can cause a sudden unintended acceleration?

Mr. LENTZ. It depends on the definition of "sudden." If it means that you can be depressing a pedal, take your foot off the pedal and the car continues at speed, it does cause that.

Mr. STUPAK. Quoting your counsel, typically it does not translate into a sudden high speed acceleration event, sticky pedals. So sticky pedals isn't doing anything about sudden high speed?

Mr. LENTZ. Not for high speed.

Mr. STUPAK. And you agree with me there is 70 percent of the customers in the database we still don't have an answer for their unintended acceleration, if I can use that word?

Mr. LENTZ. There are many factors that lead to it.

Mr. STUPAK. But 70 percent of them we don't have an answer for, is that fair to say?

Mr. LENTZ. That is probably fair to say.

Mr. STUPAK. If I can just ask you one more question. This is Saturday's Washington Post, February 20th. It is on the righthand side. "Suspicion lingers over acceleration in Camrys." OK. The reason why I bring it up is because they cite three fatals of 2005 Camrys.

It says, on each of these three fatal episodes, the car involved was a 2005 Toyota Camry, a model that the company has indicated is free of acceleration defects. It has not been recalled for either the sticky pedal or the floor mat interference, is that true?

Mr. LENTZ. I believe so.

Mr. STUPAK. Any suggestions on why the Camry has this acceleration problem?

Mr. LENTZ. When the model year changed in 2004, there was an acceleration issue that had to do with the transmission, that there was a surge between 38 and 42 miles per hour, and that surge was caused by a torque converter locking up that wasn't very smooth. It was a shift shock basically. And that was reported by customers as an unintended acceleration. That software was changed, and that tended to subside that particular issue.

Mr. STUPAK. Have you gone back and fixed the software in the 2005 Camrys then? Because these fatals I am talking about is the one that went across the parking lot and went over a 70-foot cliff where his wife died.

Mr. LENTZ. Again, I don't know that.

Mr. STUPAK. Have you put out a recall on the 2005 Camry to fix this? A recall?

Mr. LENTZ. On the pedal?

Mr. STUPAK. On this torque issue.

Mr. LENTZ. The torque converter was 2004.

Mr. STUPAK. These are 2005 Camrys.

Mr. LENTZ. I understand.

Mr. STUPAK. We still have Toyota vehicles that have acceleration and we don't know what the problem is?

Mr. LENTZ. There is the possibility through either mechanical or human or some other type of error that could cause that.

Mr. STUPAK. Thank you.

Mr. Barton, questions?

Mr. BARTON. Thank you, Mr. Chairman. Thanks for those questions. I thought they were excellent.

Mr. Lentz, what is your background? You said you are not an engineer. What are you?

Mr. LENTZ. Sales and marketing. I have a degree in marketing, in economics, and an MBA in finance.

Mr. BARTON. OK. So you do agree from a marketing standpoint that what is going on now is fairly detrimental to your company. Two of your principal dealerships in Texas yesterday met with me, one in Houston and one in Arlington, and their sales are down about 30 percent. I would assume from a marketing standpoint that is not a good thing.

Mr. LENTZ. No, sir, it is not.

Mr. BARTON. OK. You are the CEO of Toyota in the United States. How much authority do you have to solve this problem? Can you pretty well call the shots, or do you have to ask for authority from headquarters in Tokyo?

Mr. LENTZ. Well, I am the Chief Operating Officer for the U.S. From a marketing standpoint, I call the shots.

Mr. BARTON. A marketing standpoint.

Mr. LENTZ. If you are talking about from a defect standpoint or a determination of a recall standpoint, those decisions have been made in Japan in the past.

Mr. BARTON. OK. And I am not saying that is a bad thing.

Mr. LENTZ. But it is changing.

Mr. BARTON. I just want to know how far you can go if you make a promise today that you can deliver on it.

Mr. LENTZ. But that is changing. There are a number of different organizations being put into the company that are going to make things much more transparent around the globe, much more transparent with regulators, and allow us to have input into defect decisions that in the past were always made in Japan. There will be a North American on the committee that makes defect recommendations now, and there will be a process if we don't agree with the decision of that committee that we can have a process to override. Today, that is not existent.

Mr. BARTON. In the prior panel, I don't know if you were in the room or not, but we had a couple I believe from Tennessee, the Smith couple, and the wife, her car experienced an out-of-control acceleration for a number of minutes. She was literally in this car long enough she put it in neutral, she put her foot on the brake, she tried to turn the ignition off, she put it in reverse, she called her husband on her cell phone. That was not a sticky pedal because of a floor mat. Something happened to that car that is unexplainable so far.

Now, we normally when something bad happens in a product, if there is a plane crash, we go to the scene and investigate the plane. If there is a bridge collapse, we go to the collapse of the bridge and we look for structural defect, or design defect if there is a building collapse.

In this case, we have a car that had out of control acceleration and apparently all that was done was it went to a dealership and

they did a routine computer program review. Why has Toyota not obtained that vehicle and taken it to your laboratory and done everything possible to discover what caused the malfunction?

Mr. LENTZ. I don't know specifically in her case, other than I did hear her comment that she had mentioned that a field technical specialist looked at her car.

Mr. BARTON. A field technical specialist.

Mr. LENTZ. Right. That is somebody that works for Toyota.

Mr. BARTON. So you sent one person you are paying $50,000 a year, and they spent an hour and they hooked up their little program and they said we don't see a problem, and they filled out a form we don't see a problem. You have got a multi-billion dollar company that is experiencing a multi-billion hit in the marketplace. Why in the world won't you get that vehicle and do everything possible to determine—it really doesn't matter that you have got 5 million vehicles that are performing flawlessly if you have got 10 that have failed. Her problem is not a floor mat problem. It is not a floor mat problem.

Mr. LENTZ. I don't know. I can't——

Mr. BARTON. Well, I know. I take her at her word. In fact, she is going down the highway at 100 miles an hour, she has got enough sense to pull the damn floor mat from underneath the pedal if that is what is causing it. You know that and I know that. You can't say it because of all the lawsuits. So why don't you all get the cars that have had the problem, and if you need NHTSA there to verify what you are doing, get them. But if I am President of Toyota, I am going to get the cars that we know had a problem and I am going to do everything I can to find out what caused that problem, and then I am going to fix it if it is fixable.

With Gulf States Toyota and Vandergriff Toyota, those are good people. They want to sell your cars and they are doing this fix, and in my opinion it is a sham. Not because they are not fixing that. They are making it feel better. They are shortening the pedal about an inch and a half and putting this shim that Mr. Burgess has talked about so that it feels differently. But unless it is a floor mat issue, which in some cases it may be, you are not solving the problem that Mrs. Smith had. She didn't have a floor mat problem.

So, again, why don't you get that car, it is still in existence, and check it out? Tear it apart. Do whatever. And do it with witnesses that are credible, because my guess is you have got some really, really smart engineers.

Mr. LENTZ. Yes, sir.

Mr. BARTON. Hopefully they will shoot straight with you, and whatever the issue is, it is—you know, I am an engineer. Engineers are trained. We identify the problem, develop an optimal solution, implement the solution. You probably can solve this problem, if you really try to.

Mr. LENTZ. Well, in terms of going out and seeing what the situation is, we today have two engineering centers here within the U.S. with about 80 engineers. We are adding three more of those. Because our goal is on any unintended acceleration, is to be able to contact the customer——

Mr. BARTON. You are not answering. Why won't you get that car and check it out?

Mr. LENTZ. That is what I am saying. The goal is with these added centers and added engineers, is within 24 hours we want to be at that vehicle and we will inform NHTSA of the situation if they would like to join us. NHTSA has joined us in some of these cases in the past. So we can get that car and see exactly what is going on.

Mr. BARTON. But you haven't gotten the Smiths' car?

Mr. LENTZ. The Smith car, I have written down to find out what happened with that. I have to tell you——

Mr. BARTON. Again, my time has expired. If I am CEO and I have the authority, as soon as I walk out of this hearing, I pick up the phone and I say get that car. If I have to pay $100,000, get that car, put the best engineers on it, let's tear the damn thing apart and let's find out what is happening to it. Because you can do all this other stuff, but if you don't go where the problem is, you know, you are probably never going to figure out what is going on.

Mr. LENTZ. I can tell you, listening to Mrs. Smith, I am embarrassed for what happened, and we are going to go down and talk to them and get that car so that they feel satisfied. I want her and her husband to feel safe about driving our products. I was embarrassed to hear the story.

Mr. BARTON. Well, my time has expired. We are happy—I have a GM assembly plant in my district, so I have got a good relationship with General Motors. I have a Toyota sub-assembly vendor plant in my district that makes component parts for Toyota. So I am not on any—I want the truth and I want, whether my constituency wants to buy a GM product or a Toyota product or any other product in the automotive sector, to feel that those products are safe, period. And I have confidence in your engineering department. You can solve it if your legal department will let you solve it.

Thank you, Mr. Chairman.

Mr. STUPAK. Mr. Dingell for questions. Mr. Dingell waived his opening statement and also waived questioning the last witness, so I will give him some leeway with this panel.

Mr. Dingell for questions.

Mr. DINGELL. Mr. Chairman, I thank you for your courtesy.

Mr. Lentz, please tell me the date that Toyota first heard of incidents of sudden acceleration in its vehicles sold in the U.S.

Mr. LENTZ. I don't know the answer to that.

Mr. DINGELL. Please submit that to the record.

Now, Mr. Lentz, please tell me the date on which Toyota commenced the first recall to address this problem in the United States?

Mr. LENTZ. If I don't know the answer to the first one, I don't know the answer to the second one.

Mr. DINGELL. Please submit that for the record. I had heard that the first notice of it in the U.S. was in November, and that your first notice of it in Europe was in May of the same year. Is that correct? Yes or no?

Mr. LENTZ. I am sorry. I thought when you talked about sudden acceleration——

Mr. DINGELL. I am talking about sudden acceleration.

Mr. LENTZ. But in November, sudden acceleration has been around in the industry for 15 or 20 years.

Mr. DINGELL. I just want an answer, not a speech.

Now, since 2001, how many complaints of sudden unintended acceleration in vehicles sold in the United States has Toyota Motor Sales USA received?

Mr. LENTZ. I don't know that number.

Mr. DINGELL. Please submit that for the record.

How many of those complaints has Toyota Motor Sales USA forwarded to NHTSA?

Mr. LENTZ. I don't know that number.

Mr. DINGELL. Please submit that for the record.

Mr. Lentz, yes or no, prior to the U.S. recalls, were you empowered to authorize recalls for Toyota products manufactured or sold in the United States?

Mr. LENTZ. No.

Mr. DINGELL. Who was responsible for that?

Mr. LENTZ. Japan is responsible.

Mr. DINGELL. That was Japan's responsibility.

Now, Mr. Lentz, yes or no, is it true that the Toyota recall process for vehicles manufactured and/or sold in the United States requires the decisions concerning these recalls to be made in Japan or with Japanese oversight? Yes or no.

Mr. LENTZ. Yes.

Mr. DINGELL. Mr. Lentz, yes or no, is it true that Toyota had not reached a decision about whether to recall vehicle models linked to sudden unintended acceleration prior to being visited by Acting NHTSA Administrator Ron Medford in December 2009? Yes or no.

Mr. LENTZ. I think you have to be more specific about is that the floor mat recall issue or is that the sticky pedal issue?

Mr. DINGELL. Well, apply it to both.

Mr. LENTZ. OK. In the case of the sticking pedal issue, I know Mr. Medford went to Japan. I can't tell you specifically if that is the reason. Obviously, NHTSA was clear with us that we were going to have to do something with those vehicles.

Mr. DINGELL. And you had not previously to that time done anything?

Mr. LENTZ. In the case of the sticky pedal situation, I first knew about that in November of 2009. We had reports of three vehicles——

Mr. DINGELL. And he went there in December of 2009.

Mr. LENTZ. Correct.

Mr. DINGELL. Had you done anything about a recall prior to that time?

Mr. LENTZ. No, sir. It was still under investigation.

Mr. DINGELL. Now, Mr. Lentz, yes or no, did Acting Administrator Medford's December 2009 visit to Japan and discussions with Toyota executives have any influence on the decision to recall vehicle models linked to the sudden unintended acceleration problem?

Mr. LENTZ. Again, if you are speaking of the sticking pedal, I don't know. Specifically I was not in the meeting, but I would think it probably did.

Mr. DINGELL. Now, Mr. Lentz, in correspondence addressed to this committee, certain elected officials have communicated their concern that the United States Government's financial stake in Chrysler and General Motors represents a conflict of interest that may be influencing its regulation of Toyota. If that is true, I am outraged.

Do you believe that that statement is true, or not?

Mr. LENTZ. I don't believe that is true. I think the government is acting fairly.

Mr. DINGELL. Thank you.

Now, Mr. Lentz, yes or no, are the reporting requirements for early warning of possible vehicle safety defects different in Japan than in the United States?

Mr. LENTZ. I am not familiar with the process in Japan.

Mr. DINGELL. Would you submit that for the record, please?

Mr. Lentz, are the Japanese requirements in regard to this matter more or less stringent than American standards?

Mr. LENTZ. Again, my responsibility is the United States. I don't know the standards for Japan.

Mr. DINGELL. Now, Mr. Lentz, if the Japanese requirements are less stringent, does that affect how Toyota evaluates potential defects in its vehicles and influence what information the company provides to U.S. Regulators? Yes or no.

Mr. LENTZ. I would think not. The decision to make a recall in the United States is based on our experience in the United States.

Mr. DINGELL. Now, Mr. Lentz, yes or no, has Toyota definitively ruled out nonmechanical failures as the source of sudden unintended acceleration in vehicles recalled in late 2009 and early 2010?

Mr. LENTZ. We never rule out anything that could cause sudden unintended acceleration?

Mr. DINGELL. So you have not ruled that out?

Mr. LENTZ. We are vigilant and we continue to look for potential causes.

Mr. DINGELL. Now Mr. Lentz, put another way, has Toyota definitively determined that electromagnetic interference with or other failures in electronic throttle controls are the cause of sudden unintended acceleration in the vehicles recalled in 2009 and early 2010, yes or no?

Mr. LENTZ. We are studying, through the Exponent study you have now which was preliminary, there was a lot more investigation to go on. So it's been looked at as well as there is going to be an advisory board on quality and safety for the United States.

Mr. DINGELL. Thank you. Now Mr. Lentz, I understand from your testimony that Toyota has called upon Exponent to conduct tests on certain Toyota vehicles to determine possible causes of unintended acceleration. That is true, is it not?

Mr. LENTZ. Exponent is checking our ETCS, yes.

Mr. DINGELL. Now Mr. Lentz, did the report conclude that electromagnetic interference was a potential cause of sudden unintended acceleration, yes or no?

Mr. LENTZ. It has not tested electromagnetic as of yet. What you've seen is——

Mr. DINGELL. So they have not tested it so they don't know.

Mr. LENTZ. It has not been tested yet. It is going to be tested, and we will provide you with the final testing when it's available.

Mr. DINGELL. Thank you. How many models of Toyota vehicles did Exponent test?

Mr. LENTZ. I do not know that.

Mr. DINGELL. How many did they not test?

Mr. LENTZ. When I was there, I saw five different models being tested.

Mr. DINGELL. Would you please submit the response to those questions for the record, please. Now Mr. Lentz, yes or no, do you feel that this is an adequate sample of vehicles for the purposes of Exponent's tests?

Mr. LENTZ. If you look at——

Mr. DINGELL. You said yourself, five vehicles there.

Mr. LENTZ. If you look at the ETCS system, the system from vehicle to vehicle is very, very similar. The throttle body may be a different size, but the general architecture of the system is similar.

Mr. DINGELL. Mr. Lentz, I am just a poor Polish lawyer from Detroit. Would you please tell me yes or no so that I can understand it.

Mr. LENTZ. I don't know how to answer that in a yes or no. I think they are testing multiple vehicles. They are testing the system, not particularly how does it work on a Camry versus an FJ Cruiser.

Mr. DINGELL. Thank you, Mr. Lentz. Now, yes or no, are the event data recorders EDRs installed in all Toyota vehicles sold in the United States?

Mr. LENTZ. As of today, no.

Mr. DINGELL. As of today?

Mr. LENTZ. As of today they are not. EDRs are not in 100 percent of our vehicles.

Mr. DINGELL. Yes or no, would these EDRs contain information such as recordings of vehicle component failures that would be useful to investigators in determining the cause of an accident?

Mr. LENTZ. I don't know exactly what they provide. I can tell you they provide information five seconds prior and one second after an accident. I can tell you that by the end of——

Mr. DINGELL. Would you please, Mr. Lentz, submit to me for the record the answer to that question. Now, can data from—again, yes or no, from EDRs installed in Toyota vehicles be easily read by non-Toyota personnel, such as NHTSA investigators?

Mr. LENTZ. Yes, with the proper scan tool of which we are going to produce and get 100 of them in the United States by April.

Mr. DINGELL. So they have not been previously made available to NHTSA?

Mr. LENTZ. There is only one prototype in the United States today, but we will take available——

Mr. DINGELL. All right. What percentage of your vehicles imported into the United States or are manufactured here have EDRs?

Mr. LENTZ. I don't know the exact percentage. I think it's all vehicles except for—I can—if I can look at notes, I can give you——

Mr. DINGELL. Please submit that for the record. Mr. Lentz, in general, prior to Toyota recalls this year and last, by whom and

where could such data from Toyota EDRs be read in the United States?

Mr. LENTZ. I don't know the answer to that because there was only——

Mr. DINGELL. If you would please, Mr. Lentz, submit that for the record.

Mr. LENTZ. There is only one prototype tool available in the United States today.

Mr. DINGELL. So whoever wanted to look at that had to go look at that prototype, right?

Mr. LENTZ. Yes. And I don't know how accurate that prototype tool is.

Mr. DINGELL. So you don't know how accurate it was?

Mr. LENTZ. It's a single prototype tool, the standard for EDRs comes in December of 2012.

Mr. DINGELL. Now, Mr. Lentz, yes or no, did NHTSA require Toyota in 2006 to conduct the tests on electronic throttle components for a 2006 Camry?

Mr. LENTZ. Could you repeat the question?

Mr. DINGELL. Did NHTSA require Toyota in 2006 to conduct a test on an electronic throttle component for a 2006 Camry?

Mr. LENTZ. I don't know the answer to that.

Mr. DINGELL. Please submit the answer for the record. Now Mr. Lentz, if so, did Toyota or a designated third party conduct the tests?

Mr. LENTZ. I don't know the answer to that.

Mr. DINGELL. If it was conducted by a third party, will you please tell the committee its name and submit an answer to those two questions for the purposes of the record, please.

Mr. LENTZ. Congressman, I don't know the answer but we can get that information for you.

Mr. DINGELL. Now Mr. Lentz, are reports on this kind of inquiry generated by Toyota by third parties or by its own internal investigations submitted to NHTSA?

Mr. LENTZ. I'm not sure I understand the question.

Mr. DINGELL. Well, you have these studies being made in-house or by others and the question is, are the reports on those studies submitted to NHTSA or not?

Mr. LENTZ. The study that's being done by Exponent will be given to the public, to Congress as well as NHTSA.

Mr. DINGELL. Has it been done so prior to this time?

Mr. LENTZ. I don't know which specific study you may be speaking of.

Mr. DINGELL. Well, I will let you choose. Have any of them been given to NHTSA or have they not?

Mr. LENTZ. I don't know, given—you know, given my responsibility which is on the sales end of the company, I can't——

Mr. DINGELL. You have been very gracious and kind with your time. But what I am trying to figure out is, are you responsible for these matters? You don't seem to have the information that I have been questioning for. And I am curious, you told us that you were responsible for sales. Are you responsible for manufacturing? Are you responsible for safety? Are you responsible for decisions of this sort? Are these decisions made elsewhere in Japan?

Mr. LENTZ. I am not responsible for manufacturing. I am not responsible for defect or quality decisions. Defect decisions, recalls specifically, are, in fact, made in Japan.

Mr. DINGELL. Mr. Chairman, you have been most generous with the time. And Mr. Lentz, I thank you for your courtesy.

Mr. STUPAK. Mr. Rush for questions, please.

Mr. RUSH. Thank you, Mr. Chairman. Mr. Lentz, I see some attendees who are sitting in the front row with some buttons on which say "I am Toyota America." Are these some of your employees?

Mr. LENTZ. These are some of the employees from our assembly plants that do a great job for us.

Mr. RUSH. Right. Well, I want to commend you on your diversity. I think that you have a very diverse workforce, and I want to welcome all of your workers here.

Mr. LENTZ. Thank you, sir. They are hardworking Americans.

Mr. RUSH. Thank you. We have heard some compelling and disturbing testimony from the Smiths this morning. The committee learned over the course of its investigations that Mr. and Mrs. Smith are not alone in their experience with sudden unintended acceleration and also with their frustrations of dealing with Toyota. In fact, Toyota has received thousands of complaints from its customers about frightening sudden unintended acceleration incidents, and many of these incidents, unlike the Smiths, resulted in serious injuries or even fatalities. And I would expect your company would respond to these complaints with a sense of urgency and complete a serious investigation of these problems. But that's not exactly what Toyota did in the Smiths' case.

One of the most striking things that the committee heard during this investigation and also from testimony is how dismissive Toyota has been on this customer's report of sudden unintended acceleration. Mr. Lentz, just to tell you, I have received just a few moments ago this text written to one of my staff members from my district in Chicago. I'm going to try to pull it up.

It says here—it's from one of the executives at a local newspaper, the Chicago Defender. And it says, "Stephanie"—this is one of my staff members—"if Representative Rush wants to put a face to this Toyota mess, my sister-in-law died December 28 in a car accident near Dallas, Texas. She and three others were riding in a Toyota Avalon when it left the road, hit a tree, flipped in the air and landed upside down in a pond. Everyone died. The police said there was no evidence of any braking, giving rise to the idea that it was an accelerator problem. My sister-in-law, Sharon Love Ransom, was a senior executive with IBM. This is another indication. You have indicated to this committee this morning or this afternoon that you will retrieve the Smiths' car. Would it be asking you too much to look into this matter, and if possible, treating the car involved in this accident?

Mr. LENTZ. If it's the accident that I'm thinking of—and we can have our staff check—both Toyota engineers and NHTSA did, in fact, inspect that vehicle.

Mr. RUSH. And do you know what they determined?

Mr. LENTZ. I don't know what was determined.

Mr. RUSH. Would you check further into this?

Mr. LENTZ. Yes, we will check into it if it's been the car.

Mr. RUSH. Has there been any issues with the Avalon brand?

Mr. LENTZ. There have been cases of both sticking pedals as well as floor mat entrapments, yes.

Mr. RUSH. Mr. Lentz, do you have any reason to believe that out of the thousands upon thousands of complaints that Toyota or Lexus owners are inventing these terrifying stories about their driving experiences?

Mr. LENTZ. No. But from an engineering standpoint, it's critical that we get information so that we can go and investigate today. In many cases, information that's submitted on NHTSA's Web site, unless there is an investigation opened, we don't have the name of the customer or the full VIN number. And I think going forward, one thing that we should think about doing is make that available to the manufacturers so that we can cross-reference that against our databases, and we can investigate these much sooner and not have to wait for an investigation to be opened to be able to do that.

Mr. RUSH. From a marketing perspective, don't you feel as though Toyota and yourself—don't you feel as though you owe your customers who some have gone through some serious injuries, a lot of hurt and pain, don't you feel as though that you owe them a sincere apology for your company, your vehicles, your product causing them sincere pain? Can't you just apologize to them?

Mr. LENTZ. Yes, sir. Yes, sir. We have. Because I will tell you—and whether it is an accident, an injury—I mean, we heard the Smiths today. You didn't have to have a death to understand the terror that she had from that accident. I mean, that's a terrible thing to have to put one of our customers through. And it doesn't even have to be an accident. I mean, we have apologized to our consumers just for the concern that we have given them with their current recalled vehicles. We are sincerely sorry for that concern and anxiety we put people through. I mean, myself, my wife drives a Toyota Prius. It's a recalled vehicle. My son drives a Prius. It's a recalled vehicle. My mother-in-law is in an ES 2006. My father has a Sequoia. They're recalled vehicles. I want to make sure that my loved ones are safe as well.

Mr. RUSH. But switching back over to the engineering. But you still have been pretty evasive here about the cause, the actual cause of all this pain and suffering. There are a lot of inconsistencies there and a lot of dualities that you are operating from. I am not sure if the apology—what is it based on? Is it sincere? Is this really a problem from an engineer's perspective that you assume responsibility for?

Mr. LENTZ. Any time there is one death in one of our vehicles, that—that pains us to have it take place, regardless of how it happens. But it's critical today—and we weren't doing a good job in the past—of investigating those quickly enough, especially when it had to do with unintended acceleration. And with adding these new engineers, these swat teams that we're going to be able to get onsite as rapidly as we can, our goal is to make it in 24 hours. We need to be able to do that so we can understand what's happening and make the necessary changes so that it doesn't happen again. I can tell you, I lost a brother in an accident a week after his 30th birthday, and that was 20-some years ago, and there is not a day that

goes by that I don't think of that. So I know what these families go through.

Mr. RUSH. Thank you very much, Mr. Chairman.

Mr. STUPAK. Thank you, Mr. Rush. Mr. Markey, questions, please.

Mr. MARKEY. Thank you, Mr. Chairman. Mr. Lentz, it seems to me that Toyota got the first dilemma back in 2000 when the British ordered a Lexus recall due to acceleration problems. Toyota got a second alarm back in 2003 with the Canadian recall. Toyota is a global corporation. Those two alarm bells should have sent your engineers scrambling to figure out what was wrong and what was needed to be done to fix the problems. Instead, the same types of problems cropped up in additional Toyota models, resulting in the recalls that bring you here today.

So instead of deploying your engineers after Toyota got those early warnings in 2000 and 2003, they waited until problems cropped up in the United States, and then Toyota deployed lawyers and lobbyists to convince the Department of Transportation that this was a small floor mat issue and not something more serious. And that, Mr. Lentz, has done a disservice to Toyota's customers and ultimately also to Toyota's dealers and to Toyota's employees. So according to documents obtained by my office, Toyota recalled a Lexus in the United Kingdom in 2000 and a Celica in Canada in 2003 because of floor mats were entrapping the accelerator pedal and the exact same problem that has caused fatalities in this country. Why didn't Toyota take immediate action to prevent the much later accidents when Toyota clearly knew the problem existed as far back as 2000?

Mr. LENTZ. Specifically on those two incidences, I can't tell you the specifics of those because I do not know. But I can tell you that a weakness in our system has been that within this company, we didn't do a very good job of sharing information across the globe. Most of the information was one way. It would flow from the regional markets, like the United States, Canada or Europe back to Japan.

Mr. MARKEY. So what you are saying is that ultimately the decisions are made in Japan and that notwithstanding problems that are identified in the United Kingdom, in Canada, the information goes back to Toyota headquarters in Tokyo and whether or not you, in America, are given orders to correct the problem identified in other countries, is not in your hands, is that what you are saying?

Mr. LENTZ. Correct. But that is changing. There is going to be a number of different groups set up. There is an overall quality group that Akio Toyoda is going to chair.

Mr. MARKEY. Well, you know, that's an important change. It obviously is a policy that I'm sure all Americans are shocked to learn existed. That is, that this system of quality control that Toyota represents to be at the heart of their corporation was not something that shared information about defects in products that were being sold in the United States even though it was identified in other countries. And that's just unacceptable. It's just plain unacceptable to the consumers here in America. Let me move forward quickly if I can. You have told The Today Show that the sticky accelerator pedal and the mat problems were the only problems and that you

fixed them. You have said today that you are only just beginning to test whether or not the electronics are the problem and that you have acknowledged that you can't rule out that possibility. So the reality is, you don't know what is causing all the vehicles to suddenly accelerate and you don't know if you've solved the problem, do you?

Mr. LENTZ. There are many, many causes. In terms of the recalled vehicle——

Mr. MARKEY. But you don't know if you've solved the problem.

Mr. LENTZ. I don't think anyone any manufacturer knows 100 percent exactly what is causing——

Mr. MARKEY. No. What I'm saying is that since you are only beginning the investigation, you don't know if you've solved the problem, is that correct?

Mr. LENTZ. ETCS has been looked at in the past in Japan as they developed the products.

Mr. MARKEY. You said that you had solved the problem. The truth is, you don't know if you have solved the problem, isn't that correct?

Mr. LENTZ. Let me clarify my statement. In terms of solving the issues of those recalls, we've solved the problem. And if—in documents that we have also sent you, when I did a number of interviews with journalists, I made it quite clear that my feeling is—and this is a quote—my feeling is that these two fixes solve the issues that we know of. Are we going to remain vigilant? Of course we will. But we are confident that entrapment is a cause. We are confident that this pedal issue is a cause. And we are confident in those two fixes. But we are also confident that from what we know today it is not an electronics issue.

Mr. MARKEY. What you know today. But again, you're only at the beginning of your investigation, so you don't know what caused the problem, do you?

Mr. LENTZ. We have not seen failures in the ETCS, and we have—this isn't the first time ETCS has been looked at. It is the first time that we have gone to Exponent to look at it. And when we put in our quality North America advisory board, they will have total independent control of another study of their choosing, and that's going to take place—that committee is going to be in place by the end of March. So there is going to be another study soon right after this.

Mr. MARKEY. And is the same thing true for the problem with the electronic throttle control system in your vehicles? Do you know what's wrong there?

Mr. LENTZ. That's what I'm talking about. The electronic—the ETC is the electronic control system.

Mr. MARKEY. You don't know what's wrong there either?

Mr. LENTZ. Again, we have not seen failures. It has been looked at in Japan in the past.

Mr. MARKEY. If there is no possible problem with your electronic throttle control systems, why do you need to find a way to override the electronic throttle? If there is no problem, why do you have to find a way to override?

Mr. LENTZ. I think you always have to keep your eyes and ears open in the event that there is something.

Mr. MARKEY. But you can't have it both ways. You can't say there is no problem but you are trying to find a way to override something that is not a problem. It leaves people with the impression that there must be a problem.

Mr. LENTZ. That's why you have to continually test and test and test in the event that something develops. It could be a change in EMI. It could be a number of different things that we have to continually test and verify.

Mr. MARKEY. I appreciate that. But I just wish that there was a little bit more humility here with regard to what you don't know, that you just say you don't know. And then the public, as they're driving around, carries that kind of cautionary warning with them as they're driving, pending the completion of all of your studies. Thank you, Mr. Chairman, very much.

Mr. STUPAK. Thank you, Mr. Markey. Next for questions go to Ms. DeGette.

Ms. DEGETTE. Thank you, Mr. Chairman. Mr. Lentz, I don't know if you saw our opening statements or the previous panel's testimony, but I probably hold the record among the committee members because I have three Camrys. So I am very, very concerned that we get this right, just like you are for your family.

Mr. LENTZ. Thank you.

Ms. DEGETTE. I want to ask you a couple of questions. The first one is, you just told Mr. Markey that this is not the first time that you folks have looked at the ETCS, and you folks provided a number of documents in response to our February 2, 2010, request. As far as you know, has Toyota provided all of the documents relating to previous tests of the ETCS?

Mr. LENTZ. Again, I can't you if it's a test or it's just the development cycle of the ETCS.

Ms. DEGETTE. I mean, we know that you have provided thousands of pages of documents relating to the development. What we want to know is, are there additional documents relating to the testing of the ETCS that you just testified that you folks—that it's not the first time that you have looked at it. And I want to know, are have we received all of the documents relating to previous testing of the ETCS? Because that's what we care about here.

Mr. LENTZ. I understand. I have to check. I don't know specifically.

Ms. DEGETTE. If there are additional documents, will you provide us those to this committee?

Mr. LENTZ. Of course. Of course.

Ms. DEGETTE. Thank you. Now the only document that Toyota has produced to us that we've seen that claims to address the phenomenon of sudden unintended acceleration is this February 2010 report that we've been talking about that was conducted by Exponent. My first question is, that report was commissioned in December of 2009 just 2 months ago by Toyota's defense attorney Bowman & Brooke, correct?

Mr. LENTZ. Yes, I believe so.

Ms. DEGETTE. And how much money was paid—I know Mr. Buyer would want to know the answer to this question. How much money was paid to Exponent to produce that report for your defense attorneys?

Mr. LENTZ. I don't know. Do you guys know?

Ms. DEGETTE. Would you mind supplementing your response with that information? Was it over $1,800 as far as you know?

Mr. LENTZ. I am sure it probably was.

Ms. DEGETTE. I am sure it is too.

Mr. LENTZ. And my understanding is, we have given them an unlimited budget to test as much as they can to find out about that.

Ms. DEGETTE. Unlimited. And I am glad that you have. But just as you wouldn't question the efficacy of what the previous witness testified to because he was paid a few thousand dollars, you wouldn't think that that would taint the scientific results of your experts either, would you?

Mr. LENTZ. Well, and that's why we have an advisory board——

Ms. DEGETTE. Yes or no is a good answer for me.

Mr. LENTZ. I can understand why you would feel that way, but——

Ms. DEGETTE. No. But you don't think that your people would be tainted any more than the last witnesses were by being paid some kind of a money, correct?

Mr. LENTZ. No, no.

Ms. DEGETTE. Thank you.

Mr. BUYER. I would.

Ms. DEGETTE. Let me ask you this: The Exponent report was considered to be an interim report, correct? So they're still conducting tests, is that right?

Mr. LENTZ. Correct.

Ms. DEGETTE. Will you provide the committee with the final test results when they are obtained?

Mr. LENTZ. Yes. We are going to make that public.

Ms. DEGETTE. And when do you expect that to happen?

Mr. LENTZ. I don't know.

Ms. DEGETTE. Now, it's my understanding that Toyota's counsel, Mr. Hester, who is sitting right behind you, told committee staff today that Toyota had, in fact, replicated Dr. Gilbert's tests and that Toyota was able to produce the same conditions without triggering an error code, is that correct?

Mr. LENTZ. Yes. Exponent——

Ms. DEGETTE. And did Exponent do that test?

Mr. LENTZ. Exponent did that test.

Ms. DEGETTE. And when did Exponent do that test?

Mr. LENTZ. In the wee hours of the night last night.

Ms. DEGETTE. Last night. So this is new information for us.

Mr. LENTZ. Yes.

Ms. DEGETTE. And I am assuming Toyota will be willing to share the results of that testing also with this committee.

Mr. LENTZ. Yes, we will.

Ms. DEGETTE. Now in your opening statement, you have said that Toyota had done extensive testing in electronics and has found no issues. Do you wish to change or clarify this remark in light of the findings disclosed to the committee today?

Mr. LENTZ. Again, I am relying on the representation from our engineering side in Japan that they have told me that they have done extensive testing. I have not physically seen it myself. I have

not seen test results. I am relying on their information to me that they have tested it extensively.

Ms. DEGETTE. OK. In light of these new revelations revealed by your attorney, Mr. Hester, that Exponent was able to replicate the same conditions as Dr. Gilbert last night, does that change your testimony today?

Mr. LENTZ. I'm not sure I understand.

Ms. DEGETTE. OK. Late last night, according to your testimony——

Mr. LENTZ. Oh, OK. Now I understand. We will provide that. I will tell you—again, I don't know exactly how Mr. Gilbert has done this.

Ms. DEGETTE. Are you disagreeing with Exponent who apparently was able to replicate the same tests?

Mr. LENTZ. No. What I am saying is I am not sure if what Mr. Gilbert has done is necessarily something that's real-world that can happen. And I can also tell you that Exponent was also able to do this on a competitive vehicle with the same result. So this is not necessarily something unique to Toyota. It may be unique to his test paradigm.

Ms. DEGETTE. OK. Now I just have one last question for you. I would assume in light of the questions raised by Dr. Gilbert's testimony today as well as the witnesses Mr. and Mrs. Smith and we have a lot more anecdotal information—I have got this couple in Colorado that I have been talking about and on and on and on—I am going to assume that Toyota is going to take this seriously, that they're not going to deny that these acceleration issues could be happening because of the ETCS and that they're going to expeditiously investigate this and are going to provide the results to this committee. Would that be a fair statement of your intentions?

Mr. LENTZ. Yes.

Ms. DEGETTE. I look forward to hearing from you. Thank you.

Mr. LENTZ. Thank you.

Mr. STUPAK. Thank you, Ms. DeGette. Mr. Doyle for questions, please.

Mr. DOYLE. Thank you. And Mr. Lentz, thank you for all the questions that you've answered. So you heard the testimony of the first panel, and Dr. Gilbert sounds like a pretty reasonable guy. And you just found that your testing company Exponent was able to duplicate what he did. Doesn't make a whole lot of sense—and I think that Joe Barton said the same thing—that you guys talk to Dr. Gilbert when the hearing is over, probably offer him a little more than $1,800 and ask him to come down to Toyota or with Exponent and the three of you sit together and see if there is something—what's the downside to testing this gentleman's theory here?

Mr. LENTZ. There is no downside. That is why I don't want to downplay what he has done. Again, I am not sure about his testing paradigm, but we welcome anyone that can find any issues with our electronics. I mean, if there is a problem, we want to find it, and we want to fix it. So yes, there is no problem with him getting together with Exponent.

Mr. DOYLE. It is in your best interest to find—I mean, no one has more to lose than you and your employees and your dealers to not

fix this problem. I mean, you should have every incentive—and I believe you do want to fix the problem. Your company has a very good reputation and it's been put into question. You know, perception is reality. We know that in our business. If the public thinks that your car isn't safe, you need to go out of your way to prove that it is.

Mr. LENTZ. Yes, sir.

Mr. DOYLE. So I just think that before you leave Washington, you ought to get this guy's phone number, and he should be sitting down with your people and you ought to test his paradigm and see whether it has any merit.

Mr. LENTZ. And what's important is, when I was at Exponent, I drove a vehicle as they did the test to short-circuit the accelerator pedal. So I had the sense and the feel of what happens when it gets into limp mode, how they can measure based on the scan device what happened. And that's why I just have to really understand as has Exponent what Mr. Gilbert did because my understanding is, we were splicing wires together.

Mr. DOYLE. Well, if I were you, I would want to know what he did too. There is no good outcome from you not trying to get this problem fixed. It's not good for America. It's not good for all the people that work for your company here in this country and all the people that drive your cars for you not to go the extra mile and test any theory that seems to have any merit to it.

Mr. LENTZ. I agree 100 percent. And that's also why going forward anytime we have a reported incident of UA, we're going to send a swat team out there—the goal is within 24 hours—so we can learn as much as we can. That's also why it would be helpful if we could get full vin numbers from NHTSA. Because sometimes they get a complaint that we don't ever receive. And the current thing—unless an investigation is opened up, we can't get that information. It would be very helpful to the entire industry, not just for us.

Mr. DOYLE. OK. Mr. Chairman, in the interest of time, I am going to yield back.

Mr. STUPAK. Thank you Mr. Doyle. Mrs. Christensen for questions.

Mrs. CHRISTENSEN. Thank you, Mr. Chairman. I want to take this opportunity to welcome the dealers and the workers in the audience. I didn't realize they were here when I made my opening statement. But I did say at the time that we wanted Toyota to fix this quickly, not only for the customers but for the workers and the families that depend on them having a job.

Mr. LENTZ. Yes.

Mrs. CHRISTENSEN. Mr. Lentz, how long have you been in your position?

Mr. LENTZ. Since July of 2006. As an EVP then president and then president COO but basically the same responsibility.

Mrs. CHRISTENSEN. I read an article—I don't remember what paper—about a week and a half ago, maybe, that was really talking about the history that Toyota has in not responding to complaints. But it started out by saying that in the late 80s, Toyota would actually go to a customer's home and—say your car has a problem, they would pick it up and they would take it and fix it.

By the late '90s, and beyond that, Toyota started maybe fixing problems that they found in future cars and not even telling the other customers about the problems and then we have the failures that have brought us here today. So that's a total culture shift over that period of time. Can you tell us what happened? I mean, what happened to the Toyota of the '80s to bring us to the Toyota of 2010?

Mr. LENTZ. One comment before that is, there are dealers that still make house calls. My father who lives in Colorado, his salesman lives about 3 or 4 miles away and every time he needs service, the salesperson drops his demo off, picks up my dad's car and takes it in for service. So that does still happen. We're not totally out of the '80s yet. But I think what happened—I think we lost sight of the customer. I think we—I don't think it was a goal for us to grow faster but we did. We had a lot of customers who loved our product. Our loyalty rates were growing higher and higher, and our volume grew. The complexity of the product line grew from the number of models to the number of engines to the number of transmissions to everything else that goes with it.

And I think we outgrew our engineering resource, and I think when that happens—and we have strategies to deal with that, but the strategies didn't work. And I think as a result of that, we're suffering from that today. And I think the most important thing is, we lost sight of our customers. And I'll give you an example even in the floor mat issue.

In the very beginning, back in 2007, we recalled vehicles because of the all-weather mat. The mat was too thick, and there was risk it would bind up underneath the accelerator pedal. And it would happen if the mat wasn't properly put down. So from an engineering standpoint is if the mat's properly in place, it's no big problem, but we didn't understand a simple thing like how customers use a floor mat because in climates like this, people double-stack mats. They put their rubber mat on top of their carpet mat, not just in our cars but in others. We didn't understand something as simple as that.

Mrs. CHRISTENSEN. And just to get one other question. I am really disturbed by what sounded like a real snap diagnosis—I'm a physician—in the case of the mats. When we're presented with a problem, we can almost diagnose it by listening to the history but we always look at every other possible cause before we really make a diagnosis and we start to treat. And you know that doesn't sound like it happened here. In your business and in my profession, lives depend on the decisions that we make, and it's really important to really examine all of the possible things, do a rule-out for every other possibility. Can you assure me—I hear you saying that it's not this electronic thing. Can you assure us today that not only with this but with every complaint, that you're going to do a complete diagnostic check?

Mr. LENTZ. Yes. I can tell you that the company's processes from top to bottom are being evaluated and it's starting with the president of the company who is going to speak to one of the committees. He is responsible for a global quality committee. It's a brand-new committee that's going to look at just at quality and safety. And there are representatives from each of the large regions

around the world that are on that. There is an independent advisory board that will report to that, to look over his shoulder.

Mrs. CHRISTENSEN. What was the independent advisory board? We talk about people paying and stuff. How do you get this independent?

Mr. LENTZ. You go out and hire safety and quality experts from outside of the company to oversee what's happening, to make sure that we're doing the right thing, and that's the North American region of that, and these committees are going to be announced by the end of March. They are going to be responsible for an independent, totally independent safety testing of the throttle control system.

Mrs. CHRISTENSEN. My time is up. Thank you, Mr. Chairman.

Mr. STUPAK. Thank you. Ms. Sutton for questions, please.

Ms. SUTTON. Thank you, Mr. Chairman. Mr. Lentz, I would like a little bit of clarification on some of the points that have been raised here today during your testimony. A few moments ago in response to one of the questions you were talking about that we welcome anyone who can find a problem so we can fix it, something to that effect. Is that accurate?

Mr. LENTZ. Yes.

Ms. SUTTON. When you say "we," who do you mean? We welcome?

Mr. LENTZ. Toyota.

Ms. SUTTON. Toyota International?

Mr. LENTZ. Yes. Again, TMS USA is a distributor for Toyota in the United States. My group does not design or engineer products.

Ms. SUTTON. And I would like to talk about that a little bit.

Mr. LENTZ. Sure.

Ms. SUTTON. Because you are the president of Toyota Motor Sales in the U.S., as was pointed out by Ranking Member Barton. Does Toyota Motor Sales make safety determinations? Does your department make safety determinations?

Mr. LENTZ. No. What we do is we get feedback from a number of different sources. We get feedback from customers that call in or contact us online. We look through the Internet. We look at NHTSA data. We look at a number of different sources. We get reports from our dealers. We have product reports, all of that information from my side gets put together in reports and they go to Japan to the quality side. So to say that I'm not involved in quality, I am from an antenna standpoint.

Ms. SUTTON. OK. But you also said during your testimony that the communication was pretty one-way with respect to safety and reporting back to Japan because you have testified here today in relation to Mr. Markey's questions about the alarms that were going off in other parts of the world, and we just sort of had—we have a plea of ignorance that we didn't know here, and it might have made a difference in some of the accidents that could have been avoided. So I am a little bit perplexed by the idea. Does Washington staff, safety staff that deals with NHTSA report to you as the head of sales?

Mr. LENTZ. No. No.

Ms. SUTTON. OK. Who does that safety staff that reports to NHTSA report to within your company?

Mr. LENTZ. It reports to TMA Washington, D.C., office.

Ms. SUTTON. OK.

Mr. LENTZ. So there is—Mr. Inaba, who is testifying tomorrow is the chairman of Toyota Motor Sales USA, but he is the president of TMA. So that reports in through him, New York and Washington, D.C.

Ms. SUTTON. So he is the person who is responsible for safety decisions in the USA?

Mr. LENTZ. No.

Ms. SUTTON. It's still in Japan?

Mr. LENTZ. Still in Japan.

Ms. SUTTON. Why would Toyota send the head of sales to discuss safety issues here today?

Mr. LENTZ. I was invited to attend.

Ms. SUTTON. OK. All right. So it was a decision made by the committee, is that what you're—you were invited by who to attend?

Mr. LENTZ. By this committee.

Ms. SUTTON. By the committee. OK. Let me ask you this, because you said in your testimony—"In recent months we've not lived up to the high standards our customers and the public have come to expect from Toyota." And we're all concerned about that, and there are two groups of people who I think that we've all expressed concern for. Most obviously the consumers out there who put their trust and faith and families in those Toyota vehicles.

Mr. LENTZ. Yes. Yes.

Ms. SUTTON. And of course, the workers, the workers who rely on Toyota to make a living and take care of their families. I guess that's why I asked you the question about the "we" because we've also heard a lot of confusing testimony about the electronic throttle control system. Six years ago, NHTSA compiled data showing that Toyota Camrys with electronic throttle controls had over 400 percent more vehicle speed complaints than those with manual controls. So it's rather difficult to—do you think that that's an acceptable sort of number to suggest that there isn't something to it? I mean, it's 400 percent more.

Mr. LENTZ. There is no question it's a big number. But I think, again, we have to understand what those complaints are surrounding. I don't know if all of those are sudden acceleration incidences.

Ms. SUTTON. Right. Well, why don't we know all of that? 400 percent. We might not know everything but when you say, "I don't know if all are," that's a big statement too. We must know more than that statement reflects.

Mr. LENTZ. Well, I can't tell you—again, if you are speaking off of the NHTSA database, unless those are investigated, I can't tell you just from the database exactly what's going on. And that's why it's important that we are able to get that information. And quite frankly, I would love to be able to get confidentiality agreements with insurance companies as well where they can supply us with that kind of information so we can see what's happening.

Ms. SUTTON. Well, Mr. Lentz, the American people and the American market has been very, very good to Toyota. A lot of money has been made by the company in decades past. And so when we read, "I'd like to assure the committee and the American

people that nothing matters more to Toyota than the safety and reliability of the vehicles our customers drive. We are committed not only to fixing vehicles on the road and ensuring they are safe but to making our new vehicles better," and your testimony continues.

When we read that and then we hear the testimony about the safety decisions being made in Japan in a vacuum, isolating those who are selling these cars to our constituents and their families and who are having the workers and the dealers sell these cars, you know, it begs the question about why people would be concerned of where the facts match up with the testimony. And I yield back.

Mr. LENTZ. I understand. That's why the process is changing where there is going to be a person from the United States that sits on the defect committee in Japan to be able to make those decisions, and if they don't agree with that decision, there is going to be a possibility for us to then appeal that decision. And it's not just in the United States but from around the globe, we'll be on that.

Ms. SUTTON. OK, Mr. Lentz. But I have to tell you, it comes very late. We appreciate that things get fixed and that is the goal that things get fixed and no more, you know, loss of life is suffered. But again, one has to ask, would it have happened but for some of the mistakes coming to light? And I am glad for the change. I hope it's enough. I yield back.

Mr. LENTZ. Thank you.

Mr. STUPAK. Thank you, Ms. Sutton. Ms. Schakowsky for questions, please.

Ms. SCHAKOWSKY. Mr. Lentz, are you asking us to believe that no one at Toyota USA knew about recalls in Canada? I mean, it's just strains credulity to——

Mr. LENTZ. Again, specifically on the 2003 Celica, I don't know the specifics on that. I don't know if that was a vehicle that was recalled here as well. I don't know the specifics if that, again, was a certain floor mat issue that was unique to Canada. I just don't know details about that particular recall.

Ms. SCHAKOWSKY. Except that you gave before as a reason that these things are not shared. And it's just really hard to imagine that whether it was deliberately shared or not that given the fact that many Americans can see Canada from their house, that we did not know about the——

Mr. LENTZ. Again, I can't speak specifically to that exact incidence. I don't know the details of what it was recalled for.

Ms. SCHAKOWSKY. In 2008, a woman named Guadalupe Alberto was killed when her 2005 Camry suddenly accelerated, jumped a curb and struck a tree. Her car didn't even have floor mats at the time. So why wasn't this incident further investigated then? It says—I mean, we know as recently as November—or you say in November of 2009, Toyota—or at least up until then—was still claiming that floor mats were the only problem.

Mr. LENTZ. Again, I don't know the specifics of that particular accident. I can look into it for you.

Ms. SCHAKOWSKY. That would be fine.

Mr. LENTZ. But the floor mat issue came around earlier than that. The issue in November was really as we got into this issue of the sticky pedal that we learned about.

Ms. SCHAKOWSKY. Right. But here was a 2008 accident, and she didn't have a floor mat. But anyway, you know, we're all in the customer service business ourselves. We have constituent service, personnel in our offices. We take it very, very seriously. I heard you say that you apologized to customers for the problems with Toyotas. Did you apologize to customers who were treated like they were crazy when they made these complaints? Did you apologize to the Smiths?

Mr. LENTZ. I have not spoken to the Smiths, but I am going to. Again, it was embarrassing to hear what happened to them. I don't know the specifics of the situation, but it's—just to hear that, especially on the Lexus side of the business, that's a very unusual way for business to be done.

Ms. SCHAKOWSKY. It's a very unusual way. Let me quote to you from a letter that was sent to a customer. A 2005 Toyota Tacoma driver told your company that his truck accelerated by itself despite stepping on the brakes, slammed into four parked cars. Here was the answer: The throttle was inspected and moved freely without any binding and was found to operate as designed. The brakes will always override the accelerator, which may not have been true at the time. You said you are making that change, but anyway, in order for this accident to have happened as reported, two totally separate systems, the brakes and the throttle, would have to fail at exactly the same time. This is virtually impossible. And that phrase, that sentence, "This is virtually impossible" seems to have been repeated over and over to your customers. You are in charge of sales. Is this any way to deal with customers, just to tell them—absolutely impossible?

Mr. LENTZ. No, it's not. And I have talked to our group that I am going to be involved in every event of unintended acceleration so that I know what happens. So you know, just overall customer complaints that come in, I get probably 20 or 25 complaints a week. Each and every one of those complaints I have to receive a buck slip back to know exactly what the issue was, what the solution was and whether the customer is satisfied or not.

Ms. SCHAKOWSKY. You also review—I review letters that go out to my constituents. Do you review—does someone in authority review letters that are sent out so that the credibility of the customer is not only questioned but just negated?

Mr. LENTZ. I personally do not. I will find out. What—is that a recent letter?

Ms. SCHAKOWSKY. Well, I am looking at three answers that use the same phrase about "virtually impossible." So I don't know the date.

Mr. LENTZ. OK.

Ms. SCHAKOWSKY. I am sure our staff has those and they can check the date on the letters. My time is up, but I hope you will also make sure that recalls that happen in other places become part of the calculation of how you respond. Thank you.

Mr. LENTZ. Thank you.

Mr. STUPAK. Mr. Braley for questions.

Mr. BRALEY. Mr. Lentz, I want to begin by commending you for sharing your personal story of loss with the committee here today. That takes great courage. I would encourage you to share the story

with the decision makers in Japan who are making the key decisions on product defects, product recalls, product retrofits and failure analysis because I think they need to hear that story from you.

Mr. LENTZ. Thank you.

Mr. BRALEY. I also want to commend you for commending the dealers in this country who have done an extraordinary job responding to your recalls and performing retrofits and tying up their staff all over this country. Some of them are my friends and my constituents. So I appreciate your recognition of the sacrifice they're making. I want to focus specifically on the comment that you made on page 2 of your statement which you repeated here today where you said, We are confident that no problems exist with the electronic throttle control system in our vehicles. We have done extensive testing of the system and have never found a malfunction that caused unintended acceleration. I am having a hard time squaring that with Toyota's 2002 technical service bulletin which noted that if customers complained of surging accelerators reprogramming their engine, which you mentioned earlier, was a way to fix that problem and that, sir, sounds like an electronic problem to me.

Mr. LENTZ. I don't know that for certain because I can't tell you if it's a software issue, if it's a transmission issue. There are a number of different reasons for surges. It could be a high idle up that takes place sometimes when air conditioning kicks on, as an example.

Mr. BRALEY. But reprogramming the computer would not be a mechanical fix, would it?

Mr. LENTZ. No.

Mr. BRALEY. And the other reality of that notice is that these 2002 to 2006 Camrys which were the subject of that technical service bulletin, you are not addressing the problem of the brake override retrofit with those models, are you?

Mr. LENTZ. Camry, I would have to look and see what year it goes back to, but we are going back in the case of Camry.

Mr. BRALEY. All right. Now, one of the things you also mentioned in your statement was that in December you asked Exponent, a world-class engineering scientific and consulting firm, to conduct a comprehensive independent analysis of your electronic throttle control system with an unlimited budget. So let's talk just a little bit about that. Your counsel who is with you today is with a very well known firm that defends not just Toyota, but other auto manufacturers in product liability and crash-worthiness cases all over the country. You agree with that, correct?

Mr. LENTZ. Yes.

Mr. BRALEY. And I am in no way impugning them for their role, but I find it very odd that when you were presented with this challenge of getting to the root of this problem, you went to your defense firm to go make the contact to arrange for this independent testing.

Mr. LENTZ. Again, our legal staff put together the request. I can tell you that that report in its entirety is going to be made public.

Mr. BRALEY. And we look forward to it, sir.

Mr. LENTZ. So if there are issues in it, it's going to come out.

Mr. BRALEY. Let's talk about the company you retain, Exponent. Because they are a successor corporation to a company called Failure Analysis Associates, which has done extensive work for not just Toyota but all of the big auto manufacturers and the motorcycle manufacturers on not only failure analysis, but also providing expert witness testimony. You are familiar with that?

Mr. LENTZ. I'm not sure about the expert witness, but I know they have worked for other automotives in things like vehicle stability control and other things that have been developed that have been great for the industry.

Mr. BRALEY. Sure. And one of the things that I can tell you is that I have a copy of a deposition that their chief technical officer, Roger McCarthy, provided in 1998. And in that deposition, he testified that Failure Analysis Associate, then known as Accenture, received between $30 million and $40 million a year for the work they did for the auto industry. Were you aware of that?

Mr. LENTZ. No.

Mr. BRALEY. Isn't it true that Toyota has paid them over $1 million in the past for the work that they've done?

Mr. LENTZ. Exponent?

Mr. BRALEY. Yes.

Mr. LENTZ. I do not know.

Mr. BRALEY. But would you be willing to provide us with documentation of what Toyota has paid to Accenture not just in relation with this study that's being done or in relationship with Mr. Gilbert's follow-up analysis, but over the period of time that these recalls that are being considered or have been issued have been performed, can you do that?

Mr. LENTZ. I am sorry, could you repeat the question?

Mr. BRALEY. Mr. Chairman, I would make a formal request that we get as much information as we can from Toyota International, Toyota North America, documenting the financial relationship between their company and Accenture or its predecessor, Failure Analysis Associates, not just in relationship with the study that was done that has been the subject of this testing?

Mr. LENTZ. That is fine. We will do that.

Mr. BRALEY. Now, one of the things you talked about was the fact that you were present during some testing that was done at Accenture.

Mr. LENTZ. Exponent.

Mr. BRALEY. Exponent, yes. Is that something that you were part of when there was filming that was done to document the testing?

Mr. LENTZ. No. No. I just wanted to go see how they test. I have never been in a vehicle that has gone into fail-safe mode, so I wanted to understand what it feels like from the consumer's standpoint, what fail-safe feels like as you are driving down the road.

Mr. BRALEY. Were you involved in any way in the analysis in terms of defining the scope of that project or how the results would be submitted?

Mr. LENTZ. No. The only portion I was involved in was that when that research becomes available in its entirety, it would be made public. It would be made available to Congress and then NHTSA.

Mr. BRALEY. Did Toyota make a direct relationship for the performance of those services with Exponent, or was that something handled by Bowman and Brooke?

Mr. LENTZ. I don't know.

Mr. BRALEY. Because when you indicate in your statement that you requested them to do a comprehensive, independent analysis with an unlimited budget. I am just wondering whether there are documents that would define the scope of that request and the terms under which Exponent would be compensated for what they were performing. Are you aware of that?

Mr. LENTZ. I am not aware of it, but I am sure it must exist.

Mr. BRALEY. Then I would also request that, Mr. Chairman, and I would yield back.

Mr. STUPAK. That concludes questions by members of the subcommittee. We will now go to questions by members of the full committee.

Mr. Buyer.

Mr. BUYER. Yes. As far as I know, Accenture has not been hired by you to do any engineering or testing, have they?

Mr. LENTZ. Exponent.

Mr. BUYER. Right. Accenture is like an accounting financial firm, right?

Mr. LENTZ. Yes. Right.

Mr. BUYER. You are being asked questions from a Democratic colleague about Accenture and I just want to make sure for the record it is clear.

With regard to the firm that you hired, Exponent, as far as I am aware, even the United States Government turned to this firm to help us come to the solutions as to why we lost the shuttle Columbia, is that correct?

Mr. LENTZ. Yes.

Mr. BUYER. So this is not a fly-by-night firm. This is someone who is one of the best in the United States when it comes to problem-solving.

Mr. LENTZ. Yes. We wanted to find the best. Again, there will be another review of the CTCS done by this independent study group. They may choose to go with them. They may choose someone else.

Mr. BUYER. Now with regard to some testimony that you—I wrote this down because it was bothersome to me. You said that with regard to testing that was done last night with regard to the methodology used by Dr. Gilbert on the first panel, you said "it is not a real world scenario."

So, can you explain that a little bit further? In other words, he did testify that he used manipulation. He told me that he did not cut three wires. But when you say that there was a methodology that is not a real world scenario, help me understand.

Mr. LENTZ. Well, I think he said tapped in, which is how he gets into the harness. Our understanding is, and again, this happened just 12 hours ago, so I don't want to attack him without knowing exactly what his process was, but my understanding is he took the plug off the back of the accelerator pedal. There are six wires on the back of that; two that go to the sensor, two that go to the power, and two that go to the ground. And he tapped into the two

that go to the sensor, and basically through some device tied those two together and then tied one of the power wires into another one.

So, again, it just doesn't seem as if that is something that may necessarily happen in the real world. And Exponent has tested what happens if you lose ground, what happens if the sensors break down, but in a very different way. So I would just like to understand his methodology and make sure that it is not the testing paradigm that is causing this.

Mr. BUYER. So when ABC showed this, in order to have these results, your testimony would be that Dr. Gilbert had to induce fault by manipulation to create and generate an artificial voltage for the result for which he was seeking?

Mr. LENTZ. Yes, and go around the sensor.

Mr. BUYER. So that normally isn't going to happen as I am driving one of your products down the road, would that be correct?

Mr. LENTZ. I believe so. Again, I am not an engineer. That is what I need to study through Exponent, because they did the same study.

Mr. BUYER. All right. Earlier I made the comment about I think the American public, we have seen what happens when NBC Dateline staged a staged crash between two trucks to claim that General Motors' fuel tank design caused fire on a crash test on television, and we were all pretty upset about it. So now what we have is a repeat scenario with regard to ABC, also using a manipulation, not using a real world scenario. So that type of thing can be left to the credibility of the viewer and the American public.

Now I am going to shift. The reason I am going to shift is let's go back to Columbia. When there is a crash in America and we have a concern, we go to the product. So Exponent looks at Columbia and tries to gather as much information as they possibly can. Data and what is left.

Mr. LENTZ. Right.

Mr. BUYER. When there is an airline that crashes, NTSB will go in and try to recreate and rebuild that aircraft.

When I look at what Exponent is doing and I look at the report and I look at the thousands of vehicles that they are looking at, what bothers me is why wouldn't you, when an automobile that has been identified as this sudden unintended acceleration, why isn't that product pulled aside and ripped apart so you can understand what is exactly going on? Those are the thousand ones that if I were in your seat that I would be going after and applying the greatest minds of the world to understand.

Mr. LENTZ. Yes. In many cases one of the field technical specialists or one of the quality specialists, they do go out. And if there is a component failure, they would take that component off and send it to the quality side to see what is going on. But in the case of the electronic throttle, if they don't get a code reading out that shows the failure and they can't recreate it, it is very, very difficult to be able to do that.

Now, they may take the throttle body off if it is cracked or if it is somehow defective. They will take a pedal off if it is defective. If an ECU is defective, they will take that off. But in many cases, that is what is so frustrating about unintended acceleration. It is

very, very difficult to duplicate, and unless they can duplicate it they have no way of knowing exactly what has taken place.

Mr. BUYER. Thank you, Mr. Chairman.

Mr. STUPAK. Mr. Gonzalez for questions.

Mr. GONZALEZ. Thank you very much, Mr. Chairman.

Mr. Lentz, in my limited view of things, I always think in terms of how is the consumer protected, how is the best interest promoted. I have concluded that, one, it is the manufacturer's own moral behavior first and foremost. Then we go into the governmental regulatory oversight. And then we have our civil justice system. I am a great believer in the civil justice system. The problem is that is always after the fact, way after the fact.

So I am looking at the manufacturer's moral behavior and I am looking at the capabilities, proficiency and competency of the regulatory scheme that Congress has in place.

When any of this breaks down, Congress will move forward. And you heard Mr. Waxman say, look, we may need legislation, and that is a process that we are engaging in at this time. It is going to get hot and heavy and you are going to see all the different interests.

Last week I was on the radio, and when I simply said let us not rush to judgment, that goes to whether it is Toyota, whether it is GM or Ford. I don't care who it is, an individual or a corporation. The interviewer then said, are you apologizing for Toyota? So we have that issue.

Now, we have members of Congress who may be a little aggressive in fulfilling their duties. You have letters going out that are saying it does sometimes appear, however, that the negative news is being encouraged by plaintiffs' trial lawyers, union activists and those interested in cutting into Toyota's market share.

That is the environment. It is not healthy. It is not good. And all these reasons which are totally wrong and ridiculous are being attributed to those individuals simply trying to do their jobs as Members of Congress. So I am hoping that this process will be fair.

But in the meantime, if there is a rush to judgment, this is the danger, not just to Toyota, but to everybody that will be similarly situated sometime in their lives, whether it is an individual, a company or a corporation, is that months from now we may discover that it wasn't electronic, and that all of the action taken was timely and diligent. But it really won't matter.

We have an old saying, and I said this the other day, everyone will remember the accusation; no one will remember the exoneration. And for a business in the United States, people are making decisions today on what car they are going to buy. By the time we figure out what the truth may be, that decision has been made. And I am going to tell you that I believe what is going on today will affect that decision. That is why we all have to be so careful in how we do this and that we are fair to all parties, whether it is going to be the consumer, the Smiths, or even Toyota, but to be fair to everyone.

I want to know what you can tell Toyota owners today regarding the safety of their vehicles.

Mr. LENTZ. What I can tell them, and I am not going to go through the detail of—all of my family drive products. I would not

have my loved ones driving products, recalled or not, if I didn't feel they were safe. So that is number one.

Number two is we have processes in place, new processes in place, that are going to ensure a lot more transparency and responsibility to make sure we make faster decisions that are the right decisions.

Everybody has defects. Everybody is going to have recalls. But how quickly we react to protect that consumer, how much the consumer sees us standing behind their product, that is what is most important.

I can tell you another thing. We have a lot of dealers sitting behind me. The way we start to build trust in our brand is through our dealers, because our dealers are the true contact with the customer, and they are doing a tremendous job in taking care of these situations. I mean, almost 800,000 customers already taken care of in about 20 days is an amazing number. And you will hear from the dealers that the customers are understanding. Sure, there are one or two customers in each dealership that are pretty upset at what is going on. But for the most part, our loyal customers, they know for the last 50 years that we have stood behind our product, we have done the right thing for them.

Mr. GONZALEZ. Let me ask this, because I think you touched on it. I have 35 seconds. But quickly, you drive Toyotas, your family drives Toyotas, everybody you care about drives Toyotas. Are you going to quit driving Toyotas?

Mr. LENTZ. No, sir.

Mr. GONZALEZ. You heard that Members of Congress on this committee drive Toyotas. I am not going to ask them whether they are going to quit driving their Toyotas. My suspicion is that they will not. So I think maybe that is the message that comes from his hearing today. We are going to be aggressive, we are going to be vigilant, diligent, we are going to get to the bottom of this. The question is to what degree can we protect the American consumer, and I believe that we are going to measure up to that duty and responsibility that we owe them.

I just again thank you for your testimony.

Mr. LENTZ. Thank you. It starts with us.

Mr. GONZALEZ. I yield back, Mr. Chairman.

Mr. STUPAK. Thank you, Mr. Gonzalez.

Mr. McNerney has joined us, a member of the full committee. Questions, please, 5 minutes.

Mr. MCNERNEY. Thank you. I appreciate you allowing me to address the hearing. Mr. Lentz, thank you for appearing today and taking some tough questions.

Addressing the safety issues we are discussing today is vitally important, but I would like to focus my questions on a related matter that I believe reflects on Toyota's disregard for its loyal customers and its loyal employees. I am referring to the decision recently to shut down operations at NUMMI plant in Fremont, California, which will cost us about 35,000 jobs in the State of California, and I don't believe that Toyota has done nearly enough to prevent this loss of jobs.

I have an opening statement that I would like to include in the record, Mr. Chairman.

Mr. STUPAK. Without objection.

[The prepared statement of Mr. McNerney follows:]

Opening Statement:

Mr. Chairman, thank you for allowing me to submit my comments for the record. I would also like to thank Mr. James Lentz, President and Chief Operating Officer of Toyota Motor Sales, U.S.A., Inc., for appearing today, as well as the other witnesses for their presence. Today's hearing addresses Toyota safety failures, an issue of national concern. I am grateful for the opportunity to be here, and I would like to focus my remarks on a related issue.

I believe that closing the New United Motor Manufacturing, Inc (NUMMI) would be a mistake for Toyota and would be harmful for thousands of California families. I urge Toyota in the strongest terms to reconsider this decision because I am convinced that keeping NUMMI open would benefit the public and the company. As I recently wrote in a letter to Toyota's President, Mr. Akio Toyoda, Toyota can hardly afford the public opinion backlash that will result if the company is seen as abandoning thousands of loyal employees during this difficult economic time. The announced closure of NUMMI would result in the layoff of nearly 5,000 workers at the facility and as many as 35,000 people in California. This closure would have a devastating impact on NUMMI employees and supporting businesses throughout the state.

I am pleased to have the opportunity to question Mr. Lentz about Toyota's efforts to maintain operations at NUMMI. General Motors announced that it would end its participation in NUMMI last summer, and it is my understanding that Toyota made the decision to discontinue manufacturing operations at NUMMI in August, only a short time later. I have serious doubts as to whether Toyota, during that brief period, made an earnest and complete effort to explore possibilities that would keep NUMMI open. I have written to Toyota, both personally and in conjunction with Congressional colleagues, to urge the company to reverse its poor decision. Unfortunately I have not yet received complete or satisfying answers to the concerns I have raised.

Private corporations have the right to make independent decisions about their own business operations. However, I do not believe that closing NUMMI in the current economic climate would benefit Toyota's future profitability. Toyota's reputation for producing dependable cars is facing unprecedented challenges because of tragic, and fatal, safety failures that were not publicly acknowledged in a timely manner. Reversing the decision to close the NUMMI facility, thereby saving tens of thousands of jobs, would be a strong indication that Toyota is committed to rebuilding its image in California and the rest of the country. Toyota would be seen as a dependable partner with California during tough economic times.

Californians rightfully expect Toyota to continue producing cars in our area if the company continues to expect our patronage. Keeping the NUMMI plant open would send a clear message that Toyota has confidence in American workers, wishes to retain its customers' loyalty, and cares about the well-being of California families. Toyota also benefitted tremendously from the taxpayer-funded Cash for Clunkers program, and Americans are correct to insist that Toyota display a commitment to preserving and creating American jobs.

Mr. Chairman, thank you again for your leadership on the safety issues that have so many Americans concerned for their well-being. I yield the balance of my time.

Mr. MCNERNEY. Mr. Lentz, Toyota is currently experiencing major public relations problems and the public concern about safety failures is going to hurt your bottom line. California is one of your biggest markets and it is obvious that keeping NUMMI open will help rebuild your image. Wouldn't that be beneficial to Toyota?

Mr. LENTZ. Our image is beneficial, but specifically NUMMI, I think we have to be clear that Toyota is not shutting down NUMMI. NUMMI is shutting down NUMMI. It is a separate corporation that was 50 percent owned by Toyota and owned by General Motors. And when General Motors moved into bankruptcy and the new partner became Motors Holding, Liquidation Holding, it was General Motors abandoning NUMMI that set this in play. That is the truth of the matter.

When they pulled out and they pulled out 30 percent of their volume, that plant was difficult to become commercially viable. It is a long way from our supply lines. We supply a——

Mr. MCNERNEY. It is not a long way from your customer lines. Mr. Lentz, I understand that the Pontiac Vibe was only about 20 percent of production at NUMMI in 2008, with Toyota vehicles making up the rest of that production. Surely Toyota could modify its operations to account for a 20 percent drop in production. It seems to me that you are putting NUMMI out of business because of antipathy toward West Coast workers, not out of necessity.

Unfortunately, Toyota hasn't demonstrated that it has made any meaningful effort to explore possibilities that would keep NUMMI open, and I was asking you, do you expect Californians to believe that in the brief time between GM's announcement and your decision to close, were you able to definitively determine that it was impossible to maintain operations at NUMMI?

Mr. LENTZ. Yes. It is not financially viable to do. It is a long way from our logistics lines. The volume, 20 percent is a pretty big number. I mean, California sells about 13 to 14 percent of the Nation's sales. That is a plant that has capacity for almost 400,000 vehicles that is building around 300, at the most.

You have got to remember that when this industry collapsed after Lehman, we had a 40 percent collapse from the peak of the marketplace in 2000–2001 to where we ended last year. There was tremendous overcapacity all across the United States.

And it is not something you take lightly, closing a plant. You look at the workers behind me. When that market collapsed, and we had 100,000 unassigned vehicles sitting at our ports that we didn't have dealers to be able to accept because the inventories were so high, we didn't lay these people off. We kept these people working because we know that they are a huge asset for us.

So, we don't take closing a plant or NUMMI doesn't take closing a plant lightly. We believe in our workers. They have done a tremendous job in getting us through all this.

So, NUMMI is—unfortunately, we are going to stop ordering product at the end of March. And we will do what we can to try to help the workers through transition, and hopefully, I don't know if another assembly can go in there or they can redevelop the property and create jobs through the redevelopment and whatever goes in there.

Mr. MCNERNEY. I am thinking of your benefit as well as ours. I will leave you with this parting thought. You are having a public relations nightmare right now, and it may benefit you a slight amount to close a plant like that, but you are going to face a public backlash on the West Coast. Now, on the other hand, if you work with us to keep that open, it is going to be a real plus for your public relations issues. I just ask you to keep that in mind as you move forward.

Mr. LENTZ. Just understand as well, we are going to do whatever we can to help through that transition. We are not legally obligated, but we are going to throw money into it to help through this. I just wish that our partner of 25 years would step up and do the same.

Mr. MCNERNEY. That is all.

Mr. STUPAK. Thank you, Mr. McNerney.

Let me just ask you a few questions to clarify the record a little bit, if I can. There has been a lot of testimony here and a lot of questions. Just make sure I am correct here.

The only independent analysis that you have had, when you spoke on the Today Show you said you have an independent analysis on your problems with the sudden acceleration, has been Exponent, correct?

Mr. LENTZ. Yes, to my knowledge.

Mr. STUPAK. And you were referring to that report of Exponent?

Mr. LENTZ. Yes. Now, NTSA has also done studies in the past, but I don't know how robust they are. So I don't want to——

Mr. STUPAK. But you don't have any knowledge of any independent studies they did?

Mr. LENTZ. No, not to my knowledge.

Mr. STUPAK. All right. And there has been no independent electronic throttle control system studies.

Mr. LENTZ. Not at Toyota. There may be industrywide. I don't know.

Mr. STUPAK. But after this situation.

Mr. LENTZ. Not to my knowledge.

Mr. STUPAK. With Dr. Gilbert here, he has come up with this, and apparently your—Exponent's engineer has been able to duplicate it. Is it fair to say then when they duplicated it, they got the same result as Dr. Gilbert that the fail-safe system did not receive the signal to enact. So, in other words, the fail-safe system, whether it is an override—however it happened, the diagnostic codes did not kick in to put in the fail-safe system to get that braking going.

Mr. LENTZ. Yes. I believe what he has done is designed a way to go around the override system. So whether it can happen or not——

Mr. STUPAK. Sure. We don't know the source of it, but it is a bookend, as they said, to start the research.

Mr. LENTZ. Yes.

Mr. STUPAK. And that could be a value to Toyota in trying to restore service?

Mr. LENTZ. Yes.

Mr. STUPAK. You mentioned the SWAT team you are going to have at the end of March.

Mr. LENTZ. Yes.

Mr. STUPAK. Within 24 hours they will have information and be on site. Let me ask you this. Mr. Dingell asked and a couple of questions have been about this event data recorder. The event data recorder, as you said, tells you what happens 5 seconds before an accident and 1 second after.

Specific requests have been made on the Auburn, New York, crash, which was a 2010 Camry. That ERB has been seized. Do you know where it is? Why isn't the information made available to NHTSA or anyone else? No one seems to know the result.

Mr. LENTZ. I don't know. If I can get information on that crash——

Mr. STUPAK. How about the South Lake, Texas, one. That was that 2008 Toyota Avalon Mr. Rush brought up. It happened on December 26th. The same thing. It says conducted a site visit on 1/12 where they pulled the black box out, if you will. Where are your results on that?

Mr. LENTZ. And they pulled the pedal off. I don't know. Because I know NHTSA was also down there with our engineers, but I don't know specifically what the result was.

Mr. STUPAK. Or how about Mr. Jeff Papinski. He was from Minnesota. He had a 2007 Lexus ES350 and had problems with it and requested repeatedly from Toyota to give him the information off the black box, and he has always been denied.

If we are going to have this SWAT team and we are going to be more transparent and bring forward this information, why not on these fatal crashes, especially the ones I mentioned, why not disclose what happened on that black box?

Mr. LENTZ. I think right now the issue is there is one tool in the entire United States, and I believe it is still in the prototype stages. So the final production tools we won't start seeing here until April.

Mr. STUPAK. But standards for the black box were developed in 2006 by NHTSA that everybody has to have starting in 2012 and 2013, correct?

Mr. LENTZ. Yes, it is in 2012.

Mr. STUPAK. So if we have standards in 2006, you are still trying to develop a prototype?

Mr. LENTZ. That is my understanding.

Mr. STUPAK. So information off this black box then, if I wanted to get the information, if there is no mechanism in the United States, it has to go to Japan to get the information?

Mr. LENTZ. Correct. Correct. It is a unique mechanism for our black box.

Mr. STUPAK. And this defect committee, the U.S. may have a representative on it but the decisions are still going to be made in Japan?

Mr. LENTZ. Well, the process of making a defect decision is there is a general manager of the quality group that has a committee with a number of different engineers and everyone else. That has always been in Japan with Japanese. That committee now is going to have people that will be seated on that from other parts of the regions around the world. The United States for certain. I don't know, I am assuming Europe will probably be there as well. So they will be part of—they will be tied in to all the information

available, into the decision process, and we will have the ability to appeal that if we don't believe in it.

Mr. STUPAK. You will have input, but the decision will still be made in Japan?

Mr. LENTZ. Well, the input will be made, but we will have the ability to appeal that decision that we do not have today.

Mr. STUPAK. Let me ask on the black box there, where is that data stored?

Mr. LENTZ. Pardon?

Mr. STUPAK. Where is that data stored? If I get a black box out of the South Lake, Texas, accident, where would that data be stored? Would that have to go to Japan to get downloaded?

Mr. LENTZ. No. I mean, if we have the scan tool, once these tools are available——

Mr. STUPAK. Right now, because you don't have the scan tools.

Mr. LENTZ. I don't know if Japan has tools or not. If we are in prototype stage, I am assuming that it is a global prototype stage. I don't know that for certain. But I do know in April we are slated to receive about 100 of these.

Mr. STUPAK. All right. That will be in April. OK. If you receive personally, you say you receive 20 to 25 complaints a week. Are any of them on unintended accelerations?

Mr. LENTZ. I have got to tell you, in the last 3 years, I have seen them on surges, but I don't recall any one that was on an unintended incidence.

Mr. STUPAK. Could you provide us an example of some of those surges that you personally handled?

Mr. LENTZ. Sure.

Mr. STUPAK. Mr. Burgess, did you have any questions?

Mr. BURGESS. I think it has already been addressed, but I just would like for you, Mr. Lentz, or Toyota to provide the committee your analysis or Exponent's analysis of when they do the testing, the retesting on the Gilbert thing.

I would just echo about the black box. South Lake is right outside of my district. It was a very tragic accident right after Christmas where a car went through an intersection and ended upside down in a pond and all the occupants died. There is some question as to whether or not there might have been a medical emergency involved in that. But I think the black box in addition to the other physical evidence, the brake pads and that sort of thing, will be very instructive for your group and, of course, instructive for us as well.

So, as this information on these look-backs, if you go out and get the car from Tennessee and your engineers come up with a decision on this, I actually think it would be very useful that this committee would have that information as early as possible after you get that.

Mr. LENTZ. Surely.

Mr. BURGESS. Heaven help us if there is another uncommanded acceleration. But get that car. The first thing that has to happen is somebody has to look at that car and figure out what is going on.

Mr. LENTZ. I appreciate it.

Mr. STUPAK. We are about to wrap up. I see Mr. Engel is here. Did you have a question, Mr. Engel, of this witness? You are a member of the full committee.

Mr. ENGEL. Thank you, Mr. Chairman. I think a lot of the questions have already been asked. But when I was asked by the media yesterday what question was I going to ask, I said that I would ask what did you know and when did you know it and what do you still know that we don't know.

I have listened to the hearing, and, Mr. Lentz, all I can say is that I hope you can appreciate that we are very skeptical, because it certainly seems if you just look at the chain of events that there was an attempt to kind of sweep everything under the rug. And I am still not sure that the question has been reasonably answered in terms of, you know, you talk about these six vehicles that you tested. But why would not your first inclination be to test the vehicles that accelerated?

When I heard Mrs. Smith earlier on, on the first panel, and she talked about how it just went 100 miles an hour and she couldn't do anything to stop it, wouldn't it have just been logical to take that car and others like that and just rip it apart? I know Mr. Barton asked you it earlier, but I am not sure I am satisfied with your answer.

Mr. LENTZ. Again, I don't know the specifics, but it sounded as if she said that there was a technical person that was down there and did look at the car. So I can't tell you—if they didn't see anything, that is probably why they didn't tear it apart. If they would have seen a component failure, I am sure that component failure would have come off that car and we would have received it. Again, it may have happened. I don't know. I don't know the specifics on her accident.

Mr. ENGEL. But it wasn't only her car. There were others that gave similar stories, and for how long was Toyota saying it is mats, floor mats, or rugs or sticky pedals, when it just would seem clear by her story, I am sure there are others like her, that it wasn't that at all.

Mr. LENTZ. It may not be. There are so many different causes. They are very broad, they are very rare, and in some cases they are just very, very difficult to duplicate. That is the frustrating part about researching what happens on some of these instances, especially if there is something that is going on with the throttle, if there aren't error codes and it can't be duplicated.

That was one of the challenges with the sticky pedal in the beginning, was by the time the consumer got it to the dealership all the moisture had dried from the pedal and the pedal wouldn't stick, and you have got a consumer saying I am telling you, I know this thing has been sticking but by the time they get to the store it can't be replicated. And that took a while to understand exactly what was going on.

Mr. ENGEL. But in every case? Would that happen in every case? Surely once there were many different instances, there seemed to be a pattern, that you didn't have to be a rocket scientist to say, hey, wait a minute, maybe something is wrong. There is not only the acceleration, but we have heard about the steering and brakes and other things.

It just seems that if you look at everything, it certainly seems to me that there was an attempt to keep it under the rug and keep it under the table and let's not tell anybody anything and maybe it will go away. And, of course, with all the testimony, NHTSA is to blame as well. But I just don't think that Toyota handled it properly.

So let me just—go ahead.

Mr. LENTZ. Well, in the case of brakes, if you are talking about the Prius brake, we jumped on that very quickly and have taken care of that. And in the case of Corolla steering, it is being investigated right now.

So, yes, we have complaints on it. NHTSA has complaints. And we are digging into that right now to find out what is the issue and let's make sure the customers are happy with their products and safe with their products.

Mr. ENGEL. So let me ask you this last question. When I was asked yesterday what would I ask you, I said what did you know and when did you know it and what do you know that we don't know yet. What do you know that we don't know yet? What is going to come out in the days and weeks? I know Mr. Toyoda is testifying in another committee tomorrow. What bombshells are going to come out that we don't yet know?

Mr. LENTZ. God, I hope there aren't any more. I have had enough bombshells for one year. Let's get back to the good old days of 2009, and I didn't think I would ever say that.

Right now, we have to fix the process so these things don't happen again. I don't know what is behind the curtain. No one knows in the auto industry as manufacturers what defects you could have down the road, what challenges you have. So it is important that we have built-in quality and built-in safety so we don't have these issues. And that is why our processes are changing, to make sure that we get back to where we once were.

This was a company for 50 years in the U.S. that whenever you said Toyota or you said Camry, it was quality, dependability, reliability and safety. And we have stubbed our toe and we have to get back to where that once was, and we are going to do that.

Mr. ENGEL. Well, I would hope so.

Thank you, Mr. Chairman, for holding the hearing.

Mr. STUPAK. Mr. Gingrey.

Mr. GINGREY. Mr. Lentz, very quickly, I could ask you a couple of yes-no questions like have you enjoyed being here today and do you want to take any more questions? I guess the answers would be yes and no. But seriously, I did want to ask you, do you think of this as a software or hardware problem?

Mr. LENTZ. In the case of the ETC?

Mr. GINGREY. Yes.

Mr. LENTZ. Again, based on our analysis of what we have seen, based on going to accident sites and checking these cars out, I don't think it is either right now. But Exponent has not tested the software yet, so that is yet to come. So if there is a software issue, if there is an issue about how independently these two processes are working, because that is the key to make sure that this thing works, we will know that.

Mr. GINGREY. But it could be either and you are going to get to the bottom of that?

Mr. LENTZ. We have to get to the bottom of it. And it may be that the bottom of it is they find nothing and we have another independent group that goes in and researches again.

Mr. GINGREY. Mr. Lentz, thank you.

Mr. Chairman, that is all I have got, and I yield back.

Mr. STUPAK. That concludes all questions of this panel. Mr. Lentz, thank you. We invite you to stay for the next panel. We have Secretary LaHood. We have five votes coming up. I am going to try to get the Secretary's testimony in and we can then go vote and have a little recess. Thank you.

Mr. LENTZ. Thank you very much.

Mr. STUPAK. I am going to ask the media to move out of the way, please. Secretary LaHood is here. We would like to hear his testimony and get it done before we have to go vote.

Mr. Lentz, I see you are moving out. If you would keep on, we are trying to get the Secretary in. I know you are getting crushed there, but we are trying to move things along.

I would like to call our third witness for today, the Honorable Raymond H. LaHood, Secretary of the United States Department of Transportation.

Mr. LaHood, welcome. Thanks for being here.

It is the policy of this subcommittee to take all testimony under oath. Please be advised you have a right under the rules of the House to be advised by counsel during your testimony. Do you wish to be represented by counsel?

Secretary LAHOOD. No. I am ready to be sworn.

[Witness sworn.]

Mr. STUPAK. Thank you, Mr. Secretary. We look forward to your opening statement, and then after that we are probably going to have to run and do some votes.

STATEMENT OF THE HON. RAYMOND H. LAHOOD, SECRETARY OF TRANSPORTATION, U.S. DEPARTMENT OF TRANSPORTATION

Secretary LAHOOD. Thank you, Mr. Chairman, for the opportunity to be appear before you today to discuss the important issue of Toyota's recent safety recalls.

Ever since I was sworn in as the Secretary of Transportation 13 months ago, I have said that safety is the Department's number one priority. I would like to think that we have demonstrated that commitment time and time and time again.

When the terrible crash of the Washington Metro system claimed nine lives and injured dozens of others last summer, we quickly introduced legislation to give us Federal safety oversight of transit systems sometimes we don't currently have.

When Colgan Air Flight 3407 crashed in Buffalo, we learned right away what many of the problems were, and we did not wait a year for the NTSB to conclude its investigation before we acted. We began working with the aviation industry immediately to enhance airline safety and pilot training, holding 12 safety summits around the country. This spring the FAA will issue a new rule to

combat pilot fatigue, and it has already been begun to overhaul pilot certification qualifications.

One of the hallmarks of my time as Transportation Secretary has been our work on distracted driving. For all of you with cell phones and BlackBerries and other electronic devices, I am on a rampage about people talking and texting while driving a bus, a car, a plane or a train. It is a menace to society and we recently exercised our authority to ban truck drivers from texting.

The reason I say all of this, my number one priority has been and will be, as long as I am in this post, safety.

Now, for Toyota. The Toyota recall situation is very serious and we are treating it seriously. The three recalls involving Toyota are among the largest in automobile history, affecting more than 6 million people in this country.

I would like to say a word directly to consumers. If you notice that your gas pedal or your brake is not responding as it normally would, contact your Toyota dealer right away.

The recent recalls involve three issues. First, accelerator pedal entrapment by floor mats, which can lead to uncontrolled acceleration at very high speeds. It is important to take your floor mats out of the driver's side of your vehicle until your car has been repaired for this problem by a Toyota dealer.

Second, accelerator pedals sticking or returning slowly after being depressed. If the pedal is harder to depress or slower to return after releasing it, this could be the precursor to what is known as a sticky pedal. If your pedal has these symptoms, contact your Toyota dealer immediately. If your gas pedal becomes stuck for any reason, steadily apply the brake, put the car in neutral, bring it to a stop in a safe place and call your dealer.

Finally, with the Toyota Prius for model year 2010 and the Lexus HS250, if you experience a change in your car's braking performance, contact your Toyota dealer.

Now, I want everyone to know that the National Highway Traffic Safety Administration has the most effective defect investigation programs in the world. Known as NHTSA, its job is to investigate complaints and to look for defects. It receives more than 30,000 complaints from consumers every year and reviews every one of them quickly and carefully.

Over just the past 3 years, NHTSA's defect and compliance investigations have resulted in 524 recalls involving 23.5 million cars. Of the 100 investigations NHTSA opens in an average year, there are currently 44 open defect investigations, five in which involve Toyota.

Every step of the way, NHTSA officials have pushed Toyota to take corrective action so that consumers could be safe. Unhappy with Toyota responsiveness to our safety concerns, the Acting Administrator of NHTSA, Ron Medford, and two associates flew to Japan in December of 2009 to clarify for Toyota management what the company's legal obligations are to find and remedy safety defects in vehicles sold here.

In January, our new Administrator of NHTSA, David Strickland, and Ron Medford, now our Deputy Administrator, told the President of Toyota North America in no uncertain terms that we expect

prompt action following the disclosure of the sticky pedal. Toyota publicly announced that recall 2 days later.

I have also talked personally to the President of Toyota. With potential fatal defects on the road, NHTSA has pressed hard to expedite these safety fixes. If NHTSA had opened a formal investigation and Toyota had resisted a recall, this would have consumed an enormous amount of time and resources, in effect extending the period in which owners of affected vehicles were at risk. By engaging Toyota directly, and persuading the company to take action, the agency avoided a lengthy investigation that would have delayed fixing for a year or more.

Last week I announced that we are investigating whether Toyota acted quickly enough in reporting these safety defects to NHTSA as well as whether they took all appropriate action to protect consumers. We have asked Toyota to turn over a wide range of documents which will show us when and how they learned about these safety problems. NHTSA will continue to make sure Toyota is doing all it has promised to make its vehicles safe. We will continue to investigate all possible causes of unintended acceleration.

While the recalls are important steps in that direction, we don't maintain that they answer every question about that issue. Some people believe that electromagnetic interference has a dangerous effect on these vehicles. Although we are not aware of any incidents proven to be the cause by such interference, NHTSA is doing a thorough review of that subject to ensure safety. If NHTSA finds a problem, we will make sure it is resolved.

Recently I spoke by phone with Mr. Toyoda. He assured me that Toyota takes U.S. safety concerns very seriously and that safety is the company's top priority. I intend to hold him to that.

Finally, I want to remind everyone there is a reason we investigate safety defects and there is a reason we push auto makers to do the right thing. I listened to the 911 tape of the Saylor family's harrowing last moments. Mark Saylor, a California highway patrolman, died last year along with his wife and his daughter and his brother-in-law when the accelerator got stuck and the Lexus they were driving crashed at more than 120 miles an hour. That is a horrible tragedy and one I hope that no other family has to endure.

Now, Mr. Chairman, I know that you all have to go vote, and I am certainly willing to stay and answer all the questions that any member wants. I want the committee to know, I was sworn in on January 23rd, 2009. I will take a back seat to nobody on safety. I have done a lot. We have done a lot. So I will try and answer every question as specifically as I can during my time as the Secretary. And for those that I don't know the answer to prior to my tenure, I will be happy to get all the information possible for the record.

Thank you very much.

[The prepared statement of Mr. LaHood follows:]

STATEMENT OF
THE HONORABLE RAY LAHOOD
SECRETARY OF TRANSPORTATION
BEFORE THE

COMMITTEE ON ENERGY AND COMMERCE
SUBCOMMITEE ON OVERSIGHT AND INVESTIGATIONS
U.S. HOUSE OF REPRESENTATIVES

HEARING ON

RESPONSE BY TOYOTA AND NHTSA TO INCIDENTS OF SUDDEN UNINTENDED ACCELERATION

February 23, 2010

Chairman Stupak, Ranking Minority Member Walden, and Members of the Committee:

Thank you for the opportunity to appear before you today to discuss the important issue of Toyota's recent safety recalls and the broader issue of sudden unintended acceleration.

Transportation safety is the Department's highest priority. We understand the level of concern about the safety of Toyota vehicles, particularly with regard to unintended acceleration. I would like to explain the recent recalls, the role that NHTSA played in ensuring the recalls occurred, and the actions NHTSA is taking to identify any additional safety defects that might cause unintended acceleration.

The recent Toyota recalls related to unintended acceleration involve two issues: first, accelerator pedal entrapment by floor mats, which can lead to uncontrolled acceleration at very high speeds; and second, accelerator pedals sticking or returning slowly after being depressed, which occurs at a variety of throttle positions but, to the best of our knowledge, is more likely to occur at low throttle positions more readily controlled by the vehicle's brakes.

Before I discuss the details of these two recalls and NHTSA's investigations, I want to clarify what owners of vehicles affected by these recalls should do. To avoid pedal entrapment, remove all floor mats from the driver's side of your vehicle until you receive the repair for this problem from a Toyota dealer. If you do not remove the mat, make sure that it is always securely anchored in place on the retaining hooks and that no other mats are ever stacked on top of it. If your vehicle is covered by the "sticky pedal" recall, pay special attention to your gas pedal. If the pedal is harder to depress or slower to return after releasing it, this could be a precursor to a sticky pedal. If your pedal shows those symptoms you should contact a Toyota dealer immediately. If your accelerator becomes stuck for any reason, steadily apply the brake, put the car in neutral, bring it to a stop in a safe place, and call your dealer.

Pedal Entrapment

Of the two big recalls, the far more serious problem, in our view, is pedal entrapment by floor mats. We are aware of five deaths that have occurred due to this problem, including a tragedy near San Diego last August that claimed four lives. We have the greatest sympathy for the loved ones of those members of the Saylor and Lastrella families who died in that crash.

Pedal entrapment involves a situation in which the driver intends to accelerate quickly (such as when passing another car or entering a freeway) and depresses the accelerator pedal toward the floor of the vehicle. When pushed far enough the pedal becomes entrapped by the floor mat in full open throttle position. Once the pedal is entrapped, the vehicle will continue to accelerate well in excess of the driver's intent unless the driver can overcome that situation. Given the very high speeds involved and the firmness with which the mat is holding the pedal at full throttle, these are the most dangerous situations we are aware of that come under the broad heading of unintended acceleration. It is very important to note that, even on the recalled vehicles, entrapment by the mat can occur only if the floor mat is out of position because it is not secured, one floor mat is stacked on top of another floor mat, or a floor mat is used that is not intended for use on the vehicle and is inappropriate due to its shape or dimensions.

NHTSA first became aware of this phenomenon in Toyota's Lexus ES350 in 2007 and quickly opened an investigation in March of that year. NHTSA acted based on five complaints from vehicle owners. No related fatalities had been reported at the time the investigation began, but there had been three crashes allegedly related to pedal entrapment by the floor mat. At the time, the problem seemed most likely to occur in Lexus ES350 vehicles where a thick, all-weather floor mat offered as an option by Toyota was used. The shape of these floor mats and a raised portion forming a ridge made them particularly likely to entrap the pedal if not properly secured. So far as NHTSA knew at that time, the accelerator pedals themselves were functioning as designed and the problem centered on the way the pedal could be entrapped by these floor mats under certain conditions.

NHTSA escalated the investigation to an engineering analysis five months later, in August 2007. Shortly before that, a fatal crash involving a Camry occurred that was apparently caused by entrapment. In September 2007, Toyota announced a recall of the all-weather mats in Lexus and Camry vehicles. The remedy was to have the dealers remove the mats and provide a re-designed mat that was shaped in a way that addressed the entrapment risk even if the re-designed mat was improperly anchored.

At the time of the 2007 recall, NHTSA also issued a safety advisory, directed especially to owners of the recalled vehicles but also to all drivers, warning of the serious dangers of not properly anchoring mats or stacking mats on top of each other. At that time NHTSA believed that the recall and removal of the most problematic mats, the improved design of the replacement

mats, and education of the public and dealers about the proper use of mats would substantially eliminate the known risk related to pedal entrapment.

NHTSA continued to monitor the situation and became aware of a post-recall crash involving one of the recalled mats that the owner had not removed. Fortunately, that was not a fatal crash but did result in serious injury. In light of that crash and indications that consumer response to this recall was too low, NHTSA urged Toyota to re-notify vehicle owners, which Toyota did in January 2009.

Eight months later, when the San Diego fatal crash occurred on August 28, 2009, NHTSA immediately began to investigate the circumstances of the crash. NHTSA investigators and the San Diego County Sheriff's Department examined the wreckage of the vehicle and concluded that the likely cause was excessive speed due to entrapment of the accelerator pedal by the floor mat. The vehicle was a Toyota Lexus ES350 on loan from a Toyota dealer for the day. The floor mat in the vehicle was designed for a Toyota Lexus RX SUV and was much longer than the mat that would have been proper for the Lexus ES350. At the time NHTSA investigators viewed the wreckage, the accelerator pedal was still fused to the floor mat, apparently melted in that position by the heat of the fire that followed the crash. Combining that observation with the circumstances known to have occurred immediately prior to the crash, including extremely high speeds and the driver's inability to control the speed, NHTSA concluded that the excessive speed was caused by pedal entrapment. Supporting this conclusion was the fact that another customer of the dealership had used the same vehicle just three days earlier and complained of unintended, high-speed acceleration caused by the pedal having been trapped by the mat until he was able to stop the vehicle and free the pedal.

The San Diego tragedy made clear that the entrapment problem could occur in unexpected ways and that recalling the worst performing mats and educating drivers and dealers about not using unsecured, improper, or stacked mats was not going to adequately address the risk. Apparently not even all Toyota dealers were mindful of the need to ensure proper mats and mat anchorage to avoid entrapment.

As a consequence, NHTSA began to explore additional remedial options. The agency continued to review all relevant data to identify any reports that might be linked to similar entrapment in other Toyota vehicles. NHTSA became focused on the pedal design of a number of Toyota vehicles, not because of any known malfunction in their operation but because their shape tended to make entrapment more likely when floor mats are out of position or stacked. NHTSA prepared to open an investigation on the pedal design. At the same time, the agency informed Toyota that the company needed to address this risk promptly as a vehicle defect issue, and requested that Toyota conduct a recall. Toyota responded to NHTSA by announcing a recall to replace or re-shape the pedals in 3.8 million vehicles and sent its official notice of the recall to NHTSA on October 5, 2009.

NHTSA pressed the company to include as part of its recall the addition of a feature called brake override (which some call "smart pedal") technology on models that have keyless ignition systems. With brake override, the vehicle control system gives priority to the signal from the brake pedal and returns the engine to idle when it detects the brake being applied while the accelerator is applied. NHTSA discovered in its investigation of pedal entrapment incidents that in some situations drivers of vehicles with keyless ignition systems did not know that, in Toyota vehicles, they could shut off their engines when in motion only by depressing the dashboard ignition button and holding it for three seconds. The owners were familiar with shutting off the vehicle when it was stopped, which requires holding the button for just one second or less. NHTSA thought it was especially important to ensure that in those vehicles with keyless ignition the driver had the benefit of brake override. Many other manufacturers use this technology and Toyota uses it in newly produced vehicles. The recall Toyota announced in October adhered to NHTSA's request.

NHTSA continued to monitor incoming reports involving relevant incidents. In January, NHTSA told Toyota that its review of other Toyota vehicles indicated that they needed to be included in the pedal entrapment recall. Toyota responded by adding 1.1 million vehicles to the pedal entrapment recall on January 27, 2010.

Under the law, manufacturers have an obligation to notify NHTSA within five days of determining that a defect or noncompliance exists. When manufacturers voluntarily initiate recalls without waiting for NHTSA to order a recall, the process protects the public most quickly. NHTSA can order manufacturers to do recalls but only after initiating a formal investigation, completing its investigation, and following administrative procedures that include a public hearing and opportunities for the manufacturer to file detailed responses. Even after the NHTSA Administrator issues an order directing a recall, the manufacturer can avoid doing the recall until NHTSA proves its case in court. In such a case, the agency has the burden of proving by a preponderance of the evidence that a vehicle defect exists and that it creates an unreasonable risk to safety. As a result, recalls occur most quickly when a manufacturer announces the recall without waiting for NHTSA to open and complete an investigation. That is what happened here—because of the pressure NHTSA applied.

On February 16, NHTSA sent Toyota a Timeliness Query, which is a detailed request for information about when Toyota learned about the defect addressed by this recall. The information Toyota will provide in response to this request will help NHTSA determine whether Toyota's initiation of the recall met its obligation to notify NHTSA quickly. If NHTSA determines that Toyota did not meet that obligation, NHTSA may seek civil penalties from Toyota for that failure. Those penalties could be as high as $16,375,000 for a related series of violations.

CTS Pedals Sticking

I want to turn now to the "sticky pedal" recall that was initiated in January of this year. NHTSA is not currently aware of any injuries or deaths definitively linked to this problem. Unlike the pedal entrapment recall, which concerns the shape of the pedal that makes it more susceptible to entrapment by an external object (the floor mat), this recall involves the internal working of the pedal assembly. Another distinguishing factor is that the pedal entrapment situations involve instances of full acceleration that are initially intended by the driver, while this problem, to the best of our knowledge, generally involves occurrences at lower power levels where the car continues to accelerate because the pedal does not return upward, or returns slowly, when the driver lessens pressure on the pedal.

The affected pedals are manufactured by CTS Corporation, which is based in Elkhart, Indiana. Some Toyota vehicle owners have complained of certain symptoms in vehicles equipped with those pedals. Those symptoms include a feeling that it is harder than normal to depress the pedal or that, when depressed, it is slower to return. In some circumstances, the situation can involve the pedal not returning at all from the position to which it was depressed. At this time, we understand that this problem is mechanical in nature and does not involve a flaw in the electronic signal being sent from the pedal sensor to the throttle.

In November 2009, NHTSA received several Toyota field reports concerning incidents in which pedals were slow to return or sticking in a number of different Toyota models from various model years. The reports did not indicate a root cause of the symptoms drivers were experiencing. NHTSA reviewed those reports as part of its screening for possible defect trends. Before NHTSA had decided whether or not to open an investigation, Toyota contacted the agency on January 16 about the specific problem it had identified with the CTS pedal. NHTSA told the company it needed a full explanation immediately. Toyota met with NHTSA on January 19 and demonstrated what it thought to be the mechanical problem with the CTS pedals. Based on the information presented by Toyota about the nature of the problem and Toyota's experience with it, NHTSA told the company it expected very prompt action. Two days later, on January 21, Toyota announced the recall, covering some 2.3 million vehicles (many of which are also covered by the pedal entrapment recall and will receive both remedies). Toyota has had the supplier produce a new pedal with a different design that the company believes addresses the issue of excessive friction. The company has also devised an interim remedy to eliminate the safety risk by altering the pedal while new ones are being manufactured. Toyota informed NHTSA that it ceased production of new vehicles in the models affected by this recall so that it could begin to supply the new pedals being produced for the assembly line to dealers for installation in existing vehicles.

On February 16, NHTSA sent Toyota a Timeliness Query about this recall. NHTSA has also begun an investigation to determine whether these particular CTS pedals have been installed in

vehicles other than those recalled by Toyota, including those made by other manufacturers. NHTSA will soon receive relevant information from CTS and evaluate it.

Other Instances of Unintended or Excessive Acceleration

NHTSA receives more than 30,000 complaints from consumers every year concerning perceived safety problems with their vehicles. NHTSA reviews every complaint promptly and, if it appears to contain any evidence related to a safety defect trend, the reviewers begin to track that trend for possible investigation. Among those complaints in recent years have been many allegations of unintended or excessive acceleration on vehicles made by Toyota. Of course, during that same period NHTSA has received thousands of complaints containing such allegations concerning the vehicles made by most major vehicle manufacturers.

The agency has also received several petitions requesting that NHTSA investigate unintended acceleration in various Toyota vehicles. When a member of the public petitions NHTSA to investigate a possible defect, NHTSA examines all information submitted by the petitioner as well as all other information relevant to the particular problem cited by the petitioner. Even where NHTSA denies a defect petition, it does so only after conducting so thorough an examination of the issue that it has effectively done a preliminary investigation. Generally, NHTSA will visit the petitioners, interview them about their experiences, examine their vehicles and vehicle history, drive the vehicles, and search the NHTSA data bases for complaints similar to the experiences petitioners had. In some situations NHTSA will conduct more extensive testing of a vehicle of the same make and model as that of the petitioner.

The information NHTSA has received from consumers concerning unintended or excessive acceleration in vehicles can be divided into general categories that include: engine surging that lasts only a second or two; unintended acceleration from a stopped position or very low speed that results in quick movement over a short distance and sometimes results in crashing into an object; and events that begin at high speeds because the driver intended to accelerate quickly and continue for a sustained period of many seconds or minutes beyond what the driver intended. The possible causes of these events that NHTSA has been able to identify include mechanical problems with the accelerator; obstruction of the accelerator by another object; or human error (pressing the wrong pedal).

NHTSA has carefully reviewed all of the information provided by Toyota consumers in complaints filed with the agency to try to find causes for what they were experiencing. NHTSA also reviews Early Warning Reporting information submitted by the manufacturer and other sources of information, including insurance company submissions. For the high-speed events that last for many seconds or minutes, the only cause NHTSA has been able to establish thus far is entrapment of the pedal by a floor mat. The only exception to this has may have been a recent event in New Jersey that apparently did not involve floor mat entrapment but apparently did

involve a stuck CTS pedal. Fortunately, the driver was able to bring the vehicle under control and drive it to a dealership. As discussed, the pedal entrapment issue in the recalled vehicles will presumably be resolved by the recall announced in October. The problem experienced in New Jersey will presumably be addressed by the recall of the CTS pedals announced in January.

NHTSA does not contend that the two recalls will fully resolve all concerns about unintended acceleration in Toyota vehicles. However, with one exception, NHTSA has not been able to establish a vehicle-based cause for unintended acceleration events in Toyota vehicles not covered by those two recalls. The exception was a recall of the model year 2004 Sienna vans in 2009 due to a defective trim panel that could, if loosened during servicing, entrap the accelerator at full throttle. That recall also arose from a NHTSA investigation.

NHTSA initiated a Recall Query on February 16 to ascertain whether Toyota has been completely forthcoming with the agency concerning all possible defects in its vehicles that may be causing unintended acceleration. NHTSA will closely review the documents Toyota submits to determine whether the company has additional information not yet shared with the agency that may cast light on possible defects that cause the problem.

Some consumers and others believe that Toyota's electronic throttle control (ETC) systems, and perhaps such systems in other manufacturers' vehicles, are susceptible to electro-magnetic interference (EMI) that can theoretically cause unintended acceleration by resulting in incorrect signals to the engine. These types of electronic systems are commonly used by all major vehicle manufacturers. To date, we have not identified any particular crash or unsafe occurrence that can clearly be attributed to such a phenomenon. NHTSA opened an investigation on Toyota's ETC system in 2004, focused on short duration events, and could not find any safety defects in that system at the time. NHTSA looked at short duration events where no brake application was alleged in this investigation so as to screen out events that could have been caused by driver error, to ensure the agency could find a vehicle-based defect if it existed. In 2008, in wrapping up the floor mat investigation, NHTSA went on to look for additional possible causes of unintended acceleration in the Lexus ES350. That work included some limited electronic and magnetic testing but did not reveal a flaw in the ETC system. Since 1980, NHTSA has conducted 141 investigations on throttle control issues in vehicles made by various manufacturers, some of which involved electronic throttles and some the more traditional mechanical throttle systems.

However, to be absolutely sure that the agency is aware of all potential defects, NHTSA is conducting a review of the general subject of possible EMI effects on ETC systems. We have begun by talking to Toyota and other major manufacturers about the design of their systems and how, through failure modes and effects analysis and other standard techniques, they have taken the possible effects of EMI into account in designing those systems. This is a review of the technological issue, not a defect investigation. However, if any of this activity gives us any

reason to believe that a defect may exist in Toyota or other vehicles related to EMI effects on ETC systems, we will open a defect investigation. When we have completed these discussions we will decide whether to conduct any additional research projects that might shed further light on the possible role of EMI effects on various electronic components in vehicles that are safety-related.

Other Pending Toyota Investigations

NHTSA has a total of 44 pending defect investigations concerning various manufacturers and a wide range of issues. Of those, five concern Toyota. One of the Toyota investigations is the Recall Query on sudden acceleration discussed above. Two others have gained wide attention and are summarized here.

NHTSA opened an investigation on February 4, 2010, concerning a braking problem on the model year 2010 Prius. The problem involves a momentary loss of braking when the vehicle hits a pothole, bump, or other uneven surface. NHTSA had received more than 100 complaints about the problem, including four alleged crashes involving two injuries. Five days after NHTSA opened its investigation, on February 9, Toyota announced a recall designed to address this problem. NHTSA will closely monitor its implementation. The recall involves over 148,000 vehicles sold in this country, including the model year 2010 Prius and the 2010 Lexus HS250H. While awaiting an appointment to have their vehicles remedied, owners who experience any braking problems should immediately contact their dealers, and all drivers of these cars should allow extra stopping distance until the problem is fixed.

On February 18, NHTSA opened an investigation concerning approximately 487,000 model year 2009 and 2010 Toyota Corolla and Matrix vehicles. The issue concerns the steering becoming unresponsive or loose at highway speeds. NHTSA had received 168 complaints alleging eight crashes (none fatal) at the time this investigation was opened.

As a final note, I would like to make clear that NHTSA has a very aggressive enforcement program that searches constantly for safety defects and noncompliance with the Federal Motor Vehicle Safety Standards. In just the last three years, NHTSA investigations have resulted in 524 recalls in which 23.5 million vehicles were recalled so that safety problems could be fixed. In addition, several million items of motor vehicle equipment (including imported tires, child seats, and motorcycle helmets) were recalled to correct safety problems.

In summary, NHTSA has acted to ensure Toyota recalls on the issues related to unintended acceleration on which we have had evidence indicating the presence of a vehicle defect, i.e., pedal entrapment and sticky accelerators. We stand ready to ensure prompt action on any additional defects that we have reason to believe are present.

Thank you and I look forward to answering your questions.

Mr. STUPAK. Thank you, Mr. Secretary. You are right, we do have votes. We have five votes. We are going to be in recess until 5:30. I would appreciate it if you would stay. We would look forward to your answering questions then. If you want to walk to the floor with us, you are more than welcome to do so.

[Recess.]

Mr. STUPAK. The committee will be back in order.

Mr. Secretary, thank you again for your patience. Thanks for being here. You can tell by all the interest in the committee members who are not even members of the subcommittee that have stayed throughout this hearing to ask questions. A lot of interest here on this Toyota matter and what has happened and Toyota's role. I know you have only been there for about a year.

One of the things that struck me—and let me just ask and say this politely—but it seems like all decisions on Toyota, especially dealing with safety issues, the decisions are made in Japan. You mentioned in your testimony you sent Mr. Strickland and others to Japan to talk to Toyota representatives, or I should say the head of Toyota, which just further emphasizes the point everything is made in Japan.

The problem is here in America. Why couldn't we have dealt here with it in the United States? Or is everything compartmentalized that strict with this organization or company that the decisions have to be made in Japan?

I find that a little odd, that is all. Do you care to respond to that?

Secretary LAHOOD. I plan to meet with Mr. Toyoda, who will be in the United States this week. He has agreed to meet with me. One of the things I am going to express to him is they have some very good people in North America, some very good people, but perhaps they need to look at their business model. And what I mean by that is that when their good, experienced, qualified professional people in North America make recommendations, they need to listen to them.

Mr. STUPAK. Did your investigation show——

Secretary LAHOOD. Our people met with the North American people, but we decided to go directly to Japan.

Mr. STUPAK. Why? Because they could not make a decision here in the United States?

Secretary LAHOOD. Because we felt that maybe the people in Japan were a little bit safety deaf. We wanted to give them an opportunity to hear directly from us that this——

When I talked to Mr. Toyoda, I said three things. The first thing I said is this is a very serious matter for your company and America. I want you to know that DOT is taking it seriously. We are not going to sleep until every one of your cars is safe for Americans to drive. And then I invited him to come to America.

Mr. STUPAK. I called you after those articles appeared, and we never had a chance to talk. But you have been proactive in trying to get in front of this.

One of the concerns that I have and has come out is that 70 percent of this sudden unintended acceleration, we still don't have an answer for. In fact, I think, according to all the documents from NHTSA and also from Toyota, their database, that only 16 percent of these sudden accelerations are really addressed with the floor

mat and the sticky accelerator, if you will. The electronics seems to have to have some part of it on this remaining 70 percent.

Secretary LAHOOD. As I said in my testimony, we are going to do a complete review of the electronics. We will meet with the folks from Southern Illinois University, take a look at the results of what they have had to look at. We will look at what the Toyota folks have done with the people that they have hired. We are going to get into this. We are going to get into the weeds on the electronics. We feel an obligation to do that, because we get 30,000 complaints a year, and we take every one seriously. We don't just set them off to the side. We look at every one. And when we see a few start to stack up, then we really get into it. We are going to get into the weeds on the electronics. I commit to you we are going to do that.

Mr. STUPAK. How about this event data recorder that records information 5 seconds before an accident, 1 after?

Secretary LAHOOD. We have a review of that going on right now.

Mr. STUPAK. But it says your NHTSA investigators have been at some of these accidents sites like the Southlake, Texas, one on January 12, 2010. They were there. The one that happened up in Auburn, New York, that one was also NHTSA folks were there. In fact, it says investigators from NHTSA took the black box on November 27. What did your investigators do with the black box if you don't have any way to read it?

Secretary LAHOOD. Our challenge is to investigate these, to look into them, and to render some judgment about it.

Mr. STUPAK. Would your investigators have taken the black box?

Secretary LAHOOD. You know, Mr. Chairman, I don't know the specifics on that incident, but I will check it out.

Mr. STUPAK. I got that from your outline that NHTSA provided us, all the actions you took.

Secretary LAHOOD. OK.

Mr. STUPAK. Do you have any knowledge of them taking that?

Secretary LAHOOD. I don't.

Mr. STUPAK. Dr. Gilbert, who testified earlier today, indicated that he was able to bypass the system and the diagnostic code would not come up. It was a bookend, as we call it, one of the things that could happen on the sudden acceleration. He said he notified NHTSA of the test results, what he found, and tried to contact NHTSA. All he got back was a form, an e-mail form saying thank you for contacting us. Can you assure us that NHTSA is going to follow up with Dr. Gilbert?

Secretary LAHOOD. You have my 100 percent commitment that we will get in the weeds on that. We will talk to anybody that wants to talk to us. We will look at studies that have been conducted already, whether it is SIU or studies that have been done through the Toyota program. We will figure this out. I know that all of you think this is a serious issue and so we think it is a serious issue.

Mr. STUPAK. Well, we know how serious you think it is because you had them stop building cars here in the United States, certain models. Are they still building those cars? Are they still on a pause? What is the status on Toyota?

Secretary LAHOOD. On what, again?

Mr. STUPAK. On building some of the cars, some of their models in the United States. They stopped after your intervention. Have they started reproducing those cars again?

Secretary LAHOOD. That I don't know. I will have to get back to you on that.

Mr. STUPAK. Does NHTSA need the responsibility—I should say, does NHTSA need to accept some of the responsibility? We heard from the Smiths today about how they felt that NHTSA just came out and tried to convince them that it was the floor mats. Is there some responsibility NHTSA shares in this whole situation?

Secretary LAHOOD. If you look at my testimony, Mr. Chairman, no one has talked more about safety in Washington, D.C., and around the country than Ray LaHood since January 23, 2009. We had 12 safety summits on regional jets. We had a day and a half distracted driving conference. We stepped up on a tarmac rule so that people don't have to sit on airlines more than 3 hours. We suspended air traffic controllers when there was a crash over the Hudson River between a helicopter and a small plane. And we also investigated when the pilots overflew Minneapolis by 150 miles.

We are not sitting around on our hands. Safety is our number one priority. We take it seriously. We take every complaint seriously. We look at it. We open investigations when we think it needs to be done.

Mr. STUPAK. No one doubts your aggressive enforcement action. The problem we have up here, if we have all these complaints on sudden surges in this vehicle, Toyota vehicles, and we have got 70 percent unresolved, how do we resolve that 70 percent that is still unaccounted for, unexplained, and we have millions of these vehicles on the road?

Secretary LAHOOD. Well, we will continue our investigations which we have going on. There are currently investigations going on. There are recalls going on, many of them sparked by the Department of Transportation and NHTSA, initiated by us.

Mr. STUPAK. Which can't continue the investigation as NHTSA has, when in 2004 when you did your report, your ODI, as they call it, March 23, 2004, you closed it on July 22, 2004. During that period of time there were five fatal accidents involving surges, and basically the NHTSA investigators said it doesn't count because we are only looking for momentary surge. Those surges or that accelerator stayed on too long. So we just disregarded it. It almost looked at it with blinders on. When we do this investigation, get that 70 percent, we can't do that.

For the love of me, I was an investigator. You do an investigation, you get five fatal accidents come in and you can't explain, and people think the car went really fast and there might have been a surge in acceleration, and you don't take into consideration your report, that is just poor work.

Secretary LAHOOD. Well, that won't happen on my watch.

Mr. STUPAK. Very good.

Mr. Burgess.

Mr. BURGESS. Thank you, Mr. Chairman.

Secretary, welcome to our committee. My staffer is going to bring you something to look at.

While she's doing that, I have been trying to get an unredacted report of the NHTSA report on the Mark Saylor accident. I realize that the appropriate person to ask is the head of NHTSA, but we don't get to ask the head of NHTSA in this committee. I have got you. So I'm going to ask you. Can my office have made available to it an unredacted NHTSA accident report on the Mark Saylor accident?

Secretary LAHOOD. If it's legally possible for us to do it, absolutely.

Mr. BURGESS. You can see my problem when I try to read the report. Paragraph five is blacked out. Now perhaps that is something that is not pertinent to me in general circulation or open source. I'm willing to come down to your place and review it under armed guard, if necessary.

But it raises questions back home. I mean, I have people on the radio talking about why can no one see an unredacted report. Again, if it's something that relates to the accident that would be harmful to the family to have out in general circulation, I understand that. But I would certainly as a Member of Congress who does have some clearance to look at things, I think that should be made available.

Secretary LAHOOD. Let me just say, Mr. Burgess, what I will do is ask our general counsel to brief you on this, on what we can say and what we can't say, and we will try and do that very quickly here.

Mr. BURGESS. As you know, once the information is denied to you, the fantasy can become more extreme than the reality. It would be helpful to me to know what has been redacted from that.

On the issue of—and I appreciate that you have only been there for 1 year. I appreciate your comments about safety being a top priority.

She brought to you a graph showing uncommanded accelerations in the Camry vehicle. I believe this is a NHTSA-produced document. Clearly, without getting into great detail, this was a change about 2001 or 2002 where the number of incidents were very low and then suddenly it goes high and stays high. My understanding from Mr. Lentz's testimony is that coincided with the time that the electronic throttle control became marketed upon those automobiles.

I would just ask the question, should there have not been some curiosity at some point as to why this is happening now at a level previously unprecedented? What has changed in the manufacturing? The electronic throttle control is one thing. Were there other things that changed in the manufacturing? If safety is going to be job one, it can't take us that long to investigate these things, and it certainly can't take a very dramatic and tragic accident to spark the investigation.

So the only point I would make from that, again, a NHTSA-produced document. I realize that personnel does change from time to time. But we have to keep that—obviously, that has to be foremost in our minds.

Now from the NHTSA documents that we have, it looks like they have received 113 vehicle owner questionnaires alleging sudden and unintended acceleration related to the throttle. The Office of

Defect Investigations believes that only 14 of those questionnaires were relevant to the throttle control. So how does that office narrow that number down? How are cases included or excluded where only about 10 percent of the cases that were brought to NHTSA attention were actually thought to be an uncommanded acceleration?

Secretary LAHOOD. By looking at the documents, by interviewing people, by talking to people, and then by making a judgment about whether it's something that has validity or standing.

Mr. BURGESS. In light of some of the things that we've heard in our testimony today, should we go back and look at those other nine out of ten that were deemed not to be—not to represent true uncommanded accelerations? Perhaps they deserve a closer look or closer scrutiny.

Secretary LAHOOD. Well, I take your point on that. I go back to what I said to Chairman Stupak, that we are going to really get in the weeds on the electronics. I assume that we will take a look back at some of those.

Mr. BURGESS. I guess just very recently, within the last day or two, your Inspector General from the Department of Transportation announced an audit initiated on NHTSA's Office of Defect Investigations. The audit is going to build on earlier works concerning implementation of the TREAD Act. The specific understanding is going to focus on recent actions taken by the agency regarding Toyota recalls. Obviously, this is something you felt was necessary to do.

Secretary LAHOOD. Look, the Inspector General does his own thing. He's an independent operator. He doesn't take his cues from me. He decided to do this I think either at the request of Congress or because his people thought it was something to do. He doesn't consult with me on these things. He lets me know, but he doesn't consult to see if I agree with him or not.

Mr. BURGESS. Has he let you know the scope of the investigation, what it will include?

Secretary LAHOOD. He has.

Mr. BURGESS. Can you share that with us?

Secretary LAHOOD. I think he posted it on his Web site, which would be our Web site. I think it's up.

Mr. BURGESS. When that report becomes available——

Secretary LAHOOD. He will make it available. As soon as it's complete, he puts it up on his Web site.

Mr. BURGESS. Now everything that we have heard today on the issue surrounding the Toyota uncommanded acceleration gives people the impression there's a lot of problems with this product. If you actually list things down, the number of problems per vehicle mile—or percent of market share I guess is a more appropriate measurement—Toyota is not really high on that list, are they?

Secretary LAHOOD. In terms of?

Mr. BURGESS. The number of incidents or percentage of market share. I mean, a NHTSA document that is available actually ranks Toyota number 17. There are 16 other automobiles that have more problems per percent of market share.

Secretary LAHOOD. If you look at the 30,000 complaints we receive and you look at the investigations we do and then you look

at the recalls, the vast majority of them are not with Toyota. They are with other brands of automobiles.

Mr. BURGESS. But we are talking today about an increased level of scrutiny because of perhaps some of the uncommanded accelerations were missed in earlier investigations. I guess the only question is, are you going to go back and look at some of those other vehicle manufacturers that are higher on the list for these types of incidents?

Secretary LAHOOD. Yes.

Mr. BURGESS. Have you already initiated that?

Secretary LAHOOD. We are just—as I said, we are just starting our review and our look back.

Mr. BURGESS. Well, Mr. Chairman, when that data becomes available, again, we'd appreciate you sharing it.

Secretary LAHOOD. Thank you. We will.

Mr. STUPAK. Thank you, Mr. Burgess.

Chairman Waxman, please, for questions.

Mr. WAXMAN. Thank you very much.

Secretary LaHood, our review shows that you had 2,600 complaints concerning this sudden unintended acceleration but that NHTSA only looked at the electronic systems one time, and that was in 2004. Is that correct?

Secretary LAHOOD. Yes, sir.

Mr. WAXMAN. Do you think that the 2004 investigation was sufficient?

Secretary LAHOOD. I think that under our watch we are going to get into the weeds and we are going to have a complete review on the electronics.

Mr. WAXMAN. Looking back from here, there was only one review, and that was in 2004. Would you say that was sufficient? I know you are planning——

Secretary LAHOOD. No, no. The answer is no.

Mr. WAXMAN. We have looked at the record, and the 2004 investigation was not comprehensive or in depth. It was headed by an individual who in an e-mail to Toyota officials said that he was not very knowledgeable about electronic throttle systems. It excluded the vast majority of complaints involving sudden unintended acceleration, including the most dangerous type, high-speed events in which the brakes are unable to stop the vehicle.

It appears that NHTSA never independently evaluated Toyota's claim about the adequacy of its systems, and there's no evidence that NHTSA did its own testing of electronic throttle control systems. Your staff told us that you had no electrical engineer on staff to help you assess the problem, and they never hired an outside electrical engineer.

Now I know you weren't around then, so I don't blame you, but I am concerned that I haven't heard you express any disagreements with any decisions made at the agency before your time. Am I stating that incorrectly? Do you feel the agency has done what it should have done prior to your being there?

Secretary LAHOOD. What I have tried to do is be forward looking, Mr. Chairman. I have spent the last year talking about safety. I have traveled the country. I have been to 35 States and 80 cities. Everywhere I go I talk about safety, whether its car safety, air-

plane, train safety. The train crash in California was caused by a distracted train driver, and that is why we decided to take on that cause. We will continue to do that.

Mr. WAXMAN. Mr. Secretary, I applaud you for your efforts in what you have told us about how high a priority safety is, and I'm pleased that you're going to take that position and try to steer the department, the National Highway Traffic Safety agency, under your watch to do the kind of job that needs to be done. I think that part of it is leadership.

But I think there needs to be a fundamental reform. Some of that you can do administratively and some may require legislation. We will be here to help you. We want this agency, as you want, to do the job of protecting the safety of the American people.

I must say, as I look at the record, it's not a happy one, it's not a successful one, and it's not the one that you and I want from that agency. Let's both look forward and make the changes to assure the American people that that situation is going to be different in the future.

Secretary LAHOOD. Well, Mr. Chairman, I would say this. I don't know of another Member of Congress while I was serving or since I have left that has been more concerned about these issues than you have. We really appreciate your support on this. We may be coming to you and asking for some legislative remedies, and I know you will be there for us. That may be happening sooner rather than later. And if you have legislative remedies, we want to work with you on this.

Mr. WAXMAN. Mr. Rush is the Chair of the subcommittee with the legislative jurisdiction. We are going to work with him and with you to do what we need to do in terms of the law to give you the powers and give that agency the powers to do what needs to be done. I know you're determined to accomplish that goal. So I look forward to working with you on that.

Secretary LAHOOD. Thank you.

Mr. WAXMAN. Thank you, Mr. Chairman. Yield back.

Mr. STUPAK. Thank you, Mr. Waxman.

Mr. Dingell for questions, please.

Mr. DINGELL. Mr. Chairman, thank you.

I'd like to welcome my old friend Mr. LaHood back.

Mr. Secretary, welcome.

Secretary LAHOOD. Thank you, sir.

Mr. DINGELL. Mr. Secretary, yes or no, to your knowledge has Toyota complied with the statutory and regulatory obligations, whether mandated under the TREAD Act or otherwise, in conducting its 2009 and 2010 recalls related to sudden unintended acceleration?

Secretary LAHOOD. I'd rather get back to you on the record, if I could, sir.

Mr. DINGELL. All right. If you will submit a proper response at a time later.

Mr. Secretary, if Toyota has not complied with the statutory regulatory obligations related to these recalls, will you please submit for the record a description of how and what punitive action the Department of Transportation has taken as a result of this noncompliance.

Secretary LAHOOD. Yes, sir.

Mr. DINGELL. Now, Mr. Secretary, since 2001, how many reports of sudden unintended acceleration has the Department of Transportation received from Toyota Motor Sales USA, Inc.? Would you please submit a list and a description of each and every one of these reports for the record?

Secretary LAHOOD. Yes, sir.

Mr. DINGELL. Do you know whether you have received all of these or not?

Secretary LAHOOD. I will submit that for the record.

Mr. DINGELL. All right. Mr. Secretary, again, yes or no, are the Secretary of Transportation and NHTSA administrator empowered under statute to visit foreign automakers in their home country?

Secretary LAHOOD. Yes.

Mr. DINGELL. Mr. Secretary, yes or no, have the Secretary of Transportation and NHTSA administrators done so in the past?

Secretary LAHOOD. Yes.

Mr. DINGELL. Mr. Secretary, would you describe such visits to the headquarters of foreign automakers as routine or commonplace?

Secretary LAHOOD. Commonplace.

Mr. DINGELL. Commonplace?

Secretary LAHOOD. I mean, we try and make visits. Our NHTSA folks try and do it on a regular basis, yes.

Mr. DINGELL. Is are there anything extraordinary here about you having the administrator or the acting administrator go over there while this investigation is going on?

Secretary LAHOOD. Yes. That was a special trip. That was not a routine trip. That was a special trip.

Mr. DINGELL. Special trip. Why was this a special trip that you and the administrator made?

Secretary LAHOOD. We wanted to get their attention and tell them we are taking these safety issues seriously and they need to take them seriously. And immediately upon return of our NHTSA acting administrator, they really stepped up and I think took our word on this.

Mr. DINGELL. Why did you have to do this, Mr. Secretary?

Secretary LAHOOD. Well, I think they were a little safety deaf.

Mr. DINGELL. Were they complying?

Secretary LAHOOD. I think that they were a little safety deaf.

Mr. DINGELL. Pardon?

Secretary LAHOOD. I think they were safety deaf, and we wanted to create some hearing devices for them, so we took a big megaphone with us and we got their attention.

Mr. DINGELL. So you're telling me that you felt it necessary to do this because of the safety of the American driving public, is that right?

Secretary LAHOOD. That is correct.

Mr. DINGELL. Have you had to do that before?

Secretary LAHOOD. Not with Toyota.

Mr. DINGELL. With anybody else?

Secretary LAHOOD. Not that I know of.

Mr. DINGELL. So this is essentially unique.

Secretary LAHOOD. I will make sure I get that accurate for the record, but I'm not aware of it.

Mr. DINGELL. OK. Now, Mr. Secretary, are the reporting requirements for early warning of possible vehicle safety defects different in Japan than in the United States?

Secretary LAHOOD. I will get back to you on the record for that.

Mr. DINGELL. On the record. Very well.

Mr. Secretary, are the Japanese requirements in this regard more or less stringent than American requirements?

Secretary LAHOOD. I will let you know.

Mr. DINGELL. All right. I assume that will be for the record.

Secretary LAHOOD. On the record, yes, sir.

Mr. DINGELL. Mr. Secretary, if the Japanese requirements are less stringent, is it your experience that this affects the manner in which Toyota evaluates potential defects in its vehicles and influences what information a company provides to U.S. regulators?

Secretary LAHOOD. I will put that on the record, sir.

Mr. DINGELL. Very well.

Now, Mr. Secretary, you—I don't know whether you heard the testimony of Mr. Lentz.

Secretary LAHOOD. I did.

Mr. DINGELL. I found myself concerned. He said the decisions on these questions had to be made in Tokyo, and he couldn't do these decisions. Was that the reason you had to go to Tokyo to talk to the Japanese or, rather, talk to Toyota about the safety questions?

Secretary LAHOOD. Yes, sir.

Mr. DINGELL. Because that was where the decisions were made.

Secretary LAHOOD. That is correct.

Mr. DINGELL. Now is this a problem to you that you don't deal with Toyota the way you have to deal with other automobile makers?

Secretary LAHOOD. I told Chairman Stupak earlier that I think their business model for making decisions needs some adjustment.

Mr. DINGELL. Well, but the adjustment has to be because of your problems in dealing with them. Instead of getting the decision made here in the United States, you have got to trot over there to Tokyo to have the decision made. That doesn't seem to me that we're enforcing—we're able to enforce the laws speedily and efficiently as is necessary for the safety of the American driving public. Is that right?

Secretary LAHOOD. I also told the chairman that I'm going to be meeting with Mr. Toyoda when he is here in America and I hope to talk with him about some of these issues.

Mr. DINGELL. OK. Now the Governors of four States sent a letter that I find most distressing. Because if this government is going to use ownership in automobiles to confer benefits or disadvantage on anybody, I want to know about it. Is there any truth in the assumptions that these Governors are making that in some way or another the politics or ownership of General Motors or Chrysler is in any way related to the actions that are now being taken by your Department against Toyota?

Secretary LAHOOD. I have talked to three of those four Governors, and I told them that that letter was not accurate. Our investigation of any car company is not based on who they are. The

idea that we would not take seriously complaints from people who drive Toyotas belies belief, and the idea that we would do it because our government owns 60 percent of GM is baloney, and I told three of the four Governors that.

Mr. DINGELL. You might tell the fourth.

Secretary LAHOOD. Well, I will.

Mr. DINGELL. Mr. Secretary, you are familiar with event data recorders? I believe these are useful to NHTSA, are they not?

Secretary LAHOOD. Yes.

Mr. DINGELL. Have you looked at all the EDRs in the Toyota vehicles that have been recalled?

Secretary LAHOOD. We have not, but we, again, are going to relook at them.

Mr. DINGELL. Some of them do not carry these kind of recorders. Are you able to easily read the recorders of the Toyota vehicles, or do you have some difficulty?

Secretary LAHOOD. What I'd like to do is really look at the statistics on that and get back to you on the record for ones that we could read and ones we had difficulty with.

Mr. DINGELL. Mr. Chairman you have been gracious. Thank you. Thank you, Mr. Secretary. It's good to have you.

Mr. STUPAK. Mr. Rush for questions, please.

Mr. RUSH. Thank you, Mr. Chairman.

Mr. Secretary, it's good to see you here. Your testimony so far has been excellent testimony and even to a certain extent inspiring, considering your hands on the problem and your hands-on approach and your dedication and commitment. I've known you as a Member of this House, and I know that you're very capable and forthright as an individual and you say what you mean and you mean what you say. I am also encouraged by the confirmation of Mr. David Strickland as the head of NHTSA.

That said, I do have some concerns and I have some questions that I want to ask you.

First of all, earlier today—I want to get this out of the way—I received an e-mail from one of my staff members who received an e-mail in turn from one of the executives at the Chicago Defender. You are aware of that newspaper, the Chicago Defender.

This person indicated that his sister-in-law had been killed on December 28 in a Toyota Avalon somewhere near Dallas, Texas. There were three individuals in the car. All four of them were killed. The car flipped over and rested in a pond. The police said that this wasn't a result of a braking issue. So it means that something was wrong electronically. So my question and my request is that you look into that. I will get you all the pertinent information that I have and——

Secretary LAHOOD. We will look at it. We will get the information from you, and we will look at it.

Mr. RUSH. That said, Toyota consumers have witnessed a significant decline in their resale values. That means that there is a possibility and a probability that Toyota consumers, the owners of these vehicles, will experience a sharp increase in their insurance premiums for owning these vehicles. Are you concerned about that?

Secretary LAHOOD. I haven't heard about that, no.

Mr. RUSH. If in fact that does become a reality, especially in this time of economic hardship, I think we ought to be proactive in trying to offset that in some kind of way.

Secretary LAHOOD. OK.

Mr. RUSH. The members of this committee raised several areas of concern in regard to NHTSA's response to certain unintended acceleration, and that was explained by resource constraints within the agency. As the chairman said, the subcommittee that I chair will begin to hear and begin to become very active on NHTSA reauthorization. NHTSA's budget for operations and research has been stagnant for the last 10 years. Are you aware of that?

Secretary LAHOOD. Yes.

Mr. RUSH. As cars become more reliant on computers to operate, NHTSA has not kept up and doesn't have sufficient expertise in electronics to judge the safety of new electronic automobile technology. On at least five occasions NHTSA Office of Defects Investigations cited resource constraints as a reason for the defect petition filed by an individual who experienced sudden unintended acceleration. The question is, does NHTSA have the resources it needs to meet the challenges of its mission?

Secretary LAHOOD. I hope that you all will be pleased to hear that in President Obama's budget for the Department of Transportation there will be 66 new positions at NHTSA. That is what the President is proposing. We have 125 engineers, and some of them are electrical engineers. The idea that we don't have the experts to do the work is not quite accurate. We do have electrical engineers. We have 125 engineers. And the President has requested in his budget request to all of you 66 new positions at NHTSA. So we are moving away from stagnation.

Mr. RUSH. Well, I believe in you as a Secretary and I believe in Mr. Strickland. So we will be working hand in hand with you to make sure——

Secretary LAHOOD. I look forward to that.

Mr. RUSH. —that we move NHTSA forward and we address these problems.

You have only been there a year, but I'm really mindful and something that's important to me is for departments and employees of these departments and the departments themselves having a regulatory role with these agencies or these manufacturers and these businesses and corporations that they have to oversee. I hope that you will be able to build a firewall that is clear, that there can be no regulatory roadblock between the agencies that you have to oversee.

Secretary LAHOOD. I look forward to working with you, sir.

Mr. RUSH. Thank you.

I yield back.

Mr. STUPAK. Mr. Secretary, just one thing. Your staff told us you have no electrical engineers at NHTSA.

Secretary LAHOOD. I'm sorry?

Mr. STUPAK. You have no electrical engineers.

Secretary LAHOOD. We have electrical engineers.

Mr. STUPAK. At NHTSA.

Secretary LAHOOD. Yes, sir.

Mr. STUPAK. That is contrary to what they told this committee and committee staff during the investigation. They said they have engineers who have taken some classes, but——

Secretary LAHOOD. We have 125 engineers, and we have electrical engineers as a part of the 125. I'm sworn to tell the truth here, Mr. Chairman.

Mr. STUPAK. I know.

Secretary LAHOOD. I wouldn't be lying about engineers. If I'm going to lie, it's not going to be about engineers.

Mr. STUPAK. Are any of these electrical engineers in the Office of Defect Investigations?

Secretary LAHOOD. They work for NHTSA, and their responsibilities are to use their expertise in this area.

Mr. STUPAK. So ODI, Office of Defect Investigation, can tap other parts of NHTSA.

Secretary LAHOOD. That is correct. We use their expertise for this.

Mr. STUPAK. That is amazing the staff didn't know you had all that expertise a week ago.

Mr. Markey for questions.

Mr. MARKEY. Thank you, Mr. Chairman, very much.

Welcome back, Ray.

Secretary LAHOOD. Thank you, sir.

Mr. MARKEY. Thank you for your work at the Department of Transportation.

Secretary LAHOOD. Thank you.

Mr. MARKEY. The impression that I think we've all been left with here today is that Toyota was aggregating all this information in Tokyo, but they weren't sharing it with their dealers, their employees, the people that ran different countries. And so we are at an inflection point here where obviously we have to change this system. We have to give you more power, and we have to just make sure this does not occur in the future. So I'd just like to walk through a few things and get your response, because I think it will help us to flesh out the authorities you will need and the things that we have to put in place to make sure we don't see a recurrence.

So it turns out that Toyota recalled a Lexus in the U.K. in 2000 because of a floor mat problem that was identical to that involved in the more recent recalls here in the United States. It's my understanding that the Department of Transportation was never informed of that recall.

In 2003, the Department turned down a consumer protection petition filed by an individual from Braintree, Massachusetts, alleging sudden acceleration problems involving his '99 Lexus, saying that the Department had no reason to think there were excessive problems with the Lexus based on what it knew at the time. It wasn't getting the information from Toyota. So it was not in a situation to see the entire situation.

Do you think the Department might have reached a different conclusion had it known about the 2000 U.K. Lexus recall involving the floor mats and trapping accelerator pedals?

Secretary LAHOOD. Well, I don't mean to be venturing a guess, Mr. Markey. I would assume that we would have, but that is a guess.

Mr. MARKEY. The law doesn't require automakers to report on foreign safety problems that it might have had that do not result in an actual recall, but we have learned recently that one of Toyota's tactics when dealing with safety regulators is to use lobbyists to try to limit the scope of recalls or to prevent them from occurring at all. Do you think that requiring automakers to more broadly report safety problems that they have encountered in other countries could help you do your job?

Secretary LAHOOD. Yes.

Mr. MARKEY. During today's hearing, Toyota claimed to be just beginning to examine the possibility that there are problems with its vehicles' electronics, while an outside academic said he proved that real-world circumstances existed under which the software that is supposed to automatically turn cars off if the throttle electronics fail does not work. We have also learned that Toyota had evidently validated that result. Do you think it would be inaccurate to assert that Toyota has identified and proposed remedies for all of the sudden acceleration problems that have been documented for its vehicles?

Secretary LAHOOD. We are going to do a complete, comprehensive, down-in-the-weeds review of the electronics. We will take information that was presented to your committee today. We will look at all the data. We will look at all the information. We will not rest until we finally find out if electronics are a part of this problem.

Mr. MARKEY. Can I ask, do you think that you need expanded authority to enable you to more easily conduct mandatory recalls? Do you need more authority?

Secretary LAHOOD. No, sir, not really. We do these investigations. We meet with auto companies. If they are not willing to do the recall voluntarily, we have the authority to do it.

Mr. MARKEY. But you need the information.

Secretary LAHOOD. We have to have the information. If we have missed the target on the electronics, we will correct that. We're going to do that. We're going to have a complete review.

Mr. MARKEY. The early warning database that consists of reports provided by auto manufacturers to the Department—and these reports are generally kept secret unless the Department opens up an investigation—what do you think about the public in terms of them providing—being provided with more information regarding potential safety defects that automakers tell the Department about even before an investigation is opened or a recall is announced?

Secretary LAHOOD. We are for transparency. The more information we can give the public, the better.

Mr. MARKEY. Do you need authority to do that? Do we have to change any——

Secretary LAHOOD. I don't know for sure, Mr. Markey. I will get back to you on that.

Mr. MARKEY. OK. That would be helpful. Because we want to be as helpful to you as we can be. We think that you're clearly, in my opinion, a great Secretary of Transportation.

Secretary LAHOOD. Thank you.

Mr. MARKEY. So we want to work with you to accomplish the goals while you're in the agency.

Secretary LAHOOD. I appreciate that. Thank you.

Mr. STUPAK. Ms. DeGette for questions, please.

Ms. DEGETTE. I will add my welcome, Mr. Secretary, and associate myself with Mr. Markey's last remarks, maybe not his first—not all of his remarks.

I just have a couple of questions for you. The first one, I think I know the answer to this. The New York Times has reported that its officials were frustrated with Toyota's slow response while conducting its investigation into acceleration issues. From your previous testimony today I would assume that you agree with that assessment, that Toyota was often slow to respond to requests from your agency, as far as you know.

Secretary LAHOOD. Yes. We have had issues with them, and that is the reason Ron Medford, our then acting-NHTSA administrator, went to Japan. Ron came to me and said, look, I don't think they're listening to us. I need to go to Japan. I said, leave tonight.

Ms. DEGETTE. When was that?

Secretary LAHOOD. It was late last year.

Ms. DEGETTE. From your sense from talking to Ron and others in the agency, was this a pattern with Toyota even before——

Secretary LAHOOD. What I said earlier is Toyota has some very good people in North America, very professional people. They know what they're doing. But I'm not sure that they were able to really communicate that to the folks in Tokyo, and that is the reason Ron felt he had to go there. I'm not going to trash the people in North America at Toyota. They are good people. They are professional people. And I told Mr. Toyoda when I talked to him, I said, safety is number one. You need to take this seriously. And I encouraged him to really do that. I think they've gotten that message.

Ms. DEGETTE. I think it's pretty clear you gave them that message.

NHTSA conducted six investigations into Toyota safety problems since 2003, so this didn't just start last year. This was ongoing since 2003. So my question is, do you know why, since these frustrations were happening at the agency since 2003, that NHTSA didn't use its subpoena power once in all those years of investigation?

Secretary LAHOOD. Well, we have other authority other than subpoena power, and we've used it from time to time. We have other enforcement mechanisms.

As I said at the top in my testimony, I'm going to be forward looking here. I've been in this job a little over a year. If you want me to go back and account for what happened in '04, I will do that.

Ms. DEGETTE. No, I don't. But what I do want to ask you—so, number one, you don't know why they didn't do that before——

Secretary LAHOOD. I don't personally know.

Ms. DEGETTE. Number two, do you reserve the right to use the subpoena power going forward if you don't get adequate response?

Secretary LAHOOD. Absolutely. Totally.

Ms. DEGETTE. My second and last question is, following up on the questions Mr. Rush and also Mr. Stupak were asking about the

NHTSA budget, you said that there are 66 new positions in the administration's budget——

Secretary LAHOOD. Correct.

Ms. DEGETTE. —within NHTSA. But at the same time, NHTSA's fiscal year 2011 budget for the vehicle operations and research side of the agency is about even. So we are wondering where you're going to fund those extra positions and will they be able to work in this particular part of the agency.

Secretary LAHOOD. If the Congress approves our budget with additional staff, we will take those resources and put them where they are needed.

Ms. DEGETTE. So you think that you will be able to hire these 66 new positions within that flat budget.

Secretary LAHOOD. I think if we get 66 new positions and you provide the money for it, we will take those people and put them where they are needed. If they are needed on looking into electronics, we will do that. If they are needed in other areas, we will do that.

Ms. DEGETTE. So your view is that the 66 new people aren't necessarily looking into electronics. They are just——

Secretary LAHOOD. They are going to be a human resource that we are going to use where we need them, where the problems are.

Ms. DEGETTE. So let's say you do need them in electronics—because it seems like from past years, again, not speaking about the last year when you've been Secretary, but from past years this has been a deficiency in the agency. If you put them over there, where are you going to take it from in the agency's current enforcement?

Secretary LAHOOD. Well, I don't know the specifics on that. I'd be happy to get back to you. We will keep our fingers crossed that you provide us the additional 66.

Ms. DEGETTE. See, I will just tell you, Mr. Secretary, what we are concerned about, not just with NHTSA but a lot of the other consumer agencies, is over the last 8 to 10 years these agencies have been starved of resources. And we are concerned that if you take 66 new positions, which might be authorized but if there's no additional funding for the agency that we are going to stint on other places where we are already short on enforcement.

Secretary LAHOOD. I would assume if we get the authorization, we are going to get the money to pay for them. That would be our goal.

Ms. DEGETTE. And that would be in addition to your fiscal 2011 budget?

Secretary LAHOOD. Our 2011 would be the 66 additional people, plus the money to pay for them.

Ms. DEGETTE. OK. Because the request we know about is pretty much flat.

Secretary LAHOOD. Our goal will be to——

Ms. DEGETTE. Your staff has some advice here.

Secretary LAHOOD. Let me just see what it says here. It says, increase in salary count. Look, if you authorize 66, I will work with our friends on the Appropriations Committee to find the money.

Ms. DEGETTE. Thank you.

Mr. STUPAK. Mrs. Christensen senior for questions, please.

Mrs. CHRISTENSEN. Thank you.

Welcome, Secretary LaHood. It's always good to have you here. Having worked with you for quite a few years and knowing your integrity, having witnessed your commitment and passion for safety, I have confidence that what needs to be done at NHTSA will get done.

Some of the questions about what authorities you need have already been asked, so let me just ask this one question.

After the Firestone Ford Explorer rollover problem I read that Congress introduced the Passive TREAD Act, which required NHTSA to create an early warning system to gather and analyze more information on auto safety to reduce defects sooner. In a 2004 report—and I realize this is before you came—but in that report from the Department of Transportation Inspector General it was stated that the cost estimates for the project were way above what had been anticipated and that the computer system that existed at that time did not have the advanced analytical capabilities that were envisioned by the law. So it didn't have the money, but they didn't have the capability of creating or having that early warning system to gather and analyze the information. Do you know if that problem has been corrected since the Inspector General report of 2004?

Secretary LAHOOD. It has been. And I can tell you this. When we got into this Toyota thing—I have been going over this and going over this. I think we have some outstanding people. They work very hard. We get 30,000 complaints a year. We look at what other organizations are saying and doing. We talk to car companies. And we take every one seriously. We don't set any aside. And when we really see a curve and see something that really catches us, we begin to look at that very carefully. And so I think we have a good system in place. Hopefully, we get a few more resources in terms of people. But I think the system works very well. If somebody has a complaint, we take it seriously, if it's an individual driver or a company or an organization. And our people look at every one.

Ms. CHRISTENSEN. Thank you, Mr. Secretary.

I yield back my time.

Mr. STUPAK. Thank you.

Ms. Sutton for questions, please.

Ms. SUTTON. Thank you, Mr. Chairman; and thank you, Mr. Secretary, for being here and for your work at the Department.

A couple of things. The black boxes that we have heard about, I'm just trying to get clarification on that. Does NHTSA have access to the data that was contained in black boxes that might have been—might be in Tokyo? As I understand it, Toyota has access to this information, but can we access it?

Secretary LAHOOD. I don't know the answer to that. So it's difficult for us. They only have one reader to read these devices, and it's very difficult to get the information.

Ms. SUTTON. So finding ways to get relevant information and enforcing safety concerns here is something that——

Secretary LAHOOD. It is. I do think all of this has been a big wake-up call for Toyota. I think you will find that when Mr. Toyoda comes on Capitol Hill tomorrow, when he makes some vis-

its to some folks—I mean, I think they get it now. They need to be more attuned and sensitive to these things.

Ms. SUTTON. Thank you, Mr. Secretary.

Also, just because we have the opportunity to make sure the record is clear here on certain things, I reviewed the report issued by NHTSA on the CARS program. I was happy to see that positive jobs impacts of at least 60,000 jobs.

But I also want to make sure that people understand, because I think there's been some effort to confuse the record, about the way—we have talked a lot about resources and what you need to do to accomplish the safety functions that fall within NHTSA responsibility. We want to make sure that you always have what you need. And if you need more than you have now, we want to make sure you have got it.

But, just to clarify, it's my understanding that at NHTSA—I mean, which also, of course, has responsibility over fuel economy standards, which is why Cash for Clunkers was also part of NHTSA's purview, that the people who deal with fuel economy and the people who deal with the safety functions under NHTSA are two different sets of people. Is that correct?

Secretary LAHOOD. It is correct. But I will say this, Congresswoman—and you know this—in the first 4 days of that program, which was your stepchild, or however you want to characterize it—it was your idea—250,000 cars were sold. It was a wildly popular program. And I'm not going to sit here and tell you we weren't overwhelmed. When you sell 250,000 cars and try to get the money out the door to dealers, it became a very serious issue for us. We were trying to incorporate a lot of resources, including our FAA friends out in Oklahoma City, who do a lot of good work but they also know how to process paper. We used their expertise. We hired people from the outside to come in. But I want people to know there never for one instance was safety ever compromised as a result of the CARS program, not for one second. I wouldn't let that happen.

Ms. SUTTON. Mr. Secretary, the other issue, of course, is that I wouldn't let that happen, either. The reality is that we put $50 million in administrative costs into the legislation, so that we actually gave resources when we gave work——

Secretary LAHOOD. That is correct.

Ms. SUTTON [continuing]. To NHTSA. And that is an extraordinarily important point not to be lost because it's easily swept under the rug by those who might want to discredit what was clearly, as you point out, wildly popular.

Secretary LAHOOD. It was a lifeline to the automobile industry. No one could have ever sold 7 or 800,000 cars in less than 30 days. It was a lifeline to car salesmen, to car dealers, to the loan companies, to the credit unions that made the loans, to the local governments that got the sales tax. The spin-off on that was incredible. It was a lot more than $3 billion.

Ms. SUTTON. Thank you. Thank you very much, and I appreciate that clarification.

Secretary LAHOOD. Thank you.

Mr. STUPAK. The gentlelady yields back?

Ms. SUTTON. I yield back.

Mr. STUPAK. Ms. Schakowsky for questions, please.

Ms. SCHAKOWSKY. Hi, Ray. Thank you for being here and answering all our questions——

Secretary LAHOOD. Thank you.

Ms. SCHAKOWSKY [continuing]. And being here at this late hour.

I have been meeting, as I think other members have, with some of the Toyota dealers today, who—this couldn't have happened at a worse time in many ways with the downturn in the economy, and they are very worried about their futures, and we have to be, too, because there's a lot of jobs involved in dealerships and the manufacture of cars. They said that the sale of Toyota is down like 50 percent right now, which is understandable.

One of the other things that they feel is that there has been disproportionate focus on this particular situation of Toyota, and they pointed out that there have been over the last year some 143 or something like that recalls, some related to safety of other automobile manufacturers. So what I wanted to ask you is how would you rate Toyota's performance in dealing with NHTSA safety issues compared to other automakers? Do we have a particular problem here?

Secretary LAHOOD. The vast majority of recalls are not on Toyotas. They are on other car manufactures.

Ms. SCHAKOWSKY. That is what they were saying.

Secretary LAHOOD. It is. People know what that is. We put it out there. We are not trying to hide that.

Ms. SCHAKOWSKY. They weren't blaming.

Secretary LAHOOD. The reason that people are focusing on this now is because of the horrific accident that occurred in San Diego where these people lost their lives, and that really highlighted the unfortunate circumstances by which that happened. And you all want to get to the bottom of it, and so do we.

I know there are people on this committee all day that have been talking about the electronics. We are going to get in the weeds on that. We feel an obligation to do that. If we've overlooked it, I guarantee it won't happen on my watch. We are going to look into it.

The idea that we are picking on Toyota is just not accurate. Look at the statistics. Over the last 3 years, 23 million recalls of automobiles as a result of our investigations. And the vast majority were not Toyota.

Ms. SCHAKOWSKY. Right. I think they were actually mostly just worried about the publicity that had been around this.

Secretary LAHOOD. Look, Congresswoman, if you and I were in charge of publicity, there would be a lot different stories written about everything.

Ms. SCHAKOWSKY. This is true. Some of us have the same problems.

One of the things that Toyota is doing is installing in some of the recalled cars, not all of them, a software fix that makes sure that the brakes override the accelerator. This seems like a really good idea. Is there some way that this could be required as a standard safety feature?

Secretary LAHOOD. I heard Mr. Lentz say they were doing it in the majority of his models as he was sitting here today. And we have not heard that before. It's something I think we should look

into. If that is a way to override an electrical problem or a sticky pedal or a floor mat pedal that someone hasn't taken care of, any way that we can save lives and save injuries and correct something that is wrong, I think we should look at it.

Ms. SCHAKOWSKY. It seems to me that that would make a whole lot of sense now in this computer and electronic era to make sure——

Secretary LAHOOD. Yes.

Ms. SCHAKOWSKY. I have no other questions. Thank you.

Mr. STUPAK. That concludes questions by members of the subcommittee.

We still have members from the full committee here. Mr. Shimkus, if you have any questions.

Mr. SHIMKUS. No questions, just a statement if I may, Mr. Chairman.

First of all, Dr. Gilbert comes out of SIU Carbondale. I got to listen to most of his testimony in the office, and I got to spend some time with him this afternoon. So I want to place on the record we are very proud of him for the work he has done. And I know my good friend and now former colleague, Secretary LaHood, would appreciate the Illinois connection of that.

I just want to, on the record, praise a good friend and a mentor of mine. As you know, I have been a little combative in my 3 years, last 3 years especially, and I think some of that style I learned from the sitting Secretary. There's something to be said about telling it straight and forcefully. And that's always been Ray's style. On the record, I appreciate your friendship and support over the years, and I know you're working in the best interest of the country. So thank you for what you do.

Secretary LAHOOD. Thank you for those very good words, kind words, and we are going to look at his research. We are going to look at everything, his testimony today. But we want to look at the documents and see what he's done. Hopefully, it will be helpful to us.

Mr. SHIMKUS. Welcome to the committee.

Secretary LAHOOD. Thank you.

Mr. STUPAK. Mr. Gonzalez, questions, please.

Mr. GONZALEZ. Thank you very much.

The first thing, Mr. Chairman, can I ask unanimous consent that we all agree with Mr. Shimkus' description of himself, that he is combative?

Mr. Secretary, I've said it before. I will say it again. We miss you. We are happy to have you, as great a job as you're doing. Too bad we don't have two of you.

A couple of things. One, I think you said there were 250,000 cars sold in the Cash for Clunkers. I think that may have been the first few days. There were 750,000 cars sold. I know I had some of my dealers complaining that the money wasn't being paid quickly enough. The alternative would be for the cars to remain on their lots. When I reminded of that, they were happy to wait a couple of days.

Let me start off with a couple of observations. First of all, in your testimony, written testimony—I'm going to read from it. NHTSA does not contend that the two recalls will fully resolve all concerns

about unintended acceleration in Toyota vehicles. However, with one exception, NHTSA has not been able to establish a vehicle base cause for unintended acceleration events in Toyota vehicles not covered by those two recalls. The exception was the recall of the model year 2004 Sienna vans in 2009 due to a defective trim panel.

Some consumers and others believe that Toyota's electronic throttle control, ETC, systems and perhaps such systems in other manufacturers' vehicles are susceptible to electromagnetic interference, EMI, that can theoretically cause unintended acceleration by resulting in incorrect signals to the engine. To be absolutely sure that the agency is aware of all potential defects, NHTSA is conducting a review of the general subject of possible EMI effects on ETC systems.

Now you have assured us that that is ongoing and you're going to be very aggressive about it, which we would all stand here and tell you how can we help you with it. The problem was, and we have had members make reference to it, was that members of NHTSA were here, and this is from a letter—actually, it's a body of a letter that has been forwarded to you, but it's dated February 22, so I doubt if you've even had a chance to look at it.

As the agency responsible for ensuring that the vehicles on the road are safe, it is essential that NHTSA have ample expertise to test and analyze the electronic systems and to evaluate the sufficiency of tests and the analysis of the automobile and automakers' performance.

It appears, however that, NHTSA lacks the expertise, hampering the ability of the Office of Defects Investigation, ODI, to examine possible electronic defects in vehicles. In the briefing on February 18, officials told the committee staff that the agency has no electrical engineers or software engineers on staff. Now that is not accurate, is that correct?

Secretary LAHOOD. We have two electrical engineers. We have 125 engineers. We have two electrical engineers, and we are about ready to hire another one.

And the third thing I would say, Mr. Gonzalez, is that when we need outside expertise, we use it. We do. We are not bashful about doing it. If we don't feel we have the expertise, we will go out and find it.

Mr. GONZALEZ. I think that is an important point. The reason for that we have been talking about maybe expanding your authority, and I don't think you're going to be bashful about coming here and saying, legislatively speaking, you need a fix. But we also want to be very receptive to the expanded resources that you may require, and there's not going to be anybody on either side of this aisle that's not going to give you whatever you need to get to the bottom of this.

It is good to see you here and receive the assurance that you're aggressively pursuing this. I will end with one question. Is Toyota cooperating with your Department?

Secretary LAHOOD. A hundred percent now.

Mr. GONZALEZ. Thank you very much. I yield back.

Mr. STUPAK. A hundred percent now. They weren't always cooperating with you?

Secretary LAHOOD. I don't know that we would have had to go to Japan. I don't know if I would have had to pick up the phone and talk to Mr. Toyoda.

Mr. STUPAK. Let me ask you this. You indicated that you could always—NHTSA can get outside experts if they need help in an area. Do you know the last time ODI, Office of Defect Investigations, ever hired outside experts to help them with a problem?

Secretary LAHOOD. I do not. But I will put that on the record for you. I can find out.

Mr. STUPAK. We would appreciate it.

Mr. Burgess, questions?

Mr. BURGESS. Yes. Mr. Secretary, I'm sure you heard the testimony—the compelling testimony of the Smiths, who were here.

Secretary LAHOOD. Of course.

Mr. BURGESS. The uncommanded acceleration in her vehicle. They voiced a lot of frustration over getting anyone at Toyota to take them seriously. They also voiced some frustration in getting the National Highway Traffic Safety Administration to listen to them and take them seriously. I got the impression that they were still waiting for a response from NHTSA. I would appreciate it if you would look into that.

Secretary LAHOOD. We will be in touch with them.

Mr. BURGESS. I heard Mr. Lentz say that he didn't know what had happened to the vehicle, but he was going to make an effort to find it. I would just suggest that maybe NHTSA ought to take the same trajectory. I think you would be very interested to know if some of the things that Professor Gilbert brought up today actually can exist in a real-world situation, and if that car was the laboratory that created that, thank goodness no one died in the experiment, but let's get that data and find out if indeed that what Professor Gilbert produced in the laboratory was what Mrs. Smith encountered when she drove her car.

Secretary LAHOOD. We know where the car is. We have talked to the owner of the car. We hope to be able to explore that.

Mr. STUPAK. That concludes all the questions of the members.

Mr. Secretary, thank you. Thank you for your patience today. We look forward to follow-up questions that we will be sending you.

I want to thank all of our witnesses for coming.

The committee rules provide members have 10 days to submit additional questions for the record.

I ask unanimous consent that four documents—the Exponent letter dated February 23, 2010, be entered in the record; the report of Professor Michael Pecht be entered in the record; Mr. Neal Hanneman's report be entered in the record; and Dr. Gilbert's interim report be entered in the record. Without objection, so ordered.

[The information appears at the conclusion of the hearing.]

Mr. STUPAK. Mr. Burgess asked that Governor Perry's letter to the committee be entered in the record. Without objection, so be it.

[The information was unavailable at the time of printing.]

Mr. STUPAK. That concludes our hearing. The meeting of the subcommittee is adjourned.

[Whereupon, at 6:55 p.m., the subcommittee was adjourned.]

[Material submitted for inclusion in the record follows:]

Exponent

Exponent
149 Commonwealth Drive
Menlo Park, CA 94025

telephone 650-326-9400
facsimile 650-326-8072
www.exponent.com

February 23, 2010

Via FedEx and Facsimile

Mr. Henry A. Waxman, Chairman
Committee on Energy and Commerce
Mr. Bart Stupak, Chairman
Subcommittee on Oversight and Investigations
2125 Rayburn House Office Building
Washington, D.C. 20515-6115

Gentlemen:

We are concerned about the Committee's comment in a letter to Mr. James Lentz, dated February 22, 2010, that Exponent's report "appears to have serious flaws." The two individuals referenced, Professor Michael Pecht and Mr. Neil Hanneman, have not identified any flaws in our work, but rather identified other areas of investigation to be pursued, some of which were already underway.

When Toyota released Exponent's report they described it as an interim report. We specifically state, both in the Executive Summary and in the Conclusions of our report, that "This report summarizes some of the testing that has been performed to date. Exponent's testing and analysis is ongoing."

It is important to note that at this stage of our work we neither claim to have looked at all the issues, nor to have opined on the cause of the incidents of unintended acceleration that have been reported. We agree that further work needs to be performed before we reach such opinions and further work is underway.

We released our interim report at Toyota's request because Toyota understood that the Committee was interested in the status of our ongoing work. We have made our staff available to the Committee staff to answer questions, and would be pleased to continue to do so. Also, should the Committee or its staff wish to visit our offices or test facilities in order to assist them in the review of this matter, we would be pleased to host such a meeting.

On the other hand, if the Committee would prefer that we not release any further progress reports until our investigation is complete, we will respond accordingly.

It is counter-productive for us to release progress reports if we are to be criticized because they have not addressed all the issues.

Sincerely,

Paul R. Johnston, Ph.D.
President and CEO

cc: The Honorable Joe Barton, Ranking Member
Committee on Energy and Commerce

The Honorable Greg Walden, Ranking Member
Subcommittee on Oversight and Investigations

Mr. James E. Lentz
President and Chief Operating Officer
Toyota Motor Sales

Toyota Sudden Unintended Acceleration

February 5, 2010

Sean Kane
Ellen Liberman
Tony DiViesti
Felix Click

Safety Research & Strategies, Inc.
340 Anawan Street / Ste. 200
Rehoboth, MA 02769
Ph. 508-252-2333, Fax 508-252-3137
www.safetyresearch.net

Acknowledgements

The report was written and its research conducted by Safety Research & Strategies, Inc. on behalf of consumers and the injured individuals, families and loved ones of the fatal victims of Toyota Sudden Unintended Acceleration.

This report is the sole property of Safety Research & Strategies and its contents reflect the work and the opinions of SRS. This report was not funded by attorneys, consumers, advocacy groups, or experts interested in this subject matter. It was not produced for litigation against Toyota Motor Company. We would nonetheless like to acknowledge five attorneys, who sponsored some of our research into Sudden Unintended Acceleration in Toyota vehicles: Donald Slavik of Habush, Habush & Rottier; Edgar F. "Hike" Heiskell III of Bailey & Glasser, LLP; John H. Gomez of the Gomez Law Firm; R. Graham Esdale Jr. of Beasley, Allen, Methvin, Portis & Miles PC; and Terrence McCartney of Rheingold, Valet, Rheingold, Shkolnik & McCartney LLP. We also acknowledge Randy and Alice Whitfield of Quality Control Systems Corp. for their insights and continued efforts in defect surveillance and government transparency.

We undertook this effort solely to help consumers who have suffered incalculable personal and economic losses and advance our public safety mission. It is our intention, in publishing this report, to provide a comprehensive accounting of the public record surrounding this complex problem. We hope it will encourage Toyota to take swift action and produce policy changes to prevent future tragedies.

This report was a collaboration among the entire SRS staff: Sean E. Kane; Ellen C. Liberman; Felix Click; Tony DiViesti; Melanie MacDonald; Lauri Stevenson; Ann Boudreau; Sharon Mitchell; Marilyn Charest; Ryan Gousie and Sarah Madsen.

Table of Contents

Executive Summary 1

Introduction 3

Owners Complain 5

- The Data 5
- Early Warning Reporting Data 12

NHTSA Investigates 14

- Aborted Efforts to Look at the Early-Model Camry 17
- The Lexus Investigations 17
- The Tacoma Investigation 24
- The Sienna Van Investigation: No Data, Bigger Problem 25

A Case of Historical Bias? A Brief History of SUA 26

Possible Causes of SUA 30

- Pedal Entrapment and Pedal Misapplication 30
- Electromagnetic Interference and Electronic Problems 31
- Cracked Throttle Body Shafts 33

Toyota Response: Illogical and Inconsistent 34

- The ETCS-i 34
- Toyota's Notice of the Emerging SUA Problem and the Effort to Shut it Down 36
- The Recalls 38
- Do the Recalls Address Root Causes of SUA? 40
- Sticky Pedals 41

A Confused Public as Toyota Shifts the Blame 47

Conclusion 50

Table of Appendices

Appendix A: Unintended Acceleration Incidents Reported 1999-January 19, 2010 Involving Vehicles Outside of the Recall Populations

Appendix B: A Sampling of Incidents of Unintended Acceleration in Recalled Vehicles not Explained by Pedal and Mat Failures

Appendix C: Toyota Vehicles with ETCS-i

Appendix D: Consumer complaints to NHTSA 2007 – 2008 MY Lexus ES350 unintended acceleration incidents occurring Jan. 2009 – Jan. 2010

Appendix E: Consumer complaints to NHTSA of unintended acceleration in Lexus IS models

Toyota Sudden Unintended Acceleration

Executive Summary

This report examines the complexities and inconsistencies within the public record on Sudden Unintended Acceleration (SUA) incidents involving Toyota vehicles. It concludes that neither Toyota nor the National Highway Traffic Safety Administration (NHTSA) has identified all of the causes of SUA in Toyota and Lexus model vehicles, nor has the automaker implemented remedies that address the types of complaints consumers are reporting.

Since 1999, at least 2,262 Toyota and Lexus owners have reported to the National Highway Traffic Safety Administration, the media, the courts and to Safety Research & Strategies that their vehicles have accelerated suddenly and unexpectedly in a variety of scenarios. These incidents have resulted in 815 crashes, 341 injuries and, 19 deaths potentially related to sudden unintended acceleration.

Toyota's SUA problems span many years, makes and models. The scenarios in which they occur show different patterns of problems. Like many wide-spread problems, rarely is there a single root-cause. Toyota's recalls to date and continuing consumer complaints show this.

In 2003, the National Highway Traffic Safety Administration launched the first of eight separate investigations into SUA, beginning in 2003, into this phenomenon in Lexus models and Toyota Camry, Tacoma and Sienna vehicles. The agency never determined a cause for these incidents in five of the investigations; three resulted in determinations that all-weather accessory floor mats or vehicle trim had interfered with the accelerator pedal.

Toyota initially blamed customers for improperly installing accessory floor mats and resisted taking widespread action. In 2005 and 2007, the automaker launched two small recall campaigns. The first corrected an accelerator that could stick in Lexus IS250 vehicles; the second replaced all-weather floor mats in a limited group of 2007 and 2008 Lexus and Camry vehicles. More recently, under growing public pressure, Toyota has initiated much larger recalls to redesign floor mats, shorten the accelerator pedal, and in some vehicles, install a brake override feature. The automaker has also launched a second recall for sticky accelerator pedals.

Toyota has been slow to accept its responsibility in creating this safety hazard. That floor mats could so easily entrap the accelerator pedal suggests design flaws that could encompass the mat, the floor arrangement on the driver's side, the pedal mechanism itself, the pedal placement or any combination of these factors.

An accelerator pedal that is slow to return to idle requires repair, but does not cause Sudden Unintended Acceleration.

The agency's investigations have been too brief and cursory to find other causes. Its decisions to open or close probes, based on shifting statistical bases, have contributed to a continuing safety issue. That may be the result of a lack of electronic expertise, the resources to fully investigate the electronic causes, or a bias against non-mechanical causes, rooted in the 25-year, and frequently controversial, history of SUA.

Nonetheless, there is ample evidence to suggest that neither Toyota nor NHTSA have identified all of the causes of SUA in Toyota vehicles or all of the vehicles plagued by this problem. Of the 2,262 complaints, about half are from drivers of vehicles that haven't been recalled. The complaint data also show that replacing a sticking pedal or the floor mat will not resolve the problem, because:

- Drivers experience SUA when their vehicle is in idle mode.
- Drivers experience SUA when their foot is on the brake.
- Drivers experience SUA when no all-weather accessory floor mats are present or are properly installed.
- Drivers report that the vehicle accelerates while at constant highway speed.

These scenarios don't square with the current theories. Absent a mechanical cause, the automaker and the regulators must look more closely at the vehicle control systems, including the electronic throttle control assembly and the associated sensors. Toyota has consistently argued that its electronic throttle control design and failsafe systems are infallible. Drivers' experiences clearly prove that this is not true. Random, intermittent electronic faults are hard to detect, but they do occur – the electrical contacts, electromagnetic interference, and the programming of the electronic controls are all possible points of breakdown or interruption in an electronic system.

Regardless of the causes of sudden unintended acceleration in Toyota and Lexus vehicles, the automaker's first step should be measures to protect the public. The implementation of a brake-to-idle feature across all model lines and years may be a significant step in that direction. With this feature, the signal to brake would take precedence – even if the throttle were fully open. The brake override allows drivers to regain control of a runaway vehicle.

Sudden Unintended Acceleration is a contentious topic in automotive circles. The debate was born in the 1980s, when angry Audi owners, claiming that their vehicles could suddenly accelerate, were crashing their vehicles with alarming frequency. Audi blamed drivers unfamiliar with its vehicles. Drivers could not be persuaded that they had made an error. Five recalls ensued. Whether you believe that Audi was unfairly maligned or that the regulators failed, the lessons of the past are not necessarily instructive to the problems of the present. The Bowden cable, the linchpin of mechanical throttle designs, is rapidly becoming an obsolete technology. Vehicles are now complicated interfaces where mechanicals systems are controlled by increasingly sophisticated electronics. Any examination of SUA must fully explore the interactions between the two, as well as simpler, easy-to-understand causes. This has not yet been done for the Toyota SUA incidents.

Introduction

On August 28, 2009, California Highway Patrol Officer Mark Saylor, his wife, young daughter and brother-in-law died in a horrific crash, when the 2009 Lexus ES 350 Saylor had been driving, "failed to stop at the end of Highway 125."[1] According to the report filed a month later by NHTSA investigators, Saylor's Lexus, a loaner from Bob Baker Lexus of El Cajon, Calif., "entered the T-intersection and collided with a Ford Explorer. The Lexus continued on past the end of the T-intersection and struck an embankment, at which time it became airborne. The Lexus eventually came to rest in a dry riverbed where it burned for an extended period of time."[2]

Mark Saylor, his wife Cleofe, their 13-year-old daughter, Mahala, and brother-in-law Chris Lastrella were not the first occupants to die in a crash caused by Sudden Unintended Acceleration (SUA) in a Toyota or Lexus vehicle. An estimated 19 occupants have died in Toyota vehicles in which the driver or occupants described a scenario in which their vehicle inexplicably accelerated without their input and could not be stopped. But the moments before the Saylor crash were captured in a frantic and publicly broadcast 911 call from Lastrella, describing panic in a runaway vehicle.

It was a watershed moment in a crisis that had been forming for at least six years, caused by Toyota's neglect and failure to address the root causes, and by the National Highway Traffic Safety Administration's failure to identify any safety-related defect trends despite the steady stream of complaints. Since 2003, NHTSA's Office of Defect Investigations (ODI) has opened eight separate investigations into allegations of Sudden Unintended Acceleration involving Camry, Lexus ES 350, Sienna and Tacoma vehicles – five of which included Lexus vehicles. Most have been very brief, cursory, and closed with no defect finding. The only cause the agency has ever found for Toyota SUA has been pedal interference caused by floor mats, or in the case of the Toyota Sienna, trim interference.

In the past, Toyota had successfully responded by denying that any problem existed – but if pushed, blamed consumers for installing accessory floor mats that could entrap the accelerator pedal and agreed to replace the mats, or post warnings. This remedy had satisfied NHTSA – until the Saylor crash – which put renewed pressure on Toyota and the agency, to, at the very least come up with a much more substantive remedy.

Many could not understand why a highly experienced California Highway Patrol officer couldn't safely bring the vehicle under control and to a stop. After an inspection of the burned vehicle, NHTSA declared that the cause was an unsecured accessory all-weather floor mat entrapped the accelerator pedal. The inspection noted:

---

[1] REPORT: Vehicle and Crash Site Inspection of 2009 Lexus ES-350 ; DP09001; Bill Collins; NHTSA; September 30, 2009

[2] REPORT: Vehicle and Crash Site Inspection of 2009 Lexus ES-350 ; DP09001; Bill Collins; NHTSA; September 30, 2009

> "The mat was not secured by either of the two retaining clips. The right clip was installed into the grommet of the carpeting but not installed into the mat. The left clip was found under the middle of mat but was not clipped to either the carpet or the rubber mat. Removal of the mat was difficult because the bottom edge of the accelerator pedal had melted to the upper right corner of the mat. Further inspection of the mat revealed that while it was a Lexus brand mat, it was not the correct application for the vehicle."[3]

Was that really the cause? (The report is ambiguous – it does not say that the mat was found on top of the pedal, rather the pedal had burned on to the mat. The pedal mechanism was found to be in good shape, with the ability to easily spring back.) If the floor mat was to blame, Toyota is guilty of failing to acknowledge the very serious and real consequences of pedal entrapment for at least two years, since the agency pointed out in a 2007 investigation that drivers could not easily stop a runaway vehicle.[4]

If the floor mat did not confine the pedal, then Toyota and Lexus owners have real cause to worry that their vehicles have an unidentified defect constituting a severe safety hazard.

Over the last eight years, Toyota has ignored many consumers' complaints, even as it quietly issued a number of Technical Service Bulletins to fix problems with its electronic throttles. The Electronic Throttle Control-intelligent (ETCS-i) throttles, first introduced in some models in 1998, were widely applied by the 2002 model year. Since 2005, Toyota has launched six recalls related to accelerator pedals – floor mat replacement was featured in four of these campaigns – although the October 2009 recall included other adjustments to the targeted vehicles. The most recent recalls, in January, were launched to replace sticking accelerator pedals on many late model Toyotas.[5]

Each of Toyota's recalls have focused on mechanical root causes while the company has denied any electronic connection to unintended acceleration.

Like many large-scale defect-related tragedies, there is rarely a singular cause or event at the root of a problem; rather, a number of issues align. Firestone tire/Ford Explorer rollovers that dominated the news at the beginning of the decade were the result of design and manufacturing defects in the tires, combined with an application on a rollover-prone vehicle that was sensitive to tires. In addition, the tire's long wear on the best-selling SUV ensured wide exposure.

There are many parallels between that crisis and Toyota's problems today. It is becoming increasingly apparent that Toyota SUA incidents stem from multiple causes. Complaints have been found across many years, makes and models of Toyota vehicles, under a range of driving conditions. Consumers' descriptions of SUA incidents do not all fit the current

---

[3] [3] REPORT: Vehicle and Crash Site Inspection of 2009 Lexus ES-350 ; DP09001; Bill Collins; NHTSA; September 30, 2009

[4] Closing Resume EA0710; National Highway Traffic Safety Administration; October 11, 2007

[5] Recall 10V017; Toyota Motor Company; January 21, 2010

recall descriptions. Many consumers report sudden full-throttle occurrences when parking at low speeds with the brake applied. Others describe on-highway events in which the vehicle continues to increase in speed without pedal application. In many cases floor mats are secured or simply absent. Further, Toyota dealer and field service representatives' inspections report no physical impairments, such as a "sticky pedal."

NHTSA's failure to respond effectively to these complaints may be affected by the agency's longstanding historical bias against non-mechanical or non-driver error causes of SUA. Although electronic problems within today's increasingly computer-saturated vehicles are well-known within the auto industry, the agency has given this possible cause short shrift. It may also underscore the weaknesses of the Early Warning Reporting (EWR) system, instituted in the wake of the Ford Explorer debacle. EWR data, (in addition to consumer reported complaints) submitted to NHTSA starting in 2003 showed some Toyota and Lexus models exhibiting SUA claim rates that should have drawn closer attention to the problems.

Unraveling the complex mix of the SUA problems will take time. In the meantime, it is imperative that Toyota communicate openly and honestly with its customers and that NHTSA work to support consumers throughout this process. Many Toyota owners remain confused as the company shifts its public position, applies remedies unevenly, and fails to provide a clear, tangible and logical explanation for vehicle problems.

Regardless of the causes of sudden unintended acceleration in Toyota and Lexus vehicles, it is apparent that the automaker's first step should be measures aimed at protecting the public. The implementation of a brake-to-idle feature across all model lines and years may be a significant step in that direction. This design, found in many other manufacturers' vehicles with electronic throttles, will bring the engine to idle if both the brake and the accelerator pedals are applied. A significant number of motorists who experienced frightening SUA events reported that no amount of braking would stop the vehicle once it took off. So far, Toyota has only been willing to add a brake-to-idle feature on some Camry, Avalon and Lexus ES 350, IS 350 and IS 250 models as an "extra measure of confidence." This is inadequate.

Complaints of SUA can be found for all manufacturers. While there may be other standout makes and models, this report is focused on Toyota, an automaker with an SUA complaint problem that appears to be much broader and widespread than in other manufacturers and models.

Owners Complain

The Data

Toyota and Lexus owners have been complaining about sudden unintended acceleration in their vehicles for years. An independent analysis by Safety Research & Strategies (SRS) of complaint data collected by the National Highway Traffic Safety Administration, Toyota submissions to NHTSA investigations, incidents in litigation,

media accounts and accounts from individuals who have contacted SRS shows that since 1999, there have been 2,266 incidents, 819 crashes; 341 injuries and 26 potential deaths. The SRS analysis defined sudden unintended acceleration broadly as any incident in which the complainant reported an engine acceleration that was unintended – regardless of whether the car was in gear. This mirrors the consumer complaints in which drivers have likewise described incidents in which the vehicle surged while in idle mode or moving very slowly or travelling at a high rate of speed.

Table 1. Toyota Unintended Acceleration Incidents Reported from 1999 to Jan. 19, 2010

Total Incidents	**2262**
Crashes	**819**
Injuries	**341**
Deaths	**26**

Table 2. Number of Injuries Resulting from Toyota Unintended Acceleration Incidents Reported 1999- Jan. 19, 2010, by Model

4RUNNER	2
AVALON	13
CAMRY MODELS	131
COROLLA	16
ES MODELS	48
GS MODELS	2
HIGHLANDER MODELS	15
IS MODELS	5
LS MODELS	6
OTHER MODELS	10
PRIUS	13
RAV4	9
RX MODELS	12
SIENNA	20
TACOMA	31
TUNDRA	2
UNKNOWN CAMRY OR ES MODELS	6

Table 3. Number of Potential Deaths Resulting from Toyota Unintended Acceleration Incidents Reported 1999-Jan. 19, 2010, by Model

CAMRY MODELS	12
ES MODELS	5
HIGHLANDER MODELS	1
IS MODELS	1

Figure 1

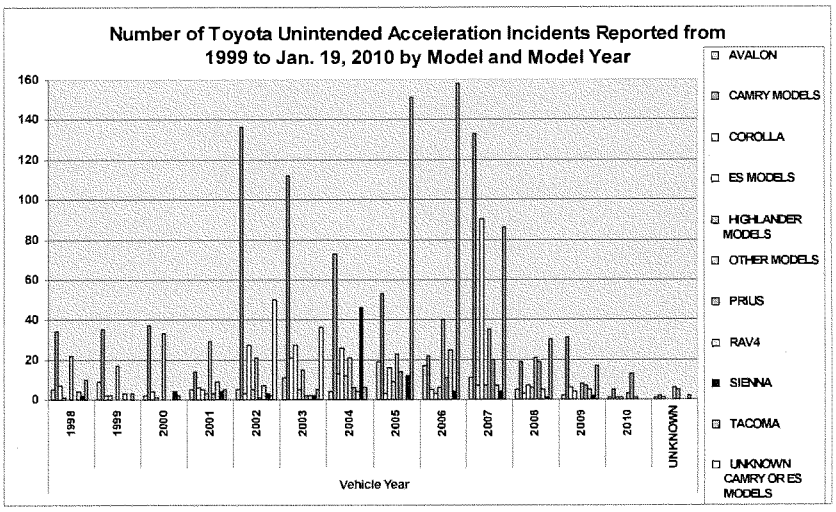

Figure 2

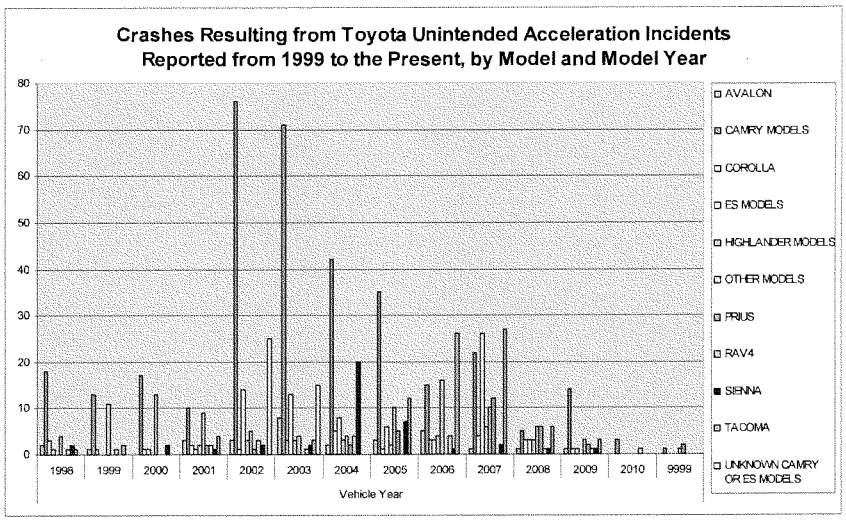

[*Note: In order to improve visibility for the graphs, we have combined vehicle models for which there are fewer than fifty reported incidents across all years with "Other Models" category.*]

It is very important to look at *all* of the available data, particularly in light of Toyota's recent public announcements that it had determined that the problems were confined to unsecured floor mats and sticking accelerator pedals, and that the current recalls would resolve these complaints.

In the past, both Toyota and the National Highway Traffic Safety Administration have taken pains to limit their probes to specific vehicles malfunctioning in a particular way. These limitations by no means describe the entire scope of the affected vehicles; nor do they encompass all of the scenarios under which drivers report that they experience an SUA event.

Drivers have reported vehicle surges and unintended acceleration under the following conditions:

- The vehicle was at idle
- The vehicle was in reverse at low speed
- The operator's foot was on the brake
- The vehicle was travelling at a constant highway speed

- The vehicle contained no all-weather accessory floor mats
- The accelerator pedal was not "sticking"

A number of reports allege the vehicle experienced multiple events.

For example, Kevin Haggerty, owner of a 2007 Avalon, experienced SUA multiple times; he did not have accessory floor mats, and the OE mats were secured in place.

Haggerty reported five SUA events. Several times, the vehicle accelerated without his foot on the gas pedal. The engine would return to idle after driving a few miles or after the Avalon shut down and restarted or was stopped and put into park. Haggerty's vehicle was checked at the dealership, but they could find nothing wrong. According to his NHTSA complaint:

"Then on 12/28/09 I was driving to work on a major highway. The car began to accelerate without my foot on the gas pedal. As I pushed on the brake, the car continued to accelerate. At that time I was not able to stop my vehicle by pressing hard on the brake. The only way I was able to slow the car down was to put the car into neutral. I took the next exit, which was the exit for the Toyota dealership. I called the dealership and told the service manager to meet me outside because I was experiencing acceleration problems. I drove approximately 5 miles by alternating from neutral to drive and pressing very firmly on the brakes. As I pulled into the front of the dealership I put the car into neutral and exited the car. With the brakes smoking from the excessive braking and the car's rpm's racing the manager entered my car. He confirmed that the mats were properly in place and confirmed the rpm's were very high."[6]

The Haggerty incident is particularly notable because Toyota technicians witnessed the vehicle engine racing at full-throttle, in neutral, and no mechanical causes of the incident were found. Subsequent interviews with Mr. Haggerty revealed that the Toyota dealer contacted Toyota's regional representative in Caldwell, NJ who later inspected the vehicle. The details of this inspection were not provided to the owner. However, Toyota Motor Sales authorized replacement of the throttle body and accelerator pedal assemblies and sensors and paid for the $1700 repairs and rental car costs. The owner was told by the Toyota dealer that the vehicle's computer had stored no error codes and they were unsure whether the repairs would fix the vehicle.

The complaint data challenge Toyota's assertions in a number of ways.

First, Toyota has insisted that there is no reason to believe that there could be an electronic cause of these sudden acceleration events. In news stories tied to the November 25 recall announcement, Mr. Irv Miller, Group Vice President of Toyota

[6] NHTSA ODI Number: 10300210; Complaint of Kevin Haggerty; National Highway Traffic Safety Administration; December 28, 2009

Motor Sales, U.S.A., Inc. reportedly stated, "We can come up with no indication whatsoever that there is a throttle or electronic control system malfunction."[7]

A scientific analysis from Quality Control Systems Corp. (QCS), however, finds that the proportion of consumer complaints related to vehicle speed control in some Toyota Camry, Tacoma, and Lexus ES vehicles is substantially higher in those models with electronic throttle control systems (Toyota's "ETCS-i") than it is for the same models without electronic throttle control.[8] The report also finds the proportion of reported speed control failures among complaints in the non-recalled Toyota Camrys with electronic throttle control compared to the recalled Camrys with electronic throttle control particularly troubling.

The report, written by Randy and Alice Whitfield, tested Toyota's conclusion that there is "no indication" of a throttle or electronic control system malfunction in the recalled vehicles as an hypothesis using data taken from consumer complaints made to the National Highway Traffic Safety Administration. Whitfield stated: "On the basis of the consumer complaint data, we believe there is evidence both to question and to reject this hypothesis for the recalled vehicles in our study."

The study was limited to the period beginning in 1999 until just before the well-known Santee, California crash in August 2009 so that the publicity surrounding the crash would not affect the study's results.

The report adds new information about the actual differences seen in complaint patterns for specific models with ETCS-i in their engines compared to the same models without ETCS-i. Even among vehicles that were not recalled, speed control-related complaints were reported at a higher rate for all three models with ETCS-i.

The report also shows differences in the reporting of speed control-related complaints for the recalled vehicles with ETCS-i compared to the non-recalled vehicles with ETCS-i. QCS found that the proportion of complaints related to speed control for the unrecalled Camrys with ETCS-i was 29 percent, compared with 25 percent for the recalled Camrys with ETCS-i.[9]

Second, in looking at the universe of consumer "speed control" complaints, it quickly becomes apparent that the recalls do not cover all affected vehicles. Further analysis of the total of 2,262 complaints examined by Safety Research & Strategies find that more than half – 1,122 – involve vehicles outside the current recalls. About a third (419) of these complaints involve 2002-2006 Camry (for models which could be confirmed).[10]

---

[7] Toyota Recall Fails to Address 'Root Cause' of Many Sudden Acceleration Cases, Safety Expert Says; ABC News; December 7, 2009.

[8] Electronic Throttle Control Systems in Toyota Consumer Complaints to NHTSA, Randy & Alice Whitfield, Quality Control Systems, Corp., February 3, 2010

[9] Electronic Throttle Control Systems in Toyota Consumer Complaints to NHTSA; Quality Control Systems Corporation; Feb. 3, 2010

[10] Appendix A: Unintended Acceleration Incidents Reported 1999-January 19, 2010 Involving Vehicles Outside of the Recall Populations

Could all of these incidents be caused by a sticking accelerator or an errant floor mat? Again, the complaints indicate that pedal interference or a sticking accelerator pedal do not explain many SUA incidents. (A sampling of these complaints to NHTSA of unintended acceleration in recalled vehicles not explained by pedal and mat failures can be found in **Appendix B.**)

Following is a common scenario reported to NHTSA by one owner of a 2009 Camry from Elkridge, Maryland:

> "I was in a parking lot of a shopping complex and I was trying to look for a parking spot. There was a parking spot between two cars on the right side, I slowly turned right into the spot, the car was in the spot and the car was straight and my leg was on the brakes. Unexpectedly the car started accelerating on its own, then the car with great speed climbed up the curb and hit the hair salon shop. The shop had 2-3 feet high brick wall and main door and other things are made with glass and metal frames. The car smashed the wall and glass door completely and landed inside the shop. I had to press the brakes really hard and finally it stopped there was a tire burning smell, I saw there was big drag tire mark on the shop floor. I had received a recall letter from Toyota 1-2 months back and it indicated that the driver side floor mat can interfere with the gas pedal and it had suggested to remove the floor mat and keep it in the trunks until further notice. Then I had removed all the floor mats and were in the trunk at the time of accident."[11]

Similarly a Lexus owner from Freehold, New Jersey reported:

> "I was driving my wife's Lexus 2008 IS 250 out of a parking lot when applying my foot on the brake the car accelerated. I now slammed my foot on the brakes and the car continued to accelerate. The only thing that stopped my car was the car in front of it with very little damage. If the car was not in front of me I was accelerating faster into on coming traffic. My floor mat is not on the floor as after the San Diego incident that was Toyota's reasoning. We were told roughly a month and half ago to take the mat out, which I did right away."[12]

Russell and Laura Scotti, of Bucks County, PA are confident that the three SUA incidents they experienced in their 2009 Camry hybrid since the summer were not related to floor mats. The first time it occurred, the vehicle accelerated onto I-95 in New Jersey and continued to accelerate. Laura Scotti tried braking the Camry but the incident didn't end until she heard an audible click and the acceleration stopped. At the time, the vehicle was equipped with after-market all-weather floor mats, but the mats, although unsecured by clips, had spikes underneath that kept them in place. The mat was not interfering.

---

[11] NHTSA ODI Number: 10299750; National Highway Traffic Safety Administration; December 21, 2009
[12] NHTSA ODI Number: 10291091; National Highway Traffic Safety Administration; October 31, 2009

The Scottis removed the accessory mats anyway and left the OE carpet mats clipped in place. One month later, the Camry experienced a second event. Again, as she accelerated onto the highway, the car kept going. This time, she applied both the brake and the emergency brake and was able to stop the Camry by pulling onto shoulder and turning off the key. The dealer claimed that the floor mat had caused the event, even though it was securely in place.

Scotti removed the carpet mats. Then, Scotti experienced a third SUA incident. This time, the Camry hit about 70 or 80 mile per hour before Scotti heard an audible "click" and the vehicle returned to idle. Scotti returned to the dealer, and three days later, a Toyota representative examined the car – and found nothing.

According to these reports, these drivers did not have floor mats in their vehicles during the SUA and/or they had not depressed the accelerator. Further, these complaint scenarios are repeated by hundreds of drivers – foot on brake, driving at a low speed (often in a parking lot), or a highway speed when the vehicle rapidly accelerates. Other drivers have also noted hearing an audible click sound before their vehicles return to normal.

Early Warning Reporting Data

In 2003, manufacturers began submitting early warning reports, as required by the Transportation Recall Enhancement Accountability and Documentation (TREAD) Act. This system, established in the wake of the Firestone tire / Ford Explorer tragedies, was supposed to alert the automakers and NHTSA to defect trends. The National Highway Traffic Safety Administration collects manufacturer information related to death, injury, property damage, warranty claims, field reports and production numbers, each quarter as the basis for evaluating emerging problems. How well did it work in the case of sudden unintended acceleration claims involving Toyota/Lexus vehicles?

A review of the data by Quality Control Systems of EWR data compiled from NHTSA's Early Warning Reporting database through the first quarter of 2008 found that two of the top five injury claims included 2007 Lexus ES350 and Toyota Camry "Speed Control." This ranking is notable because both vehicles were part of Toyota's floor mat recall (Recall 07E082) that included 2007 and early 2008 model Camry and Lexus ES models. Dealers received notice of this recall in September 2007. By the end of the first quarter of 2008, a high ranking in the EWR injury claims appears to indicate that either the recall was not effective in solving the problem or that the recall was poorly implemented. Either way, these data provided evidence of a continuing problem.

According to QCS, the vehicle fleets on the list appear in rank order, based on the unusual distribution of injury claims associated with each fleet. The order of these fleets in the list is not based on simple counts of claims. (This technique is related to one described in the paper found at: *Injury Prevention*, April 2004, 10:88-92 by R. A. Whitfield and Alice K. Whitfield. This methodology has been criticized by NHTSA.)

This Period	Field - Component	Last Period	Times on List	Notes
1	LEXUS ES 350 4D 2007 - Speed Control	-	1	Possibly related recall [illegible]
2	FORD TRUCK EXPLORER 4D 4WD 2002 - Visibility	3	10	Possibly related recall [illegible] Possibly related "special service campaign" [illegible]
3	JEEP LIBERTY 4D 4WD 2002 - Suspension	-	1	Possibly related recall [illegible]
4	TOYOTA CAMRY 4D 2WD 2007 - Speed Control	-	1	Possibly related recall [illegible]
5	FORD TRUCK F350 CREW C PU 4WD 2004 - Engine & Engine Cooling		1	Possibly related petition, but no recall [illegible]

Quality Control Systems, Corp., Rankings: Early Warning Reporting system through the first quarter of 2008.[13]

In early September 2009, Quality Control Systems Corporation released another analysis of the publicly available EWR death and injury data covering 2003-2008. QCS identified their top 10 vehicles with troubling trends for injuries and deaths. Number five was the Lexus ES with speed control problems.[14]

Using five and a half year's worth of death and injury claims, QCS was able to show which vehicles are involved in unusual patterns of deaths and injuries. They correlated those data with consumer complaints (Vehicle Owner Questionnaires, VOQs) in the NHTSA databases. Finally, QCS associated injuries/deaths and consumer complaints with recalls that were launched to address related problems. For the first time since the QCS began mining the EWR deaths and injuries information, each of the vehicle and component combinations on their top 10 list appeared to be clearly linked to specific consumer complaints. These problems, in turn, appeared to be well-recognized issues supposedly addressed by earlier recalls – potentially indicating that the recalls were failing to address the problems.

[13] Vehicle Safety Information Resource Center, October 2009
[14] Government Data Mired in Secrecy; Randy and Alice Whitfield; press release; Quality Control Systems Corporation; September 4, 2009

Fleet	Potentially Related Consumer Complaints	Potentially Related Recalls
2002 Ford Explorer	Liftgate hinges and struts, shattered glazing	04V442000
2004 Chevrolet Venture	Sliding power door and handle	04V597000
2004 Ford F-350 SD	Engine stalls	05V270000
2003 Ford Explorer	Liftgate hinges and struts, shattered glazing	04V442000
2007 Lexus ES 350	Unintended accelerations	07E082000
1999 Ford Explorer	Tire-related, loss of control crashes	00T005000
2004 Ford F-250 SD	Engine stalls	05V270000
2004 Toyota Tundra	Loss of control due to ball joint separation	05V225000
2002 Jeep Liberty 4X4	Loss of control due to ball joint separation	03V460000
2000 Ford Expedition	Control switch fires	05V017000

NHTSA Investigates

NHTSA has opened eight different investigations into SUA since 2003. Six were initiated by consumers' Defect Petitions. Only one – DP0400 involving SUA in 2002-2003 Lexus ES vehicles – was granted formal investigation status and rose to the Preliminary Evaluation stage. The other two investigations started as Preliminary Evaluations: PE07016 was initiated by five complaints and three crashes with injuries;[15] PE08025, involving 54,000 2004 Toyota Siennas, was opened based on a single complaint of unwanted acceleration, with no deaths or injuries.[16]

This is highly unusual – that the agency would examine a single manufacturer for unintended acceleration with such frequency, and that six separate consumers would initiate Defect Petitions on a single issue.

In eight investigations, why hasn't the Office of Defect Investigations ever discovered any electronic problems? We can not evaluate the entire record because we do not have access to it. Toyota has requested and obtained confidentiality for some critical pieces of the puzzle; most centrally, its throttle design and the Failure Modes and Effects Analysis documents, which show how engineers have envisioned system failures and their likely consequences. However, the public record does indicate several problems with past investigations: they have been opened and closed too quickly to get to the root of a complex problem; critical data have been excluded from the analysis; the agency lacks expertise in the area of electronic forensics and has ignored inconsistencies, accepting in whole Toyota's explanations – that electronic failure cannot occur unless its diagnostic system catches them; and the agency has an institutional bias against a non-mechanical or non-driver cause of sudden acceleration.

[15] PE07016; Opening Resume; National Highway Traffic Safety Administration; March 29, 2007
[16] PE08025; Opening Resume; National Highway Traffic Safety Administration; April 10, 2008

In myriad investigations NHTSA has conducted, only a tiny fraction of the crashes and injuries have been counted as part of working dataset. Three fatalities have been referenced, but only one has ever been officially considered by the agency in an SUA investigation. (Even though the August 2009 Saylor crash in Santee, California, which killed the driver and three occupants, has driven all the recent official activity by the agency and Toyota, it was not counted in the context of the open investigation at the time, according to the Closing Resume of DP09001.) In Engineering Analysis 07010,[17] ODI investigators describe a July 2007 fatality that was examined by NHTSA's Special Crash Investigations office, but had not been reported on a Vehicle Owner Questionnaire. "The operator reportedly traveled at speeds in excess of 100 mph for an estimated eight miles on an interstate in California before it struck two other vehicles. One of the struck vehicles and the subject vehicle caught fire. The occupant of the struck vehicle did not evacuate and died at the scene. The subject vehicle driver suffered a broken bone."[18]

All of the investigations were very short – in many cases open only a few months. The probes have been closed on two bases: what Toyota and the agency said were low incidence numbers – as measured by the way the problem was defined against Vehicle Owner Complaints (VOQs), warranty claims, complaints directly to the manufacturer (the usual data points), and the agency and service technician's inability to locate any electronic cause of the complaints. Table 3 contains a brief chronology of the investigations.

NHTSA's investigative methods have consisted of examining the complaint/warranty claims/crash data; interviewing complainants; vehicle inspections; some laboratory testing; test drives of complainants' vehicles; and examining Toyota documents and holding discussions with Toyota.

For example, on July 7, 2004, NHTSA ODI staff memorialized a meeting that took place with Toyota after the automaker prepared sample hardware and electronic throttle components which were reviewed by NHTSA.[19] Toyota made a presentation to NHTSA which covered an overview and history of Toyota's ETC systems, design strategy/ETC system operation, diagnostic capabilities and failure mode fail/safe operations. The group then left to examine two vehicles a short distance away. One vehicle was outfitted with an oscilloscope, to allow monitoring of various ETC system circuits, and a circuit interrupt device, to allow simulation of component or circuit failure. The vehicle also had a modified ECM that allowed Toyota to demonstrate ETC system response to a microprocessor failure. Toyota demonstrated various types of component failures and their resistant fail/safe operation for NHTSA assessment. These types of meeting never yielded any insight into how the electronic throttle system could be malfunctioning in a way that the diagnostic fault code system couldn't detect.

---

[17]; Engineering Analysis 07010; Closing Resume; National Highway Traffic Safety Administration;; October 11, 2007

[18] Engineering Analysis 07010; Closing Resume; National Highway Traffic Safety Administration;; October 11, 2007

[19] Technical Meeting with Toyota; PE04021; Scott Yon; National Highway Traffic Safety Administration; July 7, 2004

NHTSA also did some independent testing at the agency's Vehicle Research and Test Center in Liberty, Ohio. The latter turned up a potentially important clue that the electronic throttle could be affected by magnetic interference: "Magnetic fields were introduced in proximity to the throttle body and accelerator pedal potentiometers and did result in an increase in engine revolutions per minute (RPM) of up to approximately 1,000 RPM, similar to a cold-idle engine RPM level. Mechanical interferences at the throttle body caused the engine to shut down." [20]

(That electromagnetic forces could interfere with the throttle system was something Toyota already knew. The MY 2003 Camry owner's manual warns that the installation of a mobile two-way radio system could affect electronic systems, including the fuel injection, electronic throttle control system, cruise control system, and other electronics."[21])

Table 3. NHTSA Investigations of Toyota SUA

Investigation number	Opened	Vehicles	Upgraded	Closed	Reason
DP03003	7/17/03	1997-2000 Lexus LS; GS 400	No	9/23/03	No data to support further investigation
DP04003	2/4/10	2002-2003 Lexus ES	PE04021 on 3/3/04	7/22/04	No data to support defect trend; no cause found
DP05002	8/5/05	2002-2005 Camry, Solara; Lexus ES 350	No	1/5/06	No data to support defect trend; no cause found
DP06003	9/14/06	2002-2006 Camry; Solara	No	4/3/07	No data to support defect trend; no cause found
PE07016	3/29/07	2007 Lexus ES 350	EA07010 on 8/8/07	10/11/07	Floor mat recall
DP08001	1/31/08	2006-2007 Tacoma	No	8/28/08	No data to support defect trend; no cause found
PE08025	4/10/08	2004 Sienna	EA08014 on 8/8/08	1/26/09	Floor mat recall
DP09001	4/8/09	2007 ES 350; 2002-2003 Lexus ES300	No	10/29/10	Floor mat recall and other fixes

[20] EA07010; Final Report: 2007 Lexus ES-350 Unintended Acceleration; Michael Monk; Vehicle Research and Test Center; April 30, 2008

[21] MY 2003 Camry; Owner's Manual; Toyota 2003

Aborted Efforts to Look at Toyota's Most Troubled Vehicle: The Early-Model Camry

Despite the Camry's prominent presence in the complaint data, it has only been the central subject of two investigations, initiated by defect petitions.

There is evidence that, early on, the agency intended to investigate the Camry, but this investigation was never actually opened. In July 2003, the Pasadena, Calif. owner of a 2002 Camry described an SUA incident that occurred in March 2003 while slowly backing down a long driveway with her foot on the brake. Her Camry suddenly rocketed backward and hit a palm tree. The crash then propelled the vehicle forward 130 feet, where it came to rest. The vehicle was considered a total loss and was never examined. The owner reported this incident to NHTSA, and in July, received an e-mail from the ODI staff asking for the specific details of her crash.[22]

"We are preparing an investigation regarding the nature of your reports so any and all information is greatly appreciated and is beneficial to our investigation," the investigator wrote in July 2003.[23]

Four months later, the owner wrote a letter to NHTSA asking what had happened.[24] Her initial contact had apparently left the agency, and she had received a voice message from another individual identifying himself as a NHTSA staffer. Although she left messages at the number provided, no one from NHTSA ever re-contacted her. The owner followed up with a letter to the agency describing her experience. The public documentation of this case did not contain NHTSA's reply to her.

(That investigation may have been shelved by a Defect Petition 03003 filed on May 27, 2003, by Massachusetts resident Peter Boddaert, owner of a 1999 Lexus LS400, who experienced multiple instances of SUA.[25] Later, the 2002-2003 Camry was added to PE04021 in March 2004)[26]

But, in 2005, another Camry owner filed a defect petition – describing almost the exact same scenario as the Pasadena owner – same model, model year and SUA experience. Jordan Ziprin, a retired labor lawyer, living in Phoenix, AZ asked the agency to investigate after his 2002 Camry suddenly accelerated as he backed down a driveway, causing him to lose control, cut a wide arc and crash into a utility box. Ziprin said that he didn't remember if he tried to apply the brake, but he was certain he didn't apply the accelerator, because the vehicle was already moving rearward under its own power.[27]

---

[22] Letter to Kathleen DeMeter from unidentified Camry owner, 10023329; November 19, 2003.
[23] Letter to Kathleen DeMeter from unidentified Camry owner, 10023329; November 19, 2003.
[24] Letter to Kathleen DeMeter from unidentified Camry owner, 10023329; November 19, 2003.
[25] DP03003; Defect Petition; Peter Boddaert; April 25, 2008
[26] PE04021; Opening Resume; National Highway Traffic Safety Administration; March 3, 2004
[27] DP05002 Denial of Defect Petition; Federal Register Notice; National Highway Traffic Safety Administration; December 23, 2005

The agency opened an investigation on August 5, 2005. It requested information from Toyota, performed mechanical and rudimentary computer inspections of two vehicles – Ziprin's and another vehicle from Falls Church, VA and looked at the VOQ data.[28]

To bolster his argument, Ziprin mined the VOQs, looking for other similar complaints, and submitted to those he thought relevant. NHTSA investigators eventually winnowed those to 93 reports alleging throttle control problems where the brake was reportedly ineffective at controlling vehicle movement. In further examining these types of complaints, the agency found that inspections at the dealership, by Toyota or other service technicians, could find nothing wrong with the vehicles. ODI said that the complaint rate was unremarkable.[29]

Another 168 reports described incidents similar to Ziprin's – where a vehicle equipped with an electronic throttle experienced an SUA at a low speed in tight quarters and crashed the vehicle. Again, ODI looked more closely at a subset of these complaints. And again, the agency indicated subsequent inspections found nothing wrong with the vehicles and the complaint rate was unremarkable.[30]

Toyota's argument, in brief, was that its systems were built with multiple redundancies and that the electronic throttle control could not malfunction without its diagnostic system catching the error and employing one of four failsafe modes. It flatly rejected the very concept of unintended acceleration stating:

> "With regard to allegations of unintended acceleration, *Toyota does not believe that uncontrollable acceleration can occur without the driver applying the accelerator pedal because of the several detection systems described above.* If an abnonnal condition occurs, such as the ETC sending the signal to the throttle body to open the throttle without applying the accelerator pedal due to a failure of a component or a malfunction of the system, or if the throttle simply were to open on its own, the system goes into failsafe mode. In addition, the brake system and the ETC system are mechanically separated and work independently of each other. *Therefore, even if the ETC system fails, the brake system still works as designed and unintended acceleration cannot occur.* Furthermore, brake systems that fail mechanically leave evidence of their failure after the occurrence and do not return to normal operating conditions by themselves."[31]

DP05002 was closed in December 2005 with no defect finding. Nine months later, another 2006 Camry owner, William Jeffers III, submitted a Defect Petition based on multiple, brief experiences of engine surging. According to the *Federal Register* notice

[28] DP05002 Denial of Defect Petition; Federal Register Notice; National Highway Traffic Safety Administration; December 23, 2005
[29] DP05002 Denial of Defect Petition; Federal Register Notice; National Highway Traffic Safety Administration; December 23, 2005
[30] DP05002 Denial of Defect Petition; Federal Register Notice; National Highway Traffic Safety Administration; December 23, 2005
[31] DP05002; Toyota Response; November 15, 2005

denying Jeffers' petition, DP06003, his Camry did exhibit diagnostic trouble codes related to the operation of the throttle actuator.[32] The *Federal Register* notice also indicated that "a service technician found two diagnostic trouble codes related to the operation of the throttle actuator stored in the engine control unit's memory. After a new replacement throttle actuator was installed, another, more severe surge event occurred. Again, the Toyota dealership technician discovered a throttle actuator operation trouble code stored in memory. An electrical connector for the newly installed throttle actuator was 'adjusted' and the ground circuits were checked. NHTSA test drove this vehicle and could find nothing wrong."[33]

Interestingly, ODI arranged with Toyota to have the suspect actuator sent to a facility owned by the component supplier, Aisan Industry Co., Ltd. Aisan analyzed it via a physical inspection, including X-ray, mechanical testing, electrical testing, environmental testing, and destructive tear down. The final investigation report, which was confidential, found no problem.[34] Two years later, an anonymous correspondent from Franklin, Kentucky, home to a division of Aisan Industry, accused the supplier of shipping throttle bodies with cracked shafts that alleged could cause the throttle to open.[35]

DP06003 closed after eight months. ODI investigators examined the vehicle and found no problems; the investigation's examination of complaints was limited to warranty claims only. Most of Toyota's responses were confidential. No other investigations have focused solely on Camrys.

The Lexus Investigations

The agency devoted four investigations of varying intensity to Lexus vehicles: DP03003; DP04003, which was upgraded to PE04021; PE07016, which was upgraded to EA07010; and DP09001. (Camry vehicles were included in PE04021 and EA07010). In the numerous investigations of Lexus vehicles, no cause has ever been found, except floor mat interference.

DP03003, opened in July 2003, after a Defect Petition was filed on May 27, 2003, by Massachusetts resident Peter Boddaert, owner of a 1999 Lexus LS400, who experienced multiple instances of SUA.[36] In this first investigation, NHTSA "limited the complaint count to only those complaints related to Vehicle Speed Control-linkages in its ARTEMIS consumer complaint repository."[37] NHTSA concluded that the Lexus was not

[32] Denial of Petition; DP06003; Federal Register Notice; National Highway Traffic Safety Administration March 5, 2007
[33] Denial of Petition; DP06003; Federal Register Notice; National Highway Traffic Safety Administration March 5, 2007
[34] Denial of Petition; DP06003; Federal Register Notice; National Highway Traffic Safety Administration March 5, 2007
[35] Denial of Petition; DP06003; Federal Register Notice; National Highway Traffic Safety Administration March 5, 2007
[36] DP03003; Defect Petition Request; Peter Boddaert; April 25, 2003
[37] DP03003; Denial of Petition; Federal Register Notice; Vol. 68; Pg. 55076; National Highway Traffic Safety Administration; September 22, 2003

over-represented, compared to peer vehicles, Cadillacs and Lincolns. "Based on this analysis, there is no evidence that Lexus vehicles are experiencing vehicle speed control-related problems more frequently than their peers."[38]

Seven months later, another Lexus owner, Carol J. Matthews filed another Defect Petition, complaining of multiple short-duration SUA events.[39] Matthews had identified 37 other incidents in NHTSA's VOQ system that described instances similar to her experiences. The agency rapidly elevated the defect petition to a Preliminary Evaluation and included Camry vehicles in the expanded probe.[40]

PE04021 lasted four months, and was closed on the basis of insufficient data and an inability to find any cause for the complaints. This investigation appears to have been hampered by a decision to narrow its scope to exclude some of the most critical types of SUA events: long duration instances, and instances in which the brakes could not overcome the open throttle.

According to a deposition taken in *Alberto v. Toyota*, Christopher Santucci, a former NHTSA Office of Defects Investigations (ODI) investigator and now Toyota's Assistant Manager of Technical & Regulatory Affairs, testified that Toyota and ODI had discussions about the scope of PE04021 early on.[41] Later, in March 2004, ODI investigator Scott Yon wrote a memo stating that the scope of the investigation would be narrowed to eliminate longer duration events where applying the brake pedal didn't stop the vehicle.[42]

In its response to the agency's inquiries in PE04021, Toyota quibbled about the definition of SUA and the term vehicle surge: "Toyota believes a vehicle surge to be something less than a wide open throttle event but above typical throttle adjustments such as when the air conditioning compressor is activated or power steering assist is required. Also, according to the complainants' own words the vehicle tended to accelerate at the time of application of the brake pedal. Without physical evidence or electronic codes stored in the vehicle's computers, we believe those incidents to be similar to incidents referenced in other SUA investigations..."[43] In other words, Toyota was also eliminating engine surges that occurred when the driver was applying the brake, or surges in which the vehicle accelerated to a high speed – the two types of incidents that Toyota and Lexus owners were complaining about.

The agency also did not include a fatality in the official data set. In its closing report, NHTSA mentioned one death (VOQ 10065859) in which a vehicle drove off the fourth floor of a parking garage killing the operator and the single passenger.[44]

---

[38] DP03003; Denial of Petition; Federal Register Notice; Vol. 68; Pg. 55076; September 22, 2003
[39] DP04003; Opening Resume; National Highway Traffic Safety Administration; February 17, 2004
[40] PE04021; Opening Resume; National Highway Traffic Safety Administration; March 3, 2004
[41] Deposition of Christopher Santucci; Pg. 283; Alberto v. Toyota; December 9, 2009
[42] Complaints Update; PE04021; Scott Yon; National Highway Traffic Safety Administration; March 23, 2004
[43] PE04021; Toyota Response; Chris Tnito; Toyota Motor Corporation; June 4, 2004
[44] PE04021; Closing Resume; National Highway Traffic Safety Administration; July 22, 2004

ODI terminated the investigation in July 2004. Its reasons were nearly identical to those in earlier closures – not enough data and a low warranty claims rate. Electronics could not be blamed, because the complainants' vehicles did not malfunction in the way that Toyota said it must:

> "ODI failed to find any evidence in the interviews conducted (113 VOQ and 36 Toyota reports, 149 total), or in the information provided in Toyota's IR response, of instrument panel warning lamp illumination or ETC diagnostic codes detection. None of the complainants interviewed described conditions similar to failsafe mode operation. One report (10062931) was found where an ETC component replacement occurred in connection with a repair attempt related to the alleged defect, no others were found."[45]

But the problems for Lexus owners did not recede. In 2007 and 2009, NHTSA would again investigate sudden acceleration in Lexus models.

The agency opened Preliminary Evaluation 07016 in late March 2007, based on five complaints, three crashes and seven injuries. It was specifically aimed at examining the role of the floor mat in Toyota SUA. The Opening Resume did not describe the SUA scenarios that prompted this investigation; it focused solely on the idea of unsecured all-weather floor mats.[46] However, in this investigation, the allegations were more serious. Drivers told ODI that they experienced unwanted acceleration after releasing the accelerator pedal and that subsequent and repeated braking did not stop the vehicle. In some cases, drivers traveled significant distances at high vehicle speeds (greater than 90 mph) before the vehicle stopped.[47]

These were exactly the scenarios that the agency tossed out of consideration in PE04021.

In this investigation, Toyota insisted that it had done everything that it could to warn drivers not to stack an accessory rubber floor mat on top of the original equipment carpet mat:

> "The ES350 has an available rubber floor mat option that cannot be used in conjunction with another floor mat at the same time. This is because these floor mats, as with all Toyota, Lexus, and Scion vehicle floor mats, utilize retaining clips in order to prevent the floor mat from sliding forward and interfering with the operation of the foot pedals. The retaining clips are affixed to the vehicle carpet. When a floor mat is placed on top of the vehicle carpet, proper installation requires the retaining clips be used to prevent unwanted movement of the floor mat, as instructed in the owner's manual. If a floor mat is already installed on the

[45] PE04021; Closing Resume; National Highway Traffic Safety Administration; July 22, 2004
[46] PE07016; Opening Resume; National Highway Traffic Safety Administration; March 29, 2007
[47] PE07016; Closing Resume; National Highway Traffic Safety Administration; August 8, 2007

> carpet, and another floor mat is placed on top of the installed floor mat, the top mat will not be secured by the retaining clips"[48]

Despite Toyota's assertions, the agency bumped up the status to an Engineering Analysis in August. EA07010 was closed two months later, when Toyota initiated a limited floor mat recall campaign.[49] (See "Are Floor Mats the Cause of Sudden Unintended Acceleration in Toyotas?")[50]

The agency's most recent examination of SUA in Lexus vehicles was at the request of petitioner Jeffrey Pepski of Minnesota. In April 2009, Pepski asked the agency in a detailed and sophisticated defect petition to re-open its investigation into SUA in Lexus ES350s. He experienced an SUA event while driving at high speed, in which the vehicle accelerated to 80 mph. Pepski tried pumping and pulling up the accelerator with his foot – to no avail. Pepski's Lexus was equipped with a standard carpet mat, not the all-weather variety said to trap accelerator pedals, and his efforts to pull up the pedal would have dislodged the floor mat.

In May, Toyota took the unusual step of trying to kill the defect petition investigation by responding directly, point by point. Three months later, Mark Saylor and his family died in the Santee crash. This event seemed to cement in NHTSA's mind that floor mats – again – were the sole cause of Toyota SUA. In the Closing Resume, ODI cited 64 complaints alleging incidents of unwanted acceleration in MY 2007 Lexus vehicles, resulting in eight crashes and 15 injuries. Eighty percent involved incidents of floor mat interference, including all the crashes and injuries, it asserted. "ODI's analysis found that the only defect trend related to vehicle speed control in the subject vehicles involved the potential for accelerator pedals to become trapped near the floor by out-of-position or inappropriate floor mat installations."[51]

ODI also took pains to specifically disassemble Pepski's arguments for further action. In the Petition Denial, ODI created a table of 10 consumer complaints that Pepski had submitted as evidence that other Lexus owners were experiencing SUA at high speeds for sustained periods:

> "Contrary to the petitioner's contention, six of the VOQs were related to floor mat interference (four of the five that petitioner singled out as unrelated to floor mats were related to floor mats)."[52]

This might be charitably characterized as a misreading of the record. Here are three examples:

---

[48] PE07016; Toyota Response; Christ Tinto ; Toyota Motor Sales ; Response 15; Pg 13; 2007; June 11, 2007

[49] EA07010; Closing Resume; National Highway Traffic Safety Administration; October, 11, 2007

[50] Are Floor Mats the Cause of Sudden Unintended Acceleration in Toyotas?, Safety Research & Strategies, Inc., October 30, 2009; http://www.safetyresearch.net/Library/Toyota_Floormat.pdf

[51] DP09001; Closing Resume; National Highway Traffic Safety Administration; October 29, 2009

[52] DP09001; Denial of Petition; National Highway Traffic Safety Administration; October 27, 2009

In its entirety, VOQ 10199857 says:

> "I purchased 2007 Lexus ES 350 in December of 2006. Sometime in last month, when I was driving the vehicle on a highway, its brake stopped working all of a sudden, and started accelerating by itself. I looked at my foot wondering if my foot was on gas pedal, instead of brake pedal, but it was on brake pedal. I was in a total panic, but managed to drove the car away to the shoulder of the highway by putting the car in park mode. I thought I was dead at that moment. I am trying to sue the Lexus. I honestly believe that car will kill someone. Before starting a legal proceeding, my attorney sent a letter to Lexus headquarter, and was told that the vehicle had no problem, and that the cause was the floor mat. But, it was not. As I said earlier, I looked at my foot when the vehicle did not stop, and after I stopped the car, I carefully looked at both gas pedal and brake again. I am not blind. Have you seen any other complaints for similar problems? Please let me know. It will be really helpful for me to win the case. I am not trying to make money by suing Lexus, but trying to have Lexus recall all of its ES350 since it will kill someone. *jb"[53]

In ODI's table it appears as: "Unsecured floor mat discovered and corrected during dealer inspection."[54]

In its entirety, VOQ 10203221 says:

> "On two prior occasions the vehicle accelerated from speeds between 20-30 mph, to speeds up to 50-60 mph. On 9/11/07, the vehicle accelerated at speeds up to 80-90 mph. We are aware of the Lexus notification of floor mat interference, so we removed the mats after the first two times, but the last and most frightening, occurrence happened without the mat in the vehicle. The car had to be forced into park in order to slow it down to a halt. My wife was driving the vehicle at the time and she states she almost had several multiple car accidents while trying to stop the vehicle. I had the vehicle towed to the dealer and they said it's the floor mat, before even driving the car. We won't drive the car again until someone other than Lexus determines what the problem is. *tr"[55]

In ODI's table, it appears as: "All-weather accessory floor mat improperly stacked on top of carpet mat."[56]

In its entirety, VOQ 10230929 says:

> "Reported: 27-may-2008 (incidence Memorial Day weekend 25 may 2008) problem: runaway acceleration: evidence of malfunctioning cruise control car was nearing end of 200 mile trip. Cruise control had been engaged on and off for last hour. Driver stopped at entrance onto old-designed fast-moving highway rte4)

---

[53] VOQ 10199857; National Highway Traffic Safety Administration; July 3, 2007
[54] DP09001; Denial of Petition; National Highway Traffic Safety Administration; October 27, 2009
[55] VOQ 10203221; National Highway Traffic Safety Administration; September 11, 2007
[56] DP09001; Denial of Petition; National Highway Traffic Safety Administration; October 27, 2009

> with old-fashioned short access and no breakdown lanes. Cruise control green light on, but system supposedly disengaged. Car began to exhibit strong engine noise and runaway acceleration. Driver shut off cruise control, passenger observed the light go off and then back on several times. Driver firmly stepped on brakes. The brakes smoked and smelled of burning. When car slowed down, driver pulled to small indentation at side and pressed ignition button for several seconds. Car stopped with jolt. Driver started car in park. Engine made same loud blow-out sound. Re-shut down car. Driver restarted car to move to exit about 50 yds ahead. Car began run-away acceleration again, driver repeated steps pushing hard on brakes (smell and smoke) and shutting car off by pressing ignition button. Off-duty police (chief of force) smelled brakes and said loud engine noise made car a hazard; tow driver would also testify to loud engine noise when car turned on again to be placed on his truck. Because spill of ice-coffee during incident, mats were inspected by both driver and passenger before car was towed. Both noted that mats were intact and in their proper place. Driver noted clips were in place. (the car was in compliance with Lexus recall of mats having been serviced two months prior to incident.) Improper mats are still Lexus stated cause; however, driver and passenger say this is not case. Cruise control malfunctioning seems likely cause of runaway-acceleration. While our dealer is responsive, national Lexus has been most neglectful; agent does not return calls; and this is almost three weeks after incident. *tr see also 10228954 &10229189 *dsy"[57]

In ODI's table, it appears as: "All-weather accessory floor mat improperly stacked on top of carpet mat."[58]

In November, SRS submitted a Freedom of Information Request to NHTSA, requesting any additional documentation the agency might have to establish its conclusions that these were floor mat-related incidents. On January 28, NHTSA replied, referring SRS to the same information, now currently on its publicly available website:

> "..we searched for and found no supplementary information regarding the ten complaints you cited on unwanted acceleration. If you want to view these ten complaints, go to the website identified above."[59]

Toyota agreed to remedy the situation with a floor mat recall and NHTSA denied the petition in October 2009.

The Tacoma Investigation:

Like previous investigations, DP08001 opened and closed in seven months, with ODI concluding that no defect could be found and that there was no data to support the existence of a trend. The investigation was initiated in late January 2008 by William

[57] VOQ 10230929; National Highway Traffic Safety Administration; May 25, 2008
[58] DP09001; Denial of Petition; National Highway Traffic Safety Administration; October 27, 2009
[59] RE: Freedom of Information Act (FOIA) Request, 5 U.S.C. 552; Stanley Feldman; National Highway Traffic Safety Administration; January 28, 2010

Kronholm, a retired journalist, who experienced two bouts of unintended acceleration within a two-hour time span.[60] Both occurred at low speed; one incident took place as the vehicle was at idle; one took place as the vehicle was in reverse.

ODI interviewed Kronholm and other complainants; reviewed the VOQ data; and examined Toyota's submissions (most are confidential.)[61] Again, ODI removed any complaints that did not fit Kronholm's basic scenario. It concluded that most of the complaints "involved various explained aspects of the Tacoma's throttle control system that do not seem to present a significant safety risk under most circumstances, or did not involve a failure of the throttle control system. For the remaining quarter, although there may have been an issue with the throttle control system as one possible explanation, we have been unable to determine a throttle control related or any underlying cause that gave rise to the complaint. For those vehicles where the throttle control system did not perform as the owner believes it should have, the information suggesting a possible defect related to motor vehicle safety is quite limited." [62]

The Sienna Van Investigation: Fewer Data, Bigger Problem

The investigation into the 2004 Sienna vans was opened as a preliminary evaluation in April 2008 on the basis of a single complaint.[63] The outlines of this investigation are remarkable for two reasons. One, for a single complaint – with no injury or death – to launch a preliminary evaluation is rare. But, at the time, the Tacoma investigation was still ongoing. The agency had already shuttered four different investigations into Lexus and Camry vehicles with no defect finding, and had forced Toyota to launch a recall for All-Weather Accessory floor mats in a limited number of Lexus vehicles. Two, the agency acted and pressured Toyota into a recall on the basis of virtually no complaint or warranty data – after summarily rejecting petition after petition on the basis of insufficient data.

Within four months, the agency bumped up the investigation to an Engineering Analysis. This was based on a Toyota response in June about "an accelerator pedal interference incident that occurred during production dynamometer testing at the assembly plant for an early production MY 2004 Sienna minivan. The incident was caused by a missing retaining clip that allowed the center console trim panel to interfere with (trap) the accelerator pedal after it had been depressed. Toyota subsequently implemented a 100 percent inspection requirement for the retaining clip. In June 2003, Toyota changed the original design of the trim panel to eliminate the potential for pedal interference in the event the retaining clip is not present."[64]

---

[60] DP08001; Denial of Defect Petition; Federal Register; National Highway Traffic Safety Administration; September 3, 2008
[61] DP08001; Closing Resume; National Highway Traffic Safety Administration; August 28, 2008
[62] DP08001; Denial of Defect Petition; Federal Register Notice; Vol. 72; page 51551; National Highway Traffic Safety Administration; September 3, 2008
[63] EA08014; Closing Resume; National Highway Traffic Safety Administration; January 26, 2009
[64] EA08014; Closing Resume; National Highway Traffic Safety Administration; January 26, 2009

In its Closing Resume, the agency cited exactly four incidents of "interference by the trim panel (which) have occurred in service. In at least three of the incidents, the interference occurred after service was performed that required removal and reinstallation of the subject trim panel and retaining clip."[65]

Toyota finally issued a limited recall for vehicles built between January 10, 2003 and June 11, 2003, when the original design floor carpet cover was used in production. The recall was conducted as a "safety improvement" campaign.[66]

A Case of Historical Bias? A Brief History of SUA

Sudden unintended acceleration is a complex problem. There are multiple causes that can result in a vehicle accelerating without the driver's intent: design defects which induce driver error – such as poor pedal placement, the lack of a shift interlock, floor mat interference, or mechanical or electromechanical defects and electronic defects. The latter –which is the most difficult to pinpoint – is nonetheless a likely possibility as vehicle systems rely more heavily on sophisticated computer-driven electronics. And yet, automakers and NHTSA behave as though it is perfectly rational to assume that electronics housed in the hostile automotive environment – including the fault detection system – will always function as intended; and that malfunctions will be easily reproduced in a laboratory setting.

Elsewhere, however, the case has been persuasively made that NHTSA and automakers have ignored the real possibility of intermittent and other faults in the electronic systems of today's automobiles. The 2003 reference book, *Sudden Acceleration,* by Carl E. Nash, of the National Crash Analysis Center at George Washington University, and Clarence Ditlow, of the Center for Auto Safety, James Castelli and Michael Pecht, Professor and Director CALCE Electronic Products and Systems Center at the University of Maryland, argue that the auto manufacturers lag those in other industries whose products rely on electronic systems in understanding the myriad ways their microprocessors and electronics components can fail.[67] NHTSA, the authors conclude, has also failed miserably in its attempts to find a cause other than a floor mat or driver error, because the agency employs an arbitrarily narrow definition of SUA – that it must occur from a standstill – and has conducted its investigations on incorrect assumptions and illogical reasoning.[68]

Drivers have been complaining about sudden unintended acceleration events for a quarter of a century and continue to lodge these complaints with manufacturers and NHTSA. Yet, NHTSA has made virtually no substantive progress toward understanding how electronic systems housed in an environment subject to heat, vibration, sudden shocks, various levels of electromagnetic interference, moisture, and other corrosive conditions could fail; or how they could be detected; or what appropriate countermeasures must be

[65] EA08014; Closing Resume; National Highway Traffic Safety Administration; January 26, 2009
[66] Recall 09V023; Toyota Motor Corporation; January 14, 2009
[67] Sudden Acceleration; Carl E. Nash, Clarence Ditlow, James Castelli and Michael Pecht; 2003
[68] Sudden Acceleration; Carl E. Nash, Clarence Ditlow, James Castelli and Michael Pecht; 2003

instituted other than expecting drivers to somehow overcome an open throttle on a runaway vehicle.

In the 1980s, Audi became the poster child for unintended acceleration. More than 1,600 consumers alleged that their Audi 5000 vehicles had accelerated without driver input and crashed; 400 had been injured and six died in SUA crashes.[69] The company denied that there was anything wrong with the vehicle and blamed the problem on shorter than average drivers who did not have much experience driving an Audi, and had mistakenly depressed the gas pedal when they meant to step on the brake. The response was a public relations and marketing nightmare. Audi sales plunged, and the complaints continued.[70]

The Audi 5000 was the subject of an infamous *60 Minutes* story, in which the news program attempted to simulate SUA.[71] The broadcast drove Audi sales down further, and the network was heavily criticized for its one-sided story. As the history is often recounted today, NHTSA vindicated Audi and CBS never apologized for maligning the automaker.[72]

However, between 1982 and 1987, Audi launched five recalls to address the problem. The first three attempted to fix what Audi had characterized as the driver-error problem by tweaking the pedal positions.[73] [74] [75]

In 1987, Audi launched a fourth recall of 81,000 Audi 5000 vehicles from the 1986 and 1987 model years, for worn idle stabilizer units.[76] As Audi explained to its customers: "The idle stabilizer has the purpose of maintaining uniform engine idle speed by regulating air flow under different operating conditions, such as variations in engine temperature, and on/off cycling of the air conditioner or power assist pump. Excessive idle stabilizer wear causes engine idle fluctuations which increase with the usage of the car. If a worn unit is not replaced in a timely fashion, the engine idle could ultimately see-saw so severely that it may surprise a driver who is not acquainted with the vehicle's condition and fails to apply the brake. Under these circumstances, there is a risk of a collision in a confined space with the possibility of injury." [77]

The fifth and final recall for 250,000 1978 to 1987 vehicles added a brake-shift interlock – which requires drivers to depress the brake pedal before shifting out of the Park position.[78]

---

[69] Audi Sudden Acceleration; The Center for Auto Safety, May 1987
[70] Audi: Shifting the Blame; Thomas Wathen; The Multinational Monitor; Vol. 8; Issue 5; May 1987
[71] Out of Control; 60 Minutes; broadcast; CBS; November 23, 1986
[72] Manufacturing the Audi Scare; Peter Huber; Wall Street Journal; December 18, 1989
[73] Recall 82V-037: 1978-82 Audi 5000, April 14, 1982.
[74] Recall 83V-095;1978-83 Audi 5000, September 1, 1983
[75] Recall 86V-103: 1985-6 Audi 5000S, July 28, 1986
[76] Recall 87V009: 1985 Audi 5000S; January 14, 1987
[77] Recall 87V009; 1985 Audi 5000S; January 14, 1987
[78] Recall 87V-008: 1978-86 Audi 5000, January 14, 1987

In 1989, NHTSA published "An Examination of Sudden Acceleration."[79] This report was intended to end all debates on SUA. Its primary conclusion was that only the driver's foot or the cruise control could move the throttle to the wide-open position. The study also noted that SUA could be caused by simple mechanical failures of the throttle cable or floor mat interference. Under these conditions, a significant decrease in the driver's ability to stop the vehicle was also noted. However, the general thrust of the report was that NHTSA could not find any vehicle defects causing SUA. The condition, the agency concluded, was caused by driver error, although the agency noted that it could be induced by poor vehicle design (i.e., brake, accelerator pedal placement and offset). The study recommended the installation of automatic shift-locks , which require the driver to depress the brake pedal before the vehicle can be shifted out of Park to prevent the driver from depressing the accelerator instead of the brake.

Based on SRS interviews with Dr. Antony Anderson, an electrical engineering consultant in the UK who has examined numerous SUA crashes, he says that NHTSA's report was based on nine underlying assumptions, but did not provide the basis for those assumptions. The agency defined sudden unintended acceleration as only instances where the vehicle lurches suddenly forward or in reverse from a standstill. This automatically discounted many other situations in which a vehicle's throttle is wide open in direct contradiction to the driver's demands, be at full speed, a slow speed or in a cruise control mode. Further, he says, the systems that NHTSA examined in the late 1980s bear no resemblance to fully electronic throttle systems of today.

The 1989 report and the significant numbers of reported SUA incidents did prompt manufacturers to adopt shift-interlocks in their vehicles in the late 1980s. The report also appeared to reflect a mindset at the agency that SUA had no cause short of mechanical interference or driver error. In 1999, the *Wall Street Journal*, which profiled one of ODI's principal SUA investigators, and his probe into Ford Econoline vehicles, underscored the staff's firm belief in pedal misapplication.[80]

In 2003, when the agency rejected Peter Boddaert's petition to investigate SUA in 1997-2000 Lexus LS and GS 400 vehicles, NHTSA cited this report, among its reasons for denying the petition – even though the acceleration systems and the sudden acceleration events studied were completely different from the electronic throttles in the Lexus vehicles and from the circumstances of Boddaert's incidents.

In closing PE04021, the agency hinted that pedal misapplication was the culprit:

> "Complainants report the occurrence of a single incident that often occurs during close quarters vehicle maneuvering (e.g., parking or entering a garage) and thus often results in a crash. During interviews, many complainants are unsure of the details that led up to the incident, such as the position of their right foot and which pedal, if any, they may have actuated or attempted to actuate; a crash occurs and

[79] An Examination of Sudden Acceleration; John Pollard and E. Donald Sussman.; National Highway Traffic Safety Administration; January; 1989

[80] A Simple Case of Sudden Acceleration; Anna Wild Matthews; Wall Street Journal; November 1, 1999

> in the aftermath the operator believes it was caused by the vehicle. In some cases the complainant continues to own and operate the vehicle on a regular basis, often through long periods and distances, without further incident."[81]

SRS interviewed three of the petitioners: Jordan Ziprin, Jeffrey Pepski and William Kronholm. All three indicated that the investigators seemed to come to the interview with a pre-conceived idea about the cause and tended to dismiss any counter-arguments that the driver who experienced the SUA event made.

For example, William Kronholm recalled that the NHTSA investigator asked him if it were possible that he had accidentally hit the gas and the brake at the same time. Kronholm, who experienced two surges in a short period of time when he was returning from a cross-country ski trip, said that he didn't believe that is what happened, but he was willing to test the theory. Kronholm later donned the cross-country ski boots he had been wearing, and took his Tacoma to a safe place to try stepping on both pedals at once. He found out that this was possible – if he twisted his foot uncomfortably at a 90-degree angle. The experiment instantly showed Kronholm that this was not the cause of his SUA incident. He later reported the results of his experiment, but in the *Federal Register* Notice, Kronholm was angry to read: "He subsequently reported that it was possible for him to inadvertently hit both pedals while wearing the ski shoes."[82] Kronholm said that his experiment proved the opposite – it was *not* possible to *inadvertently* hit the two pedals simultaneously.

He also said that the NHTSA investigator causally tossed out the idea that perhaps the similar consumer complaints were created by publicity around the problem. Kronholm said that he was surprised later to read the same theory being advanced by Toyota in its response to the agency:

Toyota disputed the assertion in the petition that the 32 complaints in the NHTSA database "in and of themselves justify opening an investigation. The Tacoma has been the subject of extensive media coverage related to the possibility of sudden acceleration. In addition, there has been a high level of internet activity on this subject as far back as early 2007 including reports by members of Tacoma user groups detailing conversations with ODI staff and providing ODI contact information. Such exposure tends to generate consumer interest and complaints."[83]

Kronholm, a retired Associated Press editor, was angrier still to watch it become a part of the official record, because there was no evidence to support this assertion.

Jeffrey Pepski, the Lexus owner who filed the most recent petition, DP09001, said that when NHTSA investigators examined his Lexus with a Toyota representative, they could not reproduce the event. Pepski's vehicle had been equipped with the original equipment

---

[81] PE04021; Closing Resume; National Highway Traffic Safety Administration; July 22, 2004
[82] DP08001; Denial of Petition; Federal Register Notice; Vol. 72; page 51551; National Highway Traffic Safety Administration; September 3, 2008
[83] DP08001; Toyota Response. Pg. 10-11; April 25, 2008

carpet mats – not the all-weather accessory mats that had been previously determined to be the cause of Toyota SUA. Nonetheless, he says that the agency attempted to persuade him that the floor mat was to blame. He informed them that he attempted to stop the vehicle by pulling up the accelerator pedal with his foot, as well as pushing down on it. He demonstrated how the carpet mat could not have depressed the accelerator if he was pulling up on it. They did not accept his argument.

The agency then tried to buttress its floor mat theory by tying the Pepski incident to Saylor crash in Santee, CA. The results of ODI's inspection of the Lexus in that case – and the conclusion that unsecured all-weather floor mats were to blame – were added to this petition file. Pepski's vehicle was only equipped with the original floor mats. It is unlikely that these two cases are related.

Possible Causes of SUA

Pedal Entrapment and Pedal Misapplication

Pedal entrapment by a floor mat and pedal misapplication most certainly can be causes of unintended acceleration. The role of poor automotive design that leads to floor mat interference, however, can not be discounted as a contributing factor – even though Toyota has blamed drivers.

The blame-the-driver tack was very clear in the agency's 2007 probe into SUA in Lexus vehicles. In one of its submissions to PE07017, Toyota said that it had "found vehicles in which more than one floor mat was installed in the driver footwell at the same time. In such instances, it is possible that the top floor mat could move forward and interfere with the accelerator pedal motion. If it were to cause the accelerator pedal to become stuck in a partially depressed position, then the vehicle could accelerate without the operator's input."[84]

Within that same investigation, the agency, although it concluded that floor mats were the cause, presented ambiguous evidence. A separate post-crash vehicle inspection of a Lexus that had crashed after an SUA event at highway speed found: "All weather mats are installed at all four seating positions. The driver-side all weather mat was found to be installed by itself; it was not on top of another floor mat. The installed mat was found to be unsecured by the retention hooks; *the mat did not interfere with the accelerator pedal in the position it was originally inspected.* The mat was removed from the vehicle. The two retention hooks were found engaged in the flooring material after tile mat was removed. The hooks were intact and did not appear to be damaged from the collision."[85]

But in its final report, the agency said that vehicle owners themselves had noticed instances of pedal entrapment:

---

[84] PE07016; Toyota Response; Christ Tinto ; Toyota Motor Sales ; Response 15; Pg 13; 2007; June 11, 2007

[85] PE07016; Consumer Interview and Vehicle Inspection; National Highway Traffic Safety Administration; August 3, 2007

> "To comprehend the statistical significance of the probability for this event to occur, a survey was sent to a sample size of 1986 registered owners of a 2007 Lexus ES-350 requesting information regarding episodes of unintended acceleration. NHTSA received 600 responses for an overall response rate of 30.2 percent. Fifty-nine owners stated they experienced unintended acceleration. *Thirty-five of those responding also reported that their vehicles were equipped with rubber Lexus all-weather floor mats and several commented that the incident occurred when the accelerator had become trapped in a groove in the floor mat.* Interviews with owners revealed that many had unsecured rubber floor mats in place at the time of the unintended acceleration event, which included in some cases unsecured rubber floor mats placed over existing Lexus carpeted mats."[86]

If the all-weather floor mat is to blame, and pedal entrapment occurs with any frequency, then this is a design problem. And in applying the most recent recall remedies, Toyota has acknowledged this by making significant floor arrangement changes, including shortening the pedal length to allow for more space between the pedal and the floor, removal of padding materials below the floor carpet, and re-designing the floor mats.

In addition, Toyota models lack a pivot point between the accelerator pedal and the stalk. This pivot, found on many other vehicles, may help prevent mat entrapment. Another potential design flaw relates to the retention clips used by Toyota. These clips were notably easy to release and lacked a robust design. At least one manufacturer of after-market all-weather floor mats included redesigned clips with their mats for Toyota and Lexus models.[87]

Electromagnetic interference and Electronic Problems

There is widespread acknowledgement by automakers, electronics experts and suppliers that electronics regularly cause all kinds of headaches for manufacturers and consumers.

At a 2004 industry conference, Mercedes Benz's vice president for electrical and electronics and chassis development, Steven Wolfsreid, "railed against the temptation to overload vehicles with electronic functions that are useless to the customer," according to an *Automotive News* story.[88] The German automaker had removed 600 electronic functions from its vehicles because of quality concerns that were damaging its reputation and ticking off its customers. Electronics are challenging to integrate into a vehicle's electrical architecture, he said in his 20-minute presentation, and what works well in isolation can be a disaster in combination with other electronic components.

Wolfsreid's frustration is a natural outgrowth on the explosion of on-board vehicle electronics. According to a Siemens VDO Automotive report estimate in 2004,

---

[86] EA07010; Final Report: 2007 Lexus ES-350 Unintended Acceleration; Michael Monk; Vehicle Research and Test Center; April 30, 2008
[87] MacNeil Automotive Products, Limited
[88] Mercedes ditches Glitches with Electronics, Georg Auer; Automotive News; May 31, 2004

electronics was the fastest growing sector in the industry with the total value of such systems expected to reach $3.8 billion in 2010. Nonetheless, accompanying the short-term growth spurt in vehicle electronics has been a corresponding rise in the number of warranty claims and defects. JD Powers data has shown that as the number of electronic functions a vehicle has rises, so do the number of defects. German electronics supplier Robert Bosch has reiterated that claim in a trade-publication article on the issue:

> ""There is a direct correlation between the number of electronic functions and the number of defects per vehicle," claims Franz Fehrenbach, chairman of the board of management at Robert Bosch GmbH (Stuttgart, Germany). "If the value of electronics content per vehicle doubles in the next five to 10 years as predicted, it isn't hard to imagine what that means for the number of defects if this trend line holds true."[89]

The increase in microprocessor power, the complexity of software itself exponentially increased by the automotive industry's strategy of creating separate ECUs (each with its own software for each new system) have all contributed to rising warranty costs, tied to vehicle electronics.

While several articles have documented the problems, there has been less written on the solutions. A Peugeot enthusiast website neatly captures the tech/consumer experience, when the electronic glitch is intermittent:

> "Walk into any auto repair shop and ask the mechanics what intermittent electronic problems mean to them, and if and if they don't get real graphic with their answer, then either they don't do electrical repairs, or they have the patience of a saint. At the very least they will tell you that intermittent problems are headaches. A day at the shop might start something like this. The customer tells the service writer that the vehicle works one minute and not the next. The service writer states this on the repair order. The mechanic checks it out and the vehicle operates fine, so no problem found is written on the repair order. The customer gets the vehicle back and the same thing happens. Now the customer has a headache, he goes back to the service writer who also now has a headache. And it doesn't take him to long to give the mechanic a headache. I'll say right now that sometimes no matter how hard all involved work to resolve this problem, it can take some time and patience to find an intermittent problem."[90]

Electronic throttle controls, in particular, are subject to numerous faults. A technical paper published in 1999 by a Siemens researcher on dependability issues enumerates the various faults ETCs can be subject to. For example: "The pedal sensor was considered to be safety-critical. Due to this, the sensors generally are built with redundancy, to be able to detect and to mask appearing faults. Note that common-mode failures like a

[89] Electronic Road Trip; Austin Weber; Assembly Magazine; September 1, 2005
[90] Car Care, Tips and Tricks; Peugeot's Fan Club; http://peugeot.mainspot.net/tips/intermit.shtml

mechanical sensor break has the same effect as they have at Bowden cables, namely stuck at a random sensor value – e.g. at highest value!" [91]

Another possibility is electromagnetic interference. "An electromagnetic incompatibility occurs when a system or equipment interferes with another system or equipment. When this interaction is traced to the transfer of electromagnetic energy from the culprit to the victim, it is termed EMI."[92] This is a well-known phenomenon in many fields that rely heavily on electronics reliability – such as aircraft and medical devices. The possibility of EMI is the reason passengers can not use personal electronic devices during a commercial airline flight. The electronic systems in vehicles are also susceptible to EMI:

"During the early years of ABS's, Mercedes-Benz automobiles equipped with ABS had severe braking problems along a certain stretch of the German autobahn. The brakes where affected by a near-by radio transmitter as drivers applied them on the curved section of highway. The near term solution was to erect a mesh screen along the roadway to attenuate the EMI. This enabled the brakes to function properly when drivers applied them."[93]

Recently, NHTSA promised the public "fresh" look at the possibility of EMI, and said that it would meet with manufacturers, suppliers and independent experts to gain a fuller understanding of current ETC systems, the safety of their designs, and measures to address any possible EMI effects. NHTSA said that if necessary, it will do further research on the topic.[94]

Cracked Throttle Body Shafts

Are some Toyota vehicles experiencing unintended acceleration events because of a parts defect? Possibly. An accusation has been lodged by an anonymous correspondent in Franklin, KY, that Toyota has been aware of a problem with cracked shaft throttle bodies – although for how long, the writer did not say.[95] The accuser, who called himself "A Concerned Citizen," also sent NHTSA's Office of Defect Investigation a used throttle body assembly in which the shaft that controls the throttle blade, situated within the throttle body housing, had a crack on the engine side of the valve, along the long axis of the shaft.[96]

> "There are potentially hundreds of Toyota and Nissan vehicles driving American highways with cracked shaft throttle bodies. Japanese management up to and

[91] Electronic Throttle Control – A Dependability Case Study; Hans Mauser; Journal of Universal Computer Science; October 28 1999
[92] Electronic Systems Failures and Anomalies Attributed to Electromagnetic Interference; R.D. Leach and M.B. Alexander; NASA Reference Publication 1374; July 1995
[93] Electronic Systems Failures and Anomalies Attributed to Electromagnetic Interference; R.D. Leach and M.B. Alexander; NASA Reference Publication 1374; July 1995
[94] Concern Over Electronic Interference Grows; Nick Wingfield; Wall Street Journal; February 4, 2010
[95] Anonymous letter; Concerned Citizen; Franklin, Kentucky; November 27, 2009
[96] NHTSA VOQ 10298108; December 18, 2009

> including company president was aware of the cracked shaft problem and told everyone to be quiet about this problem.
>
> The failure mode on DFMEA for broken throttle shaft is no throttle control and potential wide open acceleration. The Toyota floor mats caused American deaths. Will you sit on this information and possibly cause more American deaths? It bothers me that I did not tell anyone sooner.
>
> I have another throttle body in same condition that can be sent to Automotive News."[97]

Franklin Kentucky is the home of Franklin Precision Industry (FPI), which manufactures throttle bodies for Toyota and Nissan. FPI is part of Aisan Industry Co. Ltd. which, a large automotive supplier based in Japan. Aisan's major shareholders are Toyota Motor Corporation (35 percent) and Toyota Industries Corporation (18 percent).

The cracked throttle shaft problem may be yet another potential contributing factor in some events.

Toyota Response: Illogical and Inconsistent

The ETCS-i

Toyota first introduced Electronic Throttle Control System with Intelligence (ETCS-i) in some 1998 Toyota and Lexus models.[98] With ETCS-i, the throttle valve is opened and closed using a computer controlled throttle actuator instead of the traditional throttle valve cable. The early ETCS-i on some models consisted of a cable controlled accelerator position sensor, throttle control motor with magnetic clutch, throttle position sensor and ECM (Electronic Control Module).[99] According to Toyota, when the accelerator is pressed, the cable moves the accelerator position sensor which sends a signal to the ECM. The ECM then determines how much throttle opening is requested and duty cycles the throttle control motor to open the throttle plate. The throttle position sensor then verifies that the throttle plate is at the correct angle.

[97] Anonymous letter; Concerned Citizen; Franklin, Kentucky; November 27, 2009
[98] Appendix B, Toyota Vehicles with ETCS-i
[99] Training Video Abstract, 1998 Toyota Supra Electronic Throttle Control System; Toyota Motor Sales, Inc.

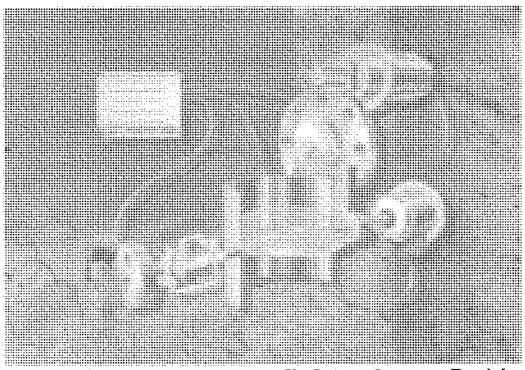

Figure X: ETCSi with Cable Controlled Accelerator Position Sensor (Source: Toyota Motor Sales, Inc.)

In this design Toyota included a mechanical fail-safe mode in the event of a failure in the ETCS-i. Should the ETCS-i malfunction; the magnetic clutch in the control motor will disengage allowing the accelerator cable to magnetically control the throttle.

In 2002 Toyota adopted an ETCS-i system that no longer included the mechanical failsafe.[100] This design was used on vehicles like the Camry. The accelerator throttle cable was replaced by an Accelerator Pedal Position Sensor (APPS).[101] The throttle is controlled by information sent by the APPS to the Throttle Position Sensor (TPS). Each of these sensors includes both main and sub-sensor circuits. Based on the voltage signals from these sensors, the ECM controls throttle operation and activates fail safe modes if needed.

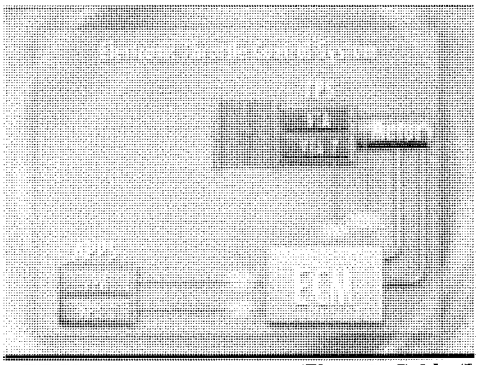

Figure 1: ETCSi without Accelerator Throttle Cable (Linkless) (Source: Toyota Motor Sales, Inc.)

[100] 2002 Camry Engines, Toyota Motor Sales, Inc.
[101] "Camry Engines," Toyota Motor Sales, Inc.

Toyota says that it has built in a failsafe should there be a malfunction in any of these circuits. If one of the two APPS circuits fail, the ECM detects the problem and activates the first fail safe mode which provides an active throttle range from idle to 25 percent of maximum throttle opening. According to Toyota, should the ECM detect that both APPS circuits have failed, the current to the throttle motor is turned off and the force of the return spring causes the throttle valve to return and stay at the prescribed opening and the throttle is fixed at idle. Should either of the TPS circuits fail, the ECM activates a third fail safe mode by varying ignition timing, fuel injection and cylinder operation. At idle, only half of the cylinders are operational. When engine load increases, all cylinders become operational.

[**Appendix C** contains a list of Toyota, Lexus and Scion model vehicles by year that SRS was able to determine have ETCS-i based on a review of Toyota service-related documents.]

Toyota's Notice of the Emerging SUA Problem and the Effort to Shut it Down

Toyota received the first complaints about this new engine surging almost as soon as the 2002 Camrys hit the road. Between February and August 2002, the company got ten complaints from drivers reporting that the engine surged when the vehicle was stopped or the operator already had his foot on the brake.[102] Toyota immediately issued a Technical Service Bulletin to recalibrate the electronic control module for the 1MZ-FE Engine.[103] The bulletin informed service techs that the Camry engine might surge during light throttle input of speeds between 38 - 42 MPH with lock-up On, and noted that the ECM had been re-calibrated to correct the problem. This bulletin is important because it shows that Toyota was aware that engine "surging" (i.e., unintended acceleration) was caused by coding in the ECM – and implemented a fix.

Rather than recalling vehicles, the company chose to issue the fix through its dealers who would only have to repair vehicles for customers who complained. NHTSA was aware of this action. Manufacturers are required to send all technical service bulletins to the agency.[104] In addition, the agency received a copy of this TSB in Toyota's response to PE04021. (Nonetheless, NHTSA closed this investigation, in part, it said, because there were no service bulletins or campaigns that relate to the alleged defect.)

Toyota experienced an unwanted acceleration incident firsthand in April 2003, when a missing retaining clip allowed the center console trim panel to trap the accelerator pedal of a Sienna undergoing production Dynamometer testing.[105] According to Toyota's statements to NHTSA, the automaker reviewed its manufacturing processes and other data and concluded this was an isolated incident. Nonetheless, in June 2003, Toyota

[102] PE04-021; Owner Complaints spreadsheet; Toyota motor Corporation
[103] Technical Service Bulletin EG017-02; Toyota; August 30, 2002
[104] 49 CFR 579.5 (formerly 573.8) requires manufacturers to submit to NHTSA monthly, communications sent to more than one dealer or other party concerning any malfunction. Technical service bulletins (TSBs) are usually covered by that provision.
[105] PE08025; Toyota Response; Chris Tinto ; Reponse 12; Toyota Motor Corporation ; June 25, 2008

changed the design of the trim panel to eliminate the potential for pedal interference if the retaining clip is missing.[106]

In 2003, Toyota began to get more insight into this problem, in the form of defect petitions filed by consumers concerned enough about their own experiences to ask the government to investigate. But, whatever the automaker may have been doing internally to determine a root cause, publicly Toyota has employed several strategies to deflect the agency investigations.

One method was to limit the probe by defining the problem under its own terms. According to a deposition taken in *Alberto v. Toyota*, Christopher Santucci, a former NHTSA Office of Defects Investigations (ODI) investigator and now Toyota's Assistant Manager of Technical & Regulatory Affairs, testified that Toyota and ODI had discussions about the scope of PE04021 early on. Later, in March 2004, ODI investigator Scott Yon wrote a memo stating that the scope of the investigation would be narrowed to eliminate longer duration events where applying the brake pedal didn't stop the vehicle.[107]

In its response to the agency's inquiries in PE04-021, Toyota set its own terms for the words "vehicle surge": "Toyota believes a vehicle surge to be something less than a wide open throttle event but above typical throttle adjustments such as when the air conditioning compressor is activated or power steering assist is required. Also, according to the complainants' own words at the vehicle tended to accelerate at the time of application of the brake pedal. Without physical evidence or electronic codes stored in the vehicle's computers, we believe those incidents to be similar to incidents referenced in other SUA investigations..."[108] In other words, Toyota was also eliminating engine surges that occurred when the driver was applying the brake, or surges in which the vehicle accelerates to a high speed – two types of incidents that Toyota and Lexus owners were complaining about.

Another strategy was to blame media attention for artificially driving up the complaint rate. In its response to Defect Petition 08-001, Toyota told the agency: "The Tacoma has been the subject of extensive media coverage related to the possibility of sudden acceleration. In addition, there has been a high level of Internet activity on this subject as far back as early 2007, including reports by members of Tacoma user groups detailing conversations with ODI staff and providing ODI contact information. Such exposure tends to generate consumer interest and complaints. Thus, the petitioner's assertion that the Tacoma stands out from its peers based on a relatively high number of complaints in the NHTSA database is not a valid argument, since the other vehicles listed by the petitioner have simply not had the same media and Internet exposure."[109]

---

[106] PE08025; Toyota Response; Chris Tinto ; Reponse 12; Toyota Motor Corporation ; June 25, 2008
[107] Deposition of Christopher Santucci; Alberto v. Toyota; December 9, 2009
[108] Complaints Update; PE04021; Scott Yon; National Highway Traffic Safety Administration; March 23, 2004
[109] DP08001; Toyota Response; Chris Tinto; Toyota Motor Corporation; April 25, 2008

When all else failed, Toyota resorted to the least costly recall, with a limited population and an easy-to-install solution: new floor mats. For example, in late March 2007, when ODI opened a Preliminary Evaluation into accelerator pedal interference with accessory all-weather floor mats in 2007 Lexus ES350 vehicles, Toyota tried to apply the brakes to the investigation by issuing a notification to that it would be contacting Lexus customers about proper floor mat usage.[110]

When the investigation moved forward anyway, Toyota issued Recall 07E-082, to replace optional all-weather floor mats in 55,000 Lexus and Toyota and stopped the sale of the Toyota/Lexus All Weather Floor Mat designed for the 2007 and early 2008 model year Camry and ES 350 Lexus vehicles.[111]

Whatever the root cause or causes of unintended acceleration, Toyota has been aware, for at least two years, that drivers who found themselves in a runaway vehicle had no idea how to stop it. Naturally, the first reaction was to stand on the brakes, but repeated application of the vacuum brake system actually rendered it useless. The lack of a proper failsafe was spelled out unequivocally in the Closing Resume of Engineering Analysis 07-010: [112]

> "Stopping the vehicle with unassisted braking while the throttle is fully open requires significant pedal force, which some operators did not, or were unable to, apply for the required duration. Continued driving in this condition results in overheated brakes, which further diminishes the braking effectiveness. Some operators attempted to turn the vehicle off by depressing the engine control button, however they were unaware the button had to be depressed for three seconds to stop the engine when the vehicle is in motion; this functionality was not explained adequately in the owner's manual."[113]

(This is in direct contradiction to Toyota's statements in 2005 that the brakes would overcome any throttle malfunction.) Toyota, however, did not move to implement this solution until late November 2009, when it was showered with negative publicity. The automaker said that as part of the October recall campaign, it would install a brake-to-idle override on a subset of the total recall population: 2007-2010 Lexus ES 350; 2006-2010 Lexus IS 250; 2006 – 2010 Lexus IS 350; 2007-2010 Camry and 2007-2010 Avalon vehicles.

The Recalls

Since 2005, Toyota has issued six recalls to address either floor mat interference or sticking accelerator pedals. Below are summaries of each recall:

---

[110] PE 07016; Toyota Response; Attachment 8; 2007 Lexus ES 350 All Weather Floor Mat; June 11, 2007
[111] Recall 07E-082; Toyota Motor Corporation; September 26, 2007
[112] Closing Resume; EA07-010; National Highway Traffic Safety Administration; October 11, 2007
[113] Closing Resume; EA07-010; National Highway Traffic Safety Administration; October 11, 2007

Recall 05V565

On December 16, 2005 Toyota recalled 3,567 Lexus IS250 vehicles for accelerator pedals which could become stuck in the partially depressed position due to inadequate clearance between the accelerator pedal linkage and a plastic pad embedded in the vehicle's carpet.[114] The pedals were manufactured by Denso.

Recall 07E082

On October 2007, Toyota recalled 55,000 accessory All-Weather floor mats in some 2007 and 2008 Lexus ES 350 and Camry vehicles, equipped with part numbers PT908-33070, PT908-33071, PT908-32070.[115] "Toyota concluded that the mats do not contain a safety-related defect; however, Toyota agrees that an unsecured All Weather Floor Mat, especially one that is stacked on top of another floor mat, can migrate toward the accelerator pedal, potentially preventing it from returning to idle."

Recall 09V023

On January 14, 2009 Toyota recalled 26,501 2004 Siennas for a missing retainer clip.[116] Toyota did not concede that this was a defect, but called the actions a "safety improvement campaign" that is not being conducted under the Safety Act. Toyota's recall instructs dealers to replace the original floor carpet cover with the newer design floor carpet (and retention clip) at no charge to the owner. The repair will reduce the potential for trim panel interference with the accelerator pedal travel should the retaining clips become missing because of improper service or other reasons.

Recall 09V388

On October 5, 2009, Toyota recalled 3.8 million to address potential accelerator pedal entrapment by incompatible or unsecured floor mats.[117] The affected vehicles are 2007-2010 Camry, Tundra and Lexus ES 350 vehicles; 2005-2010 Avalon; 2004-2009 Prius; 2005-2010 Tacoma; 2006-2010 Lexus IS 250. More than a month later, Toyota announces plans to reconfigure the accelerator pedal on 3.8 million vehicles going back to the 2004 model year. Other fixes include modifying the floor area around the pedal and in *some* models, installing a brake-to-idle override that allows the driver to quickly stop a vehicle in an unintended acceleration incident and newly-designed replacement driver- and front-passenger side all-weather mats.

Recall 10V017

---

[114] Recall 05V565; Toyota Motor Corporation; December 16, 2005
[115] Recall 09V388; Toyota Motor Corporation; October 5, 2009
[116] Recall 09V032; Toyota Motor Corporation; January 14, 2009
[117] Recall 09V388; Toyota Motor Corporation; October 5, 2009

On January 22, 2010 Toyota announced Recall 10V017 for sticky accelerator pedals, separate and apart from the floor mat recall.[118] The affected vehicles are: 2009-2010 RAV4; 2009-2010 Corolla; 2009-2010 Matrix; 2005-2010 Avalon; 2007-2010 Camry; 2010 Highlander; 2007-2010 Tundra; 2008-2010 Sequoia.

Recall 10V023

On January 27, 2010 Toyota expanded 09V388 to include more models and model years. Under this campaign, the vehicles would be eligible for re-designed floor mats and modified pedals or pedal replacement.[119] These vehicles would not be outfitted with a brake –to-idle feature. The affected vehicles are 2008-2010 Highlander; 2009-2010 Corolla; 2009-2010 Venza; 2009-2010 Matrix; 2009-2010 Pontiac Vibe

Do the Recalls Address the Root Causes of SUA?

Will any of these campaigns stem the flow of complaints? The evidence, so far, indicates that the answer is: no.

First, Toyota has already tried both remedies: a small pedal recall in 2005 and a floor mat recall in 2007. The latter, all-weather floor mats in a limited number of 2007 and 2008 Lexus vehicles, has not been successful in abating the complaints. According to complaint data, throughout 2009, NHTSA received 14 complaints of SUA from owners of 2007 and 2008 Lexus ES350 vehicles.[120] One of those complaints was from Jeffrey Pepski.

On January 26, 2008, a 2008 Lexus ES350 was in an SUA-related crash in Connecticut. (This incident was not reported to NHTSA, but to Toyota.)

Gary Masi, a Lexus customer in Cos Cob, Connecticut, was driving the vehicle on loan from Lexus of Greenwich, on I-95, when he attempted to brake the vehicle to exit the highway. When Masi realized he could not stop the vehicle, he called the dealership for help, and shifted the vehicle into park. It did not prevent him from crashing into the back of a tractor trailer. An accident report filed by the Connecticut State Police noted that the floor mats were unsecured.[121] Despite the recall, Toyota's claims representative notified Masi in April 2008 that he was at fault for the crash, and they intended to seek compensation for damages to the vehicle from him.[122]

---

[118] Recall 10V017; Toyota Motor Corporation; January 22, 2010
[119] Recall 10V023; Toyota Motor Corporation; January 17, 2010
[120] Appendix D – Consumer complaint to NHTSA 2007 – 2008 MY Lexus ES350 unintended acceleration incidents occurring Jan. 2009 – Jan. 2010; SRS; Jan. 2010
[121] Connecticut Uniform Police Accident Report; Case number 0800042395; Connecticut State Police; January 27, 2008
[122] Toyota Letter to Masi; Cambridge Integrated Services, Inc.; Patricia Dragon; April 8, 2008

Sticky Pedals

Toyota's second line of defense has been an accelerator pedal recall.

In early December 2005, Toyota learned of two early model Lexus IS250 with accelerator pedals "out of tolerance" – meaning the pedal could become stuck. One instance occurred during a dealer pre-delivery inspection and a second was reported by Toyota Canada during transportation at the port facility. The automaker had received no complaints in the U.S. or Canada.[123]

"Toyota investigated the cause of the problem, and found that the accelerator pedal linkage and the floor carpet design were out of tolerance; creating insufficient clearance between the accelerator pedal and the vehicle carpet," the automaker wrote to the National Highway Traffic Safety Administration.[124]

By December 16, Toyota sent a Notice of Defect and Noncompliance to NHTSA and four days later, a notice was sent overnight to dealers instructing them to replace the acceleration pedal assembly with a revised one, and to modify the carpet.

The recall population was limited to 3,567 All-Wheel Drive models built between August 30 and December 2, 2005. According to Toyota's first quarterly recall report in March 2006, all but 325 vehicles had been inspected and repaired.

But this was not the first, nor the last time the agency would hear about sudden unintended acceleration in Lexus IS models. Since 2002 to the present, more than 20 Lexus IS owners complained of SUA events.[125] The agency had fielded complaints from Lexus IS300 owners before the recall to modify the small subset of IS250 vehicles, who told stories like these:

> "Since I have owned the vehicle, I have had two incidents, which both occurred randomly with no prior engine problems or indications of issues with the car, in which as I was accelerating, the gas pedal would continue to press down and pin itself to the floor. Both times, the gas pedal was literally stuck to the floor and not able to be loosened. The first time it occurred, I pulled the emergency brake and jammed on my brake pedal until the gas pedal popped back up after about a minute pinned to the ground. The second time, I luckily had someone with me who instructed me to put the car in neutral and quickly turn off the engine one click so that I could brake and steer myself to safety. Thank God no one was injured in these incidents, but both occurrences could have been horrible accidents."[126]

---

[123] Recall 05V565; Defect Information Report; Chris Tinto; Toyota Motor Corporation; December 16, 2005
[124] Recall 05V565; Defect Information Report; Chris Tinto; Toyota Motor Corporation; December 16, 2005
[125] Appendix E – Consumer complaints to NHTSA of unintended acceleration in Lexus IS models; SRS; Jan. 2010
[126] NHTSA VOQ 10119774; National Highway Traffic Safety Administration; March 1, 2005

More recently, the blame has been laid at the feet of the supplier CTS, an Elkhart IN company.

On January 21, 2010 Toyota issued a recall for "sticky pedals" in approximately 2.3 million vehicles.[127] According to Toyota, no Lexus or Scion vehicles were affected by the pedal problem; nor are Toyota Prius, Tacoma, Sienna, Venza, Solara, Yaris, 4Runner, FJ Cruiser, Land Cruiser, Highlander hybrids and certain Camry models, including Camry hybrids. Camry, RAV4, Corolla and Highlander vehicles with Vehicle Identification Numbers (VIN) that begin with "J" are not affected by the accelerator pedal recall.[128]

Toyota's recall cited a faulty friction device as the cause of unintended acceleration, suggesting that an increase in friction results in a pedal that "is slow to return to the idle position or, in rare cases, the pedal sticks, leaving the throttle partially open."[129] Toyota also warned that a worn pedal mechanism "may become harder to depress, slower to return or, in the worst case, stuck in a partially depressed position." [130]

Beginning in March 2007 the company began receiving field technical information reports that some accelerator pedals were exhibiting "rough operation" and "slow to return to the idle position," according to its submissions to the agency. Environmental testing of the pedal assemblies in the Tundra (allegedly the only model affected at the time) revealed that the material used to make the friction levers in the pedals (PA46), would absorb moisture and swell with humidity. In February of 2008, the material was changed to PPS, and Toyota concluded that "while accelerator pedal feeling could change under certain conditions, Toyota considered it to be a drivability issue unrelated to safety."[131]

In December 2008, Toyota received reports from the European market of sticky accelerators on vehicles with pedals made of the new material. Toyota conducted additional testing and discovered that the accelerator pedal could stick in a partially depressed position should condensation occur on the accelerator pedal. Toyota described the way that the "friction lever interacts with the sliding surface of the accelerator pedal inside the pedal sensor assembly, [such that] the sliding surface of the lever may become smooth during vehicle operation." Under such circumstances, friction may increase, resulting in an accelerator pedal becoming harder to depress. When condensation occurred, it was likely the result of heater operation after the engine was started, and in cold temperatures.[132]

---

[127] NHTSA Recall 10V017; January 21, 2010; Toyota Accelerator Pedal Recall
[128] Toyota Announces Comprehensive Plan to Fix Accelerator Pedals on Recalled Vehicles and Ensure Customer Safety; February 1, 2010. (http://pressroom.toyota.com/pr/tms/toyota/toyota-announces-comprehensive-153311.aspx)
[129] Toyota Press Release: Toyota Answers Customer Questions About The Solution For Sticking Accelerator Pedals; 2010
[130] Toyota Press Release: Toyota Files Voluntary Safety Recall on Select Toyota Division Vehicles for Sticking Accelerator Pedal; January 21, 2010; SUA0398
[131] NHTSA Recall 10V017; January 21, 2010; Toyota Accelerator Pedal Recall
[132] NHTSA Recall 10V017; January 21, 2010; Toyota Accelerator Pedal Recall

In response to its internal probe, Toyota then lengthened the arm of the friction lever and again changed its material to prevent the smoothing of the lever on all vehicles produced in Europe starting in mid-August 2009.[133]

But, in October of 2009, the company received new reports, this time in the U.S. and Canadian markets, of sticking accelerator pedals using the same material friction lever as in the European models.[134]

In January, Toyota announced that it had developed a remedy "that involves reinforcing the pedal assembly in a manner that eliminates the excess friction that has caused the pedals to stick in rare instances." [135] The subsequent recall included vehicles with friction levers made of both PPS, and PA46, the material first associated with rough operation or slow to return symptoms.[136]

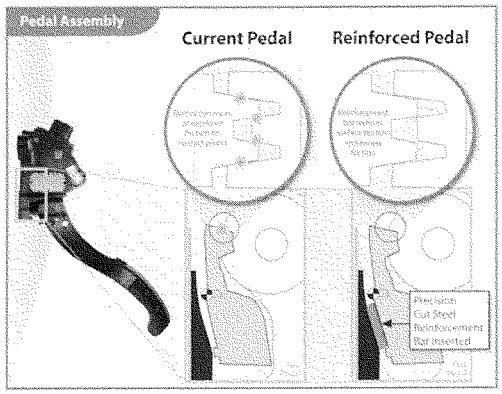

Toyota sticky pedal remedy: A steel reinforcement bar eliminates the excess friction that can cause the pedal to stick (Source: Toyota Motor Sales)

In January, CTS, the pedal assembly manufacturer, expressed "deep concern that there is widespread confusion and incorrect information" regarding the recent Toyota recall, and

[133] NHTSA Recall 10V017; January 21, 2010; Toyota Accelerator Pedal Recall
[134] NHTSA Recall 10V017; January 21, 2010; Toyota Accelerator Pedal Recall
[135] Toyota Announces Comprehensive Plan to Fix Accelerator Pedals on Recalled Vehicles and Ensure Customer Safety; February 1, 2010. (http://pressroom.toyota.com/pr/tms/toyota/toyota-announces-comprehensive-153311.aspx)
[136] NHTSA Recall 10V017; January 21, 2010; Toyota Accelerator Pedal Recall

asserted that the rare "slow return" pedal incidents should not be linked to any sudden unintended acceleration incidents.[137] In a press release, it raised several points in its defense: that unintended acceleration incidents have been occurring in Toyota vehicles at least as far back as 1999, long before CTS supplied accelerator pedals to Toyota. Further, the complaints encompassed vehicle models and model years built with pedals from other suppliers. For example, CTS has never manufactured accelerators for Lexus vehicles and "has no accelerator pedals in Toyota vehicles prior to model year 2005."[138]

CTS also reminded the public that Toyota regarded this recall apart from previous recalls intended to remedy sudden unintended acceleration.[139]

In a February interview with the *Today Show*, Toyota President Jim Lentz told viewers that floor mat entrapment was an issue separate from sticky pedals. The company learned about the sticky pedal problem in late October 2009 of last year, although he also said that Toyota had been investigating the issue for a long time. (According to the recall documents, Toyota first began to receive complaints in March 2007 – two-and-a-half years earlier.) In the interview Lentz was adamant that Toyota has a fix that will solve the problem of a sticky pedal – but did not did link "sticky pedals" to unintended acceleration.[140]

Toyota and CTS agree that sticky accelerator pedals are extremely rare. CTS said that Toyota reported less than a dozen cases of the sticky pedal to the company. But, CTS declared: "in no instance did the accelerator actually become stuck in a partially depressed condition."[141]

Toyota's sticky pedal recall doesn't appear to relate to complaints of SUA. Both the supplier and Toyota's statements about the results of this defect fail to connect the sudden unintended acceleration reported by consumers. Nor can Toyota explain SUA events in Lexus models that are not fitted with the CTS supplied pedals or vehicles outside of the recalls. Many complaints of SUA fall outside of the scope of the recall, the supplier claims that the failure has not caused any crashes nor does the failure lend itself to the types of complaints commonly reported.

Part of Toyota's remedy for recall 09V388 is the addition of a safety feature for some models including the 2007-2010 Camry, 2005-2010 Avalon, 2007-2010 Lexus ES350 and the 2006-2010 Lexus IS250 and IS350. The feature, known as a brake override system, is designed to cut engine power in the case of simultaneous application of both the accelerator and brake pedals.[142] Toyota states in a November 15, 2009 letter to NHTSA that:

> "Although not part of the remedy for addressing the defect identified in Toyota's

[137] CTS Press Release: CTS Comments on Accelerator Pedals; January 29, 2010
[138] CTS Press Release: CTS Comments on Accelerator Pedals; January 29, 2010
[139] CTS Press Release: CTS Comments on Accelerator Pedals; January 29, 2010
[140] MSNBC Today Show Interview; February 1, 2010
[141] CTS Press Release: CTS Comments on Toyota's January 21 Safety Voluntary Recall; January 27, 2010
[142] Recall 09V388, TMS December 1, 2009 letter to All Toyota Dealers (Special Service Campaign 9L)

> Part 573 report, Toyota intends to add a supplemental function to the software for owners of ES, Camry, Avalon, and IS models that will ensure that the brake overrides the accelerator in the event that both pedals are being applied at the same time. This software supplement will reduce the consequences of pedal entrapment, should it occur. It is Toyota's intent to introduce similar software in all new models in the future, as the development work is completed."[143]

In a Toyota Motor Sales USA Inc., memo to its dealers regarding recall 09V388 (aka., 90L), the company states:

> "As an additional measure independent of the vehicle-based recall remedy, you should also install a newly designed override system on non-hybrid Camry vehicles to provide an extra measure of confidence. This system will cut engine power in case of simultaneous application of both accelerator and brake pedals at certain speeds and driving conditions. *The Camry Hybrid already contains a fuel supply cut feature for Hybrid motor protection that achieves a similar result as the override system newly designed for the non-hybrid models.*"[144]

The system Toyota intends to install is also referred to as a Brake-to-Idle feature or "Smart Pedal." This safety feature is designed into vehicles whereby braking by the driver overrides any other input to the throttle, regardless of source. This should allow the driver to control the vehicle quickly in event of an unintended acceleration event, regardless of the root cause.

Based on a news reports BMW is said to have made this feature standard on their vehicles beginning in the 2005 Model Year and Volkswagen in 2001.[145] Technical documents show that Audi began installing the feature in 2000.[146] According to a Chrysler spokesman quoted in the *Washington Post*, the company began using the system in 2003: "If the brake and the accelerator are in an argument, the brake wins."[147]

While the brake-to-idle feature has been around for some time, there is a dearth of documentation on the design and its origins. There is also very little, if any, information in manufacturers' technical materials or in Owner's Manuals of vehicles that do have the brake-to-idle feature installed.

The brake-to-idle feature is noted in a 1998 "Audi Self Study Programme Book." which covers the 2.7-liter V6 Bi-Turbo Engine which was available in the Audi A6 and A4. The guide states:

> "Safety function: For safety reasons, the throttle valve is closed as far as a defined angular position when both the accelerator pedal and the brake pedal are

[143] Recall 09V388, TMNA November 25, 2009 Letter to NHTSA
[144] Toyota Motor Sales USA Inc. Memo RE: Toyota Safety Recall 90L, February 2, 2010
[145] October 7, 2009 NY Times Article: 'Smart Gas Pedals May Solve Floor Mat Problem'
[146] November 25, 2008 Audi Technical Service Bulletin 01 08 16
[147] January 29, 2010 Washington Post, 'Toyota Did Not Install Brake Overrides Systems Despite Complaints"

> depressed. If the brake is pressed first followed by the accelerator pedal, the driver input (torque request) is executed."[148]

An Audi Technical Service Bulletin[149] issued in 2008 that covers the 2000-2008 Audi A6 Quattro Sedans states:

> "With the introduction of Electronic Power Control (EPC) (no accelerator cable) to fuel injection systems, an engine RPM control feature has been incorporated into the engine electronic control system software.
>
> Application of both brake and accelerator pedals at the same time (brake pedal with left foot and accelerator pedal with right foot) results in the following:
> - Brake pedal function (normal at all times) overrides any throttle application.
> - Diagnostic Trouble Codes (DTCs) will not be stored.
>
> If brake pedal is applied while accelerator pedal is depressed, after approximately two seconds, engine RPMs will return to idle speed of 1400 RPMs."

Patents covering the brake-to-idle feature go back as far as 1965. General Motors patent 3,207,276 titled, 'Accelerator Cancelling Pedal' states the following:

> "The present invention relates to a vehicle safety device whereby the effect of accelerator pedal operation on the vehicle throttle is cancelled in the event the vehicle operator simultaneously depresses both the accelerator pedal and the brake pedal with one foot."

General Motors has at least two other Patents that disclose this safety feature.

Regarding Toyota's knowledge of this feature, US Patent 4,779,597 titled, 'Fail-Safe System for Vehicle Engine' and issued to Hitachi, Ltd.[150] discloses a system to prevent a vehicle runaway or engine stall due to a stuck throttle while the engine is in operation. Of interest in this patent is a reference to a Toyota Japanese patent application. This document, JP-B-58-2583, filed in 1975 and published in 1983 discloses the following:

> "Toyota discloses the following, 'a fail-safe system comprising mechanical separation means such as an appropriate clutch between the actuator and the throttle valve, whereby the throttle valve is separated from the actuator by the clutch in the event that the throttle valve has stuck and throttle valve is returned to the full-open position by the force of spring. This prior art system provides satisfactory fail-safe means to the extent that once the throttle valve has stuck, the engine becomes to be idling condition and thus the car is prevented from running away.'"

---

[148] 1998 Audi 2.7L Bi-Turbo Self Study Programme 198
[149] November 25, 2008 Audi Technical Service Bulletin 01 08 16
[150] US Patent 4,779.957

A Confused Public as Toyota Shifts the Blame

Understandably, Toyota owners today find themselves confused by the current stream of contradictory recalls; public pronouncements from the Department of Transportation and Toyota; and news stories that suggest that there are causes beyond pedal entrapment or a stuck accelerator pedal.

The inconsistencies have been abetted by NHTSA, which has not looked deeply enough beyond driver error or mechanical interference, to state – with unshakeable certainty – that the root cause has been found. Their investigatory conclusions may be the result of an historical bias; they are certainly the result of insufficient resources.

NHTSA has conceded this in the Closing Resumes of more than one probe. In denying the 2006 defect petition of Camry owner William Jeffers III, the agency conceded:

> "This in no way implies that we doubt the Petitioner's reported experiences with his vehicle. Rather, the agency simply lacks evidence of a safety related defect in his vehicle or a trend of such defects in the subject vehicles. In view of the foregoing, it is unlikely that NHTSA would issue an order for the notification and remedy of a safety-related defect as alleged by the Petitioner in the subject vehicles at the conclusion of the requested investigation. Therefore, in view of the need to allocate and prioritize NHTSA's limited resources to best accomplish the agency's safety mission, the petition is denied."[151]

The agency's rejection of William Kronholm's Tacoma petition struck a similar note:

> "ODI reviewed the petition, assessed VOQs, interviewed persons who filed VOQs, tested the vehicle, and reviewed Toyota's response to an agency Information Request. The complaints fell into three groups. A majority of the complaints may have involved the Tacoma's throttle control system. Some complaints did not involve a failure of the throttle control system. For the remaining reports, although there may have been an issue with the throttle control system as one possible explanation, we have been unable to determine a cause related to throttle control or any underlying cause that gave rise to the complaint. For those vehicles where the throttle control system did not perform as the owner believes it should have, the information suggesting a possible defect related to motor vehicle safety is quite limited.
>
> Additional investigation is unlikely to result in a finding that a defect related to motor vehicle safety exists or a NHTSA order for the notification and remedy of a safety-related defect as requested by the petitioner. Therefore, in view of the need

[151] DP06001; Denial of Defect Petition; Federal Register Notice; National Highway Traffic Safety Administration March 5, 2007

> to allocate and prioritize NHTSA's limited resources to best accomplish the agency's safety mission, the petition is denied."[152]

But Toyota has created its own problem.

The automaker has ignored customers' real-world experiences and refused – at least publicly – to consider that it has not accounted for all of the ways its electronic throttle systems or the sensors that work in concert with it could malfunction. This insistence on design infallibility has forced the company into the very uncomfortable posture its finds itself today. Toyota has shifted the blame from drivers to its floor mats to its suppliers. It has never conceded that the blame lies in its own designs – be they a floor arrangement that allows a mat to wander freely or an electronic system that can be overcome by random, intermittent faults, and more fundamentally adequate failsafe designs. It is no wonder that the public is confused.

For six years, Toyota consistently denied that vehicle-initiated sudden unintended acceleration can even occur:

> "With regard to allegations of unintended acceleration, *Toyota does not believe that uncontrollable acceleration can occur without the driver applying the accelerator pedal because of the several detection systems described above.* If an abnormal condition occurs, such as the ETC sending the signal to the throttle body to open the throttle without applying the accelerator pedal due to a failure of a component or a malfunction of the system, or if the throttle simply were to open on its own, the system goes into failsafe mode."[153]

The automaker has argued that the electronic throttle control system can not be implicated in any malfunction, unless it is detected by a diagnostic fault code:

> "In case the ECU itself experiences a malfunction and an abnormal throttle control signal is sent to the throttle motor, the above detection system will still work as designed because of built in redundancy. The ECU has two CPUs and these two CPUs are comparing each signal received every 100 milliseconds in order to measure its own functionality. In the event of a multipoint failure (one of the CPUs or any sensor or sensors) the system will go into failsafe mode and illuminate the engine warning lamp because of the built in redundancies in the ETC system."[154]

Further, Toyota has not budged from the assertion that the brake system can overcome an open throttle:

---

[152] DP08001; ; Denial of Defect Petition; Federal Register Notice; Vol. 72; page 51551; National Highway Traffic Safety Administration; September 3, 2008
[153] DP05002; Toyota Response; Chris Tinto; Toyota Motor Company; November 15, 2005
[154] PE04021; Toyota Response; Chris Tinto; Toyota Motor Company; June 19, 2004

"Toyota believes that if the throttle had opened as was alleged by the complainant, and the consumer was applying the brake pedal as stated, the vehicle brakes would have restrained vehicle motion."[155]

"In addition, the brake system and the ETC system are mechanically separated and work independently of each other. *Therefore, even if the ETC system fails, the brake system still works as designed and unintended acceleration cannot occur.* Furthermore, brake systems that fail mechanically leave evidence of their failure after the occurrence and do not return to normal operating conditions by themselves."[156]

"As with any vehicle in production today, the ES350 service brakes are more than adequate in stopping a vehicle with a stuck throttle pedal. Customers would be aware that something is operating in an unusual manner, can apply the brakes and shut off the vehicle, as instructed in their owner's manual.[157]

Simply, Toyota's entire argument is: our system cannot fail. And, if the system can not fail, then the fault lies elsewhere. In 2007, when the agency opened its third Lexus investigation, Toyota blamed customers for stacking all-weather mats on top of the original carpet mats causing pedal entrapment. In its first all-weather floor mat recall 07E082, even as the company filed a defect notice in September 2007, it insisted that there was no defect:

> "Toyota has carefully evaluated the agency's concerns in the defect investigation EA07-010 and has concluded that the subject vehicles do not contain a safety related defect. With respect to the All Weather Floor Mats that are associated with the field incidents reported in EA07-010, Toyota concluded that the mats do not contain a safety-related defect; however, Toyota agrees that an unsecured All Weather Floor Mat, especially one that is stacked on top of another floor mat, can migrate toward the accelerator pedal, potentially preventing it from returning to idle." [158]

Five days after NHTSA closed the last Toyota SUA investigation, DP09001, Toyota issued a press release announcing what it perceived as the regulator's latest vindication:

"The question of unintended acceleration involving Toyota and Lexus vehicles has been repeatedly and thoroughly investigated by NHTSA, without any finding of defect other than the risk from an unsecured or incompatible driver's floor mat," said Bob Daly, TMS senior vice president.[159]

---

[155] PE04021; Toyota Response; Chris Tinto; Toyota Motor Corporation; June 19, 2004
[156] DP05002; Toyota Response; Chris Tinto; Toyota Motor Corporation; November 15, 2005
[157] PE07016; Toyota Response; Christ Tinto ; Toyota Motor Corporation ; Response 15; Pg 13; 2007; June 11, 2007
[158] Recall 07E082; Defect Information Report; Toyota Motor Corporation;
[159] Toyota Begins Interim Notification to Owners Regarding Future Voluntary Safety Recall Related to Floor Mats Letter Confirms No Defect Exists in Vehicles with Properly; Press release; Toyota Motor Company; November 2, 2009

"..no defect exists in vehicles in which the driver's floor mat is compatible with the vehicle and properly secured."[160]

In a letter to its customers, Toyota referred to NHTSA's "extensive technical review" of the issue, including interviews with consumers who had complained of unwanted acceleration, NHTSA concluded that "...the only defect trend related to vehicle speed control in the subject vehicles involved the potential for accelerator pedals to become trapped near the floor by out-of-position or inappropriate floor mat installations."[161]

When consumers who had taken all floor mats out of their vehicle stepped forward to recount their SUA crashes and near-miss experiences, Toyota shifted the focus to sticking accelerator pedals – even though the accelerator is not implicated in any number of SUA incidents in which the driver's foot was on the brake. In January, the president of Toyota's US sales unit confidently declared:

"We know what the problem is. We have the fix. And we're going to take great care of our customers." [162]

Sudden Unintended Acceleration in the age of advanced vehicle electronics is a complex and multi-source problem. If Toyota knows what the problems are, it has not shared them with the public. The fixes – except for the brake to idle feature to be implemented in a select number of vehicles – will not prevent continued complaints of unintended acceleration. And it is long past the time to "take great care" of their customers.

Conclusion

After examining the lengthy and complex public history of SUA in Toyota vehicles, Safety Research & Strategies has concluded:

- SUA is occurring among a wider range of Toyota models and model years than has been investigated or remedied.
- Neither Toyota nor the NHTSA has identified all of the causes of SUA in Toyota and Lexus vehicles. Both have adopted the simplest, mechanical explanation for these incidents.
- Pedal entrapment may be a cause of SUA. The data show that floor mat interference cannot be the only cause.

---

[160] Toyota Begins Interim Notification to Owners Regarding Future Voluntary Safety Recall Related to Floor Mats Letter Confirms No Defect Exists in Vehicles with Properly; Press release; Toyota Motor Company; November 2, 2009

[161] Toyota Begins Interim Notification to Owners Regarding Future Voluntary Safety Recall Related to Floor Mats Letter Confirms No Defect Exists in Vehicles with Properly; Press release; Toyota Motor Company; November 2, 2009

[162] Toyota Owners Barrage Dealers With Calls as Pedal Fixes Shipped; Mike Ramsey; Business Week; February 1, 2010

- Sticking accelerator pedals do not appear to cause the SUA events as reported by drivers.

- NHTSA has not yet conducted a thorough investigation of all possible causes. It has been hampered by decisions to limit data and exclude data which didn't fit its hypotheses. The agency may lack expertise and resources. It has been unduly influenced by its past experiences investigating SUA in mechanical throttle systems. Toyota's electronic system is significantly different and more complex than the older, mechanical systems.

- Toyota has not accepted its responsibility in manufacturing and selling vehicles which have design flaws that can contribute to SUA. It has insisted that its system cannot fail and has blamed drivers and suppliers.

- Toyota's past recalls have been ineffective. Drivers of recalled vehicles, who have applied the remedy, still experience SUA.

- Toyota has not addressed SUA problems in some of the models and model years with the worst complaint records, many of which are not eligible for any of the current remedies.

- In view of the automaker's and the government's inability to isolate all of the causes of SUA, Toyota should immediately implement a brake-to-idle override on all affected models and model years to ensure public safety.

Safety Research & Strategies, Inc.
340 Anawan Street / Suite 200
Rehoboth, MA 02769
Ph. 508-252-2333, Fax 508-252-3137
www.safetyresearch.net

Addendum to Safety Research & Strategies February 5, 2010 report: *Toyota Sudden Unintended Acceleration*

Exclusion of Early Camry Deaths Hamper Later Investigations

NHTSA's decision not to include any but one of the fatal crashes in its official complaints, crash, injury, and death counts in their eight Toyota SUA investigations was a critical decision with serious consequences. By not counting deaths, the SUA investigations appeared to have less urgency and intensity. The impact of omitting the most serious incidents for consideration and further review – particularly in the first two years of NHTSA investigations – has reverberated through the subsequent probes and may have affected the recall remedies and the scope of those recalls.

In the span of six months, from September 2003 to March 2004, there were eight deaths that were alleged to have resulted from sudden unintended acceleration events in 2002-2004 Camry models. All eight deaths were reported to NHTSA via Vehicle Owner's Questionnaires or Early Warning Reporting data in an eight-month-period, beginning April 9, 2004, to the close of 2004. ODI only considered including one of these suspected deaths in any of the investigations. There is no evidence in the public files that ODI further investigated any of these deaths. These fatal incidents – save one noted, but not counted in PE0402I – are not mentioned in any of ODI's Closing Resumes or *Federal Register* notices, which describe, in greater detail, the agency's investigatory steps.

The details of most, as described in the EWR data or ODI narratives, are scant, but each ODI-reported incident alleges an important fact: The vehicle raced out of control without driver input. One of these incidents, described in a Vehicle Owner's Questionnaire contained a compelling detail in an Evansville, Indiana crash:

"When coming out of a parking lot, accelerator stuck, causing the vehicle to accelerate out of control. Vehicle grazed another vehicle, went across a street, grazed a building, and drove straight into another building. Driver was conscious when paramedic arrived… The police report stated the crash was due to a mechanical defect… EMTs at the scene stated both feet were 'jammed' on the brake." [1]

[1] ODI#10065362; April 9, 2004

Handwritten notes on the form state: Stuck Throttle. Engine surges. Toyota Rep. to inspect 5/5/04.[2]

During the six-month period in which these fatal crashes occurred, one investigation into SUA in Lexus LS and GS vehicles (DP03003) was opened and closed.[3] *An investigation specifically into Camry unintended acceleration had been considered but not opened,*[4] and based on another consumer petition,[5] a second investigation focusing on Lexus and Camrys (PE04021) was open – and still in the phase of discussing the parameters of the types of SUA incidents that would be examined.[6] According to a deposition taken in *Alberto v. Toyota*, Christopher Santucci, a former NHTSA Office of Defects Investigations (ODI) investigator and now Toyota's Assistant Manager of Technical & Regulatory Affairs, testified that Toyota and ODI had discussions about the scope of PE04021 early on,[7] prior to March 23rd, when ODI investigator Scott Yon wrote a memo, tossing out instances where the operator was applying the brakes and longer duration events.[8] *These are the scenarios that appear to cover some of these fatal incidents.*

Based on the dates they were reported, NHTSA was informed of at least six – and possibly seven – of these fatal crashes that were alleged to have been caused by unintended acceleration or related to speed control. More troubling is that these reports were received just after the agency made the decision to narrow the scope of the investigation, *but not before they closed it.*[9] [10]

Only one of these fatal incidents – in which a driver launched his Camry off a Las Vegas parking garage deck as he was slowly pulling into a space – is ever mentioned in the course of PE04-021 by the agency or Toyota.

These fatal incidents were not considered in the course of the agency's next investigation (DP05002), which was based on another consumer's petition from July 2005 alleging his 2005 Toyota Camry experienced multiple unintended acceleration events, including one that resulted in a crash. This petitioner also took pains to identify similar reported Camry incidents that NHTSA received.

There is no evidence that NHTSA did anything to investigate these fatalities further or to seriously consider them in their investigations.

---

[2] ODI#10065362; April 9, 2004
[3] DP03003; Closing Resume; September 22, 2003
[4] Letter to NHTSA Kathleen DeMeter from unidentified Camry owner, ODI # 10023329; November 19, 2003.
[5] DP04-003
[6] PE04-021; Opening Resume; National Highway Traffic Safety Administration; March 5, 2004
[7] Deposition of Christopher Santucci; Pg. 283; Alberto v. Toyota; December 9, 2009
[8] Complaints Update; PE04021; Scott Yon; National Highway Traffic Safety Administration; March 23, 2004
[9] PE04021; Closing Resume; National Highway Traffic Safety Administration; July 22, 2004
[10] Table 1: Fatal Incidents Reported to NHTSA 2003-2004; Safety Research & Strategies

In DP05002, Toyota mentions a May 2004 inspection of a vehicle that experienced an SUA event.[11] The timing suggests it is the Evansville, Indiana crash in which the driver was pulled from the vehicle with both feet on the pedal. *The fact that this is a fatal incident is never mentioned, and again, it is not counted in the investigation.*

When did Toyota receive notice of these fatalities? It is clear that the automaker had direct knowledge of the Evansville, Indiana crash. Toyota is also likely to have had early direct knowledge about one that occurred on March 14, 2004 because the complainant stated they contacted the company:

> "My mother and friend started out for church, the friend had come to pick her up when the 2004 Toyota Camry with less than 3000 miles on it was having difficulty shifting into reverse, then when she shifted into drive the car accelerated uncontrollably EST speed on 80 - 92 mile a hour in less than 250 ft when the car hit a mobile home. They hit so hard it moved double wide almost a foot. Killing my mother the passenger and injury to her friend the driver. No air bag deployed and when Toyota was contacted they refused to speak to us. Attorneys have said that Toyota is so big, not cost affective....so I watch and in two years there are many many more now....how many more have to die before something is done."[12]

It is also likely that Toyota was informed of the March 15 crash that occurred in Delray Beach, FL. According to interviews with the family of the driver, Leonard Rubin, the leased vehicle was returned to the dealer after the crash; Mr. Rubin refused to drive it again. Mr. Rubin's son-in-law, Marvin Cohen, reported the incident to NHTSA, and received a return phone call from an agency representative. As he recalls it, the agency said that the evidence in this crash was inconclusive. (Mr. Rubin was never charged in the crash.)[13]

In this context, Toyota's language on June 4, in responding to PE04021, is interesting, to say the least:

"Long duration incidents involving uncontrollable acceleration when brake pedal application had no affect are not within the scope of this investigation…" "In reviewing 8013543 and 10045944, Toyota believes that if the throttle had opened, as was alleged by the complainant, and *the consumer was applying the brake pedal as stated the vehicle brakes would have restrained vehicle motion.* For this reason, we believe that these complaints are unrelated to the failure of the electronic throttle control system, and again consider them as similar to complaints referenced in other SA investigations and, per your memo, outside the scope of this investigation."[14]

---

[11] DP05002; Attachment Response 3 Inspection data; Toyota Motor Corporation;
[12] ODI# 10171110;
[13] Interview with Marvin Cohen; February 16, 2010
[14] PE04021; Toyota Response; Chris Tinto; Toyota Motor Corporation; June 4, 2004

> ODI# 8013543 states: At a stop with brakes applied vehicle suddenly surged forward. Engine raced and rpm's went up to 6000. Consumer shifted to neutral to stop vehicle. Vehicle has Not been examined by dealer.*ak[15]
>
> ODI# 10045944 states: While pulling into a parking space, at 2-4 mph, with my foot on the brake, the car suddenly accelerated at full speed, jumping the curb and hitting a tree with full force. Because of previous concerns with throttle problems noted with the dealership at 1000 and 5000 mile check, I immediately called the Lexus dealership. After a conference call with Lexus roadside assistance and the dealership, my car. Was flat bedded to the dealership. The frontal crash rendered the vehicle undrivable. Radiator damage with leakage of fluid covered a portion of the parking lot. The Lexus dealership said they was no problem with the car. I could have been killed or somebody else live could have been in danger... On the night of the accident I learned by reviewing complaints from the Office of Defect Investigations on the NHTSA web site that the problems have been known by the corporate office of Lexus from as early as January, 2002 in regards to all of the above problems. I also found out there have been two recalls on this vehicle that I was not informed about. I will be requesting an investigation with the Lexus east regional office and discussing this with the Rockville Lexus office. I believe that this car is unsafe to drive." [16]

Why are they talking about these complaints, but not fatalities, in which there was clear evidence that the driver was trying to brake the vehicle before the crash?

These deaths and injuries indicate that Toyota had ample notice of a growing problem – in the form of eight deaths in six months – all of which were reported to NHTSA, and in the public domain, by the end of 2004. It also shows that Toyota knew that in a real-world uncontrolled acceleration event, the brakes were not overcoming a fully open throttle as reported by owners – with the most serious consequences – and yet the company continued to insist that the brakes would always work.

It is always easier to examine these issues in hindsight; however, these deaths occurred so closely together, with similar circumstances and in the same vehicle model. How could this not have gotten Toyota's and the agency's attention at the same time they were investigating unintended acceleration in these vehicles? The decision, early on, to exclude these deaths in 2002-2004 Camrys from the count, grows ever more significant with each subsequent defect petition and each investigation closing that with no finding.

---

[15] ODI# 8013543
[16] ODI# 10045944

Table 1. September 2003-March 2004 Toyota Camry Fatal Incidents Alleging Unintended Acceleration

Date of Incident	ODI Number	Model	MY	Injury	Deaths	Incident Location	Date Received by NHTSA	Incident Description
20030904	10072605	CAMRY	2002	1	1	Wilmington, MA	20040514	Maria Cafua was entering I-93 at exit 39 at 5:30 in the morning when her car suddenly shot across three lanes of travel and was hit, broad side, by another vehicle traveling in the high speed (3rd) lane. Traffic at the time of the accident was light. It is believed that the Camry experienced an un-commanded acceleration causing Mrs. Cafua to lose control resulting in the accident and her death. The Camry has been stored since the accident and no changes have been made to its post accident condition. Vehicle is available for inspection /testing by NHTSA. *AK
20040122	10065859	CAMRY	2002	0	2	Las Vegas, NV	20040409	Witnesses saw my parents vehicle (a 2002 Toyota Camry) coming to a stop and then suddenly accelerate.*ak According to news reports, George and Maureen Yago drove off the fourth floor of a parking deck, while slowly heading into a parking space.
20040314	10171110	CAMRY	2004	2	1	Phoenix OR	20040529	My mother and friend started out for church, the friend had come to pick her up when the 2004 Toyota Camry with less than 3000 miles on it was having difficulty shifting into reverse, then when she shifted into drive the car accelerated uncontrollably est speed on 80 - 92 mile a hour in less than 250 ft when the car hit a mobile home. They hit so hard it moved double wide almost a foot. Killing my mother the passenger and injury to her friend the driver. No air bag deployed and when Toyota was contacted they refused to speck to us. Attorneys have said that Toyota is so big, not cost affective....so i watch and in two years there are many many more now....how many more have to die before something is done. See also 10074472. *dsy *mn; 'difficulty shifting from park to reverse, then upon shifting into drive the car accelerated uncontrollably, would not stop, collided with a mobile home, air bags did not deploy, resulting in the death of one passenger and injury of driver *la Fatal victim: Ethyl Marlene Foster.
20040315	10094578	CAMRY	2003	1	1	Delray, FL	20041215	While in a parking lot and backing out of a parking space vehicle accelerated, hitting a pedestrian. *ak Leonard Rubin incident. Blossom Malick fatal victim.
20040316	10065362	CAMRY	2003	0	1	Evansville, IN	20040429	When coming out of a parking lot accelerator stuck, causing the vehicle to accelerate out of control. Vehicle grazed another vehicle, went across a street, grazed a building, and drove straight into another building. Driver was conscious when paramedic arrived. They found the driver with both feet still on the brake pedal. Driver was transported to the hospital, and later died due to fatal injuries from the crash. The insurance company preserved the vehicle as evidence. The police report stated the crash was due to a mechanical defect. *AK *nm Juanita Grossman crash.
20040316	EWR	CAMRY	2003	0	1	South Attleboro, MA	20040800 (approximate)	According to a news account, 83-year-old man collapses and dies of a heart attack *after* crash. This report is found in Toyota's EWR 2004 second quarter report to NHTSA in which the company coded this incident as "speed control" related. Matthew Raraus crash
20040514	10073168	CAMRY	2002	1	1	Honolulu, HI	20040526	A Toyota Camry 2002 driven by a 68 year old lady was parked, and then crashed into a storefront after going forward. Backed into traffic 40 feet away, struck vehicles, and went forward again killing pedestrian as well. Case under investigation. Recent accident. Previous reports of sudden acceleration. All Camrys should be recalled before more loss of life. Possible power train/automatic transmission problems."

Safety Research & Strategies, Inc.
340 Anawan Street / Suite 200
Rehoboth, MA 02769
Ph. 508-252-2333, Fax 508-252-3137
www.safetyresearch.net

Appendix A: ***Unintended Acceleration Incidents Reported 1999-January 19, 2010 Involving Vehicles Outside of the Recall Populations***

The attached appendix is comprised of incidents of unintended acceleration occurring in vehicles outside of the scope of the six Toyota floor mat and accelerator pedal recalls. Sources for these incidents include:

- Consumer complaints to NHTSA
- Toyota-submitted claims from several NHTSA investigations into SUA
- Incidents reported by media organizations
- Consumer contacts made to Safety Research & Strategies, Inc., and other organizations who are reporting incidents that they have received.

We have reviewed all of the complaints in the database and, using the details provided in the incident descriptions, coded every field possible. We focused particularly on date of incident, vehicle make, model, and model year, whether or not an incident resulted in a crash, and injury and death counts. In cases where NHTSA had already coded those fields, we relied on their coding unless the incident descriptions provided clear contradictions.

Every effort has been made to identify duplicate records and combine them; however, often the reports do not provide enough detail to link incidents to other reports; there are likely some duplicates among our records – if there are, they are few.

In order to limit these incidents to only those occurring in non-recalled vehicles, we reviewed the vehicle make, model, model year, and, when necessary, VIN, in order to determine the recall status of the vehicles involved in the incidents. When model year was not known for vehicles that were included in one or more recalls, we excluded the associated records. This resulted in 1,122 incidents of unintended acceleration involving vehicles outside of the recalls.

Toyota ID No:
NHTSA ODI No: 10004640
Date of Incident: 19980101
Vehicle: 2002 TOYOTA CAMRY
Location of Incident: POMPANO BEACH, FL
NHTSA Summary:
CONSUMER STATED WHILE PULLING INTO A PARKING SPACE, AND WITHOUT ANY INDICATION VEHICLE ACCELERATED, JUMPING OVER PARKING BLOCK AND KNOCKING DOWN A TREE. DEALER AND MANUFACTURED HAD BEEN CONTACTED. PLEASE PROVIDE FURTHER INFORMATION.*JB
Additional Summary:

Toyota ID No:
NHTSA ODI No: 10119800
Date of Incident: 19010101
Vehicle: 2002 TOYOTA AVALON
Location of Incident: ITHACA, NY
NHTSA Summary:
2002 TOYOTA AVALON EXPERIENCED SUDDEN ACCELERATION AFTER CRUISE CONTROL WAS DISENGAGED.***NO ANSWER REQUIRED***.*MR. THE FIRST INCIDENT OF SUDDEN ACCELERATION CAUSED THE VEHICLE TO IMPACT LOW TREE BRANCHES WHICH SCRATCHED THE HOOD OF THE VEHICLE. THE SECOND INCIDENT RESULTED IN NO DAMAGE. *NM
Additional Summary:

Toyota ID No:
NHTSA ODI No: 10171210
Date of Incident: 19010101
Vehicle: 2002 TOYOTA CAMRY
Location of Incident: SAN JUAN CAPISTRANO, CA
NHTSA Summary:
LITIGIOUS ALTHE 2001-2005 TOYOTA CAMRY, SOLORA, AND LEXUS AUTOMOBILES, REQUEST NHTSA DO A FULL INVESTIGATION ON THESE VEHICLE RE SUDDEN ACCELERATION. *TS WHILE DRIVING THE VEHICLE ACCELERATED SUDDENLY AND RESULTED IN AN ACCIDENT. *NM
Additional Summary:

Toyota ID No:
NHTSA ODI No: 10140014
Date of Incident: 19010101
Vehicle: 2003 TOYOTA CAMRY
Location of Incident: HUNTINGTON, NY
NHTSA Summary:
2003 TOYOTA CAMRY LURCHED FORWARD ON OCCASIONS CAUSING DAMAGE TO THE VEHICLE. THE AIR BAGS FAILED TO DEPLOY DURING ACCIDENT. *KB. WHILE PARKING, ON TWO SEPARATE OCCASIONS, THE VEHICLE LURCHED FORWARD WHILE THE CONSUMER WAS PULLING INTO A PARKING SPACE. EACH TIME THE CONSUMER'S FOOT WAS ON THE BRAKE PEDAL PREPARING TO STOP. DURING THE SECOND OCCURRENCE THE CONSUMER'S HUSBAND HEARD THE ENGINE REV FROM NEAR IDLE SPEED TO VERY HIGH RPM'S, AT OR CLOSE TO THE MAXIMUM RPM. THE VEHICLE HIT A TREE. *NM
Additional Summary:

Toyota ID No:
NHTSA ODI No: 10166955
Date of Incident: 19010101
Vehicle: 2006 TOYOTA CAMRY
Location of Incident: GARNER, NC
NHTSA Summary:
PETITION FOR DEFECT INVESTIGATION INTO MODEL YEAR 2002 THROUGH 2006 TOYOTA CAMRY SOLARA VEHICLES FOR INCIDENTS RELATING TO VEHICLE SURGING. *TS. THE CONSUMER EXPERIENCED SUDDEN ACCELERATION IN HIS VEHICLE. *JB
Additional Summary:

Toyota ID No:
NHTSA ODI No: 10125854
Date of Incident: 19010101
Vehicle: 2004 LEXUS ES330
Location of Incident: FOUNTAIN INN, SC
NHTSA Summary:
CONSUMER IS REQUESTING INFORMATION REGARDING THE STATUS OF THE REVIEW OF THE 2004 LEXUS EX 330 ACCELERATION DELAY PROBLEM.*MR. THE CONSUMER EXPERIENCES AN ACCELERATION DELAY WHILE DRIVING THE VEHICLE. WHEN THE CONSUMER SLOWED THE VEHICLE DOWN, LIKE WHEN APPROACHING A HIGHWAY ON RAMP, THEN ACCELERATED TO GET INTO TRAFFIC, THERE WAS AN 1.5 SECOND DELAY BEFORE THE VEHICLE WOULD ACCELERATE. *NM
Additional Summary:

Toyota ID No:
NHTSA ODI No: 10147359
Date of Incident: 19010101
Vehicle: 2004 LEXUS LS430
Location of Incident: NEWELL, NJ
NHTSA Summary:
THE CONSUMER'S 2004 LEXUS LS 430 HESITATED INTERMITTENTLY WHILE ACCELERATING TO ENTER A HIGHWAY. *NM THE VEHICLE WAS TAKEN TO THE DEALER TWICE AND ALL THEY SAID WAS THAT THE VEHICLE HAD TO LEARN THE CONSUMER'S DRIVING HABITS AND IT WOULD CORRECT ITSELF. THEY ALSO SAID THE WOULD BURN SOMETHING INTO THE COMPUTER BOARD. THE VEHICLE HESITATED AGAIN WHILE THE CONSUMER WAS MAKING A LEFT TURN FROM A VERY LOW SPEED. AFTER A FEW SECONDS THE VEHICLE FINALLY ACCELERATED BEFORE THE VEHICLE WAS HIT BY ONCOMING TRAFFIC. *NM
Additional Summary:

Toyota ID No:
NHTSA ODI No: 10165853
Date of Incident: 19010101
Vehicle: 2004 LEXUS RX330
Location of Incident: BAKERSFIELD, CA
NHTSA Summary:
2004 LEXUS RX330 HESITATES WHILE DEPRESSING THE ACCELERATOR. *KB. THE VEHICLE HAS BEEN TAKEN TO THE DEALER SEVERAL TIMES TO ALLEVIATE THE PROBLEM BUT THEY CLAIMED THAT THE VEHICLE WAS OPERATING WITHIN NORMAL SPECIFICATIONS. THE VEHICLE HAS ALSO BEEN PLAGUED BY OTHER MALFUNCTIONS TO INCLUDE

SQUEAKS, RATTLES, MULTIPLE MALFUNCTIONS OF THE SUNROOF ELECTRONICS, BROKEN SEATS AND LIFTGATE ALIGNMENT PROBLEMS. *NM UPDATED 08/14/06. *JB
Additional Summary:

Toyota ID No:
NHTSA ODI No: 10019955
Date of Incident: 19010101
Vehicle: 2003 TOYOTA TOYOTA
Location of Incident: BOYNTON BEACH, FL
NHTSA Summary:
NAR 9-10-03. FORA EMAIL FWD FM KOSTGIC INQUIRING HOW MANY 2003 TOYOTAS HAVE HAD A PROBLEM OF ACCELERATING WHILE THE BRAKE IS BEING APPLIED, ES HAVE NO RECORD. *CS
Additional Summary:

Toyota ID No:
NHTSA ODI No: 10070020
Date of Incident: 19991006
Vehicle: 2000 TOYOTA AVALON
Location of Incident: OCEANSIDE, CA
NHTSA Summary:
PROBLEMS WITH CONSUMER GETTING LOCKED IN VEHICLE AS WELL AS BRAKE PROBLEMS. *MR. THE PROBLEM HAD BEEN PRESENT SINCE THE VEHICLE WAS PURCHASED. THE STEERING WHEEL WOULD NOT TURN, NEITHER WOULD THE KEY TURN THE IGNITION. THE BRAKE PROBLEM REMAINED UNRESOLVED. ON ANOTHER OCCASION THE CONSUMER TRIED TO SLOW DOWN TO MAKE A TURN AND THE VEHICLE ACCELERATED UNCONTROLLABLY. THE ONLY WAY THE VEHICLE WOULD STOP, WAS TO TURN THE KEY AND THE SHUT THE MOTOR OFF. THE VEHICLE LOST POWER WHEN BACKING OUT OF A PARKING SPACE. THE IGNITION PROBLEM WAS INTERMITTENT AND THE BRAKE PROBLEM WAS INTERMITTENT. *SC *JB
Additional Summary:

Toyota ID No:
NHTSA ODI No: 10051966
Date of Incident: 19991010
Vehicle: 2000 TOYOTA CAMRY
Location of Incident: ANN ARBOR, MI
NHTSA Summary:
BOTH BRAKE PEDAL AND ACCELERATOR PEDAL ARE DESIGNED TOO CLOSE TOGETHER. FEEL FREE TO PROVIDE ANY FURTHER INFORMATION.*AK
Additional Summary:

Toyota ID No:
NHTSA ODI No: 717009
Date of Incident: 19991120
Vehicle: 2000 TOYOTA SIENNA
Location of Incident: CYPRESS, TX
NHTSA Summary:
LOCATION:PARKING LOT, RAINING, TIRES LOST TRACTION AND ACCELERATOR STUCK ON FULL, BRAKES WOULD NOT FUNCTION, THE VEHICLE PROPELLED FORWARD GLANCING OFF THE BACK OF A FULL SIZED PICKUP AND DEFLECTED INTO A SUBURBAN

WHERE IT FINALLY STOPPED. NO ONE WAS HURT BUT THIS SITUATION COULD HAVE BEEN VERY SERIOUS IF ANYONE HAD BEEN NEAR.(BECAUSE) HAD VERY LITTLE CONTROL(STEERING ONLY). *AK
Additional Summary:

Toyota ID No:
NHTSA ODI No: 459713
Date of Incident: 20000206
Vehicle: 2000 TOYOTA CAMRY
Location of Incident: ORLANDO, FL
NHTSA Summary:
WHEN DRIVING AT A LOW RATE OF SPEED AND PULLING INTO A PARKING SPACE WITH FOOT DEPRESSED ON THE BRAKE PEDAL VEHICLE CONTINUED TO MOVE, CAUSING UNWANTED ACCELERATION AND EXTENDED STOPPING DISTANCE. CONSUMER HAS CONTACTED THE DEALER. DEALER SAID THAT A BRAKE LIGHT WAS ON AND THAT THE COMPUTER CODES SAID BRAKE DEPRESSED AND FRONT WHEELS SPINNING, BUT WOULDN'T WRITE IT ON THE REPAIR TICKET FOR LEGAL REASONS. *AK *ML
Additional Summary:

Toyota ID No:
NHTSA ODI No: 718792
Date of Incident: 20000213
Vehicle: 2000 TOYOTA CAMRY
Location of Incident: CINCINNATI, OH
NHTSA Summary:
DURING A VERY HEAVY RAIN, I WAS DRIVING THE VEHICLE UP A MODERATELY STEEP HILL AT 40MPH WITH A CONSTANT PRESSURE TO THE ACCELERATOR. THE VEHICLE SUDDENLY BEGAN LOSING POWER AND SLIGHTLY DECELERATED. I INCREASED THE FOOT PRESSURE ON THE ACCELERATOR. THE ENGINE THEN WOUND UP AND A HIGH PITCHED, CONSTANT WHINE CAME FROM IT. AT THE CREST OF THE HILL, THE RPMS DROPPED, THE WHINE CEASED, AND THE VEHICLE RESUMED ITS NORMAL ACCELERATION. IMMEDIATELY AFTER THAT, I HEARD A RATTLING NOISE FROM THE UNDERCARRIAGE AROUND THE FRONT DRIVER SEAT AREA. IT SOUNDED LIKE METAL RANGING ON METAL. IT STOPPED AFTER A FEW SECONDS. EARLIER IN THE EVENING, MY WIFE HAD DRIVEN THE VEHICLE IN THE SAME HEAVY RAIN AND NOTED THE SAME PROBLEMS WHILE DRIVING ON THE INTERSTATE AT APPROXIMATELY 50 MPH ON A LEVEL ROADWAY. THE VEHICLE WAS CHECKED BY THE DEALER ON 2/14, BUT THEY WERE UNABLE TO DUPLICATE THE ENGINE PROBLEM, NOR SAW ANY LOOSE COMPONENTS ON THE UNDERCARRIAGE. *AK
Additional Summary:

Toyota ID No:
NHTSA ODI No: 687476
Date of Incident: 20000515
Vehicle: 2000 LEXUS GS300
Location of Incident: BAYONNE, NJ
NHTSA Summary:
VEHICLE ACCELERATED AT SLOW SPEEDS OF 25 MPH, AND ENGINE REVVED. THIS HAS HAPPENED 4 TIMES. TOOK VEHICLE TO DEALER, WHO COULD NOT REMEDY SITUATION. *AK.
Additional Summary:

Toyota ID No:
NHTSA ODI No: 872737
Date of Incident: 20050811
Vehicle: 2000 LEXUS GS400
Location of Incident: CUPERTINO, CA
NHTSA Summary:
WAS DRIVING VEHICLE & STARTED TO PRESS DOWN ON BRAKES AND VEHICLE SUDDENLY ACCELERATED WITHOUT WARNING. TOOK VEHICLE TO DEALERSHIP & MECHANIC COULD NOT LOCATE CAUSE OF ACCELERATION. 2ND TIME PROBLEM, NOT DUPLICATED AFTER IT HAPPENED PRIOR TO TAKING TO DEALERSHIP. HAD HAPPENED 4 DIFFERENT TIMES SINCE THEN & PROBLEM WAS GETTING WORSE. MECHANIC DID NOT KNOW CAUSE OF ACCELERATION.*AK
Additional Summary:

Toyota ID No:
NHTSA ODI No: 875553
Date of Incident: 20060903
Vehicle: 2000 LEXUS RX300
Location of Incident: PIMMOUNT, CA
NHTSA Summary:
WHEN CHANGING LANES STEERING WHEEL WENT INTO OPPOSITE DIRECTION, RESULTING IN A COLLISION. DEALER HAS INSPECTED VEHICLE, AND HAS NOT BEEN ABLE TO DUPLICATE OR CORRECT PROBLEM. MANUFACTURER HAS BEEN NOTIFIED. THROTTLE WAS STICKING. SPEAKER FAILED. CONSUMER HEARD A RATTLING NOISE IN RIGHT FRONT DASH AREA. DEALER REPLACED THE GLOVE COMPARTMENT. *AK *SLC
Additional Summary:

Toyota ID No:
NHTSA ODI No: 876197
Date of Incident: 20060925
Vehicle: 2000 TOYOTA CAMRY
Location of Incident: BOSSIER CI, LA
NHTSA Summary:
THREE WEEKS AFTER PURCHASING THE VEHICLE, CONSUMER COMPLAINED THAT THE ENGINE WAS RUNNING ROUGH AND IRREGULARLY. AT THAT TIME THE DEALER WAS UNABLE TO INSPECT THE VEHICLE, SOON AFTER THE CONSUMER WAS INVOLVED IN AN ACCIDENT IN WHICH SHE WAS UNABLE TO STOP THE VEHICLE. A WEEK AFTER THE ACCIDENT CONSUMER RECIEVED NOTIFICATION WHICH ADVISED OF A DEFECTIVE CRUISE CONTROL THROTTLE LINKAGE CLIP. CONSUMER BELIEVES THE DEFECT CAUSED THE ACCIDENT (ATTORNEY FOR CLIENT). NLM
Additional Summary:

Toyota ID No:
NHTSA ODI No: 8015367
Date of Incident: 20050930
Vehicle: 2001 LEXUS IS300
Location of Incident: HUNTINGTON STATION, NY
NHTSA Summary:
WHILE DRIVING VEHICLE WOULD HESITATE WHEN ACCELERATING. VEHICLE BEEN TO DEALER ON THREE OCCASIONS, AND PROBLEM REOCCURRED. FEEL FREE TO PROVIDE ANY FURTHER INFORMATION.*AK

Additional Summary:

Toyota ID No:
NHTSA ODI No: 878012
Date of Incident: 20001025
Vehicle: 2000 TOYOTA ECHO
Location of Incident: LONG ISLAND, NY
NHTSA Summary:
WHILE APPLYING BRAKES VEHICLE ACCELERATED SUDDENLY AND UNEXPECTEDLY. DRIVER PUT VEHICLE INTO PARK TO STOP IT. DEALER WAS INSPECTING VEHICLE.*AK
Additional Summary:

Toyota ID No:
NHTSA ODI No: 879102
Date of Incident: 20051025
Vehicle: 2001 TOYOTA TACOMA
Location of Incident: SACRAMENTO, CA
NHTSA Summary:
CONSUMER WAS TRAVELING IN RAINY CONDITIONS AT 30MPH AND WITHOUT ACCELERATION FRONT MLID ACROSS ROAD INTO ANOTHER VEHICLE. NO INJURIES. TOYOTA HAS INSPECTED VEHICLE BUT DID NOT TEST DRIVE IT. EVERYTHING MET REQUIREMENTS, BUT NOTHING ELSE COULD BE DONE FOR CONSUMER.*AK *YD
Additional Summary:

Toyota ID No:
NHTSA ODI No: 877195
Date of Incident: 20001120
Vehicle: 2000 LEXUS RX300
Location of Incident: LAKE CHARLES, LA
NHTSA Summary:
VEHICLE EXPERIENCED SUDDEN ACCELERATION IN REVERSE AND HIT A POLE. GEAR SHIFT WAS STUCK IN REVERSE AND COULD NOT SHIFT INTO DRIVE. THE ENGINE TORQUED UP AND ACCELERATED FORWARD, CAUSING VEHICLE TO CRASH INTO A BRICK WALL. CONSUMER SUSTAINED WHIPLASH DUE TO THE ACCIDENT. *SLC
Additional Summary:

Toyota ID No:
NHTSA ODI No: 737644
Date of Incident: 20001209
Vehicle: 2000 TOYOTA TUNDRA
Location of Incident: PINELLAS PARK, FL
NHTSA Summary:
ACCELERATOR WENT DOWN TO THE FLOOR AS IF THE CRUISE CONTROL TOOK OVER. AIRBAGS DID NOT DEPLOY ON IMPACT.*AK
Additional Summary:

Toyota ID No:
NHTSA ODI No: 876387
Date of Incident: 20001212

Vehicle: 2001 TOYOTA COROLLA
Location of Incident: PROSPECT HEIGHTS, IL
NHTSA Summary:
WHILE TRAVELING ON HIGHWAY AT 45 MPH APPLIED ACCELERATOR PEDAL TO PASS, AND ACCELERATOR PEDAL REMAINED STUCK TO THE FLOOR AND WOULD NOT RETURN, CAUSING VEHICLE TO SUDDENLY TAKE OFF. CONSUMER WAS ABLE TO SWITCH OFF VEHICLE, AND COACH ONTO THE SIDE OF ROAD. DEALER WAS NOT CONTACTED AT THIS TIME. PLEASE FEEL FREE TO PROVIDE ANY FURTHER DETAILS ON THIS MATTER. *AK
Additional Summary:

Toyota ID No:
NHTSA ODI No: 742890
Date of Incident: 20010102
Vehicle: 2000 TOYOTA CAMRY
Location of Incident: GETTYSBURG, PA
NHTSA Summary:
DEALER SAYS THAT THROTTLE STICKING IS THE NORM FOR CAMRYS AND IS NOT A DRIVE TRAIN PROBLEM AND NOT WARRANTED.*AK
Additional Summary:

Toyota ID No:
NHTSA ODI No: 765462
Date of Incident: 20010115
Vehicle: 2001 LEXUS ES300
Location of Incident: FAIRFAX, VA
NHTSA Summary:
STICKING ACCELERATOR. *AK
Additional Summary:

Toyota ID No:
NHTSA ODI No: 880752
Date of Incident: 20010214
Vehicle: 2000 TOYOTA CAMRY
Location of Incident: GAITHERSBURG, MD
NHTSA Summary:
WHILE DRIVING ABOUT 30 MPH ENGINE SUDDENLY ACCELERATED WITHOUT A PRIOR WARNING.CONSUMER HAD TO TURN OFF ENGINE AND PUT PARK IN NEUTRAL. VEHICLE THEN STOPPED. AVOIDING A CRASH INTO A CROW. DEALER SAID THAT THROTTLE CABLE WAS THE PROBLEM. *AK
Additional Summary:

Toyota ID No:
NHTSA ODI No: 742830
Date of Incident: 20010221
Vehicle: 2001 LEXUS RX300
Location of Incident: CARLSBAD, CA
NHTSA Summary:
FOOT SOLELY ON BRAKE AS VEHICLE COMING TO A STOP IN PARKING SPOT SUDDENLY WITH NO REASON ACCELERATED OVER-RIDING THE PRESSURE ON THE BRAKE-JUMPING THE CONCRETE STOP-KNOCKING OVER PARKING POST AND SIGN AND COMING TO A STOP

JUST HITTING THE OPPOSING VEHICLES LEFT FRONT WHEEL WELL DOING DAMAGE TO IT AND TO MY CAR.
Additional Summary:

Toyota ID No:
NHTSA ODI No: 761171
Date of Incident: 20010223
Vehicle: 2000 LEXUS RS300
Location of Incident: EAST RUTHE, NJ
NHTSA Summary:
WHILE BACKING INTO GARAGE THE VEHICLE SUDDENLY ACCELERATED RACEWARDS STRIKING SEVERAL ARTICLES STORED IN THE GARAGE. THE VEHICLE SUFFERED EXTENSIVE DAMAGE TO THE REAREND AND LEFT REAR QUARTER PANEL. THE DRIVER SUFFERED NECK AND LOWER BACK DISCOMFORT BUT REQUIRED NO MEDICAL ATTENTION. THIS PROBLEM OCCURED ONCE BEFORE WHILE BACKING INTO GARAGE BUT WITHOUT INCIDENT. NLM
Additional Summary:

Toyota ID No:
NHTSA ODI No: 888671
Date of Incident: 20010314
Vehicle: 2000 TOYOTA CAMRY
Location of Incident: BALTIMORE, MD
NHTSA Summary:
WHILE TRAVELING AND WITHOUT ANY INDICATION VEHICLE WOULD IDLE HIGH, CAUSING CONSUMER TO DEPRESS BRAKE PEDAL AND VEHICLE WOULD STILL TRAVEL, RESULTING IN CONSUMERS VEHICLE TO RUNNING INTO SOMETHING.*AK CONSUMER STATES SHE HIT ANOTHER VEHICLE IN FRONT OF HER. DELAERSHIP WAS UNABLE TO DUPLICATE THE PROBLEM ON BOTH OCCASIONS.*SB
Additional Summary:

Toyota ID No:
NHTSA ODI No: 8001440
Date of Incident: 20010401
Vehicle: 2001 TOYOTA SEQUOIA
Location of Incident: FORT COLLINS, CO
NHTSA Summary:
WHEN ACCELERATING FROM A COMPLETE STOP THERE WAS A HESITATION IN ENGINE. THIS HESITATION ALMOST RESULTED IN SEVERAL VEHICLE CRASHES. DEALERSHIP HAS EXAMINED VEHICLE, BUT COULD NOT DUPLICATE THE PROBLEM. INFORMED CONSUMER THIS HESITATION WAS NORMAL. PLEASE PROVIDE ANY ADDITIONAL INFORMATION / DOCUMENTATION. *AK
Additional Summary:

Toyota ID No:
NHTSA ODI No: 752241
Date of Incident: 20010402
Vehicle: 2001 TOYOTA RAV4
Location of Incident: WINONA, MN
NHTSA Summary:

THE 2001 TOYOTA RAV4 HAS A SIGNIFICANT HESITATION PROBLEM UPON ACCERATION RESULTING IN, MY OPINION, AN EXTREMELY UNSAFE VEHICLE. AT RANDOM TIMES THERE IS VIRTUALLY NO POWER PRODUCED BY THE ENGINE FOR APPROX. 5-10 SECONDS WHEN THE ACCELERATOR IS DEPRESSED. THIS RESULTS IN A VERY DANGEROUS SITUATION WHEN IN HEAVY TRAFFIC. THE DEALER, ADMITTING THERE IS A PROBLEM, CLAIMS THEY HAVE NO IDEA WHAT CAUSES IT. SOR INFR TOYOTA. I HAVE NARROWLY MISSED BEING HIT BY OTHER TRAFFIC WHEN I EXPECTED THE VEHICLE TO SMOOTHLY ACCELERATE OUT OF HARMS WAY WHEN IT DID NOT.*AK
Additional Summary:

Toyota ID No:
NHTSA ODI No: 558732
Date of Incident: 20010501
Vehicle: 1998 TOYOTA SIENNA
Location of Incident: CHARLOTTESVILLE, VA
NHTSA Summary:
THERE WAS A SUDDEN DECREASE IN ACCELERATION WHILE IN CRUISE CONTROL, AND AN UNUSUAL NOISE.*AK
Additional Summary:

Toyota ID No:
NHTSA ODI No: 588046
Date of Incident: 20010508
Vehicle: 2000 TOYOTA CAMRY
Location of Incident: PLYMOUTH, MI
NHTSA Summary:
WHILE DRIVING AT APPROXIMATELY 10 MPH AND TURNING A CORNER VEHICLE ACCELERATED SUDDENLY. CONSUMER LOST CONTROL OF VEHICLE, AND VEHICLE ROLLED TWICE. DEALERSHIP HAS NOT GIVEN A REASON FOR THE DEFECT IN THIS VEHICLE. *AK CONSUMER STATES VEHICLE GOT UP TO BETWEEN 70 AND 80 MPH WITHIN 2 MINUTES. CONSUMER WAS INJURED IN ACCIDENT. *SLC
Additional Summary:

Toyota ID No:
NHTSA ODI No: 589536
Date of Incident: 20010214
Vehicle: 2000 TOYOTA CAMRY
Location of Incident: WINNETKA, CA
NHTSA Summary:
VEHICLE ACCELERATED SUDDENLY AND UNEXPECTEDLY, RESULTING IN A COLLISION/ MINOR INJURIES. MANUFACTURER HAS BEEN NOTIFIED. *AK CONSUMER WAS INJURED IN VEHICLE, CONSUMER STATES STEERING WHEEL TURNED SHARPLY TO THE LEFT AT TIME OF SUDDEN ACCELERATION. *SLC
Additional Summary:

Toyota ID No:
NHTSA ODI No: 590582
Date of Incident: 20010601
Vehicle: 2001 TOYOTA CAMRY
Location of Incident: APEX, NC
NHTSA Summary:

WHILE TRAVELING BETWEEN 55 AND 65 MPH A VIBRATION OCCURS IN VEHICLE UNDER NORMAL OPERATION. DEALERSHIP COULD NOT DUPLICATE PROBLEM, AND COULD NOT ASSIST CONSUMER. DURING THE WEEK OF JUNE 11TH, ACCELERATOR STUCK WHILE VEHICLE WAS IN OPERATION. DEALERSHIP AGAIN STATED THEY COULD NOT FIND ANYTHING WRONG WITH VEHICLE. *AK CONSUMER NOTICED CRUISE CONTROL WAS NOT WORKING PROPERLY SHORTLY AFTER PURCHASE. IT WOULD CUT IN AND OUT AND JERK VEHICLE. DEALER ADJUSTED TERMINAL OF JUMPER SWITCH WIRE TO ENSURE GOOD CONTACT AND ADJUSTED CABLE OF THE CRUISE CONTROL A COUPLE MONTHS LATER. NOW CONSUMER EXPERIENCES PROBLEMS WITH THE ACCELERATOR STICKING WITHOUT THE CRUISE CONTROL TURNED ON. CRUISE IS STILL EXPERIENCING PROBLEMS WHILE ON. RPMS ARE RUNNING HIGH WHILE AT STOPS, AND ACCELERATOR IS STICKING. WHILE APPLYING BRAKES WHEN THEY ARE HEATED UP, THEY GET HARD AND CAUSE VEHICLE TO VIBRATE. *SLC
Additional Summary:

Toyota ID No:
NHTSA ODI No: 592735
Date of Incident: 20010618
Vehicle: 2001 TOYOTA ECHO
Location of Incident: HUNTERSVILLE, NC
NHTSA Summary:
BRAKE PEDAL AND THE ACCELERATOR PEDAL ARE TOO CLOSE AND CAUSE ERRATIC OPERATION WHEN APPLYING EITHER PEDAL. DEALER/MANUFACTURER WERE NOTIFIED. FEEL FREE TO PROVIDE ANY FURTHER DETAILS ON THIS MATTER.*AK
Additional Summary:

Toyota ID No:
NHTSA ODI No: 591465
Date of Incident: 20010623
Vehicle: 2001 TOYOTA COROLLA
Location of Incident: SILVERS, MD
NHTSA Summary:
WHILE BACKING OUT OF A PARKING SPACE CONSUMER NOTICED A NOISE. DEPRESSED BRAKES AND NOISE GOT LOUDER. THEN VEHICLE ACCELERATED. CAUSING VEHICLE TO RUN INTO WALL. *AK CONSUMER STATES THAT THE ACCELERATION TOOK PLACE WHILE SHE WAS SWITCHING INTO DRIVE FROM REVERSE. EVEN THOUGH BRAKE WAS PRESSED. VEHICLE CONTINUED TO MOVE. AIRBAGS DEPLOYED CAUSING THE WINDSHIELD TO BREAK. CONSUMER WAS SLIGHTLY BRUISED AND BEMPED DUE TO DEPLOYMENT OF THE AIRBAGS. *SLC
Additional Summary:

Toyota ID No:
NHTSA ODI No: 593633
Date of Incident: 20010710
Vehicle: 2000 TOYOTA CAMRY
Location of Incident: FISCHER, TX
NHTSA Summary:
CONSUMERS WIFE WAS DRIVING AND PULLED INTO A PARKING LOT, AND VEHICLE ACCELERATED INTO A CEMENT BARRIER SURROUNDING A LIGHT POST. SHE WAS TRAVELING AT APPROXIMATELY 20 TO 25 MPH, AND BOTH FRONTAL AIR BAGS FAILED TO DEPLOY. NO DETERMINATION HAS BEEN MADE AS TO WHY THE AIR BAGS FAILED TO

FUNCTION. DRIVER EXPERIENCED WHIPLASH, AND WAS SEEKING FURTHER MEDICAL HELP FOR NECK PAIN. *AK *YD
Additional Summary:

Toyota ID No:
NHTSA ODI No: 745511
Date of Incident: 20010713
Vehicle: 2001 TOYOTA COROLLA
Location of Incident: FREMONT, CA
NHTSA Summary:
DRIVER WAS TRYING TO PARK THE CAR, THUS THE CAR WAS TRAVELLING AT VERY LOW SPEED. CAR SUDDENLY SURGED AFTER THE DRIVER APPLIED THE BRAKE. CAR WENT OVER THE CEMENT TIRE STOPPER, UP A SMALL HILL, HIT A WALL, AND STOPPED. THIS CANNOT POSSIBLY HAVE BEEN CAUSED BY THE DRIVER HITTING THE ACCELERATOR PEDAL. THIS IS A SERIOUS SAFETY PROBLEM. WE WILL CONTACT THE DEALER AND THE MANUFACTURER ON JULY 16, 2001. *AK
Additional Summary:

Toyota ID No:
NHTSA ODI No: 584115
Date of Incident: 20010825
Vehicle: 2001 TOYOTA RAV4
Location of Incident: PLEASANT HILL, CA
NHTSA Summary:
ON SEVERAL OCCASIONS, WITH THE CAR IN PARK AND STILL RUNNING, VEHICLE WOULD MAKE A HUGE CLANKING NOISE AND WOULD SPEED FORWARD WITH UNCONTROLLABLE ACCELERATION. VEHICLE RECEIVED BODY DAMAGE. DEALER UNABLE TO LOCATE PROBLEM. *TT
Additional Summary:

Toyota ID No:
NHTSA ODI No: 591143
Date of Incident: 20010824
Vehicle: 2001 TOYOTA RAV4
Location of Incident: SPRINGVILLE, CA
NHTSA Summary:
WHILE COMING TO COMPLETE STOP BY PRESSING ABS BRAKES, VEHICLE SUDDENLY ACCELERATED AND HIT A STONEWALL. DEALER HAS BEEN CONTACTED PLEASE PROVIDE FURTHER DETAILS. CONSUMER HAS TAKEN PHOTOGRAPHS OF VEHICLE/ WALL AND GROUND, SHOWING NO TIRE MARKS.*AK
Additional Summary:

Toyota ID No:
NHTSA ODI No: 751206
Date of Incident: 20010825
Vehicle: 2001 TOYOTA RAV4
Location of Incident: ELK GROVE VILLAGE, IL
NHTSA Summary:
VEHICLE EXHIBITS INTERMITTENT HESITATION UPON ACCELERATION FROM STOP OR LOW SPEED. HESITATION HAS OCCURRED SINCE SHORTLY AFTER VEHICLE PURCHASE DATE. WITH INCREASED FREQUENCY DURING LAST 60-90 DAYS. HESITATION OCCURS

BOTH WITH AIR CONDITIONING ON AND OFF, AND WITH 4-SPEED AUTOMATIC TRANSMISSION (OVERDRIVE ON AND OFF). 2-3 OCCURENCES PER WEEK ARE CURRENTLY EXPERIENCED. MOST FREQUENT WHEN VEHICLE IS MAKING SLOW TURN (BOTH RIGHT AND LEFT) AND LASTS 5-10 SECONDS EVEN IF ACCELERATOR IS NEARLY FULLY DEPRESSED. HESITATION HAS ALSO OCCURRED WHEN MOVING STRAIGHT AHEAD FROM STOP OR FROM LOW SPEEDS (5-10 MPH) STOP AND GO TRAFFIC. DEALER HAS BEEN NOTIFIED AND COULD NOT REPLICATE PROBLEM OR OFFER A SOLUTION, HOWEVER VEHICLE WAS DRIVEN FOR ONLY A SHORT TIME BY DEALER SERVICE TECHNICIANS. DEALER INDICATES NO REPORT OF SIMILAR PROBLEMS EITHER AT THIS DEALERSHIP OR TO TOYOTA USA. ALTHOUGH I KNOW OF OTHER 2001 RAV4 OWNERS WHO HAVE REPORTED A HESITATION PROBLEM TO THEIR DEALERS AND HAVE NOT HAD THE PROBLEM RESOLVED. WHILE THIS PROBLEM IS INTERMITTENT, THIS HAS SOME WAYS WORRIED ME IT HAPPENED EVERY TIME BECAUSE THERE IS NO WAY TO PREDICT THE EVENT AND COMPENSATE FOR IT.*AK
Additional Summary:

Toyota ID No: 10010598
NHTSA ODI No: 20010913
Date of Incident:
Vehicle: 2001 TOYOTA RAV4
Location of Incident: MINNEAPOLIS, MN
NHTSA Summary:
BRAKES WERE APPLIED VEHICLE SUDDENLY ACCELERATED.*JB,,,*AK
Additional Summary:

Toyota ID No:
NHTSA ODI No: 596675
Date of Incident: 20010925
Vehicle: 2001 LEXUS ES300
Location of Incident: HUNTINGTON, NY
NHTSA Summary:
VEHICLE EXPERIENCING PROBLEM WITH DECELERATION AND HESITATION WHEN APPLYING ACCELERATOR PEDAL. VEHICLE AT DEALER SHOP WAITING ON A COMPUTER REPLACEMENT ON NATIONAL BACK ORDER. FEEL FREE TO PROVIDE ANY FURTHER INFORMATION CONCERNING THIS MATTER. *AK
Additional Summary:

Toyota ID No: 20030527039
NHTSA ODI No:
Date of Incident: 20011000
Vehicle: 2002 TOYOTA, LEXUS CAMRY, CAMRY SOLARA, ES300
Location of Incident: ENFIELD, CT
NHTSA Summary:
*** PHONE LOG 05/27/2003 08:09:09 AM ESMART
CUST STS ENGINE SURGES WHEN DECELERATING AND ACCELERATING AT SLOW SPEEDS AND WHEN GOING DOWN HILL. CUST SEE TO KNOW IF ANY KNOWN CONDI HAVE BEEN REPORTED. CUST STS VEH HAS NOT YET BEEN INSPECTED BY DLR

*** CASE CLOSE 05/27/2003 08:09:11 AM ESMART
Additional Summary:

Toyota ID No:
NHTSA ODI No: 8006331
Date of Incident: 20011017
Vehicle: 2000 LEXUS GS300
Location of Incident: JACKSONVILLE, FL
NHTSA Summary:
VEHICLE STARTED TO ACCELERATE WHILE CONSUMER WAS IN TRAFFIC AT A CONSTANT SPEED OR 25-30 MPH. CONTACTED DEALER, AND THE DEALER COULD NOT DUPLICATE THE PROBLEM. THIS PROBLEM OCCURS AT LEAST ONE A WEEK. *AK *YD
Additional Summary:

Toyota ID No:
NHTSA ODI No: 755579
Date of Incident: 20011111
Vehicle: 2001 LEXUS RX300
Location of Incident: POTOMAC FALLS, VA
NHTSA Summary:
ON NOVEMBER 11TH, 2001 I EXPERIENCED A TERRIFYING AND POTENTIALLY LIFE-THREATENING INCIDENT WITH MY CAR. ON THAT EVENING, I WAS APPROACHING A STOP SIGN AT A BUSY INTERSECTION, AND WHEN I PRESSED ON THE BRAKE THE CAR WOULDN'T STOP AND INSTEAD A SUDDEN ACCELERATION FORCED ME INTO THE MIDDLE OF THE INTERSECTION. I WAS ABLE TO STOP THE VEHICLE BY USING THE EMERGENCY BRAKE. SINCE THIS HAS NEVER HAPPENED BEFORE, I THOUGHT IT WAS AN ISOLATED INCIDENT, SO I CONTINUED TO DRIVE THE VEHICLE. IT SEEMED TO BE OPERATING PROPERLY FOR THE NEXT WEEK OR SO, WHEN IT OCCURRED AGAIN. ON THE EVENING OF NOVEMBER 21ST, 2001 I WAS DROPPING A FRIEND OFF AT HOME WHEN I PROCEEDED INTO A PARKING SPACE. AS I PULLED FORWARD, OUT OF NOWHERE, A SUDDEN ACCELERATION OCCURRED AND FORCED THE CAR OVER THE CURB AND UP A HILL. THE PASSENGER IN MY CAR PULLED ON THE EMERGENCY BRAKE AND WAS ABLE TO STOP THE CAR. ANOTHER WITNESS SAW THE REAR TIRES SPINNING AS THE CAR TOOK OFF OVER THE CURB AND UP THE HILL. OBVIOUSLY THERE ARE SOME SERIOUS PROBLEMS WITH THIS CAR.*AK
Additional Summary:

Toyota ID No:
NHTSA ODI No: 858852
Date of Incident: 20011126
Vehicle: 2001 TOYOTA RAV4
Location of Incident: NEW ALBANY, OH
NHTSA Summary:
VEHICLE DOES NOT RETURN THROTTLE TO IDLE POSITION WHEN TAKING FOOT OFF GAS PEDAL. VEHICLE DOES NOT DECELERATE. WHEN PUT VEHICLE IN NEUTRAL OR PRESSED CLUTCH RPMS WOULD GO UP. CONTACTED DEALER, AND THEY STATED THIS WAS NORMAL.*AK
Additional Summary:

Toyota ID No:
NHTSA ODI No: 8002511
Date of Incident: 20011129
Vehicle: 2001 TOYOTA CAMRY
Location of Incident: PATCHOGUE, NY

NHTSA Summary:
WHILE DRIVING, AND UPON COMING TO A COMPLETE STOP VEHICLE CONTINUED TO MOVE, PUT IN PARK, AND PUT EMERGENCY BRAKE ON BEFORE THE VEHICLE CAME TO A COMPLETE STOP. TOOK VEHICLE TO DEALER. DEALER FOUND EVERY THING NORMAL. *AK CONSUMER STATED THAT ON SEVERAL OCCASIONS VEHICLE SURGES FORWARD AND ACCELERATES AFTER A COMPLETE STOP. *YD
Additional Summary:

Toyota ID No:
NHTSA ODI No: 10168073
Date of Incident: 20011130
Vehicle: 2002 TOYOTA CAMRY
Location of Incident: LANGHORNE, PA
NHTSA Summary:
QTY: THE CONTACT STATED WHILE TRAVELING 10 TO 15 MPH THE VEHICLE ACCELERATED TO 30 MPH. THE ISSUE WAS INTERMITTENT. THE SERVICE DEALER WAS NOT UNABLE TO DETERMINE THE PROBLEM WITH THE VEHICLE.
Additional Summary:

Toyota ID No:
NHTSA ODI No: 10074804
Date of Incident: 20011201
Vehicle: 2002 LEXUS ES300
Location of Incident: BEAVERTON, OR
NHTSA Summary:
POWER TRAIN: AUTOMATIC TRANSMISSION. VEHICLE SPEED CONTROL: ACCELERATOR PEDAL. AS HESITATES ON ACCELERATION. LUNGES AT TIMES. SEARCHES FOR PROPER GEAR AND SHIFTS HARD. THE HESITATION CAN BE QUITE DRAMATIC ENOUGH TO LOSE CONFIDENCE IN CRITICAL SITUATIONS. THE CAR HAS BEEN "RE-PROGRAMMED" BY LEXUS, BUT PROBLEMS CONTINUE. LEXUS DENIES THERE IS A PROBLEM AND SAYS THE CAR FUNCTIONS AS DESIGNED. PROBLEMS SURFACED SHORTLY AFTER PURCHASE AND CONTINUE.*AK
Additional Summary:

Toyota ID No: 20012120004167
NHTSA ODI No:
Date of Incident: 20011221
Vehicle: 2002 TOYOTA, LEXUS ES300
Location of Incident: ROCKVILLE, MD
NHTSA Summary:
*** PHONE LOG 12/28/2001 08:14:55 AM KOHNSON CUST IS CONCERNED THAT MY 2002 ES 300 SURGES TO CUST IT FEELS AS GAS PEDAL IS PRESSED DOWN & WILL NOT STOP. THAS HAPPEN INTERMITTENT, & LEXUS DLR HAS NOT BEEN ABLE TO DUP CONCERNS. *** CASE CLOSE 12/30/2001 08:17:29 AM KOHNSON APOL FOR CONCERNS, & DLR HAS INSPECTED VEH & NOTHING FOUND. INTERMITENT CONCERNS CAN NOT BE RPR UNLESS DUP. DOCU CUST CONCERNS. CUST WILL HAVE DLR INSPECT VEH AT 20K SVC. CUST SATIS & REQUIRED NO FURTHER ASSISTANCE.
Additional Summary:

Toyota ID No:
NHTSA ODI No: 8002119

Date of Incident: 20011210
Vehicle: 2001 TOYOTA TUNDRA
Location of Incident: HANFORD, CA
NHTSA Summary:
WHEN DRIVING IN WET WEATHER CONDITIONS AT 80 MPH, CONSUMER WAS ATTEMPTING TO AVOID A FLOODED AREA, WHEN THE CONSUMER SUDDENLY LOST CONTROL OF VEHICLE, UPON IMPACT OF HITTING AN END POST, THE DRIVER AND PASSENGER SIDE AIR BAGS FAILED TO DEPLOY, DRIVER SUSTAINED HEAD AND CHEST INJURIES.*AK CONSUMER STATED WHEN TRYING TO DRIVE OVER TO AVOID THE FLOOD, THE VEHICLE RAPIDLY ACCELERATED ON ITS OWN, CONSUMER BELIEVES THE CAUSE OF FAILURE MAY HAVE BEEN THE 2 TIRES ON THE PASSENGER SIDE MAY HAVE COME OFF THE RIMS, CAUSING LOSS OF CONTROL OF VEHICLE. *JG TIRE INFORMATION (BF GOODRICH P265/70R16)
Additional Summary:

Toyota ID No: 20020730004; 20020803033
NHTSA ODI No:
Date of Incident: 20020000
Vehicle: 2002 TOYOTA, LEXUS CAMRY
Location of Incident: SUNNY ISLES, FL
NHTSA Summary:
*** PHONE LOG 07/25/2002 07:32:01 AM SKELLEY
02 CAMRY. CUST NEPHEW STEVEN GRESSHAM CALLING, STS PURCHASED VEH 6/11/02, STS SINCE PURCHASE CONCERNS APPROX 5X WITH VEH ACCELERATING WHEN PRESSING BRAKE PEDAL. STS HAD VEH TOWED TO DLR 4 WEEKS AGO BC OF ACCELERATION WHEN BRAKING. STS DLR ADV HAS NOT YET DUPLICATED CONCERNS. CUST STS VEH IS STILL AT DLR AND STS DLR HAS NOT PROVIDED LOANER. SKS PERM FIX TO BRAKING CONCERNS. STS HAS NOT SPOKEN WITH CRM.
*** CASE CLOSE 07/26/02 12:42:13 RELEMGR
MANAGER CRAIG SINCE HAS BEEN TRYING TO CALL CUSTOMER TO TALK TO THEM BUT THE PHONE KEEPS DISCONNECTING HIM WITH NO MESSAGE, SO WE SENT HIM A REGISTERED LETTER TO CALL DR.
*** NOTES 08/01/2002 10:12:01 AM SOORN
NEPHEW CALLED BACK TO ADV THAT DLR INFORMED HIM VEH HAS BEEN DAMAGED BECAUSE RODENTS GOT INSIDE AND ATE UP ELECTRICAL WIRING. CUST STS THERE WAS BROKEN WATERMELON IN THE BACK OF TRUNK WHEN HE LEFT VEH AT DLR AND HE ADV DLR OF THIS BUT DLR DID NOT CLEAN OUT AND NOW IN ADDITION TO OTHER CONCERNS MATS IN TRUNK NEED TO BE CLEANED. CUST NEPHEW ALSO STS THAT THERE ARE SEVERAL SCRATCHES ON THE VEH THAT WERE NOT THERE WHEN HE HAD IT FLATBED TOWED TO DLR. CUST SKS ARBITRATION.;
*** PHONE LOG 08/01/2002 10:23:11 AM SOORN
ARBITRATION
PREV CASE 20020725 0088
CUST NEPHEW STS THAT WHEN CUST HIT BRAKES VEH SPED UP AND WENT OUT OF CONTROL. CUST STS WANTED TO RETURN VEH TO DLR WHO REPAIRED BECAUSE THEY COULD NOT DUPLICATE CONDITION. CUST TOWED VEH TO DLR AND HAS NOW BEEN ADV THAT VEH HAS DAMAGE TO WIRING HARNESS DUE TO RODENT INFESTATION AND CUST IS RESPONSIBLE FOR VEH. CUST STS VEH HAS SCRATCHES ON BODY AND FOOD STAINS IN TRUNK. CUST STS HAS ARB PPWR AVAILABLE AND WILL SEND TODAY.
*** NOTES 08/02/2002 11:47:40 AM SWAMIDULS
AS REQUESTED, ARBITRATION PAPERWORK MAILED TO CUSTOMER VIA FIRST CLASS MAIL DATED 8/02/02
*** NOTES 08/05/02 08:54:25 AM SETH

LEFT MESSAGE FOR CUST TO CB. SPOKE TO CRAIG SRV MNGR AT DLR H ADV DLR COULD NOT DUPLICATE CONCERN NOTHING AROUND TO OBSTRUCT ACCEL PEDAL OR CAUSE VEH TO ACCELERATE ON ITS OWN

*** CASE CLOSE 08/06/02 06:19:05 AM SETH
ADV CUST DLR NOT ABLE TO DUPLICATE ANY ABNORMAL CONDITIONS. ALSO ADV CUST DLR INSP ALL ACCEL COMPONENTS & ALL OPERATING WITHIN FCTRY SPECS. NOTHING TO REPAIR.
*** NOTES 09/15/2002 10:15:07 AM RFEWEL
$3K LETTER FROM CUSTOMER ATTORNEY FRANCIS. HOLLANDER (305-373-9999) ON BEHALF OF CUSTOMER CONCERN, SEEKS REPAIR UNDER WARRANTY. AS LETTER ADDRESSES SAME CONCERN AND IS DATED AFTER TMS PROVIDED ITS FINAL POSITION TO THE CUSTOMER, CAC LEFT A MESSAGE ON ATTORNEYS VOICEMAIL ACKNOWLEDGING RECEIPT OF THE LETTER.
NEXT REP. IF CUSTOMER OR ATTORNEY CALLS REGARDING SAME CONCERN, PLEASE CONCUR WITH REGION PER INSPECTION VEHICLE NORMAL AND OPERATING ACCORDING TO DESIGN.
*** NOTES 10/29/02 08:51:44 AM SETH
SRV MNGR CALLED TODAY ADV CUST DID NOT PICK UP VEH DLR ADV THEY DID FIND RODENTS NEST IN ENG AREA AT TIME WHEN VEHE INITIALLY BRAUGHT IN TO DLR.
Additional Summary:

Toyota ID No: 20020826 0161
NHTSA ODI No:
Date of Incident: 20020000
Vehicle: 2002 TOYOTA, LEXUS CAMRY
Location of Incident: TAMARAC, FL
NHTSA Summary:
*** PHONE LOG 08/26/2002 07:42:16 AM WHILL
FYI
CUST STS WHEN STOPS IN '02 CAMRY ALK REMS DROP DRAMATICALLY & VEH VIBRATES. AS IF GOING TO STALL. CUST STS ALSO EXPER SURGE WHEN VEH IS STOPPED AT A LIGHT, ELS IF FOOT NOT ON BRAKE. VEH WOULD LURCH FORWARD. CUST STS DLR ADV THAT SEEN OTHER VEHS RUN LCV W/ SAME ENGINE VEH OPERATING AS PRESCRIBED. CUST STS DISAGREES BC HAS OWNED OTHER TOYS. SKS VEH INSPECTED BY FACT REP, PERMANENT FIX TO ENG CNCRNS. CUST STS HAS SPOK W/ CRM.
*** NOTES 08/30/02 12:08:46 PM SETH
*** NOTES 08/30/02 12:09:00 PM SETH
LEFT MESAGE FOR CUST TO CB.

*** CASE CLOSE 09/09/02 09:01:29 AM SETH
SPOKE TO CUST SHE ADV DLR ADV CONDITION NORMAL FOR VEHICEL. ASKED CUST IF DLR YOK HER FOR RBPS IN SIMILAR VEHICLE SHE ADV NO. ADV CUST WILL NOTIFY CRM LISA IF CONDITION IS NORM SHE SHOULD DEMONSTRATE TO CUST IN SIMILAR VEHICLE.

Additional Summary:

Toyota ID No: 20020820192; 20020826 0729
NHTSA ODI No: 20020000
Date of Incident:
Vehicle: 2002 TOYOTA, LEXUS CAMRY, CAMRY SOLARA, ES300
Location of Incident: MARY ESTHER, FL

NHTSA Summary:
*** PHONE LOG 06/02/2002 08:11:04 AM EDELACRUZ
STS HAS CNCRN W/ VEH STS VEH HAS BEEN IN TO DLR 5X FOR SAME CNCRN STS HAS INTERMITTENT CNCRN WHEN COMES TO STOP ENGINE IDLES DOWN LIKE IS GOING TO STALL STS IF DOESNT HAVE FOOT ON BRAKE VEH TRIES TO SURGE FORWARD. STS RPM'S PICKS UP & IF DOESNT HAVE BRAKE APPLIED WILL SURGE FORWARD WHEN RPM'S INCREASE STS HAS CNCRN W/BRAKES. STS SPK W/ CLIP'IVN TO ADV OF CNCRN WHO SEEMED UNINTERESTED W/ CNCRN.SPK W/ DARWIN TODAY WHO ADV REG REP WOULD BE OUT NEXT WEEK TO INSP VEH.
*** CASE CLOSE 06/07/02 12:41:12 RELEMGR
FAXL COPIES SVR MANGER ROAD TESTED VEH FOR SERVERAL MILES AND ON THAT DAY THEREWAS NO CONCERS PRESENT. STEVE TOM IN DSM WILL ROAD TEST ON 6-6-02
*** NOTES 06/26/2002 08:23:40 AM SFERNANDEZ
CUST STS VEH WAS TEST DRIVEN BY REGION REP. CUST STS FACTORY REP WAS AWARE OF CONCERN & ADV CONCERN DUE TO OPEN CIRCUIT & THROTTLE SENSOR DAMAGED. CUST STS THROTTLE SENSOR WAS REPLACED BY DLR, BUT CUST STILL HAVING CONCERNS. CUST STS HAS NOT RETURNED TO DLR SINCE REPAIR ON 6/16. NCR APOLGI. NCR ADV CUST WILL OPEN FILE TO REGION (PA CASE 20026420072)9.
*** PHONE LOG 08/20/2002 10:55:17 AM SFERNANDEZ
PA - ONLY FILE 20020620015S2. STS HAS CNCRN W/VEH STS VEH HAS BEEN IN TO DLR 5X FOR SAME CNCRN.STS HAS INTERMITTENT CNCRN WHEN COMES TO STOP ENGINE IDLES DOWN LIKE IS GOING TO STALL. STS IF DOESNT HAVE FOOT ON BRAKE VEH TRIES TO SURGE FORWARD. STS RPM'S PICKS UP & IF DOESNT HAVE BRAKE APPLIED WILL SURGE FORWARD WHEN RPM'S INCREASE.STS HAS CNCRN W/BRAKES. CUST STS FACTORY REP INSPVEH & RECOMMENDED REPLACEMENT OF THROTTLE SENSOR SINCE FOUND DAMAGED, SET STILL HAS COND.
*** NOTES 08/23/02 12:19:13 PM SETTO
ATTEMPTED CONTACTING CUSTOMER. MESSAGE ON MACHINE ADVISED THAT THE PARTY IM CALLING IS NOT ANSWERING AND REQUESTED I CALL BACK LATER. DOES NOT PERMIT A MESSAGE TO BE LEFT.
*** NOTES 08/26/02 07:38:56 AM FTIMBERLAKE
CUST STS REGION HASN'T CALLED, NCR ADV REGION ATTEMPTED TO CALL BUT NOT ABLE TO LEAVE MESS ON ANSWERING MACHINE. NCR SPOKE TO BARBARA DILANCIANO-REGION AND ADV HER CUST HAS CALL PRIVACY LINE AND THAT BARBARA WILL NEED TO ENTER CODE#1120 WHEN CALLING CUST
*** NOTES 08/26/02 07:49:18 AM SETTO
S/W CUST WHO ADV HAS MET WITH DIST MGR, TEST DROVE WITH OTHER VEH, AND CONDITION HAS RETURNED AFTER RECOMMENDED REPAIRS. ONLY THING ELIMINATED WAS VEH SURGING FORWARD AT STOP. ADV WOULD CONTACT DST MGR WITH INFO.
*** NOTES 09/06/02 15:22:52 AM SETTO
S/W DIST MGR WHO ADV IS FAMILIAR WITH VEH AND WANT THE DLR TO FIX THE CONDITION. L/M WITH CUST ADV WILL HAVE DLR CONTACT CUST TO SET UP APPT.

*** CASE CLOSE 09/23/02 11:54:44 AM SETTO
S/W DLR S/M AND ADVISED THIS IS NOT ONE FOR THE DIST MGR TO GET INVOLVED. THEY WERE TO CONTACT CUST, SET APPT, AND RIDE THE VEHICLE. TEST DRIVE WITH CUSTOMER, WATCH THE WAY SHE WORKS THE BRAKE, HAVE HER OBSERVE HOW YOU APPLY BRAKES. IF BRAKES GO TO FLOOR, MORE THAN THEY SHOULD, REPAIR VEH. IF THIS IS STANDARD FOR HYDROLIC BRAKES, EXPL TO CUSTOMER TO HER UNDERSTANDING.
*** NOTES 01/08/03 05:13:52 AM SETO
LAUREN MCGOWAN REPL SETTO B. DILANCIANO, SPK W/ DLR SVCMGR CURTIS BAXTER A
Additional Summary:

Toyota ID No: 200210211478
NHTSA ODI No:
Date of Incident: 20020000
Vehicle: 2002 TOYOTA, LEXUS CAMRY, CAMRY SOLARA, ES300
Location of Incident: COCONUT CREEK, FL
NHTSA Summary:
*** PHONE LOG 10/21/2002 09:26:38 PM EDA
----F/A----
CUST STS THAT SHE HAS HAD A CONCERN W/THE VEH SURGING FORWARD. CUST STS THAT SHE HAS COME TO A STOP AND RAD THE VEH SURGE FORWARD INTO ANOTHER VEH. CUST STS THAT THIS SURGE HAS OCCURED A TOTAL OF 4X. CUST STS THE OTHER THREE TIMES SHE TURNED THE VEH INTO THE CURB. CUST STS THAT SHE HAS TAKEN THE VEH TO THE DLR 2X'S FOR THIS CONCERN. CUST STS THAT THE DLR HAS INSPECTED THE BRAKES AND ADV CUST THEY COULD NOT LOCATE A CONCERN W/THE VEH. CUST STS THAT SHE IS NOT =>
*** NOTES 10/21/2002 09:36:29 PM EDA
>>DRIVING THE VEH ANYMORE. CUST STS SHE WILL NOT DRIVE THE VEH UNTIL IT IS REPAIRED.
*** NOTES 10/23/02 12:31:24 PM SETO
SPOKE TO CUST ADV HER IF SHE CANNOT DEMONSTRATE CNCRN FOR DLR THEY WILL NOT BE ABLE TO REPAIR. ADV CUST I WILL SPEAK TO DLR & TECH CENTER FOR POSSIBLE RESOLUTION THEN I WILL CONTACT HER IN THE NEXT COUPLE OF DAYS.

*** CASE CLOSE 10/30/02 12:27:51 PM SETB
ADV CUST DLR HAS NOT BEEN ABLE TO DUPLICATE CONCERN. ADV CUST WE WILL NEED HER TO DEMONSTRATE CONCERN SO ANY REPAIRS CAN BE MADE.
Additional Summary:

Toyota ID No: 200211270127
NHTSA ODI No:
Date of Incident: 20020000
Vehicle: 2002 TOYOTA, LEXUS CAMRY, CAMRY SOLARA, ES300
Location of Incident: MONROE TOWNSHIP, NJ
NHTSA Summary:
*** PHONE LOG 12/27/2002 07:53:36 AM DHARDY
AKE
PREVIOUS 20021210084
CUST STS BRAKES INTERMITTENTLY REV UP AND GO FORWARD EVEN WHILE FOOT IS ON BRAKE. CUST STS WHEN APPLYING BRAKE VEH CONTINUES TO GO FORWARD AND THEIS THIS IS EXTREMELY DANGEROUS. CUST STS FEELS DLR IS NOT INTERESTED IN REPAIRING THE VEH AND HAS TRIED SEVERAL TIMES TO GET THEM TO KEEP THE VEH FOR MORE THAN 2 HOURS TO DUPLICATE THE PROB. CUST STS NOW WANTS TO GO THROUGH ARB.
*** CASE CLOSE 12/30/02 05:39:28 AM NY5
CASE DISPATCHED TO FTS T BENNECA AND CC DISPM L GREGORY.
*** NOTES 12/30/2002 01:23:05 PM ISMAILES
ARBITRATION PAPERWORK SENT 12/30 VIA FIRST CLASS MAIL.
Additional Summary:

Toyota ID No: 200205021203
NHTSA ODI No:
Date of Incident: 20020000
Vehicle: 2002 TOYOTA, LEXUS CAMRY, CAMRY SOLARA, ES300

Location of Incident: MIRAMURI CITY, TX
NHTSA Summary:
*** PHONE LOG 07/02/2002 05:08:56 PM LESPINOZA
----FCEB----CUST STS WAS PULLING INTO THE DRIVE WAY & SLOWED TO PARK DRIVE WAY. STS VEH ACCELORATED &CUST HIT HIS HOME WALL. CUST SWITCHED GEARS TO REVERSE AND VEH SURGED BACK. CUST STOPPED IN THE MIDDLE OF THE DRIVEWAY PUT VEH IN DRIVE, STS GAS PEDAL FELT STUCK THEN DROVE FORWARD A AND X INTO CUST HOUSE. POLICE REPORT STS FOR MECHANICAL FAILURE. CUST STS TOOK VEH TO NISSIAN DLR PER INSURANCE CO FOR EPR & INSPECT. STS DLR INSPECTED & EVALUATED & DETERMINED VEH WAS OK.

*** CASE CLOSE 07/02/2002 05:31:06 PM LESPINOZA
*** NOTES 07/02/2002 05:32:40 PM LESPINOZA
REFER TO LEGAL VEH HAS BEEN RPRD
Additional Summary:

Toyota ID No: 200202210517
NHTSA ODI No:
Date of Incident: 20020000
Vehicle: 2002 TOYOTA, LEXUS CAMRY, CAMRY SOLARA, ES300
Location of Incident: GLEN COVE, NY
NHTSA Summary:
*** PHONE LOG 02/21/2002 09:55:52 AM HAMINI CUST WAS GOING AROUND 10 MPH AND PULLING INTO A PARKING SPOT BEHIND HER WORK. CUST WAS GOING SLIGHTLY DOWN HILL AND PRESSED ON HER BRAKES. SHE STS THAT THE VEH JUMPED AND SHE SLID INTO A WALL. SHE STS THAT SHE BROUGHT THE VEH TO DAN'S AUTO COLLISION AND THE ASSOCIATE THERE STS THAT THE BRAKE ARE STOPPING THE VEH BUT THE PEDAL GOES ALL THE WAY TO THE FLOOR. CUST SPOKE TO SM DAN BARLEY AT LEXUS OF MASSAPEQUA AND HE REF CUST TO UCS. *** PHONE LOG 02/21/2002 10:02:40 AM HAMINI ACTION TYPE: OUTGOING CALL CALLED SM DAN AND HE STS THAT THE AREA OFFICE HAS NOT BEEN ALERTED TO THIS CASE. HE STS THAT THE CUST WANTS OUT OF HER VEH. SO HE REF HER TO UCS TO REPORT THE CASE. I STS THAT I WOULD FSV WITH THE AREA OFFICE ANALYST FOR FURTHER ASST. *** PHONE LOG 02/21/2002 10:06:24 AM HAMINI ACTION TYPE: OUTGOING CALL CALLED SARAH MAGNANO AREA OFFICE ANALYST AND LEFT MESSAGE FOR HER TO F/U WITH ME. *** NOTES 02/21/2002 10:11:54 AM HAMINI I WANTED TO KNOW IF AREA OFFICE WAS INTERESTED IN DOING A PR ON CUST VEH BEFORE SHE GOT THE VEH REPAIRED. *** PHONE LOG 02/21/2002 10:12:46 AM HAMINI ACTION TYPE: OUTGOING CALL CALLED CUST AND INFORMED HER THAT I HAVE F/U WITH AREA AND LEFT MESSAGE. I WILL ATTEMPT AGAIN LATER TODAY. IF I HEAR ANYTHING I WILL F/U WITH CUST AFTER. *** PHONE LOG 02/21/2002 10:24:56 AM HAMINI ACTION TYPE: INCOMING CALL B/C CALL FROM SARAH MAGNANO WHO STS THAT SHE THINKS A PR WOULD NEED TO BE PERFORMED IF THE CUST STS THAT THE BRAKES WERE MALFUNCTIONING AT THE TIME OF AN ACCIDENT. SHE WOULD LIKE REP TO FORWARD CASE TO AREA OFFICE AND THE PR WILL BE PERFORMED NEXT WEEK. *** PHONE LOG 02/21/2002 12:31:07 PM HAMINI ACTION TYPE: OUTGOING CALL CALLED CUST AND INFORMED HER THAT I HAVE CONTACTED THE AREA OFFICE AND THE PR WILL BE SCHEDULE FOR NEXT WEEK. CUST STS THAT THERE WAS AN ACCIDENT REPORT TAKEN AND SHE WILL FAX ME A COPY TOMOROW. I ALSO FILL OUT THE LEGAL TAB IN THIS CASE. *** NOTES 02/21/2002 12:32:33 PM
Additional Summary:

Toyota ID No: 200212110365
NHTSA ODI No:

Date of Incident: 20020000
Vehicle: 2003 TOYOTA, LEXUS CAMRY, CAMRY SOLARA, ES300
Location of Incident: NEW CUMBERLAND, WV
NHTSA Summary:
*** PHONE LOG 12/11/02 08:09:16 AM EGALINDO
CUST STS HE FEELS VEH ACCELERATES & DECELERATES ON ITS OWN. CUST STS VEH TO DLR 3X & DLR UNABLE TO DIAGNOSE CNCRN. CUST STS HE WAS ADVSD VEH IS OPERATING NORMALLY. CUST DISPUTES STS FEELS VEH SHOULD PROVIDED BETTER DRIVING RESPONSE. NCR APOL ADVSD DLR OPEN CONTACT WITH IHD.

*** CASE CLOSE 12/20/02 10:28:41 AM DLR4703
SERVICE MANAGER DROVE VEHICLE WITH CUSTOMER.NOTICED NO ABNORMAL CONCERNS. NOR(2015.02) A VISIT WITH DSPM(DANNY NGO).HE DROVE VEHICLE WITH CUSTOMER CUSTOMER NOTICED NO ABNORMAL CONCERNS. DID NOTICE TRANSMISSION DOWNSHIFTING. INSTRUCTED CUSTOMER THIS IS A NORMAL OPERATING CHARACTERISTIC OF THE VEHICLE. CUSTOMER CALLED AGAIN AND WANTS TO PURSUE OTHER OPTIONS. HE FEELS THE DEALERSHIP HAS DONE ALL THAT IT CAN DO. CUSTOMER STATED HE IS NOT SATISFIED WITH THE VEHICLE. I THINK SOMEONE FROM THE REGION SHOULD BE INVOLVED AT THIS POINT.
Additional Summary:

Toyota ID No: 200212090415
NHTSA ODI No:
Date of Incident: 20020000
Vehicle: 2003 TOYOTA, LEXUS CAMRY, CAMRY SOLARA, ES300
Location of Incident: YONKERS, NY
NHTSA Summary:
*** PHONE LOG 12/03/2002 07:51:55 AM BBRIEDE
----FCEB----
SEE CASE # 200212020829
CUST STS ACCELERATOR STUCK WHEN TRYDNG TO ENTER GARAGE. STS VEH LUNGED FORWARD & RAN INTO ANOTHER GARAGE. STS FRONT OF VEH IS DENTED BUT NOT BADLY DAMAGED. STS WAS WEARING SEAT BELT & WAS ALONE IN THE VEH. CUST ADV DLR TOLD HIM TO CALL NCR TO SETUP REGIONAL INSPECTION B/C WANTS NEW VEH FROM TOYOTA BECAUSE IS AFRAID TO DRIVE THIS VEH.
*** NOTES 12/04/02 05:41:16 AM NY5
CASE DISPATCHED TO HANNA DRIVER.
*** NOTES 12/04/02 06:53:05 AM NY5
CASE ASSIGNED TO FTS MIKE MARSNICK.

*** CASE CLOSE 01/09/03 08:05:29 AM NY4
TSS VINCE LUPPINO INSPECTED VEHICLE ON 12/31/2003. TSS FOUND VEHICLE IS FUNCTIONING NORMALLY.
Additional Summary:

Toyota ID No: 200205201203
NHTSA ODI No:
Date of Incident: 20020000
Vehicle: 2003 TOYOTA, LEXUS ES300
Location of Incident: VALLEY COTTAGE, NY
NHTSA Summary:

*** PHONE LOG 09/30/2002 01:52:26 PM SHKIRHA CUST WANTED TO DOCUMENT CONCERNS ABOUT PROBLEM. CUST 02 ES 300 HAS HIGH REV. HARD SHIFTING AT TIMES. CUST STATES VEH GOES INTO CRUISE CONTROL WHEN ACCELERATING. DOOR CHECK MAKES NOISE WHEN OPENING DOOR. DOOR SEAL KEEPS FALLING OFF. *** CASE CLOSE 09/30/2002 01:53:09 PM SHKIRHA CUST THANKFUL FOR DOCUMENTING CONCERNS. CUST STATES DLR HAS BEEN GREAT & GIVEN HIM A LOANER.
Additional Summary:

Toyota ID No: 2002109690429
NHTSA ODI No:
Date of Incident: 20020000
Vehicle: 2002 TOYOTA, LEXUS ES300
Location of Incident: DELRAY BEACH, FL
NHTSA Summary:
*** PHONE LOG 09/04/02 00:44:59 AM BONFORD CUST HAS 02 ES300. WHEN VEH IS IN REVERSE, ENGINE ACCELERATES. CUST SEEKS TO KNOW IF VEH HAS ISSUES W/ ACCEL WHEN GOING IN REVERSE. ADV CUST TO TALK TO DLR. *** CASE CLOSE 09/09/02 08:45:07 AM BONFORD
Additional Summary:

Toyota ID No: 10062511
Date of Incident: 20020101
Vehicle: 2002 TOYOTA CAMRY
Location of Incident: MEMPHIS, TN
NHTSA Summary:
WHEN DRIVING AT LOW SPEEDS, THE VEHICLE SURGED FORWARD WITHOUT WARNING. THE CONSUMER TOOK THE VEHICLE TO THE DEALER FOR INSPECTION AND THE MECHANIC CHANGED THE COMPUTER IN THE VEHICLE. *AK. THE A/C DID NOT COOL PROPERLY. THE VEHICLE LUNGED FORWARD AND BACKWARDS. THE CONSUMER WAS UNABLE TO STOP THE VEHICLE. SUDDEN ACCELERATION ALSO OCCURED WHEN BRAKING. THE DEALER WAS UNABLE TO DUPLICATE THE PROBLEM. EVEN AFTER 443 MILES OF DRIVING THE VEHICLE. *SC *JB
Additional Summary:

Toyota ID No: 10062756
Date of Incident: 20020128
Vehicle: 2001 TOYOTA SEQUOIA
Location of Incident: TRUCKEE, CA
NHTSA Summary:
WE HAVE A TOYOTA SEQUOIA. THE PROBLEMS ARE THE 4 WHEEL DRIVE IS NOT OPERATING ALL THE TIME. IT DOES NOT ENGAGE, WHEN IT DOES SOMETIMES IT DOES NOT STAY IN 4 WHEEL DRIVE. ONE EXAMPLE IS WHEN MY WIFE HAD SIX FRIENDS IN THE VEHICLE THE 4 WHEEL DRIVE DID NOT STAY ENGAGED AND THE VEHICLE SKID CONTROL MADE THE ENGINE LOOSE POWER SO SHE SLID BACKWARDS DOWN A HILL. NO ONE WOULD RIDE IN OUR 4 WHEEL DRIVE AGAIN. THE VEHICLE SKID CONTROL ACTIVATES AT RANDOM ON DRY PAVEMENT. THE SKID CONTROL MAKES THE ENGINE LOOSE POWER WHILE IN TRAFFIC. THERE IS ALSO A RESTATION IN THE ENGINE WHEN ACCELERATING FROM A COMPLETE STOP. ANOTHER PROBLEM IS THE WRAKING SYSTEM IS AWOT ADEQUATE FOR THE VEHICLE. THE ENTIRE FRONT BRAKES HAD TO BE REPLACED. THE VEHICLE HAS BEEN IN FOR THE SAME REASRS AT LEAST FIVE TIMES AND

IS STILL NOT WORKING THE WAY IT SHOULD. WE HAVE ALL THE DOCUMENTATIOS FOR SERVICE ON OUR SEQUOIA. WE HAVE DONE INTERNET RESEARCH THROUGH THE NHTSA AND HAVE FOUND THE SAME PROBLEM WITH OTHER TOYOTA SEQUOIAS.
Additional Summary:

Toyota ID No:
NHTSA ODI No: 4064551
Date of Incident: 20020201
Vehicle: 2000 TOYOTA CAMRY
Location of Incident: DETROIT, MI
NHTSA Summary:
CONSUMER STATED THE GAS PEDAL WILL STICK IN COLD WEATHER OR WHEN VEHICLE IS COLD. CONSUMER WOULD HAVE TO PUSH OR KICK PEDAL BEFORE MOVING.*AK,*YH
Additional Summary:

Toyota ID No:
NHTSA ODI No: 10060829
Date of Incident: 20020201
Vehicle: 2001 TOYOTA CAMRY
Location of Incident: CHANDLER, AZ
NHTSA Summary:
SUDDEN ACCELERATION ON FREEWAY IN TOYOTA CAMRY L.E. JUST AFTER I HAD BOUGHT THE TOYOTA I NOTICED THIS HAPPENING AND DID WRITE AN E-MAIL TO THE MAIN WEB SITE OF TOYOTA JUST TO KNOW IF THEY WERE AWARE OF THE PROBLEM. THEY REFERRED ME TO THEIR DEALER TO HAVE IT CHECKED OUT. I NEVER MENTIONED IT DURING SERVICE APPOINTMENT BECAUSE AFTER THE FIRST FEW MONTHS THE PROBLEM DID NOT SEEMS TO OCCUR TOO OFTEN. IT MAINLY HAPPENS AT HIGHER SPEEDS. NEVER NOTICED IT A LOWER SPEEDS.
Additional Summary:

Toyota ID No:
NHTSA ODI No: 10001095
Date of Incident: 20020215
Vehicle: 2001 LEXUS ES300
Location of Incident: HOUSTON, TX
NHTSA Summary:
WHILE DRIVING THE VEHICLE AT ANY SPEED, THE ENGINE SUFFERED SUDDEN ACCELERATION. THE DEALER COULD NOT DUPLICATE OR CORRECT THE PROBLEM. TS WHEN ACCELERATING TO CHANGE LANE OR ENTER THE FREEWAY, THE VEHICLE ALMOST STALLED AND OR DECELERATED. SCC
Additional Summary:

Toyota ID No:
NHTSA ODI No: 10063555
Date of Incident: 20020215
Vehicle: 2001 TOYOTA HIGHLANDER
Location of Incident: BOONE, NC
NHTSA Summary:
WHILE IN A CAR WASH DRIVER RELEASED PRESSURE FROM THE BRAKE PEDAL AND THE VEHICLE MOVED FORWARD, HITTING ANOTHER VEHICLE. IT BOUNCED BACK AND SURGED FORWARD AGAIN, HITTING A WALL. ENGINE CONTINUED TO RACE UNTIL THE

VEHICLE WAS SHUT OFF BY THE DRIVER. MANUFACTURER WAS SUPPOSED TO INVESTIGATE THE PROBLEM, BUT NEVER INFORMED THE CONSUMER OF THE FINDINGS. *AK
Additional Summary:

Toyota ID No:
NHTSA ODI No: 10060712
Date of Incident: 20020215
Vehicle: 2002 TOYOTA RAV4
Location of Incident: CRYSTAL, MN
NHTSA Summary:
WHEN THE BRAKE WAS APPLIED, THE VEHICLE SURGED FOWARD DUE TO FUEL THROTTLE LEAKAGE. DEALER NOTIFIED. *JB
Additional Summary:

Toyota ID No:
NHTSA ODI No: 565674
Date of Incident: 20020232
Vehicle: 2001 TOYOTA TACOMA
Location of Incident: TUCSON, AZ
NHTSA Summary:
WHILE CONSUMER WAS APPROACHING A PARKING AREA HE SLOWED DOWN TO TURN AT LESS THAT 10 MILES PER HOUR, PLACED HIS FOOT ON THE BRAKE PEDAL TO ENTER A PARKING PLACE. THE ENGINE RPM INCREASED TO APPROXIMATELY 30 MILES PER HOUR. CONSUMER WAS UNABLE TO STOP THE VEHICLE. THE CONSUMER THEN COLLIDED WITH A PARKED VEHICLE. CONSUMER SUSTAINED INJURIES AND EXTENSIVE DAMAGE TO HIS VEHICLE AND THE OTHER VEHICLE DRIVER ALSO WAS INJURED. *YD
Additional Summary:

Toyota ID No: 2002100401060
NHTSA ODI No:
Date of Incident: 20020120
Vehicle: 2002 TOYOTA, LEXUS ES300
Location of Incident: KENNESTH CITY, FL
NHTSA Summary:
*** PHONE LOG 08/04/2003 12:35:48 PM LEZRIEL10 CUST OWNS A 92 CL 100 & HAS CONCERNS W/TRANS. STATES VEH JERKS & LUNGES WHILE @ LIGHTS. STATES DLR HASN'T BEEN ABLE TO FIX VEH & HAS TAKEN TO DEARBORN X3. *** NOTES 08/04/2003 12:35:48 PM LEZRIEL10 TO: GSM LESLIE SZUCS FROM: LIZETTE EZRIE 410-646-1647 CUST WOULD LIKE DRIVING RESPONSE FIXED ON VEH. PLS LET ME KNOW IF ANY UPDATES AVAIL. FOR CUST. PLS LET ME KNOW IF YOU HAVE ANY QUESTIONS. THANKS. *** REFERENCE 20020801000001 CREATED 08/04/2003 12:36:03 PM LEZRIEL10 *** PHONE LOG 08/05/2003 08:59:52 AM LEZRIEL10 ACTION TYPE: INCOMING CALL I SPOKE WITH MIKE ALOIA WHO ADV ES UPDATE IS AVAIL FOR CUST & ADV CUST OF THIS PROM TO CUST CONTACTING LCS. STATES WILL CALL CUST AGAIN & FIND OUT IF CUST WOULD LIKE APPT FOR THIS. *** PHONE LOG 08/05/2003 10:50:54 AM LEZRIEL10 ACTION TYPE: INCOMING CALL GSM LESLIE SZUCS CALLED SRS TO KNOW WHAT CAN BE DONE FOR CUST ES DRIVING RESPONSE. I ADV OF RM NOTES GSM VERY HAPPY THIS IS AVAIL & WILL CONTACT GSM & MAKE SURE CUST IS CONTACTED. *** PHONE LOG 08/07/2003 11:03:24 AM LEZRIEL10 ACTION TYPE: OUTGOING CALL I SPOKE W/CUST WHO STATES HAS BEEN TOLD BEFORE FIX AVAIL & IT NEVER HAPPENS. I ADV CUST TO SPEAK W/GSM MIKE ALOIA WHO ADV WILLING TO WORK W/CUST & FIXED DRIVE OUT & FIX CUST VEH. SRS TO KNOW IF GUARANTEED 100% FIX WIL WORK.

I ADV NOT GOING TO MAKE ANY GUARANTEE WOULD HAVE TO HAVE DLR INSTALLED & CUST WOULD HAVE TO RENDER THAT DECISION. STATES WILL THINK ABOUT IT & CB IF SRS TO HAVE PART INSTALLED. *** DEALER NOTES: 08/08/03 12:22:34 EO8691: SERVICE MANAGER HAS MADE NUMEROUS ATTEMPTS TO CONTACT CUSTOMER. AM WAITING FOR HIM TO CALL US BACK. *** DEALER NOTES: 08/14/03 10:03:17 VEHICLE WAS COMPLETED ON 08/11/2003 *** 8050CASE 20050604190001-1 CLOSED 08/14/2003 12:11:15 PM LEZRIEL10 *** CASE CLOSE 08/14/2003 12:12:00 PM LEZRIEL10 CASE CLOSED AS CUST ADV ON 8/7 WOULD CB IF REQUIRED FURTHER ASSIST & CUST HASN'T CB. ****SEA FIND OUT IF SATISFIED W/ES UPDATE. THANKS.
Additional Summary:

Toyota ID No: 20020404040228
NHTSA ODI No:
Date of Incident: 20020400
Vehicle: 2002 TOYOTA, LEXUS CAMRY, CAMRY SOLARA, ES300
Location of Incident: DESTREHAN, LA
NHTSA Summary:
*** PHONE LOG 04/04/2002 08:34:55 AM AWAN CUST ADV THAT WIFE WAS PULLING INTO PARKING EFORT IN A LOCAL GARAGE. SHE PUT HER FOOT ON HER BRAKE AND AS SHE TRIED TO STOP THE VEH ACCELERATED INTO A POLE. HE ALSO ADV THAT WHEN COLD THE VEH DECELES WHEN SHIFTING GEARS. CUST ADV IF THE BRAKES FAIL AGAIN HE WILL SUE LEXUS WITH A LAWSUIT THAT LCS HAS NEVER SEEN BEFORE. HE ADV THAT DLR HAS SEEN THE VEH AND ADV THAT THERE IS NOTHING WRONG WITH THE VEH. *** CASE CLOSE 04/04/2002 08:36:57 AM AWAN
Additional Summary:

Toyota ID No:
NHTSA ODI No: 509712
Date of Incident: 20020412
Vehicle: 2000 LEXUS GS300
Location of Incident: CORAL SPRINGS, FL
NHTSA Summary:
UNDER HEAVY ACCELERATION TO MERGE INTO TRAFFIC THE ACCELERATOR STUCK IN THE WIDE OPEN POSITION ONCE PRESSURE HAD BEEN REMOVED FROM THE PEDAL UPON EXAMINATION, THERE WERE NO PHYSICAL OBSTRUCTIONS HE, FL GOB-MAT. I DISSE OBJECTS WHICH WOULD CAUSE THE PEDAL TO JAM IN THIS POSITION. HIGH REVVING AND UNCOMMANDED ACCELERATION PERSISTED FOR SEVERAL SECONDS UNTIL THE BRAKE PEDAL WAS EMPRESSED HEAVILY TO AVOID COLLIDING WITH THE VEHICLE IN FRONT.*AK
Additional Summary:

Toyota ID No:
NHTSA ODI No: 4018760
Date of Incident: 20020425
Vehicle: 2000 TOYOTA CAMRY
Location of Incident: DEDHAM, MA
NHTSA Summary:
WHILE DRIVING, CONSUMER APPLIED BRAKES AND VEHICLE SUDDENLY ACCELERATED, CAUSING A FRONT COLLISION. DEALER HAS BEEN NOTIFIED *AK CONSUMER STATED TOYOTA TESTED VEHICLE, AND NO PROBLEM COULD BE FOUND *JB
Additional Summary:

Toyota ID No:
NHTSA ODI No: 8008708
Date of Incident: 20020824
Vehicle: 2000 LEXUS GS300
Location of Incident: LOS ANGELES, CA
NHTSA Summary:
VEHICLE ACCELERATED WITHOUT PRESSING THE GAS PEDAL. TOOK VEHICLE TO DEALER WHO STATED THAT STABILIZER BAR WAS DEFECTIVE. *AR CONSUMER STATED THAT HE HIT FIVE CARS OVER A DISTANCE OF ABOUT 1/2 MILE BEFORE COMING TO A STOP. SUSPICIONS CAUSED BY ELECTROMAGNETIC WAVE, BRAKE AND AIRBAG PROBLEMS, ARISING FROM THE WAVE AND THE VEHICLE'S COMPUTER. *TT
Additional Summary:

Toyota ID No: 20040231023
NHTSA ODI No:
Date of Incident: 20020410
Vehicle: 2002 TOYOTA, LEXUS CAMRY
Location of Incident: CLEVELAND, OH
NHTSA Summary:
*** PHONE LOG 02/22/2004 08:42:33 AM TYAMADA
02 CAMRY, 35K MI, CUST STS IS EXPERIENCING A SUDDEN ACCELERATION WHEN SHE TRIES TO APPLY THE BRAKE. CUST STS DLR TEST DROVE BUT COULD NOT REPLICATE. CUTS STS SPOKE TO EMMA, SVC ADVISOR, BUT NOT CRM OR SVC MGR. CUST FLT THIS IS A SAFETY CONCERN.

*** CASE CLOSE 03/24/04 12:30:35 PM DLR34024
CRM REVIEW CUST CONCERN: UPON REVIEW FOUND THAT CUST VEH TO DLR 3/15/04 FOR INSP. DLR DID NOT REPRO CUST COMPLAINT, CUST DID NOT LEAVE VEH. WAITED WHILE TECH DROVE. CRM CONT CUST AND XPLN THAT DLR CANNOT DIAGN IF UNABLE TO REPRO SYMPTOM. CRM RECOMM THAT CUST BRING BACK ON A DAY WHEN SHE CAN LEAVE IT FOR WHOLE DAY & DLR WILL TRY TO REPRO. EXPLN COULD NOT GUARAN BEING ABLE TO REPRO. CUST STATES HAS ONLY HAPP TWICE BOTH IN LAST TWO MONTHS. CUST TO CALL & SCHED APPT AT HER EARLIEST CONVENIENCE. CUST HAPPY
Additional Summary:

Toyota ID No:
NHTSA ODI No: 8612552; 786047
Date of Incident: 20020531
Vehicle: 2002 TOYOTA ECHO
Location of Incident: DIXEXEL, MO
NHTSA Summary:
WHILE DRIVING VEHICLE WILL ACCELERATE TO 40MPH WITHOUT HITTING THE GAS PEDAL. HAVE TO PUT VEHICLE IN NEUTRAL TO STOP IT. CONTACTED DEALER, CANNOT LOCATE CAUSE. *AR. THE SUDDEN ACCELERATION INCIDENCE OCCURRED THREE TIMES. THE DEALER WAS UNABLE TO DUPLICATE THE PROBLEM IN TEST DRIVING. BUT REMOVED THE CRUISE CONTROL. THE PROBLEM WAS NOT CORRECTED BY REMOVING THE CRUISE CONTROL. *TM CONSUMER STATE THAT WHILE IN HEAVY TRAFFIC THE CAR SUDDENLY ACCELERATED. THE BRAKES WOULD NOT STOP THE CAR, AND ALSO TO AVOIDED A COLLISION THE CONSUMER THEN TURN INTO A PARKING LOT WHEN IN PARKING LOT CONSUMER STATE THAT HE HAD TO PUT CAR ON NEUTRAL FROM HITTING BRICK WALL APPROX 15 FEET AWAY. CAR WAS ONLY 3 WEEKS OLD, THIS HAPPEN WITH

CRUISE CONTROL CONTROL ON BUT NOT ENGAGED. ON ANOTHER OCCASION THE CRUISE CONTROL WAS OFF WHEN TE VEHICLE SUDDENLY ACCELERATED. *MK WHILE DRIVING VEHICLE WILL ACCELERATE TO 60MPH WITHOUT HITTING THE GAS PEDAL. HAVE TO PUT VEHICLE IN NEUTRAL TO STOP IT. CONTACTED DEALER, CANNOT LOCATE CAUSE.
Additional Summary:

Toyota ID No: 20020718949
NHTSA ODI No:
Date of Incident: 20020708
Vehicle: 2002 TOYOTA, LEXUS CAMRY, CAMRY SOLARA, ES300
Location of Incident: WYNCOTE, PA
NHTSA Summary:
*** PHONE LOG 07/18/2002 02:20:06 PM AAVILA CUST STS SHE WAS LEAVING THE CAR WASH AND HER VEH STARTED WHILE IN NEUTRAL. CUST STS IT WENT ACROSS THE STREET AND SHE ENDED UP HITTING A POLE AND DAMAGED HER VEH. CUST STS SHE IS AFRAID TO DRIVE VEH AND REQUESTING A PER. CUST STS VEH IS CURR AT THOMPSON BODY SHOP. AT THOMPSON LEXUS *** NOTES 07/18/2002 02:31:02 PM AAVILA TO CARL BAYER SVC MGR FROM ANDREA AVILA 310-468-5697 PLEASE CONTACT DOM TO DISCUSS CASE. PLEASE CALL ME TO PROV STATUS, AND PLEASE CONTACT CUST WITHIN 48 HOURS OF RECEIPT OF THIS CASE. THANK YOU. *** SUBCASE 20020718949-1 CREATED 07/18/2002 02:34:15 PM AAVILA AWAIT CB FROM DLR *** EMAIL OUT 07/22/2002 06:11:06 AM CHALL ACTION TYPE: EXTERNAL EMAIL SEND TO: JANDREA_AVILA@TOYOTA.COM; CUST CLLD FOR REP. SHE WAS NOT AVAIL SO I OFFERED TO ASSIST. CUST WANTED TO KNOW IF REP KNEW WHEN THE DOM WAS GOING TO BE AVAIL. I ADV CUST THAT REP IS RESEARCHING CASE. WITHE DLR. CUST STS SHE WOULD LIKE A CB TODAY. I APOL AND ADV CUST THAT I WOULD RELAY THE MSSG BUT COULD NOT MAKE ANY COMMITS. *** EMAIL OUT 07/22/2002 10:50:56 AM CHALL ACTION TYPE: EXTERNAL EMAIL SEND TO: JANDREA_AVILA@TOYOTA.COM; CUST CLLD FOR AAVILA. SHE WAS NOT AVAIL SO I OFFERED TO ASSIST. CUST WANTS TO KNOW WHEN THE DOM IS GOING TO INSPECT THE VEH. I APOL AND ADV CUST THAT THERE ARE NO NOTES IN THE CASE ADV A SPECIFIC DATE. CUST STS SHE WOULD LIKE A CB. I ADV CUST THAT I WOULD RELAY THE MSSG BUT COULD NOT MAKE ANY COMMITS. *** EMAIL OUT 07/22/2002 01:09:56 PM CHALL ACTION TYPE: EXTERNAL EMAIL SEND TO: JANDREA_AVILA@TOYOTA.COM; CUST CLLD FOR REP. SHE WAS NOT AVAIL SO I OFFERED TO ASSIST. CUST STS THAT SHE LEFT MSSGS FOR REP YESTERDAY AND IS WAITING FOR PER. CUST STS THAT IF SHE DOES NOT HEAR FROM REP TODAY SHE WILL NEED TO SPEAK WITH REP TOMMORROW. I ADV CUST THAT I WOULD RELAY THE MSSG BUT COULD NOT MAKE ANY COMMITS. *** NOTES 07/23/2002 02:19:47 PM AAVILA *** NOTES 07/24/02 06:16:04 AM PWATERMAN250 HAVE ADV DOM, BRIAN LAUTERBACH
Additional Summary:

Toyota ID No: 20020708943
NHTSA ODI No:
Date of Incident: 20020708
Vehicle: 2002 TOYOTA, LEXUS CAMRY, CAMRY SOLARA, ES300
Location of Incident: GREAT NECK, NY
NHTSA Summary:
*** PHONE LOG 07/08/02 09:17:13 AM JCHOI
CUST STS TO 7/3 PARKED BEHIND A LONG STRING OF CARS WAITING FOR TRAFFIC LIGHT TO CHANGE. FLAT SURFACE CUST STS ENGINE SURGED AND PUT FOOT ON BRAKE AND VEH STILL WENT INTO CAR IN FRONT. CUST STS ENGINE REVED TO OVER 6K RPM. CUST STS WAS ABLE TO FOP VEH INTO NEUTRAL SO IMPACT LESSENED. CUST STS WENT TO NHTSA

WEBSITE THAT HAS SEVERAL SIMILAR COMPLAINTS OF ENGINE SURGING. CUST STS ALSO HAS "MUSHY" BRAKES CUST STS LONG TIME TOY OWNER
*** NOTES 07/10/02 12:50:27 PM NYS
DPSM JOE PISTILLI CLD AND ADV CASE SHOULD BE SENT TO REGION AS PER CASE. NYS GRABBED CASE AND SENT TO NY REGION.
*** NOTES 07/11/02 04:42:49 AM SY5
CASE DISPATCHED TO HANNA DIVER
*** NOTES 07/11/02 06:18:20 AM SZ4
CASE DISPATCHED TO STS J NEIL.
*** NOTES 07/15/02 10:01:58 AM PTIMBERLAKE
CUST WANTS TO KNOW STATUS GETTING BRAKES AND ENGINE SURGE FIXED. NCR LEFT VM FOR JEREMY NEIL - NY REGION TO CALL ME. ADV CUST I WILL CALL HIM BACK ONCE I SPEAK TO JEREMY NEIL.
*** NOTES 07/15/02 10:01:25 AM PTIMBERLAKE
CUST STS ENGINE SURGE IS A COMMON CONDITION THAT HAS BEEN RECOGNIZED ON NHTSA WEBSITE WITH THE CAMRY.
*** NOTES 08/28/02 06:14:29 AM SY4
LEFT MSG FOR STS J NEIL TCO WITH STATUS OF CASE.
*** NOTES 09/02/02 12:17:59 PM NY4
LEFT VC MI, MSG FOR STS J NEIL TO ADVISE STATUS OF CASE.

*** CASE CLOSE 10/04/02 05:58:24 AM NY4
DPSM INSPECTED AND TEST DROVE VEHICLE WITH CB. VEHICLE OPERATING TO SPEC. CS UNDERSTANDS EXPLANATION AND STATES WOULD CONTACT IF ANYTHING FURTHER ARISES.
Additional Summary:

Toyota ID No:
NHTSA ODI No: 764196
Date of Incident: 20020705
Vehicle: 2001 TOYOTA RAV4
Location of Incident: SYRACUSE, NY
NHTSA Summary:
OUR RAV4 2001 ACCELERATED ON ITS OWN AFTER WE CAME TO A STOP AND RESULTED IN US CRASHING HEAD ON INTO A BRICK BUILDING WITHOUT THE AIRBAGS OPENING CAUSING TREMENDEUOUS AMOUNT OF DAMAGE TO THE BUILDING BOTH AUTOS ON EACH SIDE AND OF COURSE OUR CAR. TWO DAYS BEFORE IT ACCELERATED AGAIN AFTER WE CAME TO A COMPLETE STOP WAITING IN LINE FOR GAS JUST MISSING US CRASHING INTO A TRUCK *AK
Additional Summary:

Toyota ID No:
NHTSA ODI No: 8015215
Date of Incident: 20021007
Vehicle: 2002 TOYOTA CAMRY
Location of Incident: NORTH MIAMI BEACH, FL
NHTSA Summary:
VEHICLE WOULD INTERMITTENTLY ACCELERATE WHEN APPLYING BRAKES. DEALER WAS NOTIFIED, AND UNABLE TO DUPLICATE THE PROBLEM. FEEL FREE TO PROVIDE ANY FURTHER INFORMATION. *AK
Additional Summary:

Toyota ID No: 20020813785
NHTSA ODI No:
Date of Incident: 20020800
Vehicle: 2002 TOYOTA, LEXUS CAMRY, CAMRY SOLARA, ES300
Location of Incident: PHILADELPHIA, PA
NHTSA Summary:
*** PHONE LOG 08/13/2002 02:46:33 PM SDOBN
===FR CP====
CUST STS WAS AT A STOP LIGHT AND VEH LURCHED FORWARD. CUST STS WHEN HE WENT TO BACK UP INTO A PARKING SPACE VEH LURCHED AGAIN AND HE HIT A PARKED CAR. CUST STS TOOK VEH TO DLR WHO COULD NOT DUPLICATE CONDITION. CUST STS BOTH HE AND HIS WIFE WERE IN VEH WEARING THEIR SEATBELTS AND THERE ARE NO INJURIES TO THEM AND THE PARKED CAR WAS EMPTY. LEGAL REQUESTS FIELD CONTACT REPORT WITH MANY INTERIOR AND EXTERIOR PHOTOS
*** NOTES 08/14/02 00:02:46 AM CAT1
CONTACTED CUS FOR VERIFICATION OF LOCATION OF VEH. VEH AT CHAMPION TOYOTA IN PHILADELPHIA. ADV'D CUS OF 30 DAYS TO DO INSPECTION AND ADDITIONAL 30 DAYS TO COMPLETE REPORT. CUS VERY UNHAPPY ABOUT THIS, DOES NOT WANT TO WAIT TO GET VEH FIXED.
*** NOTES 08/14/02 12:19:34 PM CAT1
DSPM NOTIFIED THAT HER NEXT VISIT TO CHAMPION TOYOTAS WOULD NOT BE UNTIL LATER IN SEPTEMBER.

*** CASE CLOSE 08/21/02 09:30:50 AM CAT1
CLLD CUS TO GIVE DATE OF INSPECTION. CUS ADVISED THEY FOUND OUT THAT IT WS NOTHING WRONG WITH THE VEHICLE AND THEY WERE HAVING IT REPAIRED. PER CUSTOMER - CANCEL INSPECTION.
Additional Summary:

Toyota ID No:
NHTSA ODI No: 780004
Date of Incident: 20020800
Vehicle: 2001 TOYOTA TACOMA
Location of Incident: TUCSON, AZ
NHTSA Summary:
I WAS BACKING OUT OF A STORE IN SAN CARLOS MEXICO. I STARTED THE TRUCK, APPLIED THE BRAKE AND PUT THE TRUCK INTO REVERSE. THE TRUCK ACCELERATED BACKWARD OUT OF CONTROL AND STRUCK A CEMENT POST IN THE PARKING LOT AND CAME TO A STOP. THE ENGINE CONTINUED TO INCREASE IN RPMS. I TRIED TO PUT THE TRUCK INTO PARK. THE GEAR SHIFT MOVED AND THE TRUCK BEGAN TO ACCELERATE FORWARD. THE BRAKE WAS UNRESPONSIVE AND THE ENGINE CONTINUED TO INCREASE IN RPMS. THE TRUCK ACCELERATED FORWARD OUT OF CONTROL JUMPING A PARKING CURB AND CRASHED INTO THE FRONT OF THE STORE. THE AIRBAGE DEPLOYED. THE FRONT PASSENGER SUSTAINED A FRACTURED FOOT. ONE OF THE REAR PASSENGERS SUFFERED A CONTUSION TO HER FOREHEAD. THERE WAS SIGNIFICANT DAMAGE DONE TO THE FRONT END OF THE TRUCK AND DAMAGE DONE TO THE STORE FRONT. I HAVE NOT BEEN ABLE TO ASSESS THE DAMAGE TO THE TRUCK OR INVESTIGATE THE CAUSE OF THE ACCIDENT BECAUSE THE TRUCK IS STILL BEING HELD IN MEXICO BY THE AUTHORITIES. PT
Additional Summary:

Toyota ID No:

NHTSA ODI No: 9030241
Date of Incident: 20020810
Vehicle: 2002 TOYOTA HIGHLANDER
Location of Incident: LA HABRA, CA
NHTSA Summary:
CONSUMER STATES THAT WHILE DRIVING THE THROTTLE WILL STICK. DEALER NOTIFIED. *MR
Additional Summary:

Toyota ID No:
NHTSA ODI No: 9697159
Date of Incident: 20020811
Vehicle: 2002 TOYOTA CAMRY
Location of Incident: BAGDAD, KY
NHTSA Summary:
UNRELIABLE THROTTLE RESPONSE FROM STOPPED OR SLOWLY ROLLING. SOMETIMES RESPONDS SMARTLY, MOST OF THE TIME HESITATES AND/OR RESPONDS THEN HESITATES. SOMETIMES LETTING YOU LINGER FOR A SECOND OR TWO PARTIALLY ACROSS TWO LANES(SUPRIZE(DEST) BUT YOU NEVER KNOW WHEN THIS THING IS GOING TO DO IT TO YOU. INCINTS ARE CONTINUOUS. DEALER SAYS NOTHING WRONG. OF COURSE THEY ALSO SAID MY DRIVER POWER SEAT DOES NOT MOVE OR SLIP. FOUND THE SB ON THAT, WILL PROVIDE THEM A COPY NEXT TIME IN FOR SERVICE.*AK
Additional Summary:

Toyota ID No:
NHTSA ODI No: 10070719
Date of Incident: 20020814
Vehicle: 2002 TOYOTA CAMRY
Location of Incident: MONROE TOWNSHIP, NJ
NHTSA Summary:
WHILE DRIVING VEHICLE SUDDENLY ACCELERATED UNCONTROLLABLY. CONSUMER WAS ABLE TO MAINTAIN CONTROL OF THE VEHICLE AND DROVE IT TO THE DEALER FOR INSPECTION. HOWEVER, MECHANIC WAS NOT ABLE TO DUPLICATE OR RESOLVE THE PROBLEM. *AK
Additional Summary:

Toyota ID No:
NHTSA ODI No: 10022535
Date of Incident: 20020814
Vehicle: 2002 LEXUS ES300
Location of Incident: MAMARONECK, NY
NHTSA Summary:
2002 LEXUS MALFUNCTIONING BRAKE SYSTEM. *MR. THE ENGINE SURGED WHILE BRAKING. IT WAS INDICATED THAT THIS MAY BE DUE TO AN INCREASE IN IDLING SPEED WHEN THE A/C WAS OPERATING. ON ONE OCCASION THE VEHICLE CONTINUED TO MOVE ALTHOUGH THE CONSUMER APPLIED EXTREME PRESSURE ON THE BRAKE PEDAL. *SCC
*NLM
Additional Summary:

Toyota ID No: 20020919861
NHTSA ODI No:

Date of Incident: 20020814
Vehicle: 2002 TOYOTA LEXUS ES300
Location of Incident: MAMARONECK, NY
NHTSA Summary:
*** PHONE LOG 09/19/02 02:35:50 PM EGXFORD CUST HAS 02 ES300. INCIDENT TOOK PLACE 8/14. CUST ATTEMPTED TO BRAKE BUT VEH WOULD NOT STOP. CUST HIT BUMPER OF LARGE TRUCK. MR. EAGELFELD WAS DRIVING AT 5 MPH. THEN MRS. EAGELD WAS DRIVING ON 9/9 INTO GARAGE AND BRAKE PEDAL WENT ALL THE WAY TO THE FLOOR. CUST IS CONCERNED ABOUT THE SAFETY. VEH IS CURRENTLY AT GREENWICH LEX DLR FOR REPAIR. ADV CUST I WILL CONTACT AND CB. *** NOTES 09/19/02 02:46:08 PM EGXFORD ALSO, CUST SAID MOTOR SOMETIMES SURGES AT STOPLIGHTS AND CUST HAS TO PRESS HARD ON THE BRAKE TO KEEP VEH FROM MOVING INTO INTERSECTION. CUST SENT A LTR, AND WILL BE FAXING THAT LTR AND SOME OTHER ITEMS. *** NOTES 09/19/02 02:51:52 PM EGXFORD TO: ANDREW ROSSELLI CSM (203) 869-6700, FROM: ED OXFORD 310-646-2100. PLEASE ADV YOUR DIAGNOSIS OF THE BRAKE ISSUE. *** SUBCASE 20020919161-1-CREATED 09/19/02 02:53:56 PM EGXFORD *** PHONE LOG 09/19/02 03:01:17 PM EGXFORD ACTION TYPE: OUTGOING CALL LFT VM MSG FOR CSM TO CB REGARDING CASE. *** PHONE LOG 09/20/02 05:38:24 AM EGXFORD ACTION TYPE: INCOMING CALL RECD VM MSG FROM CSM WHO SAID HE CAN FIND NOTHING WRONG W/ BRAKES. CSM SAID HE HAS NEVER HEARD OF A HARD BRAKE AND SOFT BRAKE INSTEAD BOTH HAPPENING ON THE SAME VEH. *** PHONE LOG 09/20/02 01:31:09 PM EGXFORD ACTION TYPE: OUTGOING CALL LFT VM MSG FOR CSM CONTACT DOM FOR FIB. *** PHONE LOG 09/20/02 02:33:09 PM EGXFORD ACTION TYPE: OUTGOING CALL LFT VM MSG FOR DOM BRIAN REGARDING FIB. *** PHONE LOG 09/23/02 11:04:13 AM EGXFORD ACTION TYPE: OUTGOING CALL CALLED BRIAN LAUTERBACH DOM WHO SAID FIB NEEDS TO INSPECT VEH. BRIAN WILL CONTACT ILR TO SEE IF VEH IS REPAIRED. IF VEH ALREADY REPAIRED, CAN'T DO INSPECTION. *** PHONE LOG 09/23/02 07:47:18 AM EGXFORD ACTION TYPE: OUTGOING CALL LFT VM MSG FOR CSM TO CB. *** EMAIL OUT SRTIAD 09/01/03 PM EGXFORD ACTION TYPE: INTERNAL EMAIL SENT TO: JEFWARD, OXFORM@TOYOTA.COM CUST CALLED TO REQ STATUS OF CASE, ADV CUST STILL RESEARCHIN
Additional Summary:

Toyota ID No:
NHTSA ODI No: 10017345
Date of Incident: 20020815
Vehicle: 2002 LEXUS ES300
Location of Incident: SARASOTA, FL
NHTSA Summary:
WHILE PULLING INTO PARK WITH FOOT ON THE BRAKES, VEHICLE SUDDENLY ACCELERATED AND HIT A TREE. ALSO WHILE DRIVING IN CRUISE CONTROL, TAPPED ON BRAKES TO DISENGAGE CRUISE CONTROL AND VEHICLE SUDDENLY ACCELERATED.*AK DEALER CHECKED VEHICLE AND COULD NOT FIND ANY PROBLEMS. *SLC
Additional Summary:

Toyota ID No:
NHTSA ODI No: 10014976
Date of Incident: 20020816
Vehicle: 2001 TOYOTA TACOMA
Location of Incident: MIAMI, FL
NHTSA Summary:
WHILE MAKING A TURN AT A LOW SPEEDS AND ON A FLAT SURFACE, THE VEHICLE WILL ACCELERATE WITH NO WARNING, CAUSING CONSUMER TO HAVE AN ACCIDENT. DEALER NOTIFIED. *AK WHILE MAKING A TURN THE VEHICLE SUDDENLY ACCELERATED

CAUSING THE DRIVER TO LOOSE CONTROL OF THE VEHICLE ANT HIT A FENCE. AS A RESULT ALL 3 OCCUPANTS SUSTAINED INJURIES. *SCC
Additional Summary:

Toyota ID No: 20040113129
NHTSA ODI No:
Date of Incident: 20020831
Vehicle: 2002 TOYOTA, LEXUS CAMRY, CAMRY SOLARA, ES300
Location of Incident: TAMARAC, FL
NHTSA Summary:
*** PHONE LOG 03/15/2004 02:05:48 PM LESPINOZA
----RTSP====CUST STS WAS IN VEHICLE BACKING OUT OF A PARKING SPACE, VEH WAS IN REVERSE. STS APPLIED THE BRAKE AND SHIFTED INTO DRIVE, STS LET FOOT OFF BRAKE AND BEFORE HE COULD APPLY THE ACCELERATOR, VEH SURGED FORWARD CUST STS TRIED TO APPLY THE BRAKE BUT IT RESPONDED. STS HIS VEH DOESNCED OFF 4-5 OTHER VEHICLES, THEN CAME TO A STOP. CUST STS WORE SEAT BELT.
*** NOTES 03/15/2004 02:39:13 PM LESPINOZA
LEGAL REQ/STS FILL CONTACT REPORT W/ MANY INTERIOR AND EXTERIOR PHOTOS.
*** NOTES 03/16/04 05:09:02 AM SETT
CASE ASSIGNED TO ROSEMARY IANNITTI SETS
*** NOTES 03/16/04 11:15:13 AM SETS
REQ LM FOR CUST ON 3/16 AT 2:13. STD NEEDED TO CONFIRM VEH LOCATION. REQ NAME, ADDRESS AND PHONE NUMBER OF VEH LOCATION. REQ CB.
*** NOTES 03/18/2004 03:28:24 PM PTIMBERLAKE
++OUTGOING CURT++ NCR RETURNING VM FROM CUST. NCR SPOKE TO WIFE - REITH WHO WANTED SSC INFO RELATING ACCELERATION PROBLEM. NCR ADV NO SSC'S. ADV VEH WILL BE INSPECTED WITHIN 20 DAYS FROM - 3/15/04
Additional Summary:

Toyota ID No:
NHTSA ODI No: 767212
Date of Incident: 20020900
Vehicle: 2002 TOYOTA CAMRY
Location of Incident: STATEN ISLAND, NY
NHTSA Summary:
ON MY 2002 TOYOTA CAMRY XLE WHEN I PRESSED ON THE BRAKE THE OTHER DAY (I HAVE BEEN DRIVING FOR OVER 40 YEARS) MY CAR KEPT GOING INSTEAD OF STOPPING! IT TURNED OUT THAT I WAS PRESSING ON THE BRAKE AS WELL AS THE ACCELERATOR PEDAL SINCE THEY ARE ALMOST ON THE SAME LEVEL AS WELL AS BEING CLOSE TO EACH OTHER. ACTUALLY, WHEN THE BRAKE IS DEPRESSED THE ACCELERATOR PEDAL IS ACTUALLY HIGHER WHICH ALLOWS FOR THE CAR TO MOVE FORWARD WHILE STILL DEPRESSING THE BRAKE PEDAL! THIS SEEMS TO BE AN INCREDIBLY DANGEROUS SITUATION. WHILE GETTING ACCUSTOMED TO DRIVING THIS NEW CAR I FOUND IT UNCOMFORTABLE AT TIMES TO GET MY RIGHT FOOT IN THE PROPER POSITION TO DRIVE SAFELY. MAYBE IT'S BECAUSE OF THIS DEFECT. WHAT DO YOU THINK?*AK
Additional Summary:

Toyota ID No: 20020918202
NHTSA ODI No:
Date of Incident: 20020900
Vehicle: 2002 TOYOTA, LEXUS CAMRY, CAMRY SOLARA, ES300
Location of Incident: SMITHTOWN, NY

NHTSA Summary:
*** PHONE LOG 09/18/2002 07:59:10 AM DACADEMIA CUST ATTENDING A FUNERAL, PULLED INTO A PARKING SPACE, HER HUSBAND PUT FOOT ON THE BRAKE & CAR WOULDN'T STOP, THEY HIT A BUSH & THE WALL OF THE FUNERAL HOME. EVERYONE HAD THEIR SEATBELTS ON & BY SOME DIRECT THEY WOULD HAVE GONE THROUGH A WINDSHIELD. HER HUSBAND HURT HIS CHEST & ARM & CUST & HER MOTHER IN LAW WENT TO HOSPITAL. POLICE TOOK A REPORT. VEH TOWED TO PERFORMANCE AUTOBODY. ILR REFERRED HER TO CB TO REPORT ACCIDENT & SETUP INSPECTION FOR UNINTENDED ACCELERATION. *** NOTES 09/18/2002 08:10:14 AM DACADEMIA CUST STS THE ILR REQ SSR CALL CB TO SETUP INSPECTION & ADV THIS NEEDS TO BE DONE BEFORE BODYSHOP TOUCHES THE VEH. CUST DOESN'T KNOW WHAT TO DO OR TELL THE BODYSHOP B/C SHES NEVER BEEN INVOLVED IN A CAR ACCIDENT. *** PHONE LOG 09/18/2002 08:30:19 AM DACADEMIA ACTION TYPE: OUTGOING CALL LFT MSG FOR CUST & REQ THE FOLLOWING INFO BEFORE HER REQUEST FOR INSPECTION IS SUBMITTED: DATE OF ACCIDENT LOCATION OF ACCIDENT (STREET, CITY, STATE) ROAD CONDITIONS INJURIES NAME OF DR & HOSPITAL NAME OF POLICE & REPORT # IF APPLICABLE NAME OF INSURANCE CO. NAME, ADDRESS, PHONE # OF BODYSHOP WHERE VEH IS CURRENTLY LOCATED. *** PHONE LOG 09/18/2002 08:30:06 AM DACADEMIA ACTION TYPE: INCOMING CALL CUST CB & PROVIDED ACCIDENT INFO. (I COMPLETED THE LEGAL TAB). *** NOTES 09/18/2002 08:20:00 AM DACADEMIA TO: BRIAN LAUTERBACH, DSPM & KARLEN ROTOLA, CS ADMINISTRATOR FROM: DENISE ACADEMIA, LCE REF [1]:60 8275 CUST REQ AN INSPECTION FOR VEH THAT WAS IN AN ACCIDENT & CUST STS IT WAS UNINTENDED ACCELERATION. RAV LYE LEXUS REFERRED CUST TO LCE VEH IS CURR AT PERFORMANCE AUTOBODY, 104 ARLINGTON AVENUE, ST. JAMES, NY 11780 (631) 261-9404. PLEASE SETUP A FIB & CALL ME IF YOU NEED FURTH ASSIST. THANK YOU. *** PHONE LOG 09/18/2002 08:20:28 AM DACADEMIA ACTION TYPE: OUTGOING CALL LFT VMAIL MSG FOR DOM, BRIAN LAUTERBACH, & ADV THAT CUST IS REQ VEH INSPECTION. REQ HE SETUP FIB & TO CALL ME IF HE HAS QUEST. *** PHONE LOG 09/18/2002
Additional Summary:

Toyota ID No:
NHTSA ODI No: 10061394
Date of Incident: 20020901
Vehicle: 2002 TOYOTA CAMRY
Location of Incident: LOMPOC, CA
NHTSA Summary:
I HAVE HEARD AD/OR THE PROBLEM THE TOYOTA CAMRY HAS WITH SPEED SURGES. I HAVE HAD A PROBLEM BUT IDENTIFIED THE CAUSE QUITE HEAVILY. THE BRAKE PEDAL IS LOCATED TOO CLOSE TO THE THE GAS PEDAL AND AT ABOUT THE SAME LEVEL AFTER CATCHING MYSELF SEVERAL TIMES STEPPING ON THE GAS PEDAL WHEN I INTENDED TO STEP ON THE BRAKE I HAVE LEARNED TO BE VERY CAREFUL WHEN SWITCHING FROM ONE TO THE OTHER. IN THE CASES WHERE THE MISTAKE DID OCCUR I WAS QUICKLY AWARE OF WHAT WAS HAPPENING AND THERE WAS NO INCIDENT OR ACCIDENT INVOLVED. AM SUBMITTING THIS AS IT MAY BE WHAT HAS OCCURED IN SOME OF THE INSTANCES OF UNANTICIPATED DRIVE SURGE. I HAVE FILLED IN A DATE OF OCCURANCE BUT IT OCCURED A FEW TIMES AFTER I BOUGHT THE VEHICLE AND I DON'T REMEMBER THE EXACT DATES. *AK
Additional Summary:

Toyota ID No:
NHTSA ODI No: 10005862
Date of Incident: 20020904
Vehicle: 2003 TOYOTA TUNDRA

Location of Incident: NATICK, MA
NHTSA Summary:
TOYOTA CAMRY 2002 MODEL: PROBLEM OBSERVED 6 MONTHS AFTER I BOUGHT THE BRAND NEW CAR. BRAKE PROBLEM! CAR ACCELERATES. REPORTED TO THE DEALER AND THEN TO THE COMPANY; NOTHING HAS BEEN DONE. I TOLD THEM "I AM SCARED TO DEATH TO DRIVE THIS CAR BECAUSE SOMETIMES I CANNOT STOP THE CAR".*AK
Additional Summary:

Toyota ID No:
NHTSA ODI No: 10000034
Date of Incident: 20010910
Vehicle: 2000 TOYOTA CAMRY
Location of Incident: STOW, OH
NHTSA Summary:
AFTER USING CRUISE CONTROL ON MY 2000 TOYOTA CAMRY AND COMING TO A STOP, THE ACCELERATOR PEDAL STICKS. WHEN YOU PROCEED FORWARD, YOU HAVE TO DEPRESS THE ACCELERATOR PEDAL HARD, CAUSING THE CAR GO FORWARD AT AN UNSAFE SPEED.
Additional Summary:

Toyota ID No:
NHTSA ODI No: 767691
Date of Incident: 20020918
Vehicle: 2002 TOYOTA RAV4
Location of Incident: LYNN, MA
NHTSA Summary:
WHEN BACKING UP, THE VEHICLE EITHER ACCELERATED OR THE GAS PEDAL GOT STUCK. TS
Additional Summary:

Toyota ID No:
NHTSA ODI No: 8019570
Date of Incident: 20020921
Vehicle: 2001 TOYOTA 4RUNNER
Location of Incident: SELKIRK, NY
NHTSA Summary:
CONSUMER STATES ATTEMPTED TO BACK OUT OF GARAGE. WHEN CONSUMER SHIFTED VEHICLE INTO REVERSE, IT SUDDENLY ACCELERATED CAUSING A COLLISION. CONSUMER ADVISED ATTEMPTED TO DEPRESS BRAKES, BUT THEY DID NOT FUNCTION. *AK VER
Additional Summary:

Toyota ID No:
NHTSA ODI No: 10024353
Date of Incident: 20020922
Vehicle: 2002 LEXUS LS430
Location of Incident: CLINTON, MD
NHTSA Summary:
WHILE DRIVING AT 50 MPH ACCELERATOR PEDAL GOT STUCK, AS A RESULT VEHICLE WAS TOTALED. DEALER NOTIFIED. *AK
Additional Summary:

Toyota ID No: 20030311231
NHTSA ODI No:
Date of Incident: 20020925
Vehicle: 2002 TOYOTA LEXUS CAMRY
Location of Incident: LEOMINSTER, MA
NHTSA Summary:
*** PHONE LOG 03/01/2003 05:27:15 PM KFARDOOST
KNW0310127-000101===^CUST STS "I BOUGHT A NEW 2002 CAMRY LE (4 CYL) IN SEPTEMBER OF 2002. I CURRENTLY HAVE 3600 MILES ON THE CAR. I HAVE AN INTERMITTENT PROBLEM WITH THE CAR. AT TIMES, WHEN I AM COMING TO A STOP THE CAR STARTS TO ACCELERATE. I HAVE TO DROP IN INTO NEUTRAL AND PRESS THE ACCELERATOR PEDAL DOWN TO CLEAR IT. IT HAS REVVED UP AS HIGH AS 6200RPM. THIS HAS HAPPENED BETWEEN 12 TO 15 TIMES. IT IS A VERY DANGEROUS SITUATION AND MY WIFE IS AFRAID TO DRIVE THE CAR.
*** NOTES 03/31/2003 05:27:54 PM KFARDOOST
>>>THE LOCAL TOYOTA DEALERSHIP HAS BEEN VERY COOPERATIVE. THE HAVE CHECKED EVERYTHING BUT CAN'T DUPLICATE THE PROBLEM BECAUSE IT IS SO INTERMITTENT.

*** SUBCASE 20030311231-1 CREATED 03/31/2003 05:42:27 PM KFARDOOST
NCR REPLIED TO CUST * <AS-HTML>
THANK YOU FOR CONTACTING TOYOTA MOTOR SALES, U.S.A., INC.<P>
WE APOLOGIZE FOR THE CONCERNS WITH YOUR 2002 CAMRY.<P>
IN ORDER TO PROPERLY ASSIST YOUR CONCERNS, WE HAVE CONTACTED THE CUSTOMER RELATIONS MANAGER AT NORM WAGNER TOYOTA TO FURTHER EVALUATE YOUR 2002 CAMRY.<P>
OUR DEALERSHIP TECHNICIANS ARE SPECIALIZED IN THE DIAGNOSIS AND REPAIR OF TOYOTA VEHICLES. THEY ARE PROVIDED WITH EXTENSIVE TRAINING AND HAVE ACCESS TO STATE-OF-THE-ART EQUIPMENT TO HELP IN THE ACCURATE DIAGNOSIS OF YOUR VEHICLE. ALSO, IF NECESSARY, WE PROVIDE ADDITIONAL SUPPORT TO ASSIST OUR TECHNICIANS IN RESOLVING UNUSUAL VEHICLE CONCERNS.<P>
PLEASE BEAR IN MIND THAT IF THE DEALERSHIP IS UNABLE TO DUPLICATE THE CONDITION, IT MAKES IT VERY DIFFICULT TO DIAGNOSE WHETHER OR NOT YOUR 2002 CAMRY HAS ANY TYPE OF CONCERN. IT MAY BE ADVANTAGEOUS FOR YOU TO TAKE THE VEHICLE TO THE DEALERSHIP AS SOON AS THE CONDITION OCCURS. HOWEVER THIS IS SOMETHING THAT YOU WOULD HAVE TO DISCUSS WITH THE DEALERSHIP. THE CUSTOMER RELATIONS MANAGER WILL CONTACT YOU BY THE END OF THE BUSINESS DAY. HOWEVER, IN THE EVENT YOU DO NOT RECEIVE ANY CONTACT FROM THE DEALERSHIP BY THIS DATE, PLEASE <A HREF =" "
Additional Summary:

Toyota ID No: 20021010752
NHTSA ODI No:
Date of Incident: 20021000
Vehicle: 2002 TOYOTA LEXUS CAMRY, CAMRY SOLARA, ES300
Location of Incident: LARGO, FL
NHTSA Summary:
*** PHONE LOG 10/15/2002 11:21:06 AM NWILSON
CUST STS HAVING CONCERNS WITH WHEN APPLYING PRESSURE TO BRAKE PEDAL CAUSES ACCELERATOR TO BE ENGAGED.
*** CASE CLOSE 10/17/02 12:14:54 RULEMGR

CUSTOMER IS BRINGING VEHICLE IN FOR OUR EVALUATION ON TUES OCTOBER 22,2002 AT 10 AM
Additional Summary:

Toyota ID No: 20021010852
NHTSA ODI No:
Date of Incident: 20021000
Vehicle: 2002 TOYOTA, LEXUS CAMRY, CAMRY SOLARA, ES300
Location of Incident: DURSE, VA
NHTSA Summary:
*** PHONE LOG 10/22/2002 11:54:48 AM HSOV
==>DEALER PRODUCT INSPECTION==== CUST WIFE DRIVING EVE NEFZIGER, AND WAS TRYING TO PARK IN SPACE TURNING RIGHT. STS WHEN REMOVED FOOT FROM GAS PEDAL TO BRAKE, BUT VEH ACCELERATED. STS HIT A 2 VEHICLES AND A CURB. STS VEH TURNED OVER DRIVERSIDE. CUST WORE SEATBELT. NO AIRBAG DEPLOY. NO MAJOR INJURIES. STS FEELS GAS PEDAL VEH IS RESPONSIBLE FOR ACCIDENT. DEALER PRODUCT INSPECTION. CONTACT DPM/REGION IF NECESSARY.

*** CASE CLOSE 10/25/02 11:09:57 AM DLR45955
INSPECTED WRECKED VEHICLE ON 10-14-2002. NO DIAGNOSTIC FAULT CODES PRESENT IN ENGINE MANAGEMENT OR ABS SYSTEMS. ENGINE OPERATION NORMAL. INIMAL INSPECTED OPERATION OF ELECTRONIC THROTTLE CONTROL SYSTEM, INSPECTED USING SCAN TOOL FOR THROTTLE AND ACCELERATOR POSITION SENSOR OPERATION. ALL OPERATING NORMALLY. NO EVIDENCE OF MECHANICAL MALFUCTION. PERFORMED STALL TEST BY FLOORING ACCELERATOR PEDAL WHILE HOLDING PRESSURE ON BRAKE PEDAL. VEHICLE DID NOT MOVE UNTILL ER BRAKE WAS RELEASED. ALL OPERATION NORMAL AT TIME OF INSPECTION, NO MALFUNCTION VERIFIABLE.

Additional Summary:

Toyota ID No: 20021019113105
NHTSA ODI No:
Date of Incident: 20021000
Vehicle: 2002 TOYOTA, LEXUS CAMRY, CAMRY SOLARA, ES300
Location of Incident: GLENDALE, CA
NHTSA Summary:
*** PHONE LOG 10/11/2002 04:03:12 PM SHKIRHA CUST REQUIRES A KOREAN TRANSLATOR. CUST REQ VEH INSPECTION FOR UNINTENDED ACCELERATION. RX'DES LEXUS ALREADY INSPECTED VEH & DIDN'T FIND ANYTHING WRONG. CUST DOESN'T FEEL SAFE IN VEH BUT WOULD IF A LEXUS REP INSPECTS VEH. ACCIDENT HAPPENED AT THE PARK. VEH CROSSED THE FLOWER BED & HIT METAL WIRE FENCE & THEN TREE. VEH WAS ALMOST PARKED & FOOT WAS ON BRAKE WHEN VEH LAUNCHED FORWARD, POLICE CAME & POLICE STATED CUST PRESSED ON GAS & NOT BRAKE. CUST STATES POLICE WERE WRONG. *** SUBCASE 20021011113-1 CREATED 10/11/2002 04:03:31 PM SHKIRHA *** NOTES 10/11/2002 04:08:12 PM SHKIRHA USED LANGUAGE LINE KOREAN TRANSLATOR # 6684, JENNIFER TO SPEAK W CUST. CUST HAD JUST PURCHASED VEH IN AUGUST. *** PHONE LOG 10/11/2002 05:10:54 PM SHKIRHA ACTION TYPE: OUTGOING CALL LEFT VM FOR KEVIN PRATT, DOM *** PHONE LOG 10/14/2002 10:40:10 AM SHKIRHA ACTION TYPE: INCOMING CALL REC CALL FROM KEVIN PRATT, DOM. KEVIN IS CALLING FOR SOL ALLAN CLIFF TO DISCUSS CUST CONCERN. DOM & SM ARE TO CB LCS W/ UPDATE *** PHONE LOG 10/15/2002 04:01:30 PM SHKIRHA ACTION TYPE: INCOMING CALL DUM RETURNED CALL. AFTER CARE REVIEW DOM DECLINED

INSPECTION OF THE VEH. DOM SPOKE W/ SM ABOUT VEH & INSPECTION DLR DID. DOM STATES THAT DLR IS READY FOR CUST TO PICK UP VEH. *** PHONE LOG 10/15/2002 04:39:23 PM SHKIRHA ACTION TYPE: INCOMING CALL ED MCSHAN, WESTERN CBM ANALYST CLD TO CHECK ON PDI INSPECTION. INFORM THAT CASE HAS BEEN DECLINED FOR INSPECTION SINCE VEH HAS ALREADY BEEN RPRD & DLR INSPECTED VEH & NO PROBLEM WAS FOUND. *** PHONE LOG 10/16/2002 01:32:08 PM SHKIRHA ACTION TYPE: OUTGOING CALL LEFT VM FOR CUST TO CB ADV CUST: USE A KOREAN TRANSLATOR. INF CUST THAT VEH IS READY TO BE PICKED UP AT DLR. INF CUST THAT FACTORY REP REVIEWED CASE W/ LCS REP. & DLR & HAS DECLINED TO DO A PDI INSPECTION BECAUSE OF VEH STATUS; VEHICLE HAS BEEN RPRD ALREADY. THE DLR INSPECTED VEH & FOUND NOTHING WRONG, & PO
Additional Summary:

Toyota ID No:
NHTSA ODI No: 766473
Date of Incident: 20021015
Vehicle: 2002 TOYOTA 4RUNNER
Location of Incident: NORTH CHARLESTON, SC
NHTSA Summary:
OPERATING VEHICLE IN WET ROAD CONDITIONS WITH CRUISE CONTROL ON AT 55 MPH. TRACTION CONTROL WARNING LIGHT ILLUMINATED AND ENGINE TACHOMETER WENT FROM 1,200 RPM TO EXCESS OF 5,000 RPM. VEHICLE QUICKLY ACCELERATED TO 70 MPH AND WAS CONTINUING ACCELERATION WHEN OPERATOR DEPRESSED BRAKE PEDAL AND STOPPED ACCELERATION. ONLY ONE OCCURANCE AND NO RECURRENCE ON REMAINING 6 MILES TO HOME. VERY DANGEROUS TO HAVE VEHICLE QUICKLY ACCELERATE WITHOUT COMMAND FROM OPERATOR. MR.
Additional Summary:

Toyota ID No: 20021020404
NHTSA ODI No:
Date of Incident: 20021010
Vehicle: 2002 TOYOTA, LEXUS CAMRY, CAMRY SOLARA, ES300
Location of Incident: TUCSON, AZ
NHTSA Summary:
*** PHONE LOG 10/22/2002 10:17:17 AM JEETCHUM
CUST STS THAT ON 10/11 CUST WAS COMING HOME AND CUST DROVE INTO DRIVEWAY AND CUST STS THAT VEH SURGED FORWARD AND HIT A WALL. CUST STS THAT TOOK VEH TO TOYOTA DEALERSHIP AND DLR COULD NOT FIND ANYTHING WRONG WITH THE VEH. CUST STS THAT VEH IS AT BODY SHOP AND THE DLR HAS ALREADY STARTED TO REPAIR. NCR APOL, ADV THAT TOYOTA WOULD NOT BE ABLE TO INSPECT IF VEH HAS STARTED BEING REPAIRED. NCR APOL, DID NOT OPEN FCRP, AND ADV CUST TO SEND ALL INFO TO LEGAL DEPART.
*** NOTES 10/22/2002 10:17:18 AM JEETCHUM
GAVE CASE #

*** CASE CLOSE 10/22/2002 10:17:47 AM JEETCHUM
NCR APOL, DID NOT OPEN FCRP BECAUSE VEH IS BEING REPAIRED, AND ADV CUST TO SEND ALL INFO TO LEGAL DEPART. GAVE CASE #.
*** NOTES 11/20/2002 01:37:09 PM LBURRE
ATF-LTR DTD 11/12/02, RCVD 11/20/02 STS SAME CONCERNS AS ABOVE. NCR LM ADV THAT LTR WAS FORWARDED TO LEGAL, NEXT REP. IF CUST CB PLS ADV OF THIS OR GIVE LEGAL ADDRESS TO RESUBMIT.
Additional Summary:

Toyota ID No:
NHTSA ODI No: 10062235
Date of Incident: 20021017
Vehicle: 2002 TOYOTA CAMRY
Location of Incident: LAKEWOOD, NJ
NHTSA Summary:
CONSUMER WAS PARKING THE VEHICLE WITH HER FOOT ON THE BRAKE WHEN THE VEHICLE ACCELERATED. THIS RESULTED IN AN ACCIDENT. THE DEALERSHIP CANNOT LOCATE THE CAUSE OF THE PROBLEM. *JB
Additional Summary:

Toyota ID No:
NHTSA ODI No: 10107480
Date of Incident: 20021020
Vehicle: 2002 LEXUS ES300
Location of Incident: CONCORD, CA
NHTSA Summary:
WHEN THE GAS PEDAL WAS APPLIED, THE VEHICLE PAUSED FOR 1-2 SECONDS BEFORE PROCEEDING FORWARD. AS A RESULT, THE CONSUMER HAD ALMOST HIT PEDESTRIANS AND REAR ENDED OTHER MOTORISTS. IF THE CONSUMER ATTEMPTS TO SWITCH LANES TO AVOID HITTING OR REAR ENDING ANYONE, THE VEHICLE STALLS. THE VEHICLE HAS BEEN SERVICED 9 TIMES BY THE DEALERSHIP, IN WHICH DIAGNOSTIC TEST HAVE BEEN PERFORMED, BUT NO FAILURE CODE WAS FOUND. THE DEALERSHIP ONLY CONCLUSION IS THAT THIS IS HOW THE VEHICLE IS SUPPOSE TO DRIVE. *JB
Additional Summary:

Toyota ID No:
NHTSA ODI No: 10007691
Date of Incident: 20021021
Vehicle: 2002 TOYOTA CAMRY
Location of Incident: BURKE, VA
NHTSA Summary:
UNINTENDED ACCELERATION. WHILE PULLING INTO A PARKING SPACE, MY WIFE'S VEHICLE ACCELERATED TO MAXIMUM SPEED. THE CAR JUMPED OVER THE PARKING CURB AND SHE SWERVED TO MISS A BUILDING. SHE CLIPPED TWO CARS IN PASSING THEM. SWERVED AGAIN INTO AN EMPTY PARKING SPOT AND THE VEHICLE TIPPED OVER. CAR WAS TOTALED. NO ONE WAS HURT, BUT MY WIFE SUSTAINED SOME BRUISES AND GLASS SHARDS IN THE EYES. LOCAL TOYOTA DEALER LOOKED AT THE WRECK, RAN SOME ELECTRONIC DIAGNOSTICS, BUT SAID THEY WERE UNABLE TO FIND ANY MALFUNCTION.
Additional Summary:

Toyota ID No:
NHTSA ODI No: 8021365
Date of Incident: 20021022
Vehicle: 2002 TOYOTA CAMRY
Location of Incident: SAN BRUNO, CA
NHTSA Summary:
CONSUMER HAS PROBLEMS WITH THE ACCELARATOR. DEALER WAS CONTACTED. MR.
Additional Summary:

Toyota ID No:
NHTSA ODI No: 10058975
Date of Incident: 20021023
Vehicle: 2002 TOYOTA CAMRY
Location of Incident: CHICOPEE, MA
NHTSA Summary:
CONSUMER COMPLAINED THAT THE BRAKE PEDAL WAS DESIGNED TOO BIG. ON SEVERAL OCCASIONS CONSUMER ATTEMPTED TO MOVE FOOT FROM THE GAS TO THE BRAKE PEDAL WHEN THESE SOLE OOT CAUGHT UNDER THE BRAKE PEDAL. THIS CAUSED THE CONSUMER TO APPLY THE GAS PEDAL INADVERTENTLY. *AK *MR
Additional Summary:

Toyota ID No:
NHTSA ODI No: 8021608
Date of Incident: 20021024
Vehicle: 2001 TOYOTA AVALON
Location of Incident: SHIRLEY/WESTERY, MA
NHTSA Summary:
VEHICLE SUFFERED SUDDEN ACCELERATION WHEN SHIFTED FROM NEUTRAL INTO DRIVE. VEHICLE COLLIDED WITH A DOOR. DEALER AND MANUFACTURER HAS BEEN NOTIFIED. PLEASE PROVIDE FURTHER INFORMATION. TS
Additional Summary:

Toyota ID No:
NHTSA ODI No: 10083732
Date of Incident: 20021027
Vehicle: 2002 TOYOTA CAMRY
Location of Incident: MOUNT SINAI, NY
NHTSA Summary:
WHILE STOPPING AT A TRAFFIC LIGHT THE ENGINE REVVED, FOLLOWED BY SUDDEN ACCELERATION. THE CONSUMER PROCEEDED TO SLAM ON THE BRAKE PEDAL TO STOP THE ACCELERATION, BUT IT FAILED TO DO SO. VEHICLE STOPPED ACCELERATING BY ITSELF. DEALERSHIP WAS CONTACTED, BUT PROVIDED NO ASSISTANCE BECAUSE THEY WEREN'T ABLE TO DUPLICATE THE FAILURE. *AK *NM
Additional Summary:

Toyota ID No: 10021134055
NHTSA ODI No:
Date of Incident: 20021100
Vehicle: 2002 TOYOTA LEXUS CAMRY, CAMRY SOLARA, ES300
Location of Incident: MODESTO, CA
NHTSA Summary:
*** PHONE LOG 11/26/2002 04:09:22 PM CCONVB
CUST STS VEH WAS ON CRUISE CONTROL AND WHEN IT WAS TAKEN OFF, VEH PLACED IN NEUTRAL THEN DRIVE AND VEH LURCHED FORWARD AT FULL SPEED ON CUST ADN CUST ALMOST WENT INTO A HOUSE. CUST TURNED VEH OFF AND BACK ON AND HAS NOT EXPERIENCED THE CONCERN AGAIN BUT IN CONCERNED VEH MAY LURCH FORWARD AGAIN. CUST STS OLR CAN NOT FIND CAUSE OF VEH CONCERNS. CUST SEEKS POSS REGION INSPECTION WHEN REP IS IN AREA AND ETA FOR REGIONAL REP. CUST HAS NOT SPOKEN TO CRM.

*** NOTES 11/26/2002 03:30:49 PM ECAMPOS
CRM CALL REQUESTING CASE BE REDIRECTED TO REGION.
*** NOTES 12/02/03 05:10:17 PM SFI
LM ON VM. DSPM WILL FOLLOW UP.

*** CASE CLOSE 11/09/01 05:25:16 PM SFI
DSPM, C. MURPHY, REVIEWED WITH FSI J. THELLE AND WOLBAMP. FTS STD THERE IS NO KNOWN ISSUE AND ADVD TO ASSURE DLRSHIP SCANNED VEH FOR ERROR CODES. DLRSHIP STD THEY DID CK FOR CODES AND CKD BRAKES. ALL NORMAL AND WITHIN SPECS. CUST STD HE CAME TO A STOP, PUT VEH IN NEUTRAL, THEN PUT IT IN DRIVE TO PROCEED AND VEH MOVED FORWARD QUICKLY. (THIS MAY HAVE BEEN DUE TO THE CUST ENGAGING DRIVE FROM NEUTRAL WITH NO BRAKE.) DSPM ADVD CUST TO ENSURE VEH IS IN PARK WHEN AT STOP AND FOOT IS OFF THE BRAKE. CUST STD HE WOULD DO SO. CUST CONTD TO SAY VEH ACCELERATED WHEN HE ATTEMPTED TO PRESS THE BRAKE PEDAL. DSPM THIS MAY HAVE BEEN DUE TO THE CUST ACCIDENTALLY PRESSING GAS PEDAL. DSPM ADVD CUST THERE HAS NOT BEEN ANY ISSUE TOYOTA KNOWS OF RE SDS SITUATION. DSPM ADVD DLRSHP INSPECTED VEH AND TEST DROVE TO ENSURE VEH IS OPERATING NORMALLY. CUST STD HE'S SATISFIED AND WCONTACT DLRSHP IF ISSUE RECURS.
Additional Summary:

Toyota ID No: 20050040155S
NHTSA ODI No:
Date of Incident: 20021105
Vehicle: 2002 TOYOTA, LEXUS CAMRY, CAMRY SOLARA, ES300
Location of Incident: KEARNS, UT
NHTSA Summary:
*** PHONE LOG 08/01/2003 09:59:10 AM QHOLMES
====FCRP====
PATRICIA DRIVESR (ONLY ON IN VEH), STS HAD HER SEATBELT ON. STS DRIVING IN PARKING LOT (5245 WEST, WEST JORDAN, UT). STS TURN DOWN A AISLE (RT), APPLIED BRAKES WHEN CUST HEARD ENGINE SUDDENLY ACCELERATE & STS HER VEH FRT DRIVERS SIDE BUMPER HIT ANOTHER VEH FTR DRIVERS SIDE BUMPER. STS THEN HIT A PARKED TRUCK WHER FTR BUMPER. STS AIR BAGS DID NOT DEPLOY. STS TRAVELING 5-5MPH. LEGAL REQUESTS FCRP WITH MANY INTERIOR AND EXTERIOR PHOTOS

*** CASE CLOSE 06/12/01 01:11:11 PM DVB4
FTS, JOE LANE, INSP VEH 06/06/01. OPENER NOT PRESENT. FTS STATES: DSRP THE ABS AND ENGINE/ECT ECU FOR OTCS AND NONE WERE PRESENT. TEST DROVE VEHICLE AROUND PARKING LOT AND DID SEVERAL PANIC STOPS. THE ABS SYSTEM OPERATED PROPERLY ON EACH STOP. DURING MY TEST DRIVE THROUGH THE PARKING LOT I DID NOT EXPERIENCE A PROBLEM WITH THE ACCELERATOR PEDAL, THE ENGINE REVVING UP, OR THE VEHICLE ACCELERATING ON ITS OWN. INSP THE BRAKE VACUUM BOOSTER, MASTER CYLINDER, BRAKE PEDAL, FRONT CALIPERS, REAR DRUM BRAKES AND ABS ACTUATOR FOR PROPER INSTALLATION AND OPERATION. FOUND ALL COMPONENTS TO BE PROPERLY INSTALLED AND OPERATING PROPERLY. INSP THE ENTIRE BRAKE SYSTEM FOR LEAKS. FOUND NO LEAKS AND FOUND THE BRAKE/MASTER CYLINDER TO BE FULL OF FLUID. RESULTS COMM TO CUST 06/07/03.
Additional Summary:

Toyota ID No:
NHTSA ODI No: 10060020
Date of Incident: 20021100

Vehicle: 2002 TOYOTA AVALON
Location of Incident: BROOMALL, PA
NHTSA Summary:
WHEN USING THE CRUISE CONTROL ON A DOWNGRADE, THE VEHICLE ACCELERATES UP TO 20 MPH. IT SEEMS AS IF YOU ARE GOING OUT OF CONTROL. THE VEHICLE DOES NOT DOWNSHIFT AT ALL.
Additional Summary:

Toyota ID No:
NHTSA ODI No: 10062561; 10063318
Date of Incident: 20021109
Vehicle: 2002 TOYOTA CAMRY
Location of Incident: WALTHAM, MA
NHTSA Summary:
ON THE DATE BELOW, I WAS DRIVING ON A HIGHWAY WHEN MY BRAND NEW CAMRY WENT OUT OF CONTROL AND SPED UP, SENDING THE CAR THROUGH A GUARD RAIL. MY CAR ENDED UP ON THE OTHER SIDE OF THE HIGHWAY GOING IN THE OPPOSITE DIRECTION. I HAVE A PERFECT DRIVING RECORD, AND HAVE NEVER EVER HAD A TICKET. I BELIEVE THAT MY CAR HAD THE ACCELERATION PROBLEM THAT I'VE BEEN READING ABOUT. I HAD CONTACTED TOYOTA WHEN THE ACCIDENT FIRST OCCURRED. THEY SENT SOMEONE OUT WHO CHECKED THE TIRES AND THE STRIKING, AND A FEW MINOR THINGS. NO ONE TESTED ANYTHING TO DO WITH ACCELERATION. THE CAR WAS TOTALED, AND I WAS TAKEN BY AMBULANCE TO A TRAUMA CENTER, WHERE I WAS HOSPITALIZED. I AM NOW DRIVING A 2003 CAMRY, AND I FEEL LIKE I'M DRIVING A TIME BOMB, SINCE I READ THAT THE PROBLEM MAY EXIST IN BOTH THE 02 AND 03 MODELS. *AK, SEE VOQ 10068318, *DSY; WHILE DRIVING VEHICLE SUDDENLY ACCELERATED. DRIVER LOST CONTROL AND HIT A GUARD RAIL. THE VEHICLE WAS TOTALED. *AK. THE DRIVER SUFFERED FROM POST CONCUSSION SYNDROME AND STILL EXPERIENCES DIZZINESS, PROBLEMS WITH BALANCE, TREMORS, HEADACHES, NECK AND BACK PAIN AND MEMORY LOSS. THE CONSUMER IS STILL UNDER THE CARE OF SEVERAL MEDICAL PROFESSIONALS AND CONTINUES TO UNDERGO TESTING. *NM. SEE VOQ 10062561. *DSY
Additional Summary:

Toyota ID No: 8022259
NHTSA ODI No:
Date of Incident: 20021111
Vehicle: 2002 TOYOTA CAMRY
Location of Incident: MAPLE HEIGHTS, OH
NHTSA Summary:
CONSUMER STATES WAS DRIVING ON HIGHWAY WITH CRUISE CONTROL ENGAGED. ATTEMPTED TO DISENGAGE BY DEPRESSING BRAKE PEDAL TO NO AVAIL. CONSUMER HAD TO SWERVE VEHICLE THROUGH TRAFFIC TO AVOID A COLLISION. AS A RESULT THE FRONT PASSENGER WHEEL CAME OFF SLOWING CAR DOWN ENOUGH FOR CONSUMER TO DOWNSHIFT GEARS. TS
Additional Summary:

Toyota ID No: 20031112012S; 20040204057S
NHTSA ODI No:
Date of Incident: 20021111
Vehicle: 2002 TOYOTA, LEXUS ES300
Location of Incident: ROCKVILLE, MD
NHTSA Summary:

*** PHONE LOG 11/12/2003 07:21:32 AM MHELFFRICH CUST STATED SHE HAS BEEN WORKING W/ GM AT LEXUS OF ROCKVILLE REGARDING ACCIDENT SHE WAS IN B/C OF HER 2002 ES 300. CUST STATED SHE WAS PULLING INTO PARKING LOT, MADE LEFT TURN TO PULL INTO PARKING SPOT, VEH JUMPED CURB AND HIT A TREE. CUST STATED SHE HAS HAD ACCELERATION ISSUES SINCE DAY SHE PURCHASED VEH. CUST STATED SHE FEELS VEH CAUSED ACCIDENT. CUST STATED CURG INSPECTED VEH, ADVISED THERE WAS NOTHING WRONG W/ VEH & SHE MUST OF HIT GAS PEDAL. *** NOTES 11/12/2003 07:22:47 AM MHELFFRICH CUST STATED SHE NEVER RECEIVED ONP LETTER ABOUT UPDATE & ONLY FOUND OUT ABOUT IT AFTER RESEARCHING. CUST STATED SHE CONTACTED NHTSA & WHEN SHE ADVISED DLR OF HER RESEARCH, THEY DENIED ISSUES UNTIL SHE PULLED OUT RESEARCH & THEN ADMITTED LEXUS HAS HAD ISSUES W/ TRANSMISSION. CUST ADVISED GM OF DLR CALLED PAT MITCHELL IN AREA OFFICE. CUST DEMANDED FOR PHONE NUMBER FOR P MITCHELL & DEMANDED A CALL BACK W/ IN 24 HOURS W/ ASC/UPDATE & INSPECTION/RESN NAME *** SUBCASE 20031111101215-1 CREATED 11/12/2003 07:21:06 AM MHELFFRICH *** NOTES 11/12/2003 07:26:11 AM MHELFFRICH *** PHONE LOG 11/12/2003 07:29:21 AM MHELFFRICH ACTION TYPE: OUTGOING CALL LEFT V-MAIL FOR PAT MITCHELL, CS MANAGER IN AREA OFFICE AS A HEADS UP CUST WAS TRYING TO GET AHOLD OF HER SINCE GM GAVE HER NAME TO CUST AS THE CONTACT ON ISSUES. *** PHONE LOG 11/12/2003 07:34:45 AM MHELFFRICH ACTION TYPE: OUTGOING CALL SPOKE W/ KAREN ROTOLA. ADVISED I AM DISPATCHING CASE TO AREA OFFICE. *** NOTES 11/12/03 10:57:54 AM KROTOLA330 I PUT THE REQUEST FOR THE FIX ON OUR LOG FOR THE FIX TO INSPECT. ONCE IT IS SCHEDULED I WILL UPDATE CASE ACCORDINGLY. BRANT BARD SHOULD BE THE FIX TO INSPECT. *** EMAIL OUT 11/12/2003 01:38:02 PM ABRILON ACTION TYPE: EXTERNAL EMAIL SENT TO: [MELISSA_MELFFRICH@TOYOTA.COM] CUST CALLED TO UPDATE INFO WITH REP. CUST STD THAT REP HAS REQUESTED INSURANCE CLAIM INFO FOR INSURANCE CLAIM # 310482674, ADJUSTER NAME LAUREN AT 888-822-7435X 6164. *** PHONE LOG 02/04/2004 09:39:04 AM BHOLLINSWORTH REFER TO CASE#20041112101215. CUST STS SHE WAS PARKING HER VEHICLE WHEN IT SUDDENLY ACCELERATED AND JUMPED THE CURB AND HIT A TREE. CUST BELIEVES THAT VEH MALFUNCTIONED AND REQUESTED LEXUS TO INSPECT THE VEHICLE. AREA PERFORMED FIR ON 12/4/03 AND FOUND NO DEFECTS IN WORKMANSHIP OR MATERIALS. CUST DISSAT WITH LEXUS RESPONSE AND REQUESTED LETTER OF POSITION. CUST BELIEVES THAT OTHER LEXUS VEHICLES HAVE OPERATED LIKE MERS AND WOULD BE IN CONTACT WNHTSA. *** CASE CLOSE 02/04/2004 10:01:40 AM BHOLLINSWORTH REFER TO CASE#20041112101215. CUST INVOLVED IN AN ACCIDENT WHEN VEHICLE JUMPED CURB AND HIT A TREE. CUST STS VEH ACCELERATED BY ITSELF AND REQUESTED INSPECTION OF THE VEHICLE. AREA PERFORMED FIR AND FOUND NO DEFECTS IN MATERIALS OR WORKMANSHIP. ADVISED CUST OF FINDINGS AND THAT NO FURTHER ASST WOULD BE PROVIDED. CUST DISAGREES WTHFINDNS AND ADVISED SHE WOULD PURSUE WOTHER AGENCIES INCLUDING NHTSA. LETTER OF POSITION MAILED TO CUSTOMER.

Additional Summary:

Toyota ID No: 20031219151
NHTSA ODI No:
Date of Incident: 20021112
Vehicle: 2003 TOYOTA, LEXUS CAMRY, CAMRY SOLARA, ES300
Location of Incident: LAKEWORTH, FL
NHTSA Summary:
*** PHONE LOG 12/29/2003 04:39:29 PM JIAMESON CUST TOOK VEH TO DLR A COUPLE WEEKS AGO B/C WARNING LIGHT WAS ON. CUST STS DLR REPRD VEH. SAME DAY VEH WAS TAKEN HOME, VEH WAS ABOUT TO BE STOPPED AND VEH LUNGED FORWARD TX. CUST STS THEY DIDN'T DRIVE VEH MUCH BUT IT WAS OK AFTER THAT. CUST STS THAT TODAY THEY WERE PULLING INTO DISABLED PARKING AND VEH LUNGED FORWARD AND WENT OVER

CEMENT BARRIER AND HIT POLE. CUST STS $1500 BODY ESTIMATE TO VEH. DLR ADV NOTHING WRONG W/ VEH, ADV IF IT HAPPENS AGAIN TO BRING BACK TO DLR. *** NOTES 12/29/2003 04:40:10 PM JIAMESON CUST IS VERY SHAKEN UP AND SCARED TO DRIVE VEH AND VERY WORRIED FOR SAFETY. CUST STS THAT HE SPOKE TO BOB BALDWIN WHO ADV VEH IS OK AND NO RPR NEEDED. *** NOTES 12/29/2003 04:41:49 PM JIAMESON TO: MATT BEATTY, SM/CSM (561) 655-7500 FROM: JAREN RIBIE, LCS 310-468-2190 CUST IS VERY WORRIED B/C VEH IS LUNGING FORWARD W/O WARNING. INCIDENT 12/29/2003 IS 2X IT HAPPENED & CAUSED $1500 DAMAGE TO VEH. CUST WOULD LIKE VEH RPRD. CUST IS SCARED TO DRIVE VEH. DLR RVW AND ESC IF RPR IS AVAIL FOR VEH AND FIX WARR BY 12/30/2003. THANK YOU. *** EMAIL OUT 12/29/2003 04:49:58 PM DCHELES ACTION TYPE: EXTERNAL EMAIL SEND TO: [JESSICA_JAMESON@TOYOTA.COM] CUST CALLED BACK & ADV HE WAS SPEAKING W/ JIAMESON & FORGOT TO PROVIDE HIS NAME, ADDRESS & PHONE NUMBER. CUST PROVIDED ALL INFO THAT IS IN THE CASE. THANKED CUST FOR CALLING & WILL RELAY INFO TO JIAMESON. *** SUBCASE 20031229151911-1 CREATED 12/30/2003 01:19:24 PM JRIBIE *** PHONE LOG 01/05/2004 09:27:39 AM JRIBIE ACTION TYPE: OUTGOING CALL LFT VM FOR MATT BEATTY CSM SEEKING ASSIST FOR CUST. *** PHONE LOG 01/06/2004 12:41:21 PM JRIBIE ACTION TYPE: OUTGOING CALL LFT MSG AT DLR TOR GAR. MEYERSON SA TO C/B TO DISCUSS VEH CONCERNS. *** PHONE LOG 01/06/2004 12:47:30 PM JRIBIE ACTION TYPE: INCOMING CALL GAR. SA AT DLR LFT VM REQ TO C/B AT 561-656-5842. *** PHONE LOG 01/13/2004 01:29:49 PM JRIBIE ACTION TYPE: OUTGOING CALL LFT END MSG AT DLR FOR GAR. MEYERSON SA TO

Additional Summary:

Toyota ID No:
NHTSA ODI No: 20021056
Date of Incident: 20021112
Vehicle: 2000 TOYOTA TUNDRA
Location of Incident: BROOKFIELD, WI
NHTSA Summary:
CONSUMER HAS AN AFTERMARKET CRUISE CONTROL(CC) KIT MANUFACTURED BY AUTOVOX. CONSUMER WAS UNAWARE OF MODEL NAME/NUMBER OF KIT. WHILE DRIVING AT APPROXIMATELY 75MPH WITH CRUISE CONTROL ENGAGED, THE VEHICLE BEGAN TO ACCELERATE WITHOUT WARNING. CONSUMER TURNED CC OFF THEN BACK ON. THIS HAPPENED OCCURRED 15 MINUTES LATER. CONSUMER ALSO ADVISED THAT ON 12/24/02 WAS DRIVING WITH CC DISENGAGED. REMOVED FOOT FROM ACCELERATOR PEDAL, BUT VEHICLE WOULD NOT DISENGRATE. CONSUMER FOUND THAT THE AFTERMARKET SPEED CONTROL UNIT HAD CAUSED THE PROBLEM AND HAD TO BE DISCONNECTED. *TT

Additional Summary:

Toyota ID No: 20021204048
NHTSA ODI No:
Date of Incident: 20021200
Vehicle: 2002 TOYOTA, LEXUS CAMRY
Location of Incident: WOODHAVEN, NY
NHTSA Summary:
*** PHONE LOG 12/04/2002 09:21:01 AM SOSVIA

-#SUP--
03 CAMRY XLE- STS THAT DRIVING ON 175 CHERRY STREET INSIDE THE PARKING LOT OF BUILDING. STS THAT STARTED DRIVING VERY SLOW 5-10 MPH. STS THAT NEXT THING IS THE VEH ACCELERATED ON ITS OWN. STS THAT VEH HIT A FENCE. STS THAT FRONT END HAS DAMAGED & POSSIBLY BOTTOM IS DAMAGED TOO FROM CEMENT DIVIDER. STS VEH

RUN OVER CEMENT DIVIDER. STS THAT HAS BACK SPASMS. STS VEH PARKED & HAS NOT BEEN RPRD. CUST REQ TO GET AN EXPLANATION ON WHY VEH ACCELERATED ON OWN *** NOTES 12/04/2002 09:51:01 AM SOSVIA
- LEGAL REQUESTS FIELD REPORT WITH MANY INTERIOR AND EXTERIOR PHOTOS
*** NOTES 12/05/02 05:23:58 AM NY3
CASE DISPATCHED TO HANNA DIVER
*** NOTES 12/05/02 06:26:10 AM NY3
CASE ASSIGNED TO FTS JEREMY NEIL.
*** NOTES 12/11/2002 07:30:16 AM CLEE
CUS STS FRUSTRATED B/C NO CONTACT FROM REGION. NCR ABOL ADV CASE DISPATCH TO FTS FOR INSPECTION. CUS SHOULD RECEIVE CALL FROM FTS. CUS RKS TO SPK TO REGION. OUTGOING CALL. NCR PLACED CUS ON HOLD W/ CUS FROM AND SPK TO HANNA DIVER NY4. REG REP ADV WILL CONTACT CUS TODAY. NCR ADV CUS CAN BE REACHED AT DAYS VIA CUS REQUEST.
*** NOTES 12/11/2002 01:45:47 PM CCONVITI
CUST STS THAT SHE IS ON FOOT AND NEEDS HER CAR AND IS UPSET THAT REGION HAS NOT CONTACTED HER FOR TWO WEEKS. NCR ABOL AND ADV PLEASE ALLOW THE REST OF BUSINESS TODAY FOR REGION TO CALL AND CONTACT CAC IF THERE IS STILL NO FOLLOW UP. CUST UNDERSTOOD.
*** NOTES 12/11/2002 02:05:52 PM APOWE
CUST CB, EXTREMELY FRUSTRATED WITH VEH COND AND NO RESPONSE FROM THE REGIONAL OFFICE. NCR APOLOGIZED. ADVD CUST OF NOTES. NCR PROVIDED MAIN NUMBER FOR REGIONAL OFFICE. CUST PLANNING TO CALL.
*** NOTES 12/12/02 09:17:21 AM NY4
FTS J NEIL CONTACTED BOTH NUMBERS FOR THE CS ON 12/11/2002. CS OFFICE WAS CLOSED DUE TO WEATHER AND NO ANSWER AT ALT NUMBER. FTS J NEIL WILL AGAIN TRY TO REACH THE CS TODAY.
*** NOTES 12/16/02 05:48:19 PM NY4
FTS J NEIL CONTACTED CS AT BOTH WORK NUMBERS AND CB HAD LEFT FOR THE DAY. THERE IS NOT A HOME NUMBER

Additional Summary:

Toyota ID No: 20021219174
NHTSA ODI No:
Date of Incident: 20021200
Vehicle: 2002 TOYOTA, LEXUS CAMRY, CAMRY SOLARA, ES300
Location of Incident: WAYSIDE, NJ
NHTSA Summary:
*** PHONE LOG 12/19/2002 09:16:18 AM DACADEMIA BRIAN CHADWICK, SM CLED & ADV CUST IS AT DLR, SPEAKING TO GM ABOUT ACCIDENT SHE HAD 3 WKS AGO. SM STS IT WAS UNDERSTOOD ACCELERATION & VEH CB TRIP AT THE DLR WHEN IT WAS DRIVEN. CUST IS UPSET & IS DEMANDING SOMEONE INSPECT THE VEH & PROVIDE A REPORT. *** NOTES 12/19/2002 12:22:42 PM DACADEMIA TO: KYLE OR SAR MAGANANI, CS ANALYST FROM: DENISE ACADEMIA, LCS REP (310) 468-2271 CUST IS REQUESTING A FTS INSPECT VEH FOR UNINTENDED ACCELERATION & COMPLETE A REPORT ASAP. THE ACCIDENT HAPPENED ABOUT 3 WEEKS AGO. PLEASE WORK W/ FTS TO SETUP AN APPT & CONTACT THE DLR TO ADVISE WHEN IT WILL BE SET. CUST IS IN A HURRY. PLEASE KEEP ME POSTED ON UPDATE & PROVIDE STATUS MSG OR DLR CLOSE NOTES. THANK YOU. *** PHONE LOG 12/19/2002 02:02:30 PM DACADEMIA ACTION TYPE: OUTGOING CALL CLD KYLE MACNAUGHTON, & HE IS THE NEW CS ANALYST. ADV THAT CASE IS BEING DISPATCHED TO HIM. *** SUBCASE 20031219102743 CREATED 12/19/2002 02:00:39 PM DACADEMIA *** NOTES 12/19/02 02:04:17 PM SMAGANANI@KYLE MACNAUGHTON - CS ANALYST - ADV REP THAT FTS WILL REVIEW CASE ON MONDAY AND WHEN AN APPOINTMENT IS SETTLED ON, THE CLARITY CASE WILL BE UPDATED. *** NOTES 12/23/02 12:05:24 PM

KMACNAU@TOY0230 ALL SEAT BELTS WERE FOUND TO BE OPERATING PROPERLY. IMPACT DID NOT MEET SRS AIRBAG DEPLOYMENT CRITERIA. THE CUSTOMER'S ALLEGATION OF UNINTENDED ACCELERATION COULD NOT BE VERIFIED. *** PHONE LOG 12/31/2002 01:05:12 PM DACADEMIA ACTION TYPE: OUTGOING CALL CLD DLR SVC DEPT & THERE WAS NO ANSWER. *** PHONE LOG 01/06/2003 01:52:48 PM DACADEMIA ACTION TYPE: OUTGOING CALL CLD SM AT 703-493-3100 & LEFT A MSG REQ A C/B TO ADV SM IF THE CUST HAS BEEN ADV OF THE VEH INSPECTION RESULTS. *** PHONE LOG 01/06/2003 09:44:01 AM DACADEMIA ACTION TYPE: OUTGOING CALL CLD SM & HE ADV THAT CUST WANTS LTR IN WRITING ADV OF THE INSPECTION RESULTS. SM ADV THAT THEY HAVE TOLD THE CUST VEH IS OPERATING AS DESIGNED. I CONFIRMED CUST ADDRESS W/SM & WILL SEND A LTR TO CUST. *** PHON

Additional Summary:

Toyota ID No: 20021229850
NHTSA ODI No:
Date of Incident: 20021200
Vehicle: 2001 TOYOTA, LEXUS CAMRY, CAMRY SOLARA, ES300
Location of Incident: NEWARK, CA
NHTSA Summary:
*** PHONE LOG 12/23/01 02:19:04 PM JRIBIE CUST HAS SMOKE COMING OUT OF EXHAUST DURING THE DAY. SEAT BELT IS MAKING NOISE LIKE A CLICKING SOUND. WANTS EXHAUST & SEAT BELT CHECKED. NOT ONLY THAT, BUT THE CUST HAS CONCERN WHEN LUNGING FORWARD WHEN AT A COMPLETE STOP. DLR ADVISED HIM THAT THIS IS NORMAL. CUST WANTS BETTER EXPLANATION FOR REASONING, & WHAT WILL BE DONE TO FIX IT. *** NOTES 12/23/02 02:23:37 PM JRIBIE TO: SHARMAIN DOMINIC CSM FROM: JAREN RIBIE LCS 310-468-2190 PLEASE CONTACT CUST TO SET UP APPOINT FOR REPAIRS. CUST HAD BAD EXPERIENCE AT MAGNUSSEN'S LEXUS OF FREMONT, & WANTS TO RETURN TO DLR WHERE VEH WAS PURCH B/C SERVICE WAS SUPERB. CONTACT ME W/ANY QUESTIONS. THANK YOU. *** SUBCASE 20021229050-1 CREATED 12/23/02 02:23:28 PM JRIBIE *** CREATED NO RESPONSE NOTE 12/27/02 06:02:11 AM JV JRIBIE THIS IS NO RESPONSE MESSAGE #1. PLEASE CALL YOUR CUSTOMER IMMEDIATELY. *** CREATE NO RESPONSE NOTE 01/02/03 05:45:27 AM JV JRIBIE THIS IS NO RESPONSE MESSAGE #2. PLEASE CALL YOUR CUSTOMER IMMEDIATELY. *** PHONE LOG 01/02/03 01:24:30 PM JRIBIE ACTION TYPE: INCOMING CALL CUST CLLD TO FIND OUT STATUS OF CONCERNS WHEN LUNGING FORWARD. CUST STS THAT VEH WAS TAKEN TO DLR, BUT NO FIX WAS MADE. ADV CUST THAT I WAS STILL WAITING FOR RESP FROM DLR. *** EMAIL OUT 01/03/03 02:01:43 PM TSUBJANI ACTION TYPE: EXTERNAL EMAIL SEND TO: [JAREN_RIBIE@TOYOTA.COM] CC LIST: [NOBODY01] CUST CLLD BACK TO SPEAK TO JRIBIE. APOL TO CUSTR. ADV REP NOT AVAIL. OFFER TO ASST. CUST STS RECENTLY HAS SVC DONE AT LEXUS OF STEVENSCREEK ASTS OIL WAS EMPTY. CUST STS DLR CAME TO OFFICE &REFILL OIL & CUST WAS GIVEN LOANER VEH. AN ESS00. CUST STS INSIGHT EXPERIENCE SAME ISSUE W/ LOANER VEH. CUST STS LOANER VEH DOESN'T LUNG FORWARD WHEN BRAKING. CUST STS THIS CONCERN HAS CUST EXPERIENCED FOR 3 MO. CUST STS VERY FRUSTRATED. BEEN WAITING. CUST IS CONCERN IF IT IS ONLY W/ HIS VEH. CUST STS WANTS ISSUE TO BE FIXED OR REPL HIS VEH. CUST STS SPOKE W/ JERRY LUCAS & WAS TOLD LEXUS IS WO

Additional Summary:

Toyota ID No: 20021219363
NHTSA ODI No:
Date of Incident: 20021200
Vehicle: 2003 TOYOTA, LEXUS CAMRY, CAMRY SOLARA, ES300
Location of Incident: FAYETTEVILLE, NC

NHTSA Summary:
*** PHONE LOG 12/18/2002 10:02:57 AM DOBINSON SHERRY, DLR. CALLED IN TO DOCUMENT CONCERN OF CUST. DLR ADVD THE CUST STD HAD UNINTENDED ACCELERATION WHICH CAUSED VEH TO RUN INTO CURB RESULTING IN FRONT END DAMAGE. DI & STD THAT NO VIN# IS AVAIL. AND ADVD IS ONLY REPORTING INFO TO BE DOCUMENTED PER PROCEDURE. DLR THAT CUST MAY WANT VEH BOUGHT BACK AND WOULD CONTACT AREA IF NEED BE. *** CASE CLOSE 12/18/2002 10:03:14 AM JOHNSON I ADVD WOULD DOC CASE AS REQUESTED. DLR DECLINED FURTHER ASSISTANCE AND ADVD THEY WOULD CONTACT AREA IF NEED TO FOR CUST'S POSSIBLE BUY BACK REQST.
Additional Summary:

Toyota ID No:
NHTSA ODI No: 10020125
Date of Incident: 20021101
Vehicle: 2001 TOYOTA AVALON
Location of Incident: GOLETA, CA
NHTSA Summary:
ACCELERATOR PEDAL SOMETIMES REQUIRES EXTRA FORCE TO MOVE CAUSING LURCHING OF VEHICLE. 40K MILES. TOYOTA AVALON XL
Additional Summary:

Toyota ID No:
NHTSA ODI No: 10021101
Date of Incident: 20021208
Vehicle: 2002 TOYOTA HIGHLANDER
Location of Incident: FRESNO, CA
NHTSA Summary:
CONSUMER TRIED TO DISENGAGE THE VEHICLE CRUISE CONTROL, AND WAS UNSUCCESSFUL. VEHICLE CONTINUED TO ACCELERATE AT A HIGH SPEED WHEN CONSUMER ATTEMPTED TO APPLY THE BRAKES. CONSUMER HAD TO TURN THE KEYS IN THE ACCESSORY POSITION, AND ALLOWED THE VEHICLE TO COAST TO A COMPLETE STOP. THE DEALERSHIP HAD BEEN NOTIFIED. PLEASE PROVIDE MORE DETAILS. PH THE DEALERSHIP STATED THE VEHICLE WAS FINE AND THERE HAVE BEEN NO PROBLEMS SINCE.*JB
Additional Summary:

Toyota ID No:
NHTSA ODI No: 10002256
Date of Incident: 20021210
Vehicle: 2002 TOYOTA CAMRY
Location of Incident: POMPANO BEACH, FL
NHTSA Summary:
THE VEHICLE WAS DRIVEN AT A SPEED OF 5 MPH WHEN IT SUDDENLY ACCELERATED. THE CONSUMER ALSO COMPLAINED ABOUT THE PEDAL. THE DEALER WAS CONTACTED AND FOUND NOTHING WRONG. TS NCC
Additional Summary:

Toyota ID No:
NHTSA ODI No: 10001799
Date of Incident: 20021214
Vehicle: 2003 TOYOTA COROLLA

Location of Incident: HELENDALE, CA
NHTSA Summary:
CONSUMER STATED THAT WHEN TRYING TO ACCELERATE THE PEDAL WILL STICK IN THE IDLE POSITION CAUSING A DISTRACTION TO THE CONSUMER. DEALER NOTIFIED. TS
Additional Summary:

Toyota ID No: 200301221625
NHTSA ODI No:
Date of Incident: 20030000
Vehicle: 2002 TOYOTA, LEXUS CAMRY
Location of Incident: PORTLAND, OR
NHTSA Summary:
*** PHONE LOG 01/22/2003 01:31:12 PM SIDENIA
02 CAMRY - STS THAT HAVING CONCERNS W/ CATALYTIC CONVERTER. STS THAY CATALYTIC CONVERTER RELEASES A ROTTEN ODOR THAT GOES INSIDE THE VEH. . STS THAT TOOK TO DLR. STS THAT SPK W/ DAVID BARNER SVC ADV WHO ADV THAT NOTHING THAT COULD BE DONE ON THIS CONCERN. STS THAT SVC ADV EXPL THAT IT WAS THE FUEL ON VEH THAT WAS CAUSING ODOR TO COME TO THE INSIDE THE VEH. STS THAT VEH SURGES PRD WHILE AT STOP . STS DLR LOOKING INTO SURGE CNCRN SICE TO HAVE VEH PERM RPRD FOR ODOR & SURGE.
*** DEALER NOTES: 01/30/03 16:35:37
CUST HAS APPT FOR 1/31/03 2PM TO ROAD TEST WITH TECHNICIAN. DSPM ADVISING NO FIX AVAIL ON "ODOR CONCERNS". WILL CHECK FOR ANY OTHER CAUSES AND CX SURGING PROBLEM.

*** CASE CLOSE 02/04/03 04:32:51 PM DLR36045
COULD NOT DUPL ON ROAD TEST W/CUSTOMER. AGREED W/CUST INTERMITTENT PROBLEM. CUST AGREES TO MONITOR AND NOTE'S WHEN RECURS. ODOR NORMAL CONDITI. CONDITION DUE TO SULFUR IN FUEL. NO FIX AVAIL PER DSPM CUST ADV
Additional Summary:

Toyota ID No: 200302059164
NHTSA ODI No:
Date of Incident: 20020900
Vehicle: 2003 TOYOTA, LEXUS CAMRY
Location of Incident: NAPLES, FL
NHTSA Summary:
*** PHONE LOG 02/05/2003 08:18:15 AM RWRIGHT
02 CAMRY 2K MI:27'S WHEN STEPPING ON BREAK THE RPM'S RACE UP TO APPROX 4K RPM'S AS DRIVING DOWN ROAD AT MPH HEARD SLIGHT RUMBLE AS HE STEPPED ON BRAKE VEH RUMBLE WHEN BRAKE APPLIED@INTERSECTION THEN THE RPMS RACED UP.2ND TIME BRAKE APPLIED PUTTING HIM INTO INTERSECTION CROSS WALK THIS TIME DURING A RED LIGHT.TC DLR NTF TODAY IN PARKING LIGHT SAME THING HAPPENED AGAIN.COULD NOT DUPL.C CCND ON HIS OWN.CNCRND FOR SAFETY BA' ONLY VEH COUPLE HAS WIFE IS AFRAID TO DRIVE VEH.
*** CASE CLOSE 02/10/03 22:41:06 RULEMGR
VEH IN 2/5/03 CAN NOT VERIFY PROBLEM. TEST DROVE EVERYTHING RUNNING NORMAL. CHECK FOR HISTORY AND PERSENT CODE-NO CODE. SYSTEM OPERATING NORMALLY. I SPOKE TO CUST TWICE. AS DID SER MGR, PAUL GOLDSTEIN CUST STILL NOT SATISFIED. BRADD KONERT, DIR OF FIXED OPS CALLED CUST 9:30AM 2/10/03 TO ADV HE BELIEVES CUST IS STEPPING ON GAS & BRAKE AT SAME TIME. CUST ADMITS POSSIBILITY. IF IT HAPPENS AGAIN BRADD WILL DRIVE CUST CAR FOR A FEW DAYS AND PROVIDE LOANER. CUST AGREEABLE TO THIS

Additional Summary:

Toyota ID No: 200304291179; 200399260694
NHTSA ODI No:
Date of Incident: 20030000
Vehicle: 2002 TOYOTA, LEXUS CAMRY
Location of Incident: QUEENS VILLAGE, NY
NHTSA Summary:
*** PHONE LOG 04/29/2003 05:20:57 PM TOSHIBA
02 CAMRY - CUST STS SOMETIMES VEH ACCELERATES BY ITSELF AND SOMETIMES VEH BRAKE PEDAL SINKS TO THE FLOOR. CUST STS ALSO ENG IDLES ROUGH. CUST STS TOOK VEH TO DLR WHO STS COULD NOT FIND ANYTHING WRONG AND ALSO CHARGED CUST FOR DIAGNOSIS. CUST STS SPOKE TO SERVICE ADVISOR AND CRM NOT INVOLVED. CUST STS ALL CONCERNS ARE INTERMITTENT.
*** NOTES 05/01/2003 01:44:05 PM QHOLMES
CUST C/B STS BOUGHT BY FROM CRM WHO ADV CUST CAN NOT START BPR VEH UNTIL COND DOCUMENTED. CUST STS WILL TAKE VEH BACK TO DLR FIVETOWN TOY. NCR APOL & ADV CUST CONC DOC ATTRQ.

*** CASE CLOSE 05/02/03 02:29:38 PM DLR31139
CUSTOMER ADVISED CRM THAT HE IS GOING BACK TO 5 TOWNS TOYOTA WHERE THE VEHICLE WAS BOUGHT FROM AND HAVE DTEM INSPECT THE VEHICLE.
*** PHONE LOG 05/26/2003 12:27:02 PM BRDA
----ARB---- PREV CASE 200304291498
CUST STS SOMETIMES VEH ACCELERATES BY ITSELF AND SOMETIMES VEH BRAKE PEDAL SINKS TO THE FLOOR. CUST STS ALSO ENG IDLES ROUGH. CUST STS THAT THERE IS A NOISE COMING FROM THE POWER STEERING. CUST STS TOOK VEH TO BOTH DLRS WHO STS COULD NOT FIND ANYTHING WRONG AND ALSO CHARGED CUST FOR DIAGNOSIS.
*** NOTES 06/26/2003 09:27:57 AM WSAMUELS
AS REQUESTED, ARB PPWK SENT TO THIS CUST. VIA 1ST CLASS MAIL DATED 9/29/03. ALLOW 7-10 BUS DAYS FOR ARRIVAL OF PPWK.

*** CASE CLOSE 09/29/03 01:23:02 PM NYS
CASE DISPATCHED TO JFESTELLI
*** NOTES 10/20/2003 01:17:37 PM AMOORE
CUST C/B TO ADV PLANS TO SEND LTR AND COPIES OR VEH WORK ORDERS FOR VEH TO NCDS. NCR ADV OKAY WILL DOC TO FILE.
Additional Summary:

Toyota ID No: 200318091021
NHTSA ODI No:
Date of Incident: 20030000
Vehicle: 2000 TOYOTA, LEXUS CAMRY
Location of Incident: CHICAGO, IL
NHTSA Summary:
*** PHONE LOG 10/03/2003 03:47:11 PM TOSHIBA
01 CAMRY - CUST STS WINDOWS WERE SQUEAKING WHEN IT RAINED. CUST STS THE WATER WOULD STAY IN THE DOOR FOR FEW DAYS AFTER THE RAIN . CUST STS DLR WORKED ON WINDOW 2X BUT CONCERNS CONTINUE. CUST STS SPOKE TO MARK AND CRM NOT INVOLVED.
*** NOTES 10/09/2003 03:47:12 PM TOSHIBA

CUST STS WHEN BRAKING, VEH SOMETIMES LUNGES FORWARD. CUST STS GOT INTO AN ACCIDENT B/C OF THIS WHICH COST $650 TO REPAIR.

*** CASE CLOSE 10/22/03 03:55:38 PM DLR13093
MELVIN FIELD TECH, INSP. & TESTDRIVE MS PHILLIPS CAR , COULDNT NOT DUPLICATE CONDITION. CAR DRIVES & BRAKES NORMAL. CAR BRAKES AR DESIGNED

Additional Summary:

Toyota ID No: 200305220767
NHTSA ODI No: 20030000
Date of Incident:
Vehicle: 2002 TOYOTA, LEXUS CAMRY SOLARA
Location of Incident: GLEN COVE, NY
NHTSA Summary:
*** PHONE LOG 05/21/2003 12:56:28 PM SRIVIERA
PA:
02 SOLARA W/78 MI. CUST STS HAS TAKEN VEH TO DLR 4X FOR SAME CONDERN. CUST S78 VEH HAS A CONCERN W/ THE ACCELERATION & THAT WHEN CUST PUTS HIS FOOT ON THE BRAKES, THE VEH SURGES FORWARD. CUST STS VEH HAS BEEN DOING THIS FOR THE FAST COUPLE OF MONTHS. CUST STS TOOK VEH TO DLR JIMMY/REW MGR DIDN'T EVEN LOOK @ THE VEH & STS DLR COULDNT DUPLICATE THE CONCERN WHEN DOING THE RIDE-ALONG.
*** NOTES 05/22/2003 12:58:29 PM SRIVIERA
>>> NOTES CONT. CUST STS THEN TOOK VEH TO AN INDEP MECH WHO TOLD CUST THAT THERE IS SOMETHING WRONG W/ THE VEH COMPUTER WHICH IS CAUSING VEH TO ACCELER ATE WHEN IT SHOULD BE BRAKING. CUST STS VEH HAS BEEN SITTING @ THE DLR & NOTHING HAS BEEN DONE TO IT. CUST STS HE CANNOT GET HIS VEH UNTIL JIMMY/REW MGR IS BACK IN THE OFFICE & THAT NO RENTAL OFFERED. CUST STS IS NOT SATISFIED W/ THE FACT THAT HE PD SO MUCH MONEY FOR A VEH THAT IS DANGEROUS.
*** DEALER NOTES: 05/23/03 05:16:21
HAS NEVER BEEN ABLE TO DUPLICATE. MR SITA HAS BEEN A LONG TIME CUST OF DEALER, DEALER IS JUST AS FRUSTRATED AND WILL DO ANY THING WE POSSIBLY CAN TO HELP RESOLVE ISSUES WITH VEHICLE
*** NOTES 05/23/03 05:26:38 AM NYS
CASE DISPATCHED TO DSPM . J. FESTELLI AND CC STS J.NEIL

*** CASE CLOSE 05/23/03 07:34:09 AM NYS
DSPM SPOKE WITH CUST. INFORMED CUST CONDITION IS NORMAL. CUST VERY CONCERNED. DSPM TO SET UP APPT WITH STS TO INSPECT VEH
Additional Summary:

Toyota ID No: 200301071169
NHTSA ODI No:
Date of Incident: 20020000
Vehicle: 2002 TOYOTA, LEXUS CAMRY, CAMRY SOLARA, ES300
Location of Incident: GARDEN CITY, NY
NHTSA Summary:
*** PHONE LOG 03/07/2003 02:11:07 PM ESTAPLES
---LEMON LAW ---RECEIVED VIA CERTIFIED MAIL 1/2 AT HAMILTON OFFICE. TMS HQ REVD CONSUMER'S LTR 1/7. CST STS CNCRN (10) WITH BRAKES - SQUEAKS - SUSPENSION - NOISE/VIBRATION. DRIVEABILITY - VEH ACCELERATES ON ITS OWN AT HIGH SPEED. MULT REPAIR ATTEMPTS - ISSUES STILL EXIST. CONTACT CUST'S ATTORNEY.

MORGANSTERN & QUATELA
216 OLD COUNTRY ROAD, STE 103
GARDEN CITY, NY 11530
(516) 739-8300 FAX (516) 739-8390
ALLEN E MORGANSTERN, ATTORNEY
*** NOTES 03/06/03 07:28:24 AM NY1
CASE DISPATCHED TO DSPMS D TOWNSEND AND J FISTELLI AND CC H DIVER AND J NEIL

*** CASE CLOSE 01/24/03 04:17:33 AM NY3
DSPM SPK AND TEST DROVE VEH WITH CUST. ADV THAT VEH IS OPERATING TO SPEC. ALL SENSORS AND SYSTEMS OPERATING PROPERLY. CUST IS OK WITH DIAG
Additional Summary:

Toyota ID No: 200304011254
NHTSA ODI No:
Date of Incident: 20030000
Vehicle: 2002 TOYOTA, LEXUS CAMRY, CAMRY SOLARA, ES300
Location of Incident: HENDERSON, NV
NHTSA Summary:
*** PHONE LOG 04/01/2003 05:06:15 PM TORIBA
CUST STS WHEN STOPS VEH, IT RUNS REALLY FAST AND HIGH AND VEH MAKES CLICKING NOISE. CUST STS WHEN BASE OFF BRAKES, EVERYTHING STOPS. CUST STS HAS NOT BEEN TO DLR YET.

*** CASE CLOSE 04/02/03 05:11:49 PM DLR27605
LEFT MESSAGE FOR CUSTOMER TO CALL AND MAKE AN APPOINTMENT AND WE WILL BE OLAE TO ADDRESS HIS CONCERNS. CUSTOMER HAS NEVER BEEN TO THIS DEALERSHIP.
Additional Summary:

Toyota ID No: 200305130606
NHTSA ODI No:
Date of Incident: 20030000
Vehicle: 2002 TOYOTA, LEXUS CAMRY, CAMRY SOLARA, ES300
Location of Incident: LAFAYETTE, IN
NHTSA Summary:
*** PHONE LOG 05/14/2003 10:52:42 AM KMENDOZA
SVC SURVEY ATD THE SVC DEPT TREATED THEM VERY WELL BUT THE ONCRN THEY BROUGHT THE VEH IN FOR WAS NOT RESOLVED. STS THE VEH LUNGES FORWARD WHEN FOOT IS ON THE BRAKE. STS COND IS INTERMITTENT AND THE DLR HAS NOT BEEN ABLE TO DUP. CUST ONCRND AS FLS THAT THE COND COULD CAUSE HER TO HIT A PEDESTRIAN OR VEH WHILE IN FRONT OF THEM. STS THE DLR HAS ASKED CUST TO LEAVE VEH FOR A FEW DAYS BUT CUST RCS LOANER WHILE LEAVES IT. DLR ADV UNAVAIL FOR DIAG ATTEMPTS.
*** NOTES 05/22/2003 01:50:28 PM LESPINOZA
CUST CB STS HAS NOT BEEN CONTACTED BY THE DLR. NCR ADV CUST WILL ISSUE A NO RESPONSE AND ADV DLR TO CONTACT ASAP. *** CREATE NO RESPONSE NOTE 05/22/2003 01:50:51 PM BY LESPINOZA
THIS IS NO RESPONSE MESSAGE #1. PLEASE CALL YOUR CUSTOMER IMMEDIATELY.

*** CASE CLOSE 05/23/03 09:02:03 AM DLR31027
SM CALLED TECH LINE AND TALKED TO STS AND DSM THERE IS NO RECORD OF ANY SAME CONDITION SM CALLED CUST AND DISCUSSED POSS SOLUTION TO DUPLICATING CONDITION CUST AGREED TO POSS BRINGING IN WHEN CONDITION IS OCCURING SM

EXPLAINED WITH OUT CONDITION EVIDENT AND WITH PASSED INSPECTION OF SYSTEM BEING OK NO REPAIRS CAN BE PERFORMED. ADVISED CUST WOULD IN THE MEAN TIME SEEK MORE INFO AND ADVISE IF ANY THING COMES UP
*** NOTES 03/11/2004 07:28:48 AM MSOLORIO
CUST CB SAE FEELS THE CURRENT ISSUE WITH THE ENGINE SURGE APPLIES TO HER VEH AND CUST WOULD LIKE TO KNOW WHAT INFO YOU HAS AT THE MOMENT. NCR ADV CUST WOULD LIKE TO KNOW THE NUMBER TO THE NHTSA 1-800-424-9393.
Additional Summary:

Toyota ID No: 200301101020
NHTSA ODI No:
Date of Incident: 20030000
Vehicle: 2002 TOYOTA, LEXUS CAMRY, CAMRY SOLARA, ES300
Location of Incident: MARIETTA, GA
NHTSA Summary:
*** PHONE LOG 01/10/03 02:21:36 PM DMURPHY PREVIOUS CASE 200211120006. CUST IS CONCERNED WITH THE TRANSMISSION ON HIS VEH STATING THAT THE TRANSMISSION HAS BEEN UNPREDICTABLE WITH A STUTTERING EFFECT TO ACCELERATION. *** PHONE LOG 01/10/03 02:21:52 PM DMURPHY ACTION TYPE: INCOMING CALL CALLED THE CUST AND HE ADVISED THAT HE IS NOT SURE WHAT IT IS THAT HE WOULD LIKE TO TRY AND DO AT THIS POINT BUT HE IS AWARE THAT THERE IS AN UPDATE EXPECTED IN MID 2003 TO REMEDY THE CONCERNS THAT HE HAS DESCRIBED AND HE WILL EVENTALLY TALK TO HIS WIFE ABOUT DETERMINING THAT STALLED AS AN OPTION ANOTHER OPTION THAT HE HAS CONSIDERED IS THE POSSIBILITY OF A 2003 ES 300 OR LS 430 OR BOTH. THE CUST IS GOING TO THINK ABOUT WHAT IT IS THAT HE WOULD LIKE TO DO AND GET BACK TO ME IN REGARD TO HIS DECISION. I ADVISED THE CUST THAT I WILL CALL ON 1/16/03 IF I DO NOT HEAR FROM HIM FIRST. *** SUBCASE 200301101020-1 CREATED 01/10/03 02:21:45 PM DMURPHY *** PHONE LOG 01/13/03 10:36:55 AM DMURPHY ACTION TYPE: OUTGOING CALL RETURNED A CALL TO THE CUST AND LEFT A MESSAGE THAT I WOULD TRY AND CALL HIM AGAIN IN THE AFTERNOON 1/15/03. *** PHONE LOG 01/13/03 02:27:52 PM DMURPHY ACTION TYPE: INCOMING CALL RECEIVED A CALL FROM THE CUST WHO STATED THAT HIS WIFE FEELS INSECURE IN HER VEH AND THAT WHEN THE VEH IS AT A STOP SIGN OR LIGHT IT SEEMS THAT THE VEH LURCHES FORWARD. THE CUST STATES THAT HE WOULD LIKE TO GET INTO A 2003 ES IF POSSIBLE AND NOT WAIT FOR THE UPDATE TO COME IN MID 2003 BECAUSE HE WAS TOLD THE UPDATE WOULD BE AVAILABLE IN LATE 2002 AND IT DID NOT COME. I ADVISED THAT I WOULD LOOK INTO THE REQUEST THAT MR. COMSTOCK HAS MADE AND CALL HIM BACK BY 1/17/03. THE CUST ADVISED THAT HE WILL ALSO BE IN THE MARKET FOR AN LS 430 IN THE NEAR FUTURE AFTER HE HAS TAKEN CARE OF THE CONCERNS THAT HE HAS CURRENTLY. *** PHONE LOG 01/13/03 04:19:06 PM DMURPHY ACTION TYPE: INCOMING CALL RECEIVED A CALL FROM THE CUST WHO ADVISED THAT HE SPOKE TO THE DLR AND THAT THE 2003 VEHS ARE EXHIBITING
Additional Summary:

Toyota ID No: 200303055801
NHTSA ODI No:
Date of Incident: 20030000
Vehicle: 2002 TOYOTA, LEXUS CAMRY, CAMRY SOLARA, ES300
Location of Incident: WHITINSVILLE, MA
NHTSA Summary:
*** PHONE LOG 03/05/2003 11:29:45 PM AUSEMACK
---- JCEB----

CUST STS WAS INVOLVED IN AN ACCIDENT THAT CUST FLS WAS CAUSED BY VEH. CUST STS WAS PULLING INTO A DRIVEWAY AND VEH BEGAN ACCELERATING ON ITS OWN AND CUST THEN HIT A STONE WALL. CUST STS AIRBAGS DID DEPLOY. LEGAL REQUESTS FORWARDED WITH MANY INTERIOR AND EXTERIOR PHOTOS.
*** NOTES 03/06/03 07:29:48 AM BOB2
RCR LM FOR FTS, AD TO RETURN CLL WITH INSPECTION TIME.
*** NOTES 03/06/03 10:13:14 AM BOB3
RCR RECTD CLL FROM STS WHO WAS ON HIS WAY TO BERNARDI. HE WILL INSPECT THE VEH TODAY.
*** NOTES 03/06/03 10:13:27 AM BOB2
RCR WILL CONTACT CUST.
*** NOTES 03/06/03 10:21:51 AM BOB2
RCR CONTACTED CUS WITH AND EXPLAINED THAT ONE OF OUR TECHNICAL EXPERTS WAS GOING OUT TO BERNARDI TODAY TO INVESTIGATE. EXPLAINED THAT HE WILL TAKE PICTURES AND WRITE UP A REPORT AS TO WHAT OCCURRED WITH THIS VEH AND THE ACCIDENT. RCR WILL THEN HAVE 30 DAYS TO RESPOND IN WRITING. CUS WITH DID ASK IF THE CAR WAS DETERMINED TO BE TOTALLED WHAT WOULD HAPPEN NEXT. RCR STATED THAT FROM A MANUFACTURER'S STANDPOINT WE WOULD NOT KNOW UNTIL THE REPORT COMES IN AND A...
*** NOTES 03/06/03 10:33:54 AM BOB2
.....DETERMINATION IS MADE. RCR DID SAY THAT THE CUST WAS FREE TO DO WITH THE CAR WHAT SHE PLEASED. SHE DID WANT TO MAKE A NOTE THAT WHEN SHE PURCHASED THE VEH AT BERNARDI THEY WERE VERY PROFESSIONAL BUT AFTER ACCIDENT VERY INCONSIDERATE WHEN IT CAME TO THEIR DEALINGS WE CUST. THEY IMMEDIATELY REFERRED TO NATIONAL CUSTOMER RELATIONS.

*** CASE CLOSE 03/20/03 06:04:35 AM BOB2
RCR RECTD REPORT FROM FTS, AD. WILL CONTACT CUST VIA LETTER STATING THE OUTCOME OF THE CASE-NO MANUFACTURING DEFECT CAUSED THE ACCIDENT.
Additional Summary:

Toyota ID No: 200312170492
NHTSA ODI No:
Date of Incident: 20030000
Vehicle: 2003 TOYOTA, LEXUS CAMRY, CAMRY SOLARA, ES300
Location of Incident: MEOLA, NY
NHTSA Summary:
*** PHONE LOG 12/17/2003 10:17:51 AM KWOODS
LTR: CUST STS WOULD LIKE TO MAKE SUGGESTIONS FOR PRODUCT FLS STEERING SHOULD HAVE BEEN TELESCOPIC OR FURTHER INTO CABIN. FRONT SEAT SHORT DOES NOT PROVIDE ADEQUATE SUPPORT FLS ARM REST SHOULD BE FORWARD TO BE CLOSER TO STEERING WHEEL. FLS EACH DOOR SHOULD HAVE A LIGHT SO ON COMING DRIVERS CAN SEE DOOR IS OPEN. CUST ALSO STS RISK WHEN SHIFT FROM PARK TO DRIVE AND ENGINE SURGE WHEN STOPPED AT LIGHT OR STOP SIGN. STS WILL BE GOING TO DLR SKS TO KNOW IF TOYOTA WILL >>>>
*** NOTES 12/17/2003 10:18:27 AM KWOODS
<<<PROVIDE LOANER IF VEH KEPT FOR EXTENDED PERIOD OF TIME.

*** CASE CLOSE 12/17/2003 10:21:51 AM KWOODS
NCR CB CUST LM ADVISING LTR RECEIVED ADV CUST MAY CB CAC NEXT REF. IF CUST CB PLEASE ADV SUGGESTIONS HAVE BEEN DOCD, PROBED IF DLR HAS YET TO ADDRESS VEH CONCERNS ADV IF WARR RPR 8- HRS WARR PROVIDES TRANSPORT ASSISTANCE IF DLR HASN'T RPRD VEH MAY PRODE DLR NAME AND OPEN IF NECESSARY

Additional Summary:

Toyota ID No: 200304135266
NHTSA ODI No:
Date of Incident: 20030000
Vehicle: 2003 TOYOTA, LEXUS CAMRY, CAMRY SOLARA, ES300
Location of Incident: MIAMI, FL
NHTSA Summary:
*** PHONE LOG 04/13/2003 06:06:09 PM JOHNSION DISPATCH 630/03 ROVD: CUST STD SEEMS LIKE ACCELERATOR PEDAL STICKS. CUST STD HAS TO PUSH DOWN HARD TO GET VEH TO GO. CUST STD WHEN STOPPED AT RED LIGHT, VEH MOVES BY ITSELF AS IF STRUCK FROM BEHIND. CUST STD WHEN MERGING INTO TRAFFIC, VEH DOES NOT SEEM TO HAVE ENOUGH POWER TO PICK UP SPEED. CUST STD SVC REF STD OTHER PEOPLE HAVE COMPLAINED, NOTHING CAN BE DONE, & MORE EXPENSIVE MODELS HAVE SAME CONCERN. CUST STD WAS SHOCKED RE INFO. CUST STD IS SAFETY CONCERN. *** COMMT 06/13/2003 06:03:28 PM JOHNSION ACTION TYPE: CUSTOMER *** NOTES 06/16/2003 05:34:23 PM JOHNSION TO: FATTY RODRIGUEZ, CSM FROM: JOSEPH JOHNSION, LCS TEL# 216-408-2590 RE FATTY: CAN YOU PLEASE ADV IF CUST'S VEH IS OPERATING AS DESIGNED OR IF ADDTL INSPECTIONS ARE REQUIRED TO DIAGNOSE CUST'S CONCERNS REGARDING "STICKING" GAS PEDAL. VEH MOVES FORWARD AUTOMATICALLY, AND HESITATION WHEN CHANGING LANES. IF FURTHER INSPECTION IS NEEDED, PLEASE PROVIDE DLR NOTES (NOT CLOSE NOTES) ADVISING DATE OF INSPECTION. THANKS, JOSEPH *** SUBCASE 200304135266-1 CREATED 06/16/2003 05:35:39 PM JOHNSION *** CREATE NO RESPONSE NOTE 06/16/2003 05:38:21 PM BY JOHNSION THIS IS NO RESPONSE MESSAGE #1. PLEASE CALL YOUR CUSTOMER IMMEDIATELY. *** CREATE NO RESPONSE NOTE 06/23/2003 03:39:54 PM BY JOHNSION THIS IS NO RESPONSE MESSAGE #2. PLEASE CALL YOUR CUSTOMER IMMEDIATELY. *** PHONE LOG 07/10/2003 10:04:30 AM JOHNSION ACTION TYPE: OUTGOING CALL CALLED CUST, NOT AVAIL. LEFT MSG TO CALL ME BACK TO POSSIBLY DISCUSS LEXUS' POSITION REGARDING VEH HESTATION. IF CUST CALLS, PLEASE ASK IF SHE WOULD LIKE FOR LEXUS TO SEND HER DOCUMENTATION REGARDING OTHR LEXUS ENGINEERS WORKING TOWARD VEH RESPONSE IMPROVEMENTS. IF CUST AGREES, PLEASE CONFIRM ADDRESS AND ADV SHE I WOULD BE HAPPY TO SEND DOCUMENTATION. THANKS. *** EMAIL OUT 07/10/2003 05:09:06 PM MSPANN1 ACTION TYPE: EXTERNAL EMAIL SENT TO: [JOSEPH_JOHNSION@TOYOTA.COM] CC LIST: [NOBODY] CUST RETURNED CALL FOR JOHNSION. ADV CB
Additional Summary:

Toyota ID No: 200304095222
NHTSA ODI No:
Date of Incident: 20030000
Vehicle: 2003 TOYOTA, LEXUS CAMRY, CAMRY SOLARA, ES300
Location of Incident: MIAMI, FL
NHTSA Summary:
*** PHONE LOG 04/04/03 02:20:45 AM JBURR CUST HAS CONCERNS WHIS VEH LUNGING FORWARD WHEN HE IS STOPPED. CUST ALSO UNHAPPY ABOUT HIS WINDSHIELD THAT IT IS DISTORTED. CUST WANTED TO KNOW WHO TO CONTACT & WHERE. *** CASE CLOSE 04/05/03 08:26:47 AM JBURR
Additional Summary:

Toyota ID No: 200311050522
NHTSA ODI No:
Date of Incident: 20030000

Vehicle: 2003 TOYOTA, LEXUS CAMRY, CAMRY SOLARA, ES300
Location of Incident: BAYSHORE, NY
NHTSA Summary:
*** PHONE LOG 11/03/2003 09:27:27 AM STEVENS CUST STS THAT HE HAS HAD A PROBLEM WITH ENGINE RACING WHEN VEH IS STOPPED AND HE IS PRESSING ON BRAKE. CUST STS THAT DLR DIAGNOSED ISSUE AS THE MAT UNDER GAS PEDAL INTERFERING WITH GAS PEDAL. CUST STS THAT HE TOOK OUT MAT AND PROBLEM CONTINUES. CUST STS THAT HE WAS TOLD TO CONTACT UCS TO SCHEDULE APPT W DOM. *** NOTES 11/03/2003 09:28:55 AM STEVENS TO: WILLIAM FISHLIVER, CSM FR: JOLE STEVENS, 516-448-5242 COULD YOU PLS ADV W THERE IS MORE PERTINENT INFO W CUSTS STT DO WE NEED TO SCHEDULE APPT WITH DOM? WHEN WILL DOM BE AT YOUR DLR NEXT? PLS ADV. *** SUBCASE 20031103093221-1 CREATED 11/03/2003 09:31:51 AM STEVENS *** NOTES 11/04/2003 10:02:56 AM STEVENS SHEILA IS INV WRITER. *** NOTES 11/04/2003 10:06:06 AM STEVENS SHEILA STS THAT SHE IS AVAILABLE ON THE 17TH AND THAT CUST CAN DROP OFF THE VEH AND COME PICK UP A LOANER. *** NOTES 11/05/2003 10:17:08 AM STEVENS CUST STS THAT THIS IS THE THIRD TIME VEH HAS BEEN IN FOR 1. RADIO, 2. SHELL, 3. RACING ENGINE. CUST STS THAT VEH WILL GO IN TOMORROW. CUST WAS TOLD THAT ANDREW JONES, RM WILL BE IN TOMORROW. I TOLD CUST WE WOULD MONITOR SIT AND FU WHEN MORE INFO WAS AVAILABLE. *** NOTES 11/07/2003 11:03:41 AM STEVENS SHEILA FROM DLR CALLED AND STS THAT VEH HAS ARRIVED. IT IS THE THIRD TIME THAT VEH HAS BEEN IN DLR WILL DIAGNOSE THE VEH AND ADV OF SIT. IF NOTHING IS DIAGNOSED, WE WILL TALK WITH DOM. *** PHONE LOG 11/11/2003 02:18:08 PM STEVENS ACTION TYPE: INCOMING CALL CUST STS THAT HE RECIEVED CALL FROM SHEILA TELLING HIM TO COME PICK UP THE VEH. CUST WAS TOLD EARLIER IN THE DAY THAT DOM WOULD BE COMING BY ANDREW JONES. CUST DOESN'T KNOW WHAT TO DO BUT DOES NOT WANT TO PICK UP VEH UNTIL VEH WORKS PROPERLY. CUST RQSTS THAT I CALL DLR TOMORROW MORNING AND INFORM HIM OF PROGRESS AND WHAT SHOULD BE DONE. *** PHONE LOG 11/12/2003 09:15:17 AM STEVENS ACTION TYPE: OUTGOING CALL CUST EXPRESSED EXTREME DISATS WITH VEH AND SVC RECIEVED. CUST WILL
Additional Summary:

Toyota ID No: 2003060409829
NHTSA ODI No:
Date of Incident: 20010000
Vehicle: 2003 TOYOTA, LEXUS CAMRY, CAMRY SOLARA, ES300
Location of Incident: BUCKHANNON, WV
NHTSA Summary:
*** PHONE LOG 04/04/2003 01:50:24 PM SPENCER
---CUSTS---
CUST'S HUSBAND BARRY, STS WIFE WAS STOPPED IN PARKING LOT & LIFTED OFF BRAKE & GAS PEDAL WAS STUCK & VEH FLEW FORWARD & CRASHED INTO A VAN. STS AFTER CRASH ENGINE WAS STILL REVVING. CUST STS WILL HAVE WIFE C/B B/C HE DOESN'T HAVE ALL INFO RELATING TO ACCIDENT.
LEGAL REQUESTS FURTHER WITH MANY INTERIOR AND EXTERIOR PHOTOS
*** NOTES 04/04/2003 02:36:43 PM ABUNKLEY
CUST'S ACCOUNT OF INCIDENT: CUST STS HOTEL HAD CANAPOY NEAR ENTRANCE, GAS PEDAL BECAME INOPERATIVE CAUSING VEH TO RACE FORWARD. CUST STS VEH HIT BACK OF PARKED VAN. VEH WENT UNDER BUMP OF VAN. CUST STS WAS ABLE TO PUT VEH IN REVERSE, BUT ENGINE STAYED REVVED UP.
*** NOTES 04/07/03 09:12:08 AM CINS
SPK W CUSTOMER. VEHICLE IS LOCATED @ ATLAS BODY SHOP ON MARKET STREET IN AKRON OHIO (330-784-5190). I CALLED BODY SHOP SPOKE WITH JOE, STATES "COME IN OUT AND INSPECT". I ADV CUST WE CAN ONLY DO INSPECTION IF VEHICLE HAS NOT BEEN REPAIRED AND ALLOW 30 DAYS FOR INSPECTION, IF NEEDED - SAID OK.

*** NOTES 04/07/03 10:17:00 AM CINS
EMAILED CASE TO M. CLEMENS, DHPM.
*** NOTES 04/07/2003 03:13:39 PM AUGERMACK
CUST C/B AND ADV CANNOT WAIT 30 DAYS FOR AN INSPECTION. NCR APOL AND ADV THAT 30 DAYS IS THE TIME WINDOW FOR THE INSPECTION AND IF CUST CANNOT WAIT FOR THAT TIME THEN CUST MAY HAVE VEH REPAIRED AND FORWARD THE INSPECTION AND THEN SUBMIT ALL CONCERNS IN WRITING TO TMS LEGAL FOR FURTHER CONSIDERATION. CUST ADV RES A C/B FROM CN REGRN BD MORE SPECIFIC INSPECTION. CUST REQUESTED SUPERVISOR. NCR APOL AND ADV WILL HAVE TL C/B IN 24 HRS. NCR CONFIRMED PHONE #.
*** NOTES 04/07/03 03:7:48 PM SGARDINER
NCR TOOK CALL AS A SUPERVISOR. CUS ERS TO GET A TIME FRAME OF WHEN VEH WILL BE LOOKED AT.STS WIFE WAS ADV UP TO 30 DAYS.PLS THIS IS NOT ACCEPTABLE.NCR ADV WILL PASS CONCERN TO REGIONAL OFFICE.NCR WILL CONTACT REGIONAL OFFICE TOMORROW AFTER DISCUSSING CASE W/APPROPRIATE ANALYST.
*** NOTES 04/08/03 05:26:46 AM CINS
LEFT VM MSG FOR M. CLEMENS, DHPM TO CALL IN R.
Additional Summary:

Toyota ID No:
NHTSA ODI No: 10293547
Date of Incident: 20030101
Vehicle: 2000 TOYOTA CAMRY
Location of Incident: FAIRFAX, VA
NHTSA Summary:
I OWNED A 2000 TOYOTA CAMRY V6 WHICH I TRADED FOR A NEW 06 CAMRY 4 CYLINDER. WHEN THE RECALL WAS ANNOUNCED YESTERDAY ABOUT THE AUTOMATIC ACCELERATION PROBLEM I REMEMBERED THAT TOO MAD TWO INCIDENTS WITH MY 2000 CAMRY WHERE IT AUTOMATICALLY ACCELERATED. IT SCARED ME AT THE TIME AND I REPORTED IT TO THE DEALER, BUT THEY COULD NOT FIND A PROBLEM WITH THE CAR. *TR
Additional Summary:

Toyota ID No:
NHTSA ODI No: 10006685
Date of Incident: 20030101
Vehicle: 2002 TOYOTA CAMRY
Location of Incident: LINWOOD, NJ
NHTSA Summary:
WHILE TRYING TO APPLY BRAKES AT A SLOW SPEED, THE PEDAL GOES TO THE FLOOR AND VEHICLE PROCEEDED AND CAUSED THE VEHICLE TO SLAM INTO BENCHES. THE DEALER REPRESENTATIVE TESTED THE VEHICLE AT HIGH SPEEDS, IN WHICH NO PROBLEM WAS FOUND. PH NCC
Additional Summary:

Toyota ID No:
NHTSA ODI No: 10002412
Date of Incident: 20030104
Vehicle: 2001 TOYOTA ECHO
Location of Incident: HALSAM LAKE, WI
NHTSA Summary:

WHILE DRIVING AT ANY SPEED AND WITHOUT WARNING THE VEHICLE WILL ACCELERATED AND IT BECOMES DIFFICULT FOR THE CONSUMER TO GET THE VEHICLE TO DECELERATE RESULTING IN VEHICLE DAMAGE. THE DEALER HAS BEEN NOTIFIED. *SG,M
Additional Summary:

Toyota ID No: 10002370
NHTSA ODI No: 20030105
Vehicle: 2002 TOYOTA RAV4
Location of Incident: CHICAGO, IL
NHTSA Summary:
VEHICLE ACCELERATES ON ITS OWN WITHOUT PRESSING ACCELERATER. VEHICLE WAS INVOLVED IN TWO COLLISIONS BECAUSE OF THIS PROBLEM. PLEASE PROVIDE ANY FURTHER INFORMATION. *BL, *AK
Additional Summary:

Toyota ID No: 2003010100793
NHTSA ODI No:
Date of Incident: 20010107
Vehicle: 2002 TOYOTA, LEXUS CAMRY
Location of Incident: BALTIMORE, MD
NHTSA Summary:
*** PHONE LOG 01/10/2003 12:47:36 PM JMUELLER
DLR PRODUCT INSPECTIONCUST STS 02 CAMRY WAS IN AN ACCIDENT 1-7-03. CUST STS WAS HITTING IN DRIVE THROUGH AND ALL OF A SUDDEN VEH LUNGED FORWARD. CUST STS FOOT BRAKE PEDAL WAS NOT WORKING AT ALL. CUST STS HAD TO PULL THE EMERGENCY BRAKE TO STOP THE VEH. CUST STS HAS NO CLUE WHAT CAUSED THIS TO HAPPEN. DLR PRODUCT INSPECTION CONTACT REGION IF NECESSARY.
*** CASE CLOSE 01/10/03 07:17:53 AM DLR10027
CUST. INFORMED THAT CAR IS AT RAIL AND WE WILL HAVE TECH CHECK CAR, AND HAVE CHUCK SWEENEY DROP FORM ON CHUCK OUT CAR AND BRKES ALSO, & LET CU & LET CUST NO RESLTS PL CL. CUST. UNDERSTANDS
Additional Summary:

Toyota ID No:
NHTSA ODI No: 10006754
Date of Incident: 20020114
Vehicle: 2002 TOYOTA CAMRY
Location of Incident: BRONX, NY
NHTSA Summary:
THE CONSUMER EXPERIENCED SUDDEN ACCELERATION WITH THIS VEHICLE AND A NEWLY PURCHASED 2003 CAMRY. *JB, SCC
Additional Summary:

Toyota ID No:
NHTSA ODI No: 10002929
Date of Incident: 20030115
Vehicle: 2002 GOLF TOYOTA CAMRY
Location of Incident: FOREST HILLS, NY
NHTSA Summary:

CONSUMER CALLED COMPLAINING WHILE DRIVING THE VEHICLE AT LOW SPEED WHEN SUFFER A SUDDEN ACCELERATION CAUSING A DAMAGE TO THE VEHICLE. DEALER HAS BEEN NOTIFIED. PLEASE PROVIDE FURTHER INFORMATION. TS
Additional Summary:

Toyota ID No:
NHTSA ODI No: 10002800
Date of Incident: 20020113
Vehicle: 2001 LEXUS RX300
Location of Incident: QUINCY, MA
NHTSA Summary:
2001 LEXUS RX300, 30DEGREE OUTSIDE TEMP, VEHICLE WARMED UP UNTIL HEATED SEATS WORKED, DROVE VEHICLE ABOUT 80 YARDS FORWARD. VEHICLE PUT INTO REVERSE. SUDDEN ACCELERATION OCCURRED AT FULL THROTTLE. BRAKES DID NOT FUNCTION. UNABLE TO SHIFT INTO DRIVE POSITION WITH VEHICLE IN MOTION. RPM NEEDLE AT REDLINE 6000RPM. VEHICLE FINALLY BROUGHT TO SCREECHING AND SMAKING STOP WHEN SHIFTED INTO PARK. ENGINE WAS SHUT OFF, WHEN STARTED AGAIN, RMP NEEDLE JUMPED UP TO REDLINE AGAIN AND STAYED THERE. THIS REPEATED ABOUT 5 TIMES. ACCELERATION WAS STUCK AT FULL THROTTLE. NO COLLISION. VEHICLE MALFUNCTION REPORTED TO DEALERSHIP, VEHICLE TOWED FOR EXAMINATION AND REPAIRS. NOTICED TICKING SOUND COMING FROM DRIVERS SIDE.
Additional Summary:

Toyota ID No:
NHTSA ODI No: 10242796
Date of Incident: 20030110
Vehicle: 2003 TOYOTA CAMRY
Location of Incident: ATLANTA, GA
NHTSA Summary:
FOLLOWUP TO ODI #10236128. INFORMED BY TOYOTA REP THAT YOUR AGENCY PERFORMED TWO INVESTIGATIONS F THE 2003 CAMRY RESPECTING ACCELERATION SURGES BUT RETURNED NO FINDINGS OF VEHICLE FAILURE. YOUR WEBSITE RECOUNTS ABOUT 100 REPORTS OF SUCH 2003 CAMRY FAILURES MOSTLY (102) UNDER VEHICLE SPEED CONTROL. SOME UNDER POWER TRAIN AUTO TRANS & VAC ACCELERATOR PEDAL. FOR FORD TAURUS I COUNTED 12, HONDA ACCORD AND CHEVROLET MALIBU 20+. ALL FOR MODEL YEAR 2003. AR % OF CASE SOLD QUITE SMALL EVEN FOR CAMRY BUT AN OUTRAGEOUS RATIO OF 6-1 OR 10-1 VS. THE OTHER MODELS QUITE IMPRESSIVE. THE FACT YOU CONDUCTED TWO INVESTIGATIONS OF CAMRY IS TELLING IN AND OF itself. HOW MANY ACCELERATOR INVESTIGATIONS DID YOU CONDUCT FOR THE 2003 TAURUS, ACCORD & MALIBU? ABSENT AN AIRPLANE LIKE RECORDER. HOW CAN YOU BE ASSURED THAT THERE WAS NO VEHICULAR FAILURE? THE ALTERNATIVE IS TO IMPLY THAT CAMRY OPERATORS ARE LESS COMPETENT THAN DRIVERS OF OTHER MAKES... *TR, HARVEY MILLER
Additional Summary:

Toyota ID No:
NHTSA ODI No: 10003476
Date of Incident: 20030125
Vehicle: 2003 TOYOTA CAMRY
Location of Incident: SAN DIEGO, CA
NHTSA Summary:

I HAD BACKED OUT OF PARKING SPACE. WHEN I PUT 2002 TOYOTA CAMRY IN DRIVE, IT SURGED FORWARD. I BRAKED BUT THE VEHICLE ACCELERATED. I DEPRESSED BRAKE FULLY, NONETHELESS THE CAR ACCELERATED UNCONTROLLABLY AND VERY QUICKLY. VEHICLE ONLY STOPPED BY VIOLENT COLLISION WITH TWO PARKED VEHICLES AND CEMENT BLOCKS. ONLY GOOD FORTUNE PREVENTED DEATHS OF ANY BYSTANDERS BY WITNESSES OBSERVED MY FOOT FULLY ON THE DEPRESSED BRAKE PEDAL AS THE CAR WAS AT REST AFTER THE ACCIDENT.
Additional Summary:

Toyota ID No: 20030207082
NHTSA ODI No:
Date of Incident: 20030200
Vehicle: 2002 TOYOTA, LEXUS CAMRY, CAMRY SOLARA, ES300
Location of Incident: DALAND, FL
NHTSA Summary:
*** PHONE LOG 02/07/2003 09:10:46 AM CHALL CUST STS WIFE HAD FOOT ON BRAKE WHILE PARKING AND VEH SPED UP OVER THE CURB AND INTO A BUILDING. CUST STS BUMPER WAS DAMAGED. CUST STS HIS INSURANCE IS COVERING IT. CUST STS INTERNET ADV THIS HAS OCCURRED TO OTHER OWNERS. HE ADV IT WAS ON THE NHTSA WEBSITE. CUST EXPRT INSURANCE WILL GO UP AND HAS TO BUY ANOTHER LEXUS DUE WIFE DOES NOT HAVE CONFIDENCE. THE DIFFERENCE HE HAS TO PAY IS $11,200. *** NOTES 02/07/2003 09:14:00 AM CHALL TO: ALLEN SANDBERG FROM: CHRIS HALL 310-468-2648 CUST STS THAT HIS VEH SUDDENLY ACCELERATED WHILE HIS WIFE WAS PARKING AND HER FOOT WAS ON THE BRAKE. CUST STS THAT HE FOUND INFO ON THE INTERNET THAT OTHER OWNERS HAVE NOT THIS. CUST WANTS TO KNOW WHY THIS OCCURRED AND ASAT SUPERCH OF FX OR ASST WARNC OF NEW VEH. PLEASE REVIEW AND FU. THANKS, CHRIS *** SUBCASE 20030207082-1 CREATED 02/07/2003 09:18:21 AM CHALL *** PHONE LOG 02/11/2003 07:52:39 AM CHALL ACTION TYPE: INCOMING CALL CLLD SM ALLEN SANDBERG AND HE ADV ME THAT HE WAS NOT AWARE OF THIS AND TO CONTACT DOM FOR INSPECTION. *** PHONE LOG 02/11/2003 08:01:24 AM CHALL ACTION TYPE: OUTGOING CALL CLLD DOM LINDEY DUVALL AND SME ADV WE NEED TO ARRANGE FOR A PIR. *** PHONE LOG 02/11/2003 08:05:15 AM CHALL ACTION TYPE: OUTGOING CALL CLLD CUST AND LEFT MSG FOR CB. ** PLEASE ADV CUST THAT I CONTACTED THE SM ALLEN SANDBERG AND HE HAD NOT RCVD ANY DOC FROM THE OWNER AND I WANTED TO GET THE LOCATION OF THE VEH SO WE CAN CONDUCT A PIR AND SEE IF ANY WORK HAS BEEN DONE TO VEH AT THIS POINT. *** EMAIL 00/ 02/11/2003 02:53:52 PM JBROCATO ACTION TYPE: EXTERNAL EMAIL SEND TO: [CHRIS_HALL@TOYOTA.COM] CC LIST: [NOBODY] CUST RETURNED YOUR CALL. HE SAID THAT LEXUS OF ORLANDO TOOK THIS VEH BACK AND CUST IS IN ANOTHER VEH. CUST STS IT CUST THINK ABOUT SAK AND CUST FEELS THAT DUE TO THE CIRCUMSTANCES LCS SHOULD ASSMT W/ THAT AMOUNT OF LOSS. HE PASSED IN THE INFO TO SHARIFF AT THE DLR AND STS THAT HE WILL FAX THE INFO TO REPS DIRECT FAX #. VEH
Additional Summary:

Toyota ID No:
NHTSA ODI No: 10071784
Date of Incident: 20030201
Vehicle: 2003 LEXUS ES300
Location of Incident: HOUSTON, TX
NHTSA Summary:
I TK FM SHETT WOODY (TX) RE DANGEROUS DEFECTIVE TRANSMISSION SOFTWARE PROBLEMS IN THE 2003-2003 LEXUS ES300. REPLY ATTN JAN CROW/ HOUSTON OFC. *PH CONSUMER WOULD APPLY MORE AND MORE PRESSURE TO THE BRAKE PEDAL BUT

VEHICLE WOULDN'T ACCELERATED. *PH THE TRANSMISSION FAILED TWICE. LEXUS HAD GIVEN THE CONSUMER A NEW VEHICLE AND IT HAD SIMILAR PROBLEMS. THE VEHICLE ALMOST HAD GOTTEN THE CONSUMER INTO SEVERAL ACCIDENTS. ON NUMEROUS OCCASIONS AFTER THE BRAKE PEDAL WAS TAPPED, THE VEHICLE WOULD ACCELERATE BUT THE RPMS WOULD FLY UP AND THE VEHICLE WOULD BARELY MOVE. IN STOP IN GO TRAFFIC THE VEHICLE WOULD SURGE FORWARD. (THIS FELT AS IF THE TRANSMISSION SLIPPED THEN THE SURGING OCCURRED). THERE WAS AN ANNOYING RATTLE IN THE CEILING CONSOLE. *SC
Additional Summary:

Toyota ID No:
NHTSA ODI No: 10008347
Date of Incident: 20039208
Vehicle: 2002 TOYOTA CAMRY
Location of Incident: TOPEKA, KS
NHTSA Summary:
THE THROTTLE STICKS NEVER HAD IT HAPPEN AT HIGHWAY SPEEDS YET. LIKE WHEN YOU PULL UP TO A LIGHT TO STOP IT STICKS BUT IF YOU HOLD ON TO THE BRAKE IT GOES DOWN TO SIGNAL. SINCE I'VE OWNED THE CAR IT HAS HAPPENED 3 TIMES. THE LAST TIME AS I WAS PULLING INTO THE DRIVE, HARD TO LAY YOUR HANDS ON TO WHAT TO DO. *SHM
Additional Summary:

Toyota ID No:
NHTSA ODI No: 10028347
Date of Incident: 20030316
Vehicle: 2003 TOYOTA CAMRY
Location of Incident: CHESAPEAKE, VA
NHTSA Summary:
2003 TOYOTA CAMRY 3.0L V6 (MID YEAR 210HP MOTOR) THE VEHICLE DID NOT ACCELERATE THE WAY IT WAS DESIGNED. THE TOYOTA REPRESENTATIVE STATED IT WAS NORMAL. THE CONSUMER BELIEVED IT WAS DANGEROUS WHEN THE ACCELERATOR PEDAL WAS PRESSED, BECAUSE SOMETIMES THE VEHICLE DID NOT MOVE IMMEDIATELY. WHEN THE PEDAL ACCELERATOR PEDAL WAS PUSHED FURTHER TOWARD THE FLOOR, THE VEHICLE BOLTED OUT INTO TRAFFIC WITH A RUSH OF POWER. THE TOYOTA REPRESENTATIVE STATED THAT WAS HOW THE CAR WAS ENGINEERED, AND HE COULD NOT DO ANYTHING ABOUT IT. THE LEAD MECHANIC SAID THE CONSUMER NEEDED TO GET USED TO IT. IT HAD BEEN 5 MONTHS SINCE THE CONSUMER PURCHASED THE VEHICLE. *AK *PS *JH
Additional Summary:

Toyota ID No:
NHTSA ODI No: 10095299
Date of Incident: 20030220
Vehicle: 2003 TOYOTA SEQUOIA
Location of Incident: NORTHAMPTON, PA
NHTSA Summary:
WHILE DRIVING AT ANY SPEED CONSUMER HEARD A LOUD NOISE COMING FROM THE FRONT OF THE VEHICLE. CONSUMER APPLIED THE ACCELERATOR PEDAL AND THE VEHICLE FAILED TO ACCELERATE. THEN, CONSUMER AGAIN APPLIED THE ACCELERATOR PEDAL NUMEROUS TIMES AND THE VEHICLE ACCELERATED UNCONTROLLABLY. HE WAS ABLE TO MAINTAIN CONTROL OF THE VEHICLE AND

DROVE IT TO THE DEALER FOR INSPECTION. MECHANIC COULD NOT DUPLICATE THE PROBLEM. *AK
Additional Summary:

Toyota ID No:
NHTSA ODI No: 10010184
Date of Incident: 20030226
Vehicle: 2002 TOYOTA TACOMA
Location of Incident: ALBANY, NY
NHTSA Summary:
ON THREE SEPARATE OCCASIONS OVER A WEEKS TIME SPAN WHILE DRIVING MY TRUCK IT HAS ACCELERATED BY itself WHEN I HAVE TAKEN MY FOOT OFF THE GAS PEDAL. THE TRUCK CONTINUED TO GO FASTER AND WAS HARD TO SLOW DOWN AND STOP. I BROUGHT THE TRUCK TO A TOYOTA DEALER AND WAS TOLD IF THEY COULD GET THE VEHICLE TO DO THIS THEY COULD FIX IT. THEY KEPT THE TRUCK FOR A DAY AND DROVE IT BUT THE TRUCK RAN NORMAL. THEY SAID IT RAN FINE AND TOLD ME TO COME AND PICK IT UP. *SLM
Additional Summary:

Toyota ID No: 20030112049
NHTSA ODI No:
Date of Incident: 20030100
Vehicle: 2002 TOYOTA, LEXUS CAMRY, CAMRY SOLARA, ES300
Location of Incident: SHREVEPORT, LA
NHTSA Summary:
*** PHONE LOG 02/22/2003 09:57:09 AM AHEYDON
----PCEP----
CUST STS WHEN SHE STEPS ON BRAKE VEH ACCELERATES. CUST STS SHE WAS BACKING OUT OF DRIVEWAY. CUST STS SHE HAD TO ANGLE AROUND NEIGHBOR'S TRUCK. CUST STS SHE STEPPED ON BRAKES WHEN BACKING OUT AND VEH ACCELERATED, VEH HIT FENCE SINCE STEERING ANGLED TO GO AROUND TRUCK. CUST STS THIS ALSO HAPPENED NOVEMBER 8TH.
*** NOTES 03/12/2003 08:57:09 AM AHEYDON
CUST ALSO HAS PREVIOUS ABS CASE 020031112019.
LEGAL REQUESTS FOWZ WITH MANY INTERIOR AND EXTERIOR PHOTOS
*** NOTES 03/12/03 01:44:23 PM EGALENO
CUST CB REITTERATING NCR ADVL ADVISD CASE DISPATCHED AS FCEP. NCR INCORPORATED TO ALLOW DISS FOR CONTACT FROM REG. CUST UNDERSTOOD. NCR CONFIRMED CUST PHB INFO.
*** NOTES 03/17/2003 01:05:15 PM BERNANDEZ
CUST CB STS HAS NOT BEEN CONTACTED BY REGION YET. NCR APOLG, ADV REGION HAS UNTIL EOB TODAY FOR FU. HOWEVER LM WCATWV REQUESTING. CB
*** NOTES 03/17/03 02:56:17 PM GIFT
SPOKE TO CUST, WILL HAVE REP INSPECT VEH AS SOON AS POSSIBLE.
*** NOTES 03/19/2003 10:47:28 AM LEITRER
CUST CB SEEK TO KNOW STATUS OF CASE. NCR ADV OF NOTES OF GIFT THAT VEH WILL BE INSPECTED ASAP. ADV CAN TAKE UP TO 30 DAYS FOR INSPECTION. ADDTL 30 FOR DECISION. CUST UNDERSTOOD.
*** NOTES 03/24/2003 08:43:36 AM SHROWN
CUST CALLED BACK SEEKING STATUS OF CASE. STS HAS SEEN WRODBY SHOP REP WHO EXPLAINED THAT NO ONE FROM TOY HAS SEEN OUT TO SEE VEH. CUST ASKS ANY INFO ON INSPECTION DATE AS IS WOUT A VEH & SEE POSSIBLE RENTAL ASSIST. INCR APOL & RE-ADV OF LAST REGION NOTES & HELPED CUST UNDERSTAND THAT REGION HAS UP TO

30 DAYS TO ACTUALLY INSPECT & UP TO 30 DAYS THERAPEER TO SHARE TOY'S FINDINGS. NCR ADV'D IN THE MIDST OF INVESTIGATION, TOY CAN NOT EXTEND A RENTAL.) CUST UNDERSTOOD.
*** NOTES 03/28/2003 06:44:10 AM ECAMPOS
CUST CB STS VEH HAS BEEN UNSEABLE SINCE THE 2/3/03. STS IF A TOY SHOULD PROVIDE RENTAL OR LONER. NCR APOL & ADV CONTACTED GST & LEFT MESSAGE REQ'STING CB TO CUST. CUST INSISTED ON GETTING REGION TEL #. NCR ADV DNA
Additional Summary:

Toyota ID No: 20040311234
NHTSA ODI No: 20030300
Vehicle: 2002 TOYOTA, LEXUS CAMRY, CAMRY SOLARA, ES300
Location of Incident: SAN ANTONIO, TX
NHTSA Summary:
*** PHONE LOG 03/11/2004 02:48:30 PM DDRURY
CUST STS WHILE PULLING INTO PARKING LOTS AND PRESSING ON BRAKES VEH SURGES FORWARD. CUST STS HAS NOTICE ACCELERATION WHEN USING CRUISE CONTROL AND COMING OFF AN INCLINE. CUST STS MOST RECENT CONCERN HAPPENED THREE WEEKS AGO. CUST PROB TO THAT CONCERNS STARTED A YEAR AGO. CUST SKS TO VOICE HIS CONCERNS.

*** CASE CLOSE 03/11/2004 02:48:54 PM DDRURY
NCR APOL AND ADV CUST OF CURRENT NHSTA ISSUE. CUST UNDERSTOOD. NCR ADV CUST IF CONCERNED SHOULD TAKE VEH TO DLR FOR INSPECTION. NCR PROVIDED CASE #
Additional Summary:

Toyota ID No: 20030310002
NHTSA ODI No:
Date of Incident: 20030300
Vehicle: 2002 TOYOTA, LEXUS CAMRY, CAMRY SOLARA, ES300
Location of Incident: BOLBROOK, NY
NHTSA Summary:
*** PHONE LOG 03/10/2003 11:10:16 AM SESTRADA
FA
NO PREV FILE
CUST STS ACCELATOR PEDAL IS STICKING IN VEH. STS EVEN W/FOOT ON BRAKE, VEH ACCELERATES. STS WAS ALMOST INVOLVED IN ACCIDENT DUE TO ACCELATOR PEDAL STICKING IN VEH. STS WAS NOT ACTUALLY INVOLVED IN ACCIDENT, BUT FELS VEH UNSAFE TO DRIVE. STS CONTACTED DLR WHO REFUSED TO DO RPR. STS RVC MGR ADV CUST CONTACT HAS TO CONTACT CAC TO HAVE SOMEONE FROM REG INSP VEH.
*** NOTES 03/19/03 05:29:54 AM NYS
CASE DISPATCHED TO DNFMS D. TOWNSEND AND J. PISTULLI AND CC FXS J NEE.

*** CASE CLOSE 03/21/03 06:59:16 AM NYS
DNFM TALKED WITH CUST, CUST TO TAKE VEH TO SUNRISE TOYOTA ON 3/21/03 FOR INSPECTION
Additional Summary:

Toyota ID No:
NHTSA ODI No: 10013380, 10017579

Date of Incident: 20010101
Vehicle: 2001 TOYOTA AVALON
Location of Incident: WESTMINSTER, CA
NHTSA Summary:
WHILE DRIVING AT 35 MPH VEHICLE SUDDENLY ACCELERATED OUT OF CONTROL HIT A PICKUP TRUCK, AND THEN HIT A TREE. THE DRIVER APPLIED THE BRAKES, BUT BRAKES FAILED TO STOP VEHICLE. THE PASSENGER IN THE PICKUP TRUCK SUSTAINED INJURIES AS WELL AS THE CONSUMER.*AK *JB *TN WHILE DRIVING, THE VEHICLE SUDDENLY ACCELERATED, THE CONSUMER LOST CONTROL OF THE VEHICLE AND HIT A PICKUP TRUCK AND CRASHED INTO A TREE. THE DRIVER SUSTAINED MINOR INJURIES, AND PASSENGER IN PICKUP TRUCK SUSTAINED MAJOR INJURIES. VEHICLE WAS BADLY DAMAGED. *AK *JB
Additional Summary:

Toyota ID No:
NHTSA ODI No: 10110101
Date of Incident: 20010105
Vehicle: 2001 LEXUS GS300
Location of Incident: WESTBURY, NY
NHTSA Summary:
MY COMPLAINT IS ON THE USE OF THE CRUISE CONTROL DEVICE AND THE HIDDEN DANGERS OF ITS USAGE, ESPECIALLY ON SLICK/POOR ROAD SURFACES. IF USED AND THE RESUME BUTTON IS ENGAGED THE CAR ATTEMPTS TO ACCELERATE TO THE SET SPEED WHILE THE TIRES HAVE NO TRACTION ON THE ROAD, CAUSING THE CAR TO SPIN OUT OF CONTROL, A SERIES OF 360'S. THIS IS A VERY SERIOUS UNPREDICTABLE SITUATION NO MATTER WHAT YOUR EXPERIENCE IS AS A DRIVER. WE CAN SAVE LIVES IF A WARNING WAS IN FULL VIEW IN ALL VEHICLES, SIMILAR TO THE AIRBAG AND SEATBELT WARNINGS. I AM AWARE OF SEVERAL INCIDENTS BUT HAVE FOUND THAT THERE IS NOT ENOUGH ACTION BEING TAKEN TO INFORM DRIVERS. IN ADDITION TO SOME TYPE OF WARNING LABEL, MY QUESTION IS, CAN ANY ACTION BE TAKEN BY ALL CAR MANUFACTURERS, TO DESIGN THE CRUISE CONTROL OPTION TO DISENGAGE IF THERE IS INADEQUATE ROAD TRACTION?*AK
Additional Summary:

Toyota ID No:
NHTSA ODI No: 10015571
Date of Incident: 20010210
Vehicle: 2001 TOYOTA CAMRY
Location of Incident: LEE'S SUMMIT, MO
NHTSA Summary:
THE VEHICLE EXPERIENCED SUDDEN ACCELERATION IMMEDIATELY AFTER THE PURCHASE OF A CERTIFIED USED VEHICLE. THE CONSUMER APPLIED THE BRAKES BUT THE VEHICLE DIDN'T RESPOND. THE IGNITION HAD TO BE TURNED OFF IN ORDER TO STOP THE VEHICLE. (MODEL XLE) MR. SCC *JB
Additional Summary:

Toyota ID No:
NHTSA ODI No: 10012211
Date of Incident: 20010310
Vehicle: 2000 TOYOTA ECHO
Location of Incident: WESTMONT, IL
NHTSA Summary:

WHILE APPLYING THE BRAKES VEHICLE ACCELERATED FORWARD. DEALER NOTIFIED. *NLM
Additional Summary:

Toyota ID No:
NHTSA ODI No: 10023329
Date of Incident: 10030324
Vehicle: 2002 TOYOTA CAMRY
Location of Incident: PASADENA, CA
NHTSA Summary:
2002 TOYOTA CAMRY SE: WHILE CAR WAS BEING BACKED DOWN A DRIVEWAY AT 2-3 MPH WITH DRIVER'S FOOT ON BRAKE, CAR ACCELERATED SUDDENLY AND UNCONTROLLABLY BACKWARDS AND CRASHED INTO A TREE. CAR WAS TOTALED. *NLM
Additional Summary:

Toyota ID No:
NHTSA ODI No: 10111527
Date of Incident: 20020324
Vehicle: 2003 TOYOTA COROLLA
Location of Incident: THOUSAND OAKS, CA
NHTSA Summary:
CONSUMER STATES WHEN TRYING TO BRING CAR TO STOP, HE HAD APPLY AN EXCESSIVE AMOUNT OF FORCE TO THE BRAKE. EVEN THOUGH RIGHT FOOT REMOVED FROM GAS PEDAL ENGINE DID NOT STOP. RF THE VEHICLE WAS STILL UNDER WARRANTY DURING THE TIME OF THE FAILURE. THE CONSUMER STATED WHILE HE WAS BACKING THE VEHICLE UP AT LESS THAN 15 MPH THE FAILURE OCCURRED. AFTER THE CONSUMERS FOOT WAS MOVED FROM THE GAS PEDAL HE HAD TO FORCEFULLY APPLY THE BRAKES. THE CONSUMER STATED THAT IT WAS NECESSARY TO SHUT OUT OF DRIVE TO BRING THE VEHICLE UNDER CONTROL. THE CONSUMER SHUT THE VEHICLE OFF AND LET IT SIT FOR A WHILE AND STARTED IT AGAIN AND DRIVE HOME WITH NO INCIDENT. *TC
Additional Summary:

Toyota ID No:
NHTSA ODI No: 10022695
Date of Incident: 20020402
Vehicle: 2002 TOYOTA CAMRY
Location of Incident: PALO ALTO, CA
NHTSA Summary:
VEHICLE'S NEW BRAKING SYSTEM WAS UNSAFE. BRAKE PEDAL HAD TO BE DEPRESSED ALMOST TO THE FLOOR BEFORE IT ENGAGED. AS A RESULT, THE CONSUMER ACCIDENTALLY HIT THE ACCELERATOR PEDAL WHILE BRAKING. *AK THE CONSUMERS WIFE WAS DRIVING THE VEHICLE, AND AS SHE TURNED THE CORNER, THE BRAKE WAS APPLIED AND DID NOT RESPOND. THE VEHICLE ACCELERATED OVER THE CURB, ONTO THE SIDE WALK, AND INTO THE LIBRARY. (ONE MUST PLACE THEIR FOOT ON THE CENTER OF THE BRAKE PEDAL AND THE RIGHT SIDE OF THE FOOT COULD POSSIBLY DEPRESS THE ACCELERATOR.) *SCC *JB
Additional Summary:

Toyota ID No:

NHTSA ODI No: 10071940
Date of Incident: 20050405
Vehicle: 2002 TOYOTA CAMRY
Location of Incident: MANSFIELD, NY
NHTSA Summary:
WHILE PARKED, THE VEHICLE ACCELERATED BACKWARDS. AS A RESULT, THE VEHICLE COLLIDED INTO A TREE. THE CAUSE OF INCIDENT HAS YET TO BE DETERMINED. *LA THE CONSUMER ATTEMPTED TO MOVE OUT OF THE PARKING SPACE. AS THE CONSUMERS FOOT WAS ON THE BRAKE AND THE VEHICLE WAS PLACED IN REVERSE, THE VEHICLE SHOT BACK AND HIT A TREE. *SC *JB
Additional Summary:

Toyota ID No:
NHTSA ODI No: 10039671
Date of Incident: 20050411
Vehicle: 2001 TOYOTA TUNDRA
Location of Incident: DENVER, CO
NHTSA Summary:
WHILE PASSING ANOTHER VEHICLE ON THE INTERSTATE, TRUCK BEGAN ACCELERATING RAPIDLY GOING FROM 65 MPH TO 95 MPH IN ABOUT 3 SECONDS. HAD TO APPLY BOTH FEET TO BRAKES TO STOP TRUCK. IT TOOK A HALF MILE TO STOP AND RPMS WERE AT 6000, BUT TRUCK INTO PARK -RPMS REMAINED, STEPPED ON GAS PEDAL - RPMS DROPPED ENOUGH (2500) TO GET OFF THE ROAD, ACCORDING TO DEALERSHIP MECHANIC. THE PROBLEM WAS A BROKEN ACCELERATOR CABLE AND A FACTORY DEFECT. *AK
Additional Summary:

Toyota ID No:
NHTSA ODI No: 10096993
Date of Incident: 20010418
Vehicle: 2002 TOYOTA CAMRY
Location of Incident: MIDLOTHIAN, VA
NHTSA Summary:
INTERMITTENTLY DURING BRAKING, THE VEHICLE COMMENCED TO ACCELERATE. THIS CONDITION OCCURRED ON THREE SEPARATE OCCASIONS. THE VEHICLE HAS BEEN TO THE DEALER ON THREE SEPARATE OCCASIONS AND THEY WERE UNABLE TO DUPLICATE THE PROBLEM. *JB
Additional Summary:

Toyota ID No:
NHTSA ODI No: 10017600
Date of Incident: 20010412
Vehicle: 2002 TOYOTA COROLLA
Location of Incident: IRVING, TX
NHTSA Summary:
WHILE DRIVING ON THE HIGHWAY, THE VEHICLE WAS ON CRUISE CONTROL. AFTER EXITING THE HIGHWAY, PRESSURE WAS APPLIED TO THE BRAKE PEDAL AND THE VEHICLE FAILED TO STOP. THE VEHICLE WAS TAKEN TO THE DEALERSHIP FOR REPAIRS. *JB
Additional Summary:

Toyota ID No:

NHTSA ODI No: 10017723
Date of Incident: 20030426
Vehicle: 2003 TOYOTA CAMRY
Location of Incident: STRAMPSCOTT, MA
NHTSA Summary:
CONSUMER COMPLAINED ABOUT AN INTERMITTENT ACCELERATION PROBLEM. WHEN THIS OCCURRED CONSUMER APPLIED THE BRAKES, BUT, VEHICLE DID NOT STOP. CONSUMER HAD TO SHUT OFF THE ENGINE IN ORDER TO GET THE VEHICLE TO STOP. *AK DEALER CANT LOCATE THE PROBLEM ON VEHICLE. *LA
Additional Summary:

Toyota ID No:
NHTSA ODI No: 10016877
Date of Incident: 20030427
Vehicle: 2002 TOYOTA HIGHLANDER
Location of Incident: HARLAN, KY
NHTSA Summary:
VEHICLE ACCELERATED ON ITS ON CAUSING VEHICLE TO START UP STEEP HILL WHERE THE FRONT END SLID TO THE RIGHT WHERE VEHICLE PROCEEDED TO GO UP A DRIVE/CARPORT STRIKING A PORCH AND ROCK WALL.
Additional Summary:

Toyota ID No:
NHTSA ODI No: 10013211
Date of Incident: 20020430
Vehicle: 2002 TOYOTA CAMRY
Location of Incident: BELEN, NM
NHTSA Summary:
WHEN TRYING TO PARK, THE DRIVER PRESSED THE BRAKE PEDAL AND THE VEHICLE SUDDENLY SURGED FORWARD. THE VEHICLE RAN OVER THE CURB AND HIT A SIGN. *AK THE CONSUMER WAS SLOWLY DRIVING IN THE PARKING LOT, FOUND A PARKING SPACE, THEN THE VEHICLE SUDDENLY ACCELERATED OVER THE CURB. *SC *JB
Additional Summary:

Toyota ID No: 3060515150626
NHTSA ODI No:
Date of Incident: 20030500
Vehicle: 2003 TOYOTA, LEXUS CAMRY
Location of Incident: HATTIESBURG, MS
NHTSA Summary:
*** PRIOR LOG 05/15/2003 11:06:59 AM CMCMORRIS
03 CAMRY. STS WHEN WIFE DRIVES VEH & PUTS FOOT ON BRAKE, MOTOR REVS UP & WIFE HAS CAME CLOSE TO ACCIDENT A COUPLE OF TIMES. STS WHEN ENGINE REVS UP HAS TO PUT VEH INTO NEUTRAL. STS ENGINE REVS UP ALSO WHEN VEH IN NEUTRAL. STS HAS TO APPLY MUCH PRESSURE TO BRAKE TO STOP VEH. STS WIFE DOES NOT FEEL SAFE DRIVING TO VEH. STS CONCERN HAS HAPPENED 2X TIMES (ABOUT 2 WEEKS AGO). STS 100% CERTAIN DID NOT HAVE FOOT ON ACCELERATOR. STS HAS NOT CONTACTED DLR.
*** CASE CLOSE 05/16/03 12:01:00 EDT
CALLED CUST 3-16-05 CUST BRINGING CAR IN FOR DEALER TO CHECK OUT.

Additional Summary:

Toyota ID No: 20010271440
NHTSA ODI No:
Date of Incident: 20030500
Vehicle: 2003 TOYOTA, LEXUS CAMRY
Location of Incident: LEVITTOWN, NY
NHTSA Summary:
*** PHONE LOG 05/27/2003 02:28:48 PM MCOTTERELL
CUST STS HE PURCH A 03 CAMRY IN LATE 2002. HE STS WHILE DRIVING WHEN HE IS COMING TO A STOP THE VEH ENGINE RACES. THIS IS AN INTERMITTENT CONCERN. HE STS THAT VEH MOVES FORWARD FROM A STOP WITHOUT HAVING TO PUT HIS FOOT ON THE ACCELERATOR(SCREEPING). HE DOES FEEL COMFORTABLE DRIVING THE VEH BECAUSE OF THESE CONCERNS. HE WILL BRING IN ON 5/29/03 & SES TO HAVE APPT.
*** CASE CLOSE 05/28/03 03:45:50 PM DLR31139
CRM SPOKE WITH THE CUST AND EXPLAINED HIS CONCERNS. CRM INVITED THE CUST IN TO TEST DRIVE WITH A TECH. CRM SET UP AN APPOINTMENT FOR THRUS. AT 10AM.
Additional Summary:

Toyota ID No: 20030509223
NHTSA ODI No:
Date of Incident: 20030500
Vehicle: 2002 TOYOTA, LEXUS CAMRY, CAMRY SOLARA, ES300
Location of Incident: LAS VEGAS, NV
NHTSA Summary:
*** PHONE LOG 05/07/2003 05:19:23 PM TOBIRA
CUST STS THERE HAVE BEEN 3 INSTANCES WHERE CAR DOES NOT STOP. CUST STS CAN HEAR ABS CLICKING AND CUST PRESSES BRAKES, BUT VEH ACCELERATES, SO CUST CRASHED INTO GARDEN AND THE ROD BROKE. CUST STS TOOK VEH TO DLR BUT CUST FLS DLR DOES NOT BELIEVE THAT THERE IS ANYTHING WRONG WITH VEH. CUST STS DLR STS THE ROD IS NOT COVERED UNDER WARR. CUST STS SPOKE TO JASON SERVICE ADVISOR AND CRM NOT INVOLVED.
*** NOTES 05/12/2003 02:42:48 PM TERYSIMES
CUST CALLED BACK NOR APPL NOR ADV CUST DLR CRM HAS 3 BUSINESS DAYS TO CONTACT NCR. ADV IF CRM DOES NOT CONTACT IN 3 BUSINESS DATS TO USE CASE NUMBER AND CONTACT CAL.
*** CASE CLOSE 05/23/03 12:40:50 BSILEMOR
CRM HAD BOTH SRV MGR AND DISTRICT MGR ROAD TEST VEH. ALSO TEC INSPECTED VEH TO FIND NO MACHANICAL FAILURE WITH EITHER BRAKES OR IDLE. CUST ADVISED. CUST IN 3/16 TO HAVE PLASTIC INSERTS TO HOLD UNDER PACHES INSTALLED. VEH CKS SOUND AT THIS TIME.
Additional Summary:

Toyota ID No: 20010301046
NHTSA ODI No: 20010500
Date of Incident: 2002 TOYOTA, LEXUS CAMRY, CAMRY SOLARA, ES300
Location of Incident: LAS VEGAS, NV
NHTSA Summary:
*** PHONE LOG 07/30/2003 09:01:16 AM EOBOSECO
PA
PREV CASE 20010509223
CUST CTS STS THE VEH STILL HAS THE CONCERN WITH THE VEH ACCELERATES AND SEOVER FORWARD. CUST STS HAS TAKEN THE VEH TO THE DLR AX FOR THE SAME

CONCERN WITH THE BRAKES. CUST STS WHEN PRESSING HARD ON THE BRAKE THEY MAKE A SOUND
*** NOTES 06/10/03 04:34:46 PM DVR4
DSPM 1:M REQ CB AT 1:3PM.
*** NOTES 06/10/03 04:25:42 PM DVR4
PREVIOUS NOTE TO FILE DATED 06/10/03 WAS RECEIVED FROM DSPM ON 06/05/03.

*** CASE CLOSE 06/10/03 09:26:17 AM DVR4
CUSTOMER HAS NOT CONTACTED DSPM. DSPM HAD PREVIOUSLY TEST DRIVEN VEHICLE ON APPROXIMATELY 5/15/03 WITH DEALER SM. DSPM DID NOT NOTICE ANY ABNORMAL OPERATING CHARACTERISTICS AT THAT TIME.
Additional Summary:

Toyota ID No: 20030528107*9
NHTSA ODI No:
Date of Incident: 20030500
Vehicle: 2003 TOYOTA, LEXUS CAMRY, CAMRY SOLARA, ES300
Location of Incident: BOAZ, AL
NHTSA Summary:
*** PHONE LOG 05/28/2003 01:44:07 PM CCONVIS
CUST STS WHEN VEH ZOOMS AT A STOP SIGN IT FEELS LIKE THE ENGINE IS IDLING HIGH AS THE RPMS RAISE UP CONSIDERABLE. CUST STS NO CRM YET. CUST STS CONCERN HAS ONLY OCCURED 2X BUT FEELS CONCERNED ABOUT VEH LURCHING FORWARD AND CAUSING AN ACCIDENT
*** CASE CLOSE 06/09/03 12:41:05 BSILEMOR
DEALER UNABLE TO VERIFY COMPLAINT. ASM TECH ASSISTANCE AND FIELD SERVICE TECHNICIAN HAVE BEEN CONTACTED. NO ADVISE OR ASSISTANCE OFFERED DEALER. OWNER HAS BEEN ADVISED
Additional Summary:

Toyota ID No: 20030315047*1
NHTSA ODI No: 20030500
Date of Incident:
Vehicle: 2003 TOYOTA, LEXUS CAMRY, CAMRY SOLARA, ES300
Location of Incident: VINMITIA, PA
NHTSA Summary:
*** PHONE LOG 05/15/2003 10:22:12 AM JOHNSON CUST STD YESTERDAY WAS DRIVING UP DRIVEWAY WHEEL CUST HAS TO MAKE 90 DEGREE TO TURN INTO GARAGE. CUST STD VEH ACCELERATED AFTER ENTERING GARAGE AND RAN THROUGH BACK BRICK WALL. CUST STD VEH HAS FRONT END DAMAGE AND GARAGE WALL NEEDS TO BE REBUILT. CUST STD DID NOT HAVE FOOT ON ACCELERATOR PEDALS. ONLY ON BRAKE PEDALS. CUST ALSO STD PROVIOUSLY VEH REVS HIGH WHEN STARTING AND CAN FEEL HARSH SHIFTING WHEN DRIVING. CUST STD IS AFRAID TO DRIVE VEH & FEES FOR REAL ESTATE.
*** NOTES 05/15/2003 10:41:44 AM JOHNSONS TO: KYLE MAUNAGHTON, CR ANALYST FROM: JOSEPH JOHNSON, LCS TEL:9710-445-3521 HI KYLE, CAN YOU PLEASE LOOK INTO CASE AND ADV IF A PIR CAN BE PERFORMED. I HAVE ALSO INFORMED A SAMARI, DOM. OF CUST'S ACCIDENT. VEH IS CURRENTLY AT CUST'S RESIDENCE. PLEASE LET ME KNOW IF FURTHER ACCIDENT INFO IS NEEDED TO PROCEED FORWARD. THANKS, JOSEPH ***
SURCASE 20030315047-1 CREATED 05/15/2003 10:46:15 AM JOHNSON *** NOTES 05/15/03 11:49:40 AM KMANAUGHTONSOB AREA WILL DISPATCH CASE TO PTS OR DOM. LCS WILL BE UPDATED WHEN MORE INFORMATION IS RECEIVED *** PHONE LOG 05/16/2003 01:25:54 PM JOHNSON ACTION TYPE: OUTGOING CALL TRIED TO CONTACT CUST REGARDING PIR

REQUEST. TELL JUST RDIGS & KINGS. *** PHONE LOG 05/19/2003 04:24:31 PM JOHNSON ACTION TYPE: OUTGOING CALL CALLED CUST, NOT AVAIL. LEFT MSG UPDATING CUST THAT LEXUS IS REVIEWING REQUEST FOR PIR AND I WILL KEEP CUST POSTED FOR NEW INFO. *** EMAIL OUT 05/23/2003 08:53:21 AM KCASANO ACTION TYPE: INTERNAL EMAIL SEND TO: JOSEPH_JOHNSON@TOYOTA.COM CC LIST: KYLE_MAUNAGHTON@TOYOTA.COM ERIN FROM THE DLR CLLD AND THE VEH IS AT ROHRICH VOLKSWAGON AND MAZDA DLR THE LOCATION OF THE VEH IS AT THE COLLISION CENTER AT FOR THOSE DLRS AT 2600 WEST LIBERTY AVENUE PITTSBURGH, PA 15216. HEIN PROVIDED THE NEW NUMBERS FOR THE CUST CONTACT. CELL 724-942-0189 AND WORK NUMBER IS 724-561-0400 X208. I ADV THAT I WOULD FAXS THE MSG TO THE REP. I MADE SOME CHANGES IN THE CUST CONTACT I
Additional Summary:

Toyota ID No:
NHTSA ODI No: 10013315
Date of Incident: 20010500
Vehicle: 2002 LEXUS RX300
Location of Incident: SAND SPRINGS, OK
NHTSA Summary:
THROTTLE BECAME STUCK ON 2002 LEXUS RX300 WHILE CAR WAS BEING DRIVEN CAUSING IT TO RAPIDLY ACCELERATE. CAR HAD TO BE TURNED OFF BEFORE IT COULD BE STOPPED. CAR WAS TOWED TO LEXUS DEALER. I WAS TOLD IT WAS JUST A "FREAK" ACCIDENT THAT A TINY PIECE OF PLASTIC HAD GOTTEN SUCKED INTO THROTTLE. I WANT TO BE SURE THIS WAS AN ACCIDENT AND IS NOT A DEFECT. *JB
Additional Summary:

Toyota ID No:
NHTSA ODI No: 10012160
Date of Incident: 20010507
Vehicle: 2002 LEXUS RX300
Location of Incident: GLENDALE, CA
NHTSA Summary:
WHILE DOING SLOW THE CAR ACCELERATES SUDDENLY, ALREADY THIS HAPPENED TWICE AND BOTH TIMES I HIT THE WALL. *JB
Additional Summary:

Toyota ID No:
NHTSA ODI No: 10024211
Date of Incident: 20010509
Vehicle: 2002 TOYOTA CAMRY
Location of Incident: FAR HILLS, NJ
NHTSA Summary:
WHILE ATTEMPTING TO PARK WITH FOOT APPLIED TO BRAKE PEDAL VEHICLE SUDDENLY ACCELERATED, CRASHING INTO A TREE. *AK
Additional Summary:

Toyota ID No:
NHTSA ODI No: 10021016
Date of Incident: 20010511
Vehicle: 2000 TOYOTA CAMRY
Location of Incident: ROCHESTER, NY

NHTSA Summary:
WHEN ATTEMPTING TO ACCELERATE (PRESSING GAS PEDAL), VEHICLE WILL NOT SPEED UP FOR SEVERAL SECONDS, AND THEN IT ABRUPTLY LUNGES FORWARD AT AN INCREASED SPEED, POSING A SAFETY HAZARD. THIS HAS HAPPENED REPEATEDLY STARTING WITHIN A COUPLE OF DAYS OF BUYING THE CAR. THIS IS PARTICULARLY CONCERNING WHEN DRIVING ON AN EXPRESSWAY RAMP. THUS I HAVE BEEN AVOIDING DRIVING ON THE EXPRESSWAY. ALSO, THE BRAKES WORK ABNORMALLY. THERE WAS EXCESSIVE VIBRATION, SQUEEKING, AND BRAKE SENSITIVITY. I TOOK THE CAR TO THE DEALER WITHIN 3 DAYS OF PURCHASE AND SUBSEQUENTLY RETURNED IT 4 MORE TIMES. THEY ONLY ACKNOWLEDGED THAT THE ROTORS WERE WARPED AND RESURFACED THEM. OTHERWISE, THEY DENY THERE IS ANY OTHER PROBLEM. THEY BLAMED THE ACCELERATION PROBLEM ON THE A/C BEING TURNED ON. HOWEVER, THE PROBLEM PERSISTS REGARDLESS TO WHETHER THE ACCESSORIES ARE TURNED ON OR OFF OR HOW HIGH THEY ARE TURNED ON. *NLM
Additional Summary:

Toyota ID No: 10019975
NHTSA ODI No: 20030514
Date of Incident: 2003 TOYOTA CAMRY
Location of Incident: PLAINVIEW, NY
NHTSA Summary:
THE VEHICLE EXPERIENCED SUDDEN ACCELERATION WHEN THE GEAR WAS SHIFTED FROM PARK TO DRIVE, AND COLLIDED WITH SEVEN OTHER VEHICLES. *JB. CONSUMER TRIED TO STOP THE VEHICLE BY APPLYING THE BRAKES HOWEVER THE BRAKES FAILED AND THE ENGINE CONTINUED TO RACE. *TT *JB
Additional Summary:

Toyota ID No:
NHTSA ODI No: 10131865
Date of Incident: 20030516
Vehicle: 2003 LEXUS ES300
Location of Incident: PACIFIC PALISADES, CA
NHTSA Summary:
SINCE I PURCHASED THE CAR, I HAVE BEEN COMPLAINING ABOUT A HESITATION AND STUTTERING WHEN ACCELERATING AFTER A SLOW-DOWN OR A STOP. I WAS TOLD THERE WAS NOTHING WRONG SEVERAL TIMES AND MORE RECENTLY HAVE BEEN TOLD IT IS A DESIGN FLAW IN THE COMPUTER-CONTROLLED ACCELERATOR AND CANNOT BE FIXED. I HAVE SEVERAL TIMES HAD A CLOSE CALL ON THE FREEWAY WHEN I NEEDED TO ACCELERATE QUICKLY AND THE CAR HESITATED BEFORE ACCELERATING. I HAVE NOT HAD AN ACCIDENT, BUT HAVE BEEN VERY FRIGHTENED BY THE DELAY IN PERFORMANCE. I HAVE HAD 2 PREVIOUS LEXUS ES 2000 THAT DID NOT HAVE THIS PROBLEM. *NM
Additional Summary:

Toyota ID No: 20040315113*4
NHTSA ODI No: 20040300
Date of Incident: 20030527
Vehicle: 2003 TOYOTA, LEXUS CAMRY, CAMRY SOLARA, ES300
Location of Incident: APPLETON, WI
NHTSA Summary:
*** PHONE LOG 05/30/2004 03:00:55 PM HSOV

KNW#048217-000003
CUST STS THAT THOUGH TRANSMISSION COMPUTER HAS BEEN REPROGRAMMED (ACCORDING TO
DEALER) TRANSMISSION CONTINUES TO SHIFT ERRATICALLY.
BRAKE PEDAL IS SPONGY AND TRAVELS BELOW ACCELERATOR PEDAL CAUSING RIGHT FOOT TO BE ON BOTH PEDALS AT THE SAME TIME.
CAR HAS SURGED FORWARD SEVERAL TIMES EVEN THOUGH ACCELERATOR PEDAL WAS UNTOUCHED AT THE TIME.
*** SUBCASE 20040318111-1 CREATED 03/18/2004 03:01:26 PM HSOV
NCR E-MAILED:
<-AS-HTML->
THANK YOU FOR CONTACTING TOYOTA MOTOR SALES, U.S.A., INC.<P>
WE APOLOGIZE FOR YOUR CONCERNS WITH YOUR 2003 CAMRY.<P>
IN ORDER TO PROPERLY ASSESS YOUR CONCERNS, WE HAVE CONTACTED THE CUSTOMER RELATIONS MANAGER AT SOLUSIO TOYOTA TO FURTHER EVALUATE YOUR VEHICLE.<P>
TOYOTA DEALERSHIP TECHNICIANS ARE SPECIALIZED IN THE DIAGNOSIS AND REPAIR OF TOYOTA VEHICLES. THEY ARE PROVIDED WITH EXTENSIVE TRAINING AND HAVE ACCESS TO STATE-OF-THE-ART EQUIPMENT TO HELP IN THE ACCURATE DIAGNOSIS OF YOUR VEHICLE. ALSO, IF NECESSARY, WE PROVIDE ADDITIONAL SUPPORT TO ASSIST TOYOTA DEALERSHIP TECHNICIANS IN RESOLVING UNUSUAL VEHICLE CONCERNS.<P>
THE CUSTOMER RELATIONS MANAGER WILL CONTACT YOU BY THE END OF THE BUSINESS DAY, TUESDAY, MARCH 23RD. IN THE EVENT YOU DO NOT RECEIVE ANY CONTACT FROM THE DEALERSHIP BY THIS DATE, PLEASE <A HREF =" HTTP://TOYOTA.CUSTHELP.COM/CGI-
BIN/TOYOTA.CFG/PHP/ENDUSER/STD_ADP.PHP?P_FAQID=164?TAB GET=_BLANK ">CONTACT US</A> WITH FILE #20040318111</P>
TOYOTA CUSTOMER EXPERIENCE
<-AS-HTML->
END RESPONSE
*** SUBCASE 20040318111-1 CLOSED 03/18/2004 03:01:37 PM HSOV
Additional Summary:

Toyota ID No:
NHTSA ODI No: 10024048
Date of Incident: 20010529
Vehicle: 2002 TOYOTA CAMRY
Location of Incident: FARMINGDALE, NY
NHTSA Summary:
THE DRIVER SHIFTED THE VEHICLE INTO DRIVE AND THE VEHICLE IMMEDIATELY ACCELERATED UP TO ABOUT 20 MPH. THE VEHICLE HIT A CAR AND A TREE BEFORE IT STOPPED. *AK *CD *NLM
Additional Summary:

Toyota ID No:
NHTSA ODI No: 10002687
Date of Incident: 20010529
Vehicle: 2004 TOYOTA COROLLA
Location of Incident: CHERRYDALE, CA
NHTSA Summary:
I BOUGHT A BRAND NEW 2004 TOYOTA COROLLA IN MAY THIS YEAR. A FEW DAYS LATER I WAS DRIVING ON THE FREE WAY AND THE NEW CAR ACCELERATED BY ITSELF. I TRIED TO STEP ON THE BRAKE TO SLOW DOWN, IT BECAME UNCONTROLLABLE. I WAS DRIVING

AT 60 MILES PER HOUR. FINALLY I HAVE TO EXIT THE FREE WAY AND THE CAR HIT THE DIVIDER AND GOT TOTALLY CRASHED.*AK
Additional Summary:

Toyota ID No: 20030612166
NHTSA ODI No:
Date of Incident: 20030600
Vehicle: 2002 TOYOTA, LEXUS CAMRY, CAMRY SOLARA, ES300
Location of Incident: TEMPE, AZ
NHTSA Summary:
*** PHONE LOG 06/12/2003 03:41:40 PM ASCHWARTZ
<==FCRP==>
LETTER RECD-JUNE 9, 2003
CUST STS WAS STOPPED AT A STOP SIGN AND THE VEH LUNGED FORWARD AND ANOTHER VEH STRUCK CUST VEH TRAVELING AT 40 MPH. CUST STS ITS PRODUCT IS TO BLAME FOR ACCIDENT. CUST STS ALSO VEH STALLED OUT. CUST GOS INSPECTION OF VEH FOR CONCERN WITH BRAKES AND STALLING. LEGAL REQUESTS FIELD CONTACT REPORT WITH MANY INTERIOR AND EXTERIOR PHOTOS

*** CASE CLOSE 06/12/2003 03:42:48 PM ASCHWARTZ
NCR AHOL AND ADV CALLED CUST BACK AND LEFT MSG WITH WIFE.
*** NOTES 06/13/2003 04:29:22 PM ASCHWARTZ
-INCOMING CUST CALL-
CUST CALLED BACK WITH MORE INFORMATION FOR LEGAL TAB. NCR OPENED FILE TO REGION FOR FCRP.

*** CASE CLOSE 07/24/03 08:06:04 AM DVR4
FTS, SCO77 WEIGHT, UNABLE TO PSEP VEH AS INS. COMPANY (FARMERS INSURANCE) SOLD VEH. AT CUST DISCRETION. FTS ADV CUST THAT COULD NOT PSEP BECAUSE OF MITIGATION AND CUST OK.
Additional Summary:

Toyota ID No: 20030670972
NHTSA ODI No:
Date of Incident: 20030600
Vehicle: 2002 TOYOTA, LEXUS CAMRY, CAMRY SOLARA, ES300
Location of Incident: GREENSBURG, PA
NHTSA Summary:
*** PHONE LOG 06/17/2003 04:14:25 PM GEAULSTECH
<==FCRP==>
LARRY, FROM STATE FARM AT 724-836-9156 STS THAT CUST CLAIMS ACCELERATOR STUCK, AND THEY REARENDED A VEH IN FRONT OF THEM TWICE. CUST STS THE VEH IN FRONT OF THEM PUT THE VEH ON REVERSE TO GET THEM TO SLOW THE CUST VEH DOWN. DANTE WAS DRIVER. CUST STS VEH HAS FRONT END DAMAGE. LARRY STS DOESN'T HAVE ESTIMATES OF DAMAGES YET. CUST STS WIFE, MARY IN VEH. PLS MANU INSPECT, SRS INSPECTION. LEGAL REQUESTS FCRP WITH MANY INTERIOR AND EXTERIOR PHOTOS
*** NOTES 06/17/2003 01:14:00 PM GEAULSTECH
-NOTES TO REGION-
ON CASE IS FOR LARRY M AT STATE FARM INSURANCE, PLEASE CONTACT LARRY FOR ALL INFO RE: GAS.
*** NOTES 06/18/03 06:25:49 AM CAT3
CONTACTED LARRY M AT STATE FARM (724-836-9156) FOR LOCATION OF VEHICLE. VEH LOCATED AT MONONGNAS, LOES ROAD, RT 30 EAST, GREENSBURG,PA., 724-838-0444, PATSY

MONONGNA CONTACT. AVISD INS AGNT TOYOTA HAS 30 DAYS TO DO INSPECTION. HE REQUESTS TO KNOW DATE BECAUSE CUSTOMER DOES NOT HAVE LOANER INSUR COV FOR 30 DAYS. ADV'D WLD LET HIM KNOW WHEN OUR INSPECTOR GAVE US A DATE.
*** NOTES 06/19/03 07:59:47 AM CAT3
SPOKE TO DSPM. HE CAN DO INSPECTION 6/20. ADV'D INSURANCE AGENT.

*** CASE CLOSE 07/14/03 08:24:14 AM CAT3
ISRM INSPECTED VEHICLE, REPORT AND PHOTOS SENT TO TECHNICAL FOR REVIEW. LETTER SENT TO CUSTOMER REGARDING FINDINGS.
Additional Summary:

Toyota ID No: 20020630152
NHTSA ODI No:
Date of Incident: 20030600
Vehicle: 2003 TOYOTA, LEXUS CAMRY, CAMRY SOLARA, ES300
Location of Incident: GOSHEN, NY
NHTSA Summary:
*** PHONE LOG 06/20/2003 07:40:01 AM DCHILES PUR/CHASED VEH JWES AGO, SINCE THE 1000 MILE CHECK, NOTICE ENGINE REV & PULL FORWARD & CUST HAD TO TURN OFF THE ENGINE TO STOP VEH. CUST CLLD F/A & TOOK TO DLR. DLR INSPECTED & ADV THEY COULDN'T FIND ANYTHING. CUST THEN ASKED FOR FURTHER INSPECTION FROM A LEXUS REP & THE DLR ADVISED HE WOULD HAVE TO CONTACT LCS TO SEND THAT REQUEST. *** NOTES 06/20/2003 07:37:07 AM DCHILES TO: VICKI NOORGIAN, ISM FROM: DEXONA CHILES, 216-464-2260 CUST STS CONCERN W/ ENGINE REVVING & PULLING FORWARD THAT CUST HAD TO TURN OFF THE ENGINE TO GET THE VEH TO STOP. CUST STS HE WOULD LIKE FURTHER INSPECTION FROM A LEXUS REP & WAS TOLD TO CONTACT LCS FOR THE REQUEST. PLEASE RELAY THE REQUEST FOR INSPECTION TO THE DOM & F/UP W/ ME REGARDING HIS COMMENTS. *** SUBCASE 20030630152-1 CREATED 06/20/2003 07:37:34 AM DCHILES *** DEALER NOTES: 06/23/03 12:33:41 PTS ADVISED THAT THE EARLIEST DATE TO SEE CAR IS JULY 3RD. CUSTOMER WILL NOT TAKE CA AND DEALER IS AFRAID CAR WILL BE ALEMON BY THEN *** DEALER MESSAGE: 06/23/03 11:28:23 ETS HERE ON TOYOTA/ALER. SAYS CAR WILL B LEMON BY THEN *** PHONE LOG 06/24/2003 09:45:59 AM DCHILES ACTION TYPE: OUTGOING CALL CALLED DLR & SPOKE WITH VICKI WHO ADV THE CUST VEH IS AT THE DLR & THEY WILL NOT TAKE IT BACK UNTIL THE INSPECTION HAS BEEN MADE BY A REP. LEFT VMSG FOR MCECCON FOR FURTHER INFO. *** SUBCASE 20030630152-1 CLOSED 06/24/2003 09:46:11 AM DCHILES *** SUBCASE 20030630152-2 CREATED 06/24/2003 09:46:28 AM DCHILES *** PHONE LOG 06/26/2003 09:51:28 AM DCHILES ACTION TYPE: INCOMING CALL MCECCON CALLED & ADV B/C OF THE DAYS DOWN, HE'S CONCERNED VEH MAY BE LEMON. MCECCON ADV HE MADE FTS AWARE OF THE SITUATION. ADV THE CUST REQUESTED THE INSPECTION & DOESN'T WANT TO PICK UP THE VEH, SO THEY WILL WAIT UNTIL INSPECTION. ASKED IF CUST WAS AWARE OF THE DATE. MIKE ADV YES. THANKED FOR CALLING. *** SUBCASE 20030630152-2 CLOSED 06/26/2003 09:51:40 AM DCHILES *** SUBCASE 20030630152-3 CREAT
Additional Summary:

Toyota ID No: 20010625708
NHTSA ODI No:
Date of Incident: 20030600
Vehicle: 2003 TOYOTA, LEXUS CAMRY, CAMRY SOLARA, ES300
Location of Incident: LA QUINTA, CA
NHTSA Summary:
*** PHONE LOG 06/25/2003 10:56:09 AM STHOMAS CUST STATED THAT HE IS EXTREMELY DISSATISFIED WITH HIS VEH. HE ADV THAT HIS VEH BEGINS WHEN TRYING TO

ACCELERATE. HE STATED THAT WHEN STOPPED, IT WILL REV HIGH AND SURGE FORWARD. CUST ALSO ADV THAT HE IS EXPERIENCING A WHIRLING NOISE IN THE VEH THAT THE DLR HAS NOT DIAGNOSED. CUST IS CURRENTLY WORKING WITH DESERT LEXUS, BUT DID NOT PURCHASE THE VEH THERE. CUST STATED HE EXPECTS VEH TO RUN BETTER OR HE WANTS IT BOUGHT BACK. VEH ONLY HAS 2K MIS. *** NOTES 06/25/2003 10:57:21 AM STHOMAS TO: GEORGE GLOVER, ISM FROM: SHERRY THOMAS (714)666-2163 CUST HAS MULTIPLE CONCERNS WITH HIS ES 300. HE ADV VEH HESITATES AND SURGES. CUST ALSO ADV THAT HE IS EXPERIENCING A WHIRLING NOISE THAT DLR DID NOT DIAGNOSE. CUST STATED HE EITHER WANTS VEH REPAIRED COMPLETELY, OR HE WANTS HIS VEH BOUGHT BACK. PLEASE CONTACT ME TO DISCUSS. THANK YOU! *** SUBCASE 20030625708-1 CREATED 06/25/2003 10:57:35 AM STHOMAS *** PHONE LOG 06/26/2003 02:45:14 PM STHOMAS ACTION TYPE: INCOMING CALL ISM, GEORGE GLOVER CALLED IN HE ADV THAT HIS TECH ADV VEH IS OPERATING AS DESIGNED. DLR WAS UNABLE TO DUPLICATE ANY OF HIS CONCERNS. DLR ADV THAT HE HAS HAD SOME CONCERNS WITH THE DLR-CUST RELATIONSHIP ALREADY IN THE PAST. DLR STATED HE WILL SPEAK WITH DOM, LMIYATAKE, TO ADV IF SHE IS WILLING TO MEET WITH CUST AS HE IS SEEKING POSSIBLE BUY BACK. *** NOTES 07/10/2003 04:23:33 AM STHOMAS LETTER DISPATCHED 7/9/03 HIGHLIGHTING CUST'S SAME CONCERNS. CUST STATES HE WANTS HIS VEH BOUGHT BACK. *** PHONE LOG 07/10/2003 08:38:26 AM STHOMAS ACTION TYPE: OUTGOING CALL I SPOKE WITH ISM, GEORGE GLOVER. HE ADV THAT DOM, LYNN MIYATAKE WAS TO FXC WITH LCS. I ADV THAT ISM HAS NOT CONTACTED US. I ADV ISM THAT CUST SENT IN A LETTER STATING HE WANTS HIS VEH BOUGHT BACK. ISM SUGGESTED F/U WITH DOM. I ADV THAT I WOULD CONTACT HER. *** PHONE LOG 07/10/2003 08:40:03 AM STHOMAS ACTION TYPE: OUTGOING CALL I LEFT A DETAILED MSG FOR DOM, LMIYATAKE, REQUESTING CB.T
Additional Summary:

Toyota ID No: 20030604159
NHTSA ODI No:
Date of Incident: 20030600
Vehicle: 2003 TOYOTA, LEXUS CAMRY, CAMRY SOLARA, ES300
Location of Incident: HOUSTON, TX
NHTSA Summary:
*** PHONE LOG 06/04/2003 04:00:34 PM ASCHWARTZ
<==FCRP==>
CUST STS WAS PULLING INTO PARKING GARAGE AT 3901 BRIARPARK HOUSTON, TX. CUST STS THAT AS CUST BRAKES THE VEH SURGED FORWARD STRIKING THE WALL IN FRONT OF THE PARKING SPOT. CUST FILS THAT PRODUCT IS TO BLAME FOR CONCERN. CUST DRIVER, WEARING SEATBELT, INJURIES TO BACK. CUST SRS INSPECTION TO DETERMINE CAUSE OF CONDITION. LEGAL REQUESTS FIELD CONTACT REPORT WITH MANY INTERIOR AND EXTERIOR PHOTOS
*** NOTES 06/09/03 03:15:57 PM GST3
L-M DAYS VOICE MAIL.
*** NOTES 06/11/03 07:19:50 AM GST3
L-M FOR CUST AGAIN. EXPL OK VM THAT MY FTS CURR @TMS. ADV I WOULD CONT DLR. B/S & REQ THEY TAKE PHOTOS OF DAMAGE AS TO NOT HOLD UP HER RPRS. I WOULD HAVE MY FTS FIRST PSEP ON BEARING SYSTEM AFTER BODY RPRS HAVE BEEN COMPLETED & BEFORE SHE IS BACK IN THE CAR. ADV SHE WAS WELCOME TO CALL ME BACK TO DISCUSS FURTHER (8MF CLLD ME AFTER HOURS). ALSO CLLD 4297578 B/S & L-M FOR E/S MGR REQ HE TAKE PHOTOS & EMAIL THEM TO ME.
*** NOTES 06/12/03 08:01:05 AM GST3
RECD PHOTOS VIA EMAIL FROM DLR. TODAY-WILL FORWARD TO FTS FOR REVIEW-MINIMAL DAMAGE. REQ MGR-CUST YESTERDAY. SHE WANTED TO MAKE SURE THAT IF SHE ALLOWED THE B/S TO BEGIN REPAIRS WE COULD STILL PSEP. LADY THAT WAS NO

PROB-WE WOULD INSP BEFORE SHE GOT BACK IN HER VEH. SHE STATED THAT SHE WAS PULLING INTO A PARKING SPACE, LIGHTLY BRAKING AS YOU NORMALLY WOULD, WHEN SUDDENLY THE VEH ACCELERATED & SHE HIT THE PARKING GARAGE WALL. SHE FEELS THAT FOR THE THROTTLE STUCK. -
*** NOTES 06/10/03 08:32:44 AM GST3
I ADV I DIDNT THINK THAT WAS FOR DSE TO THE WAY IT IS NOW DESIGNED BUT I WOULD ADV THE FTS AN TO WHAT SHE FELT HAPPENED
*** NOTES 06/26/03 11:54:41 AM GST3
CUST CLLD - LM V/M STATED B/S HAD CONT HER & VEH WOULD BE READY TO BE P/U TOMOROW. REQ CONT FTS & FTS WILL INSP THIS AFTERNOON. REQ CONT CUST & SHE WAS PLSD.

*** CASE CLOSE 07/03/03 02:03:54 PM GST3
FTS INSP VEH ON 6/26/03 AS SCHED @4/07/25 B/S. VEH BODY RPRS HAD BEEN COMPLETED, FTS CHECKED THROTTLE POSITION SENSO
Additional Summary:

Toyota ID No:
NHTSA ODI No: 10250990
Date of Incident: 20010602
Vehicle: 2002 TOYOTA CAMRY
Location of Incident: MELROSE, MA
NHTSA Summary:
TL*THE CONTACT OWNS A 2002 TOYOTA CAMRY LE. WHILE DRIVING INTO A PARKING SPACE AND APPLYING PRESSURE TO THE BRAKE PEDAL THE VEHICLE UNEXPECTEDLY ACCELERATED. THE VEHICLE CAME TO A COMPLETE STOP IMMEDIATELY AFTER AN AGGRESSIVE FORCE WAS APPLIED TO THE BRAKE PEDAL. THE IDENTICAL FAILURE OCCURRED ON A SEPARATE OCCASION WITHOUT WARNING. THE CAUSE OF THE FAILURE HAS NOT BEEN DETERMINED. THE CONTACT HAD CONCERNS OF THE SAFETY RISK INVOLVED. UPDATED 11/12/09 *BF UPDATED 11/24/09
Additional Summary:

Toyota ID No:
NHTSA ODI No: 10080663
Date of Incident: 20010604
Vehicle: 2001 TOYOTA CAMRY
Location of Incident: ROYAL OAK, MI
NHTSA Summary:
WITHIN 3 WEEKS FROM PURCHASE DATE THE CAR ACCELERATED WHEN I ATTEMPTED TO BRAKE. THIS HAPPENED TWICE I TOOK THE CAR TO THE DEALER WHO WAS UNABLE TO FIND ANYTHING WRONG. THEY HAD THE CAR FOR A MONTH IN THAT TIME CORPORATION REPS ALSO TRIED TO FIND THE FAULT. THEY WERE UNABLE TO. I WAS TOLD CAR WAS FINE. I WAS TERRIFIED TO DRIVE IT AND WOULD NOT TAKE IT. THE DEALER WOULD ASSUME NO RESPONSIBILITY AND SAID IF I WANTED A NEW CAR I WOULD HAVE TO TRADE THIS MONEY IN TOWARDS THE PURCHASE OF A NEW CAR. BECAUSE I WAS SO AFRAID TO DRIVE IT AND WOULD NOT TAKE THE CAR ANYPLACE ELSE TO SELL BECAUSE I KNEW HOW DANGEROUS IT WAS (AND SO DID THE DEALER AND IF THEY SOLD THAT DANGEROUS CAR TO ANOTHER IT WAS ON THEIR RESPONSIBILITY NOT MINE) I ACCEPTED THE CONDITIONS PUT FORTH BY MY DEALER AND TRADED MY 3 WEEK OLD TOYOTA IN FOR A NEW TOYOTA AND HAS TO PAY AN ADDITIONAL $4000.00 BECAUSE THE 3 WEEK OLD CAR WITH LESS THAN 1200 MILES ON IT WAS NOW A USED CAR. *AK
Additional Summary:

Toyota ID No: 10064169
NHTSA ODI No:
Date of Incident: 20030603
Vehicle: 2003 TOYOTA AVALON
Location of Incident: BROOKLYN, NY
NHTSA Summary:
VEHICLE EXPERIENCED SUDDEN ACCELERATION. JUMPED A CURB AND ENDED UP IN STORE FRONT. *MR. THE CONSUMER HAD DRIVEN IN A GROCERY STORE PARKING LOT WHEN THE INCIDENT OCCURRED. THE CONSUMER REQUESTED TOYOTA TO TAKE POSSESSION OF THE VEHICLE AND REFUND THE FULL PURCHASE PRICE. *SCC *TR
Additional Summary:

Toyota ID No:
NHTSA ODI No: 10064188
Date of Incident: 20030606
Vehicle: 2003 TOYOTA CAMRY
Location of Incident: SOUTH JORDAN, UT
NHTSA Summary:
SUDDEN ACCELERATION CAUSED CAR TO JUMP CONCRETE CURB AND HIT A TREE. DRIVER WAS ENTERING A 90 DEGREE PARKING STALL. VEHICLE SPEED BEFORE SUDDEN ACCELERATION WAS LESS THAN TWO MILES PER HOUR (NEARLY STOPPED) *AK
Additional Summary:

Toyota ID No:
NHTSA ODI No: 10022585
Date of Incident: 20020606
Vehicle: 2002 TOYOTA HIGHLANDER
Location of Incident: HARLAN, KY
NHTSA Summary:
ENGAGED FROM PARK TO DRIVE AND SUDDENLY ACCELERATION HAPPENED, DAMAGING MANY OTHER CARS. DEALER NOTIFIED. *AK
Additional Summary:

Toyota ID No:
NHTSA ODI No: 10031275
Date of Incident: 20030617
Vehicle: 2000 LEXUS LX470
Location of Incident: WICHITA FALLS, TX
NHTSA Summary:
WHILE BACKING OUT VEHICLE STALLED, THEN JUMPED THE CURB, HITTING A TREE. DEALER STATED ACCELERATOR PEDAL GOT STUCK. *AK
Additional Summary:

Toyota ID No:
NHTSA ODI No: 10065478
Date of Incident: 20030624
Vehicle: 2003 TOYOTA CAMRY
Location of Incident: PHOENIX, MD

NHTSA Summary:
WHILE PULLING INTO A PARKING SPACE, THE VEHICLE SUDDENLY ACCELERATED AND HIT A WALL. THE CAUSE OF THE SUDDEN ACCELERATION WAS UNDETERMINED. *JB *SC *JB
Additional Summary:

Toyota ID No: 20030625023E
NHTSA ODI No:
Date of Incident: 20030625
Vehicle: 2002 TOYOTA, LEXUS CAMRY
Location of Incident: CROMONA, KY
NHTSA Summary:
*** PHONE LOG 06/25/2003 08:27:42 AM JPREBHA
CUST STS HAS 03 CAMRY & CAMRY SIGN BURNED AND VEH RPMS REV UP WITHOUT PRESSING THE ACCELERATOR. CUST STS THINKS CONCERN IS TRANSMISSION. CUST STS DLR 40 MI AWAY. CUST STS 1X AT DLR. CUST ADV THAT CAMRY SIGN WAS BURNING AND ENGINE RPM REV UP. DLR ADV TO BRING VEH BACK. 2X AT DLR. DLR DROVE VEH AND ADV TRANS FINE, & ORDERED CAMRY SIGN. CUST ADV DLR SET APPT FOR CUST TO COME BACK FOR SIGN. 3X AT DLR SIGN NOT AVAIL YET. CUST STS MUST DRIVE BACK. CUST SEEKS GAS REIMB.
*** CASE CLOSE 06/30/03 12:16:57 PM BLR14053
CR CALLED CUSTOMER 06/27/2003 3:45PM LEFT MESSAGE FOR CUSTOMER TO RETURN CALL. SHE NEVER RETURNED CALL. PER SERVICE MGR IF CUSTOMER WANTS EMPLEM REPLACED SHE HAS TO RETURN TO DLR. WILL NOT PAY GAS BILL
Additional Summary:

Toyota ID No: 20030650
NHTSA ODI No:
Date of Incident: 20030630
Vehicle: 2003 TOYOTA, LEXUS CAMRY
Location of Incident: LOUISVILLE, KY
NHTSA Summary:
*** PHONE LOG 08/18/2003 09:51:55 AM MCAPPS
ARR-03 CAMRY - CUST STS VEH IS CAUSING HER HEMRODS, BRAKES VIBRATE, ENGINE LUMBERING, CUST STS SCRAPING NOISE WHEN TURNING HARD RIGHT, LACK OF POWER. CUST STS INSIST DRIVING CAR AND WANTS TO PURSUE ARBITRATION
*** CASE CLOSE 08/19/03 08:16:23 AM CDN3
CUSTOMER WANTS TO PURSUE ARBITRATION. NCR SENDING PAPERWORK.
*** NOTES 08/19/03 08:39:54 AM CDN3
GREG KEETON, DEALER SERVICE, STATES THAT CUSTOMER HAS ONLY BEEN AT DEALERSHIP ONE TIME, ROW 817554 ON 8/18/03. CUSTOMER STATED VEHICLE LUNGED FORWARD WHILE DRIVING. DEALER TEST DROVE VEHICLE.
*** NOTES 08/19/2003 09:11:05 AM WSAMUEL5
AS REQUESTED, ARB PPWK SENT TO THIS CUSTOMER VIA USPS FIRST CLASS MAIL DATED 8/19/03.
Additional Summary:

Toyota ID No: 20030719349
NHTSA ODI No:
Date of Incident: 20010700
Vehicle: 2002 TOYOTA, LEXUS CAMRY, CAMRY SOLARA, ES300
Location of Incident: BUFORD, SC

NHTSA Summary:
*** PHONE LOG 07/29/2003 09:04:32 PM QHOLMES
----FCRP----
CUST STS VEH WAS IDLING IN PARK (304 FEDERAL ST BUFORD SC 29902-4741) & SUDDENLY ACCELERATED IN REVERSE W/DRIVERS DOOR OPEN. STS WAS NOT IN THE VEH AT TIME OF ACCIDENT. STS WAS "DRAGGED" BY DRIVERS SIDE DOOR. STS VEH RAN INTO TREE & STOPPED. STS VEH HAS NOT BEEN RPR. LEGAL REQUESTS FCRP WITH MANY INTERIOR AND EXTERIOR PHOTOS
*** NOTES 07/30/03 04:44:27 AM SET5
RCR NOTES CURRENT LOCATION OF VEHICLE (BLUFFTON, SC) IS IN SETS DISTRICT 6.
*** NOTES 07/31/03 10:31:18 AM SET5
BLUFFTON, SC APPROX 20 MILES SOUTH OF BEAUFORT, SC. CLOSEST TOYOTA DEALERSHIP IS STORER BROWN, 29504.
*** NOTES 07/31/03 10:35:35 AM SET5
RCR CALLED CUST TO ACKNOWLEDGE HER FILE/INSPECTION REQUEST. RCR REITERATED 30-DB. CUST UNDERSTOOD. CB KEYS WHEN AND WILL HOLD OFF ON REPAIRS UNTIL INSP COMPLETED. CUST REQUESTED LOANER VEHICLE. RCR ADVS. ADVD NO ASSIST. RCR ADVD CUST REGION WOULD ADVISE WHEN INSPECTION COMPLETED AND THEN WOULD REFER TO TMS LEGAL. CB WILL PURSUE LEGAL. CB HAS $500 DEDUCTIBLE FOR A RENTAL VEH. RCR ADVD WOULD DOC FILE. CUST THANKED.
*** NOTES 08/08/03 11:44:56 AM SET9
REGION FORWARDED FCR TO DOM RON GUNDERMAN FOR COMPLETION.
*** NOTES 08/04/03 01:53:04 PM SET9
CUST CALLED REGION OFFICE. CRC RE-REVIEWED CASE W/ CUST PER CUST REQUEST. CUST STS WAS NOT IN VEHICLE, STS VEH ACCEL BY ITSELF FROM PARK TO REVERSE, ACCEL AT HIGH ENOUGH SPEED TO TURN VEH AND HIT TREE. CUST STS FEELS MANUF DEFECT. SEEKS COMP FROM TOY. CUST STS SEEKS RENTAL VEH WHILE WAITING FOR INSP. CRC APOL, EXPL TOY DOES NOT AUTH RENTAL VEH DURING THIS PROCESS. EXPL COURTESY INSP. CUST CAN ADDRESS RENTAL VEH BILL AT TIME OF TMS RESPONSE TO CUST. CUST REQ ETA ON INSP.
*** NOTES 08/06/03 01:54:55 PM SET9
-CONT- CRC EXPL INSP CAN TAKE UP TO 30 DAYS. EXPL DOM RMS, MAY BE ABLE TO INSP VEH BY 8/15. NO GUARANTEES. EXPL REGION WILL PROVIDE UPDATE IF ETA CHANGES. EXPL ONCE INSP HAS BEEN COMPLETED, DOM WILL FORWARD PICS/REPORT TO TMS FOR REVIEW AND RESPONSE TO CUST. C
Additional Summary:

Toyota ID No: 20030708078E
NHTSA ODI No:
Date of Incident: 20030708
Vehicle: 2003 TOYOTA, LEXUS CAMRY, CAMRY SOLARA, ES300
Location of Incident: MAMARONECK, NY
NHTSA Summary:
*** PHONE LOG 07/08/2003 11:15:24 AM ASCHWARTZ
----FCRP----
TRAC VEH FOR DLR
REGION CONTACT TERRY AT TOYOTA CITY
DRIVER, RENTER, FRANK PARTURE 914-688-0436 & 212-642-6497
CUST STS WAS TRAVELING ON CALIFORNIA ROAD AT INTERSECTION OF MILL ROAD. CUST STS ACCELERATED TO MAKE A LEFT AT MILL RD AND CUST STRUCK VEH IN FRONT OF CUST. CUST STS THAT ACCELERATOR STUCK AND CAUSED ACCIDENT. DRIVER, WEARING SEATBELT, NO INJURIES. FRONT PASSANGER, WEARING SEATBELT, NO INJURIES. CUST PLS PRODUCT IN TO BLAME FOR ACCIDENT. LEGAL REQUEST-
*** NOTES 07/08/2003 11:15:24 AM ASCHWARTZ

>>FIELD CONTACT REPORT WITH MANY INTERIOR AND EXTERIOR PHOTOS
*** NOTES 07/09/03 05:56:58 AM NY3
CASE DISPATCHED TO HANNA DIVER.
*** NOTES 07/09/03 06:02:16 AM NY3
CLLD TERRY AT DLR TO VERIFY VEH LOCATION. VEH IS AT DLR.
*** NOTES 07/09/03 06:24:06 AM NY3
CLLD CUST AT 914-613-3636. CUST STS HE CAN ALSO BE REACHED AT HIS CEL 914-589-6275.
CUST STS HE RECEIVED A LETTER FROM CAMBRIDGE TRANSPORTATION SERVICES
STATING THAT HE HAS UNTIL JULY 23 TO LET THEM KNOW WHETHER HE WILL BE
GETTING REPRESENTATION IN INSPECTING THE VEHICLE INVOLVED IN THE ACCIDENT.
ADV CUST THAT TOYOTA FTS INSPECTION IS TAKING PLACE BECAUSE HE STS THAT VEH
ACCELERATED ON ITS OWN W/O HIM HITTING THE GAS PEDAL.
*** NOTES 07/09/03 06:26:27 AM NY3
CALLED CAMBRIDGE TRANS SERVICES AND LEFT VMAIL FOR PATRICIA WITKOWSKI AT
800-999-6222 X2192 REQ A CB FOR CLARIFICATION ON LETTER SENT TO CUSTOMER.
*** NOTES 07/10/03 12:23:48 PM NY4
CASE ASSIGNED TO FTS JS MARSNICK.
*** NOTES 07/11/03 07:56:25 AM NY3
SENT EMAIL AND LEFT VMAIL FOR MMARSNICK REQ AN INSPECTION DATE ASAP.
*** NOTES 07/11/03 09:08:21 AM NY4
RECD REQUEST FROM LEGAL DEPT. JOHN RODRICKS. HE REQUESTS A COPY OF THE FTS
FOR WHEN COMPLETED. LEFT V/C ML MSG FOR FTS JM MARSNICK TO ADVISE WHEN THE
VEHICLE WILL BE INSPECTED AND THAT A COPY OF THE REPORT IS NEEDED BY LEGAL.
AHR
*** CASE CLOSE 08/04/03 10:58:36 AM NY4
FTS M MARSNICK INSPECTED VEHICLE ON 7/21/2003.
*** NOTES 08/19/03 0

Additional Summary:

Toyota ID No:
NHTSA ODI No: 10026592
Date of Incident: 20010701
Vehicle: 2001 TOYOTA CAMRY
Location of Incident: FORT LAUDERDALE, FL
NHTSA Summary:
WHILE TRAVELING THE VEHICLE SURGED FORWARD, SUDDENLY ACCELERATED AND
CRASHED INTO A FENCE. *AK
Additional Summary:

Toyota ID No:
NHTSA ODI No: 10108181
Date of Incident: 20010701
Vehicle: 2004 LEXUS RX330
Location of Incident: WALNUT, CA
NHTSA Summary:
I AM LEASING A 2004 LEXUS RX 330 FWD WITH ABOUT 20,000 MILES ON IT. WHEN I TRY TO
APPLY THE THROTTLE AFTER SLOWING DOWN THERE IS A REVERSE HESITATION,
USUALLY FOLLOWED BY A SUDDEN SURGE IN POWER. AT TIMES THERE IS AN
ADDITIONAL HESITATION WHILE THE TRANSMISSION IS DECIDING WHAT GEAR IT
SHOULD BE IN. THIS IS ESPECIALLY NOTICEABLE WHILE MAKING A TURN AT AN
INTERSECTION, AND ESPECIALLY DANGEROUS IF THERE ARE PEDESTRIANS IN THE
INTERSECTION. I HAVE HAD IT TO THE LEASING DEALER (LONGO LEXUS) AND THEY

REPROGRAMMED THE TRANSMISSION, WHICH PROVIDED A TEMPORARY AND PARTIAL
FIX. AFTER A FEW WEEKS, APARENTLY THE TRANSMISSION REPROGRAMMED itself
AND THE PROBLEM RETURNED. I TOOK THE CAR TO A SECOND DEALER AND HE SAID
THAT THEY HAD MANY SIMILAR COMPLAINTS ABOUT THAT DRIVELINE, BUT THERE WAS
NO FACTORY FIX. I CALLED LEXUS CUSTOMER SERVICE AND THEY SAID THE SAME. THIS
PROBLEM BEGAN SHORTLY AFTER I GOT THE CAR IN APRIL 2003 AND STILL EXISTS. IF
LEXUS TRULY WANTED TO FIX THIS PROBLEM, IT WOULD HAVE ALREADY BEEN DONE.
THEY NEED A PUSH. *AK
Additional Summary:

Toyota ID No:
NHTSA ODI No: 10029426
Date of Incident: 20030706
Vehicle: 2003 TOYOTA HIGHLANDER
Location of Incident: FRISCO, TX
NHTSA Summary:
CONSUMER FEELS THAT THE LOCATION OF THE BRAKE/GAS PEDAL ARE TOO CLOSE.
THIS RESULTED IN ACCIDENTAL ACCELERATION WHILE REVERSING *AK
Additional Summary:

Toyota ID No:
NHTSA ODI No: 10045982
Date of Incident: 20030710
Vehicle: 2003 TOYOTA CAMRY
Location of Incident: WINDBER, PA
NHTSA Summary:
2003 TOYOTA CAMRY IS EQUIPPED WITH ELECTRONIC COMPUTER CONTROLLED
THROTTLE, ELECTRONIC COMPUTER CONTROLLED TRANSMISSION, AND CRUISE
CONTROL. AT VARIOUS TIMES THE CAR WILL EITHER HESITATE FOR 5-10 SECONDS WHEN
ACCELERATION IS DEMANDED OR ALTERNATIVELY UNDER LIGHT THROTTLE IT WILL
SHIFT DOWN SEVERAL GEARS THE ENGINE RACING MADLY AND ACCELERATE. IN
CRUISE CONTROL IT SOMETIMES SHIFTS DOWN AND ACCELERATES 15 MPH OVER THE
SETPOINT *AK
Additional Summary:

Toyota ID No:
NHTSA ODI No: 10026591
Date of Incident: 20030710
Vehicle: 2003 TOYOTA MATRIX
Location of Incident: HILLAND HEIGHTS, NJ
NHTSA Summary:
WHILE TRAVELING ON THE HIGHWAY AND WITHOUT PRIOR WARNING, THE VEHICLE
SUDDENLY ACCELERATED. *AK THE CONSUMER WAS UNABLE TO READ THE
DASHBOARD LIGHTS WHEN THE SUN WAS EXTREMELY BRIGHT. *TS *JB
Additional Summary:

Toyota ID No:
NHTSA ODI No: 10028357
Date of Incident: 20030711
Vehicle: 2002 TOYOTA CAMRY
Location of Incident: BRONX, NY

NHTSA Summary:
THREE TIMES CONSUMER WENT TO TOYOTA TO TELL THEM THAT SOMETHING WAS
WRONG WITH MY BRAKES. THE FIRST TIME, (MAY 1,03) WAS BRAKING SLOWLY AND 2002
CAMRY JUMPED AHEAD, THE BRAKES DID NOT WORK. THE SECOND TIME(MAY 28,0311
CONSUMER WENT IN. TOLD THEM BRAKE PEDAL WENT SLOWLY DOWN TO THE FLOOR
WHEN STOPPING FOR A LIGHT. 1999 CAMRY NEVER DID THAT. ALSO NO OHTER CAR I
RAD DID THAT. THEY TESTED, SAID NOTHING WAS WRONG. THE THIRD TIME(N JULY 3,
CONSUMER TOLD THEM, DO NOT TELL ME NOTHING WAS WRONG WITH BRAKES, I(D NOT
WANT TO HEAR IT. HE DROVE THE CAR AND SAID NOTHING WAS WRONG. NOW (IN JULY
11, 2003, WHILE PARKED AT MACY'S MALL, AT CROSS COUNTY, I AM BACKING UP SLOWLY
OUT OF MY SPACE, AND ALL OF A SUDDEN, CONSUMER'S VEHICLE JUMPED AHEAD
FLYING AND HIT TWO PARKED CARS FACING HER. ALL THE VEHICLES HAD DAMAGE.
CONSUMER WILL NEVER DRIVE THAT CAR AGAIN. COULD HAVE KILLED SOMEONE *AK
Additional Summary:

Toyota ID No:
NHTSA ODI No: 10062616
Date of Incident: 20030716
Vehicle: 2003 TOYOTA CAMRY
Location of Incident: MCCALLA, AL
NHTSA Summary:
SURGE PROBLEM. I HAVE A 2003 TOYOTA CAMRY SE. AT TIMES, WHEN I SLOW DOWN
ALMOST TO A STOP AND THEN RE-ACCELERATE MY CAR SURGES FORWARD RATHER
THAN ACCELERATING SMOOTHLY. *AK
Additional Summary:

Toyota ID No:
NHTSA ODI No: 10063727
Date of Incident: 20030717
Vehicle: 2003 LEXUS ES300
Location of Incident: MIAMI, FL
NHTSA Summary:
WHILE PARKING CONSUMER DEPRESSED THE BRAKE PEDAL AND VEHICLE LURCHED
FORWARD, HITTING A BUILDING. THE FRONT OF THE VEHICLE WAS DAMAGED.
VEHICLE WAS TAKEN TO THE DEALER, WHO COULD NOT DETERMINE THE CAUSE OF THE
PROBLEM. *AK
Additional Summary:

Toyota ID No:
NHTSA ODI No: 10119997
Date of Incident: 20030731
Vehicle: 2001 TOYOTA PRIUS
Location of Incident: SAN DIEGO, CA
NHTSA Summary:
A READER OF THE SAN DIEGO UNION-TRIB WHEELS SECTION RESPONDED TO AN ARTICLE
REGARDING UNEXPECTED ACCELERATION FROM ELECTRONIC THROTTLES AND THE
EDITOR FORWARDED THE LETTER TO NHTSA.***NO ANSWER REQUIRED*** *MR. WHILE
PARKING IN A DIAGONAL PARKING SPACE THE CONSUMER'S VEHICLE ACCELERATED
SUDDENLY ACROSS A SIDEWALK AND HIT AN ELECTRIC BOX. THIS SUDDEN
ACCELERATION PROBLEM HAPPENED AGAIN WHILE THE CONSUMER WAS PARKING.
THAT TIME NOT ACCIDENT OCCURRED. *BF *NM
Additional Summary:

Toyota ID No:
NHTSA ODI No: 10031644
Date of Incident: 20030730
Vehicle: 2003 TOYOTA 4RUNNER
Location of Incident: SCOTCH PLAINS, NJ
NHTSA Summary:
WHILE TRAVELING ON THE HIGHWAY WITHOUT PRIOR WARNING. THE VEHICLE WILL
SUDDENLY ACCELERATED. PLEASE FILL IN ADDITIONAL INFORMATION DEALER IS
AWARE OF THE PROBLEM.
Additional Summary:

Toyota ID No: 20030929064
NHTSA ODI No:
Date of Incident: 19030800
Vehicle: 2003 TOYOTA LEXUS CAMRY
Location of Incident: OAKLAND GARDENS, NY
NHTSA Summary:
*** PHONE LOG 10/28/2003 10:23:47 AM SCAMP08
>>>FA>>>CUST STS OWNS 03 CAMRY STS HAVE BEEN HAVING TRANS SINCE VEH WAS
FIRST PURCH. STS TOOK VEH TO DLR FOR INSPECTION. STS DLR ADJUSTED TRANS &
SINCE STILL PERSIST. STS DLR HAD TOY REP TEST DRIVE VEH. WHO ADV NORMAL FOR
VEH. STS VEH THIS IS NOT NORMAL CONDITION FOR VEH. STS VEH SURGES FOWARD IN
SLOW TRAFFIC. STS ALSO BRAKE PEDAL IS SOFT & SINKS DOWN. STS DLR ADV WOULD
REPLACED MASTER CYLINDER. >>>
*** NOTES 08/25/2003 10:23:47 AM SCAMP08
>>>LATER FOUND OUT MASTER CYLINDER WAS NOT REPLACED. STS DLR RESURFACED
ROTORS & REPLACED BRAKES. STS STILL HAS SOFT BRAKES ISSUE. STS WOULD ALSO
LIKE TO HAVE MASTER CYLINDER REPLACED.
*** NOTES 09/02/03 04:11:24 PM NY3
CASE DISPATCHED TO OSPM. J PETILLI AND CC FTS J MIH.

*** CASE CLOSE 09/02/03 10:56:37 AM NY5
ESPM TO MEET W/CUST ON 9/23/03 AT 10AM AT PENN TOYOTA
*** NOTES 09/30/03 08:06:17 PM NY3
ESPM PETILLI TEST DROVE VEH W/ CUST AND VEH OPER AS DESIGNED. CUST STS VER
CONCERNED ABOUT CONCERN. ESPM AUTH THE TRANS REPLACED.
Additional Summary:

Toyota ID No: 20030871199
NHTSA ODI No:
Date of Incident: 20030800
Vehicle: 2003 TOYOTA LEXUS CAMRY, CAMRY SOLARA, ES300
Location of Incident: SILVER SPRING, MD
NHTSA Summary:
*** PHONE LOG 08/27/2003 04:07:07 PM AHEYDON
FA- NO PREVIOUS FILES CUST STS HE IS HAVING CONCERNS WITH VEH, CUST STS VEH IS
ACCELERATING AT INFREQUENT INTERVALS. CUST STS WHEN YOU TAKE FOOT OFF OF
ACCELERATOR, VEH STAYS AT SAME SPEED AND THEN DECELERATES. CUST STS DLR
HAS INSPECTED VEH AND DLR UNABLE TO DUPLICATE. CUST STS HE HAS TAKEN VEH TO
DLR 10XS. CUST STS INTERIOR ON DRIVER'S SIDE THERE IS A PIECE OF PLASTIC THAT IS
MISSING. CUST STS MOTOR WAS ROTURNED DIRTY.

*** NOTES 08/27/2003 04:07:07 PM AHEYDON
CUST STS THE 3RD TIME AT DLR HE HAD TO WAIT 6 HOURS FOR REPS AND VEH WAS RETURNED DIRTY. CUST STS HE SPOKE TO RICHARD AT DLR AND HE ADV THAT HE DOES NOT GIVE ANYTHING OUT TO COVER ERRORS. CUST STS JEREMY AT DLR ADV HE DOES NOT WANT TO CLEAN VEH ANY LONGER. CUST STS HE WAS ALSO SOLD A DEMO AND NOT A RP AND NEW VEH. CUST STS NO ONE AT DLR KNEW OF RAM FOR PRESIDENT OR NAME OF PRESIDENT OF TOYO. CUST STS HE DOES NOT WANT TO DEAL WITH DLR ANY LONGER.
*** NOTES 08/29/03 11:51:23 AM CATS
ATTEMPTED TO CONTACT CUSTOMER. LEFT MSG WITH FEMALE AT NUMBER FOR RETURN CALL TO DISCUSS CONCERNS.
*** NOTES 08/29/2003 02:22:27 PM TCMATTERAFINYC
LEMON LAW CASE CREATED 8/29. CASE # 200308291126.
*** NOTES 09/02/2003 01:03:47 PM ECAMPO8
CUST CB STS SKS TO SPEAK TO AHEYDON. NCR ADV AHEYDON IS NOT AVAIL. CUST STS VEH IS UNSAFE & WOULD LIKE TO HAVE ISS RESOLVED AS SOON AS POSSIBLE. NCR APOL & ADV WILL CONTACT REGION & CB. NCR CONTACTED CATS DEBBIE SIMONS WHO ADV CONTACTED CUST & IS TRYING TO SCHEDULE DSPM MEETING. STS WILL CONTACT CUST WHEN TIME & DATE IS SET. NCR ADV WILL CONTAC CUST & ADV ACCORDINGLY. NCR CONTACTED CUST & ADV MEETING IS BEING SCHEDULED W/ DSPM. >>>
*** NOTES 09/02/2003 01:10:04 PM ECAMPO8
>>>OUTGOING CALL<<<NCR CONTACT CUST & ADV MEETING IS BEING SET UP BY REGION REP DEBBIE SIMONS. NCR ADV CUST WILL BE CONTACTED WHEN MEETING TIME & DATE HAS BEEN SET. CUST STS DOES NOT WANT TO MEET @ DLR. STS WOULD LIKE TO NOTE THAT MEETING SHOULD HAPPEN SOON B/C VEH IS NOT S

Additional Summary:

Toyota ID No: 200308120229
NHTSA ODI No:
Date of Incident: 20010000
Vehicle: 2001 TOYOTA, LEXUS ES300
Location of Incident: KENNESAW, GA
NHTSA Summary:
*** PHONE LOG 08/13/2003 08:09:51 AM AWU1 WRITTEN DISPATCHED- 8/13/03. ES 300 28 2ND LEXUS CUST PURCH FROM NALLEY LEXUS IN MARIETTA DURING PAST 2YRS. FIRST PURCH A NEW '01 ES 300. DURING LANE CHANGES (ACCELERATING OR DECELERATING TRANS SHIFTS FREQ RESULT IN AN UNNERVING JERKING. ON ATLANTA FREEWAYS THIS IS ESPECIALLY FRIGHTENING WHEN VEH SURGES OR HESITATES UNEXPECTEDLY. OTHER PROBLEM, PERHAPS RELATED WHEN VEH IS AT REST, NO REASON, VEH WILL SUDDENLY SURGE FWD. MORE THAN ONCE, JOLT CAUSED CUST TO LOOK TO HER *** NOTES 08/13/2003 09:01:13 AM AWU1 REAR, THINKING CUST HAS BEEN REAR-ENDED. BOTH SITUATIONS ARE SO UNSETTLING THAT CUST NOW FEAR FOR CUSTS SAFETY WHEN DRIVING VEH. CUST BECAME AWARE OF ISSUES SHORTLY AFTER PURCH VEH. SEVERAL FRIENDS COMMENTED ON JERKING WHEN RDE. THEY RADE VEH. *** COMMIT 08/13/2003 09:01:37 AM AWU1 ACTION TYPE: CUSTOMER *** FULFILL 08/13/2003 09:04:34 AM AWU1 ACTION TYPE: CUSTOMER *** PHONE LOG 08/13/2003 09:06:09 AM AWU1 ACTION TYPE: OUTGOING CALL SPOKE W/CUST, THANKED CUST FOR COMMENTS. ADV WILL DOC. ADV CUST WE DO HAVE A RESOLVE FOR THE DRIVING RESPONSE AND CUST WOULD JUST NEED TO SCHED APPT W/SVC DEPT AT THEIR EARLIEST CONVENIENCE FOR DLR TO ADDRESS CUST'S ISSUE. CUST STS THEY HAVE ALREADY CONTACTED DLR SVC DEPT AND DOES NOT REQ FURTHER ASSTNC FROM LCS. CUST SATIS. CUST STS IF THEY NEED ADDTL ASSTNC FROM LCS, THEY WILL CALL LCS. *** CASE CLOSE 08/13/2003 09:06:54 AM AWU1 CUST HAS ALREADY CONTACTED DLR SVC DEPT TO ADDRESS AUTO TRANS ISSUE. CUST SATIS AND DOES NOT REQ FURTHER ASSTNC FROM LCS. CUST APPRECIATES FOLLOW CALL FROM LCS.

Additional Summary:

Toyota ID No: 10032155
NHTSA ODI No: 20020801
Vehicle: 2004 TOYOTA COROLLA
Location of Incident: CANYON COUNTRY, CA
NHTSA Summary:
CONSUMER STATES THAT BRAKE PEDAL WAS TOO CLOSE TO THE GAS PEDAL. WHEN THE BRAKES WERE DEPRESSED THE CONSUMER'S FOOT ALSO PRESSED THE GAS PEDAL WHICH ALMOST CAUSED AN ACCIDENT. *AK (SHAWN T. HEBLEY 08/26/03) *SCC *JB
Additional Summary:

Toyota ID No: 10061543
NHTSA ODI No: 20030820
Vehicle: 2000 TOYOTA CAMRY
Location of Incident: CONCORD, CA
NHTSA Summary:
VEHICLE EXPERIENCED SUDDEN ACCELERATION UPON PULLING INTO A SPACE IN AN OPEN PARKING LOT. THIS RESULTED IN VEHICLE JUMPING THE CURB, GOING THROUGH GRASS, OVER THE MEDIUM, AND LANDING ON A PARKED VEHICLE ON THE LOWER LEVEL. DEALERSHIP PERFORMED A DIAGNOSTIC TEST, BUT NO FAILURE CODE WAS FOUND. *AK THE CONSUMER PULLED INTO THE PARKING SPACE, THE VEHICLE DID NOT MOVE FORWARD, THE CONSUMER LIGHTLY PLACED HER FOOT ON THE GAS AND THE VEHICLE LUNGED FORWARD. *SC *JB
Additional Summary:

Toyota ID No: 10090361
NHTSA ODI No: 20030920
Vehicle: 2003 TOYOTA COROLLA
Location of Incident: THOUSAND OAKS, CA
NHTSA Summary:
WHILE APPLYING THE ACCELERATOR PEDAL VEHICLE FAILED TO ACCELERATE. CONSUMER APPLIED THE BRAKE PEDAL AND THE VEHICLE ACCELERATED UNCONTROLLARLY. VEHICLE WAS TAKEN TO THE DEALER FOR INSPECTION, AND MECHANIC DETERMINED THAT THE TRANSMISSION FLUID NEEDED TO BE REPLACED, AND REPLACED IT. HOWEVER, THE PROBLEM RETURNED, AND THE VEHICLE WAS TAKEN BACK TO THE DEALER. HOWEVER, MECHANIC COULD NOT DUPLICATE THE PROBLEM. *AK
Additional Summary:

Toyota ID No: 10037780
NHTSA ODI No: 20030829
Vehicle: 2002 TOYOTA SEQUOIA
Location of Incident: NEWARK, DE
NHTSA Summary:
WHILE DRIVING AT 20 MPH AND WITH NO WARNING VEHICLE ACCELERATED, AND CAUSED THE CONSUMER TO LOSE CONTROL OF VEHICLE, AS A RESULT THE VEHICLE

TRAVELED INTO A YARD AND HIT A TREE BEFORE IT STOPPED. *AK THE ENGINE WAS LEFT RUNNING. THE VEHICLE WAS IN THE PARK POSITION. *SCC
Additional Summary:

Toyota ID No:
NHTSA ODI No: 10096252
Date of Incident: 20030825
Vehicle: 2003 TOYOTA AVALON
Location of Incident: GOODE, VA
NHTSA Summary:
WHEN DRIVING AND APPLYING BRAKES ENGINE WOULD START TO REV. THIS WOULD CAUSE A HESITATION IN THE VEHICLE WHEN THE ACCELERATOR WAS DEPRESSED. HAD TAKEN TO DEALER AND THE PROBLEM HAD NOT BEEN RESOLVED.*AK
Additional Summary:

Toyota ID No:
NHTSA ODI No: 10042176
Date of Incident: 20020826
Vehicle: 2002 TOYOTA HIGHLANDER
Location of Incident: GREENVILLE, SC
NHTSA Summary:
DRIVER MADE A LEFT TURN WITH FOOT ON BRAKE PEDAL AND ROLLED INTO A PARKING SPOT WITHIN A PARKING LOT, ESTIMATED SPEED TO BE 2 MPH. THE ENGINE SURGED AND THE CAR RAN OVER A SMALL TREE, WENT UP AN INCLINE APPROXIMATELY 2 FT. HIGHER THAN THE PARKING LOT, THEN PROCEEDED APPROXIMATELY 8 FEET INTO THE ADJACENT PROPERTY THEN STRUCK THE BRICK CHIMNEY OF A HOUSE AND BOUNCED BACK INTO THE PARKING LOT. THE BRAKES WERE DEPRESSED DURING THIS OCCURRENCE BUT DID NOT STOP THE CAR.
Additional Summary:

Toyota ID No:
NHTSA ODI No: 10095511
Date of Incident: 20030817
Vehicle: 2003 TOYOTA CAMRY
Location of Incident: GREENWICH, CT
NHTSA Summary:
2003 TOYOTA CAMRY XLE WHILE STOPPED WITH FOOT ON THE BRAKE IN A LINE OF CARS WAITING FOR THE TRAFFIC LIGHT TO TURN GREEN. CAR SUDDENLY ACCELERATED AND CRASHED INTO THE REAR OF THE CAR IN FRONT CAUSING SIGNIFICANT FRONT END DAMAGE TO OUR CAR. AGAIN, THE DRIVERS FOOT WAS ON THE BRAKE. THE FLOOR MAT (1) WAS ALL THE WAY BACK AGAINST BASE OF THE SEATS AND NOT IN THE AREA OF THE ACCELERATOR PEDAL AND (2) THE MAT IS BY DESIGN, CUT BACK 3 TO 4 INCHES SHORT OF THE CARPETED AREA UNDER, NEAR AND AROUND THE ACCELERATOR PEDAL, AND (3) THE BASE AND REAR OF THE ACCELERATOR PEDAL ARE SUSPENDED 2 1/2 TO 3 INCHES AWAY FROM THE CARPETED FLOOR AND IT IS VERY DIFFICULT TO PRESS THE ACCELERATOR TO A POSITION CLOSE TO THE FLOOR--AND IT DEFINITELY BEYOND THE PEDAL TRAVEL DISTANCE THAT DRIVERS WOULD NOT COULD PRESS ON THE ACCELERATOR PEDAL. PROBLEM WAS REPORTED TO TOYOTA DEALER SERVICE ASSOCIATE WHO SAID "NO PROBLEM FOUND." PROBLEM CONTINUES TO OCCUR PERIODICALLY, BUT WE NOW KNOW TO PRESS DOWN HARDER THAN NORMAL WHEN STOPPED AT TRAFFIC LIGHTS AND IN STOP AND GO TRAFFIC. (WE ALSO NOTED A SIMILAR PROBLEM WITH OUR 2006 TOYOTA CAMRY XLE--BUT THE PROBLEM HAPPENS WHEN CAR IS IN REVERSE. WHEN

STARTING UP IN THE MORNING AND BACKING OUT OF THE GARAGE WITH FOOT COVERING THE BRAKE (AND NOT ON THE ACCELERATOR PEDAL), THE ENGINE RPMS SUDDENLY ACCELERATE AND IF YOU AREN'T AWARE OF THE PROBLEM AND DON'T HAVE YOUR FOOT ON THE BRAKE, THE CAR CAN SPEED UP SIGNIFICANTLY AND GO OUT OF CONTROL. THIS PROBLEM WAS ALSO REPORTED TO TOYOTA DEALER SERVICE ASSOCIATE WHO ALSO SAID: "NO PROBLEM FOUND."] *TR
Additional Summary:

Toyota ID No:
NHTSA ODI No: 10028103
Date of Incident: 20030820
Vehicle: 2002 TOYOTA CAMRY
Location of Incident: NOLES, IL
NHTSA Summary:
THE VEHICLE WAS BEING RE-PARKED, PARALLEL TO THE CURB. WITH THE DRIVERS FOOT ON THE BRAKE, SHIFTED FROM PARK TO DRIVE AND THE VEHICLE ACCELERATED FORWARD, THROUGHOUT THE INTERSECTION, OVER A CURB INCREASING IN SPEED. THE AIR BAGS DID NOT DEPLOY. THE DRIVER ATTEMPTED TO BRAKE, BUT THE VEHICLE DID NOT RESPOND. THE VEHICLE WAS TOTALED. *AK *SCC
Additional Summary:

Toyota ID No: 200309291209
NHTSA ODI No:
Date of Incident: 20030900
Vehicle: 2001 TOYOTA, LEXUS CAMRY, CAMRY SOLARA, ES300
Location of Incident: FAIR LAWN, NJ
NHTSA Summary:
*** PHONE LOG 09/29/2003 01:42:21 PM GRADLSTFCH
>>>CB>>>
CUST STS WAS ON HER WAY TO WORK AND SHE WAS PULLING INTO PARKING SPACE WHILE BRAKING AND ALL OF SUDDEN MADE A GRINDING NOISE AND ACCELERATED ON ITS OWN AND CRASHED INTO HOUSE NEXT STORE AND MADE A HOLE INTO THE HOUSE. CUST STS WALL WAS CEMENT. CUST STS AIRBAGS DID NOT DEPLOY, AND FLS THEY SHOULD OFF. CUST SKS INSPECTION ONLY. FLS MANU DEFECT. LEGAL REQUEST FORP WITH MANY INTERIOR AND EXTERIOR PHOTOS.
*** NOTES 09/30/03 07:14:42 PM NY5
CASE DISPATCHED TO HOVER.
*** NOTES 10/01/03 06:28:52 AM NY4
CASE ASSIGNED TO FT8-M MARSNICK.
*** NOTES 10/07/03 01:36:33 PM NY2
VEH LOCATED AT MAIN AUTO BODY 973-340-9484 , 650 OUTWATER LANE LODI, NJ 07644
*** NOTES 10/07/03 01:46:05 PM NY5
LEFT VMAIL FOR FT8 MMARSNICK REQ DATE FOR INSPECTION.

*** CASE CLOSE 10/17/03 11:39:14 AM NY4
FT8 M MARSNICK INSPECTED VEHICLE ON 10/08/2003.
Additional Summary:

Toyota ID No: 200310081163
NHTSA ODI No:
Date of Incident: 20030900
Vehicle: 2002 TOYOTA, LEXUS CAMRY, CAMRY SOLARA, ES300

Location of Incident: PRAIRIE VILLAGE, KS
NHTSA Summary:
*** PHONE LOG 10/31/2003 02:20:29 PM PROCATO CUST CALLING ABOUT THE OSP B/C SHE STS HAD AN EXPERIENCE WHERE SHE NOTICED THE VEH LURCHING AND WHEN SHE WENT TO A MALL IT JUMPED UP OVER THE CURB AND SHE ALMOST DROVE INTO THE BUILDING. SHE WANTED TO KNOW IF THE OSP ADDRESSED THAT AND SHE WANTED TO KNOW IF SHE SHOULD HAVE THE VEH CHECKED. *** CASE CLOSE 10/31/2003 02:31:19 PM PROCATO CUST STATES W/LCR DOC HER CONCERNS.
Additional Summary:

Toyota ID No: 2005090403109
NHTSA ODI No: 10010900
Date of Incident: 20010900
Vehicle: 2000 TOYOTA, LEXUS CAMRY, CAMRY SOLARA ES300
Location of Incident: SNYDER, NY
NHTSA Summary:
*** PHONE LOG 09/04/2003 11:08:28 AM MBATIE
CUST STS ESP CONCERNS WEH WHEN BREAKING GOING DOWNHILL, ENGINE RPM REV TO HIGH RNE, AND THEN BRAKES OPERATE. CUST STS VEH INTO DLR 2X AND A TOTAL 27 DAYS. DLR ADV NOT ABLE TO DUPLICATE CONDITION. CUST STS VEH TO DLR 21 DATS DURING DAST INSPECTION WHILE CUST DROVE RENTAL. CUST STS DLR STILL UNABLE TO DUPLICATED CONCERNS. CUST STS PICKED VEH UP AFTER 21 DAYS AND FOUND BUFFALO HILLS TRAINING PARKING AND ADMISSION PASS. CUST FLS THAT VEH SHOULD NOT BE TAKEN FOR:~~~
*** NOTES 09/04/2003 11:08:28 AM MBATIE
RECREATIONAL PURPOSES. CUST CONTACTED DLR SERV MNG BRIAN ADV MIKE WAS TEST-DRIVING TO ATTEMPT DUPLICATION AND BRIAN PROVIDED ROUTE TAKEN TO TRAINING CAMP. CUST STS THAT ROUTE DLR MIKE DROVE VEH TO TRAINING CAMP WAS ON FREEWAY AND NOT ON HILLS. CUST SPECIFICALLY ADV DLR THAT CONDITION ONLY OCCURS ON HILLS. CUST FLS VERY UPSET THAT CUST WILL PAYING LEASE PAYMENTS FOR VEH THAT CUST IS UNABLE TO DRIVE B/C DLR CANT RPR CORRECTLY OR DUPLICATE CONCERN. NCR APOL ADV DLR~~
*** NOTES 09/04/2003 11:08:32 AM MBATIE
OPEN TO CRM FOR ASSIST IN FINDING HIGH RPM IN TIMELY FASHION. NOTE TO DLR: POSSIBLE NEED FOR REGION INVOLVEMENT. NCR ADV CUST WOULD RCV F/U BY END OF BUS 9/30/03 AND FOU CASE #.

*** CASE CLOSE 09/30/03 09:37:27 AM DLR21068
CUSTOMER STATES THAT ENGINE RPMS INCREASE WHEN BREAKING.....WE HAVE NEVER DUPLICATED HER COMPLAINT AND AT LAST VISIT WE KEPT CAR AND DROVE IT 720 MILES.....TECH FIELD REP FROM TOYOTA CHECKED OUT AND DROVE (MIKE SKIBIA) AND COULD NOT DUPLICATE.....WE GAVE VEH BACK TO CUSTOMER.....CANNOT DUPLICATE.
*** NOTES 09/15/2003 11:11:49 AM TOHERA
CUST CB AND STS HAS NOT HEARD BACK FROM DLR. NCR APOL AND ADV CUST FOR NOTES THAT STS WAS INVOLVED AND WAS NOT ABLE TO DUPLICATE CONCERN SO NO REPAIRS WILL TAKE PLACE. CUST STS WOULD LIKE TO HAVE REPAIRS DONE AND TO KNOW WHY DLR DROVE VEH ON FREEWAY TO BUFFALO HILLS TRAINING CAMP WHEN CONDITION HAPPEN WHILE BRAKING ON SURFACE STREETS. NCR ADV CU
Additional Summary:

Toyota ID No:
NHTSA ODI No: 10010021

Date of Incident: 20030903
Vehicle: 2001 TOYOTA COROLLA
Location of Incident: RACINE, WI
NHTSA Summary:
WHILE DRIVING FOR A WHILE AND WHEN VEHICLE FULLY STOPPED IT EXPERIENCED INTERMITTENTLY ACCELERATOR PEDAL STICKING IN THE IDLE POSITION. DEALER INSPECTED VEHICLE THREE TIMES AND COULD NOT DUPLICATE OR CORRECT THE PROBLEM. *AK, *SCC
Additional Summary:

Toyota ID No:
NHTSA ODI No: 10043952
Date of Incident: 20030903
Vehicle: 2001 TOYOTA CAMRY
Location of Incident: SOLON, OH
NHTSA Summary:
WHILE PULLING INTO A PARKING SPACE THE VEHICLE SUDDENLY ACCELERATED AND HIT THE CEMENT BLOCK IN THE PARKING SPACE. *AK, *NM
Additional Summary:

Toyota ID No:
NHTSA ODI No: 10072605
Date of Incident: 20030904
Vehicle: 2002 TOYOTA CAMRY
Location of Incident: BOSTON, MA
NHTSA Summary:
MARIA CAPALA, DRIVING HER 2002 TOYOTA CAMRY, VIN 4T1BE32K02U936869, WAS ENTERING I-93 AT EXIT 39 AT 7:30 IN THE MORNING WHEN HER CAR SUDDENLY SHOT ACROSS THREE LANES OF TRAVEL AND WAS HIT, BROAD SIDE, BY ANOTHER VEHICLE TRAVELING IN THE HIGH SPEED (3RD) LANE. TRAFFIC AT THE TIME OF THE ACCIDENT WAS LIGHT. IT IS BELIEVED THAT THE CAMRY EXPERIENCED AN UN-COMMANDED ACCELERATION CAUSING MRS. CAPALA TO LOSE CONTROL RESULTING IN THE ACCIDENT AND HER DEATH. THE CAMRY HAS BEEN STORED SINCE THE ACCIDENT AND NO CHANGES HAVE BEEN MADE TO ITS POST ACCIDENT CONDITION. VEHICLE IS AVAILABLE FOR INSPECTION/TESTING BY NHTSA. *AK
Additional Summary:

Toyota ID No:
NHTSA ODI No: 10097542
Date of Incident: 20030907
Vehicle: 2002 LEXUS ES300
Location of Incident: RALEIGH, NC
NHTSA Summary:
I WAS DRIVING AT ABOUT 55 MPH ON HIGHWAY. WHEN THE TRAFFIC SLOWED DOWN, I APPLIED THE BRAKE TO BRING DOWN THE SPEED OF THE CAR TO ABOUT 3-7 MPH. AFTER FOLLOWING THE CAR IN FRONT OF ME FOR ABOUT 5 SECONDS AT ABOUT 3-4 CAR DISTANCE, I SAW THE CAR IN FRONT OF ME SPEEDED UP SLOWLY AND I DECIDED TO FOLLOW UP BY PRESSING THE ACCELERATOR MODERATELY. THE CAR FIRST SHUDDERED, THEN PAUSED FOR ABOUT 1 SECOND, AND FINALLY ACCELERATED AT ALMOST MAXIMUM POWER. THIS WAS A NEAR MISS. BEFORE THIS HAPPENED, I BROUGHT OUR CAR TO LEXUS DEALER TO COMPLAIN ABOUT SHUDDERING PASSING WHEN ACCELERATING FROM LOW SPEED AFTER THE CAR WAS UPDATED WITH TSB-TC004-03.

THE CHIEF TECHNICIAN DROVE THE CAR AND REPRODUCED THE KIND OF PROBLEMS THAT WE HAD. HOWEVER, HE SAID THAT HE COULD NOT DO ANYTHING ABOUT IT AND WAS GOING TO WRITE A REPORT TO TOYOTA CORP BECAUSE IT WAS A SOFTWARE PROBLEM. ON THE OTHER HAND, THE RECEIPT FROM THE DEALER SAID THAT THEY DID NOT FIND ANY ABNORMAL TRANSMISSION SHIFT DURING TEST DRIVING, BUT WOULD FILE A REPORT. WHAT A CONTRADICATION! THE DANGER OF THIS TRANSMISSION PROBLEM WAS FURTHER MAGNIFIED BY THE FACT THAT 2002 ES300 RUNS VERY SMOOTHLY AT MOST TIMES (~99%). THIS SHUDDER/PAUSE/ACCELERATION OR PAUSE/ACCELERATION THAT ONLY OCCURS SPORADICALLY UNDER VERY SPECIAL CONDITIONS GIVES DRIVERS SURPRISE THAT IS THE LAST THING THEY WANT DURING DRIVING. FOR CURIOSITY, I TESTED DRIVING THE CAR FOR ABOUT 55 MINUTES BY REPEATLY SLOWING DOWN TO ABOUT 5 - 10 MPH BY APPLYING BRAKE, THEN ALLOWING THE CAR TO ROLL FOR ABOUT 3 SECONDS WITHOUT PRESSING GAS PADDLE, AND THEN ACCELERATING MODERATELY TO ABOUT 20 - 30 MPH. THE PROBABILITY FOR THE SHUDDER/PAUSE/ACCELERATION IS ABOUT 5%, WHILE THE PROBABILITY FOR PAUSE/ACCELERATION ABOUT 25%. IT SEEMED THAT THIS PROBLEM HAPPENEDD MORE OFTEN ON DOWN-UP HILL. *AK

Toyota ID No:
NHTSA ODI No: 10081145
Date of Incident: 20010906
Vehicle: 2000 TOYOTA MATRIX
Location of Incident: FRANKLIN, TN
NHTSA Summary:
I TOOK THE MATRIX IN TWICE RECENTLY AFTER I BOUGHT IT BECAUSE THE CAR WOULD UNEXPECTEDLY LUNGE FORWARD WHILE AT A COMPLETE STOP. I ALSO COMPLAINED THAT THE BRAKES FELT "LOOSE" AND DID NOT "CATCH" AS THEY SHOULD. I WAS ADVISED BOTH TIMES BY THE SERVICE MANAGER THAT THEY COULD NOT DUPLICATE THE PROBLEM AND THAT NOTHING ABNORMAL WAS FOUND WITH CAR. WHILE I WAS BEGINNING TO LOOK INTO "LEMON LAWS", IN SEPTEMBER OF LAST YEAR I WAS AT A STOP LIGHT WITH THE BRAKE PEDAL FULLY ENGAGED, BUT TO MY PRIVIOUS EXPERIENCES WITH THE CAR LUNGING FORWARD, I WOULD KEEP SEVERAL FEET BETWEEN ME AND THE CAR IN FRONT OF ME TO AVOID AN ACCIDENT. THIS TIME THE CAR NOT ONLY LUNGED FORWARD, BUT IT WAS LIKE THE ACCELERATOR STUCK AND I HAD MY FOOT ON THE BRAKE BUT COULD NOT STOP THE CAR AFTER IT LUNGED FORWARD AND I HIT A CAR THAT WAS IN FRONT OF ME AT THE LIGHT. MY CAR DID NOT STOP UNTIL I WAS ALMOST PARALLEL WITH THE OTHER CAR ON THE PASSENGER SIDE. I HAVE HAD THE CASE LOOKED AT BY TOYOTA, AND THEIR LEGAL DEPARTMENT HAS ADVISED THAT NOTHING IS WRONG WITH THE CAR-THEIR ONLY EXPLANATION IS THAT THE VEHICLE OPERATES TO "NORMAL" SPECIFICATIONS. THEY HAVE ADVISED THAT THE CAR WILL LUNGE FORWARD WHILE THE AIR CONDITIONER IS ON WHEN THE AC COMPRESSOR CYCLES. IT INCREASES THE ENGINE RPM AND THE VEHICLE WILL MOVE FORWARD. MY AIR CONDITIONER WAS NOT ON AT THE TIME OF THIS ACCIDENT, HOWEVER. *LA
Additional Summary:

Toyota ID No:
NHTSA ODI No: 10062033
Date of Incident: 20030910
Vehicle: 2003 TOYOTA CAMRY
Location of Incident: BLYTHEVILLE, AR
NHTSA Summary:

2000 TOYOTA CAMRY ACCELERATED AS I PULLED IN DRIVEWAY, CAUSING DAMAGE TO MY VEHICLE, MY SON-IN-LAW'S VEHICLE, MINOR DAMAGE TO HOUSE & BASKETBALL GOAL. *AK
Additional Summary:

Toyota ID No:
NHTSA ODI No: 10050933
Date of Incident: 20020910
Vehicle: 2002 LEXUS ES300
Location of Incident: SAN ANTONIO, TX
NHTSA Summary:
WAS DRIVING TO CALIFORNIA IN MY 2002 LEXUS ES300 LAST SEPTEMBER AND WAS ADJUSTING THE CRUISE CONTROL WHEN SUDDENLY IT ACCELERATED AS IF I HAD FLOORED THE GAS PEDAL. INCIDENT DID NOT RESULT IN AN ACCIDENT. NO PROBLEMS SINCE THEN BUT DECIDED TO REPORT IT AS I READ AN ARTICLE IN THE NEWSPAPER TODAY THAT YOU WERE INVESTIGATING UNEXPECTED ACCELERATIONS FOR THIS CAR.
Additional Summary:

Toyota ID No:
NHTSA ODI No: 10040983
Date of Incident: 20030910
Vehicle: 2001 LEXUS ES300
Location of Incident: MIAMI, FL
NHTSA Summary:
AFTER STARTING VEHICLE CONSUMER WOULD PRESS ON THE ACCELERATOR PEDAL AND VEHICLE WOULD HESITATE BEFORE MOVING. CAUSE HAS YET TO BE DETERMINED. *AK
Additional Summary:

Toyota ID No:
NHTSA ODI No: 10067151
Date of Incident: 20030915
Vehicle: 2001 LEXUS ES300
Location of Incident: LOUISVILLE, KY
NHTSA Summary:
UPON STOPPING, AND WHEN CONSUMER REMOVED FOOT FROM THE GAS PEDAL VEHICLE SURGED FORWARD BEFORE THE BRAKE PEDAL WAS DEPRESSED. THIS OCCURRED NUMEROUS TIMES. ONCE, RESULTING IN CONSUMER'S VEHICLE CRASHING INTO A CONCRETE POLE WHILE PULLING INTO A PARKING LOT. ALSO, STARTING AT 5000 MILES BATTERY HAD TO BE REPLACED 3 TIMES BECAUSE IT DIED. THIS WAS DUE TO AN ELECTRICAL SHORT. *AK, *LA
Additional Summary:

Toyota ID No:
NHTSA ODI No: 10107816
Date of Incident: 20030929
Vehicle: 2004 LEXUS ES330
Location of Incident: PLANTATION, FL
NHTSA Summary:
I HAVE COMPLAINED NUMEROUS TIMES AND HAVE WRITTEN A LETTER TO DENNY CLEMENTS, GROUP VP OF LEXUS INFORMING HEM OF MY SAFETY CONCERNS RELATED TO

THE 2004 ES330. HIS OFFICE ATTEMPTED TO APPEASE ME BY OFFERING TO SEND ME 2 FREE OIL CHANGE COUPONS OR $1,000 OFF MY NEXT PURCHASE OR LEASE OF A LEXUS VEHICLE. THE VEHICLE HAS SERIOUS HESITATION ISSUES WHEN ATTEMPTING TO ACCELERATE. I HAVE SPOKEN TO EVERYONE AT THE DEALER, INCLUDING THE SERVICE MANAGER (WHO ADMITTED THE ISSUE, BUT HAD NO SOLUTION) AND GENERAL MANAGER. THE ISSUE HAS NOT BEEN RESOLVED. *NM
Additional Summary:

Toyota ID No: 20091916021 9
NHTSA ODI No: 20051900
Date of Incident: 20051000
Vehicle: 2003 TOYOTA, LEXUS CAMRY, CAMRY SOLARA, ES300
Location of Incident: CHICAGO, IL
NHTSA Summary:
*** PHONE LOG 10/16/2003 08:59:10 AM ESMART
CUST STS VEH WAS SURGING FORWARD, ENGINE WAS RACING. CUST STS TOOK VEH TO DLR.WHO HAS HAD VEH FOR 2 DAYS, STILL HAS NOT BEGUN REPS. CUST DISSATISFIED WITH VEH COND, FLS IS DANGEROUS AND HLS TOY WILL NOT BE ABLE TO PERM RPR. CUST ADV MOST LIKELY SES APR, HOWEVER, NEEDS TO DISCUSS WITH SISTER FIRST. *** CASE CLOSE 10/16/2003 08:59:12 AM ESMART
Additional Summary:

Toyota ID No:
NHTSA ODI No: 10963060
Date of Incident: 20031001
Vehicle: 2003 TOYOTA CAMRY
Location of Incident: GIRARD, PA
NHTSA Summary:
CONSUMER STATED THE VEHICLE EXPERIENCED SUDDEN ACCELERATION WHEN SHIFTING FROM PARK TO REVERSE AND THE VEHICLE COLLIDED WITH FUEL PUMP GUARD RAIL. DROVE THOUGH IT AND CRASHED INTO THE REAR OF A VEHICLE. *AK *PB
Additional Summary:

Toyota ID No:
NHTSA ODI No: 10034972
Date of Incident: 20031002
Vehicle: 2002 TOYOTA CAMRY
Location of Incident: MIDLOTHIAN, VA
NHTSA Summary:
WHILE APPLYING THE BRAKE PEDAL VEHICLE ACCELERATED UNCONTROLLABLY. CONSUMER WAS ABLE TO MAINTAIN CONTROL OF THE VEHICLE, AND PULLED OVER. VEHICLE WAS TAKEN TO THE DEALER FOR INSPECTION TWICE. HOWEVER, THE MECHANIC COULD NOT DUPLICATE THE PROBLEM. *AK
Additional Summary:

Toyota ID No:
NHTSA ODI No: 10063312
Date of Incident: 20031002
Vehicle: 2003 TOYOTA CAMRY
Location of Incident: FAWTUCKET, RI
NHTSA Summary:

THE VEHICLE CONTINUED TO ACCELERATE UPON DEPRESSION OF THE BRAKE PEDAL. THIS RESULTED IN THE CONSUMER BROAD SIDING ANOTHER VEHICLE. *AK. THE DEALER INFORMED THE CONSUMER THAT THE BRAKES WOULD EVENTUALLY ADJUST TO THE CONSUMER AS THE COMPUTER SETS ITSELF. *SC *PB
Additional Summary:

Toyota ID No:
NHTSA ODI No: 10046001
Date of Incident: 20031019
Vehicle: 2000 TOYOTA CELICA
Location of Incident: AVON, IN
NHTSA Summary:
ACCELERATOR ON 2000 TOYOTA CELICA STUCK AND I ENDED UP GOING THROUGH THE WINDOW OF A BUILDING.*AK
Additional Summary:

Toyota ID No:
NHTSA ODI No: 10072246
Date of Incident: 20031027
Vehicle: 2003 TOYOTA CAMRY
Location of Incident: DALY CITY, CA
NHTSA Summary:
AFTER BACKING OUT OF THE DRIVEWAY AND COMING TO A STOP SIGN CONSUMER DEPRESSED THE BRAKES AND VEHICLE SURGED FORWARD. WHEN THE BRAKE PEDAL WAS DEPRESSED AGAIN AT ANOTHER STOP VEHICLE SURGED, NEARLY CAUSING AN ACCIDENT. VEHICLE SURGED FORWARD WHILE DEPRESSING THE BRAKES ON THREE OCCASIONS. VEHICLE WAS TAKEN TO THE DEALER ON TWO OCCASIONS 09/7. THE PROBLEM WAS NOT RESOLVED. *AK *NM
Additional Summary:

Toyota ID No:
NHTSA ODI No: 10412588
Date of Incident: 20031025
Vehicle: 2003 TOYOTA CAMRY
Location of Incident: RICHMOND HILL, GA
NHTSA Summary:
WHILE DRIVING, THE VEHICLE ACCELERATED. THE CONSUMER COULD NOT STOP THE VEHICLE EVEN THOUGH HER FEET WAS ON THE BRAKE. THE VEHICLE SURGED. THE CONSUMER STATED IT SEEMED LIKE A COMPUTER PROBLEM. AN ACCIDENT DID OCCUR, HOWEVER THERE WERE NO INJURIES. THE CONSUMER HAD TO MAKE THE VEHICLE SPIN BEFORE SHE COULD STOP IT. PLEASE PROVIDE ANY FURTHER INFORMATION. *PB
Additional Summary:

Toyota ID No: 20031106 1071
NHTSA ODI No:
Date of Incident: 20031100
Vehicle: 2003 TOYOTA, LEXUS CAMRY, CAMRY SOLARA, ES300
Location of Incident: WAPPINGERS FALLS, NY
NHTSA Summary:
*** PHONE LOG 11/06/2003 02:55:43 PM LESPINOZA
ARB

STS DAUGHTER WAS DRIVING VEH AND PULLED VEH INTO A PARKING SPACE. STS DRIVER APPLIED THE BRAKES AND THE VEH SURGED FORWARD. STS DLR PUT VEH ON A DIAG MACHINE AFTER THE COLLISION CENTER RPRD IT. DLR ADV VEH IS OKAY. CUST STS SURGING ISSUE IS INTERMITTENT AND HAS EXPERIENCED THE SAME CONCERN ABOUT 4 TIMES. STS NOT INJURED, EVERYONE IN SEATBELT, STS AIR BAGS DID NOT DEPLOY. CUST STS NO LONGER WANTS VEH, STS DOES NOT FEEL SAFE IN VEH.

*** CASE CLOSE 11/07/03 05:40:30 AM NY5
CASE DISPATCHED TO FTN JLACEFIELD AND DSPM NMILLER.
*** NOTES 11/07/2003 08:35:42 AM ESTAPLER
ARBITRATION PAPERWORK SENT TO CUST VIA UPS FIRST CLASS MAIL 11/7.
*** NOTES 12/02/03 11:51:50 AM NY5
PER FTN, JOE LACEFIELD, INSPECTED VEHICLE WITH CUSTOMER. FOUND NO CODES IN ANY MODULE. BRAKES WORKING CORRECTLY, AND TRANSMISSION SHIFTING CORRECTLY. DEMONSTRATED THE BRAKES WOULD HOLD BACK VEHICLE WITH FULL THROTTLE. ADVISED CUST WHAT TO LOOK FOR IF CONCERN DID OCCUR AGAIN: RPM, BRAKE FEEL, OR ENGINE REVING UP. ADVISED THAT VEHICLE WAS ACTING NORMALLY.
Additional Summary:

Toyota ID No:
NHTSA ODI No: 10160115
Date of Incident: 20031101
Vehicle: 2004 TOYOTA CAMRY SOLARA
Location of Incident: HILTON HEAD ISLAND, SC
NHTSA Summary:
MY 2004 TOYOTA SOLARA SLE V6 EXHIBITS SEVERE THROTTLE LAG AT SPEEDS LOWER THAN 50 MPH. THE LAG IS AT ITS WORST WHILE DECELERATING AND THEN ACCELERATING, WITH A LAG OF UP TO 1-2 SECONDS. THE LAG IS ALSO SEVERE FROM A STOP OR FROM A ROLLING SPEED OF 10 MPH OR LESS TO COMPENSATE FOR THE LAG, IT IS NATURAL FOR THE DRIVER TO PRESS THE GAS PEDAL EVEN FURTHER AND WHEN THE VEHICLE FINALLY DECIDES TO RESPOND, IT RESPONDS WITH RAPID ACCELERATION. THIS IS A SAFETY ISSUE AND HAS NEARLY CAUSED SEVERAL ACCIDENTS THROUGHOUT MY 3 YEARS OF OWNERSHIP. TOYOTA ISSUED A TSB FOR NEW PROGRAMMING FOR THE ECU/EST AND IT WAS FAILED TO FIX THE PROBLEM. *NM
Additional Summary:

Toyota ID No:
NHTSA ODI No: 10060873
Date of Incident: 20031108
Vehicle: 2000 LEXUS RX300
Location of Incident: BIRMINGHAM, MI
NHTSA Summary:
WHILE PULLING INTO A PARKING SLOT IN A GARAGE, MY LEXUS RX300 SUDDENLY ACCELERATED AND SLAMMED INTO A CONCRETE WALL. BOTH FRONT SEAT PASSENGER AIR BAGS WERE DEPLOYED.
Additional Summary:

Toyota ID No:
NHTSA ODI No: 10046784
Date of Incident: 20021110
Vehicle: 2002 TOYOTA COROLLA

Location of Incident: COLUMBIA, MD
NHTSA Summary:
WHILE SITTING AT A TRAFFIC LIGHT WITH FOOT ON THE BRAKES VEHICLE SUDDENLY ACCELERATED AND REAR-ENDED ANOTHER VEHICLE. UPON IMPACT, AIR BAGS FAILED TO DEPLOY. CONSUMER HAD VEHICLE TOWED TO THE DEALER FOR ANALYSIS. MECHANIC REPLACED BRAKE ROTORS AND OTHER BRAKE PARTS.*AK
Additional Summary:

Toyota ID No:
NHTSA ODI No: 10045944
Date of Incident: 20031110
Vehicle: 2002 LEXUS ES300
Location of Incident: ROCKVILLE, MD
NHTSA Summary:
1. WHILE PULLING INTO A PARKING SPACE, AT 2-4 MPH, WITH MY FOOT ON THE BRAKE, THE CAR SUDDENLY ACCERATED AT FULL SPEED, JUMPING THE CURB AND HITTING A TREE WITH FULL FORCE. BECAUSE OF PREVIOUS CONCERNS WITH THROTTLE PROBLEMS NOTED WITH THE DEALERSHIP AT 1000 AND 5000 MILE CHECK, I IMMEDIATELY CALLED THE LEXUS DEALERSHIP. AFTER A CONFERENCE CALL WITH LEXUS ROADSIDE ASSISTANCE AND THE DEALERSHIP, MY CAR WAS FLAT BEDDED TO THE DEALERSHIP. THE FRONTAL CRASH RENDERED THE VEHICLE UNDRIVABLE. RADIATOR DAMAGE WITH LEAKAGE OF FLUID COVERED A PORTION OF THE PARKING LOT. THE LEXUS DEALERSHIP SAID THEY WAS NO PROBLEM WITH THE CAR. I COULD HAVE BEEN KILLED OR SOMEBODY ELSE LIVE COULD HAVE BEEN IN DANGER. 2. THE FRONT AIR BAGS DID NOT INFLATE. 3. THE BRAKE ROTORS HAD TO BE CORRECTED AT 1500 MILES AND A "FAST" WAS ORDERED AND PUT ON THE CARE TO CORRECT THIS PROBLEM. 4. THE CAR WHEN DRIVING AT ABOVE 50 PULLS TO THE LEFT AND PRESS THE BRAKEDIDNGIT FULY AS THO THE CAR WAS UNEVEN EVEN WHEN NOT MOVING. AT THAT TIME I REQUESTED A WRITTEN EXPLANATION OF THIS PROBLEM AND TOLD MY RECORD AT THE DEALERSHIP SAID THAT IMMEDIATE THE ON THE NIGHT OF THE ACCIDENT I LEARNED BY REVIEWING COMPLAINTS FROM THE OFFICE OF DEFECT INVESTIGATIONS ON THE NHTSA WEB SITE THAT THE PROBLEMS HAVE BEEN KNOWN BY THE CORPORATE OFFICE OF LEXUS FROM AS EARLY AS JANUARY, 2002 IN REGARDS TO ALL OF THE ABOVE PROBLEMS. I ALSO FOUND OUT THERE HAVE BEEN TWO RECALLS ON THIS VEHICLE THAT I WAS NOT INFORMED ABOUT. I WILL BE REQUESTING AN INVESTIGATION WITH THE LEXUS EAST REGIONAL OFFICE AND DISCUSSING THIS WITH THE ROCKVILLE LEXUS OFFICE. I BELIEVE THAT THIS CAR IS UNSAFE TO DRIVE. I BROUGHT THE LEXUS VEHICLE EVEN WITH ITS PRICE TAG BECAUSE OF ITS REPUTATION AND TO DRIVE MY 3 YEAR OLD GRANDSON AND 1 YEAR OLD GRANDDAUGHTER IN THE SAFEST MANNER I COULD FACILITATE. I AM SURE THAT MY SON AND DAUGHTER-IN-LAW WILL NOT ALLOW THIS AFTER THIS CRASH!!!*AK
Additional Summary:

Toyota ID No:
NHTSA ODI No: 10062872
Date of Incident: 20031115
Vehicle: 2000 TOYOTA CAMRY
Location of Incident: MIDLOTHIAN, VA
NHTSA Summary:
WHILE APPLYING THE BRAKES VEHICLE SURGED FORWARD. *AK PROBLEMS WITH SUDDEN ACCELERATION. *MR
Additional Summary:

Toyota ID No:
NHTSA ODI No: 10063010
Date of Incident: 20031112
Vehicle: 2001 TOYOTA CAMRY
Location of Incident: HILLSIDE, NJ
NHTSA Summary:
WHILE APPLYING THE BRAKES ACCELERATOR PEDAL FAILED. AS A RESULT, CONSUMER'S VEHICLE REAR ENDED ANOTHER VEHICLE. *AK
Additional Summary:

Toyota ID No:
NHTSA ODI No: 10122662
Date of Incident: 20031117
Vehicle: 2002 TOYOTA CAMRY
Location of Incident: WORCESTER, MA
NHTSA Summary:
THE CONSUMER WAS INVOLVED IN AN ACCIDENT AFTER HIS VEHICLE SUDDENLY ACCELERATED AND DID NOT STOP WHEN THE BRAKES WERE APPLIED. *MB. ALL COMPUTER PULSES WERE TESTED AND NOTHING WAS FOUND WRONG. WHEN THE SHIFTER WAS PLACED IN THE DRIVE POSITION, THE VEHICLE TOOK OFF. THE BRAKES WERE APPLIED BUT DID NOT STOP THE VEHICLE. THE CONSUMER STEERED TO AVOID THE PARKED VEHICLES AND CRASHED INTO A CHURCH. *SC *JB
Additional Summary:

Toyota ID No:
NHTSA ODI No: 10071732
Date of Incident: 20031118
Vehicle: 2003 TOYOTA CAMRY
Location of Incident: WHITING, NJ
NHTSA Summary:
WHEN THE BRAKES WERE APPLIED, THE VEHICLE ACCELERATED. THE CONSUMER PUT THE VEHICLE IN NEUTRAL TO SLOW IT DOWN, BUT TO NO AVAIL. THIS PROBLEM HAS HAPPENED THREE TIMES WITH THIS PARTICULAR VEHICLE. THE DEALER HAS EXAMINED THE VEHICLE AND COULD NOT FIND THE CAUSE OF THE PROBLEM. *AK *SC *JB
Additional Summary:

Toyota ID No:
NHTSA ODI No: 10067591
Date of Incident: 20021123
Vehicle: 2001 TOYOTA SIENNA
Location of Incident: DULUTH, MN
NHTSA Summary:
THE CRUISE CONTROL LEVER IS LOCATED IN AN AREA THAT WHEN THE DRIVER TURNED THE STEERING WHEEL THE CRUISE CONTROL IS ENGAGED AND , RESULTED IN SUDDEN ACCELERATION. *AK THE CONSUMER INDICATED THE PROBLEM OCCURRED ON A CONSISTENT BASIS. *NM
Additional Summary:

Toyota ID No:
NHTSA ODI No: 10063346

Date of Incident: 20031124
Vehicle: 2003 TOYOTA CAMRY
Location of Incident: LAS VEGAS, NV
NHTSA Summary:
CONSUMER COMPLAINED ABOUT UNEXPECTED ACCELERATION PROBLEM. CONSUMER WAS DRIVING AND FAILED INTO A PARKING SPACE, AND VEHICLE UNEXPECTEDLY ACCELERATED, KNOCKING DOWN A PARKING SIGN. *AK *B *NM
Additional Summary:

Toyota ID No: 10068311021
NHTSA ODI No:
Date of Incident: 20031200
Vehicle: 2003 TOYOTA, LEXUS CAMRY, CAMRY SOLARA, ES300
Location of Incident: HOUSTON, TX
NHTSA Summary:
*** PHONE LOG 03/31/2004 01:23:16 PM VVERAZ JOHN:CUST ATTORNEY IS CLLING ON BEHALF OF CUST. ON DEC OF LAST YEAR OWNER APPLIED PRESSURE TO BRAKE AND THE VEH ACCELERATED INSTEAD OF BRAKING. THE BODY WORK WAS DONE AT WESTSIDE LEXUS. CUST SPOKE TO ROBERT PARNELL WHO ADV CUST THAT HIS DLR COULD NOT LOOK AT VEH TO SEE IF IT HAD A DEFECT. HE INFORMED JOHN TO CONTACT OUR DEPT. EXPLAINED TO CUST THAT THERE IS NOT A RECALL ON THE ES VEH. ADV CUST THAT INSPECTIONS ARE DONE AS A COURTESY IF NO REPAIRS HAVE BEEN MADE. -- *** NOTES 03/31/2004 01:28:21 PM VVERAZ JOHN WOULD LIKE TO KNOW IF THE DLR CAN INSPECT THE VEH TO SEE IF THE BRAKES ARE OPERATING AS DESIRED. *** NOTES 03/31/2004 01:26:49 PM VVERAZ TO: KANDY CARDER-SM AND BARBARA WILLIAMS-CSM (281) 558-3939 FROM: JAMES BIRE 310-466-2190 CUST WOULD LIKE HIS BRAKES INSPECTED TO MAKE SURE THERE IS NOT DEFECT. PLS REVIEW CASE AND FU TO FURTHER DISCUSS. THANK YOU. *** SUBCASE 10068311021-1 CREATED 04/01/2004 07:35:07 AM JBIRE1 *** NOTES 04/02/2004 09:14:19 AM JBIRE1 DLR NOTES FER ROBERT PARNELL SM, WE HAVE BEEN INSTRUCTED BY OUR DOM TO TURN THIS CASE OVER TO LEXUS NATIONAL BECAUSE OF THE PRESS THAT THIS ISSUE HAD BEEN GETTING. THIS CUSTOMER HAD NO ISSUES WITH THE VEHICLE UNTIL THE NEWSPAPER ARTICLE ABOUT A GOVERNMENT INVESTIGATION CAME OUT. *** PHONE LOG 04/02/2004 08:43:57 AM JBIRE ACTION TYPE: OUTGOING CALL LFT VM FOR KEN DOM SEEKING CLARIFICATION ON PROCEEDING OF CUST REQ. *** PHONE LOG 04/02/2004 09:59:29 AM JBIRE ACTION TYPE: INCOMING CALL KEN DOM ADV TO REQ A PIR TO BE PERFORMED ON VEH FOR AN INSP TO TAKE PLACE. *** PHONE LOG 04/02/2004 10:08:27 AM JBIRE ACTION TYPE: OUTGOING CALL ADV ATTY JOHN RECORE THAT LEXUS DOES NEED ALL OF THE INCIDENT DETAILS IN ORDER TO REQ A PIR FOR THE VEH. ATTY AGREED TO FAX EVERYTHING OVER TO LCS FOR REVIEW. *** PHONE LOG 04/07/2004 11:42:21 AM JBIRE ACTION TYPE: OUTGOING CALL LFT VM FOR ATTY JOHN RECORE & ADV THAT LEXUS DOES NEED ALL OF THE INCIDENT DETAILS IN
Additional Summary:

Toyota ID No:
NHTSA ODI No: 10063346
Date of Incident: 20031204
Vehicle: 2004 LEXUS ES330
Location of Incident: CENTREVILLE, VA
NHTSA Summary:
VEHICLE DOES NOT ALWAYS RESPOND PROPERLY TO DRIVER DEPRESSING ACCELERATOR. IN SOME CASES, WHEN COASTING SLOWLY (<10, UNDER 10 MPH), SUDDENLY PRESSING THE ACCELERATOR SHARPLY WILL HAVE NO EFFECT FOR ABOUT 1.5 SECONDS. DURING THE DELAY, THE ENGINE WILL CONTINUE TO IDLE AND VEHICLE

SPEED DO NOT INCREASE. AFTER THE DELAY, THE ENGINE AND VEHICLE SPEED INCREASE IN ACCORDANCE WITH THE ACCELERATOR PEDAL POSITION. THIS CAN LEAD TO AN ACCIDENT IF THE DRIVER IS MAKING A LEFT TURN WHEN THERE IS ONCOMING TRAFFIC. THERE IS ANOTHER POSSIBLY RELATED ANOMALY WITH THE CAR: WHEN DRIVING, UNDER SOME CIRCUMSTANCES, WHEN THE DRIVER SHARPLY PRESSES THE ACCELERATOR, THE ENGINE AND VEHICLE SPEED WILL NOT CHANGE FOR ABOUT 1.5 SECONDS. AFTER THE DELAY, THE TRANSMISSION DOWN SHIFTS AND THE ENGINE SPEED INCREASES.*AK
Additional Summary:

Toyota ID No:
NHTSA ODI No: 10078546
Date of Incident: 20031209
Vehicle: 2003 TOYOTA CAMRY
Location of Incident: GENESEO, IL
NHTSA Summary:
SOMETIME IN OCT, WHILE PULLING OFF OF I-74 ONTO 33RD ST. IN DAVENPORT, IA, WAS THE FIRST TIME THAT WHEN THE BRAKE WAS APPLIED THE CAR SPED UP RATHER THAN SLOWED DOWN. THIS HAPPENED AGAIN TOWARDS THE END OF NOVEMBER WHILE TRAVERSING FROM US-6 ONTO I-80 IN GENESEO. BOTH TIMES I HAD BEEN USING THE CRUISE CONTROL, DISENGAGED IT BY APPLYING THE BRAKE AND AS THE CAR SLOWED DOWN REAPPLICATION OF THE BRAKE CAUSED THE CAR TO SPEED UP. BY TAKING MY FOOT OFF THE BRAKE AND THEN REAPPLYING THE BRAKE CAR SLOWED NORMALLY ABOUT THE MIDDLE OF DECEMBER I HAD A MORE SERIOUS INCIDENT WHILE PULLING INTO A CONVENIENCE STORE OFF OF WOLF ROAD IN GENESEO. I DISENGAGED THE CRUISE AND PULLED INTO A PARKING PLACE. THE CAR SLOWED NORMALLY AND WAS ALMOST TO A STOP WHEN IT BEGAN TO ACCELERATE WHILE THE BRAKE WAS APPLIED. I TURNED THE CAR TO THE RIGHT, AND JUST MISSED THE BUILDING, BUT TOOK OUT A 4X4 SUPPORT FOR THE ROOF OVERHANG. DAMAGE WAS LIMITED TO DENTS ON THE CAR AND THE 4X4. NO PERSONAL INJURIES WERE INVOLVED. AFTER THE FIRST OCCURANCE I THOUGHT IT WAS MY MISTAKE, I APPLIED THE ACCELERATOR WHEN I MEANT TO APPLY THE BRAKE. THE SECOND TIME I FELT IT WAS PROBABLY A PROBLEM WITH THE CAR, AND WOULD BRING IT UP WITH TOYOTA NEXT TIME I BROUGHT THE CAR IN. THE THIRD TIME I WAS SURE THAT IT WAS A PROBLEM FOR TOYOTA AND I TOOK THE CAR INTO THE TOYOTA DEALER. THEY COULD NOT DUPLICATE THE PROBLEM AND SAID NEITHER THEY OR THE DISTRICT OFFICE HAD HEARD OF A SIMILAR PROBLEM BEFORE. WE THEN CONTACTED THE TOYOTA OFFICE IN CALIFORNIA, AND THEY TOOK DOWN THE INFOMATION, INFORMING US THIS PROBLEM HAD NOT OCCURRED BEFORE. LAST WEEK AGAIN TOOK OF THE NHTSA CONTACTED US AND ASKED QUESTIONS ABOUT THE THREE OCCURANCES. AFTER LOOKING AT THE NHTSA WEB SITE AND FINDING MANY SIMILAR INSTANCES I DECIDED TO ADD MY COMPLAINT TO THE LISTING.*AK
Additional Summary:

Toyota ID No:
NHTSA ODI No: 10056537
Date of Incident: 20031209
Vehicle: 2003 TOYOTA CAMRY SOLARA
Location of Incident: WALNUT CREEK, CA
NHTSA Summary:
I WAS IN "REVERSE" AND BACKED INTO A CONCRETE POLE IN MY OFFICE PARKING GARAGE. I APPLIED THE BRAKES TO STOP THE VEHICLE. THE CAR JUMPED INTO "DRIVE," AND RAPIDLY ACCELERATED, AND WOULD NOT RESPOND TO MY EFFORTS TO BRAKE. I THEN HIT A CONCRETE POLE HEAD ON, WHICH TOTALED MY VEHICLE.*AK ON A PRIOR

OCCASION THAT HAPPENED IN FEBRUARY 2003, THE CONSUMER WAS DRIVING FOR SEVERAL MINUTES WITH THE CRUISE CONTROL SET TO 60-65 MPH. WITHOUT INPUT, THE VEHICLE SPEED INCREASED RAPIDLY TO 80-85 MPH. THE CONSUMER CANCELLED THE CRUISE BY APPLYING THE BRAKES, THEN TURNED OFF THE CRUISE MASTER SWITCH.
Additional Summary:

Toyota ID No:
NHTSA ODI No: 10114197
Date of Incident: 20031125
Vehicle: 2003 TOYOTA CAMRY
Location of Incident: BOCA RATON, FL
NHTSA Summary:
MY MOTHER BERTHA SUSSMAN WAS DRIVING AT A SLOW SPEED WHEN SHE APPROACHED THE GATE OF HER COMMUNITY. SHE STEPPED ON THE BRAKE AND THE CAR ACCELERATED. SHE HIT A TREE AS THE CAR PICKED UP SPEED. SHE HAS SPENT THE LAST YEAR IN THE HOSPITAL, HOSPICE, AND NURSING HOME.*AK
Additional Summary:

Toyota ID No: 2003010206/00
NHTSA ODI No:
Date of Incident: 20031222
Vehicle: 2003 TOYOTA, LEXUS CAMRY, CAMRY SOLARA, ES300
Location of Incident: VISALIA, CA
NHTSA Summary:
*** PHONE LOG 01/29/2004 11:01:36 AM ESTAPLES
----LEMON LAW ---- RECEIVED VIA CERTIFIED MAIL AT TCS WEST 1-29. CST ST3 (NONEMED) WITH ENGINE - IDLES TOO HIGH, LURCHES FORWARD. VEH OUT OF SERVICE SINCE 12/22/03.

*** CASE CLOSE 02/24/04 10:12:41 AM EF3
CUST HAS ACCEPTED TOYOTA'S REPURCHASE OFFER.
Additional Summary:

Toyota ID No:
NHTSA ODI No: 10066132
Date of Incident: 20031225
Vehicle: 2001 TOYOTA SEQUOIA
Location of Incident: BAYTOWN, TX
NHTSA Summary:
2001 SR5 SEQUOIA WITH 4700 MI, AND TWO ACCELERATOR PROBLEMS: 1. SURGING FROM A STOP AND WHEN ACCELERATING OUT OF A TURN. 2. DEAD ACCELERATOR FOR A PERIOD OF SIX TO TEN SECONDS WHEN ACCELERATING OUT OF A TURN. THE ENGINE DOES NOT RE-IT JUST REMAINS AT AN IDLE FOR THE SIX TO TEN SECONDS WHILE THE DRIVER IS PRESSING ON THE ACCELERATOR PEDAL. THESE TWO PROBLEMS ARE NOT CONSTANT THEY JUST HAPPEN FROM TIME TO TIME. THREE TRIPS TO THE DEALER SO FAR RESULTS IN THE RESPONSE "UNABLE TO DUPLICATE PROBLEM". THE FIRST FAILURE DATE IS THE DAY WE DROVE THE VEHICLE HOME FOR THE FIRST TIME AND CONTINUES TO NOW.
Additional Summary:

Toyota ID No:

NHTSA ODI No: 10057204
Date of Incident: 20011225
Vehicle: 2003 TOYOTA COROLLA
Location of Incident: SMITHTOWN, NY
NHTSA Summary:
2003 TOYOTA COROLLA SUDDENLY ACCELERATES AGAINST THE WILL AND CONDUCT OF THE OPERATOR OF THE VEHICLE ON SEVERAL OCCASIONS - TOYOTA MOTOR COMPANY IGNORES ISSUE REPEATEDLY. ODI CASES 501109 AND 10031102 ARE INVITED TO CONTACT ME (SEAN) AT 646-262-4970 TO DISCUSS SIMILAR EXPERIENCE.*-AK
Additional Summary:

Toyota ID No:
NHTSA ODI No: 10053820
Date of Incident: 20041227
Vehicle: 2003 TOYOTA CAMRY
Location of Incident: FRESNO, CA
NHTSA Summary:
UPON PUTTING VEHICLE IN PARK WHILE AT A COMPLETE STOP WITH FOOT DEPRESSED ON THE BRAKE PEDAL, THE VEHICLE ACCELERATED AT A RAPID SPEED. AS A RESULT THE VEHICLE SIDE SWIPED ANOTHER VEHICLE ON IT'S RIGHT SIDE. A FACTORY REPRESENTATIVE INSPECTED THE VEHICLE BUT COULDN'T LOCATE THE CAUSE OF THE RAPID AND SUDDEN ACCELERATION. *NM *NM
Additional Summary:

Toyota ID No: 20010209436
NHTSA ODI No:
Date of Incident: 20040060
Vehicle: 2002 TOYOTA, LEXUS CAMRY
Location of Incident: THOUSAND OAKS, CA
NHTSA Summary:
*** PHONE LOG 03/09/2004 09:22:18 AM JARMENTA
03 CAMRY, CUST STS VEH SURGES AT FULL THROTTLE WHEN IN GEAR, STS VEH HAS DONE IT TWICE IN DRIVE, AND ONCE IN REVERSE, CUST STS DLR WAS UNABLE TO DUPLICATE CONCERN, AND THEREFORE COULD NOT STR, CUSTS STS READ THAT NHTSA WAS INVESTIGATING THIS CONCERN (INVESTIGATION # PE04021), AND WOULD LIKE TO KNOW WHAT SHE NEEDS TO DO TO PROCEED.
NOTE TO CRM- IF NECESSARY PLS CONTACT DSPM FOR FURTHER REVIEW.THANKS

*** CASE CLOSE 03/09/04 10:12:11 AM OLR04117
SPOUSE ABOUT HER CONCERN (INVESTIGATION # PE04021), WILL STAY IN CONTACT IF THERE IS A RECALL. SO FAR, WE HAVE NOT BEEN ABLE TO DUPLICATE HER CONCERN.

Additional Summary:

Toyota ID No: 20040231020
NHTSA ODI No:
Date of Incident: 20040000
Vehicle: 2003 TOYOTA, LEXUS CAMRY
Location of Incident: LAS VEGAS, NV
NHTSA Summary:
*** PHONE LOG 03/17/2004 11:04:35 AM MCERVANTES1

03 CAMRY 30K, CUST STS CUST IS EXPERIENCING CONCERNS W/ THE THROTTLE CONTROL SYSTEM. CUST STS WHEN CUST PUTS VEH OF PEDAL & IS STEPPING ON THE BRAKE IT ACCELERATES. CUST STS IT DOES NOT HAPPENS ALL THE TIME. CUST STS WILL NOT DRIVE VEH B/C IS CONCERNED W/ SAFETY... CUST FLS THIS IS A SAFETY CONCERN & WOULD LIKE TO KNOW WHAT TOY IS DOING IN REGARDS TO THIS CONCERN. CUST STS TO KNOW IF VEH IS INVOLVED IN ANY RBC.
Additional Summary:

Toyota ID No: 20040311106048
NHTSA ODI No:
Date of Incident: 20040000
Vehicle: 2002 TOYOTA, LEXUS CAMRY, CAMRY SOLARA, ES300
Location of Incident: CORAM, NY
NHTSA Summary:
*** PHONE LOG 03/11/2004 06:42:21 AM SFARR
CUST HUSB, WILLIAM, CALLING TO ADV VEH BEGAN SURGING MONTHS AGO. STS HAS FRIEND WITH SAME VEH AND HIS VEH WAS IN AN ACCIDENT. CUST STS HAS SOME IN NY AND FL. CUST STS CURRENTLY IN FL NOW.

*** CASE CLOSE 03/11/2004 06:42:29 AM SFARR
NCR APOL, ADV CONCERNS HAVE BEEN DOC AT HQ. CURRENTLY NO ASC'S AND REF TO CRM FOR FURTHER CLASIFICATION.

Additional Summary:

Toyota ID No: 20040331109527
NHTSA ODI No:
Date of Incident: 20040000
Vehicle: 2002 TOYOTA, LEXUS CAMRY, CAMRY SOLARA, ES300
Location of Incident: RIVERSIDE, CA
NHTSA Summary:
*** PHONE LOG 03/31/2004 10:34:25 PM BORGUCO
LORAN (HUSBAND) CUST STS HEARD SOME INFO ABOUT THE THROTTLE STUCKING WHEN THE VEH IS AT A STOP CUST STS THIS INFO WAS HEARD THROW THE NEW. CUST STS HIS WIFE HAS HAD THIS HAPPEN TO HER A COUPLE OF TIME CUST STS WOULD LIKE TO HAVE THE VEH DIAG AT THE DLR.
*** DEALER NOTES: 03/31/04 14:24:17
CRM SPK TO CUST. LORAN ON 03/31/04@01:10PM. CRM CLARIFIED TO WARNTY COVRAGE TO CUST & EXPLAIN THAT CUST MUST SIGN AUTH FOR INLR TO INSP & RD-TEST VEH BEFORE DETERMIN CONCRN IS UNDER WARNTY OR NOT. CUST UNDERSTD. CUST STS HELL CALL WIFE SANDY TO CONFIRM MILEAGE ON VEH & C/B TO SVC DEPT TO SETUP APPT. TO BE UPDATED.
*** DEALER NOTES: 03/26/04 09:43:06
CUST CALLED SVC MGR ON 03/25@ 11:45AM. APPT SET FOR MONDAY 5/3/04 FOR DLR TO RD TEST VEH. DI & CONTACTD TAS, CASE # 04073066. TAS INFM DLR THERE'S NO CONCRETE CASE/EVIDENCE DOC FOR 03 MODEL CAMRY PERTAINING TO CUST'S CONCRN OF VEH STRGING FORWARD DURING IDLING. SEE CLOSING STATMT.

*** CASE CLOSE 03/16/04 09:46:02 AM DLR804288
CUST CALLED IN & LMM FOR SVC MGR ON 3/13/04 @ APPR 8AM. MSG STS HE WILL NOT BRING VEH IN AFTERALL. MSG STS IF CONCRN RE-OCCURS, HE WILL CONTACT DLR AGAIN. CLOSE OUT.

Additional Summary:

Toyota ID No: 20040312121357
NHTSA ODI No:
Date of Incident: 20040000
Vehicle: 2002 TOYOTA, LEXUS CAMRY, CAMRY SOLARA, ES300
Location of Incident: SOMERVILLE, MA
NHTSA Summary:
*** PHONE LOG 03/12/2004 03:04:17 PM DDRURY
CUST STS HAS EXPERIENCED SOME SURGING WHEN STOPPED. CUST STS HEARD CONCERNS ABOUT VEH SURGING. CUST SKS TO VOICE HER CONCERNS.

*** CASE CLOSE 03/12/2004 03:04:24 PM DDRURY
NCR APOL AND ADV CUST WOULD DOC HER CONCERNS. NCR PROVIDED CASE #.
Additional Summary:

Toyota ID No: 20040316161002
NHTSA ODI No:
Date of Incident: 20040000
Vehicle: 2002 TOYOTA, LEXUS CAMRY, CAMRY SOLARA, ES300
Location of Incident: EUGENE, OR
NHTSA Summary:
*** PHONE LOG 03/16/2004 01:22:47 PM JCORONA
FA
NO PREV CASE
CUST STS OVER REVERSE, MONITER THE VEH WILL SURGE FORWARD WHEN FOOT IS ON THE BREAK. CUST STS THE VEH RECENTLY DID THAT TX IN ONE MONTH. CUST STS IS VERY CONCERNED WITH SAFETY & STS HAS TO APPLY THE EMERGENCY BRAKE TO STOP THE VEH. CUST STS THE DLR WAS NOT ABLE TO DUP AFTER HAVING VEH 2DAYS. CUST STS THE DLR ADV DROVE VEH 4X ON THE SECOND DAY.
*** NOTES 03/16/2004 01:43:08 PM JACKSON
CUST CALLED BACK STATING WANTED ADDITIONAL INFORMATION. CUST STS REQ THE NUMBER TO NHTSA. NCR APOL AND ADV 888#. NCR OFFERED ADDITIONAL ASSISTANCE, CUST DECLINED.
*** NOTES 03/19/04 02:17:21 PM PTL1
RCR CALLED CUSTOMER LEFT MESSAGE ADVISING CUSTOMER THE SITUATION WITH HER VEHICLE WAS NOT BEEN DUPLICATED WHILE AT THE DEALERSHIP FOR TIMETABLE OF 8 DAYS. THE SERVICE MANAGER HAS PERSONALLY DRIVEN THIS VEHICLE AND HAS NOT BEEN ABLE TO REPRODUCE THE CONDITION.

*** CASE CLOSE 03/19/04 04:05:55 PM PTL1
RCR CONTACTED CUSTOMER REVIEWED ISSUES WITH SURGE CONDITION AND THAT THE DEALERSHIP COULD NOT DUPLICATE IT AFTER 8 DAYS OF DRIVING VEHICLE. RCR ADVISED CUSTOMER AS SOON AS A FIX IS AVAILABLE SHE WILL BE NOTIFIED AND CONDITION WILL BE CORRECTED. CUSTOMER VERY FRUSTRATED BUT UNDERSTANDS NO FIX AT THIS TIME.

Additional Summary:

Toyota ID No: 20040332466602
NHTSA ODI No:
Date of Incident: 20040000

Vehicle: 2002 TOYOTA, LEXUS CAMRY, CAMRY SOLARA, ES300
Location of Incident: LAFAYETTE, IN
NHTSA Summary:
*** PHONE LOG 03/24/2004 10:41:32 AM PTIMBERLAKE
POTENTIAL ARBITRATION
STS THE VEH LUNGES FORWARD WHEN FOOT IS ON THE BRAKE. STS COND IS INTERMITTENT, AND THE DLR HAS NOT BEEN ABLE TO DUP. DLR STS CUST IS PRESS GAS PEDAL INSTEAD OF BRAKE PEDAL. CUST CNCRNS AS FLS THAT THE COND COULD CAUSE HER TO HIT A PEDESTRIAN OR VEH WHILE IN FRONT OF THEM. CUST STS VEH HAS NOT BEEN IN ACCIDENT. SEE INV - 20040319046

*** CASE CLOSE 03/25/04 12:27:08 AM CRES
REGION CONTACTED DLR. SM ROB LAWSON WHO STATED THAT HE DROVE VEHICLE 4 - 5 TIMES. ONE TIME DROVE VEHICLE FOR 15 MILES. NEVER ABLE TO DUPLICATE A "LUNGES FORWARD" CONDITION AS REP. BY CUSTOMER. DLR. SALES MGR. ALSO DROVE COULD NOT DUPLICATE. REGION TOLD CUST. CANNOT FIX ISSUE THAT DLR. IS NOT REQUEST. ASSIS. ON. SOUG. CUST. MEET W DSPM. CUST. SAID NO. CUST. ASKED ABOUT INV. REGION STATED WE ARE COOPERATING AND TO CALL NHSTA IF SPECIFIC TS ON THE INVES.

Additional Summary:

Toyota ID No: 20040322[illegible]44
NHTSA ODI No:
Date of Incident: 20040000
Vehicle: 2002 TOYOTA, LEXUS CAMRY, CAMRY SOLARA, ES300
Location of Incident: BROKEN ARROW, OK
NHTSA Summary:
*** PHONE LOG 03/22/2004 08:19:43 AM VVERAJ1 CUST STS THAT HE HAD THE ECM UPDATE. HE STS THAT RECENTLY HE RECD A SECOND LETTER. HE WAS WONDERING IF THERE WAS AN ADDITIONAL UPDATE OR IF IT WAS THE SAME ONE THAT HE ALREADY HAD DONE. CUST STS THAT HIS VEH SURGES WHEN HE SLOWS DOWN TO COME TO A STOP. ADV CUST THAT RECOMMEND THE DLR INSPECT HIS VEH. *** CASE CLOSE 03/22/2004 08:20:10 AM VVERAJ1 APOL AND ADV CUST THAT I AM NOT SHOWING ANY OUTSTANDING SSC'S. RECOMMENDED CUST HAVE HIS VEH INSPECTED AND THEN CONTACT US FOR FURTHER ASSIST IF REQUIRED. NO ASSIST REQ AT THIS TIME.
Additional Summary:

Toyota ID No: 20040113[illegible], 20040128318
NHTSA ODI No:
Date of Incident: 20040000
Vehicle: 2003 TOYOTA, LEXUS CAMRY, CAMRY SOLARA, ES300
Location of Incident: VISALIA, CA
NHTSA Summary:
*** PHONE LOG 03/13/2004 01:08:26 PM SBROWN
CUST STS ON 3 DIFF OCCASIONS VEH HAS SURGED FORWARD WHEN APPLIED THE BRAKES. STS TWICE DLR HAS INSPECT VEH & ADVISED THAT SYSTEM SHOWED "NO DIAGNOSTIC CODES". STS VEH IS CURRENTLY AT DLERSHIP UNDERGOING FURTHER DIAGNOSIS & DLR ADVISED CUST TO REPORT MATTER TO CAC. STS BEFORE CALLING RESEARCHED NHTSA & FOUND 7 REPORTS (FROM OTHER 03 CAMRY OWNERS)EXPERIENCING THIS SAME COND. CUST SKS TO ADVISE TMS OF VEH CONCERNS, STS NOT SURE WHAT IS GOING TO BE DONE TO RPR VEH. (NCR...
*** NOTES 03/13/2004 01:13:06 PM SBROWN

...APOL & ADVISED WILL DOC CUST CONERNS W/PRODUCT AT THIS MILEAGE INTERVAL
BUT AS THIS ISNOT AWEEOF ANY LARGE SCALE ISSUE AFFECTING 03 CAMRY, MUST
HANDLE MATTER CASE-BY-CASE WHEN VEH COMES INTO DLR. NCR EXPLAND TOYOTA
RELIES ON DLR TO DUPLICATE COND & FROM THERE BEIDDER PROPER DIAGNOSIS &
RECOMMONDATION FOR RPRS. NCR EXPLAND TOYOTA ALSO PROVIDES TECH SUPPORT
TO DLRS FOR UNUSUAL CASES. NCR ADVD COMMENTS DOCD & CUST CAN CONTINUE TO
WORK W/DLR RE: IDAG & RPRS. CUST AGREED.

*** CASE CLOSE 01/13/2004 01:13:17 PM SBROWN
CLOSE CASE.
*** PHONE LOG 01/20/2004 08:26:10 AM ALZAO
AFB
FBRS CASE 200401310842
CUST STS ON 3 DIFF OCCASIONS VEH HAS SURGED FORWARD WHEN APPLIED THE
BRAKES. STS PWCK DLR HAS INSPECT VEH. & ADVISED THAT SYSTEM SHOWED "NO
DIAGNOSTIC CODES". STS VEH IS CURRENTLY AT DLRSHP UNDERGOING FURTHER
DIAGNOSIS & DLR ADVISED CUST TO REPORT MATTER TO CAC. STS BEFORE CALLING
RESEARCHED NHTSA & FOUND 7 REPORTS ITR/IM OTHER 03 CAMRY
OWNERSEXPERIENCING THIS SAME COND.
*** NOTES 01/21/2004 10:24:47 AM WSAMUELS
ARB-PPRE WAS SENT TO THIS CUSTOMER VIA USPS FIRST CLASS MAIL DATED 1/21/04.
ALLOW 7-10 B/D FOR PPRE.

*** CASE CLOSE 01/26/04 10:46:21 AM SFX
CUST MAY PURSUE ARB.
Additional Summary:

Toyota ID No: 200403990658
NHTSA ODI No:
Date of Incident: 20040600
Vehicle: 2003 TOYOTA, LEXUS CAMRY, CAMRY SOLARA, ES300
Location of Incident: CINCINNATI, OH
NHTSA Summary:
*** PHONE LOG 03/09/2004 10:53:26 AM JARAMENTA
CUST STS IS HAVING A CONCERN WITH HIS VEH SURGING, STS VEH JUMPS FORWARD,
AND IS AFRAID THAT VEH MAY JUST AT A BAD MOMENT, AND INJURE SOMEONE. STS
SPOKE TO SERV MGR AND HAS APPT ON FRIDAY. HOWEVER DLR ADVD HAS NEVER HEARD
OF CONCERN. AND ADVD MAY NOT BE ABLE TO ASSIST.
NOTE TO CRM IF NECESSARY PLS CONTACT YOUR INSPM FOR FURTHER ASSIST. THANKS
*** NOTES 03/11/04 06:14:09 AM CSN
EMAIL TO 3 DAY NOTICE TO CRM AND SENT TO CALL CUSTOMER TO AVOID POSSIBLE NO
RESPONSE OR UPDATE CASE NOTES.

*** CASE CLOSE 03/11/04 11:45:45 AM DLR34078
WE ARE APPOINT FPT ON 3/30/04 FOR INSPECTION TODAY. WE HAVE BEEN UNABLE TO
DUPLICATE CONDITION. WE HAVE CONTACTED TECH ASST AND WILL WORK WITH
THEM FOR POSS SOLUTION IF NEEDED
Additional Summary:

Toyota ID No: 200401181173
NHTSA ODI No:
Date of Incident: 20040600
Vehicle: 2003 TOYOTA, LEXUS CAMRY, CAMRY SOLARA, ES300

Location of Incident: EDMOND/S, WA
NHTSA Summary:
*** PHONE LOG 03/18/2004 03:27:43 PM DDRURY
CUST STS SHE WAS PARKED AND VEH SURGED FORWARD. CUST STS ANOTHER TIME SHE
WAS STOPPED AT TRAFFIC LIGHT AND WITH FOOT ON THE BRAKE SHE WAS MOVING
FORWARD. CUST STS DLR DID NOT INSPECT VEH EITHER TIME. CUST SKS TO VISIT HER
CONCERNS.

*** CASE CLOSE 03/18/2004 02:17:58 PM DDRURY
NCR APOL AND ADV CUST WOULD DOC CONCERNS. NCR PROVIDED CASE #.
Additional Summary:

Toyota ID No: 200401261552
NHTSA ODI No:
Date of Incident: 20040100
Vehicle: 2002 TOYOTA, LEXUS CAMRY, CAMRY SOLARA, ES300
Location of Incident: GIDDSBRO, IL
NHTSA Summary:
*** PHONE LOG 03/26/2004 03:21:55 PM LESPINOZA
CUST STS ONGOING VEH CONCERN. CUST STS APPLIES THE BRAKES AND VEH
ACCELERATES FORWARD, INTERMITTENTLY. CUST STS 3RD TIME SHE OCCURED VEH
WAS INVOLVED IN AN ACCIDENT. CUST STS WAS PULLING INTO A STORE PARKING SPACE,
CUST APPLIED THE BRAKES, VEH ALMOST CAME TO A COMPLETE STOP THEN
ACCELORATED FORWARD. STS SWERVED TO MISS A BUILDING AND HIT A POLE W/ THE
RIGHT FRONT BUMPER AND THE POLE CAME DOWN ON THE HOOD. CUST STS DLR
INSPECTED VEH, WERE NOT ABLE TO DUPLICATE & ADVD
*** NOTES 03/26/2004 03:23:02 PM LESPINOZA
VEH WAS OKAY. CUST STS BODY WORK HAS BEEN COMPLETED. CUST STS WILL
CONTINUE TO DRIVE VEH. NCR OFFERED REGION OPEN AND CUST DECLINED.

*** CASE CLOSE 03/26/2004 03:31:02 PM LESPINOZA
NCR ADV CUST WILL DOC CONCERN AT TOY HQ.
Additional Summary:

Toyota ID No: 200404061118
NHTSA ODI No:
Date of Incident: 20040100
Vehicle: 2003 TOYOTA, LEXUS CAMRY, CAMRY SOLARA, ES300
Location of Incident: WAUKEGAN, IL
NHTSA Summary:
*** PHONE LOG 03/04/2004 01:50:25 PM PTIMPERLAKE
<<FCR>>> CUST STS SHE WAS ENTERING AN INTERSECTION AND APPLIED THE BRAKES
STS INSTEAD OF VEH SLOWING DOWN THE VEH ACCELERATED CAUSING HER TO HIT
ANOTHER VEH ON OTHER VEH'S REAR PASSENGER SIDE STAR REAR TIRES. CUST STS VEH
ACCELERATING WHEN APPLYING BRAKES HAS HAPPENED BEFORE. CUST WANTS TO
KNOW WHY VEH ACCELERATED WHEN APPLYING THE BRAKES. LEGAL REQUESTS FCRP
WITH MANY INTERIOR/EXTERIOR PHOTOS.
*** NOTES 03/07/04 07:17:12 AM CHIS
REGION LEFT MESSAGE ON CUSTOMER'S PHONE RECORDER TO PLEASE CALL TO SET UP
AN APONTMENT FOR INSPECTION OF VEHICLE.
*** NOTES 03/15/2004 10:09:19 AM LESPINOZA
NCR CB CUST . CUST STS REGION INSPECTED THE VEH AND ADV CUST VEH IS OPERATING
AS DESIGNED. STS REGION WAS NOT ABLE TO DUPLICATE. CUST STS DOES NOT FEEL

SAFE IN VEH. NCR ADV CUST CAN PURSUE OUTSIDE OF TOY, GET A 2ND OPINION OR
PURSUE ARB. NCR OFFERED ADDRESS TO LEGAL.

*** CASE CLOSE 03/24/04 09:40:32 PM CHIS
FTS INSPECTED VEHICLE AND ROAD TESTED. VEHICLE OPERATED AS DESIGNED.
CUSTOMER WAS TOLD SHE MUST CONSIDER HUMAN ERROR. LETTER SENT TO
CUSTOMER ADVISING THAT VEHICLE OPERATED AS DESIGNED.

Additional Summary:

Toyota ID No: 200403160339
NHTSA ODI No:
Date of Incident: 20040100
Vehicle: 2004 TOYOTA, LEXUS CAMRY, CAMRY SOLARA, ES300
Location of Incident: DOWNERS GROVE, IL
NHTSA Summary:
*** PHONE LOG 03/16/2004 09:10:19 AM BBRISIDE
<<<FCR>>>
CUST STS WAS TURNING INTO A PARKING LOT WHEN THE VEH SUDDENLY ACCELERATED
FORWARD AND HIT A WALL. STS HAD VEH SERVICED THE DAY BEFORE AND FELT
SOMETHING WASN'T SAME WITH VEHICLE. STS THERE WERE MAJOR INJURIES BUT
SHE HAS BRUISES AND HAS DOCTORS APPT. STS WOULD LIKE INSPECTION OF VEH TO
DETERMINE IF SOMETHING FAULTY IN ENGINE. NCR APOL & ADV OF FCRP INSPECTION.
CUST REQUESTED INSPECTION AND IS AWARE OF 90-DAY PROCESS.
*** NOTES 03/16/2004 09:11:55 AM BBRISIDE
LEGAL REQUESTS FIELD REPORT WITH MANY INTERIOR AND EXTERIOR PHOTOS
*** NOTES 03/23/2004 12:30:24 PM LESPINOZA
NCR CB CUST. CUST STS HAS NOT BEEN CONTACTED BY THE REGION AND SKS CASE
STATUS. CUST STS BODY WORK WILL BE COMPLETED ON 2/5/04 AND WOULD LIKE VEH
INSPECTED BEFORE TAKING DELIVERY. NCR ADV WOULD CONTACT REGION AND ADV
CUST SKS FU.
NCR CONTACTED REGION LEFT MSG FOR JASON RUSSO TO ADV CUST SKS FU
REGARDING FCRP INSPECT.
*** NOTES 03/25/04 09:26:08 AM CHIS
CONTACTED CUST. CUST NOT AVAIL. LEFT MESSAGE FOR CONTACT.
*** NOTES 03/27/04 09:28:32 AM CHIS
CONTACTED CUST. ADV THAT VEH HAS NOT BEEN REPAIRED AND AT PACKEY WEBB
FORD DLR IN WHEATON, IL. ADV WOULD HAVE VEH INSPECTED
*** NOTES 03/27/04 09:38:57 AM CHIS
FORWARDED TO FTS FOR INSPECTION.
*** NOTES 02/06/04 12:41:14 PM CHIS
FTS COMPLETED INSPECTION OF VEH ON 1/29/04. FTS STS UPON INSPECTION VEH WAS
OPERATING PROPERLY AND FUNCTIONED AS DESIGNED.

*** CASE CLOSE 02/06/04 12:44:34 PM CHIS
VEH OPERATING PROPERLY.
*** NOTES 03/11/2004 08:13:42 AM MSOLORIO
CUST CB SHE FEELS THAT TOY WAS RESPONSIBLE FOR ISSUE THAT OCCURED, NCR
TRANSFERRED TO PRODUCT LIABILITY PER ADV FROM SUPERVISOR.
*** NOTES 03/12/2004 09:15:29 AM PTIMPERLAKE
<<<OUTGOING CUST CALL>>> NCR RETURNING VM FROM CARL SIPEK - BROTHER (630-243-
1020). NCR SPOKE TO WIFE - LYNN WHO ADV HER HUSBAND HAS QUESTIONS ABOUT
NHTSA INVESTIGATION REGARDING CAMRY ACCELERATION. ADV LYNN TO HAVE HER
BROTHER OR WIFE'S IN LAW CALL BACK.

*** N
Additional Summary:

Toyota ID No: 10401790
NHTSA ODI No: 20040103
Date of Incident: 2003 TOYOTA CAMRY
Vehicle:
Location of Incident: DOWNERS GROVE, IL
NHTSA Summary:
OWNER OF 2003 TOYOTA CAMRY EXPERIENCED SUDDEN ACCELERATION SUGGEST
NHTSA INITIATE INVESTIGATION. *HF WHILE THE CONSUMER WAS PARKING THE
VEHICLE IT SUDDEN SURGED FORWARD HITTING A CONCRETE WALL. AS A RESULT THE
CONSUMER SUSTAINED SOME BRUISES. THE ACCIDENT CAUSED $5000 WORTH OF
DAMAGE TO THE VEHICLE. THIS INCIDENT WAS FOLLOWED BY TWO MORE SIMILAR
OCCURRENCES. NO ANSWER REQUIRED - DUPLICATE OF ODI REF. NO. 10401616. *MJJ SEE
ALSO 10068205. *DSY
Additional Summary:

Toyota ID No: 10067142
NHTSA ODI No: 20040101
Date of Incident: 2003 LEXUS ES300
Vehicle:
Location of Incident: URBANDALE, IA
NHTSA Summary:
CONSUMER COMPLAINED ABOUT UNEXPECTED ACCELERATION. CONSUMER TOOK
VEHICLE TO THE DEALER. ALSO, THE LEXUS CORPORATION SENT A REPRESENTATIVE TO
INSPECT THE VEHICLE, AND THEY CLAIMED THERE WAS NO PROBLEM. *AK CONSUMER
WAS PULLING OUT FROM A PARKING SPACE WHEN VEHICLE ACCELERATED FORWARD AS
SOON AS CONSUMER STEPPED ON THE BRAKE PEDAL. *LA
Additional Summary:

Toyota ID No:
NHTSA ODI No: 10072245
Date of Incident: 20040101
Vehicle: 2004 LEXUS ES330
Location of Incident: SAN MARINO, CA
NHTSA Summary:
AUTOMATIC TRANSMISSION/VEHICLE SPEED CONTROL/ACCELERATOR PEDAL FAILED.
*AK
Additional Summary:

Toyota ID No:
NHTSA ODI No: 10055728
Date of Incident: 20040100
Vehicle: 2003 TOYOTA CAMRY
Location of Incident: JAMAICA, NY
NHTSA Summary:
THE VEHICLE ACCELERATED ON ITS OWN WHICH CAUSED THE VEHICLE TO CRASH INTO
A WALL AND DAMAGE THE FRONT OF THE VEHICLE. *HB
Additional Summary:

Toyota ID No:
NHTSA ODI No: 10094578
Date of Incident: 20040106
Vehicle: 2003 TOYOTA CAMRY
Location of Incident: MASSPIE, MA
NHTSA Summary:
WHILE IN A PARKING LOT AND BACKING OUT OF A PARKING SPACE VEHICLE ACCELERATED, HITTING A PEDESTRIAN. *AK
Additional Summary:

Toyota ID No:
NHTSA ODI No: 10156012
Date of Incident: 20040109
Vehicle: 2004 TOYOTA CAMRY
Location of Incident: DOVER, NH
NHTSA Summary:
I OWN A 2004 CAMRY XE WITH THE 3.3 LITER V6. EVER SINCE WE PURCHASED THIS CAR WE HAVE PUT UP WITH A TERRIBLE HESITATION IN THROTTLE RESPONSE. MANY TIMES WE HAVE NEARLY BEEN HIT BY OTHER CARS WHILE PULLING INTO THE FLOW OF TRAFFIC. I HAVE TAKEN IT TO THE DEALERSHIP AND SPOKEN WITH THE MANAGER AS WELL AS MET WITH THE REGIONAL TOYOTA REP. THEY BOTH ACKNOWLEDGED THAT THIS IS AN ISSUE BUT OFFERED NO RESOLUTIONS. *NM
Additional Summary:

Toyota ID No:
NHTSA ODI No: 10062973
Date of Incident: 20040111
Vehicle: 2003 LEXUS ES300
Location of Incident: PHILADELPHIA, PA
NHTSA Summary:
WHILE DRIVING AT 15 MPH VEHICLE EXPERIENCED UNWANTED SUDDEN ACCELERATION. WHEN THIS OCCURRED CONSUMER IMMEDIATELY DEPRESSED THE BRAKE PEDAL, AND PUT VEHICLE IN NEUTRAL TO STOP THE ACCELERATION. *AK.
Additional Summary:

Toyota ID No:
NHTSA ODI No: 10108704
Date of Incident: 20040112
Vehicle: 2004 TOYOTA CAMRY
Location of Incident: BROOKLYN, NY
NHTSA Summary:
THE VEHICLE TENDS TO HESITATE AND NOT ACCELERATE WHILE PRESSING DOWN ON THE ACCELERATOR PEDAL WHILE ON THE ROAD. OWNER WILL CONTACT MANUFACTURER. *JB *NM
Additional Summary:

Toyota ID No:
NHTSA ODI No: 10154117

Date of Incident: 20040114
Vehicle: 2003 TOYOTA CAMRY
Location of Incident: DOWNERS GROVE, IL
NHTSA Summary:
2003 CAMRY ACCELERATED OUT OF CONTROL CAUSING CONSUMER TO CRASH INTO A WALL. ITS THE CONSUMER WANTED TO KNOW IF ANY ACTION WILL BE TAKEN REGARDING HER COMPLAINT. *JB
Additional Summary:

Toyota ID No:
NHTSA ODI No: 10055375
Date of Incident: 20040120
Vehicle: 2001 TOYOTA CAMRY
Location of Incident: VISALIA, CA
NHTSA Summary:
IN NOVEMBER 2003 VEHICLE EXPERIENCED SUDDEN ACCELERATION. TWO MONTHS LATER, ONCE AGAIN WHILE DRIVING, VEHICLE EXPERIENCED SUDDEN ACCELERATION. DEALER INDICATED BOTH TIMES THAT NOTHING WAS WRONG WITH THE VEHICLE. *AK
Additional Summary:

Toyota ID No:
NHTSA ODI No: 10065859
Date of Incident: 20040122
Vehicle: 2002 TOYOTA CAMRY
Location of Incident: CAMARILLO, CA
NHTSA Summary:
WITNESSES SAW MY PARENTS VEHICLE (A 2002 TOYOTA CAMRY) COMING TO A STOP AND THEN SUDDENLY ACCELERATE.*AK
Additional Summary:

Toyota ID No:
NHTSA ODI No: 10060870
Date of Incident: 20040122
Vehicle: 2003 TOYOTA COROLLA
Location of Incident: TRENTON, NJ
NHTSA Summary:
MY 2003 TOYOTA COROLLA EXPERIENCED A SUDDEN ACCELERATION PROBLEM TWICE. THE LOCAL TOYOTA DEALER AND TOYOTA'S FIELD TECHNICAL SPECIALIST REFUSED TO BELIEVE THE CAR WOULD HAVE ACCELERATED BY ITSELF UNLESS I HAD PRESSED THE ACCELERATOR. SO WAY!!! THEY SAID IT WAS IMPOSSIBLE FOR THE CAR TO HAVE PICKED UP SELF-ACCELERATION. THEY WERE UNABLE TO PINPOINT ANY PROBLEM. THIS IS A VERY DANGEROUS SITUATION. I WAS LUCKY NOBODY WAS HURT OR KILLED.
Additional Summary:

Toyota ID No:
NHTSA ODI No: 10120080
Date of Incident: 20040128
Vehicle: 2002 TOYOTA CAMRY
Location of Incident: DAYTON, TN
NHTSA Summary:

DT: THE CONSUMER'S VEHICLE ACCELERATED SUDDENLY AND RESULTED IN AN ACCIDENT ON JAN 28, 04 WHICH TOTALED THE VEHICLE. THE FIRST TIME THE GAS PEDAL BECAME STUCK WAS NOV. 03. THAT TIME THE PROBLEM WAS REPAIRED AND THE CONSUMER WAS CHARGED FOR THE REPAIRS. THIS PROBLEM IS UNDER INVESTIGATION WITH NHTSA. *NM
Additional Summary:

Toyota ID No:
NHTSA ODI No: 10056060
Date of Incident: 20040128
Vehicle: 2000 TOYOTA CAMRY
Location of Incident: WAUKEGAN, IL
NHTSA Summary:
WHILE DRIVING CONSUMER APPLIED THE BRAKES AND VEHICLE SUDDENLY ACCELERATED. CONSUMER WAS UNABLE TO MAINTAIN CONTROL OF THE VEHICLE, AND IT HIT ANOTHER VEHICLE HEAD ON. UPON IMPACT, BOTH AIRBAGS DID NOT DEPLOY. CONSUMER HAD VEHICLE TOWED TO REPAIR SHOP, BUT MECHANIC WAS NOT ABLE TO DUPLICATE THE PROBLEM.*AK
Additional Summary:

Toyota ID No:
NHTSA ODI No: 10259634
Date of Incident: 20040128
Vehicle: 2004 TOYOTA CAMRY
Location of Incident: SEA CIRT, NJ
NHTSA Summary:
1/28/04, I WAS PULLING HEAD ON, AT A LOW RATE OF SPEED, ALMOST A CRAWL, INTO A PARKING SPACE, IN FRONT OF A BUSINESS AND THE CAR "JUMPED" OR SURGED FORWARD. MY FOOT WAS OFF THE BRAKE AND THE ACCELERATOR WHEN THIS OCCURRED. THE CAR HIT THE BUILDING. 1/11/05, I WAS PULLING HEAD ON INTO A PARKING SPACE IN A PARKING LOT, AT A LOW RATE OF SPEED, WHEN THE CAR "JUMPED" OR SURGED FORWARD. THE CAR HIT A TREE IN FRONT OF ME. *TR
Additional Summary:

Toyota ID No:
NHTSA ODI No: 10064956
Date of Incident: 20040129
Vehicle: 2003 TOYOTA CAMRY
Location of Incident: ROBINHET PARK, CA
NHTSA Summary:
VEHICLE SUDDENLY ACCELERATED AND BRAKES DIDN'T RESPOND WHEN PRESSED. OVAR1 *PH *CB
Additional Summary:

Toyota ID No:
NHTSA ODI No: 10057389
Date of Incident: 20040141
Vehicle: 2003 TOYOTA TACOMA
Location of Incident: GILROY, CA
NHTSA Summary:

AS SOON AS THE CONSUMER STARTED THE VEHICLE THE RPM'S REVVED EXTREMELY HIGH AND THE VEHICLE LUNGED FORWARD. THE VEHICLE WAS TAKEN TO THE DEALER WHO REPLACED THE THROTTLE ACTUATOR CONTROL MOTOR THREE TIMES IN AS MANY DAYS. THE MANUFACTURER WILL BE INFORMED OF THE PROBLEM. *NM
Additional Summary:

Toyota ID No: 20040320235
NHTSA ODI No:
Date of Incident: 20040209
Vehicle: 2002 TOYOTA, LEXUS ES300
Location of Incident: ROCKVILLE, MD
NHTSA Summary:
*** PHONE LOG 03/12/2004 08:56:03 AM ACAMPBELL REFER TO CASE#20031112015I. CUST STS SHE IS CURRENTLY DRIVING AN UNSAFE VEH. CUST STS SHE IS RESPONSIBLE FOR PETITION THAT INITIATED THE NHSBA CAMPAIN FOR THE ES300. CUST STS SHE WROTE A LETTER TO DCI EMMONS ADDRESSING ISSUES THAT WERE SUBSEQUENT TO VEH ACCIDENT AND CUST RECEIVED A GRAMATICALLY INCORRECT RESPONSE FROM LCS THAT WAS INSULTING AND DID NOT ADDRESS HER ISSUES. CUST STS SHE SENT DOCUMENTATION TO LCS RE: 1 WEEK'S COST OF RENTAL VEH CHARGES POST ACCIDENT. *** NOTES 03/12/2004 08:59:51 AM ACAMPBELL CUST STS LTR DID NOT ADDRESS CONCERNS W/ COST AND ONLY MENTIONED VEH INSPECTION. CUST STS SHE HAS INCURRED ADDITIONAL VEH RENTAL CHARGES, TOWING FEES, LOSS OF WAGES, AND AN INSURANCE DEDUCTIBLE. CUST FEELS SHE IS ENTITLED TO REIMB FOR THESE COSTS AND WILL FAX DOCUMENTATION TO 310-337-4892. CUST ALSO FEELS SHE SHOULD BE COMPENSATED BY LEXUS FOR PUNITIVE DAMAGE AND WOULD LIKE HER VEH TO BE REPLD. *** NOTES 03/15/2004 08:42:21 AM ACAMPBELL CUST STS SHE TOOK VEH TO DLR ON 2/20 BC VEH EXPERIENCED AN EPISODE OF SURGING IN THE VEH. CUST STS SHE HAS BEEN CONTACTED BY LOCAL NEWSPAPERS AND FEELS LEXUS SHOULD RECOGNIZE HER CONCERNS AND TAKE ACTION. CUST WILL FAX DOCUMENTATION AND REQ RESPONSE FROM LCS RE THESE CONCERNS. *** COMMIT 03/12/2004 01:29:28 PM AWU1 ACTION TYPE: CUSTOMER. *** COMMIT 03/10/2004 10:16:06 AM AWU1 ACTION TYPE: CUSTOMER.
Additional Summary:

Toyota ID No: 20040218101
NHTSA ODI No:
Date of Incident: 20040200
Vehicle: 2002 TOYOTA, LEXUS CAMRY, CAMRY SOLARA, ES300
Location of Incident: TYLER, TX
NHTSA Summary:
*** PHONE LOG 02/10/2004 01:04:05 PM MMCKNIGHT CUST STS SHE TOOK VEH TO DLR ON 1/29/04 FOR THE ECM UPDATE. CUST STS THAT WHEN SHE GOES TO PULL OUT THE VEH WILL STOP SOMETIMES. CUST ALSO STATES THAT SOMETIMES WHEN ACCELERATING THE VEH WILL TAKE OFF. CUST FEELS THAT THIS IS VERY DANGEROUS & WANTS TO KNOW WHAT TO DO ABOUT. CUST HAS NOT TAKEN TO BACK TO DLR. *** CASE CLOSE 02/10/2004 01:04:17 PM MMCKNIGHT ADV CUST TO TAKE TO DLR FOR INSPECTION & ASSIST. ADV I WILL DOCUMENT CONCERNS & TO CALL BACK IF NECESSARY. CUST SATIS, NO FURTHER ASSIST REQ.
Additional Summary:

Toyota ID No: 20040516125I
NHTSA ODI No:
Date of Incident: 20040200

Vehicle: 2003 TOYOTA, LEXUS CAMRY, CAMRY SOLARA, ES300
Location of Incident: LAS VEGAS, NV
NHTSA Summary:
*** PHONE LOG 03/15/2004 03:16:08 PM PARENT CUST HAS HAD A POWER SURGE THAT CAUSED AN ACCIDENT ABOUT A MONTH AGO. CUSTATED THAT IT WAS A WET DAY AND SHE DROVE A MILE AND WENT INTO HER GARAGE AND PUT HER FOOT ON THE BRAKE AND SHE RAN INTO A PIECE OF FURNITURE. CUST STD THAT THE VEH SURGED ON HER. CUST WAS CALLING TO INQUIRE ABOUT THE MEDIA RELEASE ABOUT THE ENGINE SURGING. CUST THOUGHT AT FIRST THAT IT WAS BECAUSE HER FEET WERE WET AND SLIPPERY. VEH HAD EITHER SER OR SIS OF DAMAGE ON IT. *** SUBCASE 20040316129-1 CREATED 03/16/2004 03:16:20 PM PARENT *** PHONE LOG 03/16/2004 03:18:49 PM PARENT ACTION TYPE: INCOMING CALL SPOKE TO KRISTI PAULSON, WESTERN AREA AND SHE ADV THAT SINCE VEH WAS RPRD THE PR CANNOT BE DONE SHE ADV TO LET CUST KNOW THE INFO ON THE SURGING ISSUE AND IF ANYTHING HAPPENS SHE WILL BE NOTIFIED. *** PHONE LOG 03/16/04 04:09:11 PM EFAULIS/N10 ACTION TYPE: OUTGOING CALL PHONE CALL TO A PARENT. I ADV I WAS UNSURE WHY CASE WAS DISPATCHED TO LWA OR IF IT WAS DONE ON ACCIDENT SINCE THERE WERE NO NOTES OR DOCUMENTATION AS TO WHAT WE WERE TO DO WITH IT. SHE ADV THAT CUST WAS CONCERNED THAT HER VEH MIGHT BE INVOLVED IN SURGE ISSUE. I ADV THE ACCIDENT HAPPENED A MONTH AGO. VEH IS REDARSED AND BY CUST'S OWN ADMISSION, FOOT WAS WET AND COULD HAVE SLIPPED OFF BRAKE PEDAL. I ADV THAT WE WOULD NOT INSPECT VEH. I ADV THAT SHE SHOULD INFORM CUST THAT NHTSA IS INVESTIGATING AND WE ARE COOPERATING AND IF THERE IS SOMETHING THAT COMES OUT OF THE INVESTIGATION, CUSTOMERS WOULD BE INFORMED, BUT AT THIS TIME THERE IS NOTHING FURTHER TO DO. *** PHONE LOG 03/18/2004 10:58:29 AM EFAREND ACTION TYPE: OUTGOING CALL CALLED CUST AND ADV THAT WE WOULD NOT INSPECT VEH. I ADV THAT SHE SHOULD INFORM CUST THAT NHTSA IS INVESTIGATING AND WE ARE COOPERATING AND IF THERE IS SOMETHING THAT COMES OUT OF THE INVESTIGATION, CUSTOMERS WOULD BE INFORMED, BUT AT THIS TIME THERE IS NOTHING FURTHER TO DO. CUST ASKED IF SHE SHOULD HAVE IT CHECKED WHEN SHE GOES TO HER
Additional Summary:

Toyota ID No: 20040210297
NHTSA ODI No:
Date of Incident: 20040200
Vehicle: 2002 TOYOTA, LEXUS CAMRY, CAMRY SOLARA, ES300
Location of Incident: PALM BEACH GARDENS, FL
NHTSA Summary:
*** PHONE LOG 03/23/2004 08:35:24 AM BBRIEDE
----FCRP----
VALERIE SAALBACH CALLING ON BEHALF OF MOTHER; STATES HER MOTHER WAS INVOLVED IN AN ACCIDENT ABOUT A MONTH AGO. CUST STS SHE WAS A PASSENGER (WOMAN NAMED RENATA WAS DRIVING) AND WHEN BACKING OUT OF THE DRIVEWAY THE VEH SUDDENLY ACCELERATED FORWARD INTO A TREE. STS AIR BAG DEPLOYED AND MOTHER SUFFERED BROKEN RIBS AND CRACKED COLLAR BONE. STS BOTH WEARING SEAT BELTS. NCR APOL & EDUCATED CUST ON NHTSA INVESTIGATION. CUST FEELS VEH ACCELERATED ON ITS OWN >>>
*** NOTES 03/23/2004 08:38:51 AM BBRIEDE
CONT >>>> AND REQUESTS INSPECTION. CUST UNDERSTANDS 60-DAY FCRP PROCESS. LEGAL REQUESTS FIELD REPORT WITH MANY INTERIOR AND EXTERIOR PHOTOS
*** NOTES 03/24/04 05:01:10 AM SETZ
CASE ASSIGNED TO LAUREN
*** NOTES 03/25/04 01:28:51 PM SETZ10

CRC SPK TO CUST. CUST STS VEH IS CURRENTLY AT BODY SHOP, BUT REPAIRS MAY BE COMPLETE ON 3/26. CRC EXPL THAT IF VEH IS REPAIRED 3/26, AN APPOINTMENT WOULD HAVE TO BE SCHEDULED FOR INSPECTION. CUST STS SHE WILL SPK WITH BODY SHOP TO GET MORE INFO AND CALL BACK. CRC. CRC WILL AWAIT CALL BACK FROM CUST WITH MORE INFO.
Additional Summary:

Toyota ID No:
NHTSA ODI No: 10173425
Date of Incident: 20040201
Vehicle: 2003 TOYOTA COROLLA
Location of Incident: WEST PALM BEACH, FL
NHTSA Summary:
DT*. THE CONTACT STATED WHILE SLOWING DOWN BEHIND ANOTHER VEHICLE, IT WOULD NOT SLOW DOWN SO THE VEHICLE WAS PUT IN TO NEUTRAL. THE ENGINE REVVED UP. THE GEARS WERE THEN PUT INTO DRIVE AND FINALLY THE ENGINE SLOWED DOWN. THE VEHICLE WAS TAKEN TO THE DEALERSHIP TO BE CHECKED. UPON INSPECTION THE PROBLEM WAS DETERMINED TO BE THE THROTTLE BODY HAD STUCK. THE VEHICLE WAS DRIVEN FOR A SHORT AMOUNT OF TIME BEFORE EXPERIENCING THE SAME TYPE PROBLEMS. THE DEALER SAID IT COULD HAVE BEEN THE FLOOR MAT GETTING UNDER THE ACCELERATOR PEDAL. THE VEHICLE IS STILL HAVING THE SAME TYPE OF PROBLEMS. THE MANUFACTURER HAS BEEN ALERTED. UPDATED 4/6/2004 - *NM
Additional Summary:

Toyota ID No:
NHTSA ODI No: 10063139
Date of Incident: 20040202
Vehicle: 2003 TOYOTA CAMRY
Location of Incident: MANCHESTER, NY
NHTSA Summary:
CONSUMER STATED THE BRAKES LOCKED WHEN HE ATTEMPTED TO STOP AT A TOLL BOOTH. THIS CAUSED A REAR END COLLISION. UPON IMPACT, AIR BAGS DID NOT DEPLOY. CONSUMER SUSTAINED A BRUISED CHEST, AND CONSUMERS WIFE SUSTAINED 2 TWO BROKEN RIBS. CONSUMER STATED THAT WHEN HE HIT THE VEHICLE IN FRONT IT WAS AS IF THE VEHICLE ACCELERATED, AND EVENTHOUGH HE HAD KEPT ON THE BRAKES, VEHICLE KEPT GOING. HE STATES THAT HE PUSHED THE VEHICLE IN FRONT OF HIM, IMMEDIATELY CUT THE IGNITION OFF, PUT ON EMERGENCY BRAKES, AND COASTED TO THE SIDE OF THE ROAD. VEHICLE CAME TO A STOP ON THE SHOULDER. HE SAYS THAT THE ONLY THING THAT SAVED HE AND HIS WIFE WAS THE SEAT BELTS. CONSUMER STATED HE SAW ON TV THAT TOYOTA WAS RECALLING 2002-2003 CAMRYS FOR EXCESSIVE ACCELERATION. *AK *SC *JB
Additional Summary:

Toyota ID No: 20030204094
NHTSA ODI No:
Date of Incident: 20040204
Vehicle: 2003 TOYOTA, LEXUS ES300
Location of Incident: GLEN RIDGE, NJ
NHTSA Summary:
*** PHONE LOG 02/04/2004 02:20:20 PM SFURIKAWA DOM ANDY OVIATT CALLED TO ADV THAT HE HAPPENED TO INSPECT CUST'S '04 ES 300 AT PRESTIGE LEXUS FOR A CONCERN W/ THE ACCELERATOR PEDAL TODAY. DOM ADV THAT CUST WILL BE CALLING LCS

ABOUT UNINTENTIONAL ACCELERATION. *** COMMIT 02/04/2004 02:20:37 PM SFURIKAWA ACTION TYPE: CUSTOMER *** FULFILL 02/05/2004 08:20:44 PM SFURIKAWA ACTION TYPE: CUSTOMER *** COMMIT 02/05/2004 08:20:57 PM SFURIKAWA ACTION TYPE: CUSTOMER *** FULFILL 02/09/2004 04:34:07 PM SFURIKAWA ACTION TYPE: CUSTOMER *** CASE CLOSE 02/09/2004 04:34:59 PM SFURIKAWA WAITED FOR CUST TO CALL. NO CALL CAME IN CASE CLOSED
Additional Summary:

Toyota ID No:
NHTSA ODI No: 10064002
Date of Incident: 20040205
Vehicle: 2002 TOYOTA CAMRY
Location of Incident: NEW YORK, NY
NHTSA Summary:
WHILE MAKING A TURN FROM A STOP SIGN, THE ACCELERATOR PEDAL DESCENDED TO MORE THAN THE DRIVER HAD DEPRESSED, WHICH CAUSED THE CONSUMER TO LOSE CONTROL OF THE VEHICLE AND SUBSEQUENTLY HITTING A PALM TREE HEAD ON. THE PASSENGER SUSTAINED INJURIES. ANN SAALBACH'S DAUGHTER. CALERIE SAALBACH ISSUED THIS INFORMATION. PLEASE PROVIDE DETAILS.
Additional Summary:

Toyota ID No:
NHTSA ODI No:
Date of Incident: 20040205
Vehicle: 2002 TOYOTA CAMRY
Location of Incident: HOWIE, MD
NHTSA Summary:
Toyota Camry 2002 Model: Sudden Acceleration Problem A sudden acceleration problem happened to my Toyota Camry 2002 model on February 5, 2004, when I was going to my office around 7:10 AM. As I was coming to a complete stop at the 1st Stop sign in my neighborhood, and just a few seconds before I was to take a left turn at the intersection, suddenly my car made some noise and accelerated by itself and started zooming fast and went straight ahead. I pressed the break, but it didn't work, and then I put the car on neutral, it didn't work, and then pulled the hand break and even that did not stop the car. The car continued its race for about a quarter mile and finally I had to dash it against a snow bank in the front yard of a house in the cul de sac. Fortunately, there were no persons or cars in the street. Otherwise, when the car was going out of control at such a speed, it could have hit someone. Caution, luckily, there was no injury for me, and there was no damage to the car either. Later in the afternoon I towed the car to the nearest Toyota dealer and after they inspected the car, they told me that there was no malfunctioning in the car. They refused to believe that the car would have accelerated by itself unless I had pressed the gas. They said, it is impossible for the car to have pulled up self acceleration. I am absolutely sure that I did not press the gas by mistake. Why should I keep on pressing the gas for about a quarter mile, when my intention is to stop the car and save my life and others' lives too? I have taken up the matter with the Toyota's product liability department. And they said they will get the car inspected once again. But my concern is that, there is no guarantee that the car will not behave erratically again in the future, even though Toyota mechanics are not able to pinpoint this problem.
Additional Summary:

Toyota ID No:
NHTSA ODI No: 10079871
Date of Incident: 20040207
Vehicle: 2004 TOYOTA 4RUNNER
Location of Incident: RENO, NV

NHTSA Summary:
PROBLEMS WITH THE BOTTOM OF THE SEATS MOVING AROUND AS IF NOT IN THE LOCKED POSITION. THE VEHICLE ACCELERATED UP TO 3 MPH ALTHOUGH THE CONSUMER'S FOOT WAS NOT ON THE ACCELERATOR. AT TIMES WHILE SHIFTING FORM DRIVE TO NEUTRAL AND THEN REVERSE, THE ENGINE COULD BE HEARD REVVING UP THEN THE VEHICLE WOULD JERK BACKWARDS. THE VEHICLE WAS TAKEN TO A LOCAL DEALER WHO TEST DROVE THE VEHICLE. THE TECHNICIAN CONCLUDED THAT THE VEHICLE WAS PERFORMING AS DESIGNED AND REFUSED TO PROVIDE FURTHER ASSISTANCE. *NM
Additional Summary:

Toyota ID No:
NHTSA ODI No: 10062702
Date of Incident: 20040209
Vehicle: 2003 LEXUS ES300
Location of Incident: COLUMBUS, GA
NHTSA Summary:
AUTO ACCELERATED UNEXPECTEDLY CAUSING ACCIDENT, STRIKING A BUILDING. *SB
SEE VOQ 10061793. *DST
Additional Summary:

Toyota ID No:
NHTSA ODI No: 10219663
Date of Incident: 20040208
Vehicle: 2003 LEXUS ES300
Location of Incident: RICHMOND, VA
NHTSA Summary:
WHEN MAKING AN LOW TURN, AT UNDER 5 MILES PER HOUR IF THE ACCELERATOR IS DEPRESSED THERE IS A SIGNIFICANT LAG BEFORE THE CAR REACTS AND MOVES. DEALER CLAIMS THAT IS THE WAY IT IS AN CANT FIX IT. ALSO HAPPENED WITH A 2007 LEXUS ES 350 AS A DEALER LOANER AND THIS TIME RESULTED IN AN ACCIDENT WITH $1,700 DAMAGE TO LEXUS. *TR
Additional Summary:

Toyota ID No:
NHTSA ODI No: 10039795
Date of Incident: 20040211
Vehicle: 2000 TOYOTA CAMRY
Location of Incident: WOBURN, MA
NHTSA Summary:
WHILE DRIVING UP HILL FROM A STOP THROTTLE STUCK, MAKING IT HARD FOR CONSUMER TO DECELERATE. THE DEALERSHIP WAS NOTIFIED, BUT DID NOT RESOLVE THE PROBLEM. *AK
Additional Summary:

Toyota ID No:
NHTSA ODI No: 10064225
Date of Incident: 20040212
Vehicle: 2003 TOYOTA CAMRY
Location of Incident: CATONSVILLE, MD
NHTSA Summary:

THERE HAVE BEEN A NUMBER OF INCIDENCES OF POSSIBLE UNEXPLAINED ACCELERATION OF MY 2003 CAMRY, WHERE CAR SEEMS TO SURGE FORWARD WITHOUT ME DOING ANYTHING.*AK
Additional Summary:

Toyota ID No:
NHTSA ODI No: 10043095
Date of Incident: 20040214
Vehicle: 2003 TOYOTA CAMRY
Location of Incident: DOWNERS GROVE, IL
NHTSA Summary:
THE CONSUMER EXPERIENCED SUDDEN ACCELERATION UPON MAKING A RIGHT TURN INTO A PARKING SPACE. THE VEHICLE HIT A CONCRETE WALL. THIS FAILURE ALSO OCCURRED WHILE TURNING RIGHT ONTO A MAIN STREET. *AK. THE FAILURE OCCURRED ON ANOTHER OCCASION, BUT THERE WAS NO COLLISION AS THE CONSUMER ATTEMPTED TO ACCELERATE TO MOVE UP BEHIND ANOTHER VEHICLE AT A RED LIGHT. THE VEHICLE ATTEMPTED TO ACCELERATE BY ITSELF. THE CONSUMER IMMEDIATELY BRAKED TO STOP THE VEHICLE. *SC *JB
Additional Summary:

Toyota ID No:
NHTSA ODI No: 10054176
Date of Incident: 20040214
Vehicle: 2001 TOYOTA PRIUS
Location of Incident: SAN JOSE, CA
NHTSA Summary:
THE 2001 TOYOTA PRIUS HAS A FAULTY ACCELERATOR PEDAL AND SHOULD BE COVERED UNDER THE 8-YEAR HYBRID SYSTEM WARRANTY. NOT ONLY ARE THERE SAFETY ISSUES WITH THIS PROBLEM (E.G. SUDDEN LOSS OF ACCELERATION THAT COULD CAUSE ACCIDENTS, INCORRECT COMMUNICATION BETWEEN THE ACCELERATOR AND THE HYBRID SYSTEM, ETC.) BUT THERE IS A LACK ON TOYOTA'S PART TO ADMIT THAT THE ACCELERATOR IS A CRITICAL COMPONENT OF THE HYBRID SYSTEM. WHEN THE ACCELERATOR FAILS, IT CAUSES THE "CHECK HYBRID SYSTEM" LIGHT TO APPEAR ON THE DASHBOARD AND CAN MAKE THE CAR DANGEROUSLY UNRESPONSIVE (ESPECIALLY ON THE FREEWAY). THE HYBRID SYSTEM IS EXPECTING INFORMATION FROM THE ACCELERATOR, AND WHEN IT DOESN'T RECEIVE IT, EITHER THE GAS ENGINE, OR THE ELECTRIC ENGINE, OR BOTH ENGINES FAIL TO OPERATE. EVEN THOUGH TWO TOYOTA DEALERS (STEVENS CREEK TOYOTA AND CAPITOL TOYOTA) AGREE THAT THIS IS A SERIOUS SAFETY ISSUE, BOTH CLAIM THAT THIS REPAIR IS NOT COVERED UNDER THE 8-YEAR HYBRID SYSTEM WARRANTY. HOWEVER, IF THIS ACCELERATOR PROBLEM IS NOT DIRECTLY RELATED, THEN WHY DOES THE WARNING LIGHT COME ON WHEN THE ACCELERATOR SENSOR FAILS? ALSO, WHY DID THE DEALER WHO PERFORMED THE $684.32 REPAIR TELL ME THAT THE COMPLETE ACCELERATOR ASSEMBLY PART HAD JUST BEEN RECENTLY REVISED BY TOYOTA? I MIGHT ADD THAT AN INDEPENDENT ELECTRICAL ENGINEER ANALYZED THE PART AND CONCLUDED THAT THE ACCELERATOR HAS AN MTBF OF 1500 HOURS. HE CONCLUDED THAT EVERY PRIUS OWNER WOULD BE SUBJECT TO THIS SAME HAZARDOUS PROBLEM SEVERAL TIMES DURING THE LIFETIME OF THE CAR(!). I HAVE SUBSTANTIAL EVIDENCE FROM OTHER PRIUS OWNERS WHO ARE EXPERIENCING THE SAME PROBLEMS AND WOULD BE HAPPY TO SHARE THIS INFORMATION WITH YOUR INVESTIGATION TEAM. IN MY OPINION, THESE PROBLEMS ARE SERIOUS ENOUGH TO MERIT CONSIDERATION FOR EITHER A RECALL OR A REVISION OF TOYOTA'S "HYBRID SYSTEM" WARRANTY POLICIES. I APPRECIATE ANY

ASSISTANCE YOU CAN PROVIDE ME IN THIS MATTER AND I HOPE THAT TOGETHER WE CAN PREVENT NEEDLESS DEATHS FROM THIS UNSAFE ACCELERATOR. *AK
Additional Summary:

Toyota ID No:
NHTSA ODI No: 10042774
Date of Incident: 20040213
Vehicle: 2001 TOYOTA AVALON
Location of Incident: DEERFIELD, IL
NHTSA Summary:
2001 TOYOTA AVALON SURGED FORWARD WITH THE ACCELERATOR STUCK IN THE DEPRESSED POSITION RESULTING IN A COLLISION WITH THREE PARKED CARS IN A BUSY MALL PARKING LOT. THANKS TO A SNOWBANK AND THE IMPACT OF HITTING THE THREE CARS, THE VEHICLE CAME TO A STOP WITHOUT INJURING THE DRIVER OR ANYONE ELSE. THE AIR BAGS ALSO DID NOT DEPLOY.*AK *MR
Additional Summary:

Toyota ID No:
NHTSA ODI No: 10040804
Date of Incident: 20040217
Vehicle: 2002 LEXUS GS300
Location of Incident: SACRAMENTO, CA
NHTSA Summary:
UNEXPECTED ACCELERATION. ON SEVERAL OCCASIONS, PRIMARILY WHILE STOPPED AT A TRAFFIC SIGNAL, MY VEHICLE WOULD LUNGE FORWARD. I TOOK IT TO THE DEALER AND WAS TOLD THEY HAD NO RECORD OF A PROBLEM OF THIS NATURE FOR THIS VEHICLE. THEY COULD NOT FIND ANYTHING WRONG. I SAW A ARTICLE ON THE INTERNET THAT THE NHTSA WAS INVESTIGATING SIMILAR PROBLEMS WITH OTHER TOYOTA PRODUCTS. *AK
Additional Summary:

Toyota ID No:
NHTSA ODI No: 10042338
Date of Incident: 20040218
Vehicle: 2004 TOYOTA CAMRY SOLARA
Location of Incident: HOPATCONG, NJ
NHTSA Summary:
I'M VERY CONCERN ABOUT MY 2002 TOYOTA CAMRY SOLARA VIN#1TCE22P22C912342 SINCE I NOTICED ON SEVERAL OCCASIONS RUNNING THE MOST RECENT ONE OF SOMETHING THAT CAUSES HIDDEN ACCELERATION EVEN WHEN IT READS SOMETHING DIFFERENT ON THE SPEEDOMETER. THANK YOU. RESPECTFULLY, LESLY GARCIA. *JB
Additional Summary:

Toyota ID No:
NHTSA ODI No: 10043017
Date of Incident: 20040219
Vehicle: 2002 LEXUS ES300
Location of Incident: POMPANO BEACH, FL
NHTSA Summary:
UPON PARKING IN A PARKING LOT VEHICLE SUDDENLY ACCELERATED FORWARD, WHEN THIS OCCURRED VEHICLE JUMPED THE CEMENT WHEEL BLOCK, AND WENT

THROUGH A COMPLEX BEFORE STOPPING. CONSUMER HAD TO APPLY EXCESSIVE FORCE TO THE BRAKE PEDAL TO STOP VEHICLE. *AK. VEHICLE WAS INSPECTED BY THE DEALER AND FOUND NOTHING WRONG WITH THE VEHICLE. *LA
Additional Summary:

Toyota ID No:
NHTSA ODI No: 10043741
Date of Incident: 20040222
Vehicle: 2004 TOYOTA CAMRY
Location of Incident: FAWLING, NY
NHTSA Summary:
AS I WAS PULLING INTO A PARKING SPACE WITH MY FOOT DEPRESSING THE BRAKE PEDAL, MY NEW (LESS THAN ONE MONTH OLD) TOYOTA CAMRY 2004 SURGED FORWARD AT A HIGH VELOCITY AND I HIT A BRICK WALL DAMAGING MY VEHICLE. INJURY: SPRAINED RIBS AND BRUISES TO CHEST AND KNEES. *AK
Additional Summary:

Toyota ID No:
NHTSA ODI No: 10079716
Date of Incident: 20040222
Vehicle: 2003 LEXUS ES300
Location of Incident: FORT LAUDERDALE, FL
NHTSA Summary:
WHEN THE CONSUMER LIFTED FOOT OF THE BRAKE PEDAL VEHICLE SUDDENLY ACCELERATED, AND HIT A WOMEN WHO WAS STANDING IN THE FRONT OF THE CONSUMER'S VEHICLE. THE WOMAN FRACTURED HER ANKLE AND ARMS. *AK
Additional Summary:

Toyota ID No:
NHTSA ODI No: 10060788
Date of Incident: 20040224
Vehicle: 2004 TOYOTA HIGHLANDER
Location of Incident: WATERTOWN, WI
NHTSA Summary:
SUDDEN ACCELERATION WHILE BRAKE WAS DEPRESSED. VEHICLE WENT UP A TWO FOOT EMBANKMENT AND THRU A CHAIN LINK FENCE. VEHICLE WAS STOPPED BY PLACING INTO PARK. THIS ALL HAPPENED WHILE BRAKE WAS DEPRESSED FULLY.
Additional Summary:

Toyota ID No:
NHTSA ODI No: 10062898
Date of Incident: 20040225
Vehicle: 2004 TOYOTA CAMRY
Location of Incident: IRVING, TX
NHTSA Summary:
- NEW TOYOTA CAMRY LE PURCHASED JANUARY 2004 - ON FEBRUARY 15TH KEY WOULD NOT TURN (TOOK 10 - 15 MINUTES TO START!!) - LATER WHILE DRIVING THE CAR THE STEERING LOCKED TURNING THE CAR TO THE RIGHT - THE CAR ACCELERATED AND SURGED DESPITE DEPRESSING THE BRAKE (SAME AS ODI PEO44241) - THOUGH THE CAR BROKE A METAL FLAG POLE, DAMAGED A RETAINING WALL, AND FELL SEVEN FEET INTO A MAJOR STREET, THE AIR BAGS DID NOT DEPLOY - CAR IS SEVERELY DAMAGED:

WHEELS, TIRES, FRONT END, GAS TANK, FRONT AXLE - DRIVER HAS A BROKEN AND BOTH KNEE ALONG WITH SIGNIFICANT SOFT TISSUE INJURIES INCLUDING BACK PAIN *SC *JB
Additional Summary:

Toyota ID No:
NHTSA ODI No: 10054185
Date of Incident: 20040225
Vehicle: 2000 LEXUS GS300
Location of Incident: NICHOLASVILLE, KY
NHTSA Summary:
WHILE MAKING A TURN FROM A STOP THE VEHICLE SUDDENLY ACCELERATED. THE CONSUMER APPLIED THE BRAKES BUT THE VEHICLE HAD EXTENDED STOPPING DISTANCE. THE DEALERSHIP WAS NOTIFIED BUT DID NOT RESOLVE THE PROBLEM. PLEASE PROVIDE MORE INFORMATION. *NM
Additional Summary:

Toyota ID No:
NHTSA ODI No: 10060036
Date of Incident: 20040227
Vehicle: 2001 LEXUS ES300
Location of Incident: DARIEN, IL
NHTSA Summary:
ON THREE SEPARATE OCCASIONS WITHIN PRIOR THREE MONTHS OF INCIDENT DATE, WHEN TAPPING ACCELERATOR TO THE FLOOR BRIEFLY (FRACTION OF A SECOND) AND THEN RELEASING, CARS THROTTLE REMAINED COMPLETELY OPEN (MAXIMUM RPMS) EVEN WITH FOOT OFF OF THE ACCELERATOR PEDAL. CARS THROTTLE SYSTEM EQUIPPED WITH "DRIVE BY WIRE" OR A WIRELESS COMPUTER CONTROLLED THROTTLE. ON PRIOR TWO OCCASIONS, VEHICLE'S IGNITION HAD TO BE SHUT OFF BY REMOVING KEYS FROM IGNITION WHILE DRIVING IN THE MIDDLE OF THE STREET. ON THIRD OCCASION, DUE TO TRYING TO AVOID OBSTACLE DRIVER HAD NO TIME TO SHUT CAR OFF. CAR STRUCK ROCKS AND VEERED OFF INTO LAKE. CAR TOTALED. *JB
Additional Summary:

Toyota ID No:
NHTSA ODI No: 10061111
Date of Incident: 20040228
Vehicle: 2000 TOYOTA CAMRY
Location of Incident: WESTERLY, RI
NHTSA Summary:
WHEN APPROACHING A PARKING SPACE, THE DRIVER PRESSED THE BRAKE PEDAL AND THE VEHICLE ACCELERATED. THE VEHICLE CRASHED INTO A STORE WINDOW. VEHICLE WAS TAKEN TO THE DEALER. *AK *JB THE CONSUMER CONTACTED THE MANUFACTURER WHO REPLIED BY SAYING THAT THE INCIDENT WAS NOT THE RESULT OF ANY TYPE OF MANUFACTURER DESIGN OR DEFECT. THE MANUFACTURER WANTS TO CLOSE THE CASE. *NM
Additional Summary:

Toyota ID No: 20040030629
NHTSA ODI No:
Date of Incident: 20040300

Vehicle: 2002 TOYOTA, LEXUS CAMRY
Location of Incident: LAKESVILLE, MA
NHTSA Summary:
*** PHONE LOG 03/30/2004 10:24:20 AM MGARCIA
03 CAMRY . CUST STS SHE ON INTERNET REGARDING A SAFETY ISSUE THAT VEH ACCELERATES WHEN COMING TO A STOP (ENG SURGES). CUST STS SHE HAS HAD THIS CONCERN W/HER VEH AROUND A YR AGO. CUST STS DLR ADJUSTED HER BRAKES AT THAT TIME. CUST STS NOW VEH IS BACK AT DLR FOR SAME CONCERN. CUST SKE TO DOC

*** CASE CLOSE 03/30/04 10:03:39 AM DLR20125
CUST CAME IN AND ASKED TO HAVE HER BRAKES CLEANED AND ADJUSTED-WE DID DO THIS -PROBLEM IS INTERMITTENT SO WE DON'T KNOW IF THIS WILL HAPPED AGAIN

Additional Summary:

Toyota ID No: 20040319141
NHTSA ODI No:
Date of Incident: 20040100
Vehicle: 2002 TOYOTA, LEXUS CAMRY
Location of Incident: PLANTATION, FL
NHTSA Summary:
*** PHONE LOG 03/31/2004 07:30:03 AM ECAMPOS
===RS=== NO PRIN CASE
CUST STS OWNS 03 CAMRY W/35K MI. STS VEH HAVING SMELL ISSUE. STS DLR HAVE REPLACED FILTER BUT VEH STILL SMELLS. CUST STS SENSITIVE TO SMELL. STS VEH SMELLS LIKE DIRTY SOXS & CHEMICALS. STS SMELLS COMES FROM A/C. STS DLR ADV IS DUE TO WEATHER & WILL NOT BE ABLE TO FIX ISSUE. STS SPOKE TO CRM CAROL WHO ADV HAVE DONE ENOUGH. STS VEH ALSO SURGES WHEN APPLYING BRAKES.

Additional Summary:

Toyota ID No: 20040318979
NHTSA ODI No:
Date of Incident: 20040100
Vehicle: 2002 TOYOTA, LEXUS CAMRY SOLARA
Location of Incident: LOMBARD, IL
NHTSA Summary:
*** PHONE LOG 03/19/2004 02:02:52 PM PTIMBERLAKE
===FCRP===CUST STS HE WAS PULLING INTO A PARKING SPOT WHEN VEH ACCELERATED BY ITSELF. STS FRONT END OF HIS SOLARA ENDED UP ON TOP OF ANOTHER VEH. STS BODYWORK HAS BEEN COMPLETE BUT ACCELERATION PROBLEM NOT FIXED. CUST WANTS TO KNOW WHY ACCELERATED BY ITSELF. LEGAL REQUESTS FCRP WITH MANY INTERIOR/EXTERIOR PHOTOS

*** CASE CLOSE 03/22/04 07:46:21 AM CHI5
CUSTOMER CONTACTED SPOKE TO WIFE AND HUSBAND. CUSTOMER HAVING PROBLEM WITH PHONE. CALLED THREE TIMES TO ADVISE WE ACKNOLWEDGE CASE AND WILL HAVE REP CONT. FOR INSPECTION.
Additional Summary:

Toyota ID No: 20040311319
NHTSA ODI No:

Date of Incident: 20040300
Vehicle: 2002 TOYOTA, LEXUS CAMRY, CAMRY SOLARA, ES300
Location of Incident: MUNISING, MI
NHTSA Summary:
*** PHONE LOG 03/11/2004 04:09:06 PM LESPINOZA
===FCRP===CUST WIFE STS HUSBAND WAS DRIVING INTO THE CARWASH GOING LESS THAT 5 MPH. STS FOOT WAS OFF THE GAS PEDAL. STS VEH MADE A LOUD SOUND AND "ZOOMED" FORWARD ACROSS THE HIGHWAY INTO A SNOW BANK. CUST STS WORE SEAT BELT. CUST STS BODY SHOP IS REPAIRING BODY DAMAGE. STS NO MECHANICAL ISPES. CUST STS HEARD ABOUT SURGE INVESTIGATION AND SKS INSPECTION. LEGAL REQUEST FIELD CONTACT REPORT W/ MANY INTERIOR PHOTOS.

*** RESEARCH LOG 03/12/04 11:33:08 AM CIN1 ACTION TYPE: ADMINISTRATIVE TASK
SENT EMAIL TO LESPINOZA:
THE REGION CONTACTED THE CUSTOMER WHO STATED HE DID NOT ASK TO HAVE THE AIRBAGS INSPECTED. HE WANTS TO KNOW WHY THE VEHICLE SUDDENLY SURGED FORWARD THAT CAUSED AN ACCIDENT. THE VEHICLE IS CURRENTLY AT A BODY SHOP BEING REPAIRED. PLEASE REVISE "CUSTOMER SEEKS" AND CLARIFY EXACTLY WHAT ACTION THE REGION SHOULD TAKE CONSIDERING THE RECENT ANNOUCEMENT THAT THERE IS AN ONGOING INVESTIGATION CONCERNING SUDDEN ACCELERATION. WHAT IS THE POSITION? THE CUSTOMER IS REQUESTING A CALL BACK FROM THE REGION.
*** NOTES 03/15/04 06:44:04 AM CIN1
REGION TRANSFERRING CASE TO CHICAGO REGION. CUSTOMER LIVES IN MUNISING, MI AND DEALER IS RIVERSIDE IN MARQUETTE, MI. LEFT MSG FOR NORENE VACURA IN CHICAGO TO CALL JOANN JOHNSON IN CINCINNATI REGION IF FURTHER INFORMATION IS NEEDED.
*** NOTES 03/15/04 09:01:54 AM CHI5
REGION GRABBED CASE FROM CINCINNATI REGION AND GAVE COPIES OF FILE TO STS. REGION CALLED CUSTOMER AND SPOKE TO WIFE AND ADVISED THAT AS SOON AS REP. WILL BE AVAILABLE IN MUNSING, MICH. WE WILL CONTACT AND ADV. OF INSPECTION DATE.

*** CASE CLOSE 03/15/04 08:55:47 AM CHI5
FILE GIVEN TO FTS AND INFORMATION ALSO SENT TO FTS. FILE WILL BE UPDATED AFTER FTS INSPECTION REC'EIVED. SEE FCRP FOND FILE FOR FURTHER INFORMATION.
Additional Summary:

Toyota ID No: 20040320039
NHTSA ODI No:
Date of Incident: 20040300
Vehicle: 2002 TOYOTA, LEXUS CAMRY, CAMRY SOLARA, ES300
Location of Incident: ROCKVILLE, MD
NHTSA Summary:
*** PHONE LOG 03/12/2004 11:09:37 AM ABAKER
CUST STS VEH TO DLR FOR SURGE WHILE BRAKING. STS DLR ADV CUSTLDNT DO ANYTHING TO DIAG CONCERN. STS VEH WAS TRYING TO ACCELERATE WHILE SHE WAS BRAKING. CUST FLS VEH IS UNSAFE TO DRIVE. NCR SPOKE TO SVC DIRECTOR WHO ADV WILL WRITE UP RO & TRY TO VERIFY CONCERN. NCR ADV DLR CANT REPAIR UNLESS CONCERN CAN BE VERIFIED. CUST FLS TOYOTA SHOULD PROVIDE HER W/ ANOTHER VEH UNTIL CONCERD CAN BE VERIFIED. NCR ADV TOYOTA WILL NOT BE REPAIRING VEH OR PROVIDING LOANER UNTIL ===
*** NOTES 03/12/2004 11:09:37 AM ABAKER
<<<CONCERN CAN BE VERIFIED. CUST STS WILL REPORT CONCERN TO GOV, NCR PROVIDED CUST W/ NHTSA WEBSITE & PHONE #.

*** CASE CLOSE 03/13/2004 11:12:43 AM ABAKER
NCR APOL, ADV CONCERNS MUST BE VERIFIED BEFORE THEY CAN BE REPAIRED, ADV CUST OF NHTSA INFORMATION, GAVE REF #.
*** NOTES 03/12/04 12:15:00 PM CAT5
DEALER SM CALLED AND ADVISED CUSTOMER BROUGHT VEH TO DEALER FOR INSPECTION. DEALER UNABLE TO DUPLICATE CONDITION.
Additional Summary:

Toyota ID No: 20040315150
NHTSA ODI No:
Date of Incident: 20040200
Vehicle: 2002 TOYOTA, LEXUS CAMRY, CAMRY SOLARA, ES300
Location of Incident: BATON ROUGE, LA
NHTSA Summary:
*** PHONE LOG 03/15/2004 02:05:05 PM LESPINOZA
===FCRP===CUST STS WAS PULLING INTO A PART LOT GOING ABOUT 5-10 MPH. STS FOOT WAS OFF THE GAS PEDAL LETTING VEH COAST INTO THE PARKING SPACE. STS WAS ABOUT TO APPLY THE BRAKE WHEN THE VEHICLE SURGED FORWARD. STS HIT 2 VEHICLES PARKED IN THE PARKING LOT. CUST STS WORE SEAT BELT. CUST SEE VEH INSPECTED
*** NOTES 03/15/2004 02:36:31 PM LESPINOZA
LEGAL REQUESTS FIELD CONTACT REPORT W/ MANY INTERIOR, AND EXTERIOR PHOTOS.
*** NOTES 03/18/04 01:24:59 PM GST2
SPOKE TO CUST. ADVISED HER OUR REP WILL INSPECT VEH ON 3/24/04 FOR ACCIDENT CONCERN. VEH WILL BE REPAIRED ON 3/30/04 AND CUST'S RENTAL WILL EXPIRE. DSM HAS AGREED TO PAY FOR RENTAL UNTIL REP INSPECTS AND NOTIFIES CUST OF OUR FINDINGS.

*** CASE CLOSE 05/23/04 01:14:11 PM GST2
GST1CR. SPOKE TO CUST AND MADE ARRANGEMENTS TO HAVE FTS, BILL NEW INSPECTED VEH FOR SURGE FORWARD CONCERN ON 3/24/04. FTS FOUND VEH OPERATING AS DESIGNED AND INTENDED. BODY SHOP HAD FINISHED BODY REPAIRS AND DSM HAD AUTHORIZED RENTAL VEH FOR CUST TO STAY IN UNTIL FTS INSPECTION. FTS CONTACTED CUST AFTER HIS INSPECTION OF VEH AND ADVISED THAT VEH WAS FOUND TO BE OPERATING AS DESIGNED AND INTENDED. STS ADVISED CUST SHE NEEDED TO TURN IN RENTAL VEHICLE. CUST NOT SATISFIED, FEELS THERE IS PROBLEM WITH VEH AND WILL PROBABLY PURSUE. GST WILL ALSO SEND LTR TO CUST STATING OUR FINDINGS IN LETTER.

Additional Summary:

Toyota ID No: 20040316148
NHTSA ODI No:
Date of Incident: 20040300
Vehicle: 2002 TOYOTA, LEXUS CAMRY, CAMRY SOLARA, ES300
Location of Incident: St. OLMSTED, OH
NHTSA Summary:
*** PHONE LOG 03/26/2004 09:26:57 AM PTIMBERLAKE
===FCRP===CUST STS SHE WAS DRIVING AND APPLIED THE BRAKE AND VEH ACCELERATED BY ITSELF. STS HER VEH HIT THE VEHICLE IN FRONT OF HER BUT NO DAMAGE TO HER VEHICLE. CUST STS VEH HAS ACCELERATED 3 TIMES BY ITSELF. STS DLR - BATNSWICK TOYOTA - 34090 INSPECTED AND ADV NOTHING WRONG WITH VEH. CUST WANTS VEH

REPLACED AS SHE DOESN'T FEEL SAFE. LEGAL REQUESTS FCRP WITH MANY INTERIOR/EXTERIOR PHOTOS.

*** PHONE LOG 03/31/04 10:41:55 AM CIN1 ACTION TYPE: OUTGOING CALL
CUSTOMER STATES THAT DUE TO SUDDEN ACCELERATION HAD AN ACCIDENT IN JANUARY 2004 BUT DID NOT CALL CAC. STATES CALLED BRUNSWICK TOYOTA WHO TOWED VEHICLE TO DEALERSHIP AND INSPECTED. NO PROBLEM FOUND. STATES THAT THERE WAS NO DAMAGE TO OTHER VEHICLE OR HER VEHICLE. STATES THAT HER KIDS IS INJURED AS A RESULT OF ACCIDENT. CUSTOMER STATES AFRAID TO DRIVE VEHICLE AND REQUESTING VEHICLE INSPECTION. REGION ADVISED THAT IT COULD TAKE UP TO 90 DAYS TO INSPECT VEHICLE AND THAT INSPECTION WILL HAVE TO BE DONE AT TOYOTA DEALERSHIP.

Additional Summary:

Toyota ID No: 20040319057
NHTSA ODI No:
Date of Incident: 20040100
Vehicle: 2002 TOYOTA, LEXUS CAMRY, CAMRY SOLARA, ES300
Location of Incident: BALTIMORE, MD
NHTSA Summary:
*** PHONE LOG 03/19/2004 10:31:23 AM MMCKNIGHT CUST STS SHE TOOK VEH IN TO DLR THIS WEEK. CUST STS THAT THE SM HAS DRIVEN VEH & ADV THAT HE UNDERSTANDS ISSUE, BUT THAT THERE IS NOTHING PLSE DLR CAN DO. CUST STS THAT VEH LUNGES FORWARD WHEN BRAKING. CUST STS HAS HAD COMPLAINT SINCE PURCH VEH. CUST/CUST FEELS THAT VEH HAS A SAFETY ISSUE & WOULD LIKE FOR LEXUS TO REPURCH VEH. CUST STS SM ADV SHE WOULD CONTACT SLS MGR & THAT THEY WILL CONTACT LEXUS. CUST STS SHE HAS ALSO CONTACT NHSTA & ADV OF CONCERN. *** NOTES 03/19/2004 10:32:41 AM MMCKNIGHT TO: RICHARD STRICKLAND, SM & DSNNR SCARBO. OSM FROM: MONICA MCKNIGHT 310-968-4985 CUST STS THAT DLR ADV WOULD CONTACT LEXUS TO DISCUSS REPURCH CUST VEH. CUST WOULD LIKE TO KNOW STATUS ON REQ. PLS ADVISE. THANK YOU. *** SUBCASE 20040319057-1 CREATED 03/19/2004 10:32:59 AM MMCKNIGHT
Additional Summary:

Toyota ID No: 20040320155
NHTSA ODI No:
Date of Incident: 20040300
Vehicle: 2003 TOYOTA, LEXUS CAMRY, CAMRY SOLARA, ES300
Location of Incident: PLEASANT PRAIRIE, WI
NHTSA Summary:
*** PHONE LOG 03/30/2004 02:17:07 PM JSH0/FF
CUST STS WAS IN A PARKING LOT. STS THE VEH SURGED FORWARD FOR NO APPARENT REASON. STS THIS HAPPENED APPROXIMATELY 2 WEEKS AGO. STS VEH WAS IN DRIVE AND CUST HAD THE BRAKE ON AND VEH SURGED FORWARD. STS NOT SURE HOW FAR VEH LURCHED FORWARD. STS WAS NOT HARMED AND NO ONE WAS IN FRONT OF CUST STS THOUGHT IS WAS DUE TO CUST BUT THEN SHE SAW THE NEWS RELEASE ABOUT THE CURRENT CNCRN. STS IS CNCRND ABOUT HER SAFETY AND SAFETY OF OTHERS.

*** CASE CLOSE 03/30/2004 02:17:14 PM JSH0/FF
NCR APOL, ADVS WILL DOC CUST CNCRN. GAVE CASE # ADVS TOY IS INVESTIGATING SITUATION FULLY. ADVS CONTACT TOY IF CNCRN OCCURS AGAIN.

Additional Summary:

Toyota ID No: 20040101233
NHTSA ODI No:
Date of Incident: 20040100
Vehicle: 2003 TOYOTA, LEXUS CAMRY, CAMRY SOLARA, ES300
Location of Incident: TOLLESON, AZ
NHTSA Summary:
*** PHONE LOG 03/10/2004 02:27:39 PM ABEYDON
CUST STS SHE IS HAVING CONCERNS WITH VEH ENGINE SURGE, CUST STS VEH SURGES WHEN BRAKING, WHEN GETTING TOO CLOSE TO VEH, WHEN REMOVING FOOT FROM ACCELERATOR TO BRAKE, VEH SURGES FORWARD. CUST STS HAS NOTICED THIS WHEN DRIVING ON THE FREEWAY. CUST STS SHE HEARD ABOUT CONCERN ON THE NEWS.
*** NOTES 03/10/2004 02:27:39 PM ABEYDON
NCR ADV CUST THAT TOYO IS JUST STARTING INVESTIGATION ALONG WITH NHTSA. NCR ADV CUST OF DLR OPEN SO THAT DLR MAY DIAGNOSE VEH SINCE CUST IS HAVING CONCERNS WITH VEH. ADV THERE IS NO SRC AT THIS TIME, TOO EARLY TO COMMENT ON CONCERN AND WHAT IS GOING TO BE DONE.

*** CASE CLOSE 03/10/04 05:12:46 PM DLR02031
MS. FRAZIER SAID SHE WOULD COME IN ON THE MORNING OF THE 16TH. BOTH THE CUSTOMER AND OUR SHOP FOREMAN WILL GO FOR A TEST DRIVE, SHARING THE DRIVING (WITH EMPHASIS ON REMOVING FOOT FROM THE ACCELERATOR AND MOVING IT TO THE BRAKES PEDAL.
Additional Summary:

Toyota ID No: 20040100425
NHTSA ODI No:
Date of Incident: 20040400
Vehicle: 2003 TOYOTA, LEXUS CAMRY, CAMRY SOLARA, ES300
Location of Incident: SACRAMENTO, CA
NHTSA Summary:
*** PHONE LOG 03/19/2004 09:42:02 AM CSMITH
CUST STS WHILE DRIVING WHEN HE APPROACHED & SLOWED DOWN VEH SURGE FORWARD. CUST STS ACCELERATION WAS NOT TOO HIGH. CUST STS WAS SLOWING DOWN, VEH TOOK OFF & ALMOST HIT VEH IN FRONT. CUST STS CALLED DLR WHO ADV TO BRING VEH IN FOR INSPECTION.

*** CASE CLOSE 03/19/2004 09:42:10 AM CSMITH
NCR APOL & ADV CUST VEH IS NOT INVOLVED IN ANY RECALL @ THIS TIME, NCR ADV TO TAKE TO DLR FOR INSPECTION. CUST AGREED. NCR OFFERED CASE#. CUST DISCONNECTED.
Additional Summary:

Toyota ID No: 20040325055
NHTSA ODI No:
Date of Incident: 20040100
Vehicle: 2003 TOYOTA, LEXUS CAMRY, CAMRY SOLARA, ES300
Location of Incident: FERRY HALL, MD
NHTSA Summary:
*** PHONE LOG 03/25/2004 01:27:08 PM FTIMBERLAKE

<=FCRP=> CUST STS HIS WIFE (LAUREEN) WAS DRIVING VEH AND APPROACHING THE STOP LIGHT, STS SHE APPLIED BRAKES BUT VEH ACCELERATED AND REAR ENDED TWO VEHICLES. CUST STS BRAKES DIDN'T SLOW VEH DOWN. CUST WANTS TO KNOW WHY VEH ACCELERATED WHEN HIS WIFE APPLIED THE BRAKES. LEGAL REQUESTS PORP WITH MANY INTERIOR/EXTERIOR PHOTOS
*** NOTES 04/01/2004 02:31:04 PM FTIMBERLAKE
<=OUTGOING CUST CALL=> NCR RETURNING CUST'S VM. CUST STS REGION HAS NEVER CONTACTED HIM. NCR SENT EMAIL TO DEBBIE SIMMONS - CAT. CUST UNHAPPY AND IS CONTACTING THE MEDIA.
*** NOTES 04/01/2004 02:34:37 PM FTIMBERLAKE
NCR LEFT VM FOR DEBBIE SIMONS (DIDN'T SEND EMAIL) TO CALL CUST
*** NOTES 04/02/04 06:55:53 AM CAT6
REGION CONTACTED CUSTOMER ON 4/30/04 AND LEFT DETAILED MSG ON ANS MACH FOR A RETURN CALL TO VERIFY VEHICLE LOCATION. CUST RETURNED CALL ON 3/31/04 AND LEFT MSG FOR A RETURN CALL. REGION RETURNED CUST CALL ON 4/1/04 AND LEFT ANOTHER MSG FOR VERIFICATION OF VEHICLE LOCATION. CUSTOMER THEN APPEARED ON CHANNEL 13 NEWS WITH VEHICLE AND MANY ACCUSATIONS. REGION NOW HAS LEFT YET ANOTHER MESSAGE ON CUST ANS MACHINE TO VERIFY VEHICLE LOCATION.=>
*** NOTES 04/02/04 06:57:53 AM CAT6
>=>DUE TO MEDIA INVOLVMENT REGION IS ATTEMPTING TO CONSULT WITH LEGAL DEPARTMENT FOR FURTHER HANDLING OF CASE. FTS ARE ALSO BEING CONSULTED TO NOW PERFORM THE INSPECTION. IF CUST RETURNS CALL TO VERIFY LOCATION OF VEHICLE WILL PASS INFO INTO FTS FOR INSPECTION.
*** NOTES 04/05/04 10:35:06 AM CAT6
4/2/04 CUSTOMER RETURNED CALL TO ADVISE OF VEHICLE LOCATION. CUSTOMER ALSO WISHES TO BE PRESENT AT TIME OF INSPECTION. ADVISED CUSTOMER THAT I DID NOT KNOW TIME OF INSPECTION, JUST THAT IT WOULD BE INSPECTED THAT DAY. FTS TO INSPECT.
*** NOTES 04/05/04 10:54:31 AM CAT6
4/2/04 ADVISED FTS THAT CUSTOMER VERIFIED VEHICLE LOCATION IN FILE. FTS TO PERFORM FCR INSPECTION ON 4/5/04 IN AM.
*** NOTES 04/05/04 10:27:15 AM CAT6
FTS WHEN TO VEHICLE LOCATION SPECIFIED IN FILE
Additional Summary:

Toyota ID No:
NHTSA ODI No: 10060901
Date of Incident: 20040101
Vehicle: 2002 TOYOTA CAMRY SOLARA
Location of Incident: DOUGLAS, GA
NHTSA Summary:
WHILE SITTING AT A RED LIGHT WITH THE AIR CONDITIONER ON THE CAR SURGED FORWARD. THIS HAS HAPPENED SEVERAL TIMES, ALTHOUGH NO INJURIES OR WRECKS HAVE STEMMED FROM ANY OF THE INCIDENTS. ALSO WHEN I PUT THE CARS IN DRIVE FROM REVERSE SOMETIMES THE CAR SURGES FORWARD WITHOUT APPLYING PRESSURE TO THE ACCELERATOR.*AK
Additional Summary:

Toyota ID No:
NHTSA ODI No: 10061901
Date of Incident: 20040301
Vehicle: 2001 TOYOTA LAND CRUISER

Location of Incident: MORRISTOWN, NJ
NHTSA Summary:
MY CAR SUDDENLY ACCELERATED WHEN I PRESSED THE BRAKES GOING DOWN AN INCLINE.*AK
Additional Summary:

Toyota ID No:
NHTSA ODI No: 10063295
Date of Incident: 20040300
Vehicle: 2002 TOYOTA CAMRY SOLARA
Location of Incident: LOMBARD, IL
NHTSA Summary:
WHILE PULLING INTO A PARKING SPOT VEHICLE SUDDENLY ACCELERATED, AND IT LANDED ON THE HOOD OF ANOTHER VEHICLE. THERE WERE NO INJURIES. *AK CONSUMER ALSO STATED THAT APPLYING THE BRAKES DIDN'T HELP STOP THE VEHICLE. *LA
Additional Summary:

Toyota ID No:
NHTSA ODI No: 10062970
Date of Incident: 20040307
Vehicle: 2001 TOYOTA CAMRY
Location of Incident: CLINTON, IA
NHTSA Summary:
WHEN APPLYING THE BRAKE PEDAL IT WOULD PROCEED TO THE FLOOR AND CONTINUED TO ACCELERATE. *AK THE VEHICLE SURGED FORWARD AND CRASHED INTO A BUILDING. *SC THE CONSUMER STATED THE BRAKES WERE SOFT. *JB
Additional Summary:

Toyota ID No:
NHTSA ODI No: 10062139
Date of Incident: 20040307
Vehicle: 2003 TOYOTA RAV4
Location of Incident: NEW MARKET, MD
NHTSA Summary:
SUDDEN AND RAPID ACCELERATION WHEN AUTO WAS PUT IN REVERSE. BRAKES DID NOT WORK. CAR FORCED INTO PARK AND CONTINUED TO ROLL BACKWARDS WHILE ENGAGED IN PARK. *AK
Additional Summary:

Toyota ID No:
NHTSA ODI No: 10064359
Date of Incident: 20040308
Vehicle: 2002 LEXUS ES300
Location of Incident: SANTA BARBARA, CA
NHTSA Summary:
THE LEXUS ES300 WAS DRIVEN AT ALMOST 0 MPH SPEED TO GET READY TO PARK OUTSIDE THE GARAGE. THE CAR CONTINUES ACCELERATING EVEN AFTER THE DRIVER WAS HITTING THE BRAKE TO STOP THE CAR. THE CAR SMASHED THE CAR GARAGE DOOR, AND EVERYTHING ON THE WAY. THERE WAS MORE THAN $5,000 DAMAGES TO THE

CAR AND $1,250.00 ON REAL PROPERTY. THERE WAS NO MAJOR INJURIES TO THE DRIVER, BUT BODY PAIN ON SOFT TISSUES OCCURRED AFTER THE ACCIDENT. *AK
Additional Summary:

Toyota ID No:
NHTSA ODI No: 10063716
Date of Incident: 20040309
Vehicle: 2002 TOYOTA CAMRY
Location of Incident: PHILADELPHIA, PA
NHTSA Summary:
WHILE DRIVING 5 MPH AND PULLING INSIDE OF A PARKING LOT VEHICLE SUDDENLY ACCELERATED. CONSUMER WAS ABLE TO MAINTAIN CONTROL OF THE VEHICLE BY APPLYING THE BRAKES. CONSUMER CONTACTED A DEALER BY PHONE, AND TECHNICIAN INFORMED THE DRIVER THAT NOTHING COULD BE DONE. *AK *LA
Additional Summary:

Toyota ID No:
NHTSA ODI No: 10063594
Date of Incident: 20040309
Vehicle: 2004 TOYOTA CAMRY
Location of Incident: MORRIS, AL
NHTSA Summary:
WHILE PARKING IN A PARKING SPACE, THE VEHICLE SUDDENLY ACCELERATED. AS A RESULT, THE CONSUMER LOST CONTROL OF THE VEHICLE AND HIT A CHAIN AND FENCE POST. DEALER NOTIFIED. *AK *SC *JB
Additional Summary:

Toyota ID No:
NHTSA ODI No: 10061470
Date of Incident: 20040300
Vehicle: 2000 LEXUS GS300
Location of Incident: FRANKLIN, MA
NHTSA Summary:
WHILE DRIVING AT 35 MPH VEHICLE SUDDENLY ACCELERATED. DEALER NOTIFIED.*AK
Additional Summary:

Toyota ID No:
NHTSA ODI No: 10062992
Date of Incident: 20040310
Vehicle: 2002 TOYOTA CAMRY
Location of Incident: COLUMBUS, OH
NHTSA Summary:
WHILE DRIVING AT 5 MPH VEHICLE SUDDENLY ACCELERATED. *AK
Additional Summary:

Toyota ID No:
NHTSA ODI No: 10063981
Date of Incident: 20040310
Vehicle: 2002 TOYOTA CAMRY

Location of Incident: TORONTO, BO
NHTSA Summary:
WHILE WAITING AT AN INTERSECTION VEHICLE SUDDENLY ACCELERATED. DRIVER'S FOOT WAS PLACED ON THE BRAKE AT THIS TIME OF THE INCIDENT. DRIVER TURNED OFF THE VEHICLE AND WAS ABLE TO RESTART, AND DRIVE IT TO THE TO DEALER FOR INSPECTION. MECHANIC WAS NOT ABLE TO DUPLICATE OR RESOLVE THE PROBLEM. *AK
Additional Summary:

Toyota ID No:
NHTSA ODI No: 10042502
Date of Incident: 20040310
Vehicle: 2003 TOYOTA CAMRY
Location of Incident: WHITING, NJ
NHTSA Summary:
WHILE APPLYING THE BRAKES AT A TOLL BOOTH BRAKE PEDAL WENT TO THE FLOOR AND VEHICLE SUDDENLY ACCELERATED. AS A RESULT, CONSUMER'S VEHICLE REAR END ANOTHER VEHICLE. UPON IMPACT, BOTH AIR BAGS DID NOT DEPLOY. DRIVER AND PASSENGER SUSTAINED HEAD AND BACK INJURIES, AND WERE TRANSPORTED BY AMBULANCE TO THE HOSPITAL. VEHICLE WAS TOTALED.*AK
Additional Summary:

Toyota ID No:
NHTSA ODI No: 10061751
Date of Incident: 20040310
Vehicle: 2000 LEXUS ES300
Location of Incident: COLUMBUS, GA
NHTSA Summary:
WHILE ENTERING A PARKING LOT VEHICLE ACCELERATED ON ITS OWN. CONSUMER TAPPED THE BRAKES, AND SPEED INCREASED EVEN MORE. AS A RESULT, DRIVER LOSS CONTROL OF VEHICLE, AND HIT A WALL. *AK SEE VOQ 10062791 *DSY
Additional Summary:

Toyota ID No:
NHTSA ODI No: 10061794
Date of Incident: 20040310
Vehicle: 2000 LEXUS ES300
Location of Incident: ALBUQUERQUE, NM
NHTSA Summary:
THE VEHICLE LUNGED UPON PARKING. AS A RESULT THE CONSUMER LOST CONTROL AND HIT A WALL. THE FRONT END REPAIRS COST $2,275.00. *AK SUDDEN ACCELERATION) *SC *JB
Additional Summary:

Toyota ID No:
NHTSA ODI No: 10062896
Date of Incident: 20040310
Vehicle: 2003 LEXUS ES300
Location of Incident: NEW ROCHELLE, NY
NHTSA Summary:

WHILE WAITING IN HEAVY TRAFFIC AT AN INTERSECTION AND WITHOUT WARNING VEHICLE SUDDENLY ACCELERATED. THIS CAUSED THE DRIVER TO REAR END THE VEHICLE IN FRONT. UPON IMPACT, BOTH AIR BAGS DID NOT DEPLOY. THE VEHICLE WAS TOWED TO THE DEALER. THE INSURANCE COMPANY TOTALED THE VEHICLE. *AK THE DEALERSHIP INSISTED THAT THERE WAS NOTHING WRONG WITH THE VEHICLE. THE CONSUMER CONTACTED THE MANUFACTURER AND WAS TOLD THAT NOTHING COULD BE DONE. *NM
Additional Summary:

Toyota ID No:
NHTSA ODI No: 10042312
Date of Incident: 20040311
Vehicle: 2003 TOYOTA CAMRY
Location of Incident: HANOVER, NH
NHTSA Summary:
ON SEVERAL OCCASIONS THE BRAKE PEDAL HAS GONE TO THE FLOOR WHEN I ATTEMPTED TO STOP OR SLOW THE CAR. BRAKING OR ACCELERATING THE CAR IS NOT SMOOTH AND THERE ARE SUDDEN ACCELERATIONS OR SURGES OF THE CAR. THE CAR WAS TESTED BY THE DEALER'S SERVICE MANAGER AND BY THE SALESMAN. BOTH AGREED THAT THE CAR HAD SPONGY BRAKING BUT STATED THAT ALL 2003 CAMRYS BEHAVED IN SIMILAR FASHION AND THAT THERE WAS NO "FIX" FOR THE PROBLEM. THE TOYOTA MANUFACTURER STATED THAT THEY HAD RECEIVED SIMILAR COMPLAINTS WHICH THEY WERE INVESTIGATING BUT THEY DID NOT KNOW WHAT CAUSED THE PROBLEM SO THEY COULD NOT PROVIDE ANY SUGGESTIONS FOR ITS REPAIR.*AK
Additional Summary:

Toyota ID No:
NHTSA ODI No: 10042872
Date of Incident: 20040312
Vehicle: 2002 TOYOTA CAMRY
Location of Incident: ROCKVILLE, MD
NHTSA Summary:
2002 TOYOTA CAMRY SURGES FORWARD UNEXPECTEDLY. BRAKES ARE BEING APPLIED, BUT THE VEHICLE ACCELERATES. ABS KICKS IN. HAPPENS INTERMITTENTLY. HAS HAPPENED TWICE NOW OVER LAST 3-5 WEEKS. LAST TIME JUST IN FRONT OF A SCHOOL CROSS WALK. TOOK THE CAR TO THE DEALER (22 MAR 04) AND WAS INFORMED NOTHING COULD BE DONE. SENT ME HOME WITH CAR DESPITE MORE THAN AN HOUR WITH DEALER. AND VERY SERIOUS CONCERNS ABOUT CAR SAFETY.*AK
Additional Summary:

Toyota ID No:
NHTSA ODI No: 10062211
Date of Incident: 20040312
Vehicle: 2002 TOYOTA CAMRY
Location of Incident: CLEVELAND, OH
NHTSA Summary:
2002 TOYOTA CAMRY XLE - ENGINE SURGE UNEXPECTED ACCELERATION I HAVE BEEN OPERATING THIS VEHICLE FOR TWO YEARS WITHOUT INCIDENT. HOWEVER, IN THE LAST TWO MONTHS I HAVE EXPERIENCED THE ENGINE SURGE/RACING PROBLEM. THE FIRST EPISODE TOOK PLACE 2 MONTHS AGO AS I WAS IN REVERSE AND BACKING OUT OF A DRIVEWAY; I WAS ABLE TO STOP BY APPLYING THE BRAKES. THE SECOND INCIDENT TOOK PLACE AS I WAS BEGINNING TO ACCELERATE FROM A STOP LIGHT. THE VEHICLES

AHEAD OF ME WERE SLOWING DOWN AS I APPLIED THE BRAKES TO SLOW DOWN THE ENGINE BEGAN TO RACE. I WAS ABLE TO STOP THE CAR WITH THE BRAKES BUT DID LIGHTLY HIT THE CAR IN FRONT OF ME. THERE WAS NO DAMAGE TO EITHER VEHICLE OR ANY INJURIES. I TOOK THE CAR TO MY DEALER THIS MORNING AND REPORTED THE INCIDENTS. THE DEALERSHIP TEST DROVE THE CAR AND COULD NOT DUPLICATE THE PROBLEM. I DID HAVE PASSENGER IN CAR DURING THE MOST RECENT EPISODE WHO CAN ATTEST TO THE PROBLEM. *AK
Additional Summary:

Toyota ID No:
NHTSA ODI No: 10063107
Date of Incident: 20040312
Vehicle: 2004 TOYOTA COROLLA
Location of Incident: NORTH EAST, MD
NHTSA Summary:
INTERMITTENTLY WHILE DRIVING AT LOW SPEED VEHICLE SUDDENLY ACCELERATED. *AK
Additional Summary:

Toyota ID No:
NHTSA ODI No: 10171110
Date of Incident: 20040314
Vehicle: 2003 TOYOTA CAMRY
Location of Incident: BANGOR, CA
NHTSA Summary:
MY MOTHER AND FRIEND STARTED OUT FOR CHURCH. THE FRIEND HAD COME TO PICK HER UP WHEN THE 2004 TOYOTA CAMRY WITH LESS THAN 2000 MILES ON IT WAS HAVING DIFFICULTY SHIFTING INTO REVERSE. THEN WHEN SHE SHIFTED INTO DRIVE THE CAR ACCELERATED UNCONTROLLABLY OFF SPEED ON 80 - 92 MILE A HOUR IN LESS THAN 250 FT WHEN THE CAR HIT A MOBILE HOME. THEY HIT SO HARD IT MOVED DOUBLE WIDE ALMOST A FOOT. KILLING MY MOTHER THE PASSENGER AND INJURY TO HER FRIEND THE DRIVER. NO AIR BAG DEPLOYED AND WHEN TOYOTA WAS CONTACTED THEY REFUSED TO SPEAK TO US. ATTORNEYS HAVE SAID THAT TOYOTA IS SO BIG NOT COST AFFECTIVE. SO I WATCH AND IN TWO YEARS THERE ARE MANY MANY MORE NOW. HOW MANY MORE HAVE TO DIE BEFORE SOMETHING IS DONE. SEE ALSO 10074472. *DSY *NM. DIFFICULTY SHIFTING FROM PARK TO REVERSE. THEN UPON SHIFTING INTO DRIVE THE CAR ACCELERATED UNCONTROLLABLY, WOULD NOT STOP, COLLIDED WITH A MOBILE HOME. AIR BAGS DID NOT DEPLOY, RESULTING IN THE DEATH OF ONE PASSENGER AND INJURY OF DRIVER. *LA
Additional Summary:

Toyota ID No:
NHTSA ODI No: 10062510
Date of Incident: 20040314
Vehicle: 2000 LEXUS ES300
Location of Incident: WHITTIER, CA
NHTSA Summary:
THERE IS A DANGEROUS AND UNPREDICTABLE TENDENCY FOR THE VEHICLE ENGINE/TRANSMISSION COMBINATION TO ACCELERATE SUDDENLY AND UNEXPECTEDLY. THIS IS AN INTERMITTENT PROBLEM WHICH MAKES IT ESPECIALLY UNNERVING. IT IS MOST NOTICEABLE AT SPEEDS BELOW 40 MPH, WHEN FIRST SLOWING, FOLLOWED BY ACCELERATION. IT APPEARS TO BE EXACERBATE BY UNCERTAIN

TRANSMISSION "HUNTING" FOR PROPER GEAR/ENGINE SPEED COMBINATIONS. THE SUDDEN ACCELERATION CAUSES A RAPID AND JERKY THROTTLE RESPONSE TO MILD ACCELERATOR PEDAL INPUT. I HAVE TAKEN THE CAR TO THE DEALER ON AT LEAST TWO OCCASIONS FOR THIS ISSUE. THE FIRST TIME, THE DEALER REPROGRAMMED THE TRANSMISSION. THE SECOND TIME, THE TECHNICIAN TESTED THE VEHICLE AND NOTE "NO PROBLEM FOUND". AT CURRENT MILEAGE OF 22,000, THE PROBLEM SEEMS TO BE WORSENING. THIS IS A DANGEROUS CONDITION THAT, IF LEFT UNDIAGNOSED, IS LIKELY TO RESULT IN CAUSE OF AN ACCIDENT, SERIOUS INJURY OR MUCH WORSE. *JB
Additional Summary:

Toyota ID No:
NHTSA ODI No: 10065362
Date of Incident: 20040316
Vehicle: 2003 TOYOTA CAMRY
Location of Incident: INDIANAPOLIS, IN
NHTSA Summary:
WHEN COMING OUT OF A PARKING LOT ACCELERATOR STUCK, CAUSING THE VEHICLE TO ACCELERATE OUT OF CONTROL. VEHICLE GRAZED ANOTHER VEHICLE, WENT ACROSS A STREET, GRAZED A BUILDING, AND DROVE STRAIGHT INTO ANOTHER BUILDING. DRIVER WAS CONSCIOUS WHEN PARAMEDIC ARRIVED. THEY POUND THE DRIVER WITH BOTH FEET STILL ON THE BRAKE PEDAL. DRIVER WAS TRANSPORTED TO THE HOSPITAL, AND LATER DIED DUE TO FATAL INJURIES FROM THE CRASH. THE INSURANCE COMPANY PRESERVED THE VEHICLE AS EVIDENCE. THE POLICE REPORT STATED THE CRASH WAS DUE TO A MECHANICAL DEFECT. *AK *NM
Additional Summary:

Toyota ID No:
NHTSA ODI No: 10064297
Date of Incident: 20040316
Vehicle: 2000 LEXUS LS400
Location of Incident: CAPE CORAL, FL
NHTSA Summary:
WHILE CONSUMER WAS PARKING IN A PARKING SPACE VEHICLE SUDDENLY ACCELERATED. *AK *NM
Additional Summary:

Toyota ID No:
NHTSA ODI No: 10064413
Date of Incident: 20040317
Vehicle: 2003 TOYOTA CAMRY
Location of Incident: SOMERSET, NJ
NHTSA Summary:
WHILE MAKING A RIGHT TURN AT 5 MPH, THE VEHICLE HESITATED, THEN IT ACCELERATED ON ITS OWN. THIS CAUSED THE VEHICLE TO HIT THE CURB. *AK. THE PROBLEM WAS WITH THE ANTI-LOCK BRAKES. *SC *JB
Additional Summary:

Toyota ID No:
NHTSA ODI No: 10063476
Date of Incident: 20040318
Vehicle: 2002 TOYOTA CAMRY

Location of Incident: BRIDGTON, ME
NHTSA Summary:
WHILE DRIVING 55 MPH, THE VEHICLE SUDDENLY ACCELERATED. THE CONSUMER WAS ABLE TO MAINTAIN CONTROL OF THE VEHICLE BY APPLYING THE BRAKES TO SLOW THE VEHICLE DOWN. THIS HAPPENED MORE THAN ONCE. THE DRIVER WILL CONTACT THE DEALER IN THE NEAR FUTURE. *AK THE VEHICLE WOULD CONTINUE IN MOTION WHEN THE CONSUMERS FOOT WAS NOT ON THE ACCELERATOR. WHEN SLOWING FROM SPEEDS ABOVE 30 MPH, THE VEHICLE WOULD NOT SLOW BELOW 20-25 MPH WITHOUT APPLYING THE BRAKES. AS THE TACHOMETER DROPPED DOWN TO 1000 RPMS, IT WOULD AUTOMATICALLY MAKE A SLIGHT SURGE TO 1100-1200 RPM'S THEN SETTLE TO 1000 RPMS AND WOULD CONTINUE UNTIL THE BRAKES WERE APPLIED. *SC *JB
Additional Summary:

Toyota ID No:
NHTSA ODI No: 10064706
Date of Incident: 20040318
Vehicle: 2003 LEXUS ES300
Location of Incident: SHERMAN OAKS, CA
NHTSA Summary:
WHEN PULLING INTO A PARKING SPOT DRIVER DEPRESSED THE BRAKE PEDAL AND VEHICLE SUDDENLY ACCELERATED. VEHICLE WENT OVER THE CURB AND HIT A LIGHT POLE. FRONT LEFT SIDE OF THE VEHICLE WAS DAMAGED. UPON IMPACT, FRONT AIR BAGS DID NOT DEPLOY. DRIVER SUSTAINED MINOR BRUISES. *AK *LA
Additional Summary:

Toyota ID No:
NHTSA ODI No: 10052425
Date of Incident: 20040319
Vehicle: 2001 TOYOTA 4RUNNER
Location of Incident: TALLAHASSEE, FL
NHTSA Summary:
REGARDING MY 2001 TOYOTA 4-RUNNER, LIMITED, 4-WHEEL DRIVE WITH A V-8 ENGINE AND 5 SPEED AUTOMATIC TRANSMISSION. SINCE I'VE OWNED THE VEHICLE (SEPTEMBER 28, 2001) THE ENGINE HAS PERIODICALLY ACCELERATED SUDDENLY BY ITSELF, WHILE AT A STOP, SUCH AS AT A STOP LIGHT, WITH THE AC ON AND THE TRANSMISSION IN DRIVE. SOMETIMES THIS RESULTS IN AN ABRUPT ACCELERATION SIMILAR TO BEING HIT BY ANOTHER CAR IN THE REAR. IF I DIDNT HAVE MY FOOT FIRMLY ON THE BRAKE IN THESE INSTANCES, I WOULD HAVE SHOT INTO THE INTERSECTION. THIS PROBLEM IS NOT ONLY A SERIOUS SAFETY PROBLEM, BUT HAS TO BE DOING DAMAGE TO THE TRANSMISSION. I TOOK IT IN FOR REPAIR AND AS PREDICTABLE THE DEALER SAID THEY FOUND NO PROBLEM. ALL THEY DID WAS CONFIRM ITS IDLE, THEY DID NOT DRIVE IT IN TRAFFIC. THIS IS A SERIOUS PROBLEM AND COULD RESULT IN A SERIOUS INCIDENT. I'VE NOTED OTHER COMPLAINTS HAVE BEEN MADE TO NHTSA ON THE SAME PROBLEM. I BELIEVE THIS PROBLEM SHOULD BE INVESTIGATED BEFORE SERIOUS INJURIES ARE INCURRED BY SOMEONE *AK
Additional Summary:

Toyota ID No:
NHTSA ODI No: 10062541
Date of Incident: 20040319
Vehicle: 2002 TOYOTA CAMRY
Location of Incident: PARIS, KY

NHTSA Summary:
WHILE DRIVING AT LOW SPEEDS OR PARKING IN A PARKING SPACE THE VEHICLE SUDDENLY ACCELERATED. THE DEALER INSPECTED THE VEHICLE SIX DIFFERENT TIMES BUT COULD NOT DUPLICATE OR CORRECT THE PROBLEM. *AK SER VOQ 10062582. *DSY ON ONE OCCASION WHILE PARKING THE VEHICLE SURGED FORWARD AND HIT A POST (NO DAMAGE REPORTED). THE CONSUMER HAD TO REPLACE THE TIRES AT 21000 MILES BECAUSE THEY WOULD NOT MOVE WHILE ON ICE OR SNOW. *SM
Additional Summary:

Toyota ID No: 20040190697
NHTSA ODI No:
Date of Incident: 20040319
Vehicle: 2003 TOYOTA LEXUS CAMRY, CAMRY SOLARA, ES300
Location of Incident: LAS VEGAS, NV
NHTSA Summary:
*** PHONE LOG 03/19/2004 11:37:43 AM CMCMORRIS
STS WAS MAKING A RIGHT HAND TURN & VEH SURGED. STS VEH TO DLR THIS MORNING & DLR ADV COULD NOT FIND ANYTHING WRONG. STS DLR COULD NOT DUPLICATE COND. STS SPOKE TO SERVICE ADVISOR, ROBBIE CLEVELAND. STS WIFE WILL NOT DRIVE VEH NOW. STS HEARD IN THE PAPER WAS COMMON COND.

*** CASE CLOSE 03/19/2004 11:39:02 AM CMCMORRIS
NCR APOL & ADV DLR WILL HAVE TO BE ABLE TO DUPLICATE COND TO MAKE A RPR ATTEMPT. STS WIFE WILL NOT DRIVE VEH. NCR ADV NHTSA LOOKING INTO SURGING CONCERN.
Additional Summary:

Toyota ID No:
NHTSA ODI No: 10043734
Date of Incident: 20040319
Vehicle: 2000 LEXUS RX300
Location of Incident: ARLINGTON, VA
NHTSA Summary:
WHILE PULLING INTO A PARKING SLOT IN A PARKING GARAGE, MY CAR ACCELERATED SUDDENLY, CRASHING INTO THE CONCRETE WALL. BOTH AIR BAGS WERE DEPLOYED, FILLING CAR WITH SMOKE AND LEAVING DRIVER'S ARM WITH SOME KIND OF BURN AND SCARRING. DRIVER'S KNEES HIT DASHBOARD FORCEFULLY. *AK
Additional Summary:

Toyota ID No:
NHTSA ODI No: 10075355
Date of Incident: 20040226
Vehicle: 2003 TOYOTA AVALON
Location of Incident: TEHACHAPI, CA
NHTSA Summary:
WHILE STEPPING ON THE BRAKE PEDAL VEHICLE SUDDENLY ACCELERATED. THIS CAUSED THE VEHICLE TO COLLIDED WITH A HOUSE. VEHICLE WAS TOWED TO THE DEALER FOR INSPECTION NUMEROUS TIMES, BUT MECHANIC WAS NOT ABLE TO DUPLICATE THE PROBLEM. *AK
Additional Summary:

Toyota ID No:
NHTSA ODI No: 10063866
Date of Incident: 20040122
Vehicle: 2004 TOYOTA CAMRY
Location of Incident: BYKERSVILLE, MD
NHTSA Summary:
SUDDEN ACCELERATION WHEN PULLING INTO PARKING SPACE
Additional Summary:

Toyota ID No:
NHTSA ODI No: 10065870
Date of Incident: 20040124
Vehicle: 2003 TOYOTA CAMRY
Location of Incident: UNKNOWN, BC
NHTSA Summary:
WHILE PARALLEL PARKING ON A HILL, THE VEHICLE SUDDENLY ACCELERATED HITTING A PARKED CAR. *PM *MR
Additional Summary:

Toyota ID No:
NHTSA ODI No: 10067263
Date of Incident: 20040124
Vehicle: 2003 TOYOTA CAMRY
Location of Incident: GREENSBORO, NC
NHTSA Summary:
CONSUMER WAS PARKING THE VEHICLE WHEN IT SUDDENLY ACCELERATED. CONSUMER APPLIED THE BRAKES, BUT THE VEHICLE JUST KEPT GOING, CAUSING PROPERTY DAMAGE. VEHICLE WAS TOWED TO THE DEALERS. OWNER DROVE THE VEHICLE HOME AFTER THE REPAIRS WERE DONE. AGAIN, THE VEHICLE BEGAN TO ACCELERATE UNEXPECTEDLY. *AK
Additional Summary:

Toyota ID No:
NHTSA ODI No: 10065407
Date of Incident: 20040126
Vehicle: 2000 TOYOTA CAMRY
Location of Incident: CATONSVILLE, MD
NHTSA Summary:
WHILE DRIVING 40 MPH VEHICLE ACCELERATED TO HIGHER SPEEDS. TIRES CAUSED EXTENDED STOPPING DISTANCE. DEALERSHIP WAS NOTIFIED, BUT DID NOT RESOLVE THE PROBLEM. *AK
Additional Summary:

Toyota ID No:
NHTSA ODI No: 10073404
Date of Incident: 20040127
Vehicle: 2002 TOYOTA CAMRY
Location of Incident: MASCOT, TN
NHTSA Summary:
VEHICLE ACCELERATED WHEN IN REVERSE, AS A RESULT, THE VEHICLE CRASHED INTO A TREE AND MAILBOX. *AK SER VOQ 10076691. *DSY *SM

Additional Summary:

Toyota ID No:
NHTSA ODI No: 10066847
Date of Incident: 20040227
Vehicle: 2004 TOYOTA HIGHLANDER
Location of Incident: SAN DIEGO, CA
NHTSA Summary:
UNINTENDED ACCELERATION PROBLEM, IN A BRAND NEW TOYOTA HIGHLANDER CAUSING AN ACCIDENT. (IT HAD THE SAME PROBLEM TWICE BEFORE)
Additional Summary:

Toyota ID No:
NHTSA ODI No: 10065288
Date of Incident: 20040310
Vehicle: 2002 TOYOTA CAMRY
Location of Incident: MANCHESTER, NJ
NHTSA Summary:
WHILE APPLYING THE BRAKES PEDAL WENT TO THE FLOOR AND VEHICLE SUDDENLY ACCELERATED. THIS CAUSED THE DRIVER TO LOSE CONTROL OF THE VEHICLE AND HIT ANOTHER VEHICLE. UPON IMPACT, BOTH AIR BAGS DID NOT DEPLOY. CONSUMER WAS ABLE TO DRIVE THE VEHICLE TO THE DEALER FOR INSPECTION. HOWEVER, MECHANIC WAS UNABLE TO DUPLICATE THE PROBLEM. *AK *SM
Additional Summary:

Toyota ID No:
NHTSA ODI No: 10071826
Date of Incident: 20040409
Vehicle: 2004 TOYOTA CAMRY
Location of Incident: CHARLOTTE, NC
NHTSA Summary:
UPON APPLYING THE BRAKES CONSUMER SOMETIMES DEPRESSED THE ACCELERATOR AT THE SAME TIME. THIS CAUSED THE VEHICLE TO SURGE FORWARD. BOTH THE MANUFACTURER AND THE DEALER WERE NOTIFIED *AK
Additional Summary:

Toyota ID No: 20040421021005
NHTSA ODI No:
Date of Incident: 20040400
Vehicle: 2003 TOYOTA LEXUS CAMRY, CAMRY SOLARA, ES300
Location of Incident: CHICAGO, IL
NHTSA Summary:
*** PHONE LOG 04/12/2004 12:57:41 PM PTIMBERLAKE
CUST STS HE WAS PULLING INTO PARKING SPACE AND WHEN HE PUT HIS FOOT ON THE BRAKE THE ENGINE SURGED BY ITSELF AND FRONT END OF VEH HIT A BRICK WALL. CUST WANTS TO KNOW WHY VEH ACCELERATED BY ITSELF.

*** CASE CLOSE 04/12/2004 12:58:39 PM PTIMBERLAKE
NCR OFFERED BUT CUST REFUSED AS HE REFUSES TO WAIT UP TO 30 DAYS FOR INSPECTION. CUST VERY UNHAPPY AND STS HE WILL CONTACT HIS LAWYER.

Additional Summary:

Toyota ID No:
NHTSA ODI No: 10064761
Date of Incident: 20040401
Vehicle: 2001 LEXUS LS430
Location of Incident: ROHNERT PARK, CA
NHTSA Summary:
THIS CAR HAS A "DRIVE-BY-WIRE" THROTTLE CONTROL SYSTEM IN WHICH THE THROTTLE IS NOT DIRECTLY CONNECTED TO THE ENGINE BUT IS DIGITIZED AND SENT TO A COMPUTER FOR ANALYSIS PRIOR TO CONTROLLING THE ENGINE SPEED. THE SPEED CONTROL COMPUTER ANALYZES THE THROTTLE INPUT OVER TIME AND "LEARNS" THE DRIVERS THROTTLE CONTROL HABITS AND ADJUSTS THE ENGINE RESPONSE TO THROTTLE INPUT BASED ON THE LONG-TERM DRIVING HISTORY OF THE DRIVER. IF THE DRIVER DRIVES AGGRESSIVELY ALL OF THE TIME THEN THE THROTTLE RESPONSE IS GOOD. HOWEVER IF THE DRIVER DRIVES CONSERVATIVELY MOST OF THE TIME THEN THE THROTTLE RESPONSE IS POOR. I NORMALLY DRIVE CONSERVATIVELY AND I HAVE FOUND ON MANY OCCASIONS THAT THIS CAR DOES NOT RESPOND IN A TIMELY MANNER IN CASE OF EMERGENCY ACCELERATION. THAT IS, WHEN I DRIVE CONSERVATIVELY AND THEN NEED TO ACCELERATE QUICKLY TO AVOID ANOTHER VEHICLE, THIS CAR HESITATES FOR SEVERAL SECONDS BEFORE DECIDING TO SPEED UP. EVEN WHEN I STOMP ON THE ACCELERATOR, I DO NOT FEEL SAFE IN THIS CAR. I BELIEVE THAT THIS IS A SERIOUS SAFETY FLAW IN THE DESIGN OF THIS CAR. I HAVE REPORTED THIS PROBLEM TO MY LEXUS DEALER ON EVERY VISIT TO THE SERVICE DEPARTMENT SINCE I PURCHASED THE CAR NEW IN 2000, YET THEY HAVE FAILED TO ADDRESS THE PROBLEM. I WAS TOLD BY THE SERVICE DEPARTMENT THAT LEXUS WAS AWARE OF THE ISSUE AS SEVERAL CUSTOMERS HAVE COMPLAINED ABOUT THE PROBLEM. ON ONE OCCASION I WAS TOLD THAT THE ENGINEERS HAD AN EXPERIMENTAL FIRMWARE UPGRADE THAT THEY WERE TESTING WITH SOME CUSTOMERS. I HAVE CONTACTED LEXUS CUSTOMER SERVICE, BUT THEY JUST REFERRED ME BACK TO THE DEALERSHIP.*AK
Additional Summary:

Toyota ID No:
NHTSA ODI No: 10079469
Date of Incident: 20040402
Vehicle: 2002 TOYOTA CAMRY
Location of Incident: KENNER, LA
NHTSA Summary:
WHILE DRIVING AT 35 MPH VEHICLE SUDDENLY ACCELERATED. THE BRAKES WERE APPLIED, BUT FAILED TO STOP THE VEHICLE. CONSUMER TURNED THE STEERING WHEEL TO THE LEFT TO AVOID REAR ENDING ANOTHER VEHICLE. HOWEVER, CONSUMER'S VEHICLE JUMPED A CURB ONTO A GRASS SURFACE. VEHICLE RETAINED THE SAME SPEED, DIDN'T SLOW DOWN, AND DRIVE ON FEET BEFORE HITTING A SIGN AND TWO TREES. WHEN VEHICLE IMPACTED THE SECOND TREE, THE IMPACT CATAPULTED THE VEHICLE BACK ONTO THE STREET, AND THE VEHICLE FINALLY STOPPED. VEHICLE WAS TOTALED BY THE INSURANCE COMPANY. *AK
Additional Summary:

Toyota ID No:
NHTSA ODI No: 10066796
Date of Incident: 20040401
Vehicle: 2003 TOYOTA COROLLA

Location of Incident: WASHINGTON, DC
NHTSA Summary:
WHILE DRIVING AT A STOP LIGHT, THE VEHICLE SURGED FORWARD WITHOUT WARNING. *AK THE CONSUMERS FOOT WAS COMPLETELY ON THE BRAKE PEDAL. *SC *JB
Additional Summary:

Toyota ID No:
NHTSA ODI No: 10083475
Date of Incident: 20040401
Vehicle: 2003 TOYOTA AVALON
Location of Incident: TELLACHAPE, CA
NHTSA Summary:
WHILE DRIVING 3 MPH, THE DRIVER APPLIED THE BRAKE PEDAL AND WITHOUT WARNING THE VEHICLE ACCELERATED UNCONTROLLABLY. THE DRIVER WAS NOT ABLE TO MAINTAIN CONTROL OF THE VEHICLE AND COLLIDED INTO A FENCE. BOTH FRONTAL AIR BAGS FAILED TO DEPLOY. THE VEHICLE WAS TOWED TO THE DEALER FOR INSPECTION. THE MECHANIC WAS UNABLE TO DUPLICATE THE PROBLEM. *JB
Additional Summary:

Toyota ID No:
NHTSA ODI No: 10148914
Date of Incident: 20040405
Vehicle: 2003 TOYOTA CAMRY
Location of Incident: VERO BEACH, FL
NHTSA Summary:
VEHICLE EXPERIENCED SUDDEN ACCELERATION 11 TIMES. VEHICLE WAS TAKEN TO THE DEALER AFTER EACH INCIDENT, BUT THE CAUSE WAS STILL UNDETERMINED.*AK
Additional Summary:

Toyota ID No:
NHTSA ODI No: 10066664
Date of Incident: 20040406
Vehicle: 2003 TOYOTA CAMRY
Location of Incident: RIO RANCHO, NM
NHTSA Summary:
THE VEHICLE SUDDENLY ACCELERATES WHILE DRIVING. THE STEERING WHEEL ALSO FELL LOOSE WHILE DRIVING. THE DEALER INSPECTED THE VEHICLE SEVERAL TIMES BUT FOUND NO PROBLEMS. *MR AT A STOP LIGHT, THE BRAKE PEDAL GOES DOWN TOWARDS THE FLOOR. THE VEHICLE REMAINS STATIONARY AND THE BRAKES ALWAYS STOP THE CAR. DEY THE CONSUMER'S VEHICLE IS STILL EXPERIENCING SUDDEN ACCELERATION. *NM
Additional Summary:

Toyota ID No:
NHTSA ODI No: 10067062
Date of Incident: 20040406
Vehicle: 2003 TOYOTA CAMRY
Location of Incident: LEESBURG, FL
NHTSA Summary:
WHEN THE BRAKE PEDAL WAS DEPRESSED VEHICLE SUDDENLY ACCELERATED. CONSUMER HEARD THE ENGINE MOTOR RACING. THIS OCCURRED WHILE PULLING INTO

A DRIVEWAY. VEHICLE HIT A PARKED VEHICLE'S BUMPER, A POST, AND A FENCE BEFORE STOPPING. *AK INSURANCE CLAIMS DEPARTMENT SAID THAT A NUMBER OF COMPLAINTS REGARDING ON THE VEHICLE ON THE ELECTRONIC SYSTEM WHICH GIVES INFORMATION TO THE THROTTLE CONTROL SYSTEM. *LA
Additional Summary:

Toyota ID No:
NHTSA ODI No: 10067911
Date of Incident: 20040400
Vehicle: 2003 TOYOTA CAMRY
Location of Incident: CHICAGO, IL
NHTSA Summary:
WHILE APPLYING THE BRAKES VEHICLE SUDDENLY ACCELERATED. DRIVER WAS NOT ABLE TO CONTROL THE VEHICLE, CAUSING THE VEHICLE COLLIDE WITH A WALL. DRIVER SUSTAINED MINOR INJURIES. VEHICLE WAS TOWED TO THE DEALER. *AK
Additional Summary:

Toyota ID No: 20040420092
NHTSA ODI No:
Date of Incident: 20040409
Vehicle: 2002 TOYOTA, LEXUS CAMRY, CAMRY SOLARA, ES300
Location of Incident: COLUMBIA, IL
NHTSA Summary:
*** PHONE LOG 04/12/2004 12:31:20 PM BSRIBINE
====PCRF====
CUST'S HUSBAND GARY DOUCHANY CALLING ON BEHALF OF HIS WIFE. CUST REQ HIS WIFE WAS INVOLVED IN A VEH ACCIDENT ON FRIDAY. STS WAS PULLING INTO PARKING LOT WHEN VEH SUDDENLY ACCELERATED. STS HIT CAR PARKED IN OPPOSITE PARKING SPACE. STS NO INJURIES AND MINIMAL DAMAGE TO BUMPER. CUST REQUESTED FOR INSPECTION TO DETERMINE IF SOMETHING WRONG WITH VEH. NCR APOL & ADV CUST OF TCRP PARAMATERS. CUST UNDERSTANDS 60-DAY PROCESS.
*** NOTES 04/12/2004 12:31:32 PM BSRIBINE
LEGAL REQUESTS FIELD REPORT WITH MANY INTERIOR AND EXTERIOR PHOTOS
*** NOTES 04/12/2004 12:55:10 PM KG1
KD: NOTIFIED DSPM: MARK VANCEY, OF NEW OPEN FILE IN DISTRICT.
Additional Summary:

Toyota ID No:
NHTSA ODI No: 10065948
Date of Incident: 20040410
Vehicle: 2000 LEXUS GS400
Location of Incident: LAS VEGAS, NV
NHTSA Summary:
I WAS TRAVELING WITH MY FATHER, MING SPEN ON I-95 SOUTH BOUND NEAR I-15 INTER-CHANGE IN MY 2000 LEXUS GS400(30900 MILES). THE ACCELERATOR GOT STUCK(NOT BY CARPET OR FLOOR MAT) MECHANICALLY, AND MY CAR DOWNSHIFTED ITSELF AND WENT INTO FULL POWER ACCELERATION AT THE ENGINE SPEED OF OVER 5000 RPM. I TRIED TO BREAK WITH FULL FORCE, BUT FAILED TO STOP THE VEHICLE, AND THE CAR WAS GOING AT 85MPH AND GAINING SPEED. THE WHOLE INCIDENT LAST FOR ABOUT 3-5 MINUTES, AND I DIALED "911" AND TRIED TO ASK FOR HELP. BEFORE THE CALL WAS CONNECTED, I MAGICALLY REGAIN CONTROL OF MY LEXUS. THE ACCELERATOR DIS-ENGAGED AND THE ENGINE SPEED RETURNED TO NORMAL. I FELT THE BRAKE WAS

LOSING POWER AND BECAME VERY WEAK. I GOT OUT AT THE NEAREST EXIT AND PULLED INTO A GAS STATION. AS I GOT OUT MY CAR, I COULD SMELL THE BRAKES WERE BURNING, AND THE FRONT RIGHT BRAKE WAS TIRED. MY FATHER AND I WAS VERY LUCKY. BECAUSE IT WAS LATE AT NIGHT AND TRAFFIC WAS LIGHT ON THE FREEWAY. OTHER WISE, TRAVELING AT 85 MPH WITH FULL BRAKE AND NO CONTROL OF MY VEHICLE, WOULD DEFINITELY CAUSE SOME SERIOUS INJURY OR EVEN DEATH. MY LEXUS IS CURRENTLY LOCATED AT THE LOCAL FLETCHER JONES LEXUS, AND I AWAIT THE DEALERSHIP TO INSPECT AND FOUND OUT THE PROBLEM. I WOULD HOPE THERE IS SOMETHING THE ORGANIZATION COULD DO TO PREVENT SIMILAR INCIDENT TO HAPPEN IN THE FUTURE ON ANY OTHER LEXUS OWNERS.*AK
Additional Summary:

Toyota ID No: 10068210
NHTSA ODI No: 20030414
Date of Incident: 2002 TOYOTA AVALON
Location of Incident: DANBURY, CT
NHTSA Summary:
I PROCEEDED TO BACK OUT OF A PARKING SPACE AT COMCAST CABLE. AS I WAS BACKING UP I BUMPED INTO A UTILITY POLE IN THE MIDDLE OF THE LOT. I APPLIED THE BRAKES AND PUT TO CAR INTO DRIVE. WHEN I LIFTED MY FOOT OFF THE BRAKE THE CAR LUNGED FORWARD STRIKING A PARKED VEHICLE AND THE BUILDING. THE DISTANCE COULD NOT HAVE BEEN MORE THAN 10 TO 15 FEET. MY WIFE AND I HEARD A STRANGE SOUND COMING FROM UNDER THE BODY OF THE CAR. I UNFORMED MY INSURANCE COMPANY OF THE FACT THAT SOME TOYOTA MODELS WERE BEING INVESTIGATED FOR SUDDEN ACCELERATION PROBLEMS. HE SAID HE WOULD CHECK IT OUT. HE INFORMED ME THAT MY MODEL(2002 AVALON)WAS NOT AFFECTED. NOTHING FURTHER WAS DONE OTHER THAN TO FIX THE DAMAGE TO MY CAR.*AK
Additional Summary:

Toyota ID No:
NHTSA ODI No: 10071724
Date of Incident: 20040413
Vehicle: 2003 TOYOTA SEQUOIA
Location of Incident: CAPE CORAL, FL
NHTSA Summary:
ON APRIL 14, 2004 CONSUMER WAS DRIVING. UPON TAPPING THE ACCELERATOR PEDAL VEHICLE SURGED FORWARD WITH GREAT FORCE. DRIVER LOST CONTROL. AND HIT A SCHOOL. *AK
Additional Summary:

Toyota ID No:
NHTSA ODI No: 10072200, 10075396, 10067917, 10075435
Date of Incident: 20040415
Vehicle: 2003 TOYOTA CAMRY
Location of Incident: FREDERICK, MD
NHTSA Summary:
LTR FWD FM EUGENE J. KAROL, JR. (MD) RE SUDDEN ACCELERATION DEFECT FOR SER 2003 TOYOTA CAMRY. REQUESTS THE STATUS OF ANY NHTSA INVESTIGATION INTO SUDDEN ACCELERATION AND TOYOTA VEHICLES. REFS Y IN DUPLICATE ATTN: DENISE NOGE (BANNAPOLIS, MD OFC. *PH *SC SEE NOQS 10067917, 10075396 AND 10075435.
*DSY; LTR FM EUGENE KAROL (MD) WRITER OWNER OF A 2003 TOYOTA CAMRY SEEKING

INFORMATION ON PREVIOUS INVESTIGATION CONDUCTED BY NHTSA RE: SUDDEN ACCELERATION OF TOYOTA VEHICLES REPLY TO THE BALTIMORE DISTRICT OFC DOT #1084-4268 (EEN E084-01508 DER 3/26/04). *MR. *SC. *JB. SEE VOQS 10067327, 10072208 AND 10073455. *DSY. *JB. WHEN DRIVING AT LOW SPEEDS VEHICLE SURGED FORWARD. CONSUMER TOOK THE VEHICLE TO THE DEALER FOR INSPECTION, AND MECHANIC WAS UNABLE TO DUPLICATE THE PROBLEM. *AK. SEE VOQS 10072208, 10073196 AND 10073455. *DSY. *LA. WHEN THE GEAR SHIFTER WAS MOVED FROM DRIVE TO PARK THE ENGINE RATED AND REVVED. THE CONSUMER IMMEDIATELY TURNED OFF THE IGNITION. THE CONSUMER FEELS THAT IF THE SHIFTER WAS MOVED FROM PARK TO DRIVE THAT SUDDEN ACCELERATION WOULD HAVE OCCURRED. *NM. LTR FM EUGENE KAROL (MD) WRITER OWNER OF A 2003 TOYOTA CAMRY SEEKING INFORMATION ON PREVIOUS INVESTIGATION CONDUCTED BY NTHSA RE: SUDDEN ACCELERATION OF TOYOTA VEHICLES. *MR. *LA. SEE VOQ 10067327, 10072208 AND 10073196 ALSO. *DSY. THERE WERE AT LEAST 11 MORE TOYOTAS THAT HAVE EXPERIENCED A SIMILAR PROBLEM. TOYOTA ADVISED THE CONSUMER THAT THEY WERE HOLDING OFF ON ACTIONS UNTIL DOT COMPLETES THE INVESTIGATION. *SC. *JB.
Additional Summary:

Toyota ID No:
NHTSA ODI No: 10067319
Date of Incident: 20040416
Vehicle: 2001 TOYOTA CAMRY
Location of Incident: HIGHLAND HEIGHTS, KY
NHTSA Summary:
WHILE APPLYING THE BRAKES VEHICLE SUDDENLY ACCELERATED. DRIVER WAS ABLE TO MAINTAIN CONTROL OF THE VEHICLE AND DROVE IT TO THE DEALER FOR INSPECTION, AND MECHANIC COULD NOT DUPLICATE THE PROBLEM. THE DRIVER INFORMED THE MECHANIC THAT THIS PROBLEM OCCURRED MORE THAN ONCE. *AK.
Additional Summary:

Toyota ID No:
NHTSA ODI No: 10109297
Date of Incident: 20040418
Vehicle: 2003 TOYOTA AVALON
Location of Incident: TEMACHAPI, CA
NHTSA Summary:
STEPPED ON BRAKE AND CAR ACCELERATES INTO VERY HIGH SPEED. *JB
Additional Summary:

Toyota ID No:
NHTSA ODI No: 10099210
Date of Incident: 20040419
Vehicle: 2004 TOYOTA AVALON
Location of Incident: FOREST HILL, MD
NHTSA Summary:
WHILE DRIVING AT LOW SPEEDS VEHICLE ACCELERATED UNCONTROLLABLY. CONSUMER APPLIED THE BRAKE PEDAL AND THE VEHICLE CONTINUED TO ACCELERATE. CONSUMER WAS ABLE TO MAINTAIN CONTROL OF THE VEHICLE AND DROVE IT TO THE DEALER FOR INSPECTION. HOWEVER, MECHANIC COULD NOT DUPLICATE THE PROBLEM. *AK. *TT. *NM.
Additional Summary:

Toyota ID No:
NHTSA ODI No: 10067780
Date of Incident: 20040424
Vehicle: 2003 TOYOTA CAMRY
Location of Incident: FALL RIVER, MA
NHTSA Summary:
I BEGAN TO BACK OUT OF MY PARKING SPOT WHEN THE CAR SUDDENLY ACCELERATED. I WAS UNABLE TO REGAIN CONTROL OF THE VEHICLE UNTIL IT HAD STRUCK ANOTHER CAR, CAUSING DAMAGE TO MY REAR FENDER. FORTUNATELY, THERE WAS NO DAMAGE TO THE OTHER CAR. THIS HAS HAPPENED ONE OTHER TIME ABOUT 4 MONTHS AGO WHEN I WAS BACKING OUT OF MY GARAGE. NO DAMAGE WAS SUSTAINED AT THAT TIME. *AK
Additional Summary:

Toyota ID No:
NHTSA ODI No: 10072264
Date of Incident: 20040427
Vehicle: 2004 TOYOTA CAMRY
Location of Incident: BROOKLYN, NY
NHTSA Summary:
WHILE ACCELERATING FROM LOW SPEEDS, THE VEHICLE ACCELERATED AND CAUSED A COLLISION. *AK. *JB
Additional Summary:

Toyota ID No:
NHTSA ODI No: 10181827
Date of Incident: 20040425
Vehicle: 2003 TOYOTA TACOMA
Location of Incident: SAN JOSE, CA
NHTSA Summary:
FIRST INSTANCE 4/25/04 SLOWLY PULLING INTO A PARKING PLACE WITH A LIGHT TOUCH ON THE ACCELERATOR. THE ENGINE REVVED SO FAST THE TRUCK CLEARED THE PARKING STRIP AND CRASHED INTO A PILLAR ON THE SIDEWALK (PICTURE AVAILABLE) $5000.00 DAMAGE TO TRUCK & $6000.00 DAMAGE TO THE PILLAR. SECOND INSTANCE 10/09/04 STOPPED AT A RED LIGHT. ENGINE REVVED UP, PUT IT IN NEUTRAL & ENGINE REVVED FASTER. SHIFTED BACK INTO DRIVE AND ENGINE RETURNED TO NORMAL IN A COUPLE SECONDS. THIRD INSTANCE 10/05/07. JUST STOPPED AT A RED LIGHT. ENGINE REVVED UP AND WENT BACK TO NORMAL BEFORE I COULD TURN OFF THE KEY. IF THERE HAD BEEN A CAR IN FRONT OF ME I WOULD HAVE CRASHED. FIRST TWO TIMES I TOOK THE TRUCK TO THE DEALER. EACH TIME THEY COULD NOT FIND ANYTHING AND GENTLY MENTIONED THAT MAYBE THE ACCELERATOR & BRAKE WERE BOTH ENGAGED AT THE SAME TIME. FIRST TIME MY FOOT WAS ON THE ACCELERATOR & THE OTHER TIMES IT WAS ONLY ON THE BRAKE THAT WAS THE FIRST THING I CHECKED. THE SERVICE MGR. ADVISED ME NOT TO DRIVE IT SO I RENTED A CAR FOR A COUPLE DAYS. THEY HAD SOMEONE FROM TOYOTA COME TO CHECK IT OUT. COULD NOT FIND ANYTHING WRONG. LAST TIME WAS JUST THE OTHER DAY. HAVE NOT CALLED THEM YET. 2003 TOYOTA TACOMA FOUR DOOR DBL CAB. PURCHASED 07/29/03 CAPITOL TOYOTA. *JB
Additional Summary:

Toyota ID No:

NHTSA ODI No: 10071377
Date of Incident: 20040426
Vehicle: 2001 TOYOTA CAMRY
Location of Incident: REDDING, CA
NHTSA Summary:
WHEN THE CONSUMER TOOK HIS FOOT OFF THE BRAKE, WHILE SITTING AT AN INTERSECTION, THE VEHICLE ACCELERATED AND CRASHED INTO 3 VEHICLES AT A USED CAR DEALERSHIP. THE CONSUMER'S VEHICLE WAS TOTALED ALONG WITH ONE OF THE USED VEHICLES. NO INJURIES OR FATALITIES WERE REPORTED. *AK. *NM
Additional Summary:

Toyota ID No:
NHTSA ODI No: 10040989
Date of Incident: 20040427
Vehicle: 2002 LEXUS ES300
Location of Incident: DALLAS, TX
NHTSA Summary:
SUDDEN ACCELERATION OF 2002 LEXUS ES300 WITH FOOT ON THE BRAKE. CAR WAS JUST AT A STOP WHEN IT ACCELERATED WITH FOOT STILL ON THE BRAKE. CAR RAN INTO SIDE OF A BUILDING BEFORE STOPPING-FRONT END OF CAR WAS DEMOLISHED AND BUILDING BRICKS AND INSIDE WALL DEMOLISHED. CAR IS AT DEALERSHIP FOR REPAIRS NOW, ACCIDENT HAPPENED ONLY 2 DAYS AGO. *LA
Additional Summary:

Toyota ID No:
NHTSA ODI No: 10071490
Date of Incident: 20040427
Vehicle: 2001 TOYOTA SEQUOIA
Location of Incident: RENO, OR
NHTSA Summary:
WHILE APPLYING THE ACCELERATOR PEDAL VEHICLE CUT THE THROTTLE BACK FROM IDLING. THIS CAUSED THE WHEELS TO SPIN. THEN VEHICLE MOVED FORWARD ON ITS OWN AND STALLED. CONSUMER RESTARTED VEHICLE, AND DROVE IT TO THE DEALER FOR INSPECTION. DEALER INFORMED THE DRIVER THAT VEHICLE WAS OPERATING AS INTENDED, BUT IT WAS UNSAFE TO OPERATE IT. *AK
Additional Summary:

Toyota ID No:
NHTSA ODI No: 10081606
Date of Incident: 20040501
Vehicle: 2004 LEXUS RX330
Location of Incident: WOODCLIFF LAKE, NJ
NHTSA Summary:
WHEN ACCELERATING FROM AN IDLE POSITION VEHICLE HESITATES. *AK
Additional Summary:

Toyota ID No:
NHTSA ODI No: 10080815
Date of Incident: 20040501
Vehicle: 2004 LEXUS RX330
Location of Incident: BEAVER CREEK, OH

NHTSA Summary:
MY 2004 LEXUS ES330 HAS A PROBLEM WITH SHIFTING. WHEN ATTEMPTING TO ACCELERATE THE CAR HESITATES SIGNIFICANTLY BEFORE DECIDING TO DOWNSHIFT. THIS IS A NOTABLE PROBLEM WHEN TRYING TO AVOID TRAFFIC OR CHANGE LANES ELITHER UNDER CROWDED TRAFFIC CONDITIONS. LEXUS SAYS THIS IS NORMAL FOR THE CAR.*AK
Additional Summary:

Toyota ID No:
NHTSA ODI No: 10083123
Date of Incident: 20040504
Vehicle: 2005 TOYOTA MATRIX
Location of Incident: MECHANICSBURG, PA
NHTSA Summary:
CONSUMER WAS PULLING INTO A PARKING SPACE AND THE VEHICLE ACCELERATED WHILE CONSUMER'S FOOT WAS ON THE BRAKES, STRIKING A TREE ON THE FRONT PASSENGER'S SIDE. UPON IMPACT, FRONTAL AIRBAGS DID NOT DEPLOY. CONSUMER CONTACTED TOYOTA AND IT WAS INSPECTED BY A REPRESENTATIVE AND NO DEFECTS WERE FOUND. VEHICLE WAS SOLD FOR PARTS.*AK. *TS
Additional Summary:

Toyota ID No:
NHTSA ODI No: 10089211
Date of Incident: 20040511
Vehicle: 2002 LEXUS ES300
Location of Incident: VALRICO, FL
NHTSA Summary:
2002 LEXUS ES300 WITH ABOUT 10,000 MILES HAS A PROBLEM WITH HESITATION WHEN ACCELERATING AFTER SLOWING DOWN, ESPECIALLY AFTER COMPLETING A TURN. IT IS LIKE THE TRANSMISSION DOESN'T ADJUST WITH THE PRESSING OF THE GAS PEDAL ALMOST LIKE AN ACCIDENT BECAUSE OF THE HESITATION. ALSO I HAVE HAD PROBLEMS WITH THE CAR DOWN SHIFTING AS I COME DOWN A HILL. ALSO A PROBLEM WITH THE CAR TRYING TO DECIDE WHAT GEAR TO BE IN WHEN GOING AROUND 20 TO 25 MILES PER HOUR. YOU CAN FEEL THE CAR CHANGE GEAR. PASSENGERS EVEN HAVE ASKED WHAT WAS THAT? COMPLAINED TO DEALERSHIP, AND WAS TOLD IT WAS THE WAY I DRIVE. I HAD THE SB-TC004-04 PERFORMED AFTER RECEIVING THE LETTER FROM LEXUS, BUT IT DIDN'T HELP. MAY HAVE MADE IT WORSE. *AK
Additional Summary:

Toyota ID No:
NHTSA ODI No: 10074937
Date of Incident: 20040515
Vehicle: 2003 TOYOTA CAMRY
Location of Incident: EAST BRUNSWICK, NJ
NHTSA Summary:
ON MAY 12, 2004 AT TIME 15:33 MY WIFE WAS DRIVING OUR 2003 TOYOTA CAMRY. NO WAS TWO BLOCKS FROM OUR HOUSE, MAKING A RIGHT TURN FROM FARMS RD CIRCLE INTO RANGER ROAD. AS SHE MADE THE RIGHT TURN, THE CAR SUDDENLY ACCELERATED, ALLOWING HER TO LOSE CONTROL OF THE CAR, CAUSING HER TO JUMP THE CURB ON THE LEFT SIDE OF THE STREET, AND STRIKE A POSTAER E BASKETBALL NET/POLE ON THE CURB IN FRONT OF THE CORNER HOUSE. THE POLE SMASHED IN THE FRONT ROOF OF THE CAR AND SMASHED THE WINDSHIELD. THE CAR CONTINUED DOWN

THE GRASS CURB AND ITS UNDERCARRIAGE STRUCK THE CURB WHILE GOING BACK ONTO RANGER ROAD. THE AIRBAGS DID NOT DEPLOY. FORTUNATELY, NO ONE WAS INJURED. THE CAR WAS DAMAGED. *AK
Additional Summary:

Toyota ID No:
NHTSA ODI No: 10082277
Date of Incident: 20010534
Vehicle: 2002 TOYOTA CAMRY
Location of Incident: TAMARAC, FL
NHTSA Summary:
THE CONSUMER HAD AN ACCIDENT, WHEN THE VEHICLE ACCELERATED ON ITS OWN, STRUCK 3 VEHICLES HEAD ON AND THE AIR BAGS DID NOT DEPLOY. THE VEHICLE WAS TOWED TO THE DEALER AND THEY TOLD HIM THAT THERE WERE NO DEFECTS WITH THE AIR BAGS OR VEHICLE ACCELERATOR. TOYOTA HAS ACCEPTED A CLAIM IN WILL REIMBURSE THE CONSUMER FOR ALL DAMAGES. HOWEVER, THE CONSUMER SHOWS CONCERN THAT THERE IS NO RECALL. *LA ABE VOQ 10063132 *DSY
Additional Summary:

Toyota ID No:
NHTSA ODI No: 10068912
Date of Incident: 20010513
Vehicle: 2002 LEXUS ES300
Location of Incident: SILVER SPRING, MD
NHTSA Summary:
WHEN DRIVING A SPEED AND THE ACCELERATOR IS PRESSED HARD TO PASS OR TO ENTER A HIGHWAY, THE ENGINE RAVS BUT THE CAR DOES NOT ACCELERATE. THE DEALER TELLS ME THAT IS HOW THE CAR IS DESIGNED. I HAVE A 2002 LEXUS ES300 BUT HAVE DRIVEN THE 2000'S AND THEY ACT THE SAME WAY. WHEN YOU STOMP ON THE GAS AND THE CAR DOES NOT GO, IT LEAVES YOU IN A VERY PROCARIES SITUATION.*AK
Additional Summary:

Toyota ID No:
NHTSA ODI No: 10073942
Date of Incident: 20010518
Vehicle: 2002 TOYOTA CAMRY
Location of Incident: LAS VEGAS, NV
NHTSA Summary:
WHILE DRIVING IN TRAFFIC, AND THE BRAKE PEDAL APPLIED, THE VEHICLE SUDDENLY ACCELERATED. THIS CAUSED THE DRIVER TO SLAM THE GEAR SHIFT IN PARK IN ORDER TO STOP THE VEHICLE. THE MECHANIC INFORMED THE DRIVER THAT THE PROBLEM COULD NOT BE DUPLICATED. PLEASE FILE IN ADDITIONAL INFORMATION. *JB
Additional Summary:

Toyota ID No:
NHTSA ODI No: 10073900
Date of Incident: 20040518
Vehicle: 2002 TOYOTA CAMRY
Location of Incident: FREDERICK, MD
NHTSA Summary:
WHEN VEHICLE IS ENGAGED IN REVERSE IT ACCELERATES. *AK

Additional Summary:

Toyota ID No:
NHTSA ODI No: 10293482
Date of Incident: 20000510
Vehicle: 2001 TOYOTA CELICA
Location of Incident: HOUSTON, TX
NHTSA Summary:
I WAS DRIVING WEST BOUND ON I-10 NEAR DOWNTOWN HOUSTON, TX WHEN I WENT TO PASS A TRUCK AND PRESSED THE GAS PEDAL. WHEN I RELEASED THE GAS PEDAL, THE CAR KEPT ACCELERATING AND THE ENGINE WENT TO THE REDLINE. I TRIED THE BRAKES WHICH WORKED A LITTLE BUT BUT THE ENGINE WAS STILL SCREAMING AT THE REDLINE. FORTUNATELY THE FREEWAY WAS QUITE CLEAR AS I JUST KEPT GOING FASTER AND FASTER. I'M A "CAR-GUY" AND I'M ALSO A MECHANIC AND SINCE THIS WAS MY FIRST NEW CAR I EVER BOUGHT, I WAS WORRIED ABOUT THE ENGINE BLOWING UP MORE THAN I WAS ABOUT HITTING SOMEONE SINCE THE FREEWAY WAS PRACTICALLY EMPTY. I DID GET UP PAST 110 MPH THOUGH BEFORE I DECIDED TO PUT THE AUTOMATIC TRANSMISSION INTO NEUTRAL AND THEN THE KEY TO SHUT THE ENGINE OFF. I COASTED FOR A LITTLE WHILE TO REDUCE SPEED AND THEN STARTED THE ENGINE WHILE STILL COASTING. EVERYTHING WAS BACK TO NORMAL AND I PUT THE TRANSMISSION BACK INTO "DRIVE" AND WENT ABOUT MY WAY. I HAD JUST HAD MY FLOORMATS THOROUGHLY WASHED SO THEY WERE NOT IN THE VEHICLE AT THE TIME SINCE THEY WERE DRYING. THERE WERE NO FLOORMATS IN THE VEHICLE. I HAVE NEVER REPORTED THIS PROBLEM BECAUSE I JUST THOUGHT IT WAS A FREAK INCIDENT BUT NOW AS I'M HEARING MORE REPORTS ON SIMILAR ISSUES I THOUGHT IT WOULD BE HELPFUL FOR OTHER PEOPLE TO KNOW OF THIS INCIDENT AS WELL. *TR
Additional Summary:

Toyota ID No:
NHTSA ODI No: 10101710
Date of Incident: 20000520
Vehicle: 2002 TOYOTA CAMRY
Location of Incident: PRAIRIEVILLE, LA
NHTSA Summary:
WHILE DRIVING 20 MPH VEHICLE ACCELERATED UNCONTROLLABLY. CONSUMER APPLIED THE BRAKE PEDAL AND VEHICLE CONTINUED TO ACCELERATE. CONSUMER WAS UNABLE TO MAINTAIN CONTROL OF THE VEHICLE, AND IT HIT A LADY, WHO SUSTAINED MAJOR INJURIES, AND WAS TRANSPORTED TO THE HOSPITAL BY AMBULANCE. VEHICLE WAS TOWED TO THE DEALER FOR INSPECTION, AND MECHANIC COULD NOT DUPLICATE THE PROBLEM. CONSUMER WAS INVOLVED IN FIVE DIFFERENT ACCIDENTS DUE TO SUDDEN ACCELERATION. *AK
Additional Summary:

Toyota ID No:
NHTSA ODI No: 10074925
Date of Incident: 20040522
Vehicle: 2000 LEXUS LS400
Location of Incident: MINNETONKA, MN
NHTSA Summary:
THREE EVENTS OCCURRED WHERE MY 2000 LEXUS 400 ACCELERATED ON ITS OWN IN BEGINNING TO START MOVING BY RELEASING MY FOOT FROM THE BRAKE. THE FIRST INCIDENT OCCURRED IN CANNON FALLS MN. WE HAD COME TO A STOP AT A STOP LIGHT

AND WHEN THE TRAFFIC STARTED MOVING I LIFTED MY TOE FROM THE BRAKE AND THE CAR LEAPED FORWARD --- I IMMEDIATELY SLAMMED ON THE BRAKE AGAIN SINCE MY TOE WAS STILL ON THE BRAKE. IT LURCHED SEVERAL TIMES AND THEN QUITE. I BARELY STOPPED IT BEFORE HITTING THE CAR IN FRONT OF ME. IT HAPPENED AGAIN THE SAME WAY SEVERAL WEEKS LATER BUT NOT AS VIOLENT. THE THIRD TIME HAPPENED AS I WAS BRINGING MY CAR INTO LEXUS TO DIAGNOSE THE PROBLEM. THIS TIME IT VIOLENTLY LEAPT FORWARD CAUSING ME TO BRACE MYSELF ON THE STEERING WHEEL TO GET MORE LEVERAGE ON THE BRAKE. IT LURCHED FORWARD WHAT SEEMED TO BE IN JUMPS OF SIX INCHES TO A FOOT WITH ME PUSHING AS HARD AS I COULD ON THE BRAKE. FINALLY I HAD THE PRESENCE OF MIND TO SHIFT INTO NEUTRAL. AGAIN I BARELY WAS ABLE TO STOP IT BEFORE HITTING THE CAR IN FRONT OF ME. THIS IS A HIGHLY DANGEROUS CONDITION AND I HAVE TOLD LEXUS I WILL NOT DRIVE THE CAR AGAIN UNTIL IT IS FIXED. LEXUS IS LOOKING AT IT AND SO FAR CLAIMS THAT NOTHING IS WRONG. BE NOTHING CAN BE FOUND WITH THE DIAGNOSTICS. I AM WILLING TO LET NHTSA HAVE THE CAR FOR TESTING IF I CAN GET REPLACEMENT TRANSPORTATION DURING THE TESTING. NORM TALSOE. *AK
Additional Summary:

Toyota ID No:
NHTSA ODI No: 10075066
Date of Incident: 20010523
Vehicle: 2004 TOYOTA CAMRY
Location of Incident: NORWOOD, MA
NHTSA Summary:
VEHICLE IS A NEW 2004 TOYOTA CAMRY LE WITH 190 MILES ON IT WHEN THE INCIDENT OCCURRED. I STARTED THE VEHICLE AND SHIFTED FROM PARK TO REVERSE WITHOUT TAKING MY FOOT OFF THE BRAKE. THE VEHICLE RAPIDLY ACCELERATED AND TRAVELLED ABOUT TWO CAR LENGTHS BEFORE I WAS ABLE TO STOP IT *AK
Additional Summary:

Toyota ID No:
NHTSA ODI No: 10074132
Date of Incident: 20010524
Vehicle: 2003 TOYOTA TUNDRA
Location of Incident: SARASOTA, FL
NHTSA Summary:
CONSUMER APPLIED THE BRAKES AND VEHICLE WOULD SUDDENLY ACCELERATED ON ITS OW. CONSUMER PLACED BOTH FEET ON THE BRAKE PEDAL AND VEHICLE WOULD NOT STOP. CONSUMER WAS ABLE TO MAINTAIN CONTROL OF THE VEHICLE, AND DROVE IT TO THE DEALER FOR INSPECTION. HOWEVER, MECHANIC COULD NOT DUPLICATE THE PROBLEM. *AK
Additional Summary:

Toyota ID No:
NHTSA ODI No: 10075911
Date of Incident: 20010710
Vehicle: 2002 TOYOTA CAMRY
Location of Incident: DURHAM, NC
NHTSA Summary:
WHILE DRIVING VEHICLE EXPERIENCED SUDDEN ACCELERATION. CONSUMER WAS APPROACHING A STOP SIGN WHEN THE VEHICLE SUDDENLY LUNGED FORWARD INTO AN

INTERSECTION. HOWEVER, CONSUMER APPLIED THE BRAKES AND VEHICLE CAME TO A STOP. *AK
Additional Summary:

Toyota ID No:
NHTSA ODI No: 10074341
Date of Incident: 20010529
Vehicle: 2003 TOYOTA CAMRY
Location of Incident: ATLANTIC BEACH, FL
NHTSA Summary:
AS WE WERE PULLING OUT OF OUR PARKING SPACE ON THIS DAY, OUR 2003 TOYOTA CAMRY SEEMED TO ACCELERATE WHILE THE BRAKE WAS PRESSED. IN TURN WE SLAMMED INTO A PARKED CAR WHICH THEN HIT ANOTHER CAR, THAT HIT ANOTHER CAR. LUCKILY NONE WAS CRITICALLY INJURED THOUGH SOME MINOR INJURIES OCCURRED TO MY WIFE UPON IMPACT. ALSO, EVER SINCE WE HAVE BOUGHT THE CAR IT HAS DONE THIS FROM TIME TO TIME OR WE HAVE HAD TROUBLE WITH THE BRAKES. UPON TAKING TO THE DEALERSHIP NUMEROUS TIMES, THEY ASSURED ME THAT NOTHING WAS WRONG WITH THE BRAKES OR ANYTHING ELSE, I FEEL THAT THIS NEEDS TO BE THOROUGHLY INVESTIGATED BEFORE SOMEONE IS KILLED OR CRITICALLY INJURED. IN MY EYES THIS IS A MAJOR SAFETY CONCERN. NOT TO MENTION THE DAMAGE THAT WAS DONE TO OUR CAR AND THE OTHER INNOCENT VICTIMS' VEHICLES. *LA
Additional Summary:

Toyota ID No:
NHTSA ODI No: 10075107
Date of Incident: 20040601
Vehicle: 2002 TOYOTA CAMRY
Location of Incident: COLUMBUS, OH
NHTSA Summary:
1). SOON AFTER PURCHASE OF CAR, PROBABLY IN MAY OR JUNE OF 2002, I BEGAN TO PARK IN SPACE AT TARGET ON SAWMILL ROAD IN COLUMBUS, OHIO, WITH FOOT ON BRAKE PEDAL. CAR SUDDENLY SURGED FORWARD AND STRUCK THE REAR BUMPER OF PICKUP TRUCK. NO PERSONAL INJURIES OR DAMAGE TO CAR OR TRUCK. 2.) ON 5-5-04 SURGE OCCURRED WHILE DRIVING SLOWLY, LOOKING AT CONDOMINIUMS, WITH FOOT ON BRAKE PEDAL. NO CRASH, NO INJURIES, NO DAMAGES TO CAR. 3.) ON 5-14-04 I ENTERED PARKING SPACE ON SIDE OF CVS PHARMACY, 1985 W HENDERSON RD., UPPER ARLINGTON, OH 43220, WITH FOOT ON BRAKE PEDAL. CAR SUDDENLY SURGED FORWARD EVEN WITH BRAKE APPLIED AND STRUCK CONCRETE COLUMN. NO INJURIES OR MECHANICAL DAMAGE, BUT FRONT BUMPER WAS DENTED AND SCRATCHED. TOOK CAR TO TANSKY SAWMILL TOYOTA, BUT THEY COULD NOT FIND OR DUPLICATE THE SURGE. THEY CHECKED THE BRAKES, AND THERE WERE NO PROBLEMS. SEE VOQ 10074942 (DUPLICATE) *DSY. *AK
Additional Summary:

Toyota ID No:
NHTSA ODI No: 10097391
Date of Incident: 20040601
Vehicle: 2004 LEXUS ES350
Location of Incident: TUCSON, AZ
NHTSA Summary:

RE: SUPPLEMENT TO CONSUMER COMPLAINT #10091268 LEXUS RX 330
TRANSMISSION/THROTTLE PROBLEMS. *BF AUTOMATIC TRANSMISSION HESITATES, HUNTS, SHIFTS INCONSISTENTLY, HANGS IN BETWEEN GEARS, DELAYES, ETC. THE THROTTLE DELAYS AT THE FIRST APPLICATION OF GAS AND THE RATE OF ACCELERATION SURGES UP AND DOWN UNEVENLY. DEALER COULD NOT FIND A PROBLEM. *TT
Additional Summary:

Toyota ID No:
NHTSA ODI No: 10075632
Date of Incident: 20040603
Vehicle: 2003 TOYOTA CAMRY
Location of Incident: COLUMBIA, IL
NHTSA Summary:
VEHICLE ACCELERATED UPON PARKING NEAR A STOP WITH FOOT OFF ACCELERATOR AND ON BRAKE PEDAL. PLEASE PROVIDE ANY ADDITIONAL INFORMATION. *NM
Additional Summary:

Toyota ID No:
NHTSA ODI No: 10105341
Date of Incident: 20040605
Vehicle: 2001 TOYOTA 4RUNNER
Location of Incident: BURLINGAME, CA
NHTSA Summary:
THE CONSUMER EXPERIENCED SUDDEN ACCELERATION ON 3 SEPARATE OCCASIONS. *JB....*AK
Additional Summary:

Toyota ID No:
NHTSA ODI No: 10080317
Date of Incident: 20040608
Vehicle: 2000 TOYOTA CAMRY
Location of Incident: WEST MIFFLIN, PA
NHTSA Summary:
WHILE BRAKING UPHILL, RPMS ACCELERATED AT A HIGH RATE. DEALERSHIP WAS NOTIFIED, BUT DID NOT RESOLVE THE PROBLEM. *AK
Additional Summary:

Toyota ID No:
NHTSA ODI No: 10076212
Date of Incident: 20040614
Vehicle: 2003 TOYOTA CAMRY
Location of Incident: HOLLYWOOD, FL
NHTSA Summary:
WHILE PULLING INSIDE OF A PARKING SPACE VEHICLE SUDDENLY ACCELERATED. CONSUMER WAS UNABLE TO MAINTAIN CONTROL OF THE VEHICLE. CONSUMER PLACED BOTH FEET ON THE BRAKES, BUT VEHICLE CONTINUED TO ACCELERATE. IT JUMPED A CURB, AND COLLIDED WITH A GLASS WINDOW INSIDE A STORE. UPON IMPACT, BOTH FRONTAL AIR BAGS DID NOT DEPLOY. HOWEVER, THERE WERE NO INJURIES. *AK
Additional Summary:

Toyota ID No:
NHTSA ODI No: 10079287
Date of Incident: 20040615
Vehicle: 2000 TOYOTA CAMRY SOLARA
Location of Incident: SPRINGFIELD, VA
NHTSA Summary:
WHILE PULLING INSIDE OF A PARKING LOT, THE VEHICLE SUDDENLY ACCELERATED UNCONTROLLABLY WITHOUT WARNING. THE DRIVER WAS NOT ABLE TO MAINTAIN CONTROL OF THE VEHICLE. THE DRIVER PLACED BOTH FEET ON THE BRAKE PEDAL, BUT THE VEHICLE CONTINUED TO ACCELERATED INTO ANOTHER VEHICLE. BOTH FRONTAL AIR BAGS FAILED TO DEPLOY. THE DRIVER SUSTAINED HEAD AND NECK INJURIES AND WAS TRANSPORTED BY AMBULANCE TO THE HOSPITAL. THE VEHICLE WAS TOWED TO THE DEALER. PLEASE FILL IN ADDITIONAL INFORMATION. *LA
Additional Summary:

Toyota ID No:
NHTSA ODI No: 10052261
Date of Incident: 20040616
Vehicle: 2002 LEXUS ES300
Location of Incident: NORTON, MA
NHTSA Summary:
WHEN BACKING OUT OF A PARKING SPACE THE CAR WENT INTO A HIGH ACCELERATION. I REAR ENDED TWO CARS THAT WERE DIRECTLY BEHIND ME. IF THERE WAS ANYONE WALKING BEHIND I WOULD HAVE KILLED THEM. I BELIEVE THERE IS A THROTTLE CONTROL PROBLEM. *LA
Additional Summary:

Toyota ID No:
NHTSA ODI No: 10193437
Date of Incident: 20040616
Vehicle: 2004 TOYOTA HIGHLANDER
Location of Incident: WILTON, CA
NHTSA Summary:
1 MONTH AFTER PURCHASING THE TOYOTA THE HESITATION ON ACCELERATION BEGAN. I HAD THE COMPUTER PROGRAM FLASHED NUMEROUS TIMES. THE DEALERSHIP CLAIMED THEY HAVE DONE ALL THEY COULD. ENTERING HIGHWAYS OR TURNING CORNERS THE CAR STALLED UNTILL THE THROTTLE GRABBED, AND THEN TOOK OFF. IT JOLTED THE BODY AND MADE DRIVING THE TOYOTA HIGHLANDER VERY DIFFICULT. *AK
Additional Summary:

Toyota ID No:
NHTSA ODI No: 10101542
Date of Incident: 20040620
Vehicle: 2004 TOYOTA CAMRY
Location of Incident: ALVIN, TX
NHTSA Summary:
WHILE APPLYING THE ACCELERATOR PEDAL, THE VEHICLE HESITATED TO ACCELERATE. AFTER APPLYING THE ACCELERATOR PEDAL NUMEROUS TIMES THE VEHICLE ACCELERATED UNCONTROLLABLY. THE CONSUMER WAS ABLE TO MAINTAIN CONTROL

OF THE VEHICLE AND DROVE IT TO THE DEALER FOR INSPECTION. THE MECHANIC WAS NOT ABLE TO DUPLICATE THE PROBLEM. *JB
Additional Summary:

Toyota ID No:
NHTSA ODI No: 10064592
Date of Incident: 20040621
Vehicle: 2001 TOYOTA AVALON
Location of Incident: VAN NUYS, CA
NHTSA Summary:
INTERMITTENTLY AT A STOP VEHICLE SURGED. CONSUMER HAD TO PRESS HARD ON THE BRAKE PEDAL AND PUT VEHICLE INTO PARK TO STOP. *AK THE CONSUMER STATED THE DEALER WAS UNABLE TO DUPLICATE THE PROBLEM. *JB
Additional Summary:

Toyota ID No:
NHTSA ODI No: 10082295
Date of Incident: 20040625
Vehicle: 2004 TOYOTA CAMRY
Location of Incident: GREELEY, CO
NHTSA Summary:
THIS OCCURS ON A 2004 TOYOTA CAMRY WITH A 2.4L V4 AND A 5 SPEED AUTOMATIC TRANSMISSION. ON OCCASION WHEN SLOWING FROM A SPEED OF 30 MPH OR MORE, THE DRIVER RELEASES THE ACCELERATOR AND CAR HESITATES AND STUMBLES. BECAUSE OF NO RESPONSE, THE DRIVER WILL FLOOR THE ACCELERATOR. THERE WILL BE A 1-2 SECOND DELAY AND THEN THE ENGINE WILL RACE TO 3000 RPM AND THE CAR WILL TAKE OFF. DEALER HAS LOOKED AT THE CAR TWICE AND SAYS THERE IS NOTHING WRONG. TOYOTA AND THE DEALER STATE THAT THE CAR IS OPERATING AS DESIGNED AND THIS DELAY IS NORMAL FOR THIS CAR. IF IT IS NORMAL, WHY DOESN'T IT DO IT ALL THE TIME? *LA
Additional Summary:

Toyota ID No:
NHTSA ODI No: 10080199
Date of Incident: 20040628
Vehicle: 2003 TOYOTA CAMRY
Location of Incident: LANHAM, MD
NHTSA Summary:
THE CONSUMER STATED THE VEHICLE SURGED FORWARD EVEN WHEN THE HER FOOT WAS ON THE BREAK. THE BREAK PEDAL WENT ALL THE WAY TO THE FLOOR. WHEN APPLIED. PROVIDE FURTHER DETAILS. *JB
Additional Summary:

Toyota ID No:
NHTSA ODI No: 10080067
Date of Incident: 20040629
Vehicle: 2003 TOYOTA MATRIX
Location of Incident: CASTLETON, VT
NHTSA Summary:

WHILE DRIVING THE VEHICLE ACCELERATED WITHOUT WARNING. AS A RESULT THE CONSUMER HAD TO DODGE A VEHICLE AND DROVE INTO A CORN FIELD. THE CAUSE HAS NOT BEEN DETERMINED. PLEASE PROVIDE ADDITIONAL INFORMATION. *NM
Additional Summary:

Toyota ID No:
NHTSA ODI No: 10083750
Date of Incident: 20040701
Vehicle: 2000 LEXUS RX300
Location of Incident: PITTSBURGH, PA
NHTSA Summary:
PROBLEMS WITH UNINTENDED ACCELERATION IN 2000 LEXUS 300 *MB WITHIN THREE MONTH OF THE CONSUMER TAKING DELIVERY OF THE VEHICLE THE CONSUMER EXPERIENCED THREE INCIDENTS OF SUDDEN ACCELERATION. THE VEHICLE WAS TAKEN TO THE DEALER BUT THEY WERE UNABLE TO DUPLICATE THE PROBLEM. THE CONSUMER TRADED THE VEHICLE IN FOR A 2003 RX 300 AND HASN'T HAD ANY PROBLEMS. *NM
Additional Summary:

Toyota ID No:
NHTSA ODI No: 10094051
Date of Incident: 20040702
Vehicle: 2004 LEXUS ES330
Location of Incident: MCMURRAY, PA
NHTSA Summary:
WHEN APPLYING THE ACCELERATOR PEDAL VEHICLE HESITATED THEN SURGED FORWARD. CONSUMER WAS CONCERNED THAT HE WILL BE REAR ENDED *AK
Additional Summary:

Toyota ID No:
NHTSA ODI No: 10082824
Date of Incident: 20040702
Vehicle: 2001 LEXUS RX300
Location of Incident: THE WOODLANDS, TX
NHTSA Summary:
TWO (2) INCIDENTS OF SUDDEN ACCELERATION BY THE VEHICLE. - THE DEALER WAS NOT AWARE OF ANY SIMILAR ISSUES. I WAS NOT AWARE THAT NHTSA WAS CONDUCTING AN INVESTIGATION INTO SIMILAR OCCURRENCES WITH OTHER TOYOTA/LEXUS VEHICLES *AK
Additional Summary:

Toyota ID No:
NHTSA ODI No: 10096598
Date of Incident: 20040707
Vehicle: 2002 TOYOTA CAMRY
Location of Incident: ROSEVILLE, CA
NHTSA Summary:
UNINTENTIONAL ACCELERATION OF 2002 TOYOTA CAMRY LE MODEL WITH STABILITY CONTROL. (THIS CAR WAS MANUFACTURED IN THE US AND PURCHASED IN FOLSOM, CA IN MARCH 2002. WITHIN THE FIRST TWO YEARS THE CAR EXPERIENCED TWO CASES OF UNINTENTIONAL ACCELERATION. FORTUNATELY, SPEEDS WERE LOW AS THE CAR WAS

IN THE PROCESS OF STOPPING. BOTH TIMES THE ENGINE SUDDENLY RACED AND THE VEHICLE WOULD NOT STOP. THE DEALER SAID IT WAS NOT AWARE OF ANY PROBLEMS AND IT MUST BE THE WAY THE CAR WAS DRIVEN. THE SECOND TIME THE DEALER CHECKED THE SYSTEMS AND COULD FIND NOTHING. THE PROBLEM HAS NOT RECURRED. THERE IS THE POSSIBILITY OF A PROBLEM IN THE SOFTWARE THAT MAY HAVE BEEN CORRECTED WITHOUT OUR KNOWLEDGE. *TR
Additional Summary:

Toyota ID No:
NHTSA ODI No: 10020071
Date of Incident: 20040707
Vehicle: 2002 TOYOTA CAMRY
Location of Incident: BOWIE, MD
NHTSA Summary:
ON SATURDAY, JULY 7, 2004, I DROVE THE 2002 TO YOTA CAMRY IN BOWIE, MARYLAND HEADING SOUTH ON ROUTE 197, LAUREL-BOWIE ROAD. WHILE GOING UP A HILL, AT APPROXIMATELY 45 MPH, I PRESSED ON THE ACCELERATOR PEDAL. IMMEDIATELY, I LOST CONTROL OF THE CAR, AS IT SWERVED FIRST TO THE LEFT. BEWILDER, A CAR WAS TO MY LEFT, AND TO AVOID HITTING IT, I STEERED THE CAR RIGHT, TOWARDS THE CURB. FORTUNATELY I DID NOT HIT THE CAR. AS I STEERED TOWARDS THE RIGHT, THE CAR SPED AHEAD OF ME, AND I TRIED STEERING BACK TOWARDS THE LEFT TO AVOID THE CURB. TO CREATE FRICTION TO STOP THE CAR, I MADE A BIG ARC AND CROSSED FOUR LANES TO THE LEFT, WITH THE CAR FINALLY FACING NORTHBOUND. AFTER MAKING SURE NO CARS WERE COMING IN EITHER DIRECTION OF THE ROAD, I MADE A U-TURN AND SHEARED STRAIGHT TO MY HOUSE (~3 MILES AWAY). *JS
Additional Summary:

Toyota ID No:
NHTSA ODI No: 10041521
Date of Incident: 20040710
Vehicle: 2001 TOYOTA HIGHLANDER
Location of Incident: DRUMRIGHT, OK
NHTSA Summary:
WHILE DRIVING AT 10 MPH AND MOVING INTO A PARKING SPACE VEHICLE ACCELERATED AND SURGED AHEAD. THERE WERE NO INJURIES OR A COLLISION. *AK
Additional Summary:

Toyota ID No:
NHTSA ODI No: 10041756
Date of Incident: 20040712
Vehicle: 2002 TOYOTA AVALON
Location of Incident: TEHACHAPI, CA
NHTSA Summary:
WHILE PULLING INSIDE OF A PARKING SPACE VEHICLE SUDDENLY ACCELERATED UNCONTROLLABLY. CONSUMER WAS ABLE TO MAINTAIN CONTROL OF THE VEHICLE BY PLACING BOTH FEET ON THE BRAKE PEDAL, BUT VEHICLE CONTINUED TO ACCELERATED. CONSUMER TURNED OFF THE VEHICLE IN ORDER TO STOP. CONSUMER HAD THE VEHICLE TOWED TO THE DEALER FOR INSPECTION, AND MECHANIC COULD NOT DUPLICATE THE PROBLEM. *AK
Additional Summary:

Toyota ID No:
NHTSA ODI No: 10128340
Date of Incident: 20040722
Vehicle: 2002 TOYOTA CAMRY
Location of Incident: SAN JUAN CAPISTRANO, CA
NHTSA Summary:
OUR CAR IS A 2002 TOYOTA CAMRY LE WITH THE 4-CYLINDER ENGINE, AUTOMATIC TRANSMISSION, AND CRUISE CONTROL BUT IT DOES NOT HAVE ABS. I PURCHASED THE CAR FROM THE ORIGINAL OWNER IN OCTOBER 2003 AND, AT THE TIME OF THE ACCIDENT, HAD ABOUT 25,000 MILES ON IT. BASED ON THE ORIGINAL OWNER=[illegible]=S RECORDS AND MY OWN, NO ELECTRICAL WORK HAD EVER BEEN DONE ON THE CAR AND THE BATTERY WAS THE ORIGINAL. THE ACCIDENT OCCURRED ON JULY 22, 2004 IN MISSION VIEJO, CALIFORNIA IN BROAD DAYLIGHT AND IN CLEAR WEATHER. I ALLEGED WAS ALONE IN THE CAR AND WAS NOT HURT. THE AIR BAG DID NOT DEPLOY. THERE WAS ABOUT $5,500 IN DAMAGE. THE ACCIDENT OCCURRED AS MY WIFE WAS PARKING THE CAR WHEN SHE ARRIVED AT HER DOCTOR=[illegible]S OFFICE FOR AN APPOINTMENT. AS SHE MADE A LEFT TURN INTO A PARKING STALL, SHE SLOWED TO ALMOST A STOP HALF WAY INTO THE PARKING SPACE. THE GEAR LEVER WAS IN THE NORMAL DRIVE POSITION AND HER FOOT WAS ON THE BRAKE. SUDDENLY, THE CAR LURCHED FORWARD JUMPING OVER THE CEMENT PARKING SPACE BUMPER, OVER THE CURB AT THE END OF THE PARKING SPACE, AND SQUARELY INTO A BLOCK WALL JUST A FOOT BEYOND THE CURB. THE SURGE IN ACCELERATION MUST HAVE LASTED LESS THAN A SECOND SINCE THE TOTAL DISTANCE TRAVELED WAS ONLY ABOUT 6 TO 8 FEET AND YET RESULTED IN $5,500 DAMAGE. MY WIFE WAS REALLY SHAKEN BY THE INCIDENT AND HAS DRIVEN VERY LITTLE EVER SINCE. SHE SWORE HER FOOT WAS ON THE BRAKE ALL THE TIME. LATER, HOWEVER, SINCE THERE SEEMED TO BE NO OTHER POSSIBLE CAUSE, SHE CONVINCED MYSELF THAT HER FOOT MUST HAVE SLIPPED OFF THE BRAKE AND ONTO THE ACCELERATOR. EVENTUALLY, ARE ACCEPTED BLAME FOR THE ACCIDENT AND, AS A RESULT, OUR INSURANCE COMPANY RAISED OUR RATES CONSIDERABLY. AFTER THE CAR WAS REPAIRED, I TOOK IT TO A TOYOTA DEALER AND TOLD THEM ABOUT THE ACCIDENT. I ASKED THEM TO CHECK FOR ANY PROBLEMS WITH THE ACCELERATOR AND THEY FOUND EVERYTHING OPERATING=[illegible]=NORMALLY=[illegible]=S NO PROBLEMS WERE EVER IDENTIFIED WITH THE TRANSMISSION OR THE ACCELERATOR.
Additional Summary:

Toyota ID No:
NHTSA ODI No: 10028355
Date of Incident: 20040722
Vehicle: 2002 TOYOTA CAMRY SOLARA
Location of Incident: HOUSTON, TX
NHTSA Summary:
WHILE PULLING INTO A PARKING SPACE THE VEHICLE ACCELERATED SUDDENLY ALTHOUGH THE CONSUMER=S FOOT WAS STILL ON THE BRAKE PEDAL. THE VEHICLE JUMPED THE CURB AND CAME WITHIN 4 INCHES OF A STOREFRONT. THE VEHICLE WAS TOWED TO THE DEALER AND INSPECTED BY A REGIONAL REPRESENTATIVE. THE REPRESENTATIVE INDICATED THAT NOTHING WAS WRONG WITH THE VEHICLE. *NM
Additional Summary:

Toyota ID No:
NHTSA ODI No: 10042667
Date of Incident: 20040725
Vehicle: 2003 LEXUS ES300
Location of Incident: BUFFALO GROVE, IL

NHTSA Summary:
ONGOING AND WORSENING LACK OF ACCELERATION PREDICTABILITY. CAR WILL HESITATE ESPECIALLY WHEN POWER IS REQUIRED (SUCH AS MERGING TRAFFIC, LIFT TO ASS, ETC.) AUTOMATIC TRANSMISSION SOUNDS LIKE IT DELAYS ENGAGING WHEN NECESSARY. *AK
Additional Summary:

Toyota ID No:
NHTSA ODI No: 10000451
Date of Incident: 20040501
Vehicle: 2004 TOYOTA CAMRY
Location of Incident: NASHVILLE, IN
NHTSA Summary:
THIS COMPLAINT IS REGARDING A PROBLEM WITH ACCELERATION THAT I HAVE BEEN EXPERIENCING WITH MY 2004 TOYOTA CAMRY V6. AFTER APPLYING THE ACCELERATOR PEDAL, THE ENGINE HESITATES FOR A COUPLE OF SECONDS BEFORE RESPONDING ABRUPTLY. I PURCHASED THE CAR NEW ABOUT SIX MONTHS AGO, BUT THE ACCELERATION TROUBLE DID NOT BEGIN UNTIL AFTER I HAD BEEN DRIVING IT FOR ABOUT THREE MONTHS. WHEN I BROUGHT THE CAR IN FOR INSPECTION BY THE DEALERSHIP AFTER THE PROBLEM BEGAN, I WAS SIMPLY TOLD THAT THE COMPUTER HAD NOT FOUND ANY THING. SINCE THEN, THE PROBLEM HAS GOTTEN WORSE AND I HAVE BECOME INCREASINGLY RELUCTANT TO DRIVE THE CAR.*AK
Additional Summary:

Toyota ID No:
NHTSA ODI No: 10004607
Date of Incident: 20040601
Vehicle: 2004 LEXUS ES330
Location of Incident: LONG VALLEY, NJ
NHTSA Summary:
AT MOST SPEEDS, ESPECIALLY WHEN STOPPED OR AT SPEEDS BELOW 40 MPH, MY LEXUS ES330 HAS A SEVERE HESITATION/ACCELERATION DELAY THAT WHEN DEPRESSING THE ACCELERATOR PEDAL, ACCELERATION IS DELAYED AT LEAST 1.5 SECONDS. IS UNPREDICTABLE AND COMPROMISES SAFETY AND PLACES THE DRIVER AT RISK IN MOST DAY TO DAY DRIVING SCENARIOS. IT IS ALSO IMPOSSIBLE TO MATCH THE SPEED OF A VEHICLE IN FRONT WHEN IN BUMPER TO BUMPER TRAFFIC, WHEN THE ACCELERATOR PEDAL IS PRESSED, THE ES330 WILL CONTINUE TO ROLL FORWARD FOR A FEW SECONDS THEN ACCELERATE, IT WILL NOT "CREEP" AT THE SPEED OF TRAFFIC. I AM TOLD BY LEXUS THAT THIS IS NORMAL AND IS INHERENT IN THE VEHICLE DESIGN. IF THIS IS TRUE, ONE WOULD THINK THIS DESIGN FLAW WILL SOON ECLIPSE THE FIRESTONE/FORD EXPLORER INJURIES OF THE PAST.*AK
Additional Summary:

Toyota ID No:
NHTSA ODI No: 10112464
Date of Incident: 20040409
Vehicle: 2004 LEXUS ES330
Location of Incident: PALATINE, IL
NHTSA Summary:
I OWN A LEXUS 2004 ES 330, PURCHASED NEW. FROM DAY ONE THERE HAS BEEN A HESITATION IN ACCELERATION. THIS HAS PUT ME IN POSSIBLE DANGER MANY MANY TIMES. IN TALKING WITH THE DEALER, THEY WERE ARE AWARE OF THIS PROBLEM AND

SAID IT IS A SOFTWARE PROBLEM THAT THEY HOPE WILL BE FIXED. NOTHING TO DATE. I HAVE COMPLAINED ABOUT THIS NUMEROUS TIMES AND THEY AGREE THAT THIS COULD BE A VERY DANGEROUS SITUATION. AND THAT ALL THE ES 330S HAVE THIS PROBLEM. UNFORTUNATELY, LEXUS HAS NOT TAKEN THE TIME OR WANTED TO SPEND THE MONEY TO FIX THIS. THE DANGER IS REAL. CAN YOU HELP? THANKS. JANE ROBINS. *JS
Additional Summary:

Toyota ID No:
NHTSA ODI No: 10036350
Date of Incident: 20040401
Vehicle: 2001 LEXUS RX300
Location of Incident: CHESTER, NJ
NHTSA Summary:
THROTTLE STUCK WIDE OPEN FOLLOWING ROUTINE ACCELERATION GOING UP HILL. ENGINE CONTINUED AT HIGH REVS. CONTROL AND BRAKING WERE DIFFICULT AS ENGINE RACED UNCONTROLLABLY. VEHICLE STOPPED BY ENTERING INTO PARKING LOT AND BEING PUT IN PARK.*AK. AFTER 1 HOUR WHEN VEHICLE RESTARTED ENGINE IMMEDIATELY REVLINED IT DID THE SAME THE FOLLOWING DAY AND AT DEALER AFTER BEING TOWED IN, DIAGNOSIS FROM DEALER: THROTTLE CONTROL BODY STUCK. FORTUNATELY DRIVER DEALT WITH INTENTIALLY FATAL SITUATION WITHOUT INJURY OR DAMAGE. MANUFACTURER UNWILLING TO DISCLOSE SIMILAR EPISODES.
Additional Summary:

Toyota ID No:
NHTSA ODI No: 10006262
Date of Incident: 20040805
Vehicle: 2001 TOYOTA CELICA
Location of Incident: WATERBURY, CT
NHTSA Summary:
AFTER ONLY 32000 MILES, I HAD A SUDDEN AND SEVERE LOSS OF POWER IN ENGINE ALMOST LEADING TO STALLING. THE ENGINE WENT TO HIGH REVVING ABOUT 8K RPMS AND A BURNING OIL SMELL. WITH THE CLIMBING HILLS, EVASIVE MANEUVERS, AND OTHER ACCELERATION ISSUES ALMOST CAUSED CRASHES BECAUSE THEY WERE SO SUDDEN AND SEVERE. THE DEALER SAID THE CLUTCH WAS BURNT, BUT IT WAS SO SUDDEN AND WITHOUT ANY WARNING.*AK
Additional Summary:

Toyota ID No:
NHTSA ODI No: 10091195
Date of Incident: 20040808
Vehicle: 2002 LEXUS ES300
Location of Incident: WHITESTONE, NY
NHTSA Summary:
IN AUGUST I WENT TO PARK MY CAR (2002 ES300) IN MY DRIVEWAY WHEN ALL OF A SUDDEN IT PICKED UP SPEED, CRASHING THROUGH MY BRAND NEW FENCE AND SIDE PORCH. IT MUST BE NOTED THAT I HAD MY FOOT ON THE BRAKE. THE CAR WAS STOPPED AND ALL OF A SUDDEN IT TOOK OFF ON ME. MY FOOT NEVER MOVED OFF THE BRAKE THE WHOLE TIME. THE CAR CAME TO A STOP WHEN IT HIT THE PORCH. THE DAY BEFORE I WAS DRIVING WITH MY MOM AND AS I STARTED TO SLOW THE CAR DOWN BEC I WAS COMING TO A STOP SIGN. THE CAR ALL OF A SUDDEN PICKED UP SPEED. BUT THANKFULLY AT THAT TIME I HAD TIME TO PRESS THE BRAKES DOWN HARDER AND

STOP THE CAR. WHEN I PARK MY CAR IN THE DRIVEWAY IT IS ONLY A COUPLE OF INCHES FROM THE GATE AND FROM THE GATE IT IS ABOUT 2-3 FEET TO THE FORCH SO THERE WAS NO WAY TO AVOID THIS ACCIDENT. WHEN LEXUS INSPECTED THE CAR THEY FOUND NOTHING WRONG WITH THE DRIV ELECTRONIC THROTTLE CONTROLLI FIND THIS TO BE A COVERUP OF SOME SORTS BECAUSE I HAVE BEEN DRIVING FOR YEARS AND NEVER HAD THIS HAPPEN TO ME BEFORE. I KNOW FIRST HAND THAT IT IS NOT A DRIVER ERROR IT IS A MANUFACTOR'S DEFECT. I KNOW IT WENT INTO INVESTIGATIONS AND THEY ARE NOT RECALLING THE CARS BECAUSE THERE WAS NOT ENOUGH EVIDENCE THAT THIS REALLY HAPPENS. SINCE I'VE BEEN BRINGING THIS ISSUE TO LIGHT I RECENTLY FOUND OUT THAT THE SAME THING HAPPENED TO MY HUSBAND'S FRIENDS WIFE LAST YEAR. HER CAR TOOK OFF ON HER AND WENT THROUGH HER GARAGE. THIS IS VERY DANGEROUS AND I DO NOT FEEL SAFE DRIVING MY CAR. I FEEL THAT LEXUS IS REALLY IN A POSITION WHERE THEY DON'T HAVE TO DO ANYTHING BECAUSE THE NHTSA DEEMED THERE WAS NOTHING WRONG WITH THE CAR CAUSING THE UNINTENDED ACCELERATION. BOTH THE DEALERSHIP AND MANUFACTURER DID NOT WANT TO TAKE ANY RESPONSIBILITY WHAT SO EVER FOR THIS INCIDENT. THEY WERE VERY HELPFUL WHEN I PURCHASED THE CAR BUT WIPED THERE HANDS OF ANY PROBLEMS WITH THE VEHICLE. *AK

Additional Summary:

Toyota ID No:
NHTSA ODI No: 10087304
Date of Incident: 20040209
Vehicle: 2002 TOYOTA CAMRY
Location of Incident: PARIS, KY
NHTSA Summary:
WHILE PARKING THE VEHICLE SUDDENLY ACCELERATED. WHEN THE VEHICLE WAS FINALLY PARKED AND THE CONSUMERS FOOT WAS OFF THE ACCELERATOR AND ON THE BRAKE THE VEHICLE JUMPED OVER PARKING BUMP AND HIT A POST. THE DRIVER HAD NO CONTROL ON THE VEHICLE. DEALERSHIP WAS NOTIFIED. *AK. THE VEHICLE SUSTAINED FRONT END DAMAGE. *NM

Additional Summary:

Toyota ID No:
NHTSA ODI No: 10089675
Date of Incident: 20040400
Vehicle: 2000 TOYOTA CAMRY
Location of Incident: WHEATON, MD
NHTSA Summary:
WHILE APPLYING THE ACCELERATOR PEDAL VEHICLE ACCELERATED UNCONTROLLABLY. CONSUMER WAS NOT ABLE TO MAINTAIN CONTROL OF THE VEHICLE AND COLLIDED WITH THE VEHICLE IN FRONT. UPON IMPACT BOTH FRONTAL AIR BAGS FAILED TO DEPLOY. DRIVER SUSTAINED MINOR INJURIES AND WAS TRANSPORTED TO THE HOSPITAL BY AN AMBULANCE. THE VEHICLE WAS TOWED TO THE DEALER FOR INSPECTION. *AK

Additional Summary:

Toyota ID No:
NHTSA ODI No: 10087644
Date of Incident: 20040806
Vehicle: 2004 TOYOTA CAMRY
Location of Incident: SAVAGE, MD

NHTSA Summary:
DRIVER'S DOOR HANDLE STUCK WHILE DRIVER TRIED TO OPEN THE DOOR. VEHICLE WAS TAKEN TO THE DEALER FOR INSPECTION, AND MECHANIC COULD NOT DUPLICATE THE PROBLEM. ALSO, WHILE APPLYING THE ACCELERATOR PEDAL VEHICLE HESITATED AND STALLED. CONSUMER, RESTARTED THE VEHICLE, AND DROVE IT TO THE DEALER FOR INSPECTION, BUT MECHANIC COULD NOT DUPLICATE THE PROBLEM. *AE

Additional Summary:

Toyota ID No:
NHTSA ODI No: 10107369
Date of Incident: 20040809
Vehicle: 2004 TOYOTA CAMRY
Location of Incident: JACKSON, MI
NHTSA Summary:
WHILE BACKING OUT OF A PARKING SPACE ACCELERATOR STUCK, CAUSING CONSUMER'S VEHICLE TO STRIKE ANOTHER VEHICLE. THE MANUFACTURER FOUND NO DEFECTS *AK

Additional Summary:

Toyota ID No:
NHTSA ODI No: 10104489
Date of Incident: 20040810
Vehicle: 2004 TOYOTA HIGHLANDER
Location of Incident: BRANDON, FL
NHTSA Summary:
MY 2004 TOYOTA HIGHLANDER MAKES A TERRIBLE HUMMING / MOANING SOUND ON ACCELERATION THAT RESONATES WITHIN THE VEHICLE AND DISTURBS THE DRIVER. THE PROBLEM TYPICALLY OCCURS DURING BREEDING UP FROM 0 MPH, IT IS TERRIBLY FRUSTRATING THAT A BRAND NEW CAR MAKES SUCH A ANNOYING SOUND. IT ALSO HESITATES A LOT DURING 20-40 MPH SPEED RANGE. THE VEHICLE DOES NOT RESPOND AS IT SUPPOSED TO ON ACCELERATION AND THAT TOO SPECIALLY WHILE DRIVING WITHIN THE CITY. ON CANTACTING THE DEALER AND TOYOTA'S NATIONAL CUSTOMER SERVICE THAY SAID IT IS DESIGNED TO BE LIKE THAT AND THE HESITATION IS A BY-PRODUCT OF COMPUTER CONTROLLED AUTOMATIC TRANSMISSION. CURRENTLY THERE IS NO FIX FOR THIS. AM TERRIBLY FRUSTRATED NOW AND PROMISE TO NEVER BUY ANY VEHICLE FROM TOYOTA IN FUTURE. I WOULD ALSO MAKE SURE THAT MY FRIENDS AND RELATIVES DOES NOT GO NEAR A TOYOTA DEALER. I AM DESPERATE IN GETTING RID OF THIS VEHICLE. *AK

Additional Summary:

Toyota ID No:
NHTSA ODI No: 10088430
Date of Incident: 20040812
Vehicle: 2004 TOYOTA HIGHLANDER
Location of Incident: COOS BAY, OR
NHTSA Summary:
CAR HAS AN UNACCEPTABLE LAG WHEN ACCELERATING. *AK

Additional Summary:

Toyota ID No:
NHTSA ODI No: 10086181

Date of Incident: 20060213
Vehicle: 2001 TOYOTA CAMRY
Location of Incident: WHITING, NJ
NHTSA Summary:
ONGOING PROBLEM WITH APPLICATION OF BRAKES AND CAR ACCELERATING FORWARD. INCIDENTS ON 7/8/04 & 8/11/04 INCIDENTS HAVE BEEN REPORTED BEFORE TO NHTSA ON 4/23/04 REFERENCE#10 1432 TOOK CAR TO DEALER TOYOTA REP AND SERVICEMAN COULD NOT FIND PROBLEM. HAS OFFERED U TAKE CAR IN FOR 1 WEEK AND HAVE TECHS DRIVE THIS IS 5 INCIDENT ASKED TOYOTA TO SWAP CAR FOR OR TRADE FOR OTHER CAR WAS INFORMED MY CAR HAD PROBLEM AND WAS NOT POSSIBLE AT THIS TIME. THIS CAR HAS PROBLEM WITH ETS AND IT IS TIME FOR TOYOTA TO DO SOMETHING I AM NOT IN THIS FOR GAIN JUST WANT THE PROBLEM SOLVED OR CAR SWAPPED FOR EQUIVALENT I HAVE EXHAUSTED ALL MEANS FOR A RESOLUTION AND FEEL I NEED ARBITRACTION FROM TOYOTA. HEARING THAT THIS CAR HAS NO PROBLEM IS OLD AND WOULD APPRECIATE ANY ASSISTANCE IN THIS MATTER. *AK

Additional Summary:

Toyota ID No:
NHTSA ODI No: 10081116
Date of Incident: 20040817
Vehicle: 2000 TOYOTA CAMRY SOLARA
Location of Incident: ORANGE, CA
NHTSA Summary:
TIME & PLACE OF ACCIDENT 9:00AM, 8-17-04 TOOL BROTHERS IRONWOOD MODEL/SALES OFFICE PARKING LOT 14110 WATSON WAY YORBA LINDA CA THIS PLACE OF EMPLOYMENT. AFTER ENTERING SALES MODEL'S PARKING LOT FROM WATSON WAY, I WAS BRAKING AT APPROXIMATELY 5MPH ALLOWING TO PARK NEXT TO HANDICAPPED PARKING SPACE. SUDDENLY I NOTED ENGINE RPM'S ACCELERATING RAPIDLY I TRIED TO SHIFT AUTO IN TO PARK POSITION AS THE AUTO JUMPED CEMENT ABUTMENTS STOPS, VERSED RIGHT, NOSED DOWN SIDEWALK KNOCKING DOWN SMALL TREE IN LANDSCAPED AREA, VEERED TOWARDS DRIVERS SIDE OF RED JEEP WAGON, CORRECTED FOWARDS WALK WAY (WEAT) AND SWIPED DRIVER'S SIDE FRONT BUMPER OF RED JEEP. TOYOTA CAME TO STOP AFTER HITTING AND BECOMING IMPALED ON TOP OF STARWELL WALLS IN FRONT OF JEEP I WAS TRANSPORTED TO CHAPMAN MEDICAL CENTER IN ORANGE CA BY SETH BING SENIOR PROJECT MANAGER FOR TOOL BROTHERS AND WAS CHECKED FOR MUSCLE STRAIN LEFT FOREARM OVER ALL O.K. AIR BAG DID NOT DEPLOY. SKID MARKS NOTED DOWN SIDEWALK FROM PARKING SPACE TO STOPPING POINT AT STARWELL. AWAITING CLAIMS ADJUSTMENT. *TR

Additional Summary:

Toyota ID No:
NHTSA ODI No: 10089082
Date of Incident: 20040817
Vehicle: 2001 LEXUS RX300
Location of Incident: CHESTER, NJ
NHTSA Summary:
CONSUMER'S SON WAS DRIVING VEHICLE ON AUGUST 3, 2004 AT 25 MPH UPHILL WHEN SUDDENLY THE ACCELERATOR STUCK. VEHICLE RED LINED UP THE HILL, AND WHEN IT REACHED THE TOP OF THE HILL, THE MOTOR WAS STILL RACING. CONSUMER'S SON MANAGED TO GET THE VEHICLE ON THE SIDE OF THE ROAD, AND CUT THE VEHICLE OFF. IT WAS WITNESSED BY POLICE OFFICER, WHO WAS AT THE TOP OF THE HILL. THEN POLICE OFFICER ASKED CONSUMER'S SON TO RESTART THE VEHICLE, AND THE MOTOR IMMEDIATELY BEGUN TO RACE, RED LINING AGAIN. HE WAS THEN ASKED TO TURN THE

VEHICLE OFF, ALLOWING IT TO COOL DOWN. THEN, THE TOW TRUCK WAS CALLED BY THE POLICE OFFICER. WHEN THE TOW TRUCK ARRIVED ON THE SCENE CONSUMER'S SON WAS AGAIN ASKED TO RESTART THE VEHICLE, AND VEHICLE REPEATED THE SAME THING, TO RED LINED. THE VEHICLE WAS TURNED OFF, AND TOWED TO A LEXUS DEALER. *AE

Additional Summary:

Toyota ID No:
NHTSA ODI No: 10089159
Date of Incident: 20040810
Vehicle: 2004 TOYOTA CAMRY
Location of Incident: UKIAH, CA
NHTSA Summary:
THE DRIVER WAS PULLING INSIDE OF THE DRIVEWAY AND VEHICLE SUDDENLY ACCELERATED. CONSUMER APPLIED BOTH FEET ON THE BRAKE PEDAL IN ORDER TO STOP, AND VEHICLE CONTINUED TO ACCELERATE INTO THE GARAGE WALL. CONSUMER WAS NOT INJURED. CONSUMER HAD THE VEHICLE TOWED TO THE DEALER FOR INSPECTION, AND MECHANIC STATED THAT THE PROBLEM COULD NOT BE DUPLICATED. CONSUMER INFORMED THE MECHANIC THIS PROBLEM OCCURRED MORE THAN ONCE, AND HAD NOT BEEN RESOLVED. MECHANIC INFORMED CONSUMER THAT A REPRESENTATIVE WOULD COME DOWN TO INSPECT THE VEHICLE. *AK

Additional Summary:

Toyota ID No:
NHTSA ODI No: 10113040
Date of Incident: 20040818
Vehicle: 2002 TOYOTA CAMRY
Location of Incident: WESTBURY, NY
NHTSA Summary:
VEHICLE IS EXPERIENCING A PROBLEM WITH SUDDEN ACCELERATION. OWNER WAS DRIVING DOWN THE ROAD AT APPROXIMATELY 45 MPH WHEN THE OWNER APPLIED THE BRAKES. THE VEHICLE BEGAN TO ACCELERATE WITHOUT WARNING. THE OWNER HAD TO TURN OFF THE ENGINE, IN ORDER TO STOP THE VEHICLE. PROVIDE FURTHER DETAILS. *NM

Additional Summary:

Toyota ID No:
NHTSA ODI No: 10088657
Date of Incident: 20040826
Vehicle: 2003 TOYOTA HIGHLANDER
Location of Incident: MILL VALLEY, CA
NHTSA Summary:
MY 2003 TOYOTA HIGHLANDER ACCELERATED AT A HIGH RATE OF SPEED WHILE THE BRAKE WAS FULLY APPLIED AS I TURNED INTO A PARKING SPOT. LUCKILY, IT HAPPENED WHEN I WAS 60% OR SO INTO THE SPACE, AS I ONLY ACCELERATED INTO A BRICK WALL, NOT ANOTHER CAR OR PERSON. *AK

Additional Summary:

Toyota ID No:
NHTSA ODI No: 10092195
Date of Incident: 20040901

Vehicle: 2001 TOYOTA COROLLA
Location of Incident: BRONX, NY
NHTSA Summary:
WHILE DRIVING DOWN AN INCLINE, THE VEHICLE SUDDENLY ACCELERATED. *JB THE VEHICLE WAS TAKEN TO THE DEALER BUT THEY WERE UNABLE DETERMINE THE CAUSE. *NM
Additional Summary:

Toyota ID No:
NHTSA ODI No: 10106940
Date of Incident: 20041002
Vehicle: 2004 LEXUS ES330
Location of Incident: PALM BEACH GARDENS, FL
NHTSA Summary:
VEHICLE SURGED WHEN CRUISE CONTROL WAS ENGAGED AT 60 MPH. IT SURGED UP TO 80 MPH. IT HILT LICKLY WAS GOING DOWN HILL. DEALER COULD NOT DUPLICATE THE PROBLEM. ALSO, TRANSMISSION HESITATED AT 0-20 MPH. IT ALSO JERKED. *AK.....LEXUS HAS ADMITTED THE PROBLEM, BUT MAINTAINED THAT VEHICLE DROVE AS DESIGNED. HESITATION PROBLEM EXPERIENCED BY MANY LEXUS ES330 CAR VEHICLE HESITATION, THEN WILL LURCH FORWARD WHEN ACCELERATING A FLOW SPEEDS. LEXUS HAS ADMITTED THE PROBLEM, BUT INSISTED VEHICLE DROVE AS DESIGNED. *AK
Additional Summary:

Toyota ID No:
NHTSA ODI No: 10092244
Date of Incident: 20041009
Vehicle: 2002 TOYOTA CAMRY
Location of Incident: CHARLOTTESVILLE, VA
NHTSA Summary:
THE ACCELERATOR ON THE VEHICLE BECAME STUCK. THE PEDAL, LEFT THE FOOT AND THE BRAKE WAS NOT RESPONDING. THE CONSUMER THEN TRIED TO JUMP ON THE ACCELERATOR HOPING TO LOOSEN IT, INSTEAD, THE VEHICLE BEGAN TO ACCELERATE AND THE CONSUMER HAD TO TURN THE KEY OFF BEFORE THE VEHICLE WOULD STOP. THE CONSUMER CRASHED INTO AN EARTHBANK. PROVIDE FURTHER DETAILS. *JB
Additional Summary:

Toyota ID No:
NHTSA ODI No: 10092244
Date of Incident: 20041009
Vehicle: 2002 TOYOTA CAMRY
Location of Incident: LOMITA, CA
NHTSA Summary:
WHILE PARKING VEHICLE ACCELERATED AND CRASHED INTO A WALL. UPON IMPACT, AIR BAGS DID NOT DEPLOY. NO INJURIES REPORTED. *AK
Additional Summary:

Toyota ID No:
NHTSA ODI No: 10096389
Date of Incident: 20041009
Vehicle: 2005 LEXUS LX470
Location of Incident: DENNIS, MA

NHTSA Summary:
(1) CAR WAS NEARLY NEW, ONLY 100 MILES. NO ABNORMAL BEHAVIOR UP TO THAT POINT. (2) WHILE SHIFTING INTO PARK AS PART OF THE PROCESS OF PARKING, AND WITH NO PRESSURE ON ACCELERATOR, CAR SUDDENLY LURCHED FORWARD, SUPRIZING CONCRETE STANCHEON OF PARKING LOT LIGHT POLE. THIS RESULTED IN DAMAGE TO THE FRONT BUMPER, FRAME, RIGHT QUARTER PANEL, RIGHT HEADLIGHT ASSEMBLY, CAUSING OVER $4,000 IN REPAIR COSTS. (3) ABOVE PROBLEMS WERE REPAIRED BY A DEALER-APPROVED AUTO BODY SHOP. *AK
Additional Summary:

Toyota ID No:
NHTSA ODI No: 10091231
Date of Incident: 20040910
Vehicle: 2004 TOYOTA HIGHLANDER
Location of Incident: WHITTIER, CA
NHTSA Summary:
HESITATION ON ACCELERATION. *AK
Additional Summary:

Toyota ID No:
NHTSA ODI No: 10125832
Date of Incident: 20040915
Vehicle: 2004 TOYOTA CAMRY
Location of Incident: ATLANTA, GA
NHTSA Summary:
CONSUMER COMPLAINED ABOUT AN ACCELERATION PROBLEM. WHILE DRIVING AT APPROXIMATELY 15 MPH, DRIVER WOULD STEP ON THE ACCELERATOR AND THE VEHICLE WOULD BEGAN TO HESITATE. THEN, THE SPEED WOULD CONTINUE TO DECREASE EVEN WHEN THE ACCELERATOR PEDAL WAS PUSHED DOWN TO THE FLOOR. THIS HAPPENED WITHOUT WARNING. OWNER CONTACTED THE MANUFACTURER AND THE DEALER. THE DEALER HAS HAD THE VEHICLE FOR A MONTH. HOWEVER, THEY WERE UNABLE TO DUPLICATE THE PROBLEM. *AK
Additional Summary:

Toyota ID No:
NHTSA ODI No: 10126902
Date of Incident: 20040915
Vehicle: 2003 TOYOTA CAMRY SOLARA
Location of Incident: FORT MEYERS, FL
NHTSA Summary:
DT.. THE SHIFTING MECHANISM IN THE VEHICLE DELAYS WHEN GOING AROUND THE CORNER. WHEN PUSHING ON THE ACCELERATOR TRANSMISSION HESITATED. THE VEHICLE HAS BEEN TO THE SERVICE DEPARTMENT 3 OR 4 TIMES. DEALERSHIP STATED IT WAS THE WAY THE VEHICLE WAS SUPPOSE TO WORK. COMPUTER WAS REPROGRAMMED ONCE. IT MADE IT A LITTLE BETTER, BUT DID NOT SOLVE THE PROBLEM. THE SERVICE DEPARTMENT STATED THERE WAS NO OTHER SOLUTION FOR THIS. THIS STARTED EIGHT AFTER THE VEHICLE WAS PURCHASED. IT HAPPENED MAINLY WHEN THE VEHICLE COASTED AND THE ACCELERATOR WAS PUSHED AFTERWARDS. *AK
Additional Summary:

Toyota ID No:
NHTSA ODI No: 10097679
Date of Incident: 20041016
Vehicle: 2004 TOYOTA CAMRY
Location of Incident: BETHESDA, MD
NHTSA Summary:
UNEXPECTEDLY, WITHOUT PRESSING ON THE GAS PEDAL, CAR RAPIDLY ACCELERATED. *BF THE CONSUMER STATED HE HIT A BUILDING AND THE AIR BAG DID NOT DEPLOY. *JB
Additional Summary:

Toyota ID No:
NHTSA ODI No: 10170510
Date of Incident: 20041019
Vehicle: 2004 TOYOTA CAMRY SOLARA
Location of Incident: LARGO, FL
NHTSA Summary:
THROTTLE LAG AT LOW SPEED AND FROM STOP IS INCONSISTANT AND HAS BEEN THE CAUSE FOR SEVERAL CLOSE CALLS WHEN PULLING INTO TRAFFIC. MANUFACTURER WAS INFORMED, DEALER INVESTIGATED, STATES THIS IS NORMAL AND NOTHING CAN BE DONE. THAT LAG IS "ACCEPTABLE". SOME INSTANCES HAVE BEEN SEVERAL SECONDS BEFORE ACTUAL THROTTLE RESPONSE. DRIVER HAS TO USE HARDER ACCELERATION TO COMPENSATE WHEN THIS HAPPENS. THIS IS A SAFETY ISSUE THAT TOYOTA IS AWARE OF BUT DECLINES TO ADMIT IT IS A PROBLEM. DRIVER IS VERY CONCERNED THAT THIS ISSUE WILL BE CAUSE OF AN ACCIDENT. *NM
Additional Summary:

Toyota ID No:
NHTSA ODI No: 10099539
Date of Incident: 20041020
Vehicle: 2000 TOYOTA CAMRY
Location of Incident: CAMPBELL, CA
NHTSA Summary:
WHEN DRIVING 30 MPH RPMS ACCELERATED TO 80 MPH. THIS CAUSED THE CONSUMER TO GO OFF THE SIDE OF THE ROAD, CAUSING DAMAGE TO THE VEHICLE. DEALERSHIP WAS NOTIFIED, BUT DID NOT RESOLVE THE PROBLEM. *AK
Additional Summary:

Toyota ID No:
NHTSA ODI No: 10094159
Date of Incident: 20041020
Vehicle: 2004 TOYOTA RAV4
Location of Incident: HARTSELLE, AL
NHTSA Summary:
THE ACCELERATOR BECAME STUCK WHILE THE CONSUMER WAS DRIVING. THE CONSUMER WENT OVER A CURB AND FLATTENED HER TIRE. THIS IS THE SECOND INCIDENT. *JB
Additional Summary:

Toyota ID No:
NHTSA ODI No: 10093055

Date of Incident: 20040921
Vehicle: 2003 TOYOTA CAMRY
Location of Incident: ESCONDIDO, CA
NHTSA Summary:
WHILE BACKING OUT OF DRIVEWAY, WITH FOOT ON BRAKE PEDAL, I SHIFTED THE 2003 CAMRY FROM PARK INTO REVERSE. THE CAR IMMEDIATELY ACCELERATED BACKWARD AT HIGH SPEED OUT OF DRIVEWAY, CROSSED THE ROAD, AND CRASHED INTO A TREE. 3 PEOPLE IN CAR, NO INJURIES. SO FAR, ESTIMATED BODY DAMAGE IS ABOUT $8000, BUT UNDERCARRIAGE HAS YET TO BE INSPECTED. REASON FOR SUDDEN ACCELERATION IS UNKNOWN.AK
Additional Summary:

Toyota ID No:
NHTSA ODI No: 10091416
Date of Incident: 20040928
Vehicle: 2003 TOYOTA CAMRY
Location of Incident: LA FOLLETTE, TN
NHTSA Summary:
WHEN THE GEAR WAS PLACED IN REVERSE, THE VEHICLE SUDDENLY ACCELERATED AND HIT A CONCRETE WALL. PLEASE PROVIDE FURTHER INFORMATION. *JB GAS PEDOLE STICK AND BRAKES WOULD NOT HOLD THE CAR FROM MOVING. CONSUMER WAS INJURED AS A RESULT OF ACCIDENT. THE CONSUMER SPRAINED HER LEG AS A RESULT OF PUTTING SO MUCH FORCE ON THE BRAKE TRYING TO STOP THE VEHICLE. *TC
Additional Summary:

Toyota ID No:
NHTSA ODI No: 10084573
Date of Incident: 20040928
Vehicle: 2004 TOYOTA CAMRY
Location of Incident: PERTH AMBOY, NJ
NHTSA Summary:
WHEN APPLYING THE ACCELERATOR PEDAL VEHICLE HESITATED THEN SURGED FORWARD. CONSUMER WAS CONCERNED THAT THE VEHICLE WILL BE REAR ENDED.*AK
Additional Summary:

Toyota ID No:
NHTSA ODI No: 10109320
Date of Incident: 20040928
Vehicle: 2004 TOYOTA CAMRY
Location of Incident: PERTH AMBOY, NJ
NHTSA Summary:
VEHICLE SUDDENLY EXPERIENCED A SURGE IN ACCELERATION. *BF THE CONSUMER STATED THE PROBLEM HAPPENED WHEN THE GAS PEDAL WAS APPLIED HARD. *JB
Additional Summary:

Toyota ID No:
NHTSA ODI No: 10159364
Date of Incident: 20040928
Vehicle: 2003 TOYOTA CAMRY
Location of Incident: SUGAR GROVE, IL
NHTSA Summary:

WHILE STOPPED AT AN INTERSECTION, THE ENGINE SUDDENLY AND UNEXPECTEDLY BEGAN TO REV UNCONTROLLABLY WITHOUT ANY INPUT FROM ME. DUE TO THE HIGH REVOLUTIONS OF THE ENGINE THE BRAKES WERE INCAPABLE OF PREVENTING THE CAR FROM MOVING FORWARD EVEN THOUGH THE BRAKE PEDAL WAS FULLY DEPRESSED. THE ONLY WAY TO PREVENT MY CAR FROM HITTING THE CAR IN FRONT OF ME WAS TO SHUT OFF THE ENGINE. TWO SUBSEQUENT ATTEMPTS TO RESTART THE ENGINE RESULTED IN A REPEAT OF THE OVER-REVVING SITUATION. ONLY AFTER THE THIRD ATTEMPT DID THE ENGINE RESUME NORMAL OPERATION. A PASSENGER IN THE CAR AT THE TIME VERIFIED THAT THE ACCELERATOR WAS NOT ENGAGED AT ANY TIME DURING THE INCIDENT. THE CAR WAS IMMEDIATELY DRIVEN TO THE DEALER WHO INSPECTED IT AND FOUND NO FAULT WITH THE ETC SYSTEM AND NO STORED CODES THAT WOULD VERIFY MY COMPLAINT. THE CAR WAS SUBSEQUENTLY RETURNED TO US AND WAS DRIVEN WITHOUT INCIDENT FOR THE NEXT NINETEEN MONTHS BEFORE THE PROBLEM ONCE AGAIN PRESENTED itself. AS WE WERE PULLING INTO A PARKING SPACE WHILE MY FOOT WAS ON THE BRAKE PEDAL THE ENGINE ONCE AGAIN BEGAN TO OVER-REV WITHOUT ANY INPUT FROM ME. AGAIN, THE PASSENGER IN THE CAR WHO HAD WITNESSED THE FIRST INCIDENT IMMEDIATELY LOOKED TO SEE IF THE ACCELERATOR WAS ACCIDENTALLY BEING DEPRESSED. IT WAS NOT. AGAIN, THE ONLY MEANS OF PREVENTING MY CAR FROM STRIKING THE VEHICLE IN FRONT OF ME WAS TO SHUT OFF THE ENGINE. *NM
Additional Summary:

Toyota ID No:
NHTSA ODI No: 10084597
Date of Incident: 20010910
Vehicle: 2004 TOYOTA CAMRY SOLARA
Location of Incident: REDDING, CA
NHTSA Summary:
WHEN APPLYING THE ACCELERATOR PEDAL VEHICLE HESITATED. *AK
Additional Summary:

Toyota ID No:
NHTSA ODI No: 10114104
Date of Incident: 20010925
Vehicle: 2000 LEXUS LS400
Location of Incident: NORTH WOODMERE, NY
NHTSA Summary:
HT: THE CALLER SAID WHILE DRIVING 50 MPH THE VEHICLE ACCELERATED TO A FASTER SPEED VERY QUICKLY. THERE WAS AN ACCIDENT. THE CALLER SUSTAINED INJURIES. A POLICE REPORT WAS TAKEN. THE CALLER SAID THE VEHICLE WAS ACCELERATING WITHOUT WARNING FOR ABOUT A YEAR. THE CALLER CALLED THE MANUFACTURER THE DAY OF THE ACCIDENT AND TOLD THEM ABOUT THE PROBLEM. DEALER SAID THEY WOULD GET BACK TO HIM. HE WAS TOLD NOTHING WAS WRONG WITH THE CAR A FEW WEEKS BEFORE THE ACCIDENT. DEALER WAS CONTACTED AFTER THE ACCIDENT, AND THEY SAID THEY WILL SET UP AN APPOINTMENT TO FIND THE CAUSE OF THE PROBLEM. ON SEPTEMBER 24, 2005 AT 8:00 AM, MANUFACTURER SAID THEY WOULD CALL IN TWO DAYS. THIS WAS BEFORE THE ACCIDENT. AFTER THE ACCIDENT THEY SAID THEY WOULD COME AND LOOK AT THE VEHICLE. THE CALLER SAID SHE CALLED MANUFACTURER AGAIN ON SEPTEMBER 27, 2005 AT 9:00 AM TO TELL THEM OF THE ACCIDENT. THEY SAID SOMEONE WOULD CALL BACK. ON SEPTEMBER 28, 2005 MANUFACTURER SAID IT WOULD TAKE SIX TO EIGHT WEEKS TO LOOK AT THE VEHICLE. THE CALLER TOLD THEM THEY WERE GOING TO SUE, AND THE MANUFACTURER SAID THEY WILL NOT COME TO LOOK AT THE VEHICLE. *AK

Additional Summary:

Toyota ID No:
NHTSA ODI No: 10093384
Date of Incident: 20040930
Vehicle: 2004 TOYOTA HIGHLANDER
Location of Incident: MCKINNEY, TX
NHTSA Summary:
I PURCHASED A NEW 2004 TOYOTA HIGHLANDER ON 3/26/2004 AND AFTER ABOUT 2 MONTHS STARTED HAVING A PROBLEM WITH HESITATION WHEN ACCELERATING FROM A STOP OR WHEN PASSING. THE CAR FEELS LIKE IT GIES FOR 1 TO 2 SECONDS AND THEN LURCHES FORWARD. THIS IN VERY DANGEROUS WHEN MAKING A LEFT HAND TURN AT A LIGHT WITH ONCOMING CARS FROM THE OPPOSITE DIRECTION. THIS ALSO CAUSES PROBLEMS WHEN TRYING TO MERGE WITH HIGHWAY TRAFFIC OR WHEN PASSING. THIS OCCURRS EVERY DAY AND WHEN IT WAS REPORTED TO TOYOTA SERVICE THEY STATED IT WAS A KNOWN ISSUE WITH NO FIX OR TECHNICAL BULLETIN. *AK
Additional Summary:

Toyota ID No:
NHTSA ODI No: 10115675
Date of Incident: 20041001
Vehicle: 2003 LEXUS ES
Location of Incident: DULUTH, GA
NHTSA Summary:
I PURCHASED A 2003 LEXUS ES330 AND HAVE HAD CONSISTENT PROBLEMS WITH THE VEHICLE'S ACCELERATION AND DECELERATION. THE VEHICLE HESITATES DURING ACCELERATION AND SUDDENLY LURCHES FORWARD. ALSO, DURING DECELERATION THE VEHICLE SUDDENLY SLOWS DOWN UPON RELEASING THE GAS PEDAL. THIS HAS BECOME A SERIOUS ISSUE IN HEAVY TRAFFIC AND I+?+-+-+ /m/M CONCERNED IT MAY LEAD TO AN ACCIDENT. I HAVE REPORTED THE ISSUE TO THE DEALER ON TWO OCCASIONS BUT HAVE RECEIVED A STANDARD RESPONSE THAT THERE IS NOTHING WRONG WITH THE CAR. I+?+-+-?-/m/M SEEING THE DOT WILL INITIATE A RECALL AND HAVE THE MANUFACTURER FIX THE PROBLEM. I'M DEEPLY CONCERNED AND SHOCKED AT THE NUMBER OF SIMILAR REPORTS FILED WITH THE DOT. *NM
Additional Summary:

Toyota ID No:
NHTSA ODI No: 10093786
Date of Incident: 20041001
Vehicle: 2003 LEXUS ES300
Location of Incident: LAKE MARY, FL
NHTSA Summary:
I HAVE NOW SENT MY CAR IN FOR SERVICE TWICE TO LEXUS OF ORLANDO ABOUT UNEXPECTED SURGING OF THE VEHICLE AND VEHICLE HESITATION WHEN THE ACCELERATOR IS PRESSED. THIS IS AN INTERMITTENT AND DANGEROUS PROBLEM, AS I DO NOT KNOW WHEN IT WILL OCCUR. WHEN IT DOES OCCUR THE UPSHIFT IS HARSH, THE DOWNSHIFT SELAYED AS IF THE TRANSMISSION IS CONFUSED ABOUT THE DRIVER'S INTENTION, AND THERE IS PRONOUNCED HESITATION WHEN THE ACCELERATOR IS PRESSED. THIS LACK OF RESPONSIVENESS LEAVES BOTH THE VEHICLE AND PASSENGERS EXPOSED TO ACCIDENT AND INJURY. ON MY FIRST VISIT, I WAS TOLD THE VEHICLE COMPUTER WOULD BE RESET, AS THE VEHICLE LEARNS YOUR DRIVING STYLE IN THE

FIRST 30 OR 50 MILES, AND I MUST HAVE DRIVEN THE VEHICLE HARSHLY. THIS SO CALLED RESET DID NOTHING TO FIX THE PROBLEM, LESS THAN A WEEK LATER, I NARROWLY ESCAPED A CRASH AFTER MY CAR HESITATED WHILE CROSSING AN INTERSECTION. I PROMPTLY RETURNED THE VEHICLE TO THE DEALER FOR SERVICE. UPON COMPLETION OF THE SECOND SERVICE, WHICH INCLUDED A DRIVE WITH THE TECHNICIAN, LEXUS SERVICE NOW SAYS THESE PROBLEMS ARE INHERENT TO THE MODEL AND THEY CANT FIX THEM. IN ADDITION, I AM AWARE THAT NUMEROUS OWNERS FREQUENTLY COMPLAIN OF HESITATION AND SURGING IN 2002, 2003, AND 2004 MODELS AND MANY COMPLAINTS (OVER 100) OF THE SAME NATURE HAVE BEEN FILED WITH THE NHTSA. THIS STATEMENT IS TO ISSUE NOTICE THAT I AM NOT SATISFIED, AND THE PROBLEM HAS NOT BEEN FIXED.*AK
Additional Summary:

Toyota ID No:
NHTSA ODI No: 10096890
Date of Incident: 20041004
Vehicle: 2004 TOYOTA CAMRY
Location of Incident: JEANNETTE, PA
NHTSA Summary:
WHEN APPLYING THE ACCELERATOR PEDAL THE VEHICLE HESITATED THEN SURGED FORWARD. PLEASE PROVIDE ADDITIONAL INFORMATION. *JB
Additional Summary:

Toyota ID No:
NHTSA ODI No: 10097242
Date of Incident: 20041005
Vehicle: 2003 LEXUS ES300
Location of Incident: TALLMADGE, OH
NHTSA Summary:
THE CONSUMER STATED AT ANY TIME THE VEHICLE ACCELERATED WITHOUT WARNING. NO IMPACT REPORTED. PLEASE PROVIDE ADDITIONAL INFORMATION. *JB
Additional Summary:

Toyota ID No:
NHTSA ODI No: 10108812
Date of Incident: 20041006
Vehicle: 2002 TOYOTA CAMRY
Location of Incident: HOUSTON, TX
NHTSA Summary:
VEHICLE SUDDENLY EXPERIENCED A SURGE IN ACCELERATION. CAR CRASHED INTO A TREE AT THE FRONT PARKING SPACE. *JM -ON TWO SEPARATE OCCASIONS THE CONSUMER WAS ENTERING A PARKING SPACE AND THE VEHICLE SUDDENLY ACCELERATED AND CRASHED INTO A TREE AT THE FRONT OF THE SPACE. THE SECOND INCIDENT OCCURED AFTER THE -/A
HREF="HTTP://WWW.SERVERELIGICS.COM/LMRTLS ASP?M=6&K=FUEL%20TANK" OSMOUSEOVER="WINDOW.STATUS=#FUEL TANK; RETURN TRUE;" OSMOUSEOUT="WINDOW.STATUS=/; RETURN TRUE;">FUEL TANK</A> WAS FILLED. THE ENGINE ACCELERATED TO HIGH RPMS WHILE THE CONSUMERS FOOT WAS ON THE BRAKE. *TC
Additional Summary:

Toyota ID No:
NHTSA ODI No: 10103145
Date of Incident: 20041014
Vehicle: 2002 TOYOTA ECHO
Location of Incident: OCEAN VIEW, DE
NHTSA Summary:
VEHICLE WOULD INTERMITTENTLY JUMP OUT OF DRIVE INTO NEUTRAL WHEN APPLYING THE ACCELERATOR PEDAL FROM A STOPPING LOW MOTION OR FROM INCREASING THE SPEED TO HIGH LEVELS. VEHICLE HAD BEEN TO THE DEALER ON THREE OCCASIONS, AND THEY WERE UNABLE TO DUPLICATE THE PROBLEM.*AK
Additional Summary:

Toyota ID No:
NHTSA ODI No: 10100922
Date of Incident: 20041014
Vehicle: 2004 LEXUS ES330
Location of Incident: HOUSTON, TX
NHTSA Summary:
SE ELECTRONIC GAS PEDAL - WHEN AT LOW SPEED OR IMMEDIATELY AFTER COMING TO A STOP THE GAS PEDAL IS DEPRESSED THE CAR HESITATES FOR 1.5 SECONDS OR MORE BEFORE RESPONDING AND THEN ACCELERATES VERY FAST. THIS PRESENTS A SERIOUS SAFETY HAZZARD WHEN TRING TO ENTER OR CROSS BUSY HIGHWAYS. THE DEALER SAYS ALL THE 2004 ? 2005 MODELS DO IT. IT IS A CONSTANT COMPLAINT. LEXUS CUSTOMER SERVICE SAYS THEY ARE AWARE OF IT BUT HAVE NO CURE. A SAFETY WARNING AND RECALL SHOPULD BE ISSUED.*AK
Additional Summary:

Toyota ID No:
NHTSA ODI No: 10096086
Date of Incident: 20041018
Vehicle: 2004 TOYOTA HIGHLANDER
Location of Incident: JONESBOROUGH, TN
NHTSA Summary:
MY 2004 TOYOTA HIGHLANDER EXHIBITS A SIGNIFICANT HESITATION AT THE START OF RAPID ACCELERATION THAT I BELIEVE IS A POTENTIAL SAFETY HAZARD. WHEN THE VEHICLE IS MOVING AT A SLOW SPEED AND THE ACCELERATOR IS DEPRESSED TO BEGIN A RAPID ACCELERATION (PARKING A SLOWER VEHICLE OR MERGING INTO TRAFFIC), A SIGNIFICANT HESITATION IS PRESENT BEFORE THE VEHICLE BEGINS TO ACCELERATE. THIS DELAYED RESPONSE TO THE ACCELERATOR INPUT CAN PLACE THE VEHICLE IN DANGEROUS SITUATIONS WHERE THE VEHICLE CANNOT GET OUT OF THE WAY OF OTHER TRAFFIC. I BELIEVE THIS BEHAVIOR COULD RESULT IN A TRAFFIC ACCIDENT AND POTENTIAL INJURY TO PEOPLE. *AK
Additional Summary:

Toyota ID No:
NHTSA ODI No: 10096393
Date of Incident: 20041024
Vehicle: 2003 SCION AC/3DN
Location of Incident: BURSON', CA
NHTSA Summary:
TOOK FOOT OFF GAS TO SLOW DOWN WHEN APPROACHING CURVE. BAKED TO SLOW DOWN WHEN ENTERING CURVE AND VEHICLE FAILED TO SLOW...FULLY ENGAGED

BRAKE AND VEHICLE FAILED TO STOP AND KEPT ACCELERATING. THIS RESULTED IN THE VEHICLE CRASHING INTO AN EMBANKMENT WHICH CAUSED MAJOR DAMAGE TO THE VEHICLE. THIS IS IS BRAND NEW SCION TC PURCHASED 09/04/04. *AK
Additional Summary:

Toyota ID No:
NHTSA ODI No: 10097588
Date of Incident: 20041026
Vehicle: 2002 TOYOTA CAMRY
Location of Incident: CINCINNATI, OH
NHTSA Summary:
CONSUMER STATED WHILE PULLING INTO A PARKING SPACE SHE SUDDENLY FOUND HERSELF AND CHILD IN THE STORE. SHE PULLED INTO A PARKING SPACE, APPLIED BRAKES, AND THEN SUDDENLY THE VEHICLE ACCELERATED AND CRASHED INTO THE STORE FRONT. CONSUMER WAS SURE THAT SHE DID NOT PUT FOOT ON THE ACCELERATOR INSTEAD OF THE BRAKE PEDAL. CONSUMER WENT ON LINE AND FOUND THAT DOT WAS INVESTIGATING THE SAME TYPE OF PROBLEM.*AK
Additional Summary:

Toyota ID No:
NHTSA ODI No: 10101616
Date of Incident: 20041101
Vehicle: 2002 TOYOTA CAMRY
Location of Incident: CLARENDON HILLS, IL
NHTSA Summary:
OWER OF 2003 TOYOTA CAMRY EXPERIENCED SUDDEN ACCELERATION SUGGESTNHTSA INITIATE INVESTIGATION. *BF THE VEHICLE SUDDENLY SURGED FORWARD AND HAD RUN INTO A CONCRETE WALL AND OCCURRED ON TWO MORE OCCASIONS. *SC SEE OIM 10061695 *DSY DUPLICATE OF 10101790. *DSY
Additional Summary:

Toyota ID No:
NHTSA ODI No: 10151872
Date of Incident: 20041101
Vehicle: 2004 TOYOTA CAMRY
Location of Incident: PERTH AMBOY, NJ
NHTSA Summary:
CONSUMER PRESSED GAS PEDAL AND VEHICLE DID NOT ACCELERATE, THREE SECONDS LATER VEHICLE LUNGED FORWARD. *TX THE VEHICLE WAS TAKEN TO THE DEALER. THE DEALER WAS ABLE TO DUPLICATE THE PROBLEM BUT WAS UNABLE TO DETERMINE THE CAUSE. ABOUT 17 MONTHS LATER THE VEHICLES WAS REPAIRED. *NM UPDATED *JS
Additional Summary:

Toyota ID No:
NHTSA ODI No: 10103230
Date of Incident: 20041101
Vehicle: 2001 LEXUS RX300
Location of Incident: GLENCOE, IL
NHTSA Summary:

LEXUS 300 HESITATION. STEPPED ON ACCELERATOR, CAR HESITATED AND HAD TO PUMP ACCELERATOR TO GO FORWARD. *BF THIS PROBLEM OCCURRED MANY TIMES. THE CONSUMER ALMOST HAD AN ACCIDENT WHILE ATTEMPTING TO MAKE A LEFT TURN. THE CONSUMER APPLIED THE ACCELERATOR PEDAL. THE VEHICLE HESITATED AND THE CONSUMER PUMPED THE ACCELERATOR TO GO FORWARD. THE DEALER COULD NOT FIND A PROBLEM. *SC
Additional Summary:

Toyota ID No:
NHTSA ODI No: 10105572
Date of Incident: 20041102
Vehicle: 2003 TOYOTA CAMRY
Location of Incident: PALM CITY, FL
NHTSA Summary:
THE VEHICLE INCREASES IN RPM'S WITHOUT TOUCHING THE ACCELERATOR PEDAL. WHEN APPROACHING A TRAFFIC LIGHT THE RPM'S WILL INCREASE FROM 750 TO 900 RPM'S. THE CONSUMER TOOK THE VEHICLE BACK TO THE DEALER. ALSO CONTACTED THE MANUFACTURER. IT WAS EXPLAINED TO THE CONSUMER THAT THIS WAS THE CURRENT DESIGN OF THE VEHICLE. *AK THERE WAS POTENTIAL FOR AN ACCIDENT TO OCCUR IN STOP AND GO TRAFFIC. THE CONSUMER WAS AWARE OF TWO OTHER OWNERS OF THIS SAME MAKE AND MODEL WHO HAVE EXPERIENCED THE SAME PROBLEM. *SC
Additional Summary:

Toyota ID No:
NHTSA ODI No: 10101751
Date of Incident: 20041117
Vehicle: 2000 LEXUS LS400
Location of Incident: BERKELEY, CA
NHTSA Summary:
AFTER STARTING THE VEHICLE, IT SUDDENLY ACCELERATED AT A HIGH SPEED. THE CONDITION CAUSED THE VEHICLE TO HIT THREE PARKED VEHICLES AND ONE VEHICLE IN MOTION. THE CONSUMER RECEIVED MINOR INJURIES TO HER FACE DUE TO AIR BAG DEPLOYMENT. THE OTHER DRIVER AND PASSENGER OF THE OTHER VEHICLES APPEARED TO BE IN NO INJURY. *JB
Additional Summary:

Toyota ID No:
NHTSA ODI No: 10102879
Date of Incident: 20041119
Vehicle: 2002 TOYOTA CAMRY
Location of Incident: LIVINGSTON, NJ
NHTSA Summary:
CONSUMER WAS DRIVING ABOUT 45 MPH AND THE ACCELERATOR PEDAL BECAME STUCK. DRIVER HAD TO TURN OFF THE IGNITION IN ORDER TO GET THE VEHICLE TO STOP. *AK
Additional Summary:

Toyota ID No:
NHTSA ODI No: 10101640
Date of Incident: 20041119
Vehicle: 2002 TOYOTA CAMRY

Location of Incident: LOUISVILLE, KY
NHTSA Summary:
THE CONSUMER EXPERIENCED SUDDEN ACCELERATION. THE BRAKES FAILED TO WORK CAUSING AN ACCIDENT. *NM THE CONSUMER'S VEHICLE COLLIDED WITH ANOTHER VEHICLE AT A STOP SIGN. *SC THE AIR BAGS DID NOT DEPLOY. *JB
Additional Summary:

Toyota ID No:
NHTSA ODI No: 10105582
Date of Incident: 20041119
Vehicle: 2004 TOYOTA CAMRY
Location of Incident: NEW LONDON, CT
NHTSA Summary:
WHILE MAKING A LEFT TURN INTO A PARKING SPACE, THE VEHICLE ACCELERATED WITHOUT WARNING, AS A RESULT THE VEHICLE COLLIDED INTO A PARKED VEHICLE. THE CAUSE HAS YET TO BE DETERMINED. PLEASE PROVIDE ADDITIONAL INFORMATION. *JB,, WHILE EXITING A HIGHWAY AT 60 MPH, REMOVED FOOT FROM ACCELERATOR TO COAST INTO EXIT, VEHICLE SUDDENLY ACCELERATED TO 75 MPH. WAS ABLE TO CONTROL VEHICLE BY APPLYING BRAKES. ALSO, DEALER REPAIRED FRONT BUMPER. *AK
Additional Summary:

Toyota ID No:
NHTSA ODI No: 10100310
Date of Incident: 20041121
Vehicle: 2003 TOYOTA CAMRY
Location of Incident: APALACHIN, NY
NHTSA Summary:
WHILE BACKING OUT OF A DRIVEWAY AND SHIFTING FROM REVERSE INTO DRIVE VEHICLE SUDDENLY ACCELERATED OUT-OF-CONTROL INTO A NEARBY NEIGHBOR'S YARD. IMMEDIATELY AND CONTINUAL APPLICATION OF BRAKES DID NOTHING -- ENGINE CONTINUED TO REV AND I NARROWLY AVOIDED STRIKING A HOUSE. INSTEAD, I WAS FORCED TO STRIKE A ROW OF TREES TO STOP RUN-AWAY VEHICLE. FRONTAL AIR BAGS FAILED TO DEPLOY ON EITHER SIDES. HAD IT NOT BEEN FOR THE TREES, I WOULD'VE STRUCK A 500 GALLON PROPANE TANK, 2 PARKED PICKUP TRUCKS, AND THE ORIGINAL HOUSE FROM WHICH WAS DEPARTING FROM. MY LONE PASSENGER AND I WILL BE EMOTIONALLY SCARRED FOREVER BY THIS INCIDENT. PLEASE FORCE TOYOTA TO ISSUE A RECALL HERE: PLEASE DON'T WAIT FOR A DEATH.. PLEASE!!!*AK
Additional Summary:

Toyota ID No:
NHTSA ODI No: 10100445
Date of Incident: 20041122
Vehicle: 2005 LEXUS ES330
Location of Incident: MCLEAN, VA
NHTSA Summary:
I PURCHASED A NEW LEXUS ES330, AND IT HAS 3 PROBLEMS: (1) BUMPY RIDE AT LOW AND HIGH SPEEDS, (2) ACCELERATION LAG AFTER COASTING, (3) HIGH IDLE WHEN COLD (15,000RPMS). *AK
Additional Summary:

Toyota ID No:
NHTSA ODI No: 10110398
Date of Incident: 20041129
Vehicle: 2003 TOYOTA CAMRY SOLARA
Location of Incident: INDIANAPOLIS, IN
NHTSA Summary:
WHEN MAKING TURNS (AND SOMETIMES JUST WHEN ACCELERATING), THIS CAR AND ALL LEXUS IT HESITATE WHEN THE THROTTLE IS DEPRESSED AND THEN LUNGES FORWARD SUDDENLY NEARLY CAUSING THE DRIVER TO LOSE CONTROL.*JB
Additional Summary:

Toyota ID No:
NHTSA ODI No: 10112818
Date of Incident: 20041201
Vehicle: 2000 TOYOTA CAMRY
Location of Incident: FAYETTEVILLE, GA
NHTSA Summary:
CONSUMER'S VEHICLE EXPERIENCED THE VERY SAME PROBLEM AS MENTIONED IN RECALL 04V032000 CONCERNING SPEED CONTROL CABLE/ACCELERATOR STICKING. *AK
Additional Summary:

Toyota ID No:
NHTSA ODI No: 10112822
Date of Incident: 20041201
Vehicle: 2002 TOYOTA CAMRY
Location of Incident: RED BANK, NJ
NHTSA Summary:
WHEN BRAKING INTERMITTENTLY THE VEHICLE ACCELERATED. THIS CONDITION HAS OCCURRED 8 TIMES WITHIN TWO MONTHS. VEHICLE HAD BEEN TO THE DEALER ON SEVERAL OCCASIONS. DEALER WAS UNABLE TO LOCATE THE CAUSE OR DUPLICATE THE PROBLEM. *AK THIS PROBLEM HAD OCCURRED WHILE THE VEHICLE WAS IN REVERSE. *BF
Additional Summary:

Toyota ID No:
NHTSA ODI No: 10112287
Date of Incident: 20041202
Vehicle: 2001 LEXUS ES330
Location of Incident: CAPE CORAL, FL
NHTSA Summary:
WHEN SLOWING TO A NEAR STOP (LESS THAN 10 MPH) AND THEN ACCELERATING, THE VEHICLE LAGS AND THEN LURCHES TO OVERCOMPENSATE. IT DOES THIS VIRTUALLY EVERYTIME, MAKING IT UNSAFE IN HEAVY TRAFFIC. *DSY
Additional Summary:

Toyota ID No:
NHTSA ODI No: 10107560
Date of Incident: 20041203
Vehicle: 2002 LEXUS GS300
Location of Incident: SEDNA, AZ
NHTSA Summary:

VEHICLE EXPERIENCED HESITATION WHILE DRIVING TO THE INTERSECTION, AND VEHICLE WILL NOT GO FORWARD WITH ANY POWER. CONSUMER PRESSED THE ACCELERATOR, BUT THE VEHICLE WILL NOT MOVE WITH ANY FORCE. CONSUMER TOOK THE VEHICLE TO THE DEALER, BUT RECEIVED NO ASSISTANCE. *AK
Additional Summary:

Toyota ID No:
NHTSA ODI No: 10102319
Date of Incident: 20041204
Vehicle: 2004 TOYOTA CAMRY
Location of Incident: AUSTIN, TX
NHTSA Summary:
I WAS STOPPED IN TRAFFIC ON IH-35 IN AUSTIN DUE TO AN ACCIDENT AHEAD. I HAD AN OPPORTUNITY TO MOVE TO AN EXIT LANE AND AFTER MOVING TO THAT LANE, NOTICED A VEHICLE COMING TOWARD ME AT HIGH SPEED. MY WAY WAS CLEAR TO ACCELERATE AND I DID SO, PRESSING THE ACCELERATOR ABOUT 1/2 THE WAY DOWN. NOTHING HAPPENED AND I PRESSED THE ACCELERATOR THE REMAINDER TO THE FLOOR. AFTER A SHORT TIME, THE ENGINE FINALLY ACCELERATED. THREE DAYS LATER, ON DEC. 7, I TOOK THE CAR TO THE DEALER AND EXPLAINED WHAT HAD HAPPENED. AFTER EXAMINING THE CAR, THE DEALER CALLED TO EXPLAIN THAT THEY HAD CHECKED THE CAR OVER AND EVERYTHING WAS FINE. HE FURTHER EXPLAINED THAT THE 2004 CAMRY WAS EQUIPPED WITH A "DRIVE-BY-WIRE" ACCELERATOR. NO ONE WAS INJURED, NO DAMAGE WAS DONE, BUT I AM CONCERNED THAT THIS CAR WILL NOT RESPOND QUICKLY IN A DANGEROUS SITUATION. NOR DO I BELIEVE THAT THIS IS AN ISOLATED SITUATION. WE HAD DRIVEN A DEMONSTRATOR, A 4 CYLINDER CAMRY, ABOUT SIX MONTHS BEFORE WE PURCHASED OURS. MY WIFE WAS DRIVING AND PRESSED HARD ON THE ACCELERATOR TO GET IT TO MOVE UP AN ENTRANCE RAMP AND IT ALSO DID NOT RESPOND. AT THAT TIME, I DIDN'T PLACE ANY SIGNIFICANCE TO THE CAR NOT RESPONDING, THINKING MY WIFE WASN'T ATTEMPTING TO ACCELERATE QUICKLY AS SHE INSISTED. *AK
Additional Summary:

Toyota ID No:
NHTSA ODI No: 10105486
Date of Incident: 20041207
Vehicle: 2002 TOYOTA CAMRY
Location of Incident: FAIRVIEW PARK, OH
NHTSA Summary:
WHILE PULLING INTO A PARKING SPACE THE CONSUMER HEARD A LOUD NOISE COMING FROM HER VEHICLE. THE VEHICLE ACCELERATED AND THE CONSUMER CRASHED INTO A BRICK WALL. NO INJURIES WAS REPORTED. THE VEHICLE WAS TAKEN TO THE DEALER AND THE PROBLEM IS STILL UNDETERMINED. *JB
Additional Summary:

Toyota ID No:
NHTSA ODI No: 10107685
Date of Incident: 20041209
Vehicle: 2002 TOYOTA CAMRY
Location of Incident: FLORENCE, KY
NHTSA Summary:

THE THROTTLE STUCK WIDE OPEN ON THE CAR WHEN PUT IN REVERSE, FROM A PARKED POSITION. THIS CAUSED THE CAR TO GO COMPLETELY OUT OF CONTROL STRIKING SEVERAL OBJECTS COMING TO REST IN THE MIDDLE OF A ROAD. *SM
Additional Summary:

Toyota ID No:
NHTSA ODI No: 10103937
Date of Incident: 20041210
Vehicle: 2001 LEXUS RX300
Location of Incident: SILVER SPRING, MD
NHTSA Summary:
VEHICLE WAS EXPERIENCING A SUDDEN ACCELERATION PROBLEM. CONSUMER WAS PARKING THE VEHICLE WHEN THE ACCELERATION BEGAN. VEHICLE HIT A BRICK PILLAR. *AK
Additional Summary:

Toyota ID No:
NHTSA ODI No: 10103278
Date of Incident: 20041212
Vehicle: 2005 TOYOTA HIGHLANDER
Location of Incident: BALTIMORE, MD
NHTSA Summary:
WHILE APPLYING THE ACCELERATOR PEDAL VEHICLE HESITATED TO ACCELERATE. DRIVER APPLIED THE ACCELERATOR PEDAL NUMEROUS TIMES AND THE VEHICLE ACCELERATED UNCONTROLLABLY. DRIVER WAS ABLE TO MAINTAIN CONTROL OF THE VEHICLE, AND DROVE IT TO THE DEALER FOR INSPECTION. MECHANIC DETERMINED THAT IT WAS NORMAL FOR THE VEHICLE TO HESITATE WHEN APPLYING THE ACCELERATOR PEDAL. *AK *BP *SM
Additional Summary:

Toyota ID No:
NHTSA ODI No: 10111310
Date of Incident: 20041213
Vehicle: 2001 TOYOTA CAMRY
Location of Incident: NORTH OLMSTED, OH
NHTSA Summary:
WHILE DRIVING THE THROTTLE STUCK, THIS CAUSED THE CONSUMER TO REAR END ANOTHER VEHICLE ONE TIME. VEHICLE WAS TOWED. DEALERSHIP WAS NOTIFIED, BUT DID NOT RESOLVE THE PROBLEM. *AK
Additional Summary:

Toyota ID No:
NHTSA ODI No: 10105974
Date of Incident: 20041214
Vehicle: 2004 LEXUS ES330
Location of Incident: MT. PLEASANT, SC
NHTSA Summary:
ON NUMEROUS OCCASSIONS THIS CAR HAD ACCELERATED UNEXPECTEDLY WHEN PUTTING IT IN GEAR BOTH FORWARD AND REVERSE. THE LAST OCCURENCE THE CAR SHOT FORWARD, JUMPING A LOW CURB AND HITTING A TREE.*AK I HAD NO CONTROL OVER WHAT HAPPENED AND I AM AFRAID TO DRIVE THIS CAR ANY MORE.

Additional Summary:

Toyota ID No:
NHTSA ODI No: 10113425
Date of Incident: 20041215
Vehicle: 2005 TOYOTA CAMRY
Location of Incident: JACKSON, NJ
NHTSA Summary:
VEHICLE HESITATED WHEN LAUNCHED FORWARD BEFORE ACCELERATING. VEHICLE WAS SERVICED BY THE DEALERSHIP 3 TIMES. DEALERSHIP INDICATED TECHNICALLY THE VEHICLE WAS PERFORMING AS IT SHOULD, BUT THERE WAS A PROBLEM WITH THE NEW DRIVE BY WIRE TECHNOLOGY FOR WHICH MANUFACTURER HAD TO PROVIDE A REMEDY.*AK
Additional Summary:

Toyota ID No:
NHTSA ODI No: 10104116
Date of Incident: 20041220
Vehicle: 2004 LEXUS RX330
Location of Incident: PEWAUKEE, WI
NHTSA Summary:
I HAVE HAD TWO PROBLEMS. ONE BEING YESTERDAY I CAME OUT TO MY CAR IN THE PARKING LOT STARTED UP MY CAR AND THERE WERE NO BRAKES. HAD TO PUT CAR IN PARK TO STOP CAR. THE BRAKES WERE ROCK HARD. THEY SAID IT WAS THE BOOSTER THAT HAD TO BE REPAIRED. THE SECOND PROBLEM IS I HAD ALMOST 2 ACCIDENTS WHEN TRYING TO ACCELERATE FROM A STOP SIGN. I HIT THE GAS AND THE CAR IGNIENT ON IT LAGS AND THEN GOES. THIS HESITATION IS VERY VERY SERIOUS AND HAS ME VERY WORRIED ABOUT DRIVING WITH KIDS. I BOUGHT THIS CAR FOR THE SAFETY FEATURES AND NOW I'M SCARED TO DRIVE IT. WHAT IF MY BRAKES FAILED ON THE HIGHWAY I WAS ON? WHAT IF MY CAR LAGS IN FRONT OF A TRUCK?*AK
Additional Summary:

Toyota ID No:
NHTSA ODI No: 10105571
Date of Incident: 20041227
Vehicle: 2004 TOYOTA AVALON
Location of Incident: FOREST HILL, MD
NHTSA Summary:
WHILE DRIVING IN STOP AND GO TRAFFIC THE VEHICLE'S ENGINE REVVED UP AND THE VEHICLE ACCELERATED FORWARD INTO ANOTHER VEHICLE. *SM THE RPM REACHED 7000. THE CONSUMER STATED THAT THIS MAKES THE FOURTH TIME THE VEHICLE HAD HAD THIS ISSUE. THE CONSUMER REFERENCED 10099319. HEAVY SMOKE CAME FROM THE FRONT OF THE VEHICLE AFTER THE CRASH. THE CONSUMER HAD TO TURN THE KEY TO THE OFF POSITION TO STOP THE ENGINE FROM RACING. *TC *JB
Additional Summary:

Toyota ID No:
NHTSA ODI No: 10105632
Date of Incident: 20041230
Vehicle: 2001 TOYOTA CAMRY
Location of Incident: LAKEWOOD, NJ

NHTSA Summary:
PULLING INTO A PARKING SPACE THE CAR SUDDENLY ACCELERATED AND DID NOT STOP UNTIL IT CRASHED INTO TWO POLICMEN. THERE IS NO QUESTION THAT THE CAR WAS ALREADY SLOWING DOWN BECAUSE THE CAR WAS PULLING INTO A PARKING SLOT.*AK
Additional Summary:

Toyota ID No:
NHTSA ODI No: 10104793
Date of Incident: 20041230
Vehicle: 2003 TOYOTA CAMRY
Location of Incident: ORLANDO, FL
NHTSA Summary:
WENT TO DRIVE 2003 TOYOTA CAMRY XLE OUT OF THE GARAGE, STARTED THE CAR TRIED TO PUT IN REVERSE AND GEAR SHIFT WOULD NOT MOVE OUT OF PARK. THE MOTOR STARTED RACING DURING THIS TIME. TURNED OFF CAR GOT OUT OF CAR TO WAIT TILL LATER TO RUN ERRAND AND DECIDED TO TRY ONE MORE TIME. START CAR AGAIN TRIED TO PUT IN REVERSE. IT SUCEEDED THIS TIME BUT THE CAR ACCELERATED OUT OF THE GARAGE RAPIDLY W/ OUT MY ASSISTANCE. DAMAGING SEVERAL ITEMS ON ITS WAY OUT OF THE GARAGE.*AK
Additional Summary:

Toyota ID No:
NHTSA ODI No: 10103721
Date of Incident: 20041230
Vehicle: 2004 TOYOTA CAMRY
Location of Incident: SILVER SPRING, MD
NHTSA Summary:
WHILE PARKING HIS 2004 TOYOTA CAMRY THE VEHICLE ACCELERATED SUDDENLY AND HIT A PARKED CAR. *SM WHEN TURNING SHARPLY TO THE RIGHT THE VEHICLE FELT AS IF IT WERE GOING TO SLIP. SHIFTING GEARS WERE NOT SMOOTH. THE BRAKE PEDAL FELT SOFT AND WOULD GO TO THE FLOOR AND THERE WAS AN ERRATIC EFFECT WHEN CHANGING THE RADIO STATIONS. *SC *JB
Additional Summary:

Toyota ID No:
NHTSA ODI No: 10147059
Date of Incident: 20050104
Vehicle: 2005 SCION XB
Location of Incident: EL PASO, TX
NHTSA Summary:
ON, 4 JAN 2006, MY DAUGHTER WAS DRIVING A TOYOTA SCION XB, 2005. SHE ATTEMPTED TO STOP BEHIND A VEHICLE THAT HAS STOPPED AT A YIELD SIGN. SHE COULD NOT STOP BECAUSE THE THROTTLE HAD STUCK. SHE RAN INTO ANOTHER VEHICLE, DAMAGING HER FRONT END. *SM
Additional Summary:

Toyota ID No:
NHTSA ODI No: 10109283
Date of Incident: 20050105
Vehicle: 2003 TOYOTA CAMRY
Location of Incident: BRONX, NY

NHTSA Summary:
WHILE DRIVING AT 35 MPH VEHICLE ACCELERATED WITHOUT WARNING. WHEN APPLYING THE BRAKES VEHICLE ACCELERATED EVEN MORE. AS A RESULT, THE VEHICLE COLLIDED INTO TWO PARKED CARS AND A BRICK WALL. DRIVER SUSTAINED HEAD INJURIES. *AK. THE CONSUMER RECEIVED A CHECK 18,634.18 IN FULL PAYMENT FOR AUTO LOSS. WHEN THE CONSUMER PRESSED THE GAS PEDAL THE RPMS WERE HIGH. ONE AIRBAG DEPLOYED. *TC
Additional Summary:

Toyota ID No:
NHTSA ODI No: 10107942
Date of Incident: 20050110
Vehicle: 2001 TOYOTA CAMRY
Location of Incident: NEW BERLIN, WI
NHTSA Summary:
WHEN DISENGAGING THE VEHICLE FROM PARK THE VEHICLE ACCELERATES WITHOUT WARNING. NO IMPACT REPORTED. THE CAUSE HAS YET TO BE DETERMINED. PLEASE PROVIDE ADDITIONAL INFORMATION. *DB
Additional Summary:

Toyota ID No:
NHTSA ODI No: 10106511
Date of Incident: 20050117
Vehicle: 2002 TOYOTA CAMRY
Location of Incident: LITTLE ELM, TX
NHTSA Summary:
WHILE PULLING INTO A PET STORE PARKING LOT, THE VEHICLE SUDDENLY ACCELERATED UNCONTROLLABLY CAUSING ME TO CRASH INTO A RETAINING WALL IN FRONT OF THE STORE. THERE WERE PREVIOUS INCIDENTS INVOLVING THE ACCELERATION OF THE VEHICLE IN THE HOUR IMMEDIATELY BEFORE THE CRASH OCCURRED. *JB
Additional Summary:

Toyota ID No:
NHTSA ODI No: 10108216
Date of Incident: 20050117
Vehicle: 2004 LEXUS ES330
Location of Incident: LARGO, FL
NHTSA Summary:
WHEN ATTEMPTING TO ACCELERATE THE VEHICLE HESITATED, THEN SURGED FORWARD WITHOUT WARNING. NO IMPACT REPORTED. PLEASE PROVIDE ADDITIONAL INFORMATION. *JB. VEHICLE SURGES EVEN WHEN VEHICLE IS AT A COMPLETE STOP. NO COLLISION SO FAR. *TV
Additional Summary:

Toyota ID No:
NHTSA ODI No: 10108990
Date of Incident: 20050125
Vehicle: 2005 TOYOTA CAMRY
Location of Incident: SMYRNA, GA
NHTSA Summary:

WHILE THE DRIVER'S FOOT WAS ON THE BRAKE PEDAL VEHICLE SUDDENLY ACCELERATED UNCONTROLLABLY APPLIED THE BRAKE PEDAL NUMEROUS TIMES AND THE VEHICLE CONTINUED TO ACCELERATE. DRIVER WAS ABLE TO MAINTAIN CONTROL OF THE VEHICLE AND PULLED OVER. THE VEHICLE WAS TAKEN TO THE DEALER FOR INSPECTION. THE CAUSE HAS NOT BEEN DETERMINED. *AK
Additional Summary:

Toyota ID No:
NHTSA ODI No: 10109917
Date of Incident: 20050128
Vehicle: 2000 TOYOTA CAMRY
Location of Incident: DAYTON, TN
NHTSA Summary:
CONSUMER COMPLAINED ABOUT A SUDDEN ACCELERATION PROBLEM. WHILE DRIVING AT APPROXIMATELY 10 MPH AND APPROACHING A TRAFFIC LIGHT THE ACCELERATOR PEDAL STUCK, CAUSING THE VEHICLE TO ACCELERATE WITHOUT WARNING, AND HITTING A GUARD RAIL. UPON IMPACT, AIR BAGS FAILED TO DEPLOY. THE VEHICLE WAS TOTALED. *AK
Additional Summary:

Toyota ID No:
NHTSA ODI No: 10128785
Date of Incident: 20050201
Vehicle: 2005 LEXUS ES
Location of Incident: ATLANTA, GA
NHTSA Summary:
DT, THE CONTACT OWNS A 2005 LEXUS ES350. THE CONTACT STATED THAT UPON ACCELERATION AFTER SLOWING DOWN THE VEHICLE WILL SURGE FORWARD. THE DEALERSHIP REPLACED A TRANSMISSION CHIP THAT WAS RECOGNIZED IN A TECHNICAL SERVICE BULLETIN. THE PROBLEM DIMINISHED FOR A WHILE, BUT THE CORRECTION DID NOT REMEDY THE PROBLEM. THE CONTACT STATED THAT THIS DID NOT HAPPEN EVERY TIME WHILE DRIVING THE VEHICLE, BUT ENOUGH TIMES TO CAUSE THE CONTACT TO BE CONCERNED ABOUT THE VEHICLE. THE MANUFACTURER STATED THAT THEY WERE DECLINING TO OFFER ADDITIONAL ASSISTANCE BECAUSE THE VEHICLE WAS PERFORMING UNDER NORMAL OPERATING CHARACTERISTICS FOR A VEHICLE WITH ECTL. *AK
Additional Summary:

Toyota ID No:
NHTSA ODI No: 10111771
Date of Incident: 20050202
Vehicle: 2000 TOYOTA SIENNA
Location of Incident: EDISON, NJ
NHTSA Summary:
WHILE TRAVELING 50 MPH SUDDENLY THE VEHICLE ACCELERATED TO 80 MPH, RESULTING IN A CRASH AND A ROLL OVER. THE CONSUMER WAS NOT INJURED IN THE COLLISION. *AK. *SC *JB
Additional Summary:

Toyota ID No:
NHTSA ODI No: 10117285

Date of Incident: 20050207
Vehicle: 2004 LEXUS RX330
Location of Incident: ROSTON, MA
NHTSA Summary:
THE ACCELERATOR STUCK, AND CONSUMER WAS NOT ABLE TO STOP THE VEHICLE. CONSUMER LEFT THE VEHICLE, AND CONTACTED THE MANUFACTURER. THEY HAD THE VEHICLE TOWED, SUPPOSEDLY REPAIRED, BUT CONSUMER WAS NOT SATISFIED *AK. BECAUSE CONSUMER HAVE NO BRAKES BRAKES HE HAD TO USE THE EMERGENCY BRAKE WHICH SLOWED THE CAR DOWN ENOUGH TO PUTIT IN PARK WHILE MOVING. THEN HE SHUT OFF THE IGNITION. THIS VEHICLE CAME WITH NO CLIPS ON THE KICK PANEL. *BF
Additional Summary:

Toyota ID No:
NHTSA ODI No: 10114155
Date of Incident: 20050212
Vehicle: 2004 TOYOTA CAMRY
Location of Incident: DARNESTOWN, MD
NHTSA Summary:
WHILE MY WIFE AND I WERE AT A COMPLETE STOP IN A LINE OF TRAFFIC, OUR ELEVEN MONTH-OLD CAMRY LE SUDDENLY ACCELERATED UNEXPECTEDLY AND WITHOUT WARNING WHILE MY FOOT WAS SQUARELY AND FIRMLY ON THE BRAKE PEDAL. WITHIN A FEW SECONDS, AS THE CAR VIOLENTLY LURCHED FORWARD, AND I INSTINCTIVELY PRESSED HARDER ON THE BRAKE TO KEEP FROM PLOWING INTO THE LINE OF VEHICLES IN FRONT OF ME, I'D WE HEARD THE ENGINE ACCELERATING, AND, I'D LOOKED THE TACHOMETER AND OBSERVED IT STEADILY INCREASING FROM A NORMAL IDLE SPEED TO ALMOST THE MAXIMUM. I MAINTAINED CONTROL OF THE VEHICLE AND PREVENTED THE ENGINE SPEED FROM CONTINUING TO ITS PEAK BY QUICKLY SHIFTING THE CAR INTO PARK AND TURNING IT OFF. AFTER APPROXIMATELY 20-30 SECONDS I RESTARTED THE CAR, AND THE IDLE WAS ONCE AGAIN NORMAL. I DROVE THE CAR TO THE NEAREST DEALERSHIP, APPROXIMATELY 3 BLOCKS AWAY. THE CAR HAS NOW BEEN IN THE POSSESSION OF THE TOYOTA DEALER FOR OVER TWO MONTHS, AND THEIR MECHANICS HAVE BEEN UNABLE TO REPLICATE THE EVENT OR FIND ANY RECORD OF THE INCIDENT IN THE ON-BOARD COMPUTER. *AK
Additional Summary:

Toyota ID No:
NHTSA ODI No: 10120992
Date of Incident: 20050215
Vehicle: 2004 TOYOTA HIGHLANDER
Location of Incident: HARRISBURG, PA
NHTSA Summary:
DT, 2004 TOYOTA HIGHLANDER WITH HESITATION PROBLEM. FOR EXAMPLE WHEN ENTERING INTERSTATE AND NEED TO ACCELERATE, IT HESITATES THEN QUICKLY JOLTS TAKEN TO DEALER WHO SAID THERE IS NOTHING THEY CAN DO. EXPLAINED VEHICLE HAS AN ELECTRIC THROTTLE CONTROL AND IS NOT CONTROLLED BY A THROTTLE CABLE AS PART OF FEDERAL EMISSIONS REGULATION, THIS MAKES CHANGING GEARS A LITTLE LONGER TO DO SINCE THE THROTTLE DOES NOT OPEN ALL THE WAY OUT. *TT
Additional Summary:

Toyota ID No:
NHTSA ODI No: 10119073
Date of Incident: 20050215

Vehicle: 2001 TOYOTA SIENNA
Location of Incident: EDISON, NJ
NHTSA Summary:
THE VEHICLE ACCELERATED TO 85 MPH, WHILE ON THE HIGHWAY. THE CONSUMER PASSED SEVERAL VEHICLES, CHANGING LANES, TO AVOID A COLLISION. THE CONSUMER PROCEEDED TO STRIKE A CONCRETE BARRIER. NO INJURIES WERE SUSTAINED. *NM
Additional Summary:

Toyota ID No:
NHTSA ODI No: 10115594
Date of Incident: 20050216
Vehicle: 2001 TOYOTA CAMRY
Location of Incident: WATERTOWN, NY
NHTSA Summary:
WHILE DRIVING 35 MPH THE STEERING VEERED TO THE RIGHT AND THE VEHICLE ACCELERATED WITHOUT WARNING. AS A RESULT THE CONSUMER LOST CONTROL OF THE VEHICLE AND COLLIDED INTO A TREE. NO INJURIES REPORTED. THE CAUSE HAD NOT BEEN DETERMINED. PLEASE PROVIDE ADDITIONAL INFORMATION. *JB
Additional Summary:

Toyota ID No:
NHTSA ODI No: 10111822
Date of Incident: 20050217
Vehicle: 2001 TOYOTA COROLLA
Location of Incident: FLORENCE, SC
NHTSA Summary:
WE WERE TRAVELING FROM TX TO SC USING CRUISE CONTROL (CC) ON MY 2001 TOYOTA COROLLA LE. SEAT WAS NOTED ON THE CC SWITCH ON 216,000. ON 2/17/2005 THE CRUISE CONTROL WAS ENGAGED AT 75 MPH. THE CC FAILED TO DISENGAGE WHEN BRAKES WERE APPLIED. CC FAILED TO DISENGAGE AT THE SWITCH. THE ACCELERATION WOULD NOT STOP DESPITE BRAKE APPLICATION. THE TRANSMISSION SELECTOR WAS PUT INTO NEUTRAL AND THE CAR WAS STOPPED WITH FOOT AND EMERGENCY BRAKES THE ENGINE CONTINUED TO RACE AT HIGH RPMS UNTIL THE ENGINE WAS TURNED OFF. AN I-10 ALABAMA LAW ENFORCEMENT AGENT DISABLED THE CC BY REMOVING THE CC FUSE DISCONNECTING SOMETHING AT THE THROTTLE BODY. THIS INCIDENT NEARLY CAUSED A HIGH SPEED COLLISION. THE COROLLA 1NXBR12E25Z54387 WILL BE SERVICED AT THE TOYOTA DEALERSHIP IN FLORENCE, SC.
Additional Summary:

Toyota ID No:
NHTSA ODI No: 10112859
Date of Incident: 20050219
Vehicle: 2000 TOYOTA SIENNA
Location of Incident: NASHVILLE, TN
NHTSA Summary:
THE VEHICLE ACCELERATED WHILE DRIVING IN THE NEIGHBORHOOD. THE BRAKE WAS ON, AND THE VEHICLE WENT TO 40 MPH. CONSUMER WAS ABLE TO STOP BY SHIFTING INTO PARK, APPLYING THE EMERGENCY BRAKE, AND TURNING THE KEY OFF *AK
Additional Summary:

Toyota ID No:
NHTSA ODI No: 10112616
Date of Incident: 20050223
Vehicle: 2003 LEXUS ES300
Location of Incident: SYLMAR, CA
NHTSA Summary:
TWO EPISODES OF SPONTANEOUS ACCELERATION. EPISODE ONE ON OR ABOUT AUGUST 17,2004. WHILE PULLING PAST A VEHICLE ON A FREEWAY, THE CAR DID NOT SLOW WHEN ACCELERATOR PRESSURE WAS RELEASED AND REQUIRED MOUTHPIECE PEDAL DEPRESSIONS TO OBTAIN CONTROL. THE SECOND EPISODE IS DESCRIBED BELOW.*AK
Additional Summary:

Toyota ID No:
NHTSA ODI No: 10112300
Date of Incident: 20050224
Vehicle: 2002 TOYOTA SIENNA
Location of Incident: VINELAND, NJ
NHTSA Summary:
WHILE PULLING INTO A PARKING SPACE VEHICLE ACCELERATED. AS A RESULT, VEHICLE JUMPED THE CURB AND CRASHED INTO A STORE WINDOW. NO INJURIES REPORTED. *AK *SF *NM
Additional Summary:

Toyota ID No:
NHTSA ODI No: 10124898
Date of Incident: 20050228
Vehicle: 2004 TOYOTA CAMRY
Location of Incident: BURBANK, CA
NHTSA Summary:
DT: WHEN CONSUMER'S WIFE WAS BACKING THE VEHICLE INTO THE DRIVEWAY IT ACCELERATED ON ITS OWN. CONSUMER TOOK VEHICLE TO THE DEALER WHO DETERMINED THAT NOTHING WAS WRONG WITH THE VEHICLE.*AK *NM
Additional Summary:

Toyota ID No:
NHTSA ODI No: 10145345
Date of Incident: 20050301
Vehicle: 2003 TOYOTA CAMRY
Location of Incident: SPOKANE, WA
NHTSA Summary:
2003 CAMRY WAS INVOLVED IN 2 ACCIDENTS IN WHICH THE VEHICLE SURGED FORWARD. *TS THE ELECTRONIC PART FOR THE ACCELERATOR WAS REPLACED AT THE DEALER AFTER EACH ACCIDENT. *NM
Additional Summary:

Toyota ID No:
NHTSA ODI No: 10113340
Date of Incident: 20050401
Vehicle: 2004 LEXUS ES330
Location of Incident: SYLMAR, CA
NHTSA Summary:

THE VEHICLE SUDDENLY ACCELERATED UNCONTROLLABLY. DRIVER WAS ABLE TO MAINTAIN CONTROL OF VEHICLE, AND PULLED OVER. THEN, TOWED VEHICLE OFF. TOOK VEHICLE TO THE DEALER, BUT MECHANIC COULD NOT DUPLICATE THE PROBLEM.*AK
Additional Summary:

Toyota ID No:
NHTSA ODI No: 10119774
Date of Incident: 20050301
Vehicle: 2001 LEXUS IS300
Location of Incident: HUNTINGTON STATION, NY
NHTSA Summary:
SINCE I HAVE OWNED THE VEHICLE, I HAVE HAD TWO INCIDENTS, WHICH BOTH OCCURRED RANDOMLY WITH NO PRIOR BROKE PROBLEMS OR INDICATIONS OF ISSUES WITH THE CAR. IN WHICH AS I WAS ACCELERATING, THE GAS PEDAL WOULD CONTINUE TO PRESS DOWN AND PIN ITSELF TO THE FLOOR. BOTH TIMES, THE GAS PEDAL WAS LITERALLY STUCK TO THE FLOOR AND NOT ABLE TO BE LOOSENED. THE FIRST TIME IT OCCURED, I PULLED THE EMERGENCY BRAKE AND JAMMED ON MY BRAKE PEDAL UNTIL THE GAS PEDAL POPPED BACK UP AFTER ABOUT A MINUTE, PINNED TO THE GROUND. THE SECOND TIME, I LUCKILY HAD SOMEONE WITH ME WHO INSTRUCTED ME TO PUT THE CAR IN NEUTRAL AND QUICKLY TURN OFF THE ENGINE ONE CLICK SO THAT I COULD BRAKE AND STEER MYSELF TO SAFETY. THANK GOD NO ONE WAS INJURED IN THESE INCIDENTS, BUT BOTH OCCURRENCES COULD HAVE BEEN HORRIBLE ACCIDENTS. THE CAR IS A 2002 LEXUS IS 300. MILEAGE AT TIME OF INCIDENTS: 1ST INCIDENT-ABOUT 65-70,000 MILES. 2ND INCIDENT-ABOUT 80-85,000 MILES. BOTH INCIDENTS OCCURRED WITHIN ABOUT 2-3 MONTHS OF EACH OTHER AND THE LAST INCIDENT FROM TODAY WOULD HAVE OCCURRED ABOUT 1 1/2-3 MONTHS AGO. I HAVE ONLY OWNED THE CAR SINCE OCTOBER 2002. I DO NOT KNOW THE PREVIOUS OWNER OR IF THERE WERE ANY OF THESE INCIDENTS REPORTED BEFORE MY OWNERSHIP OF THE VEHICLE, AND THE VEHICLE WAS NOT PURCHASED FROM A LEXUS CERTIFIED PRE-OWNED VEHICLE LOT. I DO HAVE A SCHEDULED APPOINTMENT WITH MY LOCAL LEXUS DEALER COMING UP THIS MONTH.
Additional Summary:

Toyota ID No:
NHTSA ODI No: 10115824
Date of Incident: 20050111
Vehicle: 2004 TOYOTA COROLLA
Location of Incident: POMPANO BEACH, FL
NHTSA Summary:
CONSUMER COMPLAINED ABOUT SUDDEN ACCELERATION ABOUT 7 TIMES. CONSUMER HAS TO STEP ON THE BRAKE SEVERAL TIMES IN ORDER TO SLOW THE VEHICLE DOWN.*AK. *BF
Additional Summary:

Toyota ID No:
NHTSA ODI No: 10115243
Date of Incident: 20050313
Vehicle: 2003 TOYOTA HIGHLANDER
Location of Incident: WHITE PLAINS, NY
NHTSA Summary:

WHILE DRIVING ABOUT 30 MPH, DRIVER PRESSED ON THE ACCELERATOR IN ORDER TO PASS A VEHICLE ON THE RIGHT HAND SIDE. THE VEHICLE REFUSED TO ACCELERATE WHEN PEDAL WAS APPLIED, AND FINALLY ACCELERATED AFTER A FEW SECONDS.*AK
Additional Summary:

Toyota ID No:
NHTSA ODI No: 10117360
Date of Incident: 20050316
Vehicle: 2003 TOYOTA CAMRY
Location of Incident: EL CERRITO, CA
NHTSA Summary:
WHILE DRIVING THE CONSUMER'S VEHICLE SUDDENLY ACCELERATED WITHOUT WARNING. THE CONSUMER HIT THE BRAKE PEDAL BUT IT WENT DOWN TO THE FLOOR AND THE VEHICLE DID NOT STOP. JUST AS QUICKLY AS THE VEHICLE STARTED ACCELERATING IT STOPPED. THE VEHICLE WAS TOWED TOT EH DEALER BUT THEY WERE UNABLE TO FIND ANYTHING WRONG. *AK *NM
Additional Summary:

Toyota ID No:
NHTSA ODI No: 10114576
Date of Incident: 20050318
Vehicle: 2003 LEXUS ES300
Location of Incident: EAST HAMPTON, NY
NHTSA Summary:
DT: THE CAR IS 2003 LEXUS ES 330. WHEN ENTERING THE EXPRESSWAY AT LOW SPEEDS UNDER 10 MPH AND ATTEMPTING TO ACCELERATE TO MERGE WITH ONCOMING TRAFFIC THERE WAS A HESITATION OF ONE SECOND OR MORE WHERE NOTHING HAPPENS. THEN SUDDENLY THE CAR SURGED OUT OF CONTROL. TOOK VEHICLE TO THE DEALERS AND DEALER SAID THIS WAS NORMAL, AND WAS FUNCTIONING THE WAY IT SHOULD FUNCTION. THE DEALER MADE AN ADJUSTMENT, BUT CONSUMER DID NOT KNOW ON WHAT THE ADJUSTMENT WAS PERFORMED ON. NO REPLACEMENTS, BUT AFTERWARDS, THE ADJUSTMENT DID NOT CORRECT THE PROBLEM. CONSUMER HAS NOT CONTACTED LEXUS AT THE TIME. *AK
Additional Summary:

Toyota ID No:
NHTSA ODI No: 10116560
Date of Incident: 20050321
Vehicle: 2004 TOYOTA CAMRY
Location of Incident: BREA, CA
NHTSA Summary:
WHEN ATTEMPTING TO LEAVE PARKING SPACE MY 2004 CAMERY V4 WITH BRAKE DEPRESSED CAR CAR ACCELERATED WITH VERY HIGH RPM. COULD NOT STOP THE CAR HITTING A GMC TRUCK. WHEN CAR COULD NOT MOVE THE TRUCK IT STOPPED DRIVE HOME WITH NO PROBLEM. CALLED DEALER THEY STATED IF THE CAR WAS NOT HAVING THE PROBLEM NOW THEY COULDNT FIX IT. AFTER DRIVING IT MY HUSBAND HAD THE SAME PROBLEM, WE TOOK IT TO THE DEALER AND DIDNT WANT THE CAR BACK UNTIL THE PROBLEM WAS CORRECTED. DEALER COULD NOT DUPLICATE PROBLEM. RETURNED CAR AFTER STATING THEY WOULD START FILE. *AK
Additional Summary:

Toyota ID No:
NHTSA ODI No: 10117375
Date of Incident: 20050325
Vehicle: 2003 TOYOTA SIENNA
Location of Incident: NEWBURGH, IN
NHTSA Summary:
WHILE PULLING INTO THE GARAGE VEHICLE SUDDENLY AND UNEXPECTEDLY ACCELERATED AND LURCHED FORWARD THROUGH THE GARAGE WALL INTO THE DINING ROOM OF CONSUMER'S HOME. VEHICLE WAS TOWED TO THE DEALER.*AK
Additional Summary:

Toyota ID No:
NHTSA ODI No: 10116409
Date of Incident: 20050326
Vehicle: 2004 TOYOTA MATRIX
Location of Incident: HERNDON, VA
NHTSA Summary:
MY 2004 TOYOTA MATRIX HAS EXPERIENCED SUDDEN ACCELERATION WHILE MY FOOT WAS ON THE BRAKE SEVERAL TIMES SINCE I HAVE PURCHASED IT. I HAVE ALWAYS BEEN ABLE TO STOP THE CAR FROM MOVING FORWARD BY FURTHER DEPRESSING THE BRAKE, BUT ON SATURDAY MARCH 26 WHILE AT A STOP SIGN, THE SUDDEN ACCELERATION HAPPENED AGAIN AND I WAS UNABLE TO IMMEDIATELY STOP MY CAR FROM LURCHING FORWARD. IT MOVED SEVERAL INCES INTO ONCOMING (PERPENDICULAR) TRAFFIC BEFORE I FINALLY THREW IT INTO PARK AND PULLED THE EMERGENCY BRAKE TO STOP IT. NO ACCIDENT OCCURRED BUT IT CAME CLOSE, AND I HAD MY TODDLER IN THE BACK SEAT. SO I CONSIDER THIS A SERIOUS MATTER. I TOOK IT TO MY DEALERSHIP (OURISMAN TOYOTA IN CHANTILLY, VA) THAT MONDAY, AND THEY KEPT IT FOR TWO DAYS. THEY RAN ALL DIAGNOSTIC TESTS POSSIBLE AND FOUND NO PROBLEM. NOTHING WAS FIXED BECAUSE NO TEST SHOWED A PROBLEM BUT I AM SCARED TO DRIVE MY CAR -- THE SUDDEN ACCELERATION HAPPENS ONLY RANDOMLY AND CANNOT BE PREDICTED. I DRIVE WITH ONLY ONE FOOT SO THIS IS NOT A CASE OF TWO-FOOTED DRIVING AND ACCIDENTALLY STEPPING ON THE ACCELERATOR. IN EACH CASE MY FOOT WAS OFF THE ACCELERATOR AND ON THE BRAKE. *AK
Additional Summary:

Toyota ID No:
NHTSA ODI No: 10117084
Date of Incident: 20050329
Vehicle: 2002 TOYOTA CAMRY
Location of Incident: TEMPE, AZ
NHTSA Summary:
VEHICLE WAS RUNNING WHILE THE DRIVER WAS SITTING INSIDE OF THE PARKING LOT. VEHICLE SUDDENLY ACCELERATED UNCONTROLLABLY. DRIVER APPLIED THE BRAKES AND THE PEDAL WENT TO THE FLOOR. DRIVER WAS UNABLE TO MAINTAIN CONTROL OF THE VEHICLE AND IT CRASHED INTO A BRICK WALL. UPON IMPACT, BOTH AIR BAGS DID NOT DEPLOY. NO INJURIES REPORTED. *AK
Additional Summary:

Toyota ID No:
NHTSA ODI No: 10285997
Date of Incident: 20050401
Vehicle: 2003 TOYOTA HIGHLANDER

Location of Incident: MANASSAS, VA
NHTSA Summary:
FL*THE CONTACT OWNS A 1985 TOYOTA HIGHLANDER. WHILE DRIVING 55 MPH SHE EXPERIENCED UNINTENDED VEHICLE ACCELERATION. SHE WAS ABLE TO DECELERATE. THE VEHICLE WAS TOWED TO THE DEALER, AND A TECHNICIAN CONCLUDED THAT THE PLASTIC PANEL BEHIND THE AIR CONDITIONING SYSTEM FELL OFF AND SUBSEQUENTLY FELL BETWEEN THE ACCELERATOR PEDAL, WHICH CAUSED THE PEDAL TO STICK. THE FAILURE AND CURRENT MILEAGES WERE 53,000.
Additional Summary:

Toyota ID No:
NHTSA ODI No: 10116260
Date of Incident: 20050402
Vehicle: 2002 TOYOTA CAMRY
Location of Incident: ROSEVILLE, CA
NHTSA Summary:
I WAS TURNING INTO THE PARKING AREA AT MY COMPLEX I ATTEMPTED TO SLOW DOWN AND APPLIED THE BRAKES AS I NORMALLY WOULD TO TURN INTO MY PARKING SPACE. AS I STARTED TO BRAKE, THE CAR STARTED TO ACCELERATE. I MADE A CONSCIOUS EFFORT TO LIFT MY FOOT OFF BOTH PEDALS TO BE SURE I WAS NOT PRESSING THE ACCELERATOR INSTEAD OF THE BRAKE. THE VEHICLE KEPT ACCELERATING. I IMMEDIATELY STARTED TO APPLY THE BRAKES, WHICH DID NOT SLOW THE VEHICLE. WHEN I REALIZED THAT I WAS NOT SLOWING DOWN, I ABORTED THE TURN INTO THE PARKING SPACE AND STRAIGHTENED OUT THE VEHICLE TO AVOID HITTING OTHER PARK CARS AND TO GIVE MORE TIME AND DISTANCE TO SAFELY BRAKE. THE VEHICLE WOULD NOT SLOW, AND KEPT ACCELERATING, CAUSING IT TO GO UP AND OVER THE CONCRETE CURB/SIDEWALK, AND RIGHT INTO A SET OF STAIRS AT THE COMPLEX. NO ONE WAS INJURED, MYSELF INCLUDED, BUT THE STAIRCASE, NEEDLESS TO SAY, IS DEMOLISHED, AS IS THE ENTIRE FRONT END OF MY CAMRY. VEHICLE IS AT BODY SHOP AS OF NOW, NO ASSESSMENT HAS BEEN DONE. I DID, HOWEVER, EARLIER THIS EVENING SIMPLY LOG ONTO GOOGLE WHERE I TYPED IN "TOYOTA CAMRY ACCELERATOR STICKING" AND CAME UP WITH THE FOLLOWING LINK: HTTP://SUBSCRIPT.BNA.COM/SAMPLES/PLD NSF/0/43A2947468D24D51852585E30003555?OPENDOCUMENT. *AR
Additional Summary:

Toyota ID No:
NHTSA ODI No: 10117872
Date of Incident: 20050405
Vehicle: 2002 TOYOTA CAMRY
Location of Incident: CHARLOTTE, NC
NHTSA Summary:
AFTER THE VEHICLE WAS PULLED THROUGH THE CAR WASH WHILE EXITING THE ATTENDANT MOTIONED THE CONSUMER TO DRIVE THE VEHICLE OUT OF THE CAR WASH. CONSUMER SHIFTED VEHICLE INTO DRIVE AND IT SUDDENLY AND UNEXPECTEDLY ACCELERATED AND LURCHED FORWARD AT HIGH SPEED AND HIT A TREE BEFORE STOPPING. CONSUMER AND PASSENGER SUSTAINED MINOR INJURIES TO THE BODY, BUT THEY DECLINED TRANSPORTATION TO THE LOCAL HOSPITAL. MANUFACTURER AND THE DEALER WERE NOTIFIED *AK
Additional Summary:

Toyota ID No:

NHTSA ODI No: 10144638
Date of Incident: 20050409
Vehicle: 2002 TOYOTA TUNDRA
Location of Incident: LANCASTER, KY
NHTSA Summary:
DT: THE CONTACT STATES THE ENGINE SURGED WHEN PULLING OUT FROM A STOP POSITION. AS SOON AS SR. ACCELERATED IT SURGED FORWARD. THE ACCELERATION WAS MORE THAN EXPECTED BASED ON THE PRESSURE BEING APPLIED TO THE GAS PEDAL. THE DEALERSHIP SERVICED THE VEHICLE FIVE TIMES, INCLUDING 1 THROTTLE THE ENTIRE ACCELERATION SYSTEM, AND COULD NOT DIAGNOSE OR DUPLICATE THE PROBLEM. *AK
Additional Summary:

Toyota ID No:
NHTSA ODI No: 10117950
Date of Incident: 20050412
Vehicle: 2003 TOYOTA CAMRY
Location of Incident: GRANDVILLE, MI
NHTSA Summary:
I PULLED INTO A BUSINESS PARKING LOT AND CAME TO A COMPLETE STOP, SHIFTED INTO REVERSE, TOOK MY FOOT OFF THE BRAKE, SLIGHTLY TOUCHED THE ACCELERATOR, REMOVED MY FOOT FROM THE ACCELERATOR AND THE CAR SUDDENLY ACCELERATED RAPIDLY ON ITS OWN. I FIRMLY APPLIED THE BRAKE TO STOP BUT THE CAR CONTINUED TO ACCELERATE. THE ACTION OF THE BRAKES LEFT A LONG PATCH OF RUBBER, BUT DID NOT SLOW THE CAR. AFTER STRIKING AN SUV, MOVING IT OUT OF THE WAY AND INTO ANOTHER CAR, THE CAR CONTINUED TO ACCELERATE UNTIL IT WAS STOPPED BY A METAL LIGHT POLE. THE CAR HAS YET TO BE EXAMINED BY A TOYOTA DEALERSHIP.*AK
Additional Summary:

Toyota ID No:
NHTSA ODI No: 10145363
Date of Incident: 20050412
Vehicle: 2005 LEXUS LS430
Location of Incident: CHERRY HILL, NJ
NHTSA Summary:
THE CONSUMER EXPERIENCED SUDDEN ACCELERATION IN HER 2005 LEXUS LS 430 WHILE PULLING INTO A PARKING LOT. *NM THE CONSUMER DOESN'T THINK THE AIR BAG INFLATED ALL THE WAY BECAUSE HER NOSE HIT THE STEERING WHEEL. HER RIGHT SHIN SMASHED INTO THE DASHBOARD WHICH RESULTED IN A VERY LARGE HEMATOMA ON HER RIGHT SHIN. SMOKE STARTED COMING OUT OF THE STEERING COLUMN AND SOON AFTER FLAME COULD BE SEEN THROUGH THE HEAVY SMOKE. THE FIRE WAS EXTINGUISHED BY THE FIRE DEPT. IT TOOK 6 1/2 FOR THE VEHICLE TO BE REPAIRED. THE CONSUMER REQUEST THAT THE MANUFACTURER REIMBURSE HER FOR HER MEDICAL BILLS, RENTAL PAYMENTS, LEASE PAYMENTS AND AMOUNT PAID TO LAWYER. *NM
Additional Summary:

Toyota ID No:
NHTSA ODI No: 10132724
Date of Incident: 20050418
Vehicle: 2003 TOYOTA AVALON
Location of Incident: BARTLESVILLE, OK

NHTSA Summary:
2003, TOYOTA AVALON, BACKING UP, SUDDEN ACCELERATION, POLE STOPPED CAR, BRAKES DIDN'T STOP RACING ENGINE, PUT CAR IN DRIVE, SHOT FORWARD INTO GOLF COURSE, BRAKES WOULDN'T WORK, PUT CAR IN PARK, DIDN'T STOP CAR, HIT TREES, UTILITY POLE. TRIED TO STEER, LITTLE OR NO RESPONSE, TURNED KEY OFF, CAR FINALLY STOPPED. CAR TOTALED, AIRBAGS DID NOT DEPLOY, SEAT BELT ON, BUT IMPACT MADE HEAD HIT LEFT SIDE OF WINDSHIELD, RECEIVED CONCUSSION, OVERNIGHT HOSPITAL STAY. REPORTED TO TOYOTA, THEY WANTED CAR, WE REFUSED TO LET THEM HAVE IT. TOYOTA SENT INSPECTOR, HE REFUSED TO OPEN HOOD, OR PUT AUTO ON HOIST TO EXAMINE, REFUSED TO EXAMINE, JUST TOOK PICTURES. THEN TOYOTA ATTORNEY SENT LETTER SAYING THEY COULDN'T SEE FROM THEIR EXAMINATION THAT THE CAR FAILED. HAD 3 WITNESSES THAT TOYOTA INSPECTOR REFUSED TO INSPECT CAR. MY AUTOMOBILE INSURANCE TOTALED AUTO AND SETTLED, THEY TOOK AUTO. *JE
Additional Summary:

Toyota ID No:
NHTSA ODI No: 10124459
Date of Incident: 20050420
Vehicle: 2003 TOYOTA CAMRY
Location of Incident: GRESHAM, OR
NHTSA Summary:
DT: CONSUMER STATES THAT THE VEHICLE TAKES OFF BY ITSELF. THIS CAN HAPPEN WHILE AT A TRAFFIC LIGHT WITH FOOT ON BRAKE. AT ONE TIME CONSUMER WAS PUTTING THE CAR ON PLANKS TO CHANGE OIL AND THE VEHICLE ACCELERATED, AND HIT CONSUMER'S SPOUSE, WHO SUSTAINED INJURIES.*AK
Additional Summary:

Toyota ID No:
NHTSA ODI No: 10126349
Date of Incident: 20050501
Vehicle: 2005 TOYOTA CAMRY
Location of Incident: BRIDGEPORT, WV
NHTSA Summary:
NEW VEHICLE DRIVEN 100 MILES. THE ONLY PROBLEM NOTICED WAS THE RADIO WOULD TURN ITSELF ON WHEN HITTING A SLIGHT BUMP IN THE ROAD. CRUISE CONTROL LIGHT DID NOT GO OFF WHEN BRAKES WERE ENGAGED, BUT WOULD DISCONNECT CRUISE CONTROL. WAS PARKING IN A MALL PARKING LOT PARALLEL TO ACCESS ROAD. SPEED NO MORE THAN 1 OR 2 MPH. FRONT WHEEL DROPPED INTO HOLE THE ACCELERATOR CAUSED THE CAR TO LURCH FORWARD. APPLIED BRAKES BUT WAS UNABLE TO KEEP CAR FROM MOVING FORWARD AT A SLOW SPEED OF 5 MPH. TURNED RIGHT TO AVOID STRIKING HANDICAP PARKING SIGN INTO THE PATH OF A PICKUP TRUCK TRAVELING ON MALL ACCESS ROAD. STRUCK TRUCK AND CONTINUED FORWARD TOWARD PEDESTRIANS ON SIDEWALK. MANAGED TO AVOID THEM AND THE ENGINE STOPPED AT THAT POINT. I APPLIED THE BRAKE SO HARD I INJURED MY RIGHT HAMSTRING MUSCLE AND WAS UNABLE TO WALK. TOYOTA SEIZED VEHICLE FOR INSPECTION AND HAS NOT RELEASED OR INSPECTED IT AS OF THIS DATE.
Additional Summary:

Toyota ID No:
NHTSA ODI No: 10130240
Date of Incident: 20050508

Vehicle: 2003 TOYOTA CAMRY
Location of Incident: PANAMA CITY, FL
NHTSA Summary:
AS I PUT CAR ON DRIVE IT JUST ACCELARATED OUT OF CONTROL. BRAKES DID NOT WORK, EMERGENCY BRAKE NEITHER. THANKS TO CURB I DID NOT RUN THRU A FENCE THAT SEPARATES SUPERMARKET'S PARKING LOT AND HOUSINGS PLAYGROUND FULL OF KIDS AND PARENTS ENJOYING MOTHER'S DAY.
Additional Summary:

Toyota ID No:
NHTSA ODI No: 10120314
Date of Incident: 20050508
Vehicle: 2004 TOYOTA CAMRY
Location of Incident: WENDELL, NC
NHTSA Summary:
DT: 5/8/05 10:15 AM AT A STOPLIGHT VEHICLE WAS STOPPED, THEN THE CAR ACCELERATED ON ITS OWN AND HIT CAR IN FRONT. CAR VERRED TO LEFT. KEY HAD TO BE REMOVED IN ORDER TO STOP THE CAR. ALL BRAKES FAILED. REGULARLY SERVICED AND RECORDS AVAILABLE *AK NO PREVIOUS PROBLEMS WITH VEHICLE EVER.
Additional Summary:

Toyota ID No:
NHTSA ODI No: 10127612
Date of Incident: 20050516
Vehicle: 2005 TOYOTA SIENNA
Location of Incident: PLAINFIELD, IL
NHTSA Summary:
OWNER OF 2005 TOYOTA SIENNA LE MINIVAN PURCHASED IN DECEMBER 2004. 1. NOTICED THAT THIS PROBLEM STARTED TO OCCUR OVER THE LAST TWO MONTHS AND THE OCCURRENCE HAS INCREASED IN FREQUENCY. 2. DESCRIPTION OF PROBLEM: WHEN DEPRESSING THE ACCELERATOR PEDAL TO ACCELERATE FROM A STOP, THE THROTTLE WILL OCCASIONALLY FAIL TO RESPOND TO THE INITIAL PRESSURE BEING APPLIED TO THE PEDAL, CONTINUING TO DEPRESS, OR APPLYING ADDITIONAL PRESSURE TO, THE ACCELERATOR PEDAL WILL EVENTUALLY CAUSE THE THROTTLE ON THE ENGINE TO ENGAGE AND THIS RESULTS IN AN UNANTICIPATED SURGE IN ENGINE OUTPUT AND ACCELERATION. MY CONCERN IS THAT THIS UNANTICIPATED ENGINE SURGE AND ACCELERATION COULD LEAD TO AND/OR CAUSE A TRAFFIC ACCIDENT. 3. BROUGHT THIS PROBLEM/ISSUE TO THE ATTENTION OF THE SERVICE DEPARTMENT AT LOMBARD TOYOTA (LOMBARD, ILLINOIS). SPOKE WITH TWO DIFFERENT SERVICE WRITERS AT LOMBARD TOYOTA AND THEY BOTH MENTIONED THAT THIS WAS A KNOWN ISSUE BY BOTH TOYOTA AND THE DEALERSHIP. LOMBARD TOYOTA MENTIONED THAT THEY ARE CURRENTLY UNABLE TO DO ANYTHING TO CORRECT THIS PROBLEM/ISSUE AT THIS TIME.
Additional Summary:

Toyota ID No:
NHTSA ODI No: 10121647
Date of Incident: 20050518
Vehicle: 2005 TOYOTA CAMRY
Location of Incident: RICHMOND, VA
NHTSA Summary:

2003 CAMRY XLE V6. CAR HESITATES OR LAGS UPON ACCELERATION. FROM DEAD STOP ACCELERATOR PEDAL HAS A LAG BEFORE CAR WILL ACCELERATE. WHILE MERGING ONTO HIGHWAY, CAR WILL HESITATE WHEN DEPRESSING THE ACCELERATOR BEFORE THE CAR WILL ACCELERATE. DROVE ANOTHER 2003 CAMRY V6 AND EXPERIENCED THE SAME THING.
Additional Summary:

Toyota ID No:
NHTSA ODI No: 10122416
Date of Incident: 20050523
Vehicle: 2005 TOYOTA SIENNA
Location of Incident: MURFREESBORO, TN
NHTSA Summary:
I WAS BACKING OUT OF A PARKING SPACE IN A PARKING LOT. I PUT THE CAR IN REVERSE, PLACE MY FOOT ON THE BRAKE, PUT THE CAR INTO DRIVE, LIFTED MY FOOT OFF OF THE BRAKE AND THE CAR IMMEDIATELY BEGAN TO ACCELERATE WITHOUT MY FOOT EVEN TOUCHING THE ACCELERATOR. WHEN I PUT MY FOOT ON THE BRAKE, THE BRAKE PEDAL WENT ALL THE WAY DOWN TO THE FLOOR WITHOUT STOPPING THE VEHICLE. THE VAN STRUCK ANOTHER VEHICLE THAT WAS PARKED IN THE PARKING LOT, WENT OVER THE CURB OF THE PARKING LOT, DOWN AN EMBANKMENT INTO A RAVINE AND CRASHED TOWARDS A TREE. THE PASSENGER THAT WAS IN THE FRONT SEAT THEN REACHED OVER AND PUT THE CAR INTO PARK, WHICH BROUGHT THE CAR TO A STOP. THE WHOLE TIME THE CAR WAS MOVING I WAS TRYING TO STOP THE CAR BY PUMPING THE BRAKES, BUT THEY DID NOT WORK. THE CAR WAS ACCELERATING THE ENTIRE TIME UNTIL THE PASSENGER STOPPED IT BY SHIFTING INTO PARK. THE AIRBAGS DID NOT DEPLOY. DAMAGE WAS DONE TO THE FRONT PASSENGER BUMPER AND SIDE OF THE CAR. THE DRIVERS SIDE FRONT TIRE EXPLODED. AFTER THE ACCIDENT, THE BRAKES DID FUNCTION.
Additional Summary:

Toyota ID No:
NHTSA ODI No: 10129972
Date of Incident: 20050604
Vehicle: 2005 TOYOTA CAMRY
Location of Incident: FOXBORO, MA
NHTSA Summary:
DT: THE CONSUMER OWNS A 2005 TOYOTA CAMRY; SHE TOOK THE VEHICLE TO THE CAR WASH. THE VEHICLE WAS PUT INTO NEUTRAL, ONCE IT CAME OFF OF THE CONVEYER BELT SHE ENTERED IN THE VEHICLE, PUT HER FOOT ON THE GAS AND THE VEHICLE DID NOT MOVE, THE VEHICLE WAS PUT INTO DRIVE WITH HER FOOT ON THE BRAKE. THE VEHICLE ACCELERATED INTO TRAFFIC. THE VEHICLE HIT A MEDIAN STRIP. THE AIRBAGS DEPLOYED, AND THE CONSUMER WAS KNOCKED UNCONSCIOUS. SHE THEN HIT A SCHOOL BUILDING. SHE HAS A FRACTURED LEG, NECK AND A TORN ROTOR CUFF. THE VEHICLE WAS INSPECTED BUT NOTHING WAS FOUND. THIS HAPPENED JUNE 4, 2005. THE CONSUMER IS NOT SURE WHETHER THERE WAS A POLICE REPORT TAKEN. SHE WAS TAKEN TO THE EMERGENCY ROOM IMMEDIATELY AND HAS NOT LEFT THE HOSPITAL SINCE. THE VIN WAS NOT AVAILABLE. SHE IS STILL IN HOSPITAL. *JB
Additional Summary:

Toyota ID No:
NHTSA ODI No: 10129785
Date of Incident: 20050604

Vehicle: 2003 TOYOTA HIGHLANDER
Location of Incident: LARGO, FL
NHTSA Summary:
DT: CALLER SAID THAT TWICE HIS VEHICLE WOULD NOT ACCELERATE WHEN HITTING THE GAS PEDAL, WHEN PRESSING THE GAS PEDAL TO PASS A CAR NOTHING HAPPENED FOR A FEW SECONDS. DEALER SAID THERE WAS NOTHING THEY COULD DO ABOUT IT, AND THAT WAS THE WAY THE VEHICLE WAS DESIGNED. DEALER SAID THEY COULD NOT DUPLICATE THE PROBLEM. MANUFACTURER HAS NOT BEEN CONTACTED YET.*AK
Additional Summary:

Toyota ID No:
NHTSA ODI No: 10135915
Date of Incident: 20050605
Vehicle: 2003 TOYOTA HIGHLANDER
Location of Incident: WALDOBORO, ME
NHTSA Summary:
DT: 2003 TOYOTA HIGHLANDER V6: THE CONSUMER DROVE OFF THE LOT ON JUNE 3, 2005. THE CRUISE CONTROL BEHAVED IRRATICALLY AND IT OFTEN HELT AS IF IT WAS ACCELERATING A COUPLE OF MILES BEHIND THE DESIRED SPEED. THE CONSUMER REQUESTED TO PASS THIS TURKEY WHICH YIELDED DIFFERENT RESULTS. THERE IS SOMETIMES AREWARD DOWN SHIFTING AND RAPID ACCELERATION WHICH IS PRECEDED BY HESITATION. THE CONSUMER APPROACHED A VILLAGE INTERSECTION, DOWNHILL WITH HIS FOOT ON THE BRAKE. THE CONSUMER TOOK HIS FOOT OFF OF THE BRAKE AND BEGAN TO MAKE A LEFT TURN ONTO DESIRED STREET. THE CONSUMER TRIED TO APPLY A BIT OF GAS AND NOTHING HAPPENED. THE CONSUMER TRIED TO APPLY A BIT MORE GAS AND AGAIN NOTHING HAPPENED. THE THIRD TIME THE CONSUMER ADDED A BIT MORE GAS AND THE VEHICLE ACCELERATED TOO FAST CAUSING THE DRIVER AND PASSENGER'S HEADS TO TIP BACK. THIS WAS A NARROW MAIN STREET IN A MAIN VILLAGE. THERE WERE LOTS OF POSSIBLE TARGETS, CARS/KIDS BIKES AND OTHERS. THEN THERE WAS THE UNANTICIPATED DOWN SHIFTING FOR BRAKING EFFECT THAT TIPPED HEADS FORWARD, BUT THAT WAS ANOTHER STORY FOR ANOTHER DAY, AND NOT QUITE AS ANNOYING OR SCARY OF THE SAME CONCERN. THE DEALER'S SERVICE MANAGER FIRST ASSERTED THAT THERE WERE NO ADJUSTMENTS ACCESSIBLE FOR THE MECHANICS INSABILITY TO DO SOMETHING. AFTER APPLYING MORE GAS AND VEHICLE HESITATION CONSUMER SEARCHED FOR A TECHNICAL SERVICE BULLETIN (TSB) AND FOUND NONE, BUT FOUND ONE FROM JUNE 1, 2005 THAT RELATED TO RECALIBRATING OF THE TRANSMISSION. ABSOLUTELY NO MENTION OF EXPRESSIONS OF CONCERN OR EARLIER TSBS. *AK *MR
Additional Summary:

Toyota ID No:
NHTSA ODI No: 10173692
Date of Incident: 20050607
Vehicle: 2005 TOYOTA COROLLA
Location of Incident: LAGUNA HILLS, CA
NHTSA Summary:
D7*: THE CONTACT STATED WHILE DRIVING 25 MPH ON NORMAL ROAD CONDITIONS THE VEHICLE MAINTAINED THE SAME SPEED WITHOUT DEPRESSING THE ACCELERATOR PEDAL. THE PROBLEM PERSISTED AT ANY SPEED THERE AFTER. THERE WERE NO WARNING LIGHTS ILLUMINATED PRIOR THE INCIDENT. THE VEHICLE WAS TAKEN TO THE DEALERSHIP WHO OBSERVED NO ABNORMALITIES AFTER A DIAGNOSTIC CHECKUP AND ROAD TEST. THE DEALER ALSO STATED THERE WAS NOT A MECHANISM TO SLOW DOWNS THE SPEED AS THERE USED TO BE IN OLDER MODELS. THE VEHICLE WAS TAKEN

TO A DIFFERENT DEALERSHIP FOR A SECOND OPINION WHO DETERMINED THERE WAS A VALVE STUCK OPEN IN THE FUEL SYSTEM AND REPAIR IT. BUT THE PROBLEM WAS PERSISTED. THE MANUFACTURER WAS CONTACTED WHO REFERRED THE CONTACT TO A DEALERSHIP. THE CONTACT EXPRESSED CONCERN BECAUSE THE ONLY WAY TO REDUCE THE SPEED WAS BY DEPRESSING HARD ON THE BRAKE PEDAL TO PREVENT A COLLISION. UPDATED 12/5/2006 *TGM
Additional Summary:

Toyota ID No:
NHTSA ODI No: 10127269
Date of Incident: 20050620
Vehicle: 2004 TOYOTA CAMRY
Location of Incident: WILLINGTON, DE
NHTSA Summary:
DT: CALLER'S MOTHER-IN-LAW JUST GOT HER CAR WASHED AND WHEN SHE PULLED OUT OF THE CAR WASH, THE VEHICLE ACCELERATED WITHOUT WARNING. SHE PUMPED THE BRAKES AND TRIED TO STOP THE CAR, AND IT WOULD NOT STOP. THE CAR WENT INTO AN 8 LANE HIGHWAY AND WAS HIT BY AN 18 WHEELER AND A PICKUP TRUCK. DRIVER SUSTAINED INJURIES AND SO DID THE DRIVER OF THE PICKUP TRUCK. TRACTOR TRAILER DRIVER REFUSED TREATMENT. VEHICLE WAS TOTALED. MANUFACTURER WAS CONTACTED, AND WILL BE GETTING BACK TO CALLER. CALLER STATED HIS JUST FOUND OUT THAT IN THE SPRING HER MOTHER-IN-LAW STARTED THE VEHICLE AND THE ENGINE RAZED WHILE IT WAS IN PARK. THE ONLY WAY TO STOP IT WAS TO TURN IT OFF. AFTER THE ACCIDENT THE TACHOMETER SHOWED 7000 RPMS, AND THE SPEEDOMETER INDICATED 100 MPH. POLICE REPORT WAS FILED.*AK
Additional Summary:

Toyota ID No:
NHTSA ODI No: 10126111
Date of Incident: 20050621
Vehicle: 2000 LEXUS ES300
Location of Incident: DOTHAN, AL
NHTSA Summary:
AS I WAS PULLING INTO A PARKING SPACE, MY 2000 LEXUS ES SUDDENLY ACCELERATED AND WENT OVER THE CURB AND A SMALL GRASS EMBANKMENT. I IMMEDIATELY APPLIED BRAKES AND IT DID START SLOWING DOWN. I FINALLY GOT THE CAR STOPPED, THANKFULLY NO ONE WAS IN THAT PARKING LOT. DON'T KNOW WHAT DAMAGE HAS BEEN DONE TO THE CAR. THIS IS FRIGHTENING BECAUSE THERE WAS ABSOLUTELY NO CONTROL OVER THE CAR.
Additional Summary:

Toyota ID No:
NHTSA ODI No: 10127859
Date of Incident: 20050620
Vehicle: 2004 TOYOTA COROLLA
Location of Incident: REDDING, CA
NHTSA Summary:
I WAS BRAKING FOR A STOPLIGHT. AFTER COMING TO A COMPLETE STOP THE ENGINE BEGAN TO RACE WITH THE RPMS RISING ABOVE 4000 BEFORE I TURNED OFF THE IGNITION. I HAD TO PRESS DOWN ON THE BRAKE PEDAL AS HARD AS I COULD AND WAS BARELY ABLE TO HOLD THE CAR AT THE INTERSECTION. THIS WAS THE SECOND TIME THIS HAD HAPPENED. THE FIRST TIME OCCURRED APPROXIMATELY 2 MONTHS EARLIER.

DURING THAT INCIDENT, THE ENGINE RACED TO OVER 4,000 RPMS BEFORE I SHUT OFF THE IGNITION. AFTER BOTH INCIDENTS, I TOOK THE CAR TO LITHIA TOYOTA IN REDDING, CA. BOTH TIMES THEY SAID THAT NO ERROR CODES WERE SET AND SINCE THE CAR ENGINE DID NOT RACE THEY DID NOT PERFORM THE TEST DRIVES. THERE WAS NO THING WRONG WITH IT. THEY STATED THA THEY HAD NEVER HEARD OF ANY OTHER TOYOTA VEHICLES BEHAVING IN THIS MANNER, YET I FOUND 27 SIMILAR COMPLAINTS REGARDING THE 2004 CAMRY ON THIS WEBSITE, AND 24 SUCH COMPLAINTS FOR 2002 THROUGH 2005 MODEL YEAR COROLLAS.
Additional Summary:

Toyota ID No:
NHTSA ODI No: 10128711
Date of Incident: 20050630
Vehicle: 2005 TOYOTA SIENNA
Location of Incident: HAMPTON, TN
NHTSA Summary:
D7: CONTACT OWNS A 2005 TOYOTA SIENNA. THE VEHICLE HAS SEVERE HESITATION, ALMOST IMPOSSIBLE TO DRIVE THE VEHICLE ON A WET ROAD OR ON A SNOWY ROAD. GAS PEDAL AND TRANSMISSION DO NOT SEEM TO CONNECT. NO CRASHES, NO POLICE REPORTS, NO FIRES. THE VEHICLE HAS BEEN TO TOYOTA DEALER 5 TIMES; THE MECHANIC CAME BACK AND SAID THEY FOUND NOTHING WRONG WITH VEHICLE. *AK (11/09/05) THE TRANSMISSION WOULD DOWN SHIFT VERY HARSH ON TURNS AND ON HILLS. THE SERVICE DEALER PLACED AN UPGRADED COMPUTER IN THE VEHICLE BUT THE PROBLEM WORRENED. *SC
Additional Summary:

Toyota ID No:
NHTSA ODI No: 10127521
Date of Incident: 20050701
Vehicle: 2003 TOYOTA CAMRY
Location of Incident: PHOENIX, AZ
NHTSA Summary:
DT: CONSUMER STATED VEHICLE ACCELERATED WHILE IN REVERSE FOR THE SECOND TIME. THE VEHICLE MADE 3 LIKE TURN AND HIT AN ELECTRICAL BOX WHICH CAUSED THE POWER TO GO OUT IN APPROXIMATELY THREE HOMES AND DAMAGED THE VEHICLE WHEN THE VEHICLE WAS FIRST DELIVERED IN APRIL 2002 THIS HAPPENED. BUT CONSUMER THOUGHT IT WAS BECAUSE IT WAS A NEW VEHICLE. ON JULY 5, 2005 A POLICE REPORT WAS FILED, AND THE VEHICLE WAS TOWED AND WAS TAKEN TO BELL TO VOTA. WHILE THE VEHICLE WAS IN REVERSE IT CONTINUED TO ACCELERATE. *AK
Additional Summary:

Toyota ID No:
NHTSA ODI No: 10127662
Date of Incident: 20050703
Vehicle: 2001 TOYOTA CAMRY
Location of Incident: KELSO, WA
NHTSA Summary:
D7: 2001 TOYOTA CAMRY XLE, CRUISE CONTROL DOES NOT HOLD VEHICLE BACK. THIS IS NOT A PROBLEM ON LEVEL GROUND OR UP HILL. IF THE VEHICLE IS GOING DOWN HILL, THE CRUISE CONTROL WILL NOT STAY, CAUSING THE VEHICLE TO ACCELERATE AT A FASTER SPEED THAN IS SAFE UNDER THE CIRCUMSTANCES. AFTER THE CONSUMER PURCHASED THE VEHICLE, THE DEALER AND THE MANUFACTURER TOLD CONSUMER

THAT WAS THE WAY THE VEHICLE PERFORMED. CONSUMER CONSIDERS THIS IS A SAFETY ISSUE, AND IT IS NOT ACCEPTABLE. CONSUMER FILED A COMPLAINT # 20050704 ON JULY 6, 2005 WITH TOYOTA. THERE ARE NO OTHER KNOWN PROBLEMS WITH THIS VEHICLE AND IT IS STILL UNDER WARRANTY. *AK
Additional Summary:

Toyota ID No:
NHTSA ODI No: 10292547
Date of Incident: 20050706
Vehicle: 2000 TOYOTA CAMRY
Location of Incident: SAN JOSE, CA
NHTSA Summary:
TL* THE CONTACT OWNS A 2000 TOYOTA CAMRY. THE ACCELERATOR PEDAL BECOMES STUCK WHILE IN FIRST AND SECOND GEAR. TO RELEASE THE ACCELERATOR PEDAL HE HAS TO STOMP ON THE PEDAL. ALSO HE EXPERIENCED DIFFICULT STEERING WHILE DRIVING. THE MANUFACTURER WAS NOTIFIED BUT NO ASSISTANCE WAS PROVIDED. THE CURRENT MILEAGE WAS 65,000. THE FAILURE MILEAGE WAS 15,000.
Additional Summary:

Toyota ID No:
NHTSA ODI No: 10128953
Date of Incident: 20050711
Vehicle: 2005 TOYOTA SIENNA
Location of Incident: AUGUSTA, GA
NHTSA Summary:
CONSUMER STATES: HIS CAR HESITATES WHEN HE ACCELERATES. HE JUST BOUGHT THE CAR 2 WEEKS AGO AND IT HAS BEEN DOING IT SINCE HE BOUGHT THE CAR. IT MAINLY HAPPENS WHEN HE IS SLOWING DOWN. WHEN HE PRESSES THE GAS PEDAL, IT TAKES ABOUT 1 OR 2 SECONDS TO ENGAGE. HE IS CONCERNED THIS WILL HAPPEN IN CONGESTED TRAFFIC. HE HAS NOT YET TALKED TO THE DEALER. HE HAS NOT YET TALKED TO THE MANUFACTURER BUT HE PLANS ON DOING THAT TODAY. CONSUMER WAS ONLY ABLE TO PROVIDE THE CITY, STATE AND PHONE NUMBER OF THE DEALER. *NM
Additional Summary:

Toyota ID No:
NHTSA ODI No: 10129267
Date of Incident: 20050717
Vehicle: 2004 LEXUS ES330
Location of Incident: ANTIOCH, CA
NHTSA Summary:
2004 LEXUS ES 330 HAS SEVERE HESITATION AND SURGING PROBLEMS WHEN TRYING TO ACCELERATE UNDER TRAFFIC CONDITIONS SUCH AS MERGING ONTO FREEWAY WHERE YOU MIGHT NEED TO SLOW AND THEN ACCELERATE. WE EXPERIENCED DANGEROUS SITUATIONS DUE TO HESITATION AND THEN SUDDEN SURGE. SECOND TRIP TO DEALER AND THEY SAY ITS A KNOWN PROBLEM AND THERE IS NOTHING THEY CAN DO. I BELIEVE IT IS A SAFETY ISSUE AND A RECALL SHOULD BE ENFORCED. LEXUS SEEMS TO THINK IT IS ONLY AN INCONVENIENCE.
Additional Summary:

Toyota ID No:

NHTSA ODI No: 10130854
Date of Incident: 20050727
Vehicle: 2001 LEXUS ES300
Location of Incident: SAN FRANSISCO, CA
NHTSA Summary:
DT: CONSUMER OWNED A 2001 ES 300. CONSUMER WAS GETTING INTO A PARKING PLACE WHEN HE WENT OVER A SPEED BUMP. HE STOPPED WITH VEHICLE IN REVERSE, THEN, PLACED THE CAR IN DRIVE AND THE VEHICLE SURGED FORWARD, CONSUMER TRIED TO APPLY BRAKE AND BRAKES FAILED. THE VEHICLE WOULD NOT STOP, ENDED UP STRIKING A CONCRETE PILLAR. THERE WERE NO INJURIES. NO POLICE REPORT, BUT IT WAS REPORTED TO INSURANCE COMPANY. THE VEHICLE WAS MOVING FORWARD WITH GREAT FORCE AND BRAKES COULD NOT STOP VEHICLE. CONSUMER WAS AWARE OF AN INVESTIGATION THAT WAS IN PROGRESS ON THIS MATTER. ALTHOUGH INVESTIGATION WAS OFFICIALLY CLOSED, NHTSA SAID THAT THEY WOULD MONITOR THESE TYPE OF VEHICLES. CONSUMER SAID THAT INVESTIGATION WAS ON THE ELECTRONIC THROTTLE CONTROL *AK
Additional Summary:

Toyota ID No:
NHTSA ODI No: 10131375
Date of Incident: 20050729
Vehicle: 2005 TOYOTA CAMRY
Location of Incident: SILVERSPRING, MD
NHTSA Summary:
DT: ON JULY 29, 2005 WHEN THE CONSUMER PRESSED THE BRAKE PEDAL THE VEHICLE ACCELERATED. THIS HAD OCCURRED 3 TIMES. THE VEHICLE HAS A LITTLE OVER 1600 MILES ON IT. THE MANUFACTURER GAVE THE CONSUMER A REFERENCE NUMBER TO GIVE TO THE DEALER WHEN HE TAKES THE VEHICLE TO THEM. *NM
Additional Summary:

Toyota ID No:
NHTSA ODI No: 10132899
Date of Incident: 20050805
Vehicle: 2007 TOYOTA SIENNA
Location of Incident: LAKE ZURICH, IL
NHTSA Summary:
I PULLED INTO A PARKING LOT AND MADE A RIGHT TURN TO PULL INTO A PARKING SPACE, I WAS HALFWAY INTO THE SPACE, MY FOOT WAS ON THE BRAKE PEDAL, WHEN I FELT THE VAN JERK IT THEN SUDDENLY ACCELERATED. WENT OVER THE RAISED CURB IN FRONT INTO THE EXIT LANE OF THE SHOPPING CENTER TURNED AROUND BACK INTO THE PARKING LOT(THE WHEEL WAS TURNED TO THE RIGHT STILL) HIT THE BUILDING BREAKING A COUPLE OF WINDOWS, AND THEN CAME TO A STOP AFTER HITTING A BARRICADED DUMPSTER ALONG THE WAY. ALL THE WHILE I WAS HITTING THE BRAKES, BUT THEY DIDN'T SEEM TO WORK. THE AIRBAG DEPLOYED IN THE PROCESS,THE FRONT OF THE VAN WAS BADLY DAMAGED. THANKFULLY THERE WERE NO PEDESTRIANS IN THE LOT AND I DIDN'T HIT ANY OTHER VEHICLE AND MY SON AND I WALKED AWAY WITH MINOR INJURIES. I HAVE CONTACTED TOYOTA. THEY INSPECTED THE VAN LAST WEEK AND I AM WAITING TO HEAR THEIR REPORT. THE VAN HASN'T BEEN FIXED YET.I AM WAITING TO HEAR FROM TOYOTA AS TO THE NEXT COURSE OF ACTION. ABOUT AN HOUR BEFORE THIS INCIDENT OCCURRED, I WAS PULLING OUT OF ANOTHER PARKING SPACE IN REVERSE WHEN THE VAN JUST STOPPED AND DIDN'T MOVE. I RESTARTED IT,PUT IT ON REVERSE AND THEN IT MOVED ALRIGHT,WAS HOMPY-I THOUGHT A TIRE

WAS FLAT-STOPPED AND CHECKED TO SEE ALL OF THEM-THEY WERE FINE, AND AFTER THAT ALL WAS SMOOTH AND WELL UNTIL THE CRASH. *JB
Additional Summary:

Toyota ID No:
NHTSA ODI No: 10133608
Date of Incident: 20050801
Vehicle: 2000 TOYOTA TACOMA
Location of Incident: EL PASO, TX
NHTSA Summary:
FAULTY APPS (ACCELERATOR PEDAL POSITION SENSOR). VEHICLE IS DESIGNED WITH A COMBINATION OF MECHANICAL AND DRIVE BY WIRE THROTTLE BODY. WHEN ACCELERATING FROM A STOPPED POSITION ACCELERATOR PEDAL IS DEPRESSED WITH NO RESPONSE TO ENGINE OR VEHICLE MOVEMENT. THIS POSES A SAFETY THREAT IF DRIVER IS IN A LIFE OR DEATH SITUATION AND CANNOT MOVE VEHICLE OUT OF HARMS WAY.
Additional Summary:

Toyota ID No:
NHTSA ODI No: 10132444
Date of Incident: 20050805
Vehicle: 2005 TOYOTA CAMRY
Location of Incident: FLOWERY BRANCH, GA
NHTSA Summary:
2005 TOYOTA CAMRY SE DEVELOPED A PROBLEM WITH BUILDING UP ACCELERATION AFTER SLOWING DOWN *MB. WHEN ACCELERATING FROM A LOW SPEED THE CONSUMER NOTICED HESITATION WHILE TRYING TO REGAIN SPEED. *SM
Additional Summary:

Toyota ID No:
NHTSA ODI No: 10131955
Date of Incident: 20050806
Vehicle: 2004 TOYOTA CAMRY
Location of Incident: CRESTWOOD, KY
NHTSA Summary:
DT: CONSUMER OWNED 2004 TOYOTA CAMRY WITH V4 ENGINE. CONSUMER WAS PULLING INTO A PARKING SPOT WHEN THE VEHICLE SUDDENLY ACCELERATED AND SHOT THROUGH THE PARKING SPOT, STRIKING A METAL POST, AND DAMAGING THE PASSENGER FRONT OF VEHICLE. THE BUMPER, FRONT FENDER, AND BOTH PASSENGER DOORS. WHEN THE VEHICLE ACCELERATED CONSUMER FELT THAT ACCELERATOR PEDAL LEFT THE BOTTOM OF FOOT AND CONTINUED TO THE FLOORBOARD WITH NO ASSISTANCE. THIS HAPPENED ON AUGUST 6, 2005 AT ABOUT 7:00 PM IN LOUISVILLE, AT TOWNCARE CENTER ON HURSTBOURN LANE. CONSUMER WENT TO DEALER, AND DEALER REFUSED TO LOOK AT VEHICLE, THEY SAID THAT THEY WERE NOT FAMILIAR WITH ANY PROBLEM LIKE THIS, AND TOLD CONSUMER THAT THE FLOOR MAT STUCK TO THE PEDAL, CAUSING THE ACCELERATION. THERE WAS NO POLICE REPORT. MANUFACTURER WAS CONTACTED AND SAID THEY OPENED A CASE AND DEALER WAS RESPONSE TO CONTACT CONSUMER IN ABOUT 3 DAYS *AK
Additional Summary:

Toyota ID No:

NHTSA ODI No: 10133985
Date of Incident: 20050812
Vehicle: 2003 TOYOTA CAMRY
Location of Incident: DOWEY, AZ
NHTSA Summary:
DT: VEHICLE STALLED IN THE MIDDLE OF THE ROAD ON AUGUST 12, 2005. TOOK THE VEHICLE TO THE DEALER AND THEY COULD NOT FIND ANYTHING WRONG AND SENT THE CONSUMER HOME WITH THE INVOICE. THERE WAS NO FOR WARNING. ABOUT 4 WEEKS BEFORE WHEN PUSHING ON THE ACCELERATOR PEDAL IT SEEMED LIKE IT TOOK A FEW SECONDS FOR THE VEHICLE TO ACCELERATE. *AK
Additional Summary:

Toyota ID No:
NHTSA ODI No: 10132778
Date of Incident: 20050812
Vehicle: 2003 TOYOTA CAMRY
Location of Incident: PAINESVILLE, OH
NHTSA Summary:
DT: THE CRUISE CONTROL TOOK OFF AND ACCELERATED ON ITS OWN. WENT TWO YARDS AND HIT A TELEPHONE POLE. UPON IMPACT, THE AIR BAGS DID DEPLOY. CONTACTED TOYOTA. THERE WERE REPORTED TO CALL BACK, COME AND LOOK AT VEHICLE. THIS HAPPENED ON AUGUST 13, 2005. THE CONSUMER DID NOT WANT TO GIVE PHONE NUMBER *AK
Additional Summary:

Toyota ID No:
NHTSA ODI No: 10168580
Date of Incident: 20050813
Vehicle: 2004 TOYOTA CAMRY SOLARA
Location of Incident: CICERO, NY
NHTSA Summary:
THROTTLE LAG AT LOW SPEED AND FROM STOP IS INCONSISTENT AND HAS BEEN THE CAUSE FOR SEVERAL CLOSE CALLS WHEN PULLING INTO TRAFFIC. MANUFACTURER WAS INFORMED; DEALER INVESTIGATED, STATES THIS IS NORMAL AND NOTHING CAN BE DONE, THAT LAG IS "ACCEPTABLE". SOME INSTANCES HAVE BEEN SEVERAL SECONDS BEFORE ACTUAL THROTTLE RESPONSE. DRIVER HAS TO USE HARDER ACCELERATION TO COMPENSATE WHEN THIS HAPPENS. THIS IS A SAFETY ISSUE THAT TOYOTA IS AWARE OF BUT DECLINES TO ADMIT IT IS A PROBLEM. DRIVER IS VERY CONCERNED THAT THIS ISSUE WILL BE CAUSE OF AN ACCIDENT. *JB
Additional Summary:

Toyota ID No:
NHTSA ODI No: 10133333
Date of Incident: 20050817
Vehicle: 2004 TOYOTA CAMRY
Location of Incident: MAYFIELD HEIGHTS, OH
NHTSA Summary:
DT: THE GAS PEDAL AND THE BRAKE PEDAL ARE TOO CLOSE TOGETHER. THIS HAS CAUSED THE CONSUMER AT LEAST FOUR ACCIDENTS. BECAUSE WHEN THE CONSUMER GOES TO PRESS ON THE BRAKE IT WILL ACCIDENTALLY HIT THE GAS PEDAL. THE CONSUMER WAS SO SURPRISED EVERY TIME THIS OCCURRED THAT SHE WAS UNABLE TO STOP THE VEHICLE UNTIL SHE HIT SOMETHING. THREE TIMES THIS OCCURRED. THE

CONSUMER WAS TRYING TO STOP IT WHILE BETWEEN OTHER VEHICLES. THE CONSUMER WAS TAKEN TO THE HOSPITAL IN MAY 2005. SHE OBTAINED INJURIES BECAUSE OF THIS ACCIDENT. A POLICE REPORT IS WERE TAKEN. ON 6-17-05 THE CONSUMER HIT A LIGHT POLE. PREVIOUSLY, THE CONSUMER HAD CONTACTED THE MANUFACTURER, AND RECEIVED NO ASSISTANCE FROM THEM. ALSO, THE CONSUMER ALSO STATED THAT THERE WAS NOT ENOUGH LEG ROOM IN THE DRIVER SIDE. *AK
Additional Summary:

Toyota ID No:
NHTSA ODI No:
Date of Incident: 20050823
Vehicle: 2005 TOYOTA SIENNA
Location of Incident:
NHTSA Summary:
I bought a new 2005 Toyota Sienna in Dec. '04. On Aug. 1st, it was involved in a crash. I was pulling into a parking space, foot on the brake, expecting the van to come to a halt, when I felt a jerk and it suddenly accelerated, went over the raised curb in front, onto the exit lane of the shopping center, back into the parking lot, hit the side of the building breaking windows there, hit a barricaded dumpster and then came to a stop. All the while my foot was on the brakes and they didn't seem to work. All this happened within a few seconds. The airbag deployed. Thankfully my son and I walked away with minor injuries and there were no pedestrians in the lot at the time and I did not hit any other vehicle. Earlier that day, the van stalled when I was pulling out of a parking space. I restarted it and put it in reverse and it was fine, though it seemed to be a bit bumpy. I checked all the tires and they were fine. After that it was smooth until the incident of the crash. I informed Toyota they did an inspection and said all was well-the vehicle performed as designed! Currently it is being fixed.
Additional Summary:

Toyota ID No:
NHTSA ODI No: 10240123
Date of Incident: 20050923
Vehicle: 2000 TOYOTA TUNDRA
Location of Incident: BOZEMAN, MT
NHTSA Summary:
I HAD THE ACCELERATOR STICK WHILE PARALLEL PARKING MY 2000 TOYOTA TRUCK ABOUT 4 YEARS AGO. I TRIED TO BRAKE, THEN PUT THE VEHICLE IN REVERSE, ENDED UP DAMAGING BOTH THE VEHICLE IN FRONT AND BEHIND MY VEHICLE. AT THE TIME, I DIDN'T UNDERSTAND WHAT HAD OCCURRED. NOW I SEE OTHERS HAVE EXPERIENCED THE SAME PROBLEM. *TR
Additional Summary:

Toyota ID No:
NHTSA ODI No: 10113972
Date of Incident: 20050823
Vehicle: 2000 LEXUS ES300
Location of Incident: HOUSTON, TX
NHTSA Summary:
DT: 2000 LEXUS ES 300. THE CAR WAS NOT SHIFTING PROPERLY OR ACCELERATE UPON PRESSING THE GAS PEDAL AND WHEN IT DID ACCELERATE IT SHOCKED HOW MUCH WHEN SLOWING DOWN AND THEN TRYING TO SPEED UP WAS TOLD BY THE DEALERSHIP THAT THE COMPUTER COULD NOT READ FAST ENOUGH TO KNOW WHAT TO DO. THIS DIDN'T HAPPEN EVERY TIME, IN AN HOUR OF DRIVING I HAPPENED AT LEAST 3 TIMES. THIS WAS A SAFETY ISSUE. IN STOP AND GO TRAFFIC AND CHANGING LANES. NOTHING

HAPPENED. IT TOOK 3 SECONDS FOR THE VEHICLE TO REACT TO THE ACCELERATION. THIS HAS HAPPENED MULTIPLE TIMES. *AK
Additional Summary:

Toyota ID No:
NHTSA ODI No: 10135486
Date of Incident: 20050827
Vehicle: 2005 TOYOTA SIENNA
Location of Incident: MANLIUS, NY
NHTSA Summary:
ON SEVERAL INSTANCES WHEN YOU LET OFF THE GAS TO GO AROUND A CORNER THEN WHEN YOU ACCELERATE NOTHING HAPPENS THEN THE ENGINE TRIES TO COMPENSATE BY OVER REVVING. ON ANOTHER OCCASION PULLED INTO TRAFFIC, STEPPED ON THE GAS NOTHING HAPPENED FOR SEVERAL SECONDS, ALMOST BROADSIDED. *NM
Additional Summary:

Toyota ID No:
NHTSA ODI No: 10135492
Date of Incident: 20050904
Vehicle: 2003 TOYOTA CAMRY
Location of Incident: FISHERS, IN
NHTSA Summary:
AFTER BEING INVOLVED IN A REAR END COLLISION (WITH MY CAMRY XLE V6) WHEN REVERSING OUT OF A PARKING SPOT AT A BUSY RESTAURANT. I ATTEMPTED TO PULL FORWARD A FOOT OR TWO AND PARK BY PUTTING THE CAR INTO DRIVE (NOT PRESSING THE ACCELERATOR). UPON PRESSING THE BRAKE TO PARK THE CAR ACCELERATED FORWARD UNCONTROLLABLY (WITHOUT APPLICATION OF THE GAS PEDAL) CRASHING INTO THE CAR PARKED IN FRONT OF ME AND PUSHING THAT CAR INTO THE CAR DIRECTLY ACROSS THE PARKING LOT FROM IT. THE CAR DIRECTLY ACROSS THE PARKING LOT WAS PUSHED OVER THE CONCRETE PARKING BLOCK AND INTO A TREE. AFTER PUSHING THE CAR IN FRONT OF ME, I WAS ABLE TO STEER AWAY FROM OTHER CARS AND WAS FINALLY ABLE TO STOP THE CAR ONLY BY USING THE EMERGENCY BRAKE. FROM THE TIME THE CAR ACCELERATED FORWARD WITHOUT PRESSING THE GAS PEDAL THE BRAKES DID NOT WORK. AFTER CLEARING THE CARS I LOOKED DOWN TO MAKE SURE I WAS USING THE BRAKE PEDAL, WHICH I WAS, AND IT WAS NOT WORKING AT ALL. DURING THIS ENTIRE INCIDENT THERE WAS A VERY LOUD AND CONSISTENT NOISE COMING FROM MY CAR. THE CAR IS CURRENTLY BEING INSPECTED. *NM
Additional Summary:

Toyota ID No:
NHTSA ODI No: 10136882, 10142141
Date of Incident: 20050921
Vehicle: 2002 TOYOTA CAMRY
Location of Incident: TEANECK, NJ
NHTSA Summary:
I WAS MAKING A LEFT TURN INTO THE GARRISON PARKING LOT, TEANECK, DRIVING MY 2002 CAMRY. I PRESSED VERY LIGHTLY ON THE ACCELERATOR. THE CAR SUDDENLY HAD A SURGE OF ACCELERATION DISPROPORTIONATE TO MY GENTLE TAPPING OF THE GAS PEDAL. PRESSING THE BRAKE PEDAL AND ALSO TURNING THE IGNITION KEY OFF DID NOT SLOW THE CAR DOWN SUFFICIENTLY TO PREVENT A CRASH INTO TWO PARKED CARS. THERE WERE NO OCCUPANTS IN THE PARKED CAR. MY HUSBAND, DRIVING I

BOROWITZ, WAS WITH ME. WE HAD NO APPARENT INJURIES AT THAT TIME EXCEPT FOR LEFT SHOULDER ACHE (GRACE). WE WERE BOTH TRAUMATIZED. THE CAMRY IS AT A TOYOTA BODY SHOP, AWAITING INSPECTION BY TOYOTA REPRESENTATIVE TOM MORIN ON SEPT. 26. OUR ALLSTATE INSURANCE ADJUSTER ESTIMATED PARTIAL COST OF REPAIRS AT $7025. NO REPAIRS HAVE BEEN DONE YET. THE CAMRY HAS 3391 MILES. REFERRED TO YOU BY LEONARD BIRCHMAN (VOICE OF THE LUNDBYS CAR PURCHASED FEB. 26, 2003 AT PARKWAY TOYOTA, ENGLWOD CLIFFS, NJ. *NM SEE ODI 10141141. *DSY
Additional Summary:

Toyota ID No:
NHTSA ODI No: 10137867
Date of Incident: 20050912
Vehicle: 2002 TOYOTA CAMRY
Location of Incident: SOUTH JORDAN, UT
NHTSA Summary:
I WAS DRIVING WITH MY FAMILY SOUTH BOUND ON I-5 WHEN WE EXITED THE FREEWAY AND PULLED INTO THE TILLICUM CHEVRON STATION. THE CRUISE CONTROL WAS ON BUT DISENGAGED. I TURNED RIGHT INTO A PARKING SPOT AT A LOW RATE OF SPEED (5 TO 5 MPH). I WAS ALMOST AT A COMPLETE STOP AND HAD JUST ENOUGH TIME TO REALIZE THAT I COULD NOT STOP!! I COULD HEAR THE CAR'S ENGINE ROAR AND A MOMENT LATER FOUND THAT I HAD DRIVEN OVER A CONCRETE CURB, UP A TWO FOOT CONCRETE RETAINING WALL, AND THROUGH A CHAIN-LINK FENCE. I DON'T KNOW HOW A CAR COULD DO THIS! THE TOTAL SPACE FOR THIS TO HAPPEN WAS ONLY ABOUT 1 LINEAR FEET! I WAS NOT PUSHING THE ACCELERATOR! THERE WAS INDEED AN ACCELERATION SURGE IN MY 2002 CAMRY V6. THE CAR STOPPED, STRADDLING THE CONCRETE WALL. THE FRONT DRIVE WHEELS WERE OFF THE GROUND. I GOT OUT OF THE CAR AND ASKED THE MECHANIC (IN SHIRT IP THERE) THERE ANY RECALLS ON THE 2002 CAMRY. I SWEAR THIS IS THE VERY FIRST THING I SAID BECAUSE I KNEW THAT I DID NOT CAUSE THE ACCIDENT. THE ACCIDENT WAS CAUSED BY A DEFECT IN THE TOYOTA CAMRY. A TOW TRUCK REMOVED MY VEHICLE FROM THE REMAINING WALL. I THEN DROVE THE CAR DIRECTLY TO THE TITUS-WILL TOYOTA DEALERSHIP. THEY COULD NOT DUPLICATE THE PROBLEM WITH THE VEHICLE AND INDICATED IT WAS SAFE TO DRIVE. DAMAGE TO THE CAR INCLUDED THE FRONT BUMPER, SEVERAL MAJOR SCRATCHES, AND SEVERAL SMALL DENTS. I EXPLAINED THAT WE WERE VERY CONCERNED ABOUT SAFETY AND ASKED ABOUT RECALLS. THEY INDICATED THAT THERE WERE NONE FOR MY VEHICLE. THEY DID ADMIT AFTER SOME QUESTIONING THAT THEY WOULD NOT KNOW HOW MANY TIMES THIS HAS HAPPENED IN THE PAST DUE TO THE FACT THAT THE DEALERSHIPS DO NOT SHARE INFORMATION AND TOYOTA CORPORATE DOES NOT SHARE THIS INFORMATION WITH THE DEALERSHIPS. THE YOUNG LADY (EMPLOYEE) AT THE PAYMENT DESK VOLUNTEERED THAT SHE HAD ALSO HAD UNEXPECTED ACCELERATION WITH HER TOYOTA CAMRY. I REQUEST THAT A FORMAL INVESTIGATION BE LAUNCHED AND A RECALL PLACED FOR 2002 TOYOTA CAMRY'S. *SB
Additional Summary:

Toyota ID No:
NHTSA ODI No: 10137651
Date of Incident: 20050920
Vehicle: 2005 TOYOTA HIGHLANDER
Location of Incident: ELKRIDGE, MD
NHTSA Summary:
I HAVE A 2005 TOYOTA HIGHLANDER LIMITED W/V6 ENGINE. WHEN I ACCELERATE AT LOW SPEEDS, THEN TAKE MY FOOT OFF THE GAS AND THEN TRY TO ACCELERATE AGAIN, THERE IS A PROLONGED HESITATION BEFORE THE VEHICLE STARTS TO ACCELERATE.

THE SAME PROBLEM EXISTS WHEN YOU MAKE A TURN AND THEN TRY TO ACCELERATE AGAIN. THE OTHER DAY I WAS TRYING TO PULL OUT ONTO A WELL TRAVELED ROAD. I MOVED OUT INTO THE FIRST LANE AND THEN TOOK MY FOOT OFF THE GAS TO CHECK TO MAKE SURE THE NEXT LANE WAS CLEAR. I SAW THERE WERE CARS COMING AROUND THE CURVE TOWARDS ME IN BOTH LANES. I HIT THE GAS AND THE CAR HESITATED. THEN FINALLY IT STARTED TO MOVE. I BARELY MISSED BEING BROADSIDED. I'VE BEEN DRIVING FOR OVER THIRTY YEARS AND HAVE DRIVEN A NUMBER OF DIFFERENT VEHICLES. I HAVE NEVER EXPERIENCED THIS PROBLEM AND AM VERY CONCERNED FOR MY FAMILY'S SAFETY. I HAVE CONTACTED THE DEALER AND TOYOTA AND THEY SAY THIS IS NORMAL OPERATION. AS FAR AS I'M CONCERNED THIS IS ANYTHING BUT NORMAL AND NEEDS TO BE ADDRESSED. *NM
Additional Summary:

Toyota ID No:
NHTSA ODI No: 10129471
Date of Incident: 20050924
Vehicle: 2004 TOYOTA CAMRY
Location of Incident: EAST ALTON, IL
NHTSA Summary:
DT: THE CONTACT STATES THAT 2004 TOYOTA CAMRY XLE SUDDENLY ACCELERATED. THE CONTACT SLOWLY PULLED INTO GARAGE AND THE VEHICLE ACCELERATED AND HIT AN OBJECT IN THE GARAGE. THERE WAS NO DAMAGE TO THE CAR. THE CONTACT CALLED TOYOTA DEALERSHIP AND LET THEM KNOW. AND THEY SAID THEY HAD NOT HEARD OF A CAR DOING THAT. THE SPEED WAS 3 MPH.*AK
Additional Summary:

Toyota ID No:
NHTSA ODI No: 10136243
Date of Incident: 20050924
Vehicle: 2002 TOYOTA PRIUS
Location of Incident: SACRAMENTO, CA
NHTSA Summary:
I HAD JUST LEFT ONE AREA OF A PARKING LOT AND WAS TRAVELING TO ANOTHER AT A LOW RATE OF SPEED (5 TO 15 MPH) SO MY 2002 TOYOTA PRIUS WAS RUNNING UNDER ELECTRICAL POWER. I TURNED RIGHT TO PULL INTO A PARKING SPACE BETWEEN TWO SUVS, COASTING IN WITH MY FOOT OVER THE BREAK PEDAL. WHEN I WAS MORE THAN HALFWAY INTO THE PARKING SPACE, THE CAR SUDDENLY SHOT FORWARD JUMPING THE CURB AND STOPPING ONLY WHEN IT HIT A STONE PILLAR. WHEN I LOOKED DOWN (AFTER CHECKING TO SEE IF MY 13 YEAR OLD SON WAS ALRIGHT, I SAW THAT MY FOOT WAS ON THE BRAKE PEDAL. FORTUNATELY NO PEDESTRIAN WAS IN THE WALKWAY, AND I DID NOT HIT THE SUV TO MY RIGHT OR LEFT. HOWEVER, THE UNEXPECTED ACCELERATION WAS NOT A RESULT OF PRESSING ON THE GAS PEDAL. *JD
Additional Summary:

Toyota ID No:
NHTSA ODI No: 10139632
Date of Incident: 20050925
Vehicle: 2002 TOYOTA CAMRY
Location of Incident: VERGINA, NJ
NHTSA Summary:
BRAKES WERE UNABLE TO BRING CAR TO A STOP, INSTEAD THE CAR ACCELERATED. CAR FINALLY CAME TO A STOP AFTER CRASHING INTO THE HOUSE. CAR WAS DAMAGED AND

THE BODY AND FENDERS OF THE CAR WERE REPAIRED BUT NOTHING WAS REPAIRED WHICH LED TO THIS OCCURRENCE IN REGARDS TO THE MECHANICS OF THE CAR. IN ADDITION AIRBAGS DID NOT DEPLOY ON IMPACT.*JB
Additional Summary:

Toyota ID No:
NHTSA ODI No: 10130178
Date of Incident: 20051025
Vehicle: 2001 LEXUS ES300
Location of Incident: RIVERSIDE, CA
NHTSA Summary:
WHILE DRIVING THE CAR WOULD SPEED UP ON OWN WITHOUT PUSHING ON THE ACCELERATOR. I FOUND MY CAR GOING FROM 40 TO 60. IN PARK POSITION THE CAR WILL REV TO HIGH RPM BUT IF I AM IN DRIVE MODE IT WILL JUST ACCELERATE. I TOOK IT TO LEXUS AND THE TECHNICIAN SAYS THE IDLE SPEED CONTROL VALVE WAS NOT WORKING AND THE REPAIR WORK WOULD BE $300. *SM
Additional Summary:

Toyota ID No:
NHTSA ODI No: 10128513
Date of Incident: 20051016
Vehicle: 2005 TOYOTA TUNDRA
Location of Incident: ORANGE CITY, FL
NHTSA Summary:
WE OWN "TWO" 2005 TOYOTA TUNDRA DOUBLE CABS THAT ARE EQUIPPED THE SAME. BOTH OF THESE VEHICLES EXHIBIT THE SAME SAFTEY ISSUE THE ISSUE: WHEN DRIVING WITH CRUISE CONTROL "ON" AT SPEEDS OF 70 MPH ON SLIGHTLY UPHILL TRACK, THE CRUISE CONTROL WILL COMMAND THE VEHICLE TO MAXIMUM THROTTLE, SHIFTING THE TRANSMISSION INTO PASSING GEAR. THIS ACTION ON THE 3RD HORSEPOWER VEHICLE, CAUSES THE REAR TIRES TO BREAK LOOSE ON WET ROADS AND CAN CAUSE LOSS OF CONTROL OF THE VEHICLE, SENDING IT OFF THE ROAD OR INTO A SPIN. BOTH VEHICLES WE OWN EXHIBIT THIS BEHAVIOR AND IT HAS BEEN REPORTED TO TOYOTA DEALER. AND NOW 2005310166775. *SM
Additional Summary:

Toyota ID No:
NHTSA ODI No: 10140020
Date of Incident: 20051001
Vehicle: 2006 TOYOTA TUNDRA
Location of Incident: DELAND, FM
NHTSA Summary:
2006 TUNDRA 4 DOOR OVERSPEED WHEN DRIVING IN CRUISE CONTROL. WHEN DRIVING AT HIGHWAY SPEED WITH CRUISE CONTROL ON AND APPROACHING A SLIGHT INCLINE, THE VEHICLE WILL DROP INTO PASSING GEAR AND THE THROTTLE WILL GO TO FULL THROTTLE. THIS WILL CAUSE THE OPERATOR TO LOSE CONTROL OF THE VEHICLE, ESPECIALLY ON A RAIN SLICK ROAD. THIS HAS HAPPENED MANY TIMES, AND ALTHOUGH I AM AWARE THAT IT COULD HAPPEN, IT STILL STARTLES ME WHEN IT OCCURS. IF CLOSE BEHIND ANOTHER VEHICLE, THIS COULD LEAD TO AN REAR END ACCIDENT. THE NORMAL PROGRESSION SHOULD BE DROPPING OUT OF OVERDRIVE, WITH A GRADUAL ACCELERATION TO MAINTAIN SET SPEED, AND THEN BACK TO OVERDRIVE WHEN SET SPEED IS OBTAINED. DEALER CALLED TOYOTA AND THEY CLAIMED THIS IS NORMAL OPERATION. DOCUMENTED WITH TOYOTA DEALER. AND NOW

WITH NHTSA. WHEN ACCIDENT OCCURS AS A RESULT OF THIS OVERSPEED, HOPEFULLY TOYOTA WILL RESET THE COMPUTER CONTROL MODULE TO FIX PROBLEM. *JB
Additional Summary:

Toyota ID No:
NHTSA ODI No: 10144958
Date of Incident: 20051000
Vehicle: 2002 TOYOTA CAMRY
Location of Incident: CASSELBERRY, FL
NHTSA Summary:
PROBLEMS WITH 2002 TOYOTA CAMRY. AUGUST 2003 - DRIVING ALONG, HUSBAND BEGAN TO STOP SLOWLY TO PULL UP TO A LIGHT AND IT FELT LIKE IT WAS NOT BREAKING BUT CAR CONTINUED TO ACCELERATE SO HUSBAND LET OFF BRAKE AND REAPPLIED THE BRAKE AND IT FINALLY STOPPED THE SURGING. 2. WHILE GETTING GAS WE WERE DRIVING AROUND IT TO FIND AN PUMP. WE WERE PRESSING THE BRAKE AND CAR WAS TRYING TO ACCELERATE AGAINST THE BRAKE AS IF WAS APPLIED. LET OFF BRAKE AND REAPPLIED QUICKLY AND CAR STOPPED NORMALLY. JANUARY 2004 HUSBAND BEGAN TO PULL INTO A PARKING SPACE AND AS HE STARTED TO BRAKE AGAIN THE CAR WAS TRYING TO ACCELERATE AND SO HE LET OFF THE BRAKE, REAPPLIED IT (ALL VERY QUICKLY) AND WAS ABLE TO PARK BARELY MISSING HITTING VEHICLE BESIDE HIM. MARCH 27, 2004, WE TOOK OUR VEHICLE ONCE AGAIN TO DEALERSHIP STATING THE VEHICLE WAS SURGING WHILE DRIVING. OCTOBER 2004 ON A TRIP TO GATLINBURG, TENNESSEE- HUSBAND APPLIED THE BRAKES, CAR CONTINUED TO ACCELERATE-REAPPLIED THE BRAKES- SURGING/ACCELERATION STOPPED. OCTOBER 3, 2005 TRIP TO NORTH CAROLINA ON 7 SEPARATE OCCASIONS THE CAR ENGINE STARTED RACING AND THE CAR HAD TO BE PUT IN NEUTRAL AND THE BRAKE HELD TIGHTLY. ON ONE OCCASION AS WHILE ATTEMPTING TO STOP BEHIND A SCHOOL BUS FULL OF CHILDREN, ALMOST HIT THE BUS FROM BEHIND BECAUSE ACCELERATOR WENT TO FULL ACCELERATION AS WE APPLIED THE BRAKES. FORTUNATELY, MY HUSBAND PUT THE CAR IN NEUTRAL AND IT WAS REVVING AT FULL THROTTLE. HE HIT ACCELERATOR PEDAL AS WE WAS IN NEUTRAL, AND ACCELERATION WENT BACK TO IDLE SPEED. DECEMBER 3, 2005 WHILE IN WE WERE STOPPED IN A LINE OF TRAFFIC WAITING AT A LIGHT THE ENGINE ONCE AGAIN STARTED RACING. HAD TO PUT IT IN NEUTRAL, AND AGAIN IT REVVED AT FULL THROTTLE WHILE HOLDING BRAKE PEDAL DOWN TIGHTLY.=Y=/ ^^ OTHERWISE WOULD HAVE REAR ENDED CARS IN FRONT OF US. PUT CAR IN NEUTRAL, RELEASED BRAKE PEDAL AND THEN PRESSED DOWN ON THE ACCELERATOR- ENGINE SPEED WENT TO IDLE SPEED. *JB
Additional Summary:

Toyota ID No:
NHTSA ODI No: 10139528
Date of Incident: 20051000
Vehicle: 2002 LEXUS ES300
Location of Incident: RICHMOND, 00
NHTSA Summary:
MY 2002 LEXUS ES300 HAD A CASE OF SUDDEN UNINTENDED ACCELERATION THAT LED TO A CRASH CAUSING OVER $16,000 WORTH OF DAMAGES TO BOTH MY CAR AND THE OTHER PERSONS CAR. I HAVE SEEN OTHER REPORTS OF OTHER PEOPLE WONDERING IF THE ELECTRONIC THROTTLE IS SUSPECT IN THESE CASES, HOWEVER I PERSONALLY BELIEVE THAT THE REAL PROBLEM IS ONLY PARTLY TO BLAME ON THE ELECTRONIC THROTTLE. IN MY OPINION, THE PROBLEM IS THE LIKELIHOOD OF THE PEDAL GETTING STUCK UNDER FLOOR MATS IS TOO HIGH, COMBINED WITH THE RELATIVELY "LIGHT" SPRING FORCE ON THE GAS PEDAL. BECAUSE IT IS A THROTTLE-BY-WIRE SYSTEM WHICH

LEADS TO THE FLOOR MAT EASILY HOLDING THE PEDAL DOWN TO FULL THROTTLE CAUSING AN ACCIDENT. I BAY THAT THIS IS "NEGLIGENT PEDAL DESIGN ON THE PART OF THE CAR MANUFACTURER". I ALSO BELIEVE THAT THEY KNEW THIS WAS AN ISSUE BECAUSE THEY MADE REFERENCE TO THIS IN THE OWNERS MANUAL ON PGTS WHERE THERE IS A CAUTION THAT STATES "MAKE SURE THE FLOOR MAT IS PROPERLY PLACED ON THE FLOOR CARPET. IF THE FLOOR MAT SLIPS AND INTERFERES WITH THE MOVEMENT OF THE PEDALS DURING DRIVING, IT MAY CAUSE IN ACCIDENT." NO MANUFACTURER SHOULD BE ALLOWED TO USE THAT CAUTION AS A DISCLAIMER TO GET AWAY WITH NEGLIGENT PEDAL DESIGNS. THEY, FULLY WELL KNOWING THAT THIS IS A SAFETY ISSUE, SHOULD HAVE RECALLED THOSE CAR MODELS WITH A PEDAL DESIGN THAT HAD A HIGH RISK OF GETTING JAMMED AND REDESIGNED THE PEDAL SO THAT IT CANNOT GET STUCK BY A FLOOR MAT. IN ALL THE CARS THAT EVE OWNED IN THE PAST, IF A MAT SLIPS IT JUST PREVENTS YOU FROM APPLYING FULL GAS PEDAL, NOT THE OPPOSITE OF APPLYING FULL PEDAL. I STRONGLY MOVE THAT TOYOTA COMPANY RECALLS ALL THESE CARS WITH THIS POTENTIAL PROBLEM AND FIX IT PROPERLY BEFORE SOMEONE GET FATALLY INJURED OR CRIPPLED FOR LIFE. *NM
Additional Summary:

Toyota ID No:
NHTSA ODI No: 10129780
Date of Incident: 20051010
Vehicle: 2005 LEXUS ES
Location of Incident: FAIRBANKS, CA
NHTSA Summary:
DEPRESSING THE ACCELERATOR PEDAL CAUSES THE VEHICLE TO HESITATE FOR ONE-HALF TO ONE FULL SECOND AND THEN LURCH FORWARD SUDDENLY. THIS IS A SAFETY ISSUE WHEN CHANGING LANES OR ACCELERATING TO AVOID A COLLISION. THE DEALER'S MECHANIC INDICATED (TWICE) THAT THEY HAVE HAD PROBLEMS WITH THIS MODEL'S "ELECTRONIC ACCELERATOR," AND THAT AN INTERNAL COMPUTER IS SUPPOSED TO "LEARN FROM THE DRIVERS' HABITS AND ADJUST THE ACCELERATION ACCORDINGLY." AN ACCIDENT CAN EASILY OCCUR WHEN EXPECTED POWER IS DENIED UPON DEPRESSING THE ACCELERATOR. *NM
Additional Summary:

Toyota ID No:
NHTSA ODI No: 10145919
Date of Incident: 20051011
Vehicle: 2002 TOYOTA CAMRY
Location of Incident: MILWAUKEE, WI
NHTSA Summary:
DT: THE CONTACT STATED DUE TO THE DESIGN OF THE ACCELERATOR AND BRAKE PEDALTHEY WERE TOO CLOSE TOGETHER. AS A RESULT, THE VEHICLE CRASHED INTO A CEMENT BIRD BATH. THE POLICE WERE NOT NOTIFIED OF THIS INCIDENT. *AK
Additional Summary:

Toyota ID No:
NHTSA ODI No: 10145998
Date of Incident: 20051014
Vehicle: 2005 TOYOTA CAMRY
Location of Incident: ORLANDO, FL
NHTSA Summary:

DT: THE CONTACT STATED WHEN PLACING FOOT ON THE BRAKE PEDAL THE VEHICLE ACCELERATED. IT BECAME AIRBORNE AND DID NOT STOP UNTIL IT CRASHED INTO AN EMBANKMENT. BOTH THE DRIVER AND PASSENGER HAVE FRACTURED VERTEBRAE. A POLICE REPORT WAS TAKEN AT THE SCENE, AND THE VEHICLE WAS TOTALED. *AK
Additional Summary:

Toyota ID No:
NHTSA ODI No: 10129786
Date of Incident: 20051015
Vehicle: 2002 LEXUS ES300
Location of Incident: FALLS CHURCH, VA
NHTSA Summary:
MY 2002 LEXUS 3000 SUDDENLY ACCELERATED AS I WAS PULLING FORWARD INTO A PARKING SPACE AND CRASHED INTO A BUILDING. WHEN IT HAPPENED, MY FOOT WAS RESTING LIGHTLY ON THE BRAKE, PREPARING TO BRAKE TO A STOP, AND LETTING THE CAR IDLE INTO THE SPOT. I HAD A SIMILAR THING HAPPEN ABOUT 4 MONTHS AGO. *JB
Additional Summary:

Toyota ID No:
NHTSA ODI No: 10130404
Date of Incident: 20051020
Vehicle: 2007 TOYOTA 4RUNNER
Location of Incident: MAHOPAC, NY
NHTSA Summary:
CRUISE CONTROL GOES CRAZY ON HILLS. IT WAITS TOO LONG TO ACCELERATE AND THEN IT FLOORS THE GAS AND THE AUTO TRANSMISSION DOWNSHIFTS AT LEAST TWO GEARS AND RAISES THE ENGINE WAY PAST THE SPEED YOU WANT AND THEN IT FINALLY LETS UP AND THE SPEED DROPS TOO LOW AND EVERYTHING REPEATS. DANGEROUS AND ABSOLUTELY WORTHLESS! HAS BEEN HAPPENING EVER SINCE I PURCHASED THE CAR NEW IN 2005. *TB
Additional Summary:

Toyota ID No:
NHTSA ODI No: 10144922
Date of Incident: 20051022
Vehicle: 2002 TOYOTA CAMRY
Location of Incident: MIAMI LAKES, FL
NHTSA Summary:
I REMOVED THE CAR, AND I RELEASED THE BRAKE AND STARTED IN REVERSE. AFTER A FEW SECONDS, THE CAR SUDDENLY SPED UP TO ABOUT 45 MPH IN REVERSE. THE CAR WOULD NOT STOP EVEN AS I PRESSED THE BRAKE, AND IT THEN HIT TWO CARS. THAT'S WHEN IT STOPPED. I TRIED TO PUT THE CAR IN DRIVE TO GO BACK INTO THE PARKING SPACE, BUT IT JOLTED FORWARD AND SKIPPED TWO PARKING BUMPERS. AT THAT TIME, I HIT ANOTHER CAR. AT THAT POINT, I LEFT THE CAR ALONE SEEING AS THERE WAS SOMETHING CLEARLY WRONG. IN THE END, MY CAR SUSTAINED DAMAGED TO THE FRONT AND TO THE BACK TOTALING $16,111.68. THIS DOES NOT INCLUDE THE DAMAGE TO THE THREE OTHER CARS. THE TOTALS OF DAMAGE OF WHICH I AM NOT AWARE OF ALTHOUGH THEY ARE CLAIMING MY INSURANCE. I TOOK THE CAR TO A LOCAL TOYOTA DEALER HAVING CONDUCTED RESEARCH ON WHAT HAPPENED TO ME. I FOUND THAT THERE HAVE BEEN CLAIMS AGAINST TOYOTA FOR PROBLEMS WITH ELECTRONIC THROTTLE WHERE THERE IS A SUDDEN, INVOLUNTARY ACCELERATION. I SHOWED THE SERVICE DEPARTMENT ALL THE RESEARCH I HAD GATHERED FROM THE INTERNET. THE

DEALER CHECKED THE CAR'S COMPUTER, AND THEY CLAIMED THEY FOUND NOTHING WRONG WITH THE ELECTRONIC THROTTLE OR WITH THE CAR'S COMPUTER. THEY CLAIMED THAT AIR POCKETS BETWEEN THE ACCELERATION AND THE BRAKE CAUSED THE PROBLEM. AS A RESULT, THEY FIXED THE STRUCTURAL DAMAGE TO MY CAR, BUT THEY MAINTAINED THAT NOTHING WAS WRONG WITH THE ELECTRONIC COMPONENTS, SPECIFICALLY THE THROTTLE, OF THE CAR. *NM
Additional Summary:

Toyota ID No:
NHTSA ODI No: 10142558
Date of Incident: 20051105
Vehicle: 2005 TOYOTA CAMRY
Location of Incident: CHELSEA, MA
NHTSA Summary:
DT: THE CONTACT WAS PUTTING THE VEHICLE INTO PARK AND THE VEHICLE SUDDENLY ACCELERATED. IT WENT FROM 2 MPH TO BEING OUT OF CONTROL. THE VEHICLE SURGED AND CRASHED INTO A WOODEN RETAINING WALL. THE CONTACT WAS NOT INJURED IN THE CRASH. THERE WAS PROPERTY DAMAGE TO THE WALL. THE VEHICLE WAS NOT TOTALED. SHE CONTACTED THE MANUFACTURER, AND THEY SAID THEY WOULD INVESTIGATE THE INCIDENT. THERE HAS NOT BEEN ANY REPRESENTATIVE FROM THE MANUFACTURER IN TOUCH WITH THE CONTACT. A POLICE REPORT WAS TAKEN. *AK
Additional Summary:

Toyota ID No:
NHTSA ODI No: 10142957
Date of Incident: 20051107
Vehicle: 2005 TOYOTA CAMRY
Location of Incident: SACRAMENTO, CA
NHTSA Summary:
DT - CONTACT STATES VEHICLE SURGED FORWARD, LOST CONTROL, AND HIT ANOTHER VEHICLE. SHE DEPRESSED THE BRAKES, BUT THE VEHICLE WOULD NOT STOP. THERE WERE NO INJURIES, AND NO POLICE REPORT WAS TAKEN. THE DEALER INFORMED HER NO OTHER FAILURES OF THIS TYPE HAVE BEEN REPORTED. IT WAS THE OPINION OF THE MANUFACTURER THAT IT WAS DRIVER ERROR. *AK UPDATED 12/14/2005. THE VEHICLE WAS PARKED WHEN IT SUDDENLY ACCELERATED. *NM
Additional Summary:

Toyota ID No:
NHTSA ODI No: 10142865
Date of Incident: 20051110
Vehicle: 2004 TOYOTA CAMRY
Location of Incident: HARVEY, LA
NHTSA Summary:
I WAS PULLING INTO APARTMENT COMPLEX PARKING SPACE WHEN MY 2003 TOYOTA CAMRY SUDDENLY ACCELERATED AND SURGED FORWARD. I HAD MY FOOT ON THE BRAKE AND WAS HALF WAY IN THE SPOT WHEN THE CAR BEGAN TO SURGE FORWARD AND JUMPED OVER SIDEWAY FLOWING INTO APARTMENT BUILDING. I WAS PUSHING THE BRAKE ALL THE WAY TO THE FLOOR AND THE TIRES WERE SCREECHING, BUT THE CAR WOULD NOT STOP UNTIL IT HIT THE BUILDING WALL. THE CAR WILL BE TOWED TO THE DEALERSHIP TODAY FOR AN ESTIMATE. THERE WAS SEVERE DAMAGE TO THE APARTMENT BUILDING. *JB

Additional Summary:

Toyota ID No:
NHTSA ODI No: 10142635
Date of Incident: 20051111
Vehicle: 2004 TOYOTA HIGHLANDER
Location of Incident: BLOOMINGTON, IL
NHTSA Summary:
DT: THE CONTACT STATED WHILE PULLING INTO A PARKING SLOT HEARD A GRINDING NOISE FOLLOWED BY THE VEHICLE LUNGING INTO ANOTHER PARKED VEHICLE. HE TOOK THE VEHICLE TO THE DEALER. THE DEALER COULD NOT DUPLICATE THE SUDDEN ACCELERATION. THE DEALER REPLACED THE MASS AIR FLOW SENSOR, OXYGEN SENSOR, AND REPROGRAMMED THE ECU. THE DEALER COULD NOT DETERMINE WHAT CAUSED THIS PROBLEM. *AK
Additional Summary:

Toyota ID No:
NHTSA ODI No: 10142695
Date of Incident: 20051114
Vehicle: 2002 TOYOTA CAMRY
Location of Incident: BARNEGAT, NJ
NHTSA Summary:
DT: CONTACT STATES WHILE HIS CAR WAS PARKED, HE PUT HIS FOOT ON THE BRAKE IN ORDER TO SHIFT IT INTO DRIVE AND THE CAR ACCELERATED CAUSING THE VEHICLE TO GO ACROSS TWO SIDEWALKS AND A HOSPITAL LAWN AND INTO TWO TREES. HE REPORTS HAVING NO PROBLEMS WITH THE CAR PRIOR TO THIS INCIDENT. *JB UPDATED 12/7/2005 - *NM
Additional Summary:

Toyota ID No:
NHTSA ODI No: 10144340
Date of Incident: 20051125
Vehicle: 2004 TOYOTA HIGHLANDER
Location of Incident: DALLAS, TX
NHTSA Summary:
DT: THE CONTACT STATED THERE WAS A PROBLEM WITH SUDDEN ACCELERATION, WHILE SHIFTING INTO REVERSE THE VEHICLE SUDDENLY ACCELERATED ON JULY 8, 2005. THE PROBLEM DID NOT REAPPEAR UNTIL NOVEMBER 22, 2005. THE VEHICLE ACCELERATED UNDER THE SAME CONDITIONS. HE WAS ABLE TO STOP THE VEHICLE AFTER IT HAD GONE THROUGH TWO FENCES AND CRASHED INTO THE CORNER OF THE NEIGHBORS GARAGE. THE VEHICLE IS CURRENTLY AT THE DEALERSHIP FOR DIAGNOSTICS.*AK UPDATED 12/27/05. *JB
Additional Summary:

Toyota ID No:
NHTSA ODI No: 10159724
Date of Incident: 20051202
Vehicle: 2004 LEXUS RX300/H
Location of Incident: SCARSDALE, NY
NHTSA Summary:

07*: THE CONTACT STATED WHILE ATTEMPTING TO APPLY BRAKE PRESSURE AT 10 MPH THE VEHICLE ACCELERATED. THIS OCCURRED ON DRY ROADS DURING NORMAL BRAKING WITHOUT WARNING. THE VEHICLE WAS TAKEN TO THE DEALERSHIP FOR INSPECTION. UPON INSPECTION, THEY WERE UNABLE TO DUPLICATE THE PROBLEM AND NO REPAIRS WERE MADE. THE MANUFACTURER WAS ALERTED.
Additional Summary:

Toyota ID No:
NHTSA ODI No: 10146992
Date of Incident: 20051206
Vehicle: 2003 TOYOTA CAMRY
Location of Incident: RALEIGH, NC
NHTSA Summary:
I HAD NEW CAR BATTERY INSTALLED BY LOCAL TOYOTA DEALERSHIP LATE ON 12/2/05. THE CAR SEEMED TO SHIFT AND SOUND MARKEDLY DIFFERENTLY AFTER DRIVING THE CAR OFF THE LOT WITH THE NEW BATTERY. THREE DAYS LATER MY 4 CYLINDER, AUTOMATIC 2003 4D-S TOYOTA CAMRY WAS LEFT IN "D" WITH THE OVERDRIVE BUTTON REMAINED ENGAGED. MY FOOT WAS ON THE BRAKE PEDAL. I DID NOT DRIVE. I'D BEEN STOPPED FOR A WHILE AT A "T" INTERSECTION FOR A WHILE AND NOT MOVING; NOR WERE ANY OTHER VEHICLES MOVING. THIS PARTICULAR INTERSECTION IS CONTROLLED BY A LONG SIGNAL LIGHT. I WAS AIMED STRAIGHT AHEAD, BUT WAS THE THIRD CAR BACK FROM THE STOP LINE. SIGNALING TO TURN LEFT. ALL OF A SUDDEN I HEARD WHAT SOUNDED LIKE AN AIRPLANE ENGINE ROARING, GETTING EVER LOUDER. MY FOOT WAS STILL ON THE BRAKE. THE ENGINE RACED, SURGED ABRUPTLY CAUSED MY CAR TO ACCELERATE FORCEFULLY INTO THE STOPPED CAR IN FRONT OF ME. THE CAR IN FRONT OF ME WAS PUSHED INTO AN SUV IN FRONT OF IT. THE FORCE OF IMPACT CAUSED MY ENGINE TO SHUT DOWN. THE DRIVER IN FRONT OF ME APPEARED TO HAVE A WHIPLASH INJURY. ALL TOLD, THERE WAS ABOUT $1500.00 WORTH OF DAMAGE TO MY CAR AND IT WAS ESTIMATED THE SMALLER AND OLDER CAR IN FRONT OF ME SUSTAINED ABOUT $2500.00 WORTH OF DAMAGE. I HAD THE CAR TOWED TO THE DEALER. THE LOCAL TOYOTA DEALER INFORMED ME THEY FOUND NOTHING WRONG WITH THE CAR." THE CAR WAS THEN TOWED TO A SHOP FOR BODY REPAIRS. UPON THE RETURN OF MY CAMRY, IT STILL HAD A BIT OF A VIBRATORY AND AUDITORY DISTORTION THAT WAS ATYPICAL FOR THE 3 PREVIOUS YEARS. I ALSO REALIZED THAT THE BRAKES WERE BARELY WORKING. AT A RETURN VISIT TO THE DEALER, I WAS TOLD MY BRAKES WERE ALMOST "COMPLETELY GONE" AND THAT I NEEDED NEW BRAKES. HOWEVER, I AM CERTAIN THAT THE MARKED AND SUDDEN DECLINE IN MY BRAKE FUNCTION WAS A RESULT OF THE BRAKES ATTEMPTING TO HOLD MY CAR BACK AS THE ENGINE SURGED FORWARD. *JB
Additional Summary:

Toyota ID No:
NHTSA ODI No: 10145642
Date of Incident: 20051212
Vehicle: 2004 TOYOTA CAMRY
Location of Incident: PHILADELPHIA, PA
NHTSA Summary:
DT: THE CONTACT STATED THE ACCELERATOR PEDAL WAS STUCK. SHE WAS PULLING OUT ONTO THE ROAD. AS SHE LIGHTLY PRESSED THE ACCELERATOR PEDAL THE VEHICLE WENT ACROSS THE ROAD AND CRASHED INTO A METAL POLE. THE FRONT END OF THE VEHICLE WAS PUSHED UNDERNEATH THE WINDSHIELD. THE CONTACT WAS WEARING THE SEAT BELT. THE AIR BAGS DEPLOYED. HOWEVER, SHE WAS TAKEN TO THE HOSPITAL WITH CHEST PAINS AND BRUISING. THE VEHICLE WAS TOWED TO A

REPAIR SHOP FOR INSPECTION. A REPRESENTATIVE FROM THE MANUFACTURER WAS COMING TO THE REPAIR SHOP TO DETERMINE THE CAUSE OF THE INCIDENT. NO REPAIRS HAVE BEEN MADE. A POLICE REPORT WAS TAKEN AT THE SCENE OF THE ACCIDENT. *AK
Additional Summary:

Toyota ID No:
NHTSA ODI No: 10213267
Date of Incident: 20051215
Vehicle: 2004 TOYOTA TACOMA
Location of Incident: SAINT SIMONS ISLAND, GA
NHTSA Summary:
TL* THE CONTACT OWNS A 2004 TOYOTA TACOMA. WHILE DRIVING AT VARIOUS SPEEDS, THE VEHICLE WOULD DRAMATICALLY ACCELERATE WITHOUT WARNING. ALSO, WHEN APPLYING PRESSURE TO THE ACCELERATOR PEDAL, THE VEHICLE WOULD NOT ACCELERATE UNLESS THE PEDAL WAS COMPLETELY DEPRESSED TO THE FLOOR. THE DEALER STATED THAT THE MASS AIR SENSOR WAS CAUSING THE FAILURE. THE DEALER CLEANED THE SENSOR. THE CONTACT RETURNED TO THE DEALER A WEEK LATER AND THEY STATED THAT THE CATALYTIC CONVERTER WAS MELTED AND WAS THE CAUSE OF THE FAILURE. AFTER CAREFUL INSPECTION, IT WAS DETERMINED THAT THE CONVERTER WAS NOT MELTED. A PROFESSIONAL MECHANIC STATED THAT THE SUPERCHARGER FOR THE ACCELERATOR PEDAL POSITIONING SENSOR WAS CAUSING THE FAILURE. THE FAILURE MILEAGE WAS 9,000 AND CURRENT MILEAGE WAS 17,000.
Additional Summary:

Toyota ID No:
NHTSA ODI No: 10147698
Date of Incident: 20051222
Vehicle: 2003 TOYOTA COROLLA
Location of Incident: WATERTOWN, MA
NHTSA Summary:
WHEN PARKING THE CAR THE CAR ATTEMPTED TO ACCELERATE ON ITS OWN. I LOOKED DOWN TO MAKE SURE MY FOOT WAS NOT ON THE GAS - MY FOOT WAS PLANTED ON THE BRAKE. I HAD TO BRAKE AS HARD AS A I COULD TO KEEP THE CAR FROM REAR ENDING THE VEHICLE IN FRONT AS THE ENGINE ALL ON ITS OWN DRAGGED THE CAR FORWARD. THE CAR WAS MOVING AT ABOUT TWO MILES AN HOUR WHEN THIS TOOK PLACE. THE ENGINE REVVED UP TO 4000 RPMS WITHOUT ANY PRESSURE ON THE GAS AND SIMPLY DRAGGED THE CAR FOR WARDS. *JB
Additional Summary:

Toyota ID No:
NHTSA ODI No: 10147312
Date of Incident: 20051223
Vehicle: 2004 LEXUS ES300
Location of Incident: SAN DIEGO, CA
NHTSA Summary:
THE ACCELERATOR BY MY 2004 LEXUS ES 330 STUCK IN A CROWDED PARKING LOT AND CAUSED A COLLISION. *NM
Additional Summary:

Toyota ID No:
NHTSA ODI No: 10148315

Date of Incident: 20051237
Vehicle: 2005 TOYOTA CAMEY
Location of Incident: GODFREY, IL
NHTSA Summary:
DT*: THE CONTACT STATED WHILE ATTEMPTING TO PULL IN A PARKING SPACE AT 3 MPH, THE VEHICLE SURGED AND SUDDENLY ACCELERATED WITHOUT WARNING. THE BRAKE PEDAL WAS DEPRESSED AT THE TIME OF THE INCIDENT. THE VEHICLE WENT THROUGH AN INTERSECTION AND OVER A PUBLIC SIDEWALK BEFORE CRASHING INTO A FIRE HYDRANT. THE CONTACT AND PASSENGER WERE WEARING SAFETY RESTRAINTS. THE VEHICLE IMPACTED THE FIRE HYDRANT WITH SUCH FORCE THAT THE FIRE HYDRANT WAS EXTRACTED 3 FEET ABOVE GROUND. THE VEHICLE WAS TOWED TO THE LOCAL DEALERSHIP WERE DIAGNOSTIC TESTING WAS PERFORMED. THE LOCAL SERVICE DEALER COULD NOT DETERMINE THE CAUSE OF THE ACCIDENT; HOWEVER THE DEALER ADDITIONAL TESTING WILL BE PERFORMED BEFORE THE VEHICLE IS REPAIRED. THE POLICE FILED A REPORT AT THE SCENE AND THE CONTACTS INSURANCE COMPANY ALSO FILED A REPORT. THERE WAS ADDITIONAL PROPERTY DAMAGE TO THE SIDEWALK, FIRE HYDRANT AND A CHILDREN'S MURALTM THAT WAS FLOODED BY THE WATER FROM THE FIRE HYDRANT. *SM UPDATED 2/27/2006 - THE AIR BAGS ALSO FAILED TO DEPLOY. *NM
Additional Summary:

Toyota ID No:
NHTSA ODI No: 10146714
Date of Incident: 20051219
Vehicle: 2004 TOYOTA TACOMA
Location of Incident: SARATOGA, CA
NHTSA Summary:
AFTER SHIFTING FROM SECOND GEAR TO THIRD GEAR, THE GAS PEDAL STOPPED WORKING COMPLETELY. SECONDS LATER IT FUNCTIONED NORMALLY, AND AS IF NOTHING HAD HAPPENED. THIS HAS HAPPENED BEFORE, AND I HAVE IDENTIFIED THE PROBLEM AS A FAILURE OF THE THROTTLE BODY MOTOR/SENSOR. I WILL BE ASKING THE TOYOTA DEALERSHIP TO FIX THE PART. *JB
Additional Summary:

Toyota ID No:
NHTSA ODI No: 10146664; 10146657
Date of Incident: 20051230
Vehicle: 2004 TOYOTA TACOMA
Location of Incident: DOTHAN, AL
NHTSA Summary:
2004 TOYOTA TACOMA 4X4 WITH 2.4L ENGINE AND MANUAL TRANS. HAVING THROTTLE BODY ISSUES. THE ACCELERATOR POSITION SENSOR IS FAILING CAUSING THE TRUCK TO STALL FOR A SECOND AND THEN JERK BACK UP. TRUCK DOES NOT THROW A CHECK ENGINE CODE WHEN THIS OCCURS, SO DEALER HAS INFORMED ME ON DIFFERENT OCCASIONS THAT NOTHING IS WRONG. I WAS ALMOST RAN OVER THE OTHER DAY TRYING TO PULL OUT INTO TRAFFIC WHEN THE THROTTLE BODY FAILED. THIS IS A SAFETY CONCERN AND TOYOTA NEEDS TO ADDRESS IT IMMEDIATELY!!!!!!! WHAT'S IT GOING TO TAKE, SOMEONE GETTING SERIOUSLY INJURED OR A HEALTHY LOW SUIT FOR TOYOTA TO TAKE ACTION? *JB; I HAVE A 2004 TOYOTA TACOMA 4X4 WITH A 2.4 LITER V4. I HAVE ALREADY FILED 1 COMPLAINT BUTT IN FRUSTRATION WILL TRY THIS AGAIN. THE ELECTRONIC THROTTLE BODIES THAT COME ON 2003 AND 2004 TOYOTA TACOMAS ARE FLAWED AND NEED TO BE INVESTIGATED AND RECALLED DUE TO SAFETY CONCERNS. THE PROBLEM IS THAT THE ACCELERATOR POSITION SENSORS ON THESE THROTTLE

BODIES ARE GOING OUT, CAUSING THE ACCELERATOR TO BECOME USELESS UNLESS DEPRESSED GREATER THAN 40%. I HAVE ALL MOST BEEN IN 2 ACCIDENTS WHILE PULLING OUT INTO TRAFFIC AND HAVING THIS OCCUR. WHEN THE SENSOR FAILS THE THROTTLE VALVE CLOSES LEAVING THE PERSON DRIVING THE VEHICLE WITHOUT ENOUGH ACCELERATION TO GET OUT OF THE WAY OF ON COMING TRAFFIC. IN VEHICLES WITH MANUAL TRANSMISSION IT IS ESPECIALLY DANGEROUS WHEN ON AN INCLINE (VERY DIFFICULT NOT TO ROLE BACKWARDS AND HIT SOMETHING BEHIND YOU). ALSO, NO CHECK ENGINE LIGHT HAS CAME ON WHEN THIS HAS OCCURRED. I HAVE READ HUNDREDS OF LETTERS ON THE INTERNET FROM PEOPLE HAVING THE SAME PROBLEM IN IT GOING TO TAKE SOMEONE GETTING KILLED OR A HEALTHY LAW SUIT TO MAKE TOYOTA TAKE ACTION? *NM
Additional Summary:

Toyota ID No:
NHTSA ODI No: 10147122
Date of Incident: 20060104
Vehicle: 2003 TOYOTA CAMRY
Location of Incident: LA CONNER, WA
NHTSA Summary:
DT*: THE CONTACT STATED THE VEHICLE SURGES FORWARD WHILE THE ACCELERATOR PEDAL IS RARELY BEING TOUCHED. THIS IS AN INTERMITTENT PROBLEM AND OCCURS WHEN THE VEHICLE IS ACCELERATING FROM A STOPPED POSITION. THE DEALERSHIP IS UNABLE TO DUPLICATE THE PROBLEM. *AK; THE CONSUMER STATED WHEN ON A LEVEL HIGHWAY, WITH THE CRUISE CONTROL ENGAGED,IT WILL ACTIVATE AND DEACTIVATE ON ITS OWN. UPDATED 02/07/06. *JB
Additional Summary:

Toyota ID No:
NHTSA ODI No: 10146266
Date of Incident: 20060108
Vehicle: 2006 TOYOTA RAV4
Location of Incident: CUMMING, GA
NHTSA Summary:
THERE IS A PROBLEM IN ACCELERATION DELAY/THROTTLE LAG IN THE 2006 TOYOTA RAV4. AFTER TAKING DELIVERY JAN 06 AND WHILE DRIVING 12K MILES, WE HAVE EXPERIENCED ERRATIC ACCELERATION PROBLEMS FROM COMPLETE STOPS OR ROLLING STARTS, WHEN TURNING CORNERS IN EITHER DIRECTION, ON UPHILL GRADES, OR ATTEMPTED PASSING. THERE IS A SIGNIFICANT DELAY IN DELIVERING FORWARD SPEED REGARDLESS OF HOW MUCH PRESSURE IS PUT ON THE FOOTPEDD. AFTER THE DELAY, FORWARD SPEED IS DELIVERED SUDDENLY, CAUSING THE CAR TO LURCH FORWARD AND THE ENGINE TO RACE. THE FORWARD SPEED LAGS CONTINUOUSLY UP HILLS, DEPENDING ON THE GRADE. UNDER THESE CONDITIONS, EVERYDAY DRIVING IS HAZARDOUS AND I HAVE HAD MANY CLOSE CALLS. THE TOYOTA DEALER DISMISSED OUR INITIAL COMPLAINTS, STATING THAT THIS PROBLEM WAS NORMAL, AND WE PUT UP WITH THIS FOR TOO LONG BEFORE INSISTING THE VEHICLE BE CHECKED OUT. THE DEALER SAID NO ERROR CODES WERE GENERATED AND NO TIRES HAD BEEN ISSUED AND THAT THEY WOULD HAVE TO BE ABLE TO DUPLICATE THE PROBLEM IN ORDER TO FIX IT, AS THOUGH WE ARE THE ONLY PEOPLE WITH THIS COMPLAINT. AFTER SOME PERSISTENCE ON OUR PART, THEY GAVE THE IMPRESSION THAT THEY'RE WELL AWARE OF A PROBLEM, BUT SEEM TO BE STONE WALLING WHILE LAYING THE BLAME ON TOYOTA TO ISSUE A FIX. THIS IS A VERY DANGEROUS FAULT IN THE NEW RAV4. MY ONLINE RESEARCH HAS NOW REVEALED THAT THERE ARE NUMEROUS COMPLAINTS OF THIS SAME PROBLEM ON CONSUMER WEBSITES SUCH AS TOYOTA NATION AND EDMUNDS. FOR TOYOTA DEALERS

TO PRETEND THIS IS AN ISOLATED, INSIGNIFICANT PROBLEM IS, AT THE VERY LEAST, DECEPTIVE AND MAY PROVE TO BE CRIMINAL, AS THIS ACCELERATION PROBLEM COULD WELL LEAD TO AN ACCIDENT. TOYOTA MUST FIX THIS PROBLEM ASAP. *JB
Additional Summary:

Toyota ID No:
NHTSA ODI No: 10155459
Date of Incident: 20060109
Vehicle: 2004 TOYOTA CAMRY
Location of Incident: BROOKFIELD, WI
NHTSA Summary:
I TERMINATED A LEASE ON A 2004 TOYOTA CAMRY ON FEB. 28. I ONLY DROVE IT FROM NOV. 1 TO JAN. 9 WHEN FOR THE THIRD TIME IN THOSE TWO MONTHS IT SURGED AHEAD WHEN I WAS PARKING. THE SURGE WAS SO POWERFUL, THAT THE CAR FLEW THRU THE AIR AND DAMAGED ANOTHER CAR IN THE PARKING LOT. MY FOOT WAS ON THE BRAKE. THE CAR SUFFERED $4000 WORTH OF DAMAGES. I CONTACTED THE DEALER TO SAY I WOULD HAVE THE DAMAGED CAR TOWED TO THEIR SHOP AND THEY SAID THE BODY HAD TO BE REPAIRED BEFORE THEY WOULD CHECK TO SEE WHY IT MALFUNCTIONED. I WAS TOLD THAT A REGIONAL ENGINEER FROM TOYOTA WOULD INSPECT THE CAR. I HAD GREAT HOPES THAT THEY WOULD FIND THE PROBLEM AND FIX IT BUT THE REPORT SAID THERE WAS NOTHING WRONG WITH THE CAR. OF COURSE THERE IS SOMETHING VERY WRONG WHEN THE CAR WILL NOT STOP BUT RATHER SURGES AHEAD WHEN YOU ARE BRAKING. THEY IMPLIED THAT AFTER 45 YEARS OF ACCIDENT FREE DRIVING, I PUT MY FOOT ON THE ACCELERATOR INSTEAD OF THE BRAKE. I TERMINATED THE LEASE BUT I AM VERY FEARFUL AND VERY PERPLEXED THAT TOYOTA IS UNCONCERNED ABOUT THE SAFETY OF THEIR CARS. TOYOTA MUST ADDRESS THIS PROBLEM--IT IS VERY WRONG TO IGNORE THIS SAFETY HAZARD. I AM FILING THIS COMPLAINT ABOUT A CAR I NO LONGER HAVE BECAUSE IT HAS BEEN SOLD TO AN UNSUSPECTING PERSON. THE NEW OWNER WAS NOT TOLD OF THE PROBLEM BECAUSE THEY SAY THERE IS NO PROBLEM. I DON'T KNOW HOW TO CONTACT THE NEW OWNER. I THOUGHT THE DEALER WOULD DO THE RIGHT THING AND SEND THE CAR BACK TO THE FACTORY TO BE FIXED. *NM
Additional Summary:

Toyota ID No:
NHTSA ODI No: 10148247
Date of Incident: 20050115
Vehicle: 2005 TOYOTA CAMRY SOLARA
Location of Incident: DUBLIN, OH
NHTSA Summary:
DT*: THE CONTACT STATED WHILE IN A PARKING LOT THE VEHICLE SUDDENLY ACCELERATED CRASHING INTO A CURB. THE PASSENGER SIDE RIM, SUSPENSION, WHEEL ASSEMBLY AND TIRE WERE DAMAGED AS A RESULT OF THE ACCIDENT. THE VEHICLE WAS TOWED TO A BODY SHOP WHERE NO REPAIRS HAVE BEEN MADE.
Additional Summary:

Toyota ID No:
NHTSA ODI No: 10149242
Date of Incident: 20060130
Vehicle: 2005 LEXUS ES330
Location of Incident: RESEDA, CA
NHTSA Summary:

DT*: THE CONTACT STATED WHILE APPLYING PRESSURE TO THE ACCELERATOR PEDAL TO BACK UP, THE VEHICLE HESITATED AND THEN LURCHED FORWARD CAUSING THE VEHICLE TO HIT THE GARAGE DOOR. THE DRIVER WAS WEARING A SEATBELT AND RECEIVED NO INJURIES. THE VEHICLE WAS TAKEN TO THE DEALERSHIP FOR INSPECTION AND THE PROBLEM COULD NOT BE DUPLICATED. THE MANUFACTURER WAS NOTIFIED.
Additional Summary:

Toyota ID No:
NHTSA ODI No: 10148800
Date of Incident: 20060121
Vehicle: 2003 TOYOTA CAMRY
Location of Incident: WOODSIDE, NY
NHTSA Summary:
MY CAR IS A 2003 TOYOTA CAMRY LE WITH 4 CYLINDER ENGINE, AUTOMATIC TRANSMISSION, CRUISE CONTROL AND ABS. THE ACCIDENT OCCURRED ON JANUARY 21, 2006 IN NEW YORK CITY IN BROAD DAYLIGHT AND IN CLEAR WEATHER. THE ACCIDENT OCCURRED AS I INTERED GAS STATION TO PUMP GAS. I LOST CONTROL WITH SUDDEN ACCELERATION. I HIT ANOTHER CAR PARKED TO PUMP GAS. *JB
Additional Summary:

Toyota ID No:
NHTSA ODI No: 10146088; 10147329
Date of Incident: 20060124
Vehicle: 2002 TOYOTA CAMRY
Location of Incident: LINCOLN, RI
NHTSA Summary:
CAR ACCELERATED WITHOUT DRIVER INPUT ON TWO SEPARATE OCCASIONS. THE LAST EVENT RESULTED IN SMASHING THROUGH A PLATE GLASS WINDOW OF A TRAVEL AGENCY, INJURING ONE EMPLOYEE. THE CAR ENDED UP TOTALLY IN THE AGENCY, HALTED BY AN INTERIOR WALL. THE POLICE REPORTED SKID MARKS ON THE SIDEWALK IN FRONT OF THE AGENCY, AS WELL AS WITHIN THE AGENCY AS I ATTEMPTED TO BRAKE THE CAR. THERE IS ALSO EVIDENCE THAT THE RIGHT FRONT TIRE WAS ROTATING VERY RAPIDLY, SO MUCH SO THAT WHEN THE CAR STOPPED THE TIRE BURNED A HOLE IN THE CARPET. CARPET THREADS ARE EMBEDDED IN THE RIGHT FRONT WHEEL TIRE, ON THE UNE HAND. THE MARKS ON THE CARPET AND SIDEWALK INDICATE THAT SKID MARKS WERE MADE BY ALL THREE WHEELS, WHILE THE RIGHT FRONT WHEEL OBVIOUSLY WAS BURNING RUBBER. *SB UPDATED 03/01/06; RESPONSE TO LETTER RECEIVED FROM CLAIMS ADMINISTRATOR, FOR TOYOTA, ALLEGING THAT ALL SYSTEMS WERE FUNCTIONING PROPERLY FOR 2002 TOYOTA CAMRY. *TR THE MANUFACTURER CLAIMED THAT ALL SYSTEMS WERE FUNCTION PROPERLY WHEN THE CONSUMER'S VEHICLE SUDDENLY ACCELERATED AND ENDED UP INSIDE A TRAVEL AGENCY. *NM
Additional Summary:

Toyota ID No:
NHTSA ODI No: 10154638
Date of Incident: 20060208
Vehicle: 2004 TOYOTA AVALON
Location of Incident: IN ORAL, PARK, NY
NHTSA Summary:
DT*: THE CONTACT STATED WHILE BACKING OUT OF A PARKING SPACE THE VEHICLE ACCELERATED WITHOUT WARNING. AS A RESULT, TWO OTHER VEHICLES WERE DAMAGED. HOWEVER, NO INJURIES WERE SUSTAINED. A POLICE REPORT WAS TAKEN

AT THE SCENE. THE VEHICLE WAS TOWED TO AN INDEPENDENT REPAIR SHOP AND THEN TAKEN TO THE DEALER. THE DEALER WAS UNABLE TO DUPLICATE THE PROBLEM. THE MANUFACTURER WAS CONTACTED. REPAIRS TO THE REAR END TOTALED $7044.06 PLUS SALES TAX
Additional Summary:

Toyota ID No:
NHTSA ODI No:
Date of Incident: 20060218
Vehicle: 2006 TOYOTA CAMRY XLE
Location of Incident: VICTORIA, TX
NHTSA Summary:
As of Monday my wife was involved in a sudden acceleration incident in the Wal-Mart parking lot here in Victoria, Texas.
• She finished shopping.
• Walked to the car
• Placed the key in the ignition and started the car up.
• Placed her foot on the brake (first time for us brake to shift into reverse)
• Placed the car in reverse and lifted her foot slightly on the brake to back up.
• The ground was level so no need for her to touch the accelerator pedal
• With her foot lightly on the brake, the engine took off
• Although she was attempting to break the car, it quickly smashed the next isle of parked vehicles.
• The first vehicle was a 1500 series chevy truck.
• The chevy truck (light in the back) rolled around and struck 2 other vehicles.
I believe that my wife had her foot on the brake pedal since there were NO skid marks. If she had not been attempting to brake, and instead pushing on the accelerator, there would have been skid marks from the front
tires while pushing the truck around.
Our car has $5,000 damage to the trunk and rear quarter panels. We are waiting for Toyota to do a formal "inspection". However, from what I have read I doubt that they will actually find anything. Our vehicle has 6,100 mileage and had no symptoms of anything wrong before the accident.
We were very luckily nobody was injured, this is a very busy Wal-Mart since Victoria's K-mart closed down a couple years back (population 60,000).
Bottom line, I don't think Toyota has owned up to a having a sudden acceleration problem and since they have no problem there oft a need for a fix. Sincerely, Edward A Fachinger Jr.
Additional Summary:

Toyota ID No:
NHTSA ODI No: 10151122
Date of Incident: 20060220
Vehicle: 2004 TOYOTA TACOMA
Location of Incident: CARLSBAD, CA
NHTSA Summary:
2004 TOYOTA TACOMA VIN: 5TEWN72N24Z375748 ELECTRONIC THROTTLE CONTROL SYSTEM (ETCS). ON 26 FEB 2005, 14 APR 2005, 17 APR 2005 AND 20 FEB 2005 AFTER PROLONGED DRIVING AT HIGHWAY SPEEDS WHEN STEPPING OFF THE GAS PEDAL TO MAKE A STOP THE ENGINE SPEED WOULD NOT DECREASE AND I WOULD HAVE TO APPLY BOTH FEET TO THE BRAKE PEDAL TO TRY TO SLOW DOWN, AND SWERVE TO THE SIDE TO AVOID HITTING VEHICLES IN FRONT OF ME. AFTER APPROXIMATELY 5-10 SECONDS THE ENGINE SPEED WOULD SUDDENLY DECREASE AND I COULD REGAIN CONTROL. WHILE STRUGGLING TO KEEP CONTROL DID NOT SHIFT FROM DRIVE TO NEUTRAL. IN EACH INSTANCE NO WARNING LIGHTS. BEFORE THESE 4 EVENTS OCCURRED THE ENGINE SUFFERED A CATASTROPHIC FAILURE ON 11 APR 2004 WITH ONLY 1,111 MILES. TOYOTA

OF CARSON CITY NEVADA EFFECTED THE REPAIRS TO THE CATASTROPHIC ENGINE FAILURE BY REPLACING THE LOWER BLOCK AND THE CYLINDER HEADS AMONG OTHER COMPONENTS. I TOOK THE CAR TO TOYOTA OF CARLSBAD, CALIFORNIA ON 1 MAR 2005, 20 APR 2005, 5 MAY 2005 AND 23 FEB 2006 FOR THE SPEED CONTROL PROBLEM BUT THEY COULD NOT DUPLICATE IT AND WOULD NOT REPLACE ANY COMPONENTS. APPARENTLY THE COMPUTER DID NOT REGISTER/STORE ANY DIAGNOSTIC FAILURE CODES. I KNOW BY HAVING READ THE TOYOTA SERVICE MANUAL THAT THE ELECTRONIC CONTROL MODULE DOES NOT RECORD ALL FAILURES. I CANNOT TELL IF THIS PROBLEM WAS PRESENT WHEN THE CAR WAS BUILT OR WHETHER IT WAS INDUCED BY REPAIRS FOR THE CATASTROPHIC ENGINE FAILURE. WHAT I DO KNOW IS THAT I HAVE A SERIOUS SAFETY ISSUE. I AM VERY CONCERNED ABOUT NOT BEING ABLE TO AVOID HITTING A PEDESTRIAN OR ANOTHER VEHICLE. I HAVE EXHAUSTED ALL CONSUMER SUPPORT AVENUES WITH TOYOTA. REFERENCE NUMBER 20060224417 WITH D.OISS. TOYOTA CUSTOMER SUPPORT 1-800-731-4111 TODAY 24 FEB 2006 INDICATES THAT THEY WILL NOT DO ANYTHING ELSE. I STRONGLY SUSPECT THAT THERE ARE TWO FAILURES. FIRST, THE THROTTLE BODY IS MALFUNCTIONING INTERMITTENTLY CAUSING THE PROBLEM. SECOND, THE ECM IS FAILING TO DETECT AND RECORD THE EVENT. *NM
Additional Summary:

Toyota ID No:
NHTSA ODI No: 10157743
Date of Incident: 20060224
Vehicle: 2005 TOYOTA CAMRY
Location of Incident: VERNON HILLS, IL
NHTSA Summary:
I WAS SLOWLY TURNING LEFT INTO A PARKING SPACE AT ABOUT 1:30 P.M., WHEN MY 2005 TOYOTA CAMRY SUDDENLY, AND QUITE RAPIDLY, ACCELERATED WITHOUT ANY INPUT FROM ME. IT JUMPED A CURB, CROSSED A SIDEWALK, AND A TREE STOPPED THE CAR. IT FELT LIKE I HAD NO CONTROL OF THE CAR. ALSO, THE STEERING WAS EXTREMELY DIFFICULT. SOMEHOW, I MANAGED TO STEER THE CAR AWAY FROM THE APARTMENT BUILDING AND MY NEIGHBOR GLASS SLIDER. THE CAR TRAVELED ABOUT 30 PLUS FEET IN ITS ACCELERATION, WHEN A TREE STOPPED IT. IT LEFT ABOUT 20 FEET OF SKID MARKS. I WAS NOT HURT IN THE CRASH. THE CAR SUSTAINED DAMAGE, MAINLY TO THE FRONT BUMPER, COOLANT SYSTEM, AND HOOD. FOR APPROXIMATELY $3,000, I FILED A COMPLAINT WITH TOYOTA CORPORATION, TORRANCE, CALIFORNIA, AND THEY INVESTIGATED THE CAR. THEY REPORTED THEY COULD FIND NOTHING WRONG WITH THE CAR, AND THERE WERE NO DEBRIS FAULTS. THE TOYOTA DEALER WHERE I HAD BOUGHT THE CAMRY ADDITIONALLY TESTED THE CAR COMPUTERS, AND ALSO CALLED IN A TOYOTA FACTORY REPRESENTATIVE TO TEST THE CAR. THEY COULD FIND NOTHING WRONG WITH THE CAR. I SOLD THE CAMRY BACK TO THE DEALER. THE CAR HAD ABOUT 5,600 MILES ON IT AT THE TIME OF THE CRASH. THE CAR HAD BEEN RUNNING WELL UNTIL THIS SUDDEN, UNEXPLAINED ACCELERATION THAT RESULTED IN A CRASH. *TR
Additional Summary:

Toyota ID No:
NHTSA ODI No: 10171952
Date of Incident: 20060325
Vehicle: 2006 TOYOTA RAV4
Location of Incident: NASHVILLE, TN
NHTSA Summary:
I PURCHASED A 2006 TOYOTA RAV4 LIMITED 4 CYL IN JANUARY/FEBRUARY OF 2006. I NOTICED A PROBLEM IN ACCELERATION/HESITATION AFTER DRIVING THE VEHICLE FOR

ABOUT A WEEK. I HAVE EXPERIENCED ACCELERATION PROBLEMS ON A DAILY BASIS. STEADY PRESSURE ON THE ACCELERATOR YIELDS NO RESPONSE, OR A STUTTER AS THOUGH THE CAR IS ABOUT TO STALL. WHEN THIS OCCURS, THE ONLY WAY TO GET THE CAR MOVING IS TO PUSH THE PEDAL ALL THE WAY TO THE FLOOR, AT WHICH POINT THE ENGINE RACES AND THE CAR SPEEDS UP. THIS HESITATION HAPPENS THROUGHOUT THE DAY. THE FIRST TIME THIS OCCURRED I WAS PULLING ONTO A MAJOR HIGHWAY FROM A SIDE STREET AND WAS NEARLY REAR-ENDED BECAUSE THE CAR SIMPLY WOULD NOT GO UNTIL I SLAMMED THE PEDAL TO THE FLOOR. THIS IS VERY UNSAFE FOR EVERYDAY DRIVING. I REPORTED THE PROBLEM TO THE TOYOTA DEALER WHO STATED THAT THIS PROBLEM WAS NORMAL FOR TOYOTAS AND SOMETHING UNHEARD OF THAT DIED TO. THEY DID CHECK OUT THE CAR AND SAID NO ERROR CODES WERE GENERATED AND THEY WERE UNABLE TO DUPLICATE THE PROBLEM. *NM
Additional Summary:

Toyota ID No:
NHTSA ODI No: 10155940
Date of Incident: 20060201
Vehicle: 2002 TOYOTA TACOMA
Location of Incident: MIDLAND, PA
NHTSA Summary:
DTS: THE CONTACT STATED THE ENGINE REVS BY ITSELF. THIS HAS OCCURRED ON FIVE SEPARATE OCCASIONS EITHER DRIVING OR PARKED. ONCE WHILE PARKED WITH THE EMERGENCY BRAKE ENGAGED THE VEHICLE REVVED. ON ANOTHER OCCASION WHILE DRIVING IT FELT AS THOUGH THE ACCELERATOR PEDAL WAS PUSHING DOWN BY ITSELF. THE VEHICLE HAS NOT BEEN TAKEN TO THE DEALERSHIP FOR INSPECTION. UPDATED 05/10/06
Additional Summary:

Toyota ID No:
NHTSA ODI No: 10152371
Date of Incident: 20060101
Vehicle: 2001 TOYOTA COROLLA
Location of Incident: ST. THOMAS, VI
NHTSA Summary:
DROVE CAR TO WORK ON DAY OF ACCIDENT WITH NO INCIDENTS. PARKED VEHICLE FOR ABOUT 3 HOURS THEN DROVE IT AGAIN FOR ABOUT 1 HALF HOUR THEN PARK. AT 1:00 P.M. LEFT THE OFFICE TO GO HOME. ON THE WAY HOME I MADE TOW STOPS, ONE AT THE POST OFFICE AND ANOTHER AT MY SISTER'S HOUSE. UPON LEAVING MY SISTER'S, I PROCEED TO GO UP HILL. WHEN I GOT TO THE TOP OF THE HILL WITH MY FOOT ON THE BRAKE PEDAL I PROCEEDED TO PUT THE VEHICLE IN LOW GEAR AS I AM ACCUSTOMED TO WHEN GOING DOWN A HILL WHICH I WAS ABOUT TO DO, AS I PUT THE VEHICLE IN GEAR, IT ACCELERATED TO TOP SPEED GOING DOWN THE HILL. I LOOKED DOWN TO MAKE SURE MY FOOT WAS ON THE BRAKE PEDAL...IT WAS. THE VEHICLE BEGAN RACING DOWN HILL. I APPLIED THE EMERGENCY BRAKES BUT IT DID NOT HOLD. I DECIDED TO TRY TO STEADY THE VEHICLE WITH BOTH HANDS ON THE STEERING WHEEL AS I LOST CONTROL OF THE VEHICLE TO NO AVAIL. I CRASHED INTO A PARKED VEHICLE. BOUNCED FROM SIDE TO SIDE THEN HIT A BUMP IN THE ROAD AND BECAME AIRBORNE. THE VEHICLE DROPPED IN A DITCH BOUNCED AGAIN THEN CRASHED INTO A DIRT EMBANKMENT ON THE OTHER SIDE OF THE STREET AT WHICH TIME BOTH THE DRIVER'S AND PASSENGER'S AIRBAGS DEPLOYED. ON JANUARY 6, 2006 I TOOK THE VEHICLE TO THE TOYOTA DEALER HERE ON ST. THOMAS FOR FULL SERVICE. THE FRONT BRAKES WERE CHANGED AS INDICATED ON MY WORK ORDER AND THE BACK BRAKES WERE CLEANED AND ADJUSTED. ON MARCH 6, 2006, I WENT IN TO THE SERVICE DEPARTMENT TO REPORT

THE ACCIDENT DESCRIBING WHAT HAPPENED. I WAS TOLD THAT THE BRAKES WERE NOT THE PROBLEM. WHEN I ASKED WHAT WOULD CAUSE THE VEHICLE TO DO SOMETHING LIKE THAT, THEY TOLD ME THEY DID NOT KNOW AND THAT THEY WOULD HAVE A SPECIALIST FROM PUERTO RICO FLY IN TO LOOK AT THE VEHICLE. I AM WAITING TO HEAR FROM THEM. *NM
Additional Summary:

Toyota ID No:
NHTSA ODI No: 10155719
Date of Incident: 20060302
Vehicle: 2005 LEXUS ES
Location of Incident: LARGO, FL
NHTSA Summary:
SUDDEN, UNINTENDED ACCELERATION DUE TO SIGNIFICANT THROTTLE LAG. PEDAL IS ALMOST TO THE FLOOR BEFORE CAR MOVES, AND THEN DOES SO AS IF YOU HAD DELIBERATELY PUSHED IT THAT FAR. ALSO, UPON ACCELERATION, CAR STALLS FOR ONE TO TWO SECONDS BEFORE ENGAGING. THIS HAS CAUSED SEVERAL NEAR COLLISIONS. ONE WITH A DUMP TRUCK. LEXUS CLAIMS THIS IS "OPERATING AS DESIGNED." *TR
Additional Summary:

Toyota ID No:
NHTSA ODI No: 10153523
Date of Incident: 20060108
Vehicle: 2004 TOYOTA TACOMA
Location of Incident: FOUNTAIN VALLEY, CA
NHTSA Summary:
AT A STOP, VEHICLE DOES NOT ACCELERATE AFTER DEPRESSING THE GAS PEDAL. 2 OCCASIONS NEARLY CAUSED AN ACCIDENT. ALSO, AT CRUISING SPEEDS (60-70 MPH) VEHICLE WILL DECELERATE WITHOUT ANY CHANGE IN PRESSURE TO THE GAS PEDAL. *NM
Additional Summary:

Toyota ID No:
NHTSA ODI No: 10152689
Date of Incident: 20060314
Vehicle: 2002 TOYOTA CAMRY
Location of Incident: TULSA, OK
NHTSA Summary:
DTS: THE CONTACT STATED THE VEHICLE HAS LURCHED FORWARD SIX TIMES SINCE PURCHASE. THIS HAPPENS WITH THE BRAKE PEDAL DEPRESSED AND WITH THE VEHICLE AT A STOP OR WHILE TRAVELING. THE VEHICLE HAS BEEN TO THE DEALERSHIP, BUT THE PROBLEM COULD NOT BE DUPLICATED. THE MANUFACTURER HAS BEEN ALERTED.
Additional Summary:

Toyota ID No:
NHTSA ODI No: 10153732
Date of Incident: 20060310
Vehicle: 2003 TOYOTA COROLLA
Location of Incident: EASTON, PA
NHTSA Summary:

WHILE ROLLING TO A STOP BETWEEN TRAFFIC SIGNALS FOOT OFF THE GAS PEDAL MY VEHICLE SUDDENLY REVVED ITSELF UP AND RUN TED FORWARD CREATING A 1 VEHICLE ACCIDENT. I HIT THE BRAKE WHEN I FELT THE INITIAL SURGE, BUT STILL HIT THE VEHICLE IN FRONT. SEAT BELTS WERE WORN IN EACH VEHICLE AND MY AIRBAG DIDN'T DEPLOY. MY VEHICLE HAS SUFFERED OVER $4,500 IN DAMAGE AND WON'T RUN WHILE IT SITS AT AN AUTO BODY SHOP, THE NOSE AND BUMPER ARE BADLY DAMAGED. I WAS TOLD THIS SOUNDS LIKE "UNINTENTIONAL ACCELERATION" . THE VEHICLE IS AWAITING THE PARTS FOR REPAIRS. *JB
Additional Summary:

Toyota ID No:
NHTSA ODI No: 10152234
Date of Incident: 20060319
Vehicle: 2000 TOYOTA TUNDRA
Location of Incident: KING GEORGE, VA
NHTSA Summary:
CRUISE CONTROL DOWN SHIFTS TWO GEARS ON SLIGHT UPGRADES. EVEN ELEVATION CHANGES OF LESS THAN FIFTY FEET ON THE HIGHWAY CAN TRIGGER THIS. THE SUDDEN UNINTENDED APPLICATION OF FULL THROTTLE ACCELERATION IS ALARMING AND DANGEROUS. THIS SURGE OR POWER ALWAYS RESULT IN THE CRUISE CONTROL SURGING PAST THE SET SPEED USUALLY BY FIVE MILES PER HOUR. DEPENDING ON TERRAIN THIS CAN HAPPEN AS OFTEN AS EVERY TWENTY SECONDS. *SM
Additional Summary:

Toyota ID No:
NHTSA ODI No: 10154310
Date of Incident: 20060321
Vehicle: 2002 TOYOTA CAMRY
Location of Incident: COSTA MESA, CA
NHTSA Summary:
2 INCIDENTS OF SUDDEN ACCELERATIONS. THIS LAST ONE CAUSING PROPERTY DAMAGE. THE DEALER SAID NOTHING WRONG WITH CAR. I FOUND MANY OTHER PEOPLE ON-LINE THAT HAD SAME PROBLEM. SOMEONE IS GOING TO GET KILLED IN A CROSSWALK OR PARKING LOT. I'M AFRAID TO DRIVE IT OR SELL IT TO ANOTHER WITH THIS PROBLEM. *SM
Additional Summary:

Toyota ID No:
NHTSA ODI No: 10154294
Date of Incident: 20060225
Vehicle: 2004 TOYOTA CAMRY
Location of Incident: BROAD RUN, VA
NHTSA Summary:
SUDDEN ACCELERATION OF OUR 2004 TOYOTA CAMRY XLE AFTER SLOWING DOWN AND MAKING A 180 DEGREE RIGHT TURN INTO THE GARAGE. THE CAR ACCELERATED ON ITS OWN FOR 50 FEET, SIDE-SWIPED OUR JEEP PARKED IN THE GARAGE, AND THEN TOOK OFF THE LOAD BEARING WALL AT THE REAR RIGHT OF THE GARAGE. CAR HAS 18K MILES ON IT AND HAS BEEN GARAGED AT ALL TIMES. INSURANCE ADJUSTER SAYS THERE APPEARS TO BE A PROBLEM, BUT CANNOT FIGURE IT OUT SINCE THIS IS CAR RELIES ON ELECTRONIC CONTROL THROUGHOUT. *SM
Additional Summary:

Toyota ID No:
NHTSA ODI No: 10153776
Date of Incident: 20060326
Vehicle: 2004 TOYOTA COROLLA
Location of Incident: MERRIAM, KS
NHTSA Summary:
ETC. THE CONTACT STATED WHILE PLACING THE ENGINE INTO DRIVE, THE ENGINE REVVED HIGH AND THE VEHICLE SUDDENLY ACCELERATED. THE BRAKE PEDAL WAS DEPRESSED WHEN THE VEHICLE CRASHED INTO A BRICK GARAGE WITH NO PRIOR WARNING. THE VEHICLE SUSTAINED DAMAGE TO THE FRONT WITH ADDITIONAL DAMAGE TO THE GARAGE. THE POLICE WERE NOT CONTACTED SINCE THIS HAPPENED ON PRIVATE PROPERTY. THE VEHICLE REMAINS AT THE SCENE OF THE INCIDENT AND HAS NOT BEEN INSPECTED.
Additional Summary:

Toyota ID No:
NHTSA ODI No: 10151549
Date of Incident: 20060403
Vehicle: 2003 TOYOTA CAMRY
Location of Incident: BOYNTON BEACH, FL
NHTSA Summary:
I WAS PARKED IN A STRIP MALL WHERE I HAD JUST PICKED UP SOME DRY CLEANING. I ENTERED MY CAR, A 2003 TOYOTA CAMRY XLE, AND STARTED THE ENGINE. I THEN PUT THE CAR IN REVERSE GEAR, AND REMOVED MY FOOT FROM THE BRAKE. THE CAR SUDDENLY ACCELERATED IN REVERSE, AND WENT TOTALLY OUT OF CONTROL, HITTING ANOTHER CAR PARKED ACROSS FROM MINE AND CONTINUED IN A SOMEWHAT CIRCULAR PATH UNTIL I WAS ABLE TO APPLY THE BRAKE AND COME TO A STOP. I HAVE CALLED NHTSA TODAY AND WAS TOLD THAT THERE HAVE BEEN 82 PREVIOUS COMPLAINTS FOR THIS VEHICLE UNDER "VEHICLE SPEED CONTROL, ACCELERATOR PEDAL." I HAVE ALSO CALLED TOYOTA MOTOR SALES (1 800 331-4331) AND WAS TOLD THAT THEY WOULD MAKE AN APPOINTMENT WITH A NEARBY TOYOTA DEALER TO HAVE MY CAR INSPECTED FOR ANY DEFECTS. I HAVE ALSO GONE TO A AUTO BODY SHOP WHERE THE DAMAGES TO MY CAR HAVE BEEN ESTIMATED AT $3,879.12. IN ADDITION, THE POLICE ARRIVED AT THE SCENE AND I WAS CITED FOR "CARELESS DRIVING", AND PAID A FINE OF $107.76. I AM ALSO BEEN REQUIRED TO ATTEND A 4 HOUR TRAFFIC SCHOOL WHERE THE FEE IS $25.95. I WISH TO HAVE THIS MATTER INVESTIGATED.
Additional Summary:

Toyota ID No:
NHTSA ODI No: 10296058
Date of Incident: 20060412
Vehicle: 2006 TOYOTA CAMRY
Location of Incident: DANIELSVILLE, GA
NHTSA Summary:
TL* THE CONTACT OWNS A 2006 TOYOTA CAMRY. THE VEHICLE WOULD HESITATE WHEN APPLYING PRESSURE ON THE ACCELERATOR PEDAL, AND THEN LURCH FORWARD. THE VEHICLE HAS BEEN TAKEN TO THE DEALER MULTIPLE TIMES. THE TECHNICIANS STATED THAT THEY COULD NOT PROVIDE A REMEDY BECAUSE IT WAS A COMPUTER FAILURE BETWEEN THE ACCELERATOR PEDAL AND THE MOTOR. THE FAILURE MILEAGE WAS 4500. THE CURRENT MILEAGE WAS 40,000.
Additional Summary:

Toyota ID No:
NHTSA ODI No: 10155784
Date of Incident: 20060414
Vehicle: 2006 TOYOTA TUNDRA
Location of Incident: ALEXANDRIA, VA
NHTSA Summary:
2006 TUNDRA - HAVE HAD TRUCK ONLY 2 WEEKS AND TOOK ROAD TRIP. WHEN USING CRUISE CONTROL AND STARTING UP A MODEST HILL VEHICLE WILL KICK DOWN FROM OVERDRIVE INTO DRIVE. EVEN THOUGH W/O CRUISE VEHICLE CAN HANDLE HILL FINE IN OVERDRIVE. THIS WILL BRING RPMS FROM 2000 TO 3000. THIS IS MERELY ANNOYING. SOMETIMES WILL KICK DOWN FAST DRIVE AND INTO 3RD GEAR, BRINGING RPMS TO 5000 AND CAUSE THE VEHICLE TO ACCELERATE RAPIDLY ON HILL. THIS SEEMS UNSAFE, ESPECIALLY IN CROWDED OR WET CONDITIONS. HAVE FOUND NUMEROUS COMPLAINTS FROM OTHER TUNDRA OWNERS ONLINE. ALL SAY DEALER AND TOYOTA CLAIM THIS IS "NORMAL." TOYOTA CORPORATE OFFICE TOLD ME THEY CONSIDER THIS "NORMAL" AND RECOMMEND I NOT USE CRUISE CONTROL IN HILLY AREAS. MUST NOT HAVE HILLY AREAS WHERE TOYOTA ENGINEERS LIVE. *SM
Additional Summary:

Toyota ID No:
NHTSA ODI No: 10156985
Date of Incident: 20060415
Vehicle: 2004 TOYOTA CAMRY SOLARA
Location of Incident: SAN FRANCISCO, CA
NHTSA Summary:
THROTTLE LAG AT LOW SPEED AND FROM STOP IS INCONSISTENT AND HAS BEEN THE CAUSE FOR SEVERAL CLOSE CALLS WHEN PULLING INTO TRAFFIC. SOME INSTANCES HAVE BEEN SEVERAL SECONDS BEFORE ACTUAL THROTTLE RESPONSE. DRIVER HAS TO USE HARDER ACCELERATION TO COMPENSATE WHEN THIS HAPPENS. THIS IS A SAFETY ISSUE THAT TOYOTA IS AWARE OF BUT REFUSES TO ADMIT IT IS A PROBLEM. DRIVER IS VERY CONCERNED THAT THIS ISSUE WILL BE CAUSE OF AN ACCIDENT. WAS PROVIDED SUPPOSED "UPDATE" TO CAR COMPUTER, BUT SAME PROBLEM EXISTS. DEALERSHIP STATED THAT "UPDATE" DOES NOT HELP ENTIRELY. *SM
Additional Summary:

Toyota ID No:
NHTSA ODI No: 10162826
Date of Incident: 20060426
Vehicle: 2006 TOYOTA RAV4
Location of Incident: TAMPA, FL
NHTSA Summary:
VEHICLE SPEED CONTROL. THE RAV4 HAS SOME SPEED CONTROL PROBLEMS. SOMETIMES, IT DOES NOT DOWN-SHIFT PROPERLY. THEN, SUDDENLY IT DOWN SHIFTS AND ACCELERATES EXTREMELY. THERE IS NO CERTAIN WAY OF CONTROLLING THE SHIFT. IT MAY CREATE HAZARDOUS SITUATIONS ESPECIALLY MERGING TO THE TRAFFIC. *SM
Additional Summary:

Toyota ID No:
NHTSA ODI No: 10264135

Date of Incident: 20060422
Vehicle: 2006 TOYOTA CAMRY SOLARA
Location of Incident: CHANDLER, AZ
NHTSA Summary:
I OWN A 2006 SOLARA SLE 6CY. AND THE CAR HESITATES WHEN ACCELERATING (SUCH AS MERGING INTO TRAFFIC). TOYOTA HAS KNOWLEDGE OF THIS VERY PROBLEM ALONG WITH THE DEALERSHIPS AND ALL THAT NEEDS TO BE DONE IS A REFLASH. THE PROBLEM HAS TO DO WITH THE CARS ONBOARD COMPUTER. SO WHEN THEY PUT AN UPDATE IN THE COMPUTER IT IS CALLED REFLASHING. IF ENOUGH PEOPLE COMPLAIN OF SOMEONE IS KILLED THEY MIGHT FIND THE TIME TO TAKE CARE OF THIS. SO WHEN I AND MANY OTHERS TAKE THE TIME TO ADVISE TOYOTA AND THE DEALERSHIPS, I FEEL THEY SHOULD TAKE THE TIME TO ADDRESS THIS PROBLEM. PLEASE HELP ADDRESS THIS PROBLEM BY FILING A COMPLAINT AND ALSO BY CALLING TOYOTA. MAYBE WE CAN FINALLY GET THE HESITATION PROBLEM TAKEN CARE OF. *TK THANK YOU. JJ
Additional Summary:

Toyota ID No:
NHTSA ODI No: 10273487
Date of Incident: 20060425
Vehicle: 2004 TOYOTA COROLLA
Location of Incident: SOMMI, CA
NHTSA Summary:
TL* THE CONTACT OWNS A 2004 TOYOTA COROLLA. THE CONTACT STATED THAT THE VEHICLE ACCELERATED ON ITS OWN. THE CONTACT TOOK THE VEHICLE TO THE DEALER AND THEY KEPT IT OVERNIGHT. THEY FOUND NO FAILURES WITH THE VEHICLE. THE FAILURE RECURRED AND THE VEHICLE WAS TAKEN BACK TO THE DEALER. ONCE AGAIN, NO FAILURES WERE FOUND. ON ONE OCCASION, THE VEHICLE ACCELERATED AND STRUCK ANOTHER VEHICLE. THE OCCUPANTS IN THE OTHER VEHICLE WERE INJURED AND THE CONTACT SUSTAINED CHEST PAIN FROM THE SEAT BELT. A POLICE REPORT WAS FILED. THE VEHICLE WAS TAKEN TO THE DEALER AND THEY MADE REPAIRS. THE CONTACT DID NOT FEEL SAFE DRIVING THE VEHICLE. THEREFORE, IT WAS REPLACED WITH A 2006 COROLLA. CURRENTLY, THE 2006 COROLLA IS EXPERIENCING THE SAME FAILURES AS THE 2004 MODEL. THE DEALER STATED THAT SHE COULD BRING IN THE VEHICLE AND PAY $90 PER HOUR FOR A DIAGNOSTIC. THE CONTACT IS AFRAID TO DRIVE THE VEHICLE. THE FAILURE AND CURRENT MILEAGES WERE 12,000.
Additional Summary:

Toyota ID No:
NHTSA ODI No: 10156567
Date of Incident: 20050427
Vehicle: 2003 TOYOTA COROLLA
Location of Incident: TRUJILLO ALTO, PR
NHTSA Summary:
ON APRIL 27, 2006 MY DAD STARTED THE ENGINE TO GO TO CHURCH AND THE CAR ACCELERATED IN PARKING POSITION. CAR WAS TURNED OFF AND STARTED AGAIN, ONCE STARTED IT DROVE FINE. THE SAME DAY WHEN MY DAD WAS COMING FROM CHURCH HE STARTED THE CAR AND WHEN HE PUT IN DRIVE THE CAR ACCELERATED ITSELF AND JUMPED OUT AND WENT OVER A PIECE OF SAND THAT WAS ON THE SIDE ON THE ROAD. THE CAR FLIPPED AND STOPPED AGAINST THE FENCE OF A HOUSE. THE AIR BAGS DID NOT DEPLOY. MY DAD WAS TAKEN TO THE HOSPITAL AND THE CAR WAS A TOTAL LOSS. HE WAS LUCKY TO HAVE HIS SEAT BELT ON. I'VE REVIEWED OTHER COMPLAINTS AND IT SEEMS TO ME THAT THIS HAS HAPPENED TOO MANY TIMES TO JUST

BE A RANDOM DEFECT. I HOPE THIS ACCIDENT IS INVESTIGATED TO AVOID UNNECESSARY DEATHS DUE TO THIS PROBLEM. *JB
Additional Summary:

Toyota ID No:
NHTSA ODI No: 10156846
Date of Incident: 20060428
Vehicle: 2003 TOYOTA CAMRY
Location of Incident: SOUTH RUSSELL, OH
NHTSA Summary:
DT*: THE CONTACT STATED WHILE DRIVING 25 MPH DEPRESSING THE BRAKE PEDAL THE VEHICLE ACCELERATED. THIS OCCURRED FOUR TIMES. THE FIRST 3 TIMES THE VEHICLE WAS STOPPED WITH EXCESSIVE PRESSURE TO THE BRAKE PEDAL. THE LAST TIME THE VEHICLE STRUCK A POLE. THERE WAS A POLICE REPORT TAKEN AT THE SCENE OF THE ACCIDENT. THE VEHICLE WAS TOWED TO AN INDEPENDENT REPAIR SHOP FOR BODY REPAIRS CAUSED BY THE CRASH. WHEN THE VEHICLE WAS INSPECTED THE FIRST THREE TIMES DIAGNOSTIC TESTING DID NOT IDENTIFY ANY CODES. ALSO, WHILE CARRYING 125 POUNDS OF BIRD SEED IN THE TRUNK, THE VEHICLE BEGAN TO VIBE TO THE LEFT ON A SLIPPERY ROAD. WHEN THE BIRD SEED WAS MOVED TO THE FRONT PASSENGER SEAT THE VEHICLE OPERATED NORMALLY. THE MANUFACTURER WAS ALERTED. UPDATED 7/11/2006 - THE CONSUMER REPORTED THESE INCIDENTS TO THE DEALER BUT THEY TOLD THE CONSUMER THAT NOTHING WAS WRONG. *NM
Additional Summary:

Toyota ID No:
NHTSA ODI No: 10157467
Date of Incident: 20060410
Vehicle: 2003 TOYOTA CAMRY
Location of Incident: CENTENNIAL, CO
NHTSA Summary:
I WAS DRIVING INTO THE AUTOMATIC CAR WASH, SLOWED TO GO UP SLIGHT RAMP TO TOP. GAVE THE CAR A LITTLE GAS AND IT STARTED REVING, DID NOT STOP WHEN BRAKE PEDAL PUSHED, JUMPED THE TRACK AND HIT THE SIDE OF THE CAR WASH. THE CAR WAS ABLE TO BE MOVED TO OUTSIDE CARWASH, STILL REVVING BUT WAS ABLE TO STOP AND TURN OFF THE ENGINE. THE FRONT BUMPER AND DRIVER'S SIDE FRONT FENDER WERE REPLACED, AND SUSPENSION DAMAGE REPAIRED. *NM
Additional Summary:

Toyota ID No:
NHTSA ODI No: 10094525
Date of Incident: 20060504
Vehicle: 2002 LEXUS RX300
Location of Incident: SHAVER TOWN, PA
NHTSA Summary:
TL*THE CONTACT OWNS A 2002 RX300 LEXUS. WHILE DRIVING 55 MPH ON A HILL, THE VEHICLE ACCELERATED ON ITS OWN AND THE PEDAL WAS STUCK TO THE FLOOR. SHE WAS ONLY ABLE TO STOP THE VEHICLE AFTER SHIFTING INTO NEUTRAL GEAR. THE CONTACT SHUT THE ENGINE OFF AND ATTEMPTED TO EXIT THE VEHICLE; HOWEVER, THE DOORS FAILED TO OPEN INSTB. SHE RESTARTED THE VEHICLE. THERE WAS A LOUD NOISE PRESENT IN THE ENGINE AFTER RESTARTING THE VEHICLE; HOWEVER, THE VEHICLE BEGAN MOVING IN REVERSE. THE VEHICLE WAS TOWED TO THE DEALER WHERE THE VEHICLE WAS PURCHASED. THE DIAGNOSTIC COMPUTER TEST INDICATED

THAT THERE WAS NOTHING WRONG WITH THE VEHICLE. THE DEALER STATED THAT THE FLOOR MATS COULD HAVE CAUSED THE FAILURE; ALTHOUGH, THE HOOKS WERE SECURELY FASTENED ONTO THE FLOOR MATS. THE FAILURE OCCURRED ON ONE OCCASION. THE FAILURE MILEAGE WAS 43,433 AND THE CURRENT MILEAGE WAS 73,000.
Additional Summary:

Toyota ID No:
NHTSA ODI No: 10179866
Date of Incident: 20060507
Vehicle: 2006 TOYOTA RAV4
Location of Incident: MERCER, WI
NHTSA Summary:
TL* - THE CONTACT STATED THE HE OWNS A 2006 TOYOTA RAV4. WHILE DRIVING HIS VEHICLE AT 3 MPH AND HE WAS TRIED TO COME TO A STOP WHEN THE VEHICLE ACCELERATED. THE CONTACT STATED THAT THIS HAPPENED 3 TIMES BEFORE HE TOOK THE VEHICLE TO DEALERSHIP. THE DEALERSHIP DID RUN A COMPUTER DIAGNOSTIC AND FOUND NO RECORD. THE CONTACT STATED THAT THE VEHICLE RAN FINE FOR A WHILE AND ON 12/29/06 WHILE DRIVING THE VEHICLE TRIED TO MAKE A TURN AND TO STOP WHEN THE VEHICLE ACCELERATED AGAIN. HE STATED THAT THIS HAS HAPPENED 4 TIMES THAT DAY. THE CONTACT STATED THAT THE SECOND TIME THE VEHICLE WOULD NOT COME TO A STOP AND RAN INTO STAIRS WHICH DAMAGED THE GUARD THAT PROTECTS THE BUMPER. THE CONTACT CALLED TOYOTAS REGIONAL OFFICE IN CHICAGO. THE CONTACT MET AN INVESTIGATOR AT A DEALERSHIP TO RUN MORE DIAGNOSTIC TESTING. THE CONTACT STATED THAT THE INVESTIGATOR FOUND NOTHING WRONG WITH THE VEHICLE, BUT IS WAITING FOR THE OFFICIAL TEST RESULTS. *JB THE CONSUMER STATED THE THIRD TIME THE INCIDENT HAPPENED, HE RAN INTO A DECK AND CAUSED DAMAGE TO THE VEHICLE. UPDATED 03/07/07*JB
Additional Summary:

Toyota ID No:
NHTSA ODI No: 10157726
Date of Incident: 20060508
Vehicle: 2004 TOYOTA CAMRY
Location of Incident: GREENSBORO, NC
NHTSA Summary:
DT*: THE CONTACT STATED THE VEHICLE ACCELERATED OUT OF CONTROL 3 TIMES WHEN PULLING INTO A PARKING SPACE. THE CONSUMER NEVE RHIT ANOTHER PERSON OR CAR. SHE LIE IN A RETIREMENT HOME WITH OTHERS WHO PARK IN A CROWDED LOT. THE CONTACT BELIEVED THAT A DEFECT CAUSED THESE THREE INCIDENTS. UPDATED 06/01/2006. *AS, TS
Additional Summary:

Toyota ID No:
NHTSA ODI No: 10158314
Date of Incident: 20060509
Vehicle: 2003 TOYOTA CAMRY
Location of Incident: ALEXANDRIA, VA
NHTSA Summary:
DT*: THE CONTACT STATED WHILE DRIVING SLOWLY AT 1 MPH WIT FOOT ON THE BRAKE PEDAL, THE VEHICLE ACCELERATED SUDDENLY CAUSING AN ACCIDENT. THE VEHICLE CRASHED INTO THREE OTHER VEHICLES CAUSING PROPERTY DAMAGE. THE SEAT BELTS WERE IN USE AT THE TIME. THE AIR BAGS DID NOT DEPLOY. THERE WERE NO PROBLEMS

PRIOR TO THIS ACCIDENT. THE VEHICLE WAS TOWED TO LOCAL DEALERSHIP WHERE THEY WERE UNABLE TO DUPLICATE THE PROBLEM. THE VEHICLE HAS BEEN INSPECTED BY TOYOTA. THE POLICE WERE ALERTED TO THE SCENE AND A REPORT WAS FILED. UPDATED 6/19/2006 - *NM
Additional Summary:

Toyota ID No:
NHTSA ODI No: 10157436
Date of Incident: 20060512
Vehicle: 2005 LEXUS LS430
Location of Incident: NOKOMIS, FL
NHTSA Summary:
DT*: THE CONTACT STATED WHILE ATTEMPTING TO APPLY PRESSURE TO THE ACCELERATOR PEDAL AT LOW SPEEDS, THE VEHICLE HESITATED. THE VEHICLE HAS BEEN TAKEN TO THE DEALERSHIP THREE TIMES. THEY DETERMINED IT WAS A DESIGN ISSUE. THE MANUFACTURER WAS ALERTED.
Additional Summary:

Toyota ID No:
NHTSA ODI No: 10286649
Date of Incident: 20060515
Vehicle: 2005 TOYOTA MATRIX
Location of Incident: COLUMBUS, OH
NHTSA Summary:
TL*THE CONTACT OWNS A 2005 TOYOTA MATRIX. WHILE DRIVING 15 MPH AND MAKING A RIGHT TURN HE EXPERIENCED UNINTENDED VEHICLE ACCELERATION. HE WAS ABLE TO RESUME NORMAL OPERATION AFTER REPEATED BRAKING ATTEMPTS. HE EXPERIENCED IDENTICAL FAILURE ON THREE OCCASIONS. THE FAILURE MILEAGE WAS 40,000 AND THE CURRENT MILEAGE WAS 65,500.
Additional Summary:

Toyota ID No:
NHTSA ODI No: 10178056
Date of Incident: 20060521
Vehicle: 2006 TOYOTA RAV4
Location of Incident: WOODINVILLE, WA
NHTSA Summary:
DT*: THE CONTACT STATED AFTER BEING PARKED IN A PARKING LOT FOR 2 HOURS AND 15 MINUTES, THE VEHICLE WAS STARTED. IT WAS PLACED IN REVERSE AND THE ACCELERATOR PEDAL WAS DEPRESSED. WHILE THE ACCELERATOR PEDAL WAS DEPRESSED, THE VEHICLE PROCEEDED AT AN EXCEPTIONAL SPEED. IN AN ATTEMPT TO STOP THE MOMENTUM OF THE VEHICLE, THE CONTACT PLACED THE VEHICLE INTO NEUTRAL. DURING THE INCIDENT, THE VEHICLE MADE AN EXTREMELY LOUD NOISE AS IF THE VEHICLE WAS TRAVELING AT 100 MPH. THE BRAKES WERE USED TO STOP THE VEHICLE. THE KEY WAS TURNED TO THE OFF POSITION AND THE VEHICLE WAS LATER DRIVEN HOME. THE VEHICLE IS CURRENTLY AT THE SERVICE DEALER FOR INSPECTION.
Additional Summary:

Toyota ID No:
NHTSA ODI No: 10158940
Date of Incident: 20060522

Vehicle: 2005 TOYOTA MATRIX
Location of Incident: WEST END, NC
NHTSA Summary:
DT*: THE CONTACT STATED WHILE ATTEMPTING TO APPLY PRESSURE TO THE ACCELERATOR PEDAL THE VEHICLE LURCHED FORWARD. THE DEALERSHIP DETERMINED IT WAS THE LACK OF LUBRICATION TO THE ACCELERATOR PEDAL THAT CAUSED THE PROBLEM. THE MANUFACTURER WAS NOT ALERTED. UPDATED 7/13/2006 - *NM
Additional Summary:

Toyota ID No:
NHTSA ODI No: 10166526
Date of Incident: 20060528
Vehicle: 2006 TOYOTA COROLLA
Location of Incident: KILL DEVIL HILLS, NC
NHTSA Summary:
ON MAY 28, 2006, WHILE ATTEMPTING TO MAKE A ROUTINE STOP IN A COMMERCIAL LOT, THE ENGINE OF THE CAR REVVED, THE CAR ACCELERATED AND JUMPED THE CONCRETE STOP AT THE END OF THE PARKING SPACE AND CRASHED INTO A TREE CAUSING EXTENSIVE DAMAGE ALONG THE DRIVER'S SIDE OF THE CAR. THE CAR WAS TOWED TO THE DEALERSHIP WHO MADE THE REPAIRS. THE DEALERSHIP FROM WHOM I BOUGHT THE CAR INDICATED VERBALLY THAT NOTHING WAS WRONG WITH THE ENGINE. I AM CERTAIN THAT HUMAN ERROR DID NOT PLAY A PART IN THE CAR'S SUDDEN ACCELERATION. *JB
Additional Summary:

Toyota ID No:
NHTSA ODI No: 10196912
Date of Incident: 20060601
Vehicle: 2003 TOYOTA CAMRY
Location of Incident: STONY POINT, NY
NHTSA Summary:
2003 TOYOTA CAMRY FAULTY ACCELERATION CUSTOMER STATES VEHICLE ACCELERATED OUT OF CONTROL AND CAUSED HER TO HIT ANOTHER CAR AND A HOUSE*SS *JB SEE ALSO 10183741 *SY
Additional Summary:

Toyota ID No:
NHTSA ODI No: 10159293
Date of Incident: 20060603
Vehicle: 2002 LEXUS ES
Location of Incident: CHULA VISTA, CA
NHTSA Summary:
WHEN MY VEHICLE IS IMMEDIATELY PUT IN DRIVE GEAR FROM REVERSE GEAR, FOOT TAKEN OFF THE BRAKE AND TAP THE GAS PEDAL, MY VEHICLE SURGES FORWARD AS IF IT IS IN FULL THROTTLE. AS RESULT, MY VEHICLE JUMPED THE CURB AND IMPACTED A BRICK WALL. I SUFFERED A BLOODY NOSE AND A CUT ON MY HAND. THE VEHICLE SUFFERED FRONTAL DAMAGE AND IS UNDRIVEABLE. I HAVE CONTACTED THE AUTO MANUFACTURER. THEY WILL TOW AND INSPECT IT. *JB
Additional Summary:

Toyota ID No:
NHTSA ODI No: 10338979
Date of Incident: 20060601
Vehicle: 2006 TOYOTA TUNDRA
Location of Incident: NARVENT, AL
NHTSA Summary:
TL * THE CONTACT OWNS A 2006 TOYOTA TUNDRA. THE DRIVER-SIDE ALL WEATHER FLOOR-MAT BECAME STUCK UNDERNEATH OF THE ACCELERATOR PEDAL. THE VEHICLE THEN ACCELERATED UP TO 110 MPH. HE TURNED THE VEHICLE OFF AND THEN BACK ON. PULLED THE EMERGENCY BRAKE, AND THEN PRESSED ON THE BRAKE PEDAL, BUT THE VEHICLE WOULD NOT STOP. IT TOOK 1/4 OF A MILE TO STOP THE VEHICLE. AFTER HE DISCONTINUED VEHICLE OPERATION HE REMOVED THE FLOOR MAT FROM UNDER THE ACCELERATOR PEDAL. HE CONTACTED THE DEALER, BUT THEY DID NOT IDENTIFY A REMEDY. THE CURRENT MILEAGE WAS 90,000. THE FAILURE MILEAGE WAS 3,000.
Additional Summary:

Toyota ID No:
NHTSA ODI No: 10164477
Date of Incident: 20050603
Vehicle: 2004 LEXUS ES330
Location of Incident: BLUE BELL, PA
NHTSA Summary:
DT*: THE CONTACT STATED WHILE ENTERING THE DRIVE WAY THE VEHICLE SUDDENLY ACCELERATED WITHOUT WARNING. THERE WAS A CRASH WITH AN ONCOMING VEHICLE BEFORE IT STALLED IN THE YARD ACROSS THE STREET. A POLICE REPORT WAS FILED AND THERE WAS PROPERTY DAMAGE. THE VEHICLE WAS TOWED TO AN INDEPENDENT REPAIR SHOP WHO REPAIRED THE DAMAGES TO THE BODY OF THE VEHICLE. THE DEALER HAS NOT BEEN ALERTED.
Additional Summary:

Toyota ID No:
NHTSA ODI No: 10160463
Date of Incident: 20060607
Vehicle: 2006 TOYOTA CAMRY
Location of Incident: ELMWOOD PARK, IL
NHTSA Summary:
AT APPROXIMATELY 5:40 PM, MY SON WAS BACKING OUT OF OUR DRIVEWAY IN OUR 2004 4 CYLINDER CAMRY. HE PLACED THE CAR IN REVERSE AND THE CAR SHOT BACKWARD AT VERY HIGH SPEED, COMPLETELY OUT OF CONTROL. THE CAR TRAVELED ABOUT 65 FEET ACROSS OUR NARROW SIDE STREET, WHERE THE CAR SIDE-SWIPED A CEMENT WORKER'S TRUCK AND SUBSTANTIALLY SLOWED DOWN FOR ABOUT 1 SECOND DUE TO THE CONTACT. MY SON WAS ATTEMPTING TO PULL THE ACCELERATOR UP WITH HIS FOOT WHILE THE CAR WAS SIDE-SWIPED, THINKING THAT THE ACCELERATOR HAD JAMMED, WHEN THE CAR BROKE AWAY FROM THE SIDE-SWIPE AND AGAIN SHOT OUT AT UNCONTROLLABLE SPEED. THE CAR HAD BEEN STEERED SLIGHTLY TO THE DRIVER'S LEFT, SO THE CAR PROCEEDED IN A SEMI-CIRCLE. ANOTHER 75 FEET, BACK ACROSS THE CURB OVER OUR LAWN THROUGH AND OVER APPROXIMATELY 1 FOOT HIGH LANDSCAPING STONE AND CAME TO A REST INCHES FROM OUR HOUSE, ONLY AFTER MY SON PULLED UP THE PARKING BRAKE AND SOMEHOW THROW THE CAR INTO PARK. I'VE GONE THROUGH TOYOTA REGIONAL IN AURORA, IL - THEY SENT THEIR ENGINEER WHO PERFORMED A NON-ROAD TEST ON THE CAR. AT THE BODY SHOP, FOUND NOTHING WRONG. THEREAFTER, ONE OF MY CO-WORKERS DID SOME WEB SEARCH AND DISCOVERED THE CONCEPT OF "SUDDEN ACCELERATION". THE RECALL ON THE 2001 &

CYLINDER TOYOTAS AND THE NHTSA INQUIRIES ON THE 2002-04 MODELS. TOYOTA REFUSES TO DO ANYTHING OTHER THAN HAVE THEIR ENGINEER MEET ME TO DO A ROAD TEST AFTER THE BODY WORK IS FIXED. I AM SHOCKED AND STUNNED AT TOYOTA'S LACK OF CONCERN ON SUCH AN OBVIOUS SAFETY ISSUE. I HAVE MORE, BUT HAVE ENTER THIS TO COMPLY WITH THE 2000 CHARACTER REQUIREMENT. PLEASE CONTACT ME. *NM
Additional Summary:

Toyota ID No:
NHTSA ODI No: 10160012
Date of Incident: 20060609
Vehicle: 2003 TOYOTA CAMRY
Location of Incident: NILES, IL
NHTSA Summary:
DT*: THE CONTACT STATED WHILE DRIVING 7 MPH IN HEAVY STOP AND GO TRAFFIC WITH THE BRAKES APPLIED, THE VEHICLE ACCELERATED INTO THE REAR OF ANOTHER VEHICLE. THE CONTACT WAS WEARING A SEAT BELT AND NO INJURIES WERE SUSTAINED. MINOR DAMAGE WAS SUSTAINED TO THE VEHICLE. THE POLICE WERE ON THE SCENE AND A REPORT WAS TAKEN. THE VEHICLE WAS NOT INSPECTED BY A DEALER. UPDATED 7/13/2006 - THIS ACCELERATION PROBLEM OCCURRED 6-7 TIMES PRIOR TO THIS ACCIDENT. *NM
Additional Summary:

Toyota ID No:
NHTSA ODI No: 10159869, 10161408
Date of Incident: 20060810
Vehicle: 2005 TOYOTA HIGHLANDER
Location of Incident: ELLWOOD CITY, PA
NHTSA Summary:
I DROVE UP HILL, SLOWED, TURNED, AND PULLED BEHIND TRUCK TO PARK OFF THE SIDE OF THE ROAD. THIS WAS ALSO UPHILL. THE CAR WAS STOPPED, I WENT TO PUT MY FOOT ON THE BRAKE TO SHIFT INTO PARK, AND THE CAR FOR SOME REASON ACCELERATED WILDLY (LOUD ROARING OF ENGINE). IT THEN LURCHED FORWARD VERY FAST AND SLAMMED INTO THE TRUCK THAT WAS IN FRONT OF ME. I HAD NO POWER TO STOP IT. THIS INCIDENT WAS COMPLETELY OUT OF MY CONTROL. I HAVE HAD PROBLEMS ON THE PAST WITH THIS VEHICLE WITH SEVERE HESITATION. I HAVE ALSO HAD A HESITATION, FOLLOWED BY EXTREME ACCELERATION. I DID FILE A COMPLAINT PREVIOUSLY. THIS IS A VERY DANGEROUS CONDITION. IT COULD HAVE BEEN A CHILD LIFT INSTEAD OF A TRUCK. THE DEALER SAYS THEY CAN'T FIND A PROBLEM WITH MY CAR. THIS IS A SPORADIC OCCURRENCE, BUT IT SHOULDN'T HAPPEN AT ALL. *NM
Additional Summary:

Toyota ID No:
NHTSA ODI No: 10162857
Date of Incident: 20060611
Vehicle: 2003 TOYOTA COROLLA
Location of Incident: BURLINGTON, MA
NHTSA Summary:
2003 TOYOTA COROLLA LE REVVED UP WHEN BRAKES WERE APPLIED. *KB: THE CONSUMER HAD TO APPLY A GOOD AMOUNT OF PRESSURE TO THE PEDAL AND EVENTUALLY, HE SHIFTED THE GEAR INTO NEUTRAL. THE VEHICLE CAME TO A SAFE STOP AND THE VERY FAST IDLE WHICH MAY HAVE LASTED FOR 10 SECONDS HAD

RETURNED TO NORMAL. THE DEALER WAS UNABLE TO DUPLICATE WHAT THE CONSUMER HAD EXPERIENCED. *JB
Additional Summary:

Toyota ID No:
NHTSA ODI No: 10159876, 10159874
Date of Incident: 20060624
Vehicle: 2005 LEXUS ES330
Location of Incident: MIAMI, FL
NHTSA Summary:
DT*: THE CONTACT STATED THAT THE VEHICLE HESITATED WHILE THE ACCELERATOR PEDAL WAS INITIALLY DEPRESSED. THE VEHICLE HAS NOT BEEN INSPECTED BY A MECHANIC. UPDATED 7/5/2006 - THE VEHICLE WAS TAKEN TO THE DEALER AND THE CONSUMER WAS TOLD THAT THERE WAS NOTHING WRONG WITH THE VEHICLE. *NM
Additional Summary:

Toyota ID No:
NHTSA ODI No: 10160854
Date of Incident: 20060615
Vehicle: 2006 TOYOTA RAV4
Location of Incident: PLEASANTON, CA
NHTSA Summary:
ERRATIC ACCELERATION WHICH CREATES HAZARDOUS SITUATIONS, SOMETIMES VEHICLE CONTINUES TO ACCELERATE WHEN ACCELERATOR PEDAL IS DEPRESSED, CAUSING UNPREDICTABLE BEHAVIOR WHICH LEADS TO DANGEROUS SITUATIONS. SOMETIMES VEHICLE ACCELERATES VERY RAPIDLY WITH VERY LITTLE PRESSURE ON ACCELERATOR PEDAL, WHICH IS HARD TO CONTROL (STOP AND GO TRAFFIC.) ALMOST HIT A CAR IN FRONT OF ME SEVERAL TIMES. SOMETIMES PRESSING ACCELERATOR PEDAL HAS NO REACTION FOR 1 TO 2 SECONDS, WHICH MAKES IT DIFFICULT TO PREDICT VEHICLE BEHAVIOR WHEN MERGING TO FASTER TRAFFIC. *JB
Additional Summary:

Toyota ID No:
NHTSA ODI No: 10160064
Date of Incident: 20060617
Vehicle: 2006 TOYOTA RAV4
Location of Incident: WILMINGTON, NC
NHTSA Summary:
AS I STOPPED AT A TRAFFIC LIGHT THE ENGINE BEGAN RACING AND I ALMOST WAS FORCED INTO THE INTERSECTION INTO TRAFFIC. I HAD TO PUSH AS HARD AS I COULD ON THE BRAKE PEDAL TO PREVENT AN ACCIDENT. THIS IS THE 3RD TIME THAT HAS HAPPENED AND I AM VERY APPREHENSIVE ABOUT DRIVING THE VEHICLE. IT IS A 2006 TOYOTA RAV 4 SPORT.
Additional Summary:

Toyota ID No:
NHTSA ODI No: 10160264
Date of Incident: 20060619
Vehicle: 2005 TOYOTA CAMRY
Location of Incident: POTOMAC, MD
NHTSA Summary:

DT*: THE CONTACT STATED THAT THE BRAKE PEDAL AND THE ACCELERATOR WERE TOO CLOSE TOGETHER, AND THE BRAKE PEDAL MOVED DOWN TOO FAR. THE POSITION OF THE BRAKE PEDAL AND ACCELERATOR CAUSED A COLLISION WHILE BACKING OUT OF A PARKING SPOT. THE ACCELERATOR WAS ACCIDENTALLY DEPRESSED CAUSING THE VEHICLE TO INCREASE IN SPEED AND COLLIDE WITH ANOTHER PARKED VEHICLE WHICH SUBSEQUENTLY PUSHED THAT VEHICLE INTO A THIRD. THERE WERE NO INJURIES. A POLICE REPORT WAS FILED, AND THERE WERE NO MECHANICS CONSULTED.
Additional Summary:

Toyota ID No:
NHTSA ODI No: 10162030
Date of Incident: 20060622
Vehicle: 2006 TOYOTA RAV4
Location of Incident: POWAY, CA
NHTSA Summary:
2006 TOYOTA RAV4, SPORT, 4X4. SOMETIMES WHILE PUSHING DOWN THE GAS PEDAL, THE CAR WILL HESITATE FOR ABOUT 1 OR 2 SECONDS BEFORE SPEEDING FORWARD. THIS IS USUALLY WHEN AT A VERY SLOW SPEED, LESS THAN 15 MILES/HR. IT HAS BEEN MOST NOTICEABLE MAKING LEFT AND RIGHT HAND TURNS NOT FROM A FULL STOP. THE FORWARD ACCELERATION AFTER THE HESITATION IS VERY EXTREME, EVEN WHEN I AM NOT PRESSING THE GAS PEDAL HEAVILY. THIS DOES NOT OCCUR ALL THE TIME AND I HAVE NOT NOTICED A TREND OF WHEN IT DOES OR DOES NOT HAPPEN (E.G., WEATHER, TEMPERATURE OF CAR OR AIR). *NM
Additional Summary:

Toyota ID No:
NHTSA ODI No: 10160358
Date of Incident: 20060623
Vehicle: 2005 TOYOTA CAMRY
Location of Incident: NEW ORLEANS, LA
NHTSA Summary:
DT*: THE CONTACT STATED THAT THE VEHICLE SUDDENLY ACCELERATED UNCONTROLLABLY WHILE THE DRIVER'S FOOT WAS PLANTED ON THE BRAKE PEDAL. THE VEHICLE WAS IN THE PROCESS OF BEING PARKED WHEN THE INCIDENT OCCURRED. THE VEHICLE HIT A POLE AND STOPPED. THE DEALER WAS CONTACTED ON 06/26/06 AND COULD NOT DETERMINE WHY THIS PROBLEM OCCURRED.
Additional Summary:

Toyota ID No:
NHTSA ODI No:
Date of Incident: 20060625
Vehicle: 2004 LEXUS ES330
Location of Incident: SCRANTON, PA
NHTSA Summary:
Car was in the shop for a month. Came out of Price Shopper grocery store. Put in gear and it accelerated. Had foot on brake, car continued to accelerate. Swerved to avoid cars, hit a concrete curb, car spun and stopped. Police showed up and investigated. Was sent by mechanics for check. Went to Motor World Lexus -- Scranton car for 1 month. Claimed that the problem was due to the aftermarket floor mats. Requested report from Toyota - they refused. Got letter from Lexus that said that it was inspected by field tech and that electronics and mechanicals were examined - no DTC's or anything else. Floor mat was found on top of the standard mat. Toyota claimed that the mats were pushed forward causing the incident. No defect found.

Additional Summary:

Toyota ID No:
NHTSA ODI No: 10181035
Date of Incident: 20060826
Vehicle: 2004 TOYOTA HIGHLANDER
Location of Incident: STANARDSVILLE, VA
NHTSA Summary:
LET ME START BY SAYING I AM A DIE-HARD TOYOTA OWNER. MY CURRENT VEHICLE BEING THE 2ND TOYOTA WE OWN. I OWN A 2004 TOYOTA HIGHLANDER, VA, 5 SPEED AUTOMATIC WITH AWD. THIS VEHICLE HAS A VERY SERIOUS HESITATION PROBLEM WHICH IS DANGEROUS. UPON ACCELERATION FROM A STOP OR AT SPEED, THERE IS A VERY SERIOUS LAG IN THROTTLE RESPONSE. MANY TIMES LEAVING A STOP OR ACCELERATING FROM A SLOW SPEED I.E. PARKING LOT DRIVING, THE VEHICLE WILL LAG WITH NO RESPONSE, THEN LURCH & ACCELERATE SUDDENLY. MERGING INTO TRAFFIC, SAFE PASSING, STARTS AT LIGHTS AND SAFE DRIVING IN PARKING LOTS AND AROUND PEDESTRIANS CAN BE HAZARDOUS. THOUSANDS OF OWNERS ACROSS THE NATION ARE AFFECTED BY THIS DEFECT. FROM MY RECENT RESEARCH IT APPARENTLY IS NOT RESTRICTED TO THE HIGHLANDER, BUT AFFECTS MANY TOYOTA VEHICLES WITH "DRIVE BY WIRE" AS OPPOSED TO MECHANICAL TRANSMISSION & THROTTLE LINKAGE. I TOOK THE VEHICLE BACK TO THE DEALER RIGHT AFTER MY PURCHASE IN NOVEMBER OF 2004 AND WAS TOLD THEY COULD FIND NOTHING WRONG. NOW RECENT RESEARCH TELLS ME THEY WERE WELL AWARE OF THE PROBLEM AT THAT TIME. I LOVE TOYOTA BUT THESE METHODS OF DEALING WITH PROBLEMS LIKE THIS IS DECEPTIVE AT BEST AND JUST SHORY OF CRIMINAL AT WORST. PLEASE "GOOGLE" TOYOTA HIGHLANDER HESITATION PROBLEM AND ALSO VISIT TOMSRAOLUTIONS.COM FOR MORE EVIDENCE OF WHAT I AM TALKING ABOUT. TOYOTA HAS NOT DEVOTED ENOUGH RESOURCES TO THIS PROBLEM OR A PERMANENT FIX WOULD HAVE ALREADY BEEN DEVELOPED. PLEASE CONTACT TOYOTA AND URGE THEM TO TAKE CARE OF THIS MATTER WITH ALL THE THOUSANDS OF OWNERS ACROSS THE U.S. THAT ARE HAVING TO DEAL WITH THIS MATTER. I WILL BE FOLLOWING THIS MATTER WITH KEEN INTEREST TO SEE IF ANYTHING IS BEING DONE AND AM ADVISING ALL OF THE INFOS AS WELL AS MY STAFF AND FEDERAL REPRESENTATIVES. TOYOTA COMMANDS A PREMIUM PRICE FOR WHAT ARE OTHERWISE EXCEPTIONAL VEHICLES AND THESE CUSTOMERS AND THE NATIONS DRIVERS DESERVE A BETTER MORE RESPONSIBLE RESPONSE FROM TOYOTA. *NM
Additional Summary:

Toyota ID No:
NHTSA ODI No: 10240542
Date of Incident: 20060627
Vehicle: 2000 TOYOTA TACOMA
Location of Incident: SACRAMENTO, CA
NHTSA Summary:
MY 2000 TOYOTA TACOMA PRERUNNER WILL LUNGE FORWARD WHEN I AM STOPPED AND MY FOOT IS ON THE BREAK PEDAL. IT HAPPEN WHEN A/C IS ON. *TR
Additional Summary:

Toyota ID No:
NHTSA ODI No: 10162201
Date of Incident: 20060629
Vehicle: 2006 TOYOTA RAV4
Location of Incident: ASTORIA, NY

NHTSA Summary:
HESITATION PROBLEM - '06 RAV4 4 SPORT MODEL WHEN TRYING TO OVERTAKE, WHEN PRESSING THE PEDAL HARDER, ENGINE DIDN'T RESPOND RIGHT AWAY. *JB
Additional Summary:

Toyota ID No:
NHTSA ODI No: 10162411
Date of Incident: 20060702
Vehicle: 2004 TOYOTA CAMRY
Location of Incident: GREENSBORO, NC
NHTSA Summary:
DT*: THE CONTACT STATED THAT THE VEHICLE'S ACCELERATOR PEDAL STUCK AT 30 MPH WHILE BACKING UP INTO A PARKING SPACE AT A SERVICE STATION. THE CONTACT APPLIED THE BRAKES, BUT THE ACCELERATION CONTINUED. THE CONTACT STOMPED ON THE BRAKES, AND ACCIDENTLY SLIPPED OFF THE BRAKES ONTO THE ACCELERATOR BEFORE IMPACT. THE VEHICLE'S REAR END SLAMMED INTO A BUILDING AND THE DRIVER WAS INJURED. THERE WAS OVER $6000 DAMAGE TO THE VEHICLE.
Additional Summary:

Toyota ID No:
NHTSA ODI No: 10162603
Date of Incident: 20060704
Vehicle: 2002 TOYOTA CAMRY
Location of Incident: WASHINGTON, DC
NHTSA Summary:
DT*: THE CONTACT STATED THAT WHILE STARTING THE VEHICLE, THE VEHICLE IMMEDIATELY ACCELERATED WITHOUT EFFORT. THE VEHICLE CRASHED INTO THE HOUSE DUE TO UNWANTED ACCELERATION OF THE VEHICLE.
Additional Summary:

Toyota ID No:
NHTSA ODI No: 10164944
Date of Incident: 20060706
Vehicle: 2004 TOYOTA CAMRY SOLARA
Location of Incident: WILLOWBROOK, IL
NHTSA Summary:
DT: THE CONTACT STATED THE VEHICLE WAS PARKED IN THE GARAGE AND UPON PLACING THE VEHICLE IN REVERSE WITH THE BRAKE APPLIED, THE VEHICLE SUDDENLY LURCHED BACKWARDS AT HIGH SPEED AND CRASHED INTO ANOTHER VEHICLE. AFTER THE INITIAL CRASH, THE VEHICLE CONTINUED ACCELERATING IN REVERSE ACROSS THE STREET AND CRASHED INTO A NEIGHBORING HOUSE WHERE THE VEHICLE CAME TO A FINAL STOP. THE CONTACT WAS WEARING A SEAT BELT, BUT NO INJURIES WERE SUSTAINED. THERE WAS EXTENSIVE DAMAGE TO THE REAR OF THE VEHICLE. THE POLICE WERE ALERTED AND A REPORT WAS TAKEN. A FIELD TECHNICAL SPECIALIST FROM THE MANUFACTURER INSPECTED THE VEHICLE. THE REPRESENTATIVE WAS UNABLE TO DETERMINE ANY TYPE OF DEFECT OR FAILURE.
Additional Summary:

Toyota ID No:
NHTSA ODI No: 10193458, 10171185, 10161984
Date of Incident: 20060709

Vehicle: 2005 LEXUS ES
Location of Incident: NORTH CANTON, OH
NHTSA Summary:
ON SUNDAY JULY 9, 2006 AT APPROXIMATELY 3:30 P.M. I DECIDED TO STOP AT THE GROCERY STORE. I PULLED INTO THE PARKING LOT AND WAS DRIVING SLOWLY WITH MY FOOT ON THE BRAKE TO ENTER A PARKING SPACE. I TURNED LEFT AND EASED SLOWLY INTO THE PARKING SPACE WITH MY FOOT ON THE BRAKE BRINGING THE CAR TO A STOP. THE MOMENT I STOPPED I REACHED OVER TO PUT THE CAR IN PARK AND ALL OF A SUDDEN THE CAR SURGED ENOUGH TO MOVE THE FRONT WHEELS OVER THE CAR STOP IN AN INSTANT WITH MY FOOT STILL ON THE BRAKE. I WAS SHOCKED. WHY WAS THE CAR DOING THIS? I STILL HAD MY FOOT POSITIONED ON THE BRAKE AND PUSHED DOWN. THE CAR CONTINUED TO ACCELERATE, AND THE BACK TIRES CAME OVER THE CAR STOP. AT THIS POINT I REMOVED THE FOOT TOTALLY FROM THE BRAKE TO SEE IF THE ENGINE WOULD SLOW DOWN NATURALLY WITHOUT ANY ACTION AT ALL BY ME. THE ENGINE CONTINUED TO SURGE TOTALLY ON ITS OWN. I TRIED THE BRAKE AGAIN AND THE CAR STILL DID NOT STOP. AT THIS POINT I REALIZED THAT I WAS GOING TO GO INTO THE ROAD. I LOOKED RIGHT WAYS AND SAW A SILVER TOYOTA WITH A LADY DRIVING IT. A COLLISION THEN HAPPENED AND I JAMMED THE BRAKE ON AGAIN AND THE CAR FINALLY STOPPED. I WAS CITED FOR FAILURE TO CONTROL. MY BROTHER WORKED AT LEXUS. HE TOLD ME ANOTHER LADY HAD A SIMILAR ACCIDENT WHILE SHE WAS PULLING INTO THE GARAGE AND THE ENGINE SURGED AND SHE RAN INTO THE GARAGE DOOR. I DECIDED TO LOOK INTO IT FURTHER ON THE INTERNET WHEN I GOT HOME. THE INFORMATION I FOUND WAS UNBELIEVABLE. COMPLAINTS WERE STILL BEING MADE ON ONGOING BASIS. I WENT TO COURT FOR MY TICKET. I HAD TO HIRE AN ATTORNEY TO DEFEND MYSELF. THE CHARGES AGAINST ME WERE REDUCED TO DRIVING AN UNSAFE VEHICLE, AND I ENTERED A NO-CONTEST PLEA. I HAVE INCURRED PSYCHOLOGICAL TRAUMA AND OTHER PHYSICAL INJURIES AS A RESULT OF THIS ACCIDENT. I WOULD LIKE TO GET OUT OF MY LEASE WITH LEXUS. BUT LEXUS WON'T ALLOW IT. IF LEXUS ACKNOWLEDGES ANY PROBLEM WITH MY CAR, THEY WILL HAVE TO ACKNOWLEDGE ALL OF THE OTHER PROBLEMS REPORTED BY LEXUS DRIVERS. *AK, ON JULY 9, 2006 AT 3:00 P.M., I STOPPED AT FISHERS FOODS IN CANTON, OHIO. I PULLED INTO THE PARKING LOT FROM THE FRANKLIN SIDE OF FISHERS AND WAS DRIVING SLOWLY WITH MY FOOT ON THE BRAKE TO ENTER A PARKING SPACE. THE PARKING SPACE WAS LOCATED DIRECTLY ACROSS FROM THE ENTRANCE AND I TURNED LEFT AND EASED SLOWLY INTO THE SPACE WITH MY FOOT ON THE BRAKE BRINGING THE CAR TO A STOP. THE MOMENT I STOPPED, I REACHED OVER TO PUT THE CAR IN PARK AND ALL OF A SUDDEN, THE CAR ENGINE SURGED ENOUGH TO MOVE MY FRONT WHEELS OVER THE CAR STOP IN AN INSTANT WITH MY FOOT STILL ON THE BRAKE. I WAS TOTALLY SHOCKED. I STILL HAD MY FOOT POSITIONED ON THE BRAKE AND PUSHED DOWN. THE CAR CONTINUED TO ACCELERATE AND THE BACK TIRES CAME OVER THE CAR STOP. AT THIS POINT, I REMOVED MY FOOT TOTALLY FROM THE BRAKE TO SEE IF THE ENGINE WOULD SLOW DOWN NATURALLY WITHOUT ANY ACTION AT ALL BY ME. THE ENGINE CONTINUED TO SURGE JUST AS FAST TOTALLY ON ITS OWN. I TRIED THE BRAKE AGAIN AND THE CAR STILL DID NOT STOP. I LIFTED MY FOOT FROM THE BRAKE AGAIN AND AT THIS POINT REALIZED I WAS GOING TO GO INTO THE ROAD. I LOOKED TO THE LEFT AND SAW A CAR COMING DOWN THE ROAD A FAIR DISTANCE AWAY. I THEN LOOKED TO THE RIGHT AND SAW A SILVER TOYOTA WITH A LADY DRIVING IT. I KNEW I WAS GOING TO HIT HER. THE COLLISION HAPPENED AND I HIT THE BRAKE ON AGAIN AND THE CAR FINALLY STOPPED. THE POLICE CITED ME FOR FAILURE TO CONTROL. AS I WAS WAITING FOR MY HUSBAND TO PICK ME UP AFTER THE ACCIDENT, HE CALLED ME AND TOLD ME THAT HE HAD TALKED TO MY BROTHER AND THAT WHILE MY BROTHER WAS WORKING AT LEXUS, ANOTHER LADY HAD A SIMILAR ACCIDENT. ONLY HERS HAPPENED WHEN SHE WAS PULLING INTO HER GARAGE AND HER ENGINE SURGED AND HER CAR RAN INTO THE GARAGE DOOR. I THOUGHT THIS WAS KIND OF A BIG COINCIDENCE AND I DECIDED TO LOOK INTO IT FURTHER ON THE INTERNET WHEN I GOT HOME. THE INFORMATION I

FOUND OUT ABOUT WAS SHOCKING, UNBELIEVABLE, AND ALSO MADE ME VERY ANGRY. THE COMPLAINTS ARE STILL BEING MADE ON AN ONGOING BASIS. *JB
Additional Summary:

Toyota ID No:
NHTSA ODI No: 10163397
Date of Incident: 20060711
Vehicle: 2006 TOYOTA COROLLA
Location of Incident: EXETER, RI
NHTSA Summary:
MY WIFE WAS BEHIND THE WHEEL OF HER 2006 TOYOTA COROLLA LE AND WAS BACKING SLOWLY OUT OF A PARKING SPACE (HER FOOT WAS RESTING ON THE BRAKE PEDAL) WHEN SHE AND ANOTHER DRIVER BUMPED REAR BUMPERS (SPEED WAS ABOUT 2 MPH). MY WIFE SHIFTED THE TRANSMISSION INTO DRIVE. THE ENGINE RACED THE CAR LEADED FORWARD UP AND OVER A CEMENT PARKING CURB AND INTO A PLATE GLASS WINDOW OF A HEALTH SPA (YMCA). IT WAS A MIRACLE THAT NO ONE IN THE SPA WAS SERIOUSLY HURT. THE CAR WAS TOTALED. MY WIFE WAS DEVASTATED AND EMOTIONALLY A WRECK. THE CAR WAS INSPECTED FOR MECHANICAL DEFECTS BY A STATE INSPECTOR. NONE WERE FOUND. *NM
Additional Summary:

Toyota ID No:
NHTSA ODI No: 10164789
Date of Incident: 20060718
Vehicle: 2004 LEXUS ES
Location of Incident: DESOTO, TX
NHTSA Summary:
DT*: THE CONTACT STATED WHILE DRIVING 5 MPH IN A PARKING LOT, THE VEHICLE ACCELERATED FORWARD CRASHING INTO THE FRONT WINDOW OF A CREDIT UNION. THERE WERE NO INJURIES. THERE WAS PROPERTY DAMAGE AND A POLICE REPORT WAS FILED. PRIOR TO THE INCIDENT, THE TRANSMISSION WAS HESITATING AND LURCHING FORWARD. IN 2004, THE DEALERSHIP DETERMINED THERE WAS A COMPUTER PROBLEM WITH THE VEHICLE, HOWEVER THERE WERE NO REPAIRS PERFORMED TO FIX THE PROBLEM.
Additional Summary:

Toyota ID No:
NHTSA ODI No: 10164944
Date of Incident: 20060728
Vehicle: 2006 TOYOTA RAV4
Location of Incident: LIVONIA, MI
NHTSA Summary:
ACCELERATION STUMBLES & BOGS DOWN WHEN GAS PEDAL IS APPLIED. THIS SCENARIO OCCURS ALL THE TIME WHEN AFTER A NORMAL ACCELERATION IS PERFORMED AND A NEED ARISES TO ACCELERATE OCCURS. IF YOU DEPRESS ACCELERATOR IMMEDIATELY UPON TAKING OFF THIS DOES NOT OCCUR, BUT IT CAUSES YOU TO OVER CORRECT STUMBLING BY SPEEDING QUICKLY. IF YOU NEED TO ACCELERATE, THE ENGINE WILL NOT RESPOND TO A NORMAL DEPRESSION OF GAS PEDAL. YOU NEED TO DEPRESS IT QUICKLY TO CAUSE THE ENGINE TO GO INTO PASSING GEAR ETC. MY "AUTO WISE" SON HAS SUGGESTED THAT THE GAS PEDAL DRIVE BY WIRE SENSORS COULD BE FAILING OR BE BAD ETC. *NM
Additional Summary:

Toyota ID No:
NHTSA ODI No: 10164978
Date of Incident: 20060731
Vehicle: 2004 TOYOTA AVALON
Location of Incident: BANGOR, ME
NHTSA Summary:
NON-, 2006, GOING 25 MPH IN HEAVY TRAFFIC I HIT A POT HOLE AND THE CAR SUDDENLY ACCELERATED. I HAD MY FOOT ON THE BRAKE ALREADY AS THERE WAS A RED LIGHT AHEAD AND HAD TO USE EXTREME FORCE TO STOP THE CAR. I PUT IT IN NEUTAL AND IT STOPPED RACING. JULY 31, 2006 I WAS TRAVELING AT 75 MPH AND HEARD A NOISE AS IF THE CAR WAS RACING. IT WAS REGISTERING 5500 RPMS. I SLOWED TO 65-70 AND IT WENT DOWN TO 3000 RPMS. I GOT OFF AT THE NEXT EXIT AND WHEN I CAME TO A STOP IT RETURNED TO NORMAL. FOR THE NEXT HOUR I TRAVELED AT 75 WITH THE CAR REGISTERING APPROX 1050RPMS. JULY 31, TRAVELING APPROX. 25MPH IN HEAVY TRAFFIC I TRIED TO SLOW TO AVOID HITTING THE CAR IN FRONT OF ME AS IT TURNED RIGHT. IT WAS EXTREMELY DIFFICULT AND I WOULD HAVE HIT IT IF IT HADN'T TURNED. AGAIN I HAD TO USE SIGNIFICANT PRESSURE ON THE BRAKE TO BRING IT TO A STOP. AS IT CAME TO A STOP I NOTICED THAT IT WAS AT 2000 RPMS. WHEN IT WAS COMPLETELY STOPPED IT RETURNED TO A NORMAL 500-OR SO. AUGUST 2, 2006 AS I WAS ABOUT TO ASCEND A HILL, IT SUDDENLY ACCELERATED WITHOUT MY APPLYING MORE GAS, BUT RETURNED TO NORMAL WHEN I STEPPED ON THE GAS. I DIDN'T NOTICE THE RPM READING. TODAY I TRADED THE CAR IN, RATHER THAN RISK INJURY TO MYSELF OR OTHERS BY CONTINUING TO DRIVE IT. THE TOYOTA DEALER WAS PREVIOUSLY UNABLE TO DUPLICATE THE INCIDENTS OR FIND THE SOURCE OF THE PROBLEM. THE DEALER IS GOING TO TRY TO FIND THE PROBLEM
Additional Summary:

Toyota ID No:
NHTSA ODI No: 10164668
Date of Incident: 20060731
Vehicle: 2005 TOYOTA CAMRY
Location of Incident: NEW YORK, NY
NHTSA Summary:
DYP- THE CONTACT STATED UPON INITIAL ACCELERATION AT LOW SPEEDS ON A CITY STREET, THE VEHICLE LURCHED FORWARD STRIKING ANOTHER VEHICLE IN THE REAR END. DURING THE SUDDEN ACCELERATION, THE VEHICLE DID NOT RESPOND TO FIRM BRAKE PRESSURE. THERE WERE NO INJURIES BUT MINOR DAMAGE WAS SUSTAINED TO THE VEHICLE. THE POLICE WAS NOT CONTACTED AND NO REPORT WAS TAKEN. THE VEHICLE WAS NOT INSPECTED, BUT BOTH THE DEALER AND MANUFACTURER WERE CONTACTED.
Additional Summary:

Toyota ID No:
NHTSA ODI No: 10167132
Date of Incident: 20060606
Vehicle: 2006 TOYOTA RAV4
Location of Incident: HUNTINGTON, NY
NHTSA Summary:
I PURCHASED A 2006 TOYOTA RAV4 IN APRIL AND THE VEHICLE SEEMS TO HAVE AN ISSUE NO ONE WANTS TO ADDRESS. WE ON THE FORUMS CALL IT ERRATIC ACCELERATION. THE CAR USES SOME TYPE OF ELECTRONIC SENSORS TO DETERMINE

THE CHANGE IN GEARS WHEN ACCELERATING AND IT IS VERY ERRATIC. ONE TIME IT GOES SMOOTHLY AND ANOTHER IT TAKES OFF VERY DANGEROUS AND UNSTABLE. TOYOTA WONT ACKNOWLEDGE THIS ISSUE BUT 90% OF THE OWNERS WILL TESTIFY TO IT. TOYOTA NEEDS TO COME UP WITH A FIX BEFORE SOMEONE IS SERIOUSLY HURT. THIS HAPPENS EVERY TIME I DRIVE. * NM
Additional Summary:

Toyota ID No:
NHTSA ODI No: 10166085
Date of Incident: 20060417
Vehicle: 2006 TOYOTA RAV4
Location of Incident: FITZWILLIAM, NH
NHTSA Summary:
DYP- THE CONTACT STATED WHILE DRIVING 35MPH ON A CITY STREET, THE VEHICLE LURCHED FORWARD WITHOUT WARNING INTO THE RIGHT SIDE OF ANOTHER VEHICLE. THE CONTACT STOPPED THE SUDDEN ACCELERATION BY TURNING OFF THE IGNITION AND ENGAGING THE EMERGENCY PARK BRAKE. NO INJURIES WERE SUSTAINED. THERE WAS MODERATE DAMAGE TO EACH OF THE VEHICLES. THE POLICE WERE ON THE SCENE AND A REPORT WAS TAKEN. THE VEHICLE WAS TOWED TO A BODY SHOP TO AWAIT INSPECTION. THE MANUFACTURER WAS ALERTED.
Additional Summary:

Toyota ID No:
NHTSA ODI No: 10166872
Date of Incident: 20060819
Vehicle: 2001 TOYOTA HIGHLANDER
Location of Incident: SAN ANTONIO, TX
NHTSA Summary:
DYP- THE CONTACT STATED WHILE BRAKE PRESSURE WAS APPLIED AT 5 MPH INTO A PARKING SPACE, THE VEHICLE LURCHED FORWARD AND JUMPED OVER A CURB WITHOUT WARNING. THE CONTACT SHIFTED THE VEHICLE IN REVERSE AND THE VEHICLE SUDDENLY ACCELERATED BACKWARDS WHILE CONSTANT BRAKE PRESSURE WAS APPLIED. THE VEHICLE CRASHED INTO ANOTHER PARKED VEHICLE WHERE IT CAME TO A FINAL STOP. THE CONTACT WAS WEARING A SEAT BELT, BUT NO INJURIES WERE SUSTAINED. THERE WAS MODERATE DAMAGE TO THE REAR BUMPER AND RIGHT PASSENGER SIDE PANEL OF THE VEHICLE. THE POLICE WERE ALERTED AND A REPORT WAS TAKEN. THE VEHICLE WAS TOWED TO A DEALER WHO WAS UNABLE TO DUPLICATE THE PROBLEM. THE MANUFACTURER WAS ALERTED.
Additional Summary:

Toyota ID No:
NHTSA ODI No: 10294026
Date of Incident: 20060820
Vehicle: 2006 TOYOTA CAMRY
Location of Incident: STONE MOUNTAIN, GA
NHTSA Summary:
20% OCCASIONAL STICKING ON THE GAS PEDAL. INCREASED BY 2005 HAD SEVERAL MISHAPS. MY MECHANICS IN CHARLOTTE N.C. TRIED TO DO WHATEVER THEY COULD TO MAKE IT NOT STICK. IT WOULD NOT REALLY WORK, HOWEVER ONE OF THE MECHANIC PUT SOMETHING ON IT AND EVERY FEW MONTHS I WOULD GO BACK TO HIM. ONCE I WAS ON A BUSY STREET IN CHARLOTTE DOWNTOWN TRADE STREET. I PUT MY FOOT TO

ACCELERATE AND I THOUGHT I WAS GOING TO DIE THAT MOMENT. THE GAS PEDAL STUCK. GOD WAS WITH ME. *TR
Additional Summary:

Toyota ID No:
NHTSA ODI No: 10168128
Date of Incident: 20060921
Vehicle: 2006 TOYOTA CAMRY
Location of Incident: NORWALK, CT
NHTSA Summary:
DYP- THE CONTACT STATED WHILE APPLYING BRAKE PRESSURE AT 35 MPH ON A CITY STREET, THE VEHICLE SUDDENLY LURCHED FORWARD WITHOUT WARNING. THE CONTACT ENGAGED THE EMERGENCY BRAKE AND PLACED THE VEHICLE IN PARK WHICH STOPPED THE VEHICLE. THE VEHICLE WAS TOWED TO A DEALER WHO DETERMINED THE FLOOR MAT WAS PRESSED AGAINST THE ACCELERATOR PEDAL. ADDITIONALLY, THE VEHICLE WAS INSPECTED BY AN INDEPENDENT REPAIR SHOP THAT WAS UNABLE TO DUPLICATE THE PROBLEM. THE MANUFACTURER WAS NOT NOTIFIED. UPDATED 10/6/2006 - WHEN APPLYING THE BRAKES TO MAKE A LEFT TURN, THE CAR LURCHED FORWARD AND STARTED ACCELERATING. THE VEHICLE CONTINUED TO ACCELERATE UP TO 50 MPH. WHEN APPLYING THE BRAKE PEDAL NOTHING HAPPENED. WHEN PUTTING THE CAR IN PARK NOTHING HAPPENED. WHEN APPLYING THE EMERGENCY BRAKE THE CAR STARTED TO SLOW DOWN. THE VEHICLE CONTINUED ACCELERATING ON ITS OWN FOR ANOTHER FIVE HUNDRED FEET. THE TOW TRUCK OPERATOR ARRIVED AND CHECK THE FLOOR MATS, NOTING THERE WAS NOTHING WRONG WITH THE FLOOR MATS POSITIONING. THE VEHICLE WAS TAKEN TO THE DEALER WHO DETERMINED THAT THE FLOOR MAT BECAME STUCK UNDER THE ACCELERATOR. THE DEALER TRIMMED THE CARPET. *NM
Additional Summary:

Toyota ID No:
NHTSA ODI No: 10170165
Date of Incident: 20060921
Vehicle: 2004 LEXUS RX300H
Location of Incident: ENCINITAS, CA
NHTSA Summary:
2004 LEXUS RX300H REVVED AND RACED INTO ANOTHER VEHICLE WITHOUT WARNING. *TS THE CONSUMER CONTACTED THE MANUFACTURER ABOUT THE SUDDEN ACCELERATION. THE MANUFACTURER AGREED TO HAVE A DEALER INSPECT THE VEHICLE BUT MENTIONED THAT IT WOULD TAKE SIX WEEKS TO TWO MONTHS BEFORE IT COULD BE INSPECTED. NM
Additional Summary:

Toyota ID No:
NHTSA ODI No: 10166466
Date of Incident: 20060824
Vehicle: 2001 TOYOTA CAMRY
Location of Incident: SAN DIEGO, CA
NHTSA Summary:
DYP- THE CONTACT STATED THE VEHICLE BEGAN TO ACCELERATE ON ITS OWN WHILE STOPPED AT AN INTERSECTION. THE PROBLEM OCCURRED ON TWO SEPARATE OCCASIONS. THE VEHICLE WAS NOT TAKEN TO A SERVICE DEALER. UPDATED 9/11/2006 -

THE VEHICLE WAS TAKEN TO THE DEALER WERE, AT HIS REQUEST, THE CRUISE CONTROL MODULE WAS DISCONNECTED PERMANENTLY. *NM
Additional Summary:

Toyota ID No:
NHTSA ODI No: 10166497
Date of Incident: 20060824
Vehicle: 2006 TOYOTA RAV4
Location of Incident: CLACKAMAS, OR
NHTSA Summary:
MY 2006 TOYTOA RAV4 HAS DISPLAYED NON RESPONSIVE THROTTLE ON MANY OCCASIONS WHERE YOU GIVE IT GAS AND IT DOES NOTHING. THEN IT TAKES OFF LIKE A ROCKET. I HAVE NEARLY BEEN IN ACCIDENTS BECAUSE I PULL OUT FROM A STOP AND THE THROTTLE IS UNRESPONSIVE WHILE TRAFIC IS BRARING DOWN ON ME. *JB
Additional Summary:

Toyota ID No:
NHTSA ODI No: 10167016
Date of Incident: 20060828
Vehicle: 2002 LEXUS IS300
Location of Incident: QUINCY, CA
NHTSA Summary:
ON 8/28/06, AT APPROXIMATELY 8:50 AM I WAS DRIVING TO WORK ON A TWO LANE, LEVEL, STRAIGHT PAVED COUNTY ROAD. I WAS DRIVING MY 2002 LEXUS IS 300 THAT HAD JUST REACHED 26,000 MILES. THIS CAR HAS RECEIVED ALL REGULARLY SCHEDULED MAINTENANCE SERVICES FROM LEXUS OF RENO AND HAS NOT HAD ANY PROBLEMS WHATSOEVER. I AM THE ORIGINAL OWNER OF THIS VEHICLE. THE ROAD WAS CLEAR AND DRY. I WAS TRAVELING AT APPROXIMATELY 55 MPH WHEN I ACCELERATED TO PASS ANOTHER VEHICLE. AS I PASSED, MY CAR KEPT ON ACCELERATING EVEN AS I LET UP ON THE ACCELERATOR. I ATTEMPTED TO APPLY THE BRAKES. THE ENGINE ACCELERATION WAS SO POWERFUL, THE CAR DID NOT RESPOND WELL TO MY ATTEMPT TO BRAKE. SO I TOOK MY FOOT OFF THE BRAKE. THE SPEED ON THE DASHBOARD WAS 60 MPH AND ACCELERATING. I APPLIED THE BRAKES AGAIN WITH ALL THE STRENGTH I HAD AND WAS ABLE TO PULL THE CAR SAFELY OFF THE ROAD. THE ENGINE WAS RACING EVEN WHEN STOPPED. I MOVED THE SHIFT INTO PARK. EVEN IN PARK THE ENGINE WAS RACING. I TURNED THE ENGINE OFF. MY HUSBAND WAS FOLLOWING ME AND STOPPED. HE DROVE IT 1.5 MILES OUR OFFICE WITHOUT INCIDENT. I THEN CALLED THE RENO, NV LEXUS DEALERSHIP WHERE I PURCHASED THE CAR. THE HEAD OF THE SERVICE DEPARTMENT CALLED ME BACK AND SUGGESTED I HAVE THE CAR TOWED TO THE DEALERSHIP. I ASKED HIM IF HE WAS AWARE OF ANY OTHER RAPID ACCELERATION PROBLEMS WITH THESE VEHICLES AND HE SAID NO. HE SAID THE 4 YEAR WARRANTY WAS UP IN 2006 AND I WOULD HAVE TO PAY FOR ANY REPAIRS. THAT AFTERNOON I HAD THE CAR TOWED TO THE RENO LEXUS DEALERSHIP. ON THE EVENING OF 8/28/06 I SEARCHED THE INTERNET AND FOUND THAT THE NHTSA HAD INVESTIGATED 2002-2003 LEXUS IS 300 MODELS FOR FAULTY THROTTLES THAT MAY HAVE CAUSED RAPID ACCELERATION. SO FAR LEXUS HAS NOT ACKNOWLEDGED A PROBLEM. I SHARED WITH THE REP WHAT I HAD FOUND ON THE INTERNET RE: PROBLEMS WITH RAPID ACCELERATION AND THAT I WAS NOT PICKING THE CAR UP UNTIL LEXUS REPLACED THE THROTTLE. *JB
Additional Summary:

Toyota ID No:

NHTSA ODI No: 10170144
Date of Incident: 20080901
Vehicle: 2000 LEXUS LS400
Location of Incident: EDEN PRAIRIE, MN
NHTSA Summary:
2000 LEXUS LS400 LURCHED FORWARD NUMEROUS TIMES WHILE BRAKE PEDAL WAS DEPRESSED. *KB *NM
Additional Summary:

Toyota ID No:
NHTSA ODI No: 10192340
Date of Incident: 20060901
Vehicle: 2006 TOYOTA RAV4
Location of Incident: SUGAR GROVE, OH
NHTSA Summary:
HESITATES TO ACCELERATE. IT WOULD NOT GO OVER 20 MPH FOR OVER 2 MILES. I LIVE RIGHT OFF A MAJOR HIGHWAY, AND WHEN I TRY TO PULL ON HIGHWAY, CAR DOES NOT WANT TO GO. I HAD IT TO THE DEALER ABOUT 4 TIMES, BUT THEY COULD NOT GET IT TO GO. ONCE THEY CLAIMED IT WAS THEIR FOR MAT JAMMING UNDER THE GAS PEDAL. THEY KEPT IT FOR A WEEK AND FOUND NOTHING. ALSO, THEY LOOKED ON A WEBSITE AND FOUND NO OTHER COMPLAINTS. I AM VERY UNHAPPY. NOT SURE WHAT TO DO.*AK
Additional Summary:

Toyota ID No:
NHTSA ODI No: 10174731, 10176450
Date of Incident: 20060502
Vehicle: 2007 LEXUS RX350
Location of Incident: MILVINDALE, MI
NHTSA Summary:
WHILE TRAVELING NORTH BOUND AT APPROXIMATELY 55 MPH ON INTERSTATE I-75 / M-59 WITH IN OAKLAND COUNTY / STATE OF MICHIGAN MY AUTOMOBILE SUDDENLY ACCELERATED. AFTER ATTEMPTING TO APPLY THE AUTOMOBILE BRAKES, TO APPROXIMATELY 85 MPH. THIS SUDDEN UNWANTED ACCELERATION CAUSED THE VEHICLE TO CRASH INTO THE HIGHWAY GUARD RAIL AND GO INTO A ROLL OVER. AS A RESULT OF THE SUDDEN ACCELERATION AND ROLL OVER THE VEHICLE WAS DAMAGE BEYOND REPAIR AND I WAS INJURED WITH SERIOUS BACK, NECK AND PELVIC INJURIES. *CR, CONSUMER REQUEST FOR INVESTIGATION ON THE 2007 ES350 SPEED CONTROL. *TR THE CONSUMER STATED THE VEHICLE SUDDENLY ACCELERATED. AFTER ATTEMPTING TO APPLY THE BRAKES. THE UNWANTED ACCELERATION CAUSED THE VEHICLE TO CRASH INTO THE HIGHWAY GUARD RAIL AND CONSEQUENTLY THE VEHICLE ROLLED OVER. THE CONSUMER SUFFERED SERIOUS BACK, NECK AND PELVIC INJURIES. *JB UPDATE (FEBRUARY 21, 2007): MS. RODGERS SAID THAT SHE WAS TRAVELING ON I-75 FOR 15 MINUTES AND THE CRUISE CONTROL WAS NOT TURNED ON. SHE WAS MERGING ONTO ROUTE 59 AND APPLIED THE BRAKES. HOWEVER, THE VEHICLE NOT ONLY NOT SLOWED DOWN BUT ACTUALLY ACCELERATED TO WHAT SHE BELIEVE WAS 75-80 MPH. TO AVOID CRASHING THE VEHICLES AHEAD, SHE MOVED FROM THE RIGHT LANE TO THE LEFT LANE AND HIT THE GUARD RAIL. THE VEHICLE ROLLED OVER AND TOTALED. SHE WAS CITED BY THE POLICE BUT THE CITATION WAS LATER DISMISSED. TOYOTA SENT HER A LETTER SAYING THAT THEIR INVESTIGATION FOUND NOTHING WAS WRONG WITH THE VEHICLE. SEE ALSO 10174752 *DSY.
Additional Summary:

Toyota ID No:
NHTSA ODI No: 10181829
Date of Incident: 20060907
Vehicle: 2001 TOYOTA CAMRY
Location of Incident: LEWISVILLE, NC
NHTSA Summary:
SUDDEN ACCELERATION CAUSED OVER $9000 DAMAGE IN 17 FEET. I PUT CAR IN REVERSE AND IT STARTED REVVING UP. THEN THE CAR TOOK OFF BACKWARDS AND HIT A TREE, IMMEDIATELY AFTER HITTING TREE THE CAR LURCHED FORWARD AND HIT ANOTHER TREE TWICE. *JB
Additional Summary:

Toyota ID No:
NHTSA ODI No: 10177614
Date of Incident: 20060905
Vehicle: 2001 TOYOTA PRIUS
Location of Incident: HONEY BROOK, PA
NHTSA Summary:
TL*THE CONTACT OWNS A 2001 TOYOTA PRIUS. WHILE DRIVING BETWEEN 65-70 MPH, THE VEHICLE DID NOT RESPOND WHEN THE ACCELERATOR PEDAL WAS DEPRESSED. ALL OF THE INSTRUMENT PANEL INDICATORS ILLUMINATED AND THE ENGINE SUDDENLY STALLED. THE VEHICLE COASTED TO THE SIDE OF THE ROAD AND THE ENGINE FAILED TO RESTART. WHILE THE GEAR SHIFTER WAS PLACED IN PARK, THE VEHICLE ACCELERATED UNEXPECTEDLY AND CRASHED INTO A GUARDRAIL. THE DRIVER SUSTAINED A WHIPLASH AND A POLICE REPORT WAS FILED. THE VEHICLE SUSTAINED SEVERE DAMAGE AND WAS TOWED TO AN AUTHORIZED DEALER. THE VEHICLE WAS REPAIRED FOR BODY STRUCTURE DAMAGES. THE TECHNICIAN PERFORMED DIAGNOSTIC TESTS, BUT WAS UNABLE TO DUPLICATE THE FAILURES. THE VEHICLE WAS TAKEN BACK TO THE AUTHORIZED DEALER ON FIVE SEPARATE OCCASIONS FOR IDENTICAL FAILURES, BUT THERE WERE NO RESOLUTIONS. THE FAILURE MILEAGE WAS 42,000 AND CURRENT MILEAGE WAS 68,000.
Additional Summary:

Toyota ID No:
NHTSA ODI No: 10147760
Date of Incident: 20060909
Vehicle: 2006 TOYOTA RAV4
Location of Incident: REDONDO BEACH, CA
NHTSA Summary:
2006 TOYOTA RAV4 SPORT - INCONSISTENT THROTTLE, ACCELERATION DELAY. FROM A COASTING POSITION THERE IS A DELAY IN RESPONSE WHEN ENGAGING THE ACCELERATOR, USUALLY FOLLOWED BY A SUDDEN HIGH SPEED ACCELERATION. AT LOW SPEEDS THE ACCELERATOR IS HYPERSENSITIVE. IMPOSSIBLE TO PREDICT SUDDEN HIGH SPEED RESPONSES DESPITE MY BEST EFFORTS TO MODERATE AND CONTROL PEDAL PRESSURE. *NM
Additional Summary:

Toyota ID No:
NHTSA ODI No: 10177831
Date of Incident: 20060911
Vehicle: 2005 TOYOTA CAMRY

Location of Incident: HUNTSVILLE, AL
NHTSA Summary:
I WAS DRIVING SLOWLY THROUGH A PARKING LOT TO LOCATE A PARKING SPACE. AS I APPROACHED A SPACE, I HAD MY FOOT ON THE BRAKE. I EASED OFF OF THE BRAKE TO COAST INTO THE PARKING SPACE AND WAS MAKING A RIGHT TURN INTO THE SPACE. SUDDENLY THE VEHICLE SURGED FORWARD WITHOUT MY FOOT BEING ON THE ACCELERATOR. I APPLIED THE BRAKE, BUT THE VEHICLE CONTINUED TO MOVE FORWARD. MY CAR WENT OVER A CONCRETE MEDIAN, AND INTO A LANE OF TRAFFIC. MY CAR STRUCK TWO CARS. IT HIT ONE OF THE VEHICLES, AN SUV, WITH SUCH FORCE THAT IT KNOCKED THE SUV UP OVER A CURB INTO A GRASSY AREA. THOUGH I HAD BOTH FEET APPLYING THE BRAKES AS HARD AS I COULD, THE VEHICLE WOULD NOT STOP, AND THERE WAS NOT TIME FOR ME TO THINK TO TURN OFF THE IGNITION. MY CAR SUSTAINED SEVERE DAMAGE TO THE RIGHT AND LEFT SIDES AND TO THE FRONT. IT DAMAGED THE FRONT OF THE SUV AND THE REAR OF THE OTHER CAR. THERE WAS A PASSENGER IN EACH OF THE VEHICLE, AND I WAS THE ONLY OCCUPANT OF MY VEHICLE. FORTUNATELY, THERE WERE NO SERIOUS INJURIES. I HAD MY CAR TOWED TO THE TOYOTA DEALERSHIP. I REQUESTED A FACTORY REPRESENTATIVE INSPECT THE CAR. THEY COULD NOT DETERMINE A CAUSE FOR THE SUDDEN ACCELERATION. THE REPRESENTATIVES WERE QUITE HELPFUL UNTIL THE INSPECTION WAS COMPLETE. I REQUESTED A COPY OF THE REPORT OF THEIR FINDINGS, HOWEVER, TOYOTA CORPORATION WILL NOT ALLOW ME TO SEE A COPY OF THE REPORT. THEY SAID I COULD CONTACT THEIR LEGAL DEPARTMENT OR GET A SUBPOENA. THE CUSTOMER RELATIONS REPRESENTATIVE AT THE DEALERSHIP SUGGESTED I FILE A CLAIM FOR ARBITRATION. BUT THE NATIONAL CENTER FOR DISPUTE SETTLEMENT STATES THAT BECAUSE THE CAR WAS WRECKED, I DO NOT QUALIFY FOR ARBITRATION. MEANWHILE, I AM LEFT WITH A VEHICLE THAT I AM AFRAID TO DRIVE. *NM
Additional Summary:

Toyota ID No:
NHTSA ODI No: 10169781
Date of Incident: 20060916
Vehicle: 2006 TOYOTA CAMRY
Location of Incident: SALEM, NY
NHTSA Summary:
DT*: THE CONTACT STATED WHILE BACKING THE VEHICLE OUT OF A PARKING SPACE, WITH PRESSURE APPLIED TO THE ACCELERATOR, THE PEDAL PUSHED DOWN INTO THE FLOORBOARD AND THE VEHICLE SUDDENLY LURCHED BACKWARDS CRASHING INTO A TREE. NO INJURIES WERE SUSTAINED. THE OCCUPANTS WERE WEARING BELTED. TX THE VEHICLE SUSTAINED MINOR DAMAGE. THE POLICE WERE ON THE SCENE AND A REPORT WAS TAKEN. THE VEHICLE WAS TOWED TO THE DEALER TO AWAIT INSPECTION BY A FACTORY REPRESENTATIVE.
Additional Summary:

Toyota ID No:
NHTSA ODI No: 10163942
Date of Incident: 20060919
Vehicle: 2002 TOYOTA CAMRY
Location of Incident: BROOKLYN, NY
NHTSA Summary:
DT*: THE CONTACT STATED WHILE DRIVING 10 MPH IN A PARKING LOT AND ATTEMPTING TO MANEUVER INTO A PARKING SPACE THE VEHICLE ACCELERATED TO 30 MPH WITHOUT WARNING CRASHING INTO A POLE AND CAUSING DAMAGE TO A FENCE. THE AIR BAGS DID NOT DEPLOY. A POLICE REPORT WAS TAKEN AND THE DEALER WAS

NOTIFIED. THE VEHICLE WAS TOTALED BY THE INSURANCE COMPANY. UPDATED 10/13/06. *JB
Additional Summary:

Toyota ID No:
NHTSA ODI No: 10170761
Date of Incident: 20060920
Vehicle: 2002 TOYOTA CAMRY
Location of Incident: SOMERBRAY, PA
NHTSA Summary:
DRIVER CONCLUDED BUSINESS AT A DRIVE THROUGH ATM AT A LOCAL SHOPPING MALL. VEHICLE WAS SHIFTED INTO 'DRIVE' AND AT THAT INSTANT THE ENGINE STARTED RACING AT HIGH SPEED AND THE VEHICLE ACCELERATED RAPIDLY. THE DRIVER DEPRESSED THE BRAKE PEDAL, BUT THE VEHICLE WOULD NOT STOP. THE ENGINE WAS STILL RACING AT TOP SPEED AND THE VEHICLE WAS GAINING UP MOMENTUM. THE DRIVER PUMPED THE BRAKES SEVERAL TIMES, BUT NO FEEDBACK RESPONSE COULD BE FELT. THE RAPID, UNINTENDED ACCELERATION CAUSED THE VEHICLE TO TRAVEL ACROSS THE CENTERLINE AND INTO THE OPPOSITE DIRECTION OF TRAFFIC, WITH OPPOSING TRAFFIC APPROACHING THE DRIVER. TURNED THE VEHICLE SHARPLY TO THE RIGHT IN AN EFFORT TO AVOID A COLLISION. SEEING A NUMBER OF CARS STOPPED AT THE APPROACHING INTERSECTION TO THE MAIN ROAD, THE DRIVER CONTINUED TO STEER THE CAR HARD TO THE RIGHT. THE VEHICLE THEN WENT OVER AN EMBANKMENT AND STRUCK A STEEL LIGHT POLE RESULTING IN TOTAL LOSS OF THE VEHICLE AND SIGNIFICANT INJURIES TO THE DRIVER. TOTAL TRAVEL DISTANCE OF THE VEHICLE FROM ACCELERATION TO IMPACT WAS APPROXIMATELY 800 FEET. TOTAL INCIDENT TIME AND FINAL SPEED ARE UNCERTAIN. *NM
Additional Summary:

Toyota ID No:
NHTSA ODI No:
Date of Incident: 20061000
Vehicle: 2004 LEXUS ES330
Location of Incident: NEWTOWN, PA
NHTSA Summary:
October 2006 incident. Believe that he reported to NHTSA - Had carpeted mat.
My wife drove a lexus es330 2004. She was at a movie rental store and was leaving the parking lot. When she backed up she heard a bang noise and thought she hit something. That was not the case and when she started forward she car just took off picking up speed and heading toward a house. No matter how hard she hit the brake the car just kept going faster. At the last minute she turn left towards an alley and hit the concrete corner of a building. The police had to cut her out of the car and went to the hospital by ambulance. The car should have been totaled but they fix it and she refused to drive the car it drove fit. The dealership said driver error or mat on the floor and did not know of other problems with toyota. In fact the NHTSA said they had no details of this. The black box was removed by Toyota and said nothing found. We hired someone to check the box Toyota said we needed a lawyer to look into the box and the findings that all the data was erased. Now we come to find out alot of cars had the same experience. Please let me know who I can contact to add our case on file. We were deceived.
Additional Summary:

Toyota ID No:
NHTSA ODI No: 10191831
Date of Incident: 20061001
Vehicle: 2005 TOYOTA CAMRY

Location of Incident: NORTH WEST, DC
NHTSA Summary:
TL*THE CONTACT OWNS A 2005 TOYOTA CAMRY. THE CONTACT STATED THAT WHEN HE DEPRESSES THE BRAKE PEDAL, THE VEHICLE ACCELERATES INSTEAD OF STOPPING. THE CONTACT HAS TO REMOVE HIS FOOT FROM THE BRAKE PEDAL IN ORDER TO STOP THE ACCELERATION. THE FAILURE CAUSED THE VEHICLE TO CRASH INTO ANOTHER VEHICLE ON MAY 7, 2007. THE POLICE STATED THAT SINCE THE CRASH OCCURRED ON PRIVATE PROPERTY, THERE WAS NO NEED TO FILE A POLICE REPORT. THE MANUFACTURER HAS NOT BEEN NOTIFIED. THE CONTACT WAS REFERRED TO NHTSA BY THE REPAIR SHOP. THE ENGINE SIZE WAS UNKNOWN. THE CONSUMER PROVIDED PICTURES OF THE DAMAGED VEHICLE. UPDATED 06/08/07 *TR
Additional Summary:

Toyota ID No:
NHTSA ODI No: 10170237
Date of Incident: 20061007
Vehicle: 2004 TOYOTA CAMRY
Location of Incident: VISALIA, CA
NHTSA Summary:
I WAS ENTERING A PARKING SPACE. MY TOYOTA CAMRY (2004), HAD A SURGE OF ACCELERATION WHILE I WAS DEPRESSING THE BRAKE. IT WOULD NOT STOP CAUSING MY VEHICLE TO LUNGE FORWARD THROUGH A PARKING SIGN AND A CEMENT CURVE. THE AIR BAGS FAILED TO DEPLOY AT THE TIME TO CRASH. *NM
Additional Summary:

Toyota ID No:
NHTSA ODI No: 10181758
Date of Incident: 20061013
Vehicle: 2006 TOYOTA RAV4
Location of Incident: WOODINVILLE, WA
NHTSA Summary:
THE LAG AND/OR SUDDEN SURGING OF THE CAR UPON LIGHT ACCELERATION IS VERY DANGEROUS. WHILE ATTEMPTING TO MODERATELY ACCELERATE THE VEHICLE PAUSED, THEN DOWNSHIFT ACCELERATING MUCH FASTER THAN CONDITIONS PERMITTED. I NEARLY STRUCK ANOTHER VEHICLE BECAUSE I WAS UNPREPARED FOR THE CAR TO NOT FUNCTION IN A CONTROLLED MANNER. *NM
Additional Summary:

Toyota ID No:
NHTSA ODI No: 10170919
Date of Incident: 20061016
Vehicle: 2006 TOYOTA CAMRY
Location of Incident: MADISON, WI
NHTSA Summary:
DT*: THE CONTACT STATED THE VEHICLE EXCESSIVELY ACCELERATED WHILE BACKING OUT OF A PARKING SPACE AT 2 MPH. PRIOR TO THE INCIDENT, THE MOTOR WOULD ROAR UP WHEN PUT INTO GEAR AND WHEN THE GAS PEDAL WAS APPLIED. THE VEHICLE WAS TAKEN TO THE DEALER AND THE CONTACT WAS WAITING TO HEAR THE RESULTS OF THE EXAMINATION. THERE WAS AN ODI #10150319 THAT APPLIED TO THIS COMPLAINT PERTAINING TO THE VEHICLE SPEED CONTROL MODULE.
Additional Summary:

Toyota ID No:
NHTSA ODI No: 10171600
Date of Incident: 20061018
Vehicle: 2004 TOYOTA CAMRY
Location of Incident: YARDLEY, PA
NHTSA Summary:
THE VEHICLE IS A 2004 TOYOTA CAMRY. ON FOUR SEPARATE OCCASIONS, THE VEHICLE SURGED WHEN THE DRIVER DEPRESSED THE BRAKE PEDAL WITHOUT DEPRESSING THE ACCELERATOR PEDAL. THE TOYOTA DEALER INSPECTED THE VEHICLE AND REPORTED NO PROBLEMS. *NM
Additional Summary:

Toyota ID No:
NHTSA ODI No: 10171712
Date of Incident: 20061024
Vehicle: 2006 TOYOTA RAV4
Location of Incident: CONNELLY, NY
NHTSA Summary:
DT*: THE CONTACT STATED WHEN THE VEHICLE WAS NOT WARMED UP, THERE WAS LITTLE POWER WHEN ACCELERATING. THEN THE VEHICLE SURGED FORWARD EXTREMELY FAST. THE LAST OCCURRENCE HAPPENED WHILE DRIVING 20 MPH. THE VEHICLE WAS TAKEN TO THE SERVICE DEALER TWICE FOR THE PROBLEM AND THE MANUFACTURER WAS NOTIFIED.
Additional Summary:

Toyota ID No:
NHTSA ODI No: 10175862
Date of Incident: 20061031
Vehicle: 2003 TOYOTA CAMRY
Location of Incident: REDDING, CA
NHTSA Summary:
DT*: THE CONTACT STATED ON THREE SEPARATE OCCASIONS THE VEHICLE ACCELERATED WITHOUT WARNING WHEN PLACED INTO GEAR. THE VEHICLE WAS DRIVEN TO THE DEALER BOTH TIMES HOWEVER THE PROBLEM COULD NOT BE DUPLICATED. UPDATED 01/30/07. *JB
Additional Summary:

Toyota ID No:
NHTSA ODI No: 10172357
Date of Incident: 20061031
Vehicle: 2006 TOYOTA COROLLA
Location of Incident: BATON ROUGE, LA
NHTSA Summary:
DT*: THE CONTACT STATED WHILE DRIVING VARIOUS SPEEDS AND RELEASING THE ACCELERATOR PEDAL THE VEHICLE ONLY ALLOWED TO 30 MPH. ALSO, WHEN DEPRESSING THE BRAKE PEDAL THERE WAS A EXTENDED STOPPING DISTANCE. FURTHERMORE, THE ODOMETER HAD BECOME INOPERABLE. THE VEHICLE WAS DRIVEN TO THE DEALER WHERE THE CAUSE OF THE PROBLEMS COULD NOT BE DETERMINED.
Additional Summary:

Toyota ID No:
NHTSA ODI No: 10172372
Date of Incident: 20061031
Vehicle: 2006 TOYOTA RAV4
Location of Incident: GARRISON, NY
NHTSA Summary:
WE PURCHASED A 2006 TOYOTA RAV4 4X4 LIMITED IN MARCH 2006. SINCE THE DAY WE PURCHASED THE VEHICLE, WE HAVE HAD ISSUES WITH THE ACCELERATION EITHER NOT RESPONDING OR LURCHING FORWARD. WHEN TAKING OFF FROM A STOP, IT OCCASIONALLY TAKES THE CAR SEVERAL SECONDS TO ENGAGE AND ACCELERATE. OTHER TIMES, WHEN SLOWING DOWN TO STOP AT A LIGHT OR SIGN, THE CAR CONTINUES TO REV THE RPMs UP AND LURCHES FORWARD. IN ORDER TO STOP THE CAR FROM LURCHING FORWARD, WE HAVE TO PUT THE CAR IN NEUTRAL AND BEAM ON THE BREAKE. THIS IS VERY SCARY IF YOU ARE COMING UP TO AN ACTIVE INTERSECTION. FROM READING OTHER COMPLAINTS, TOYOTA NEEDS TO ADDRESS THIS ISSUE! *NM
Additional Summary:

Toyota ID No:
NHTSA ODI No: 10173039
Date of Incident: 20061101
Vehicle: 2002 TOYOTA CAMRY
Location of Incident: HOUSTON, TX
NHTSA Summary:
DT*: THE CONTACT STATED WHILE PARKING THE VEHICLE ON THE UPPER LEVEL OF A MULTI-LEVEL PARKING GARAGE, THE BRAKE PEDAL WAS DEPRESSED AND THE VEHICLE SURGED FORWARD, BREAKING THROUGH THE SAFETY CABLE AND DAMAGING THE BODY OF THE VEHICLE. THE VEHICLE WAS TAKEN TO A SERVICE DEALER, WHERE THE DEALER WAS UNABLE TO DUPLICATE OR DETERMINE THE CAUSE OF THE PROBLEM. UPDATED 12/5/2006. *NM
Additional Summary:

Toyota ID No:
NHTSA ODI No: 10192519
Date of Incident: 20061101
Vehicle: 2006 SCION XB
Location of Incident: ORLANDO, FL
NHTSA Summary:
TL*THE CONTACT OWNS A 2006 TOYOTA SCION XB. THE CONTACT STATED THAT THE VEHICLE ACCELERATED TO 10 MPH WITHOUT WARNING. THE DEALER WAS UNABLE TO DUPLICATE THE FAILURE. THE DEALER DID NOT MAKE ANY REPAIRS. THE CURRENT MILEAGE IS 18,000 AND FAILURE MILEAGE WAS 2,000.
Additional Summary:

Toyota ID No:
NHTSA ODI No: 10172626
Date of Incident: 20061106
Vehicle: 2000 TOYOTA CAMRY
Location of Incident: FARMIFPANY, NJ
NHTSA Summary:
TOYOTA CAMRY 2000 VIN#4T1BG22K0YU3XXXXX TODAY (11.04.06). WHILE DRIVING THIS CAR, ENGINE ACCELERATED WITHOUT FURTHER PUSHING GAS PEDDLE. I STOPPED THE

CAR AND SHIFTED THE GEAR TO PARKED MODE, STILL ENGINE WAS RUNNING AT MORE THAN 3000 RPM. I STOPPED THE ENGINE AND STARTED AGAIN. STILL ENGINE WAS RUNNING AT HIGH SPEED. WHILE CAR WAS STOPPED, I PUSHED THE GAS PEDDLE SEVERAL TIMES AND SHUTDOWN THE ENGINE. THEN ENGINE WAS RUNNING AT NORMAL SPEED. AFTER 1 HR, I OBSERVED THE SAME PROBLEM. PLEASE ADVISE ME IN THIS REGARD. THANK YOU. REGARDS, VENKATA. *NM
Additional Summary:

Toyota ID No:
NHTSA ODI No: 10176356
Date of Incident: 20061105
Vehicle: 2003 TOYOTA CAMRY
Location of Incident: MISSOURI CITY, TX
NHTSA Summary:
I WAS SLOWLY TURNING RIGHT TO PARK IN FRONT OF A STORE WITH MY FOOT ON THE BRAKES PREPARING TO STOP WHEN MY 2003 CAMRY ACCELERATED, JUMPED THE CURB AND CRASHED INTO A STOREFRONT WINDOW. *JB
Additional Summary:

Toyota ID No:
NHTSA ODI No: 10172402
Date of Incident: 20061105
Vehicle: 2006 TOYOTA TUNDRA
Location of Incident: CHESTER, VA
NHTSA Summary:
2006 TOYOTA TUNDRA WHEN CRUISE CONTROL IS ENGAGED, ANY HILL OR EVEN MINOR INCLINE INITIATES A DOWNSHIFT OF ONE OR TWO GEARS ACCOMPANIED BY FULL THROTTLE ACCELERATION. THIS DOES NOT OCCUR, EVEN ON MAJOR HILLS SANS CRUISE CONTROL. DEALER SAYS THIS IS NORMAL ACTION. SHOULD BE TAKEN BEFORE AN ACCIDENT/DEATH OCCURS.
Additional Summary:

Toyota ID No:
NHTSA ODI No: 10173575
Date of Incident: 20061110
Vehicle: 2004 TOYOTA HIGHLANDER
Location of Incident: PITTSBURGH, PA
NHTSA Summary:
DT*: THE CONTACT STATED AT VARIOUS SPEEDS, THE VEHICLE HESITATED WHEN THE ACCELERATOR PEDAL WAS DEPRESSED. ALSO, THE VEHICLE SHIFTED ERRATICALLY. THE DEALERSHIP HAS REPROGRAMMED THE COMPUTER MULTIPLE TIMES, BUT THE PROBLEM PERSISTED. *AK
Additional Summary:

Toyota ID No:
NHTSA ODI No: 10175179
Date of Incident: 20061115
Vehicle: 2004 TOYOTA CAMRY
Location of Incident: KNOXVILLE, TN
NHTSA Summary:

INT*- THE CONTACT STATED WHILE DRIVING 10 MPH IN THE RAIN, THE ACCELERATOR PEDAL BECAME STUCK, RAISING THE VEHICLE'S SPEED, AND CAUSING IT TO COLLIDE WITH 3 OTHER VEHICLES. IT WAS TOWED TO A SERVICE DEALER, WHO WAS UNABLE TO DETERMINE THE CAUSE OF THE PROBLEM. UPDATED 12/28/06. *JB
Additional Summary:

Toyota ID No:
NHTSA ODI No: 10179255
Date of Incident: 20061116
Vehicle: 2006 TOYOTA CAMRY SOLARA
Location of Incident: SAMMAMISH, WA
NHTSA Summary:
THROTTLE LAG AT LOW SPEED AND FROM STOP IS INCONSISTENT AND HAS BEEN THE CAUSE FOR SEVERAL CLOSE CALLS WHEN PULLING INTO TRAFFIC. MANUFACTURER WAS INFORMED. DEALER INVESTIGATED, STATES THIS IS NORMAL AND NOTHING CAN BE DONE, THAT LAG IS "ACCEPTABLE". SOME INSTANCES HAVE BEEN SEVERAL SECONDS BEFORE ACTUAL THROTTLE RESPONSE. DRIVER HAS TO USE HARDER ACCELERATION TO COMPENSATE WHEN THIS HAPPENS. THIS IS A SAFETY ISSUE THAT TOYOTA IS AWARE OF BUT DECLINES TO ADMIT IT IS A PROBLEM. DRIVER IS VERY CONCERNED THAT THIS ISSUE WILL BE CAUSE OF AN ACCIDENT. *NM
Additional Summary:

Toyota ID No:
NHTSA ODI No: 10174219
Date of Incident: 20061125
Vehicle: 2002 TOYOTA TUNDRA
Location of Incident: DENHAM SPRINGS, LA
NHTSA Summary:
MY SR TOYOTA TUNDRA WOULD SUDDENLY NOT IDLE ON ITS ON. THEN IT WOULD RUN NORMALLY. THIS HAS HAPPENED TWICE NOW. NOW I HAVE TO PUSH THE GAS PEDAL HALF WAY TO THE FLOOR TO GET ANY RESPONSE. IN RESEARCHING THE PROBLEM I DISCOVERED THAT THERE ARE A LOT OF PEOPLE HAVING THE SAME PROBLEM. IT IS ALL RELATED TO EITHER THE THROTTLE POSITION SENSOR OR THE THROTTLE LEVEL SENSOR. THESE PARTS COST AROUND $275 EACH. TOYOTA MECHANICS KNOW THERE IS A PROBLEM HERE BUT TOYOTA WILL DO NOTHING TO HELP. *JB
Additional Summary:

Toyota ID No:
NHTSA ODI No: 10174741
Date of Incident: 20061129
Vehicle: 2005 TOYOTA CAMRY
Location of Incident: RIVERSIDE, CA
NHTSA Summary:
THIS MAY BE A REPEAT COMPLAINT BECAUSE I FILLED THIS OUT EARLIER BUT MY COMPUTER CRASHED. MY MOTHER AND SISTER HAD A MINOR ACCIDENT TODAY (11/29/2006, 12:10 P.M.) IN WHICH OUR 2005 TOYOTA CAMRY SURGED FORWARD FROM ITS PARKING SPACE WHERE MY MOTHER HAD PULLED IN INTO THE OPPOSITE PARKING SPACE AND INTO A PARKED FORD EXPLORER SUV, KNOCKING OFF THE EXPLORER'S FRONT LICENSE PLATE COMPLETELY ONTO THE GROUND. MY SISTER SAID SHE LOOKED DOWN TO SEE IF MY MOTHER'S FOOT WAS ON THE ACCELERATOR AND IT WAS NOT. IT WAS ON THE BRAKE PEDAL. SHE HEARD MY MOTHER SAY "I CAN'T STOP!" AS SHE STOOD ON THE BRAKE PEDAL. THE CAR SURGED FORWARD INTO THE PARKED EXPLORER. ON

ITS OWN ACCELERATION. WE HAD A TOYOTA IN THE EARLY 1980'S AND HAD THIS EXACT PROBLEM RESULTING IN ANOTHER CRASH. THIS HAS BEEN A PROBLEM FOR TOYOTA SINCE THEN. TOYOTA SHOULD HAVE FIXED THIS PROBLEM OVER THE LAST 20+ YEARS. BACK THEN THERE WAS NO INTERNET TO FILL OUT IMMEDIATELY AFTER THE CRASH TO COMPLAIN. *JB
Additional Summary:

Toyota ID No:
NHTSA ODI No: 10175251
Date of Incident: 20061202
Vehicle: 2006 TOYOTA CAMRY
Location of Incident: WALPOLE, RI
NHTSA Summary:
DTP- THE CONTACT STATED THE HE WAS APPLYING THE BRAKE WHILE PULLING INTO A PARKING LOT WHEN THE VEHICLE LUNGED FORWARD. THE CONSUMER CONTINUED TO APPLY THE BRAKE BUT THE VEHICLE CONTINUED VERY SLOWLY FORWARD UNTIL IT WENT THROUGH A STORES GLASS WINDOW. THE POLICE DETERMINED THE CONTACT MUST HAVE ACCIDENTALLY DEPRESSED THE ACCELERATOR PEDAL, BUT THE CONTACT DENIED THE DETERMINATION. A POLICE REPORT WAS TAKEN, AND THE VEHICLE WAS NOT TAKEN TO A SERVICE DEALER.*AK UPDATED 12/28/2006 - THE AIR BAGS DID NOT DEPLOY. *SM
Additional Summary:

Toyota ID No:
NHTSA ODI No: 10175272
Date of Incident: 20061208
Vehicle: 2001 TOYOTA SEQUOIA
Location of Incident: AUSTIN, TX
NHTSA Summary:
2001 TOYOTA SEQUOIA. WHEN I SHIFTED FROM REVERSE TO DRIVE THE ENGINE ROARED TO A FULLY RACING ENGINE AND ACCELERATED FORWARD. HARD BRAKING COULD NOT SLOW THE VEHICLE AND IT HIT THE BACK OF A 2004 HONDA MINI-VAN THAT WAS PARKED. DOING EXTENSIVE DAMAGE BUT CAUSING NO INJURIES. *JB
Additional Summary:

Toyota ID No:
NHTSA ODI No: 10219086, 10220122
Date of Incident: 20061206
Vehicle: 2003 TOYOTA CAMRY
Location of Incident: ALPHARETTA, JOHNS CREEK, GA
NHTSA Summary:
TL*THE CONTACT OWNS A 2003 TOYOTA CAMRY. WHILE GOING FORWARD INTO THE GARAGE AT 1 MPH ON DECEMBER 6, 2006, THE VEHICLE LUNGED FORWARD AND CRASHED THROUGH A WALL, THE FREEZER, STOVE, KITCHEN CABINETS, DESK, TABLE, AND CHAIRS WERE DAMAGED. ON A SECOND OCCASION, THE VEHICLE LUNGED FORWARD, BUT NO CRASH OCCURRED. ON JUNE 15, 2007, THE VEHICLE ACCELERATED AND CRASHED INTO THE WALL OF A GROCERY STORE, CAUSING EXTENSIVE DAMAGE. THE DEALER HAD THE VEHICLE AFTER EACH FAILURE AND PERFORMED BODY WORK ON THE VEHICLE; HOWEVER, THE CONTACT DID NOT KNOW WHAT MECHANICAL WORK WAS PERFORMED. WHEN HE ASKED FOR THE PAPERWORK, HE WAS DENIED. THE POWERTRAIN WAS UNKNOWN. THE CURRENT AND FAILURE MILEAGES WERE 24,000.

UPDATED 03/18/08 *DF THE CONSUMER STATED AIRBAGS NEVER DEPLOYED IN BOTH CRASHES. UPDATED 03/13/08 *TR
Additional Summary:

Toyota ID No:
NHTSA ODI No: 10175687
Date of Incident: 20061206
Vehicle: 2002 TOYOTA CAMRY
Location of Incident: LITTLE ROCK, AR
NHTSA Summary:
WE OWN A 2002 TOYOTA CAMRY. LAST NIGHT MY WIFE, SON AND A FRIEND WERE SITTING AT A STOP LIGHT BEHIND ANOTHER CAR. WITH MY WIFE'S FOOT ON THE BRAKE, THE CAR REVVED UP AND LUNGED INTO THE BACK OF THE CAR IN FRONT OF HER. IMMEDIATELY AFTER HITTING HER ONCE, THE ENGINE REVVED UP EVEN HIGHER AND ACCELERATED INTO THE CAR AGAIN. HAD SHE BEEN FIRST IN LINE AT THE LIGHT, SHE WOULD HAVE BEEN THROWN INTO THE MIDDLE OF A BUSY FOUR LANE INTERSECTION AND MIGHT POSSIBLY NOT BE HERE TODAY. IF YOU HAVE ANY MORE INFO ON THIS, COULD YOU PLEASE SEND IT TO ME OR TELL ME WHERE IT COULD BE FOUND. *JB
Additional Summary:

Toyota ID No:
NHTSA ODI No: 10250344
Date of Incident: 20061200
Vehicle: 2006 TOYOTA SIENNA
Location of Incident: THORNTON, CO
NHTSA Summary:
MY 2006 TOYOTA SIENNA'S ACCELERATOR GETS STUCK IN THE ACCELERATION POSITION. I WAS ENTERING THE HIGHWAY SO I WAS QUICKLY ACCELERATING TO MERGE WITH TRAFFIC AND ONCE I MERGED WITH TRAFFIC I RELEASED THE ACCELERATOR PEDAL TO ADJUST MY SPEED AND THE PEDAL REMAINED IN ACCELERATION MODE AND I WAS UNABLE TO STOP IT. I TRIED PRESSING THE BRAKE PEDAL TO STOP OR DECREASE THE ACCELERATION AND THAT DIDN'T WORK. I TRIED DEPRESSING THE ACCELERATOR PEDAL AGAIN TO SEE IF IT WAS STUCK, AND THAT DIDN'T WORK. EVENTUALLY THE ACCELERATION STOPPED ON ITS OWN. THIS HAS HAPPENED TO ME TWICE AND MY HUSBAND ONCE. SO FAR THIS HAS OCCURRED THREE TIMES SINCE WE'VE HAD THE VEHICLE. I TOOK IT INTO A TOYOTA DEALER WHERE THEY RECORDED MY ISSUE ON THE SERVICE INVOICE ON 03/07/07 AND WERE UNABLE TO DUPLICATE THE ISSUE AND REMARKED THAT MY FLOOR MATS WERE VERY DOWN AND THAT I SHOULD INSTALL THEM PROPERLY. *TR
Additional Summary:

Toyota ID No:
NHTSA ODI No: 10179120
Date of Incident: 20061211
Vehicle: 2006 TOYOTA SEQUOIA
Location of Incident: TUCSON, AZ
NHTSA Summary:
UNEXPLAINED ACCELERATION AT SLOW SPEED. ONCE WHEN TRYING TO PARK, VEHICLE ACCELERATED AND WENT OVER CURB AND INTO DITCH. ANOTHER TIME WHEN STARTING OUT FROM A STOP SIGN. TOOK TO DEALER AND THEY COULD NOT FIND ANY PROBLEMS WITH VEHICLE. *NM
Additional Summary:

Toyota ID No:
NHTSA ODI No: 10214759
Date of Incident: 20061216
Vehicle: 2004 TOYOTA CAMRY
Location of Incident: HOUSTON, TX
NHTSA Summary:
TL*THE CONTACT OWNS A 2004 TOYOTA CAMRY. IN AN ATTEMPT TO PARK THE VEHICLE, IT SURGED FORWARD AND STRUCK A POST. THE CONTACT PLACED HER FOOT ON THE BRAKE PEDAL, SHIFTED INTO REVERSE, AND RELEASED THE BRAKE WHEN THE VEHICLE ACCELERATED BACKWARDS, MISESWIPED A VEHICLE, JUMPED A CURVE, AND STRUCK ANOTHER VEHICLE BEFORE COMING TO A STOP. THE FRONT PASSENGER SUSTAINED HEAD INJURIES AND THE VEHICLE SUSTAINED APPROXIMATELY $9,000 WORTH OF DAMAGES. A POLICE REPORT WAS FILED. THE SPEED WAS UNKNOWN. THE CURRENT AND FAILURE MILEAGES WERE 45,606.
Additional Summary:

Toyota ID No:
NHTSA ODI No: 10250632
Date of Incident: 20061219
Vehicle: 2003 TOYOTA CAMRY
Location of Incident: HOUSTON, TX
NHTSA Summary:
FIRST, LET ME SAY THAT I AM AND REMAIN A SATISFIED TOYOTA CUSTOMER. HOWEVER, I HAVE EXPERIENCED THE "STUCK ACCELERATOR" TYPE OF INCIDENT IN MY 2003 CAMRY ON NUMEROUS OCCASIONS. AT FIRST, I CONSIDERED IT TO BE SOME SORT OF RARE EVENT. IT DID SEEM TO ME THAT THE FLOOR MAT AND THE ACCELERATOR PEDAL WERE SOMEHOW TAMPERED WHEN THAT HAPPENED. CURRENTLY, WITH THE NEWS ABOUT OTHERS HAVING THE SAME EXPERIENCE, WITH NEWER MODELS OF CAMRY, I WANT TO ALERT NHTSA THAT THE PROBLEM MAY EXIST IN MODEL YEARS AS FAR BACK AS 2003. *TR NORMAN P CARNAHAN, PE, PHD
Additional Summary:

Toyota ID No:
NHTSA ODI No: 10178672
Date of Incident: 20061220
Vehicle: 2002 TOYOTA AVALON
Location of Incident: WALNUT CREEK, CA
NHTSA Summary:
THE CARS WOULD ACCELERATE WITHOUT INPUT FROM THE DRIVER. *NM
Additional Summary:

Toyota ID No:
NHTSA ODI No: 10177959
Date of Incident: 20061223
Vehicle: 2005 TOYOTA CAMRY
Location of Incident: BLACKSBURG, VA
NHTSA Summary:
ON DEC. 23, 2006, AROUND 11:20 AM, I WAS DRIVING AT ABOUT 5 MPH IN A PARKING LOT. AS I MADE A SLIGHT TURN TO THE LEFT TO STRAIGHTEN OUT, THE CAR SUDDENLY ACCELERATED AND HIT A PARKED CAR. THE BRAKES DID NOT WORK, EVEN WHEN

FLOORED. THE CAR WOULD NOT STOP UNTIL IT PUSHED ANOTHER CAR UP ONTO THE SIDEWALK AND ITS WHEELS BUMPED UP AGAINST THE CURB. THE CAR WAS EVENTUALLY STOPPED BY TURNING OFF THE ENGINE USING THE KEY IN THE IGNITION. (TAKING MY FOOT OFF THE BRAKE PEDAL SEEMED TO MAKE IT GO FASTER.) THE WEATHER WAS SUNNY, BUT THE CAR HAD BEEN PARKED OUTSIDE IN THE RAIN THE TWO PREVIOUS DAYS. I HAD NOT USED THE CRUISE CONTROL ANYTIME RECENTLY BEFORE THE INCIDENT. WE HAVE NOT HAD ANY PROBLEMS WITH THIS CAR, ALTHOUGH OCCASIONALLY, THE RADIO TURNS HAS TURNED ITSELF ON WHILE WE WERE DRIVING. *NM

Additional Summary:

Toyota ID No:
NHTSA ODI No:
Date of Incident: 20061233
Vehicle: 2005 LEXUS ES 330
Location of Incident: SAN DIEGO, CA
NHTSA Summary:
They were leaving Parkway Plaza parking lot. Husband was driving out of parking lot. Tried to avoid cars and pedestrians. Husband was trying to brake and trying to lift accelerator with foot. Hit about three or four cars and one bus/van, which finally stopped the car. Police and fire department came. Husband turned car back on and was unable to replicate. Car towed away. Wife called doctor and said she thought accelerator got stuck.
People in last vehicle hit had some injuries - not sure of extent - not seriously injured
Approx. $14k in body work done. After the body work was done, brought car home, and it leaped into the garage. Called Kenny Mesa Lexus. Spoke with service manager Daniel Byrne. Said the car leaped. Dealer said if they brought the car on the lot he would call the police. He said he didn't want anything to do with their car. Might not visit there anyone.
No rubber mats in her car. Traded it in shortly after bringing in garage.
Additional Summary:

Toyota ID No:
NHTSA ODI No: 10295196
Date of Incident: 20061215
Vehicle: 2001 TOYOTA CAMRY
Location of Incident: VALENCIA, CA
NHTSA Summary:
TL* THE CONTACT OWNS A 2001 TOYOTA CAMRY. THE ACCELERATOR PEDAL WOULD BECOME STUCK DUE TO THE ENTRAPMENT OF THE FLOOR MAT. SHE USUALLY HAS TO MANUALLY REMOVE THE FLOOR-MAT TO PREVENT A CATASTROPHIC FAILURE. THE FAILURE OCCURRED EVERY TIME SHE OPERATED THE VEHICLE. THE VEHICLE WAS TAKEN TO THE DEALER. THE TECHNICIAN STATED THAT SINCE HER VEHICLE WAS NOT INCLUDED IN RECALL NUMBER 99V180000 (VEHICLE SPEED CONTROL/ACCELERATOR PEDAL), SHE WAS INELIGIBLE FOR A FREE REMEDY. SHE CALLED THE MANUFACTURER, BUT COULD NOT REACH A REPRESENTATIVE. NO REPAIRS WERE MADE, BUT SHE WAS IN THE PROCESS OF REMOVING THE FLOOR-MAT. THE FAILURE MILEAGE WAS APPROXIMATELY 110,000. THE CURRENT MILEAGE WAS APPROXIMATELY 163,000.
Additional Summary:

Toyota ID No:
NHTSA ODI No: 10177184
Date of Incident: 20061226
Vehicle: 2006 TOYOTA TUNDRA

Location of Incident: MOUN MORRIS, NY
NHTSA Summary:
WITH CRUISE CONTROL ENGAGED AT 55 MPH ANY INCREASE IN INCLINE WILL INITIATE A ONE OR TWO GEAR DOWNSHIFT AND SUBSTANTIAL THROTTLE APPLICATION. ALSO WHEN IN CRUISE CONTROL USING HAND CONTROL STALK TO INCREASE SPEED SLIGHTLY WILL INITIATE A ONE OR TWO GEAR DOWNSHIFT AND SUBSTANTIAL THROTTLE APPLICATION. BOTH OF THESE SITUATIONS CAN STARTLE THE DRIVER BECAUSE OF THE ABRUPT CHANGES AND COULD CAUSE AN ACCIDENT LEADING TO INJURY/DEATH. *JB
Additional Summary:

Toyota ID No:
NHTSA ODI No: 10179165
Date of Incident: 20061227
Vehicle: 2004 TOYOTA RAV4
Location of Incident: BROOKLYN, NY
NHTSA Summary:
TL* THE CONTACT STATED THAT HIS 2006 TOYOTA RAV4 ACCELERATED WHILE HIS FOOT WAS ON THE BRAKE. THE CONTACT TOOK THE VEHICLE TO DEALER AND THE COMPUTER WAS REPLACED. ON 12/27/06 THE CONTACT STATED HE WAS INVOLVED IN AN ACCIDENT. WHILE HIS FOOT WAS ON THE BRAKE AND HE WAS STOPPED AT A LIGHT, THE VEHICLE LURCHED FORWARD AND STRUCK THE VEHICLE IN FRONT OF HIM. THE CONTACT HEARD A LOUD NOISE BEFORE THE INCIDENT. THE FAILURE MILEAGE ON THE VEHICLE WAS 50000. THE CONTACT WAS ABLE TO DRIVE THE VEHICLE. THERE WAS DAMAGE TO THE FRONT OF THE VEHICLE. THE DEALER TOLD THE CONTACT THAT THE FRONT END DAMAGE WILL NEED TO BE REPAIRED BEFORE THEY CAN DIAGNOSE ERRORS IN THE COMPUTER. THE CONTACT HAS A POLICE REPORT AND A REPAIR INVOICE FROM THE FIRST INCIDENT. *NM WHEN MAKING TURNS LEFT OR RIGHT THE CONSUMER INDICATED THAT THE STEERING WHEEL FELT HARD. THE DEALER ORDERED A POWER STEERING COMPUTER. *NM UPDATED 02/16/07 *JB
Additional Summary:

Toyota ID No:
NHTSA ODI No: 10204341
Date of Incident: 20061220
Vehicle: 2006 LEXUS GS400
Location of Incident: LEESBURG, IN
NHTSA Summary:
UNCONTROLLED ACCELERATION OF A 2006 LEXUS GS 400 OCCURRED DURING OVERTAKING OF ANOTHER VEHICLE ON A TWO LANE US HIGHWAY. CAR WAS TOWED TO A LEXUS DEALER (LEXUS OF FT. WAYNE INDIANA) WHERE IT WAS DETERMINED THAT THE DRIVER'S FLOOR MAT WAS JAMMED AGAINST THE ACCELERATOR PEDAL. THE DEALER STATED THAT THIS WAS THE ONLY CASE OF THIS TO THEIR KNOWLEDGE. AFTER SEEING THE NHTSA REPORT OF RECALL REGARDING DIFFERENT LEXUS VEHICLES WITH THE SAME PROBLEM I SUSPECT THAT NHTSA HAS NOT BEEN INFORMED OF THE POTENTIAL FOR THE PROBLEM TO BE MORE WIDESPREAD, POTENTIALLY REQUIRING A BROADER RECALL EFFORT. THE DATE OF THE INCIDENT (12/20/06) IS APPROXIMATE. I WOULD EXPECT THAT THE EXACT DATE IS AVAILABLE FROM THE DEALER. THE INFORMATION UNDER "EQUIPMENT" IS NOT ACCURATE AS THE CHOICES MAKE NO SENSE. *TB
Additional Summary:

Toyota ID No:

NHTSA ODI No: 10179465
Date of Incident: 20061210
Vehicle: 2002 TOYOTA CAMRY
Location of Incident: MOUNTAIN HOME, AR
NHTSA Summary:
TL* - WHILE BACKING UP OUT OF A PARKING LOT THE 2002 TOYOTA CAMRY SUDDENLY ACCELERATED. THE CONTACT APPLIED THE BRAKE WITH FULL FORCE IN ORDER TO STOP VEHICLE FROM ACCELERATING INTO A WALL. THE CONTACT TOOK VEHICLE INTO THE LOCAL MECHANIC AND THE MECHANIC REPLACED THE ACCELERATOR POSITION SENSOR. THE CURRENT MILEAGE IS 71265 AND THE FAILURE MILEAGE IS 71260 *AK
Additional Summary:

Toyota ID No:
NHTSA ODI No: 10200693
Date of Incident: 20070107
Vehicle: 2007 LEXUS GS350
Location of Incident: SCHERTZ, TX
NHTSA Summary:
TL *THE CONTACT OWNS A 2007 LEXUS GS350. WHILE PARKED, THE VEHICLE SUDDENLY ACCELERATED AND CRASHED INTO A BRICK WALL, WITHOUT ANY PRESSURE TO THE ACCELERATOR PEDAL. THE DEALER WAS UNABLE TO DETERMINE THE CAUSE OF FAILURE. THE CURRENT MILEAGE WAS 4,000 AND FAILURE MILEAGE WAS 200.
Additional Summary:

Toyota ID No:
NHTSA ODI No: 10170185
Date of Incident: 20070108
Vehicle: 2006 TOYOTA CAMRY
Location of Incident: CLEVELAND, OH
NHTSA Summary:
TL* - THE CONTACT STATED THE VEHICLE ACCELERATED UNEXPECTEDLY WHILE DRIVING. THE CONTACT STATED THAT MOST OF THE INCIDENTS OCCURRED WHILE THE HE WAS PULLING INTO A PARKING SPACE. THE CONTACT STATED THE HE HAD FOUR MINOR CRASHES DUE TO THE VEHICLE ACCELERATING. IN THE LATEST INCIDENT THE VEHICLE ACCELERATED ACROSS A FIVE LANE HIGHWAY AND CRASHED INTO A UTILITY POLE. THE WEATHER CONDITIONS WERE DRY, AND WAS NOT AWARE OF THE VEHICLES SPEED. THE DRIVER WAS INJURED, AND TAKEN IN AN AMBULANCE TO THE HOSPITAL. THE DRIVER SUSTAINED BURNS FROM THE SEAT BELTS. THE AIR BAGS DID NOT DEPLOY. THE CONTACT STATED THAT HE HAD PREVIOUSLY TAKEN THE VEHICLE TO THE DEALER, AND THEY COULD NOT FIND ANYTHING WRONG. THE CONTACT HAS THE REPAIR ORDER, AND THE POLICE REPORT. *AK UPDATED 02/06/07 *JB
Additional Summary:

Toyota ID No:
NHTSA ODI No: 10146765
Date of Incident: 20070120
Vehicle: 2005 TOYOTA TUNDRA
Location of Incident: SPARKS, MD
NHTSA Summary:
TL* THE CONTACT STATED THAT ON TWO SEPARATE OCCASIONS WHILE DRIVING THE 2005 TOYOTA TUNDRA WITH 28,000 FAILURE MILEAGE THE VEHICLE LURCHED FORWARD WITH HIS FOOT DEPRESSED ON THE BRAKE PEDAL. THE IGNITION HAD TO BE TURNED

OFF TO STOP THE VEHICLE. THE VEHICLE WAS TAKEN TO A DEALER, AND THEY FOUND NOTHING WRONG. THE CONTACT RECEIVED RECALL 03V123000 PERTAINING TO VEHICLES WITH DEAD EXHAUST. *AK
Additional Summary:

Toyota ID No:
NHTSA ODI No: 10161057
Date of Incident: 20070126
Vehicle: 2006 TOYOTA RAV4
Location of Incident: FALMOUTH, MA
NHTSA Summary:
I WAS DRIVING MY 2006 TOYOTA RAV4 WHEN I APPLIED THE BRAKES FROM ABOUT 25 MPH TO STOP FOR TRAFFIC AT A LIGHT. AS I APPLIED THE BRAKE THE ENGINE ACCELERATED AND I HAD TO STAND HARD ON THE BRAKE TO KEEP FROM HITTING THE CAR IN FRONT OF ME. AFTER A FEW SECONDS THE ENGINE SPEED CAME BACK TO NORMAL. AT THAT TIME I DOUBLE CHECKED MY FOOT POSITION ON THE BRAKE PEDAL AND AM CONFIDENT THAT I WAS IN NO WAY CONTACTING THE ACCELERATOR PEDAL. *JB
Additional Summary:

Toyota ID No:
NHTSA ODI No: 10283754
Date of Incident: 20070127
Vehicle: 2005 TOYOTA CAMRY
Location of Incident: GREENSBURG, LA
NHTSA Summary:
I WAS ENTERING A CAR WASH ON HWY51 IN AMITE CITY, LA. I LIGHTLY TAPPED THE ACCELERATOR. THE CAR LUNGED FORWARD AS IF I HAD STOMPED THE ACCELERATOR. I TOOK MY FOOT OFF THE GAS. IT CONTINUED TO ACCELERATE AS QUICKLY AS POSSIBLE. I USED TO BRAKES WITH NO RESULTS. I PUT MY FULL WEIGHT ON THE BRAKES WITH NO RESULTS. I WAS TERRIFIED AS I ZOOMED OUT OF THE CAR WASH AND INTO AN AREA WHERE THERE IS HEAVY PEDESTRIAN AS WELL AS VEHICULAR TRAFFIC. I COULD TELL THAT I WAS GOING AS FAST AS THE CAR WOULD GO. I QUICKLY SCANNED THE AREA AND SAW THAT NO ONE WAS DIRECTLY IN FRONT OF ME. I CROSSED THE SIDEWALK, PINE STREET AND THE PARKING LOT OF A CONVENIENCE STORE. I HIT A TELEPHONE POLL, AN IRON POLL AND A LARGE POLL ON A SIGN FOR GAS. BOTH MY LEGS WERE BROKEN. BOTH BONES WERE BROKEN JUST ABOVE THE ANKLE ON THE LEFT LEG. THE LARGE BONE WAS BROKEN JUST BELOW THE KNEE ON THE RIGHT LEG. I STILL HAVE PROBLEMS WITH BOTH. MY DAUGHTER WAS DYING WITH CANCER. I WAS IN THE HOSPITAL, LATER REHAB, THEN A NURSING HOME WHILE I RECUPERATED. I WAS NOT RELEASED UNTIL LATE MARCH. WAS NOT ABLE TO SEE MY DAUGHTER WHO LIVED IN TEXAS. I WENT TO HER FUNERAL AS I WAS RELEASED. SHE DIED A MONTH LATER, NOT BEING WITH HER AND HER FAMILY DURING THAT TIME WAS AS BAD AS THE INJURIES. ALL LAWYERS STATED THAT IT WOULD BE TOO EXPENSIVE TO PURSUE TOYOTA. EXAMINED THE CAR AND POO POOED THE IDEA THAT THEY WERE IN ANY WAY RESPONSIBLE. I WAS VERY WORRIED ABOUT SOMEONE HAVING A WORSE ACCIDENT. *TB
Additional Summary:

Toyota ID No:
NHTSA ODI No: 10182084
Date of Incident: 20070131

Vehicle: 2007 TOYOTA FJ CRUISER
Location of Incident: FOXBORO, MA
NHTSA Summary:
ENGINE ACCELERATES TO 1500 RPM WHEN I TAKE MY FOOT COMPLETELY OFF THE THROTTLE WHEN DRIVING AT SLOW SPEEDS (UNDER 1500 RPM). THIS CAUSES THE VEHICLE (MANUAL TRANSMISSION) TO SPEED UP INSTEAD OF SLOWING DOWN, EXACTLY THE OPPOSITE OF THE "ENGINE BRAKING" THAT ONE WOULD EXPECT. I FEEL THIS PRESENTS A MAJOR SAFETY HAZARD WHEN DRIVING IN TRAFFIC AND / OR ICY ROAD CONDITIONS. *JB
Additional Summary:

Toyota ID No: 10285889
NHTSA ODI No: 10285889
Date of Incident: 20070201
Vehicle: 2007 TOYOTA RAV4
Location of Incident: COLDWATER TOWNSHIP, MI
NHTSA Summary:
TL*THE CONTACT OWNS A 2007 TOYOTA RAV4. WHILE DRIVING OUT OF THE DRIVEWAY THE FLOOR MAT STARTED TO SLIP UNDER THE BRAKE AND ACCELERATOR PEDAL. THE CONTACT HAS REMOVED THE FLOOR MATS. THE CONTACT IS AWARE OF THE SAFETY RISK SINCE THE VEHICLE COULD ACCELERATE AND CAUSE A CRASH. THE CURRENT MILEAGE WAS 20,000 AND THE FAILURE MILEAGE WAS 3,000.
Additional Summary:

Toyota ID No: 10181680
NHTSA ODI No: 10181680
Date of Incident: 20070201
Vehicle: 2002 TOYOTA CAMRY
Location of Incident: MARIETTA, GA
NHTSA Summary:
SUDDEN ACCELERATION OF 2002 CAMRY WITH 27,000 MILES ON IT. I WAS PARKED, HAD FOOT ON BRAKE, TURNED CAR ON. PUT CAR IN DRIVE WHILE FOOT STILL ON BRAKE AND CAR SURGED FORWARD. THIS WAS SO FRIGHTENING AS A MOM AND CHILD WERE WALKING IN FRONT OF MY CAR. I SMASHED MY FOOT ON THE BRAKE, PUT CAR IN PARK AND TURNED MOTOR OFF TO MAKE IT STOP. *JB
Additional Summary:

Toyota ID No: 10181375
NHTSA ODI No: 10181375
Date of Incident: 20070201
Vehicle: 2004 LEXUS ES
Location of Incident: COLLEGE PARK, GA
NHTSA Summary:
TL* - THE CONTACT CALLED REGARDINGTHE 2004 LEXUS ES 330. THE CONTACT WAS TURNING INTO A PARKING SPACE AND THE CONTACT'S VEHICLE HESITATED AND THEN SUDDENLY ACCELERATED AND HIT THE VEHICLE PARKED DIRECTLY IN FRONT. THERE WERE NO WARNING INDICATORS. THE CONTACT'S VEHICLE SUSTAINED FRONT END DAMAGE. THE HEADLIGHTS BROKE AND THE HOOD WAS DENTED. THE AIRBAGS DID NOT DEPLOY. THE CONTACT STATED THAT THE HER VEHICLE WENT UNDERNEATH THE VEHICLE IN FRONT. THE OTHER VEHICLE SUSTAINED MINOR DAMAGE. THE VEHICLE WAS DRIVABLE, AND HAS BEEN TAKEN TO A REPAIR SHOP. THE DEALER WILL DO A DIAGNOSTIC CHECK ON THE VEHICLE. A POLICE REPORT WAS FILED. *AK

Additional Summary:

Toyota ID No:
NHTSA ODI No:
Date of Incident: 20070205
Vehicle: 2005 Toyota CAMRY
Location of Incident: BAKERSFIELD, CA
NHTSA Summary:
"SAN LUIS OBISPO, CA – On February 5, 2007, actor and Actor Eizel were headed to lunch at the Fellini Pizza Restaurant on Pismo Beach,
California. The restaurant is perched on the edge of a cliff, affording dramatic views of the Pacific Ocean below. The parking lot was downhill of
the restaurant, so Eizel rode the brakes of his 2005 Camry as he approached a parking space. He was at a complete stop, when the Camry suddenly accelerated, jumping a small curb, crashing through a fence and over the bluff. The vehicle fell 70 feet to the rocks below, and turned over once, coming to rest in the surf. Anna Eizel died of her injuries in the crash, Robert Eizel later recovered."
Additional Summary:

Toyota ID No: 10193576
Date of Incident: 20070205
Vehicle: 2001 TOYOTA TACOMA
Location of Incident: SAN JOSE, CA
NHTSA Summary:
TL * THE CONTACT PURCHASED ON 07/25/03 A 2002 TOYOTA TACOMA FOUR DOOR DBL CAB. THE FIRST FAILURE OCCURRED ON 4/25/04 WHILE SLOWLY PULLING INTO A PARKING PLACE WITH AND LIGHTLY ACCELERATING, THE ENGINE REVVED SO FAST THE TRUCK DROVE OVER THE PARKING STRIP AND CRASHED INTO A PILLAR ON THE SIDEWALK. CAUSING $3000.00 WORTH OF DAMAGE TO TRUCK, AND $4000.00 DAMAGE TO THE PILLAR. DURING THE SECOND OCCURRENCE ON 10/09/06 VEHICLE STOPPED AT A RED LIGHT AND THE ENGINE ACCELERATED SO THE CONTACT PUT IT IN TO NEUTRAL AND ENGINE REVVED FASTER. THE DRIVER THEN SHIFTED THE VEHICLE BACK INTO DRIVE AND ENGINE RETURNED TO NORMAL IN A COUPLE SECONDS. DURING THIRD OCCURRENCE ON 02/04/07. WHILE STOPPING AT A RED LIGHT THE ENGINE REVVED AND WENT BACK TO NORMAL BEFORE THE CONTACTS COULD TURN OFF THE KEY. IF THERE HAD BEEN A CAR IN FRONT OF THE CONTACTS VEHICLE IT WOULD HAVE CAUSED A CRASH. THE FIRST TWO TIMES THE CONTACT TOOK THE TRUCK TO THE DEALER. EACH TIME THEY COULD NOT FIND ANYTHING, AND GENTLY SUGGESTED THAT MAYBE THE ACCELERATOR, AND BRAKES WERE BOTH ENGAGED AT THE SAME TIME. FIRST TIME THE CONTACTS FOOT WAS ON THE ACCELERATOR, AND THE OTHER TIMES IT WAS ONLY ON THE BRAKES, THAT WAS THE FIRST THING THE CONTACT CHECKED. THE SERVICE MANAGER ADVISED HER NOT TO DRIVE THIS VEHICLE. NO MS RENTED A VEHICLE FOR A COUPLE DAYS. THEY HAD SOMEONE FROM TOYOTA COME TO CHECK IT OUT, BUT THEY COULD NOT FIND ANYTHING WRONG. *AK
Additional Summary:

Toyota ID No: 10217667
NHTSA ODI No: 10217667
Date of Incident: 20070206
Vehicle: 2006 SCION XA
Location of Incident: ARLINGTON, VA
NHTSA Summary:

TL *THE CONTACT OWNS A 2006 TOYOTA SCION XA. WHILE DRIVING 5 MPH, THE VEHICLE ACCELERATED TO 15 MPH. THE BRAKE PEDAL WAS DEPRESSED; HOWEVER, THE VEHICLE WOULD NOT STOP AND CRASHED INTO A TREE. THE VEHICLE WAS RESTARTED AND THE THROTTLE WAS FULLY ENGAGED. THE VEHICLE WAS TOWED TO THE DEALER AND THEY STATED THAT THE FAILURE WAS DUE TO THE AFTERMARKET ROSTRA CRUISE CONTROL SWITCH. THE FAILURE PREVIOUSLY OCCURRED WITHOUT A CRASH AND THE DEALER PREVIOUSLY RECOMMENDED THAT THE CRUISE CONTROL BE DISCONNECTED. THE CRUISE CONTROL WAS NOT DISCONNECTED BECAUSE THE DEALER STATED THAT THE FAILURE HAD BEEN REPAIRED. THE FAILURE MILEAGE WAS 11,200 AND CURRENT MILEAGE WAS 11,200. UPDATED 02/08 *CN UPDATED 02/08/08 *TR
Additional Summary:

Toyota ID No: 10293590
Date of Incident: 20070215
Vehicle: 2005 TOYOTA 4RUNNER
Location of Incident: ARNOLD, MD
NHTSA Summary:
TL* THE CONTACT OWNED A 2005 TOYOTA 4RUNNER. WHEN ATTEMPTING TO SHIFT LANES AT 35 MPH, THE ACCELERATOR PEDAL BECAME STUCK. AFTER REPEATED BRAKE APPLICATION HE WAS ABLE TO STOP THE VEHICLE. THE VEHICLE WAS TOWED TO THE DEALERSHIP. BUT THE TECHNICIAN COULD NOT IDENTIFY THE CAUSE OF THE FAILURE. HE WAS ABLE TO TRADE THE VEHICLE FOR ANOTHER VEHICLE AT THE DEALERSHIP. THE CURRENT AND FAILURE MILEAGES WERE APPROXIMATELY 20,000.
Additional Summary:

Toyota ID No: 10183019
Date of Incident: 20070218
Vehicle: 2003 TOYOTA CAMRY
Location of Incident: FAIRLAWN, NJ
NHTSA Summary:
TL * THE CONTACT OWNS A 2003 TOYOTA CAMRY. THE CONTACT PUT THE VEHICLE IN REVERSE AND IT ACCELERATED ON ITS OWN WITHOUT WARNING. THE CONTACT STATED THAT HIS FOOT REMAINED ON THE BRAKE PEDAL AND THE VEHICLE CONTINUED TO ACCELERATE. IT LUNGED FORWARD OVER A CURVE AND HIT A TREE. THE REAR AXLES WERE DAMAGED. THE VEHICLE WAS TOWED. THE FAILURE AND CURRENT MILEAGE WAS 69,000. THERE WERE NO INJURIES. A POLICE REPORT WAS TAKEN, AND THE CONTACT HAD PHOTOS OF THE VEHICLE. THE VEHICLE HAS NOT BEEN DIAGNOSED AT THIS TIMEASK.
Additional Summary:

Toyota ID No: 10183208
Date of Incident: 20070220
Vehicle: 2006 TOYOTA TUNDRA
Location of Incident: PRESCOTT, AZ
NHTSA Summary:
I WAS DRIVING NORTH OUT OF PHOENIX ARIZONA ON I-17 JUST PAST BLACK CANYON CITY, WITH MY CRUISE CONTROL SET AT 75 MPH. THERE IS A VERY LONG HILL GOING NORTH TO SUNSET POINT. PRIOR TO APPROACHING THE HILL I CANCELED THE CRUISE SO THAT THE TRANSMISSION WOULDN'T HUNT GEARS. I DROVE UP THE HILL AT 65 TO 75

MPH (NO CRUISE). WHEN I MADE THE TOP OF THE HILL AT SUNSET POINT AND LEVELED OUT, I ACCELERATED THE VEHICLE TO 75 MPH AND HIT RESUME. THE ENGINE RACED TO 5200 RPM. I HEIGHTEN AT 5700 RPM. THE TRANSMISSION DID NOT FOLLOW SUITE. IT WAS AS IF I WAS IN NEUTRAL REVVING THE ENGINE. I IMMEDIATELY CANCELED THE CRUISE AND DROVE A MILE OR SO WITHOUT CRUISE, THEN DECIDED TO TRY IT AGAIN. EVERYTHING WORKED NORMAL. I HAVE BEEN IN CONTACT WITH MY DEALER SERVICE DEPT. AND THEY ARE BAFFLED. THEY HAVE NOT LOOKED AT IT AS YET DUE TO THEIR SCHEDULE. AS SOON AS THEY CAN GET ME IN THEY WILL. THEY DID SAY THAT THERE SHOULD HAVE BEEN A CHECK ENGINE LIGHT, BUT THERE WAS NOT. THEY ARE HOPING THAT THE ONBOARD COMPUTER RECORDED IT. NOT ONLY IS THIS A MAJOR SAFETY HAZARD, BUT IT COULD HAVE CAUSED MY ENGINE TO BLOW UP. I'M NOT SURE WHAT REACTION MY WIFE WOULD HAVE HAD, SHE DRIVES ALL THE VEHICLES WE HAVE AND THEY BOTH HAVE CRUISE. YET SHE IS NOT THAT FAMILIAR WITH RPMS AND REDLINES AND THE ISSUE THAT FOLLOW. WHEN I MANE ALLOWED THE CRUISE TO PULL ME UP AN INCLINE IT USUALLY DROPS 1 OR TWO GEARS AND THE RPMS ARE AROUND 3000 TO 3200. THIS I CONSIDER NORMAL. I HAD A 1999 TOYOTA TACOMA WITH A SIX CYLINDER ENGINE AND CRUISE, SO I AM VERY FAMILIAR WITH THE SYSTEM. I PURCHASED THE VEHICLE FROM TENN TOYOTA IN PRESCOTT. I ALSO BROUGHT TO THEIR ATTENTION A NOISE THAT I HEARD IN THE RIGHT FRONT SUSPENSION AND THEY ARE GOING TO TAKE CARE OF IT UNDER A NEW RECALL THAT HAS NOT EVEN BEEN SENT TO CUSTOMERS, NOR WAS THE SERVICE DEPT AWARE OF IT. *JB
Additional Summary:

Toyota ID No: 10182278
Date of Incident: 20070221
Vehicle: 2006 TOYOTA SIENNA
Location of Incident: MOUNTAIN VIEW, CA
NHTSA Summary:
SIENNA UNCONTROLLED ACCELERATION!!! IT HAPPENED TO OUR 2006 SIENNA YESTERDAY 2/21/2007 - MY WIFE WAS ABOUT TO STOP THE CAR WHILE PARKING IT AT A PARKING SPACE. SUDDENLY IT ACCELERATED (VERY FAST) AND KNOCKED DOWN A TREE AND SCRATCHED A COUPLE OF PARKED CARS. IT TOOK A TREE, SOME BUSHES AND A DOUBLE RAISED CURBS TO STOP THE VAN. THE BUMPER WAS DAMAGED BY THE TREE AND THE RIGHT SIDE OF VAN DENTED. MY WIFE IS A CAREFUL DRIVER (AND WITH OUR TWO TODDLERS INSIDE!) AND SHE IS VERY SURE SHE DID NOTHING WRONG. WE ARE VERY CONCERNED TO DRIVE IT AGAIN IF THE REPAIR SHOP CANNOT FIND DEFECT WITH THE VAN. I HAVE A SIMILAR ACCIDENT REPORT HERE: HTTP://TOWNHALL-TALK.EDMUNDS.COM/WEB/2744@@/1030886@ *JB
Additional Summary:

Toyota ID No: 10185361
Date of Incident: 20070222
Vehicle: 2006 TOYOTA CAMRY SOLARA
Location of Incident: CHANDLER, AZ
NHTSA Summary:
I OWN A 2006 TOYOTA SOLARA 6 CYL. AND THE CAR HAS A PROBLEM WHEN WHEN YOU ACCELERATE FROM A SLOW PACE (AS WHEN YOU START TO MERGE INTO A BUSY STREET OR FREEWAY) THE CAR ACTUALLY HESITATES, THERE IS A 1 1/2 TO 2 SECOND DELAY OR LAG BEFORE THE CAR ACTUALLY KICKS IN AND ACCELERATES. I ACTUALLY HEAR AND SEE THE RPMS REV UP ON ONE OF THE GAUGES, BUT THE CAR IS NOT ACCELERATING OR SHIFTING AS IT SHOULD BE. IT IS TOYOTA'S RESPONSIBILITY TO DO A

REPLACEMENT FOR A COMPUTER UPDATE. THIS IS ALL THAT IS NEEDED TO CORRECT THE PROBLEM AND I DEMAND THAT IT BE DONE BEFORE AN ACCIDENT HAPPENS. THIS PROBLEM IS VERY DANGEROUS AND HAS THE POTENTIAL TO CREATE A DEADLY ACCIDENT. I HAVE TAKEN MY 2006 TO TWO TOYOTA DEALERSHIPS IN THE PHOENIX AREA AND HAVE NOT GOTTEN THE HELP NEEDED TO TAKE CARE OF THIS SERIOUS MATTER. I AM NOT PLEADING WITH NHTSA TO HELP ME WITH THIS MATTER AND I WANT TO BRING THIS TO THE ATTENTION OF THE PUBLIC, TOYOTA, THE DEALERSHIPS, THE GOVERNMENT AND EVERYONE WHO CAN HELP WITH GETTING THIS MATTER TAKEN CARE OF. IF I AM IN AN ACCIDENT BECAUSE OF THIS PROBLEM I WILL HOLD EVERYONE INVOLVED RESPONSIBLE AS I FEEL I AM HAVE TOLD ALL THOSE WHO CAN HELP EVERYTHING I CAN AND I GET NO RESPONSE. I WANT THIS PROBLEM TO BE TAKEN VERY SERIOUS AND I EXPECT TO BE HEARD AND SOMEONE TO CONTACT ME WITHIN A RESPONSIBLE AMOUNT OF TIME. I KNOW IN FACT TOYOTA IS AWARE OF THIS PROBLEM AND HAS ORDERED THE MECHANICS, SERVICE WRITERS AT THE DEALERSHIPS TO WITHHOLD THIS INFORMATION FROM CUSTOMERS. I ALSO KNOW THAT TOYOTA HAS CORRECTED THE PROBLEM WITH THE 2007 TOYOTA CAMRY. I ALSO OWN A 2000 TOYOTA SOLARA 6 CYLINDER AND THIS CAR HAS NO SUCH PROBLEM WITH IT HESITATING. I ALSO DRIVE A 2007 TOYOTA CAMRY, LOANER CAR, THAT DID NOT HAVE THIS PROBLEM.
Additional Summary:

Toyota ID No:
NHTSA ODI No: 10183785
Date of Incident: 20070217
Vehicle: 2003 TOYOTA CAMRY
Location of Incident: STONY POINT, NY
NHTSA Summary:
2003 TOYOTA CAMRY ACCELERATED OUT OF CONTROL AND REAR ENDED SECOND VEHICLE AND THEN A BUILDING BEFORE STOPPING. OPERATOR ATTEMPTED TO STOP THE VEHICLE BY FULLY DEPRESSING BRAKES, PUMPING BRAKES AND SHIFTING TO NEUTRAL TO NO AVAIL. VEHICLE WAS BROUGHT TO DEALER FOR PROBLEM IN 06/06 AND AGAIN IN 02/07. IN 06/06 DEALER STATED THERE WAS A COMPUTER PROBLEM AND AN ADJUSTMENT WAS MADE. IN 02/07 DEALER STATED THEY COULD NOT FIND ANY PROBLEM. OPERATOR STATE HE HAD FOUR FAILURES BEFORE SERVICING IN 2006 AND ONLY ONE FAILURE BEFORE BRINGING IT IN IN 2007. THERE WAS DIRECT FRONTAL IMPACT THAT CAUSED EXTENSIVE DAMAGE. NEITHER AIR BAG DEPLOYED. *NM
Additional Summary:

Toyota ID No:
NHTSA ODI No: 10184331
Date of Incident: 20070101
Vehicle: 2003 TOYOTA AVALON
Location of Incident: SILVER SPRING, MD
NHTSA Summary:
TL* THE CONTACT OWNS A 2003 TOYOTA AVALON. WHILE PARKING THE VEHICLE THE ACCELERATOR PEDAL ENGAGED WITHOUT WARNING. THE CONTACT WAS DRIVING 4 MPH. THE CONTACT DEPRESSED THE BRAKES AND THE VEHICLE WOULD NOT STOP, AND ITM CRASHED INTO A PARKED FORD PICK UP TRUCK. THE ROAD CONDITIONS WERE NOT A FACTOR. THE VEHICLE WAS TOWED, AND THE CONTACT WAS UNABLE TO DRIVE THE VEHICLE. THE CONTACT SUSTAINED A SHOULDER INJURY DUE TO THE SEAT BELT. THE PASSENGER IN THE FRONT SEAT STATED DUE TO THE AIRBAG DEPLOYMENT HE WAS HAVING HEARING PROBLEMS AND EXPERIENCED DISCOMFORT TO HIS TEETH. THE PASSENGER IN THE BACK SEAT EXPERIENCED CHEST PAINS. THE VEHICLE HAS NOT BEEN

INSPECTED TO DETERMINE THE REASON FOR THE UNEXPECTED ACCELERATION. THE CURRENT AND FAILURE MILEAGE WAS 15,000. *AK
Additional Summary:

Toyota ID No:
NHTSA ODI No: 10184376
Date of Incident: 20070101
Vehicle: 2004 TOYOTA CAMRY
Location of Incident: LINCOLN, NE
NHTSA Summary:
TL* THE CONTACT OWNS A 2004 TOYOTA CAMRY. WHILE COMING OUT OF THE CAR WASH AND SWITCHING THE POSITION GEAR FROM NEUTRAL TO DRIVE THE VEHICLE ACCELERATED TO ALMOST 50 MPH FOR ABOUT 20-30 SECONDS, CAUSING IT TO CRASH INTO A POLE. THE CONTACT TRIED TO APPLY THE BRAKE, BUT COULD NOT STOP THE VEHICLE. CONTACT CAN PROVIDE PICTURES IF NEEDED. THE CURRENT AND FAILURE MILEAGE WERE BOTH 17,000.*AK
Additional Summary:

Toyota ID No:
NHTSA ODI No: 10186380
Date of Incident: 20070219
Vehicle: 2007 TOYOTA FJ CRUISER
Location of Incident: LENEXA, KS
NHTSA Summary:
MY VEHICLE EXPERIENCES RPM GAIN WHEN TRYING TO STOP, AND A THE RPMS NEVER RESIDED BETWEEN BRIPTS OF GEARS OR UNTIL THE VEHICLE WAS BELOW 3 MPH. ON SEVERAL OCCASIONS DURING EMERGENCY SAFETY STOPS THE VEHICLE HAS ACTUALLY ACCELERATED DURING THE BRAKING PROCESS. TOYOTA EXPLAINED THAT THESE RPM CONDITIONS WERE DUE TO NEW TECHNOLOGY IN AUTOMOBILES.*AK
Additional Summary:

Toyota ID No:
NHTSA ODI No: 10186290
Date of Incident: 20070327
Vehicle: 2003 TOYOTA CAMRY
Location of Incident: FOLLY BEACH, SC
NHTSA Summary:
CRUISE CONTROL DID NOT DISENGAGE UPON PRESSING BRAKE PEDAL. HYDRAULIC BRAKES WOULD NOT STOP VEHICLE. METHOD USED TO STOP VEHICLE INCLUDED PUTTING VEHICLE IN NEUTRAL AND APPLYING EMERGENCY PARKING BRAKE. NARROWLY AVOIDED COLLISION WITH OTHER VEHICLES WHICH HAD STOPPED BY SQUEEZING BETWEEN THEM AND THE CONCRETE MEDIUM. MY VEHICLE WAS SCRAPED ON DRIVERS SIDE BUT NO OTHER VEHICLE WAS DAMAGED (THANK GOD). COULD NOT DUPLICATE. *JB
Additional Summary:

Toyota ID No:
NHTSA ODI No: 10215337
Date of Incident: 20070228
Vehicle: 2007 TOYOTA COROLLA
Location of Incident: WEEKI WACHEE, FL

NHTSA Summary:
TL*THE CONTACT OWNS A 2007 TOYOTA COROLLA. WHILE DRIVING 2 MPH, THE CONTACT DEPRESSED THE BRAKE PEDAL, BUT DEPRESSED THE ACCELERATOR PEDAL AS WELL. THE VEHICLE STRUCK A POLE. THE BUMPER WAS SCRATCHED. HE STATED THAT THE BRAKE AND ACCELERATOR PEDALS WERE TOO CLOSE TO ONE ANOTHER. THE FAILURE MILEAGE WAS 5 AND CURRENT MILEAGE WAS 5,000. UPDATED 02-14-08 BF * UPDATED 02/14/08 *TR
Additional Summary:

Toyota ID No:
NHTSA ODI No: 10184801
Date of Incident: 20070271
Vehicle: 2004 LEXUS ES
Location of Incident: HERCULES, CA
NHTSA Summary:
ACCELERATION DELAY OF UP TO 2 FULL SECONDS. *JB
Additional Summary:

Toyota ID No:
NHTSA ODI No: 10187367
Date of Incident: 20070602
Vehicle: 2004 TOYOTA COROLLA
Location of Incident: BROOKLYN, NY
NHTSA Summary:
TL*- THE CONTACT STATED THAT WHILE DRIVING THE 2004 TOYOTA COROLLA WITH 31000 FAILURE MILEAGE AT 15 MPH WITH FOOT ON THE GAS PEDAL THE VEHICLE RACED UP TO 35 MPH, AND THE RPMS RACED BETWEEN 4 AND 5 ON THE GAUGE. THE CONTACT IMMEDIATELY APPLIED THE BRAKE AS HARD AS HE COULD, AND PUT THE VEHICLE INTO NEUTRAL. HE ALSO APPLIED THE GAS, ALLOWING THE VEHICLE TO STOP ISLING. THE VEHICLE WAS AT THE DEALER BEING LOOKED AT CONCERNING THIS PROBLEM. THE CURRENT MILEAGE WAS 32,000.*AK. UPDATED 06/30/07. *JB
Additional Summary:

Toyota ID No:
NHTSA ODI No: 10187416
Date of Incident: 20070602
Vehicle: 2007 TOYOTA RAV4
Location of Incident: RED OAK, IA
NHTSA Summary:
TL*- THE CONTACT STATED THAT WHEN THE 2007 TOYOTA RAV 4 WAS TEST DRIVEN ON JANUARY 1, 2007 THE ACCELERATION AND CONTROL ON THE VEHICLE WAS NOT STABLE. AT TIMES THE VEHICLE ACCELERATED ABRUPTLY EVEN IF THE ACCELERATOR WAS SLIGHTLY DEPRESSED. THREE WEEKS AFTER THE VEHICLE WAS PURCHASED HE NOTICED THAT WHEN DEPRESSING THE ACCELERATOR PEDAL THE VEHICLE WOULD ACCELERATE, BUT IT WOULD NOT REACH THE DESIRED SPEED. THEN AFTER A FEW SECONDS THE VEHICLE WOULD ACCELERATE AGAIN. THE CONTACT STATED THAT WHEN TURNING CORNERS WITH THE ACCELERATOR WAS DEPRESSED THE VEHICLE WOULD SPEED UP. IT REMAINED STEADY FOR A FEW SECONDS AT A CONSTANT SPEED THEN IT PROCEEDED TO ACCELERATE ABRUPTLY. THE CONTACT STATED THAT WHEN DRIVING ON THE HIGHWAY IF ANOTHER VEHICLE SLOWED DOWN IN FRONT OF THE CONTACTS VEHICLE, TRYING TO SPEED UP AGAIN WAS ALSO A PROBLEM. THE VEHICLE ACCELERATED AND STAYED STEADY AT ANY GIVEN SPEED, BUT THEN AFTER A FEW

SECONDS IT WOULD ACCELERATE TO A HIGHER SPEED WITHOUT WARNING. THE CONTACT TOOK THE VEHICLE TO THE DEALERSHIP, AND WAS TOLD THESE VEHICLES DID NOT HAVE A CABLE GOING FROM THE GAS PEDAL TO THE MECHANISM THAT GIVE GAS TO THE VEHICLE. THIS SYSTEM WAS ELECTRIC IN THE 2007 MODELS. THE FAILURE MILEAGE WAS 3,200, AND THE CURRENT MILEAGE WAS 3,500. *AK UPDATE 1/29/7*TR
Additional Summary:

Toyota ID No:
NHTSA ODI No: 10187539
Date of Incident: 20070809
Vehicle: 2003 LEXUS ES
Location of Incident: WEST DESMOINES, IA
NHTSA Summary:
TL*THE CONTACT OWNS A 2003 LEXUS ES300. THE CONTACT STATED THAT THE VEHICLE AUTOMATICALLY ACCELERATED WHILE ATTEMPTING TO PULL INTO A PARKING SPACE. THE CONTACT DEPRESSED THE BRAKE PEDAL, BUT THE VEHICLE CONTINUED TO ACCELERATE. THE VEHICLE STOPPED ONLY AFTER IT JUMPED A CURB. THE VEHICLE WAS TOWED TO A DEALER, BUT NO FAILURE WAS FOUND. THE CONTACT HAS THE REPAIR INVOICE AND PICTURES. THE CURRENT AND FAILURE MILEAGE WERE 30,313.*AK
Additional Summary:

Toyota ID No:
NHTSA ODI No: 10207394
Date of Incident: 20070617
Vehicle: 2007 LEXUS RX350
Location of Incident: FREDERICKSBURG, TX
NHTSA Summary:
TL* THE CONTACT OWNS A 2007 LEXUS RX350. WHILE DRIVING BETWEEN 25-30 MPH SHE EXPERIENCED UNINTENDED VEHICLE ACCELERATION. OVERNIGHT ENTIRY 2006 BEAR-ENDED THE PRECEEDING VEHICLE. BOTH DRIVERS OF EACH VEHICLE RECEIVED BRUISES FROM THE IMPACT. A POLICE REPORT WAS AVAILABLE. THE VEHICLE RECEIVED $10,000 WORTH OF DAMAGES. A REPRESENTATIVE FROM THE MANUFACTURER WAS SENT TO INSPECT HER VEHICLE. THE INSPECTOR COULD NOT LOCATE A DEFECT IN HER VEHICLE. THE FAILURE MILEAGE WAS 12,179.
Additional Summary:

Toyota ID No:
NHTSA ODI No: 10192753
Date of Incident: 20070418
Vehicle: 2001 LEXUS LS430
Location of Incident: ST LOUIS, MO
NHTSA Summary:
TL*THE CONTACT OWNS A 2001 LEXUS LS430. WHILE DRIVING 3 MPH, THE VEHICLE ACCELERATED WITHOUT WARNING. THE CONTACT BELIEVED THAT THE CAUSE OF FAILURE WAS DUE TO THE FLOOR MATS BEING CAUGHT UNDERNEATH THE ACCELERATOR PEDAL. THERE IS DEFECT INVESTIGATION # 9507944 FOR THE 2007 LEXUS RX350. THE CONTACT WANTED TO HAVE HER VEHICLE INCLUDED IN THE INVESTIGATION. THE VIN AND ENGINE SIZE WERE UNAVAILABLE. THE CURRENT MILEAGE IS 42,000 AND FAILURE MILEAGE WAS 41,600.
Additional Summary:

Toyota ID No:
NHTSA ODI No: 10192140
Date of Incident: 20070501
Vehicle: 2005 TOYOTA CAMRY
Location of Incident: MILL VALLEY, CA
NHTSA Summary:
2005 CAMRY CUSTOMER STATES THAT HE FELT SURGES FROM DRIVING THE CAR**NARF**CU: THE CONSUMER STATED WHENEVER SHE SLOWS DOWN AND ACCELERATE, OR CHANGE LANES THE VEHICLE THROWS HER BACK AND FORTH AT TIMES. *JB
Additional Summary:

Toyota ID No:
NHTSA ODI No: 10196400
Date of Incident: 20070501
Vehicle: 2006 TOYOTA CAMRY
Location of Incident: ESCONDIDO, CA
NHTSA Summary:
I HAD POLLEES SLOWLY INTO A PARKING SPACE. I HAD MY FOOT ON THE BRAKE. I WAS STOPPED. I WAS PUTTING THE CAR INTO THE PARK POSITION WHEN THE CAR SUDDENLY SURGE FORWARD AT A HIGH RATE OF SPEED. MY SEAT WAS ON THE BRAKE THE ENTIRE TIME. THE CAR WENT OVER THE CEMENT BLOCK INTO THE PARKING SPACE, JUMPED OVER A CEMENT CURB ONTO A GRASSY CENTER ISLAND AND FINALLY STOPPED WHEN I HIT A TREE. I HAVE PICTURES OF SKID MARKS ON THE GRASSY AREA AND THE PAVEMENT TO SHOW THAT I HAD MY FOOT ON THE BRAKE AND I WAS TRYING TO STOP THE CAR. THE CAR WAS TOTALED, AND I SUSTAINED BRUISES FROM THE AIRBAG AND THE SEAT BELT. I CONTACTED TOYOTA. THEY SENT AN ENGINEER TO INSPECT THE CAR. THE ENGINEER SAID THAT HE COULD NOT RECREATE THE PROBLEM AND NOTHING WAS WRONG WITH THE CAR. I KNEW THAT MY FOOT WAS ON THE BRAKE, NOT THE GAS PEDAL. EVEN IF IT WAS ON THE GAS PEDAL, I WAS PARKING AND CERTAINLY WOULD NOT HAVE STOMPED ON THE GAS PEDAL TO MAKE THE CAR SURGE OUT OF CONTROL AS IT DID. *VK
Additional Summary:

Toyota ID No:
NHTSA ODI No: 10189625
Date of Incident: 20070502
Vehicle: 2004 TOYOTA COROLLA
Location of Incident: PARMA, OH
NHTSA Summary:
I HAD A RAPID ACCELERATION PROBLEM WITH MY 2005 TOYOTA COROLLA YESTERDAY. THE ENGINE RPM WENT TO ABOUT 7000RPM. BEFORE ANY DAMAGE OCCURRED I SHUT THE VEHICLE OFF. WHEN STARTING UP AGAIN THERE SEEMED TO BE NO PROBLEM. I IMMEDIATELY CALLED THE DEALER AND AFTER CHECKING OUT THE VEHICLE THEY COULD NOT FIND A PROBLEM. *TR
Additional Summary:

Toyota ID No:
NHTSA ODI No: 10192988
Date of Incident: 20070505
Vehicle: 2001 LEXUS ES300
Location of Incident: WARRENTON, VA

NHTSA Summary:
ON 2 RECENT OCCASIONS (NOV 12, 2006 AND MAY 5, 2007) MY WIFE WAS PULLING INTO A PARKING SPACE AND SHIFTING THE CAR INTO PARK WHEN THE CAR ACCELERATED RAPIDLY AND SLAMMED INTO A WALL. BOTH INCIDENTS WERE ALMOST IDENTICAL, EXTENSIVE DAMAGE WAS DONE TO THE FRONT SHEET METAL (ABOUT $9,000 ON EACH INCIDENT). IT'S POSSIBLE THAT MY WIFE STEPPED ON THE ACCELERATOR WHEN SHE THOUGHT SHE WAS STEPPING ON THE BRAKE BUT SHE SWEARS THAT THIS DID NOT HAPPEN. ALSO, IT IS UNLIKELY THAT THIS HAVE HAPPENED TWICE. *TR
Additional Summary:

Toyota ID No:
NHTSA ODI No: 10191379
Date of Incident: 20070508
Vehicle: 2000 TOYOTA CAMRY
Location of Incident: QUINCY, MA
NHTSA Summary:
VEHICLE HAS A HIGH IDLE UNTIL IT WARMS UP. IN THE MORNING IT COULD GO TO 1 1/2 TO 2 RPMS. I CAN PULL OUT OF MY PARKING SPOT WITHOUT EVER TOUCHING THE GAS PEDAL. ONCE AT A SECOND LIGHTS IT STILL IS REVVING. IT DOES NOT GO DOWN TO 0 RPMS EVEN AT THE LIGHTS, WHEN I'M AT A COMPLETE STOP. HAD IT CHECKED SEVERAL TIMES AT TOYOTA ON NORRISBEY BLVD THEY PERFORMED A DIAGNOSTIC AND FOUND THE IDLE AIR CONTROL VALVE MALFUNCTIONING. THEY KEPT ACED IDLE AIR CONTROL VALVE AND TESTED SYSTEM WITHIN NORMAL LIMITS. THAT WAS ON 9-26-07. THE FIRST TIME WAS ON 5-07-07 TECH FOUND FRONT EXHAUST PIPE HAD AN INTERNAL FAILURE CAUSING VEHICLE TO RUN ABNORMALLY AND LACK POWER, CAUSE INTERNAL FAILURE OPEN CIRCUIT. REPLACED FRONT PIPE SUB ASSEMBLY. AFTER THIS I LEFT IT OVER NIGHT BECAUSE IT STILL WAS REVVING THEY TOLD ME IT WAS A STICK VALVE AND THEY FIXED IT BUT COULD HAPPEN FROM TIME TO TIME. STILL HAPPENS. I HAD CONTACTED SUSAN WORSICK AND SHE TOLD ME TO CONTACT YOU. THANK YOU SANDRA CARREIRA P.S. I HAVE ALL MY RECEIPTS. *TR
Additional Summary:

Toyota ID No:
NHTSA ODI No: 10192885
Date of Incident: 20070510
Vehicle: 2007 TOYOTA 4RUNNER
Location of Incident: COCKEYSVILLE, MD
NHTSA Summary:
VEHICLE SURGES FORWARD WHEN AIR CONDITIONER ON. HAZARD AT TRAFFIC LIGHTS. WILL DRIVE ITSELF FORWARD UP HILLS AND ALONG FLAT ROADS WITHOUT ACCELERATOR BEING TOUCHED WHEN AC IS ON. THE HIGHER THE AC FAN SPEED THE FASTER THE VEHICLE GOES. DEALER DOES NOT HAVE "COMPUTER PROGRAM" TO FIX. THIS IS A SAFETY HAZARD. *TR
Additional Summary:

Toyota ID No:
NHTSA ODI No: 10190867
Date of Incident: 20070520
Vehicle: 2004 TOYOTA CAMRY
Location of Incident: LAKE VILLA, IL
NHTSA Summary:

TWO (2) SEPARATE INCIDENTS: BOTH TIMES, ACCELERATOR STUCK AND CAR HAD TO BE PUT INTO NEUTRAL AND BRAKE PEDAL AND PARKING BRAKE USED TO STOP VEHICLE. DEFINITELY NOTHING STUCK ON UNDER ACCELERATOR EITHER TIME. HAD TO TURN OFF THE ENGINE ASAP TO STOP THE ENGINE FROM RACING TO VERY HIGH RPMS. 1. HAPPENED FIRST WHEN PARALLEL PARKING THE CAR. SPEED = 5MPH. APPROX MAY, 2007. CLEAR WEATHER. APPROX 60 DEGREES. HAPPENED AGAIN WHEN CAR WAS RESTARTED IMMEDIATELY. CAR WAS PARKED FOR SEVERAL HOURS. STARTED AND OPERATED OK WHEN RESTARTED AFTER THIS BREAK. 2. HAPPENED AGAIN WHEN APPROACHING A STOP SIGN FROM ABOUT 45 MPH. APPROX SEPT, 2006. PARTLY CLOUDY WEATHER. NO RAIN. APPROX 60 DEGREES. CAR WAS THEN PARKED FOR SEVERAL HOURS. OPERATED OK WHEN RESTARTED AFTER THIS BREAK. NOT SURE OF EXACT DATES BUT I COULD BE RECONSTRUCTED FROM DEALER RECORDS, IF NECESSARY. TOOK TO TWO SEPARATE TOYOTA DEALERS AND WAS TOLD BY EACH: "...NOTHING WRONG WITH CAR". "CAN'T DUPLICATE THE PROBLEM." "KEEP AN EYE ON IT..." *TR
Additional Summary:

Toyota ID No:
NHTSA ODI No: 10191292
Date of Incident: 20070520
Vehicle: 2006 TOYOTA RAV4
Location of Incident: BILLERICA, MA
NHTSA Summary:
I OWN A 2006 TOYOTA RAV4 4CYL, 4WD. I CURRENTLY HAVE JUST UNDER 15K MILES AND I'VE HAD AN ISSUE WITH THE CAR HESITATING (OR THE THROTTLE LAGGING). AT TIMES, USUALLY ONE A WEEK OR SO, IF I PUSH ON THE GAS PEDAL WHEN I NEED TO SPEED UP, IT'S AS IF NOTHING HAPPENS. I HAVE TO LET THE PEDAL GO AND PUSH IT AGAIN TO SPEED UP. IT USUALLY HAPPENS IF I'M TRYING TO MERGE INTO FASTER TRAFFIC, OR AT TIMES WHEN I'M TAKING A SLOW TURN AND THEN GO TO SPEED UP AFTERWARDS. *TR
Additional Summary:

Toyota ID No:
NHTSA ODI No: 10192768
Date of Incident: 20070523
Vehicle: 2004 LEXUS GX 470
Location of Incident: CAMARILLO, CA
NHTSA Summary:
SUDDEN ACCELERATION PROBLEM OCCURRED WHEN A 2004 GX-470 DECELERATED FROM 30 MPH TO APPROXIMATELY 2 MPH TO TURN LEFT INTO A DRIVEWAY WHEN THE VEHICLE ACCELERATED FULL THROTTLE AND COLLIDED WITH A PARKED CAR IN THE DRIVEWAY. THERE WERE TWO PASSENGERS IN THE VEHICLE, ONE IN THE FRONT NEXT TO THE DRIVER THE SECOND AN INFANT IN A CAR SEAT IN THE BACK CENTER POSITION OF THE VEHICLE. THE SUDDEN ACCELERATION WAS CONSISTENT AS THE DRIVER INITIATED THE TURN INTO THE DRIVEWAY. THE FRONT CAR TIRES WHERE FULLY TURNED TO THE LEFT AND THE PASSENGER IN THE FRONT SEAT OPENED THE FRONT LEFT CAR DOOR TO EXIT THE VEHICLE BEFORE IT WAS FULLY STOPPED. THE SUDDEN ACCELERATION PUSHED THE PASSENGER EXITING THE VEHICLE BACK INTO HIS SEAT AND HE NEVER WAS ABLE TO EXIT THE VEHICLE. IT SHOULD BE NOTED THAT THIS PROBLEM OCCURRED IN SOUTHERN CALIFORNIA AND THERE WERE NO ADDITIONAL MATS IN THE VEHICLE OTHER THAN THE ORIGINAL LEXUS CAR MATS. IN ADDITION A POSSIBLE RELATED SYMPTOM OCCURRED TWICE OVER THE FOUR YEAR HISTORY OF THE VEHICLE. THE VEHICLE WAS BEEN SENT BACK TO LEXUS IN WHICH IT WAS REPORTED THAT WHEN THE VEHICLE WAS IN PALM SPRINGS AND THE TEMPERATURE WAS OVER 110 DEGREES THAT THERE WERE ACCELERATION PROBLEMS WITH THE VEHICLE. LEXUS

RETURNED THE VEHICLE INDICATING THAT THEY COULD NOT REPEAT THE PROBLEM BUT DID NOT INVESTIGATE THE PROBLEM UNDER THE HEAT CONDITIONS. EVEN AFTER THE ACCIDENT LEXUS REFUSES TO TEST THE VEHICLE UNDER THE HEAT CONDITIONS. THE DAY OF THE ACCIDENT THE TEMPERATURE WAS ABOUT 75 DEGREES. THE PASSENGER IN THE FRONT SEAT IS AN ELECTRONIC ENGINEERING THAT RUNS A COMPANY THAT IS KNOW IN THE INDUSTRY AS RESOLVING INTERMITTENT PROBLEMS IN THE MOST COMPLEX SYSTEMS OF DEPARTMENT OF DEFENSE (DOD) (E.G. F-14, F/A-18). HIS OBSERVATION DURING THE ACCIDENT IS THAT THERE WAS EXTREMELY LOW PROBABILITY THAT THE DRIVER COULD OF MOVED THEIR FOOT FROM BRAKE THAT WAS USED TO DECELERATE THE VEHICLE TO THE POINT WHEN THE SUDDEN ACCELERATION STARTED. *TR
Additional Summary:

Toyota ID No:
NHTSA ODI No: 10197169
Date of Incident: 20070523
Vehicle: 2004 LEXUS GX470
Location of Incident: CAMARILLO, CA
NHTSA Summary:
SUDDEN ACCELERATION PROBLEM OCCURRED WHEN A 2004 GX-470 DECELERATED FROM 30 MPH TO APPROXIMATELY 2 MPH TO TURN LEFT INTO A DRIVEWAY WHEN THE VEHICLE ACCELERATED FULL THROTTLE AND COLLIDED WITH A PARKED CAR IN THE DRIVEWAY. THERE WERE TWO PASSENGERS IN THE VEHICLE, ONE IN THE FRONT NEXT TO THE DRIVER THE SECOND AN INFANT IN A CAR SEAT IN THE BACK CENTER POSITION OF THE VEHICLE. THE SUDDEN ACCELERATION WAS CONSISTENT AS THE DRIVER INITIATED THE TURN INTO THE DRIVEWAY. THE FRONT CAR TIRES WHERE FULLY TURNED TO THE LEFT AND THE PASSENGER IN THE FRONT SEAT OPENED THE FRONT LEFT CAR DOOR TO EXIT THE VEHICLE BEFORE IT WAS FULLY STOPPED. THE SUDDEN ACCELERATION PUSHED THE PASSENGER EXITING THE VEHICLE BACK INTO HIS SEAT AND HE NEVER WAS ABLE TO EXIT THE VEHICLE. IT SHOULD BE NOTED THAT THIS PROBLEM OCCURRED IN SOUTHERN CALIFORNIA AND THERE WERE NO ADDITIONAL MATS IN THE VEHICLE OTHER THAN THE ORIGINAL LEXUS CAR MATS. IN ADDITION A POSSIBLE RELATED SYMPTOM OCCURRED TWICE OVER THE FOUR YEAR HISTORY OF THE VEHICLE. THE VEHICLE HAS BEEN SENT BACK TO LEXUS IN WHICH IT WAS REPORTED THAT WHEN THE VEHICLE WAS IN PALM SPRINGS AND THE TEMPERATURE WAS OVER 110 DEGREES THAT THERE WERE ACCELERATION PROBLEMS WITH THE VEHICLE. LEXUS RETURNED THE VEHICLE INDICATING THAT THEY COULD NOT REPEAT THE PROBLEM BUT DID NOT INVESTIGATE THE PROBLEM UNDER THE HEAT CONDITIONS. EVEN AFTER THE ACCIDENT LEXUS REFUSES TO TEST THE VEHICLE UNDER THE HEAT CONDITIONS. THE DAY OF THE ACCIDENT THE TEMPERATURE WAS ABOUT 75 DEGREES. THE PASSENGER IN THE FRONT SEAT IS AN ELECTRONIC ENGINEERING THAT RUNS A COMPANY THAT IS KNOW IN THE INDUSTRY AS RESOLVING INTERMITTENT PROBLEMS IN THE MOST COMPLEX SYSTEMS OF DEPARTMENT OF DEFENSE (DOD) (E.G. F-14, F/A-18). HIS OBSERVATION DURING THE ACCIDENT IS THAT THERE WAS EXTREMELY LOW PROBABILITY THAT THE DRIVER COULD OF MOVED THEIR FOOT FROM BRAKE THAT WAS USED TO DECELERATE THE VEHICLE TO THE POINT WHEN THE SUDDEN ACCELERATION STARTED. *TR
Additional Summary:

Toyota ID No:
NHTSA ODI No: 10191355
Date of Incident: 20070524
Vehicle: 2006 TOYOTA CAMRY

Location of Incident: CAMBRIA HEIGHTS, NY
NHTSA Summary:
TL*THE CONTACT OWNS A 2006 TOYOTA CAMRY. THE DEALER STATED THAT THE VEHICLE'S FRONT BRAKES WERE OUT OF ROUND AND CAUSED THE VEHICLE TO PULSATE. THE DEALER REFURBISHED THE FRONT ROTORS AND BANDED THE FRONT BRACE PADS. WHILE DRIVING 45 MPH UNDER NORMAL DRIVING CONDITIONS, THE VEHICLE SUDDENLY ACCELERATED AND FAILED TO STOP. THE CONTACT WAS UNABLE TO STEER THE VEHICLE AND CRASHED INTO A PERMANENT WALL. THE DRIVER SUFFERED BRUISES ON BOTH LEGS, A HAND, AND CHEST. THE VEHICLE WAS DESTROYED AND TOWED. THE CURRENT AND FAILURE MILEAGES WERE 10,000.
Additional Summary:

Toyota ID No:
NHTSA ODI No: 10191799
Date of Incident: 20070324
Vehicle: 2005 LEXUS SC
Location of Incident: STITSOU CITY, CA
NHTSA Summary:
I AM AN OWNER OF A LEXUS SC-430, 2005 MODEL WITH 15428 MILES ON THE ODOMETER. THE CAR RECENTLY UNDERWENT A 15,000 MILE SERVICE. ON ARRIVING HOME AT 1:30 PM I STOPPED THE V CAR IN FRONT OF THE GARAGE AND THE DOOR WAS CLOSED. I WAS ABOUT TO REACH FOR THE GARAGE DOOR OPENER BUTTON IN THE CAR WHEN IT SUDDENLY AND SPONTANEOUSLY ACCELERATED FULL THROTTLE, WITHOUT FOOT ON THE ACCELERATOR. I APPLIED THE BRAKES BUT TO NO EFFECT. THE CAR DROVE THROUGH THE METAL GARAGE DOOR AND STOPPED WHEN IT HIT THE BACK OF THE GARAGE WALL. THE FIRE DEPARTMENT WAS SUMMONED TO OPEN THE DOOR ON MY SIDE. I WAS DRIVEN TO THE HOSPITAL BY PARAMEDICS BUT SUFFERED ONLY MINOR INJURIES. SUSTAINING CUTS FROM THE WINDSHIELD AND BRUISES FROM THE DEPLOYMENT OF THE AIRBAG. THE CAR HAD A 70-30 CHANCE OF BEING DECLARED A TOTAL WRITE OFF *AK. I HAVE REQUESTED MY INSURANCE COMPANY (MERCURY INSURANCE) TO HAVE THE CAR EXAMINED FORENSICALLY IN ORDER TO TRY TO DETERMINE THE CAUSE OF THE MALFUNCTION. AS YET I DO NOT KNOW WHETHER THEY HAVE ACTED OR INTEND TO ACT UPON MY REQUEST. I AM A CAREFUL DRIVER AND HAVE NOT HAD AN ACCIDENT OR A MOVING TRAFFIC VIOLATION SINCE 1976.
Additional Summary:

Toyota ID No:
NHTSA ODI No: 10195725
Date of Incident: 20070535
Vehicle: 2007 LEXUS ES350
Location of Incident: SCARSDALE, NY
NHTSA Summary:
SUDDEN ACCELERATION RESULTING IN A CRASH. *AK
Additional Summary:

Toyota ID No:
NHTSA ODI No: 10192554
Date of Incident: 20070519
Vehicle: 2006 TOYOTA CAMRY
Location of Incident: MIDDLETOWN, NY
NHTSA Summary:

TL*THE CONTACT OWNS A 2006 TOYOTA CAMRY. WHILE PULLING OUT OF A PARKING SPOT DRIVING 2 MPH, THE VEHICLE STARTED TO SPIN OUT OF CONTROL AND HIT A PARKED VEHICLE. THE CONTACT DID NOT REMEMBER IF SHE WAS APPLYING THE ACCELERATOR. THE ROAD CONDITIONS WERE CLEAR. THE VEHICLE WAS TOWED TO THE DEALER AND THEY WERE UNABLE TO DUPLICATE THE FAILURE. THE POWER TRAIN INFORMATION WAS UNKNOWN. THE CURRENT AND FAILURE MILEAGES WERE 28,000.
Additional Summary:

Toyota ID No:
NHTSA ODI No: 10285697
Date of Incident: 20070601
Vehicle: 2002 TOYOTA ECHO
Location of Incident: GLEN ELLYN, IL
NHTSA Summary:
TOYOTA FLOOR MAT OVER ACCELERATOR- THIS HAPPENED TO ME MORE THAN ONCE! I DISCOVERED WHAT IT WAS THE SECOND TIME IT HAPPENED. I PULLED THE EMERGENCY BRAKE AND PUT THE CAR IN NEUTRAL BOTH TIMES. TOYOTA ECHO, 2002. *TR.
Additional Summary:

Toyota ID No:
NHTSA ODI No: 10193615
Date of Incident: 20070617
Vehicle: 2006 TOYOTA RAV4
Location of Incident: DELANCO, NJ
NHTSA Summary:
THE ENGINE ON TOYOTA RAV 4 STARTED TO RACE AT MAXIMUM RPMS WHILE I WAS PARKING THE CAR. FORTUNATELY IT WAS IN NEUTRAL. I PUMPED THE ACCELERATOR BUT THAT DID NO GOOD. I TURNED THE KEY OFF AND THEN RESTARTED THE CAR. THE PROBLEM REPEATED. I DID THIS SEVERAL TIMES BEFORE ENGINE STARTED TO IDLE NORMALLY. I TOOK THE CAR TO THE DEALER BUT THEY COULD NOT FIND ANYTHING WRONG WITH IT. I WAS CONCERNE DTHE PROBLEM WOULD HAPPEN AGAIN WHILE DRIVING *AK
Additional Summary:

Toyota ID No:
NHTSA ODI No: 10195610
Date of Incident: 20070619
Vehicle: 2005 TOYOTA CAMRY
Location of Incident: BALTIMORE, MD
NHTSA Summary:
TL*THE CONTACT OWNS A 2005 TOYOTA CAMRY. THE CONTACT STATED THAT THE VEHICLE ACCELERATED AUTOMATICALLY TO 45 MPH AS SHE WAS PULLING INTO A PARKING SPACE. THERE WERE NO WARNING INDICATORS. THE VEHICLE STRUCK A CEMENT BLOCK. THE AIR BAGS FAILED TO DEPLOY. THE VEHICLE SUSTAINED FRONT END DAMAGE AND WAS TOWED AWAY. THE BODY DAMAGE MUST BE REPAIRED BEFORE THE DEALER CAN ATTEMPT TO DIAGNOSE THE CAUSE OF FAILURE. THE CURRENT AND FAILURE MILEAGES WERE 24,000.
Additional Summary:

Toyota ID No:
NHTSA ODI No: 10193705

Date of Incident: 20070621
Vehicle: 2003 TOYOTA CAMRY SOLARA
Location of Incident: LOCKWOOD, NJ
NHTSA Summary:
TL*THE CONTACT OWNS A 2003 TOYOTA CAMRY SOLARA. ON JUNE 21, 2007, THE VEHICLE SURGED WHILE PULLING INTO A PARKING SPACE AT 7 MPH. THE VEHICLE ACCELERATED SO QUICKLY THAT IT WHIPPED THE CONTACT'S HEAD BACK AND LEFT SKID MARKS ON THE GROUND. SHE HAD TO REMOVE HER FOOT FROM THE BRAKE AND DEPRESS THE BRAKE PEDAL AGAIN BEFORE THE VEHICLE FINALLY STOPPED. THE CONTACT STATED THAT THERE WAS AN INVESTIGATION OF DODGE - VEHICLE SPEED CONTROL, ACCELERATOR PEDAL; THAT WAS CLOSED IN APRIL. THE CONTACT STATED THAT SHE WOULD TAKE HER VEHICLE TO THE DEALER THE FOLLOWING MORNING. THE CURRENT AND FAILURE MILEAGES WERE 67,000.
Additional Summary:

Toyota ID No:
NHTSA ODI No: 10195086
Date of Incident: 20070627
Vehicle: 2002 TOYOTA CAMRY
Location of Incident: GREEN BAY, WI
NHTSA Summary:
DELAYED RESPONSE OF ENGINE AND FORWARD MOTION OF THE CAR WHEN APPLYING ACCELERATION. FOR LACK OF BETTER WORDS, IT SEEMS TO CREATE A REVVING OR SURGE IN THE ENGINE...LIKE SOMETHING IS OUT OF SYNCH. OTHER ISSUES RELATE TO PERSISTENT PROBLEMS WITH THE HYDRAULIC BRAKE AND GRINDING IN THE STEERING COLUMN THAT HAVE BEEN DISMISSED BY THE DEALERSHIP THAT WORKS ON MY CAR. AS OF TODAY, I CANNOT SAFELY DRIVE MY CAR BECAUSE I AM NOT CONFIDENT I WILL BE ABLE TO STOP THE CAR. I AM SCHEDULED TO BRING THE CAR IN THIS WEEK, BUT WILL NEED TO EXPEDITE IT GIVEN THE RAPID CHANGE IN BRAKE RESPONSE IN THE LAST FEW DAYS. *TR
Additional Summary:

Toyota ID No:
NHTSA ODI No: 10207472
Date of Incident: 20070708
Vehicle: 2006 TOYOTA HIGHLANDER
Location of Incident: BELLEVUE, WA
NHTSA Summary:
I ACCELERATED TO AVOID A COLLISION AT LOW SPEED IN AN INTERSECTION. THE CAR HESITATED ABOUT 2 SECONDS AFTER I PRESSED THE GAS PEDAL, THEN LURCHED FORWARD, SPINNING THE DRIVE WHEELS. THE LENGTH OF DELAY OR HESITATION IN RESPONSE TO ACCELERATOR INPUT IS FREQUENTLY THERE, BUT IS SOMEWHAT UNPREDICTABLE, MAKING STOP-AND-GO TRAFFIC PERFORMANCE DANGEROUS. POOR PERFORMANCE OF THE CRUISE CONTROL FUNCTION IS PROBABLY RELATED TO THIS DEFECT. THE CAR WAS RETURNED TO THE DEALER FOR SERVICE AT 1500 MILES. THE DEALER DID A THOROUGH CHECK OF THE EQUIPMENT AND FOUND NO DEFECTIVE PARTS. DEALER STATES THAT THERE ARE NO SERVICE BULLETINS FOR THIS PROBLEM, IN SPITE OF THE FACT THAT TOYOTA HAS ACKNOWLEDGED THIS PROBLEM AND PROMISED TO FIX IT SINCE DECEMBER 2004. THIS IS A SERIOUS PROBLEM. HAD THE PAVEMENT BEEN WET, I COULD HAVE LOST CONTROL OF THE VEHICLE. FORTUNATELY, IN THE INCIDENT DESCRIBED, THE OTHER DRIVER WAS ABLE TO AVOID A COLLISION. NEXT TIME, I MIGHT NOT BE SO LUCKY. *TR
Additional Summary:

Toyota ID No:
NHTSA ODI No: 10209500
Date of Incident: 20070712
Vehicle: 2004 TOYOTA 4RUNNER
Location of Incident: ORLEANS, MA
NHTSA Summary:
TL*THE CONTACT OWNS A 2004 TOYOTA 4 RUNNER. WHILE DRIVING APPROXIMATELY 15 MPH ON NORMAL ROAD CONDITIONS, PROCEEDING TO A STOP SIGNAL, PRESSURE WAS APPLIED TO THE BRAKE PEDAL, FOLLOWED BY AN UNINTENDED AND FORCEFUL ACCELERATION. THE DRIVER WAS ABLE TO COME TO A COMPLETE STOP. THE FAILURE OCCURRED INTERMITTENTLY. THE VEHICLE WAS TAKEN TO AN AUTHORIZED DEALER FOR INSPECTION. THE TECHNICIAN WAS UNABLE TO DUPLICATE THE FAILURE. THE VEHICLE HAS NOT BEEN REPAIRED. THE FAILURE MILEAGE WAS 50,000. THE CURRENT MILEAGE WAS 111,000. THE VIN WAS UNAVAILABLE. I
Additional Summary:

Toyota ID No:
NHTSA ODI No: 10204153
Date of Incident: 20070720
Vehicle: 2005 LEXUS ES330
Location of Incident: AUSTIN, TX
NHTSA Summary:
TL*THE CONTACT OWNS A 2005 LEXUS ES330. WHILE ATTEMPTING TO MAKE A RIGHT TURN AT 20 MPH, THE VEHICLE ACCELERATED TO APPROXIMATELY 90 MPH ACROSS FOUR LANES OF TRAFFIC. THE VEHICLE CRASHED INTO A METAL POLE. THE POLICE, AMBULANCE, AND FIRE DEPARTMENTS ARRIVED AT THE SCENE. THE CONTACT SUFFERED MULTIPLE INJURIES AND WAS TRANSPORTED TO THE HOSPITAL. APPROXIMATELY ONE YEAR AGO, THE VEHICLE SPEED CONTROL FAILED AND CAUSED A CRASH WHILE DRIVING IN REVERSE. THE POWERTRAIN WAS UNKNOWN. THE APPROXIMATE CURRENT AND FAILURE MILEAGES WERE 50,000. *UPDATED 12/12/07 *BF UPDATED 12/12/07 *TR
Additional Summary:

Toyota ID No:
NHTSA ODI No: 10196482
Date of Incident: 20070810
Vehicle: 2006 LEXUS LS470
Location of Incident: LITCHFIELD, CT
NHTSA Summary:
TL*THE CONTACT OWNS A 2006 LEXUS LS470. WHILE PULLING INTO A PARKING SPACE ON AN INCLINE, THE VEHICLE AUTOMATICALLY ACCELERATED AND CRASHED INTO A NAIL SALON. THE DEALER STATED THAT THE FAILURE WAS CALLED AN UN-COMMANDED ACCELERATION. THROUGH RESEARCH, THE CONTACT DISCOVERED A PATTERN FOR THIS TYPE OF FAILURE AMONG TOYOTA VEHICLES. SHE HAS NOT YET NOTIFIED THE MANUFACTURER. THE VEHICLE IS NOT DESTROYED. HOWEVER, THERE IS $22,000 WORTH OF DAMAGE. A POLICE REPORT WAS FILED. WHEN THE VEHICLE WAS STARTED THE DAY BEFORE THE CRASH, THE THROTTLE EXPANDED AND THE ENGINE BEGAN TO REV. THE VEHICLE THEN IDLED DOWN AND BEGAN TO OPERATE NORMALLY. THE CONTACT STATED THAT THE VEHICLE DID NOT MOVE UNTIL THE ENGINE DIED DOWN. THE SPEED WAS UNKNOWN. THE FAILURE AND CURRENT MILEAGES WERE 35,000.

THE CONSUMER PROVIDED PICTURES AND AN ARTICLE PERTAINING TO THE INCIDENT. A CONNECTICUT ACCIDENT REPORT WAS ALSO SUBMITTED. UPDATED 08/28/07 *TR
Additional Summary:

Toyota ID No:
NHTSA ODI No: 10296353
Date of Incident: 20070811
Vehicle: 2003 TOYOTA CAMRY
Location of Incident: BEDFORD, TX
NHTSA Summary:
TL* THE CONTACT OWNS A 2003 TOYOTA CAMRY. WHILE MAKING A LEFT TURN THE VEHICLE BEGAN TO ACCELERATE. AS A CONSEQUENCE, SHE CRASHED INTO A PARKED VEHICLE. THE VEHICLE WAS COMPLETELY DESTROYED. AFTER THE CRASH SHE SUFFERED MANY BRUISES AND A BROKEN COLLAR BONE. SHE WAS TAKEN TO THE HOSPITAL FOR THE INJURIES. THE MANUFACTURER WENT TO INSPECT THE TOTALED VEHICLE TO EXAM THE ELECTRONIC THROTTLE BODY COMPUTER BUT THE DAMAGE TO THE VEHICLE IMPACTED THE COMPUTER ITSELF. THE FAILURE MILEAGE WAS 25,000.
Additional Summary:

Toyota ID No:
NHTSA ODI No: 10286788
Date of Incident: 20070815
Vehicle: 2004 TOYOTA CAMRY
Location of Incident: KENT, WA
NHTSA Summary:
DRIVING 2004 TOYOTA CAMRY WHEN SUDDEN ACCELERATION OCCURRED AND VEHICLE RAN INTO A SENIOR CENTER BUILDING. NO ONE WAS KILLED, BUT THE CAR HAS MAJOR DAMAGE. *TR
Additional Summary:

Toyota ID No:
NHTSA ODI No: 10303559
Date of Incident: 20070815
Vehicle: 2003 TOYOTA CAMRY
Location of Incident: PARAGOULD, AR
NHTSA Summary:
SOMETIMES WHEN I'M DRIVING DOWN THE ROAD IN MY 2003 TOYOTA CAMRY, IT SURGES WITH GAS EVEN WHEN I DO NOT HAVE THE CRUISE ON OR AM NOT PUSHING THE GAS PEDAL. I HAVE HAD ONE WRECK BECAUSE OF IT AND WOULD LIKE TO KNOW HOW TO GO ABOUT FIXING THE PROBLEM. THANKS. *TR
Additional Summary:

Toyota ID No:
NHTSA ODI No: 10300756
Date of Incident: 20070815
Vehicle: 2001 TOYOTA SIENNA
Location of Incident: MICHIGAN CITY, IN
NHTSA Summary:
LEFT OUR HOME ABOUT 1045A. PUT VAN INTO "DRIVE" AFTER PULLING OUT OF DRIVEWAY IN REVERSE. UNABLE TO STOP WITH THE BRAKES AT STOP SIGN. APPROX 8-1 MILES FROM START. CAR BEGAN TO ACCELERATE ON ITS OWN, THROUGH THE STOP

SIGN, THROUGH A RIGHT HAND TURN, THROUGH A LEFT HAND TURN. ACCELERATOR PEDAL WAS "STUCK" ACCIDENT REPORT WAS ALSO SUBMITTED. UPDATED 08/28/07 *TR
Additional Summary:

Toyota ID No:
NHTSA ODI No: 10300951
Date of Incident: 20070819
Vehicle: 2003 TOYOTA CAMRY
Location of Incident: GUNTERSVILLE, AL
NHTSA Summary:
UNINTENDED ACCELERATION OCCURRED WHILE OPERATING AT SLOW SPEED RESULTING IN A COLLISION WITH PARKED VEHICLES AND DEPLOYMENT OF AIRBAG. MY WIFE IS THE PRIMARY DRIVER OF THE VEHICLE AND HAS COMPLAINED ON AT LEAST TWO PREVIOUS OCCASIONS THAT, WHILE PARKING, THE ANTI-LOCK BRAKING SYSTEM ACTIVATED AND THE CAR ACCELERATED WITH HER FOOT ON THE BRAKE PEDAL. THIS OCCURRED WHILE TRAVELING AT APPROXIMATELY 5 TO 10 MPH IN A RIGHT TURN. ON ONE OTHER OCCASION SHE STATED THAT THE BRAKES WOULD NOT STOP THE CAR AND THE ENGINE SPEEDED UP AS SHE WAS BRAKED FOR AN INTERSECTION ? AGAIN SHE STATED THAT THE ANTI-LOCK BRAKES ACTIVATED REDUCING BRAKING EFFECTIVENESS AND ALLOWING THE ENGINE TO ACCELERATE THE CAR. I TEST DROVE THE CAR EACH TIME AND FOUND THAT IT OPERATED NORMALLY. THESE EVENTS HAVE OCCURRED DURING THE 3 YEARS WE HAVE OWNED THE CAR. THE ACCELERATION DURING THE LAST EVENT WAS STRONGER AND RESULTED IN A CRASH. MY WIFE HAS A GOOD DRIVING RECORD. KNOWS IF SHE IS DEPRESSING GAS PEDAL INSTEAD OF THE BRAKE PEDAL, AND THE FLOOR MAT WAS NOT A FACTOR. THE 2003 TOYOTA CAMRY WAS NEW WHEN WE PURCHASED IT. THE CAR HAS IS LOCATED AT A LOCAL AUTO BODY SHOP FOR REPAIR. *JB
Additional Summary:

Toyota ID No:
NHTSA ODI No: 10300717
Date of Incident: 20070824
Vehicle: 2005 TOYOTA CAMRY SOLARA
Location of Incident: MEDFORD, NY
NHTSA Summary:
I WAS SURPRISED TO SEE HOW MANY IDENTICAL COMPLAINTS THERE WERE CONCERNING THE ACCELERATION LAG WITH THE 4 CYLINDER '05 SOLARA. MY COMPLAINTS TO TOYOTA YIELDED NO RESULTS. THE CAR HESITATES WHEN SLOWING THEN ACCELERATING THEN JUMPS FORWARD. SAME PROBLEM WHEN ACCELERATING TO MERGE WITH TRAFFIC. MANY CLOSE CALLS AND SNAPPING OF THE MUTE ON ACCELERATION. DRIVE BY WIRE IS POOR SUBSTITUTION FOR DRIVE BY MECHANISM. *TR
Additional Summary:

Toyota ID No:
NHTSA ODI No: 10301029
Date of Incident: 20070825
Vehicle: 2001 TOYOTA CAMRY

Location of Incident: FALLS CHURCH, VA
NHTSA Summary:
TL *THE CONTACT OWNS A 2003 TOYOTA CAMRY. WHILE PULLING INTO A PARKING SPACE BETWEEN 2-5 MPH, THE ENGINE BEGAN TO REV. THE VEHICLE SURGED FORWARD WHEN THE CONTACT APPLIED MORE PRESSURE TO THE BRAKE PEDAL. THE VEHICLE CRASHED INTO A CONCRETE WALL AND THE AIR BAGS FAILED TO DEPLOY. HER KNEES WERE BADLY BRUISED. THE HOOD AND FRONT BUMPER WERE DAMAGED, BUT THE MAJORITY OF THE DAMAGE WAS ON THE PASSENGER SIDE OF THE VEHICLE. THE SIDE PANELS WERE MOVED AND MISALIGNED, WHICH IMPACTS THE OPENING AND CLOSING OF THE DOORS. THE PURCHASE DATE WAS UNKNOWN. THE CURRENT AND FAILURE MILEAGES WERE 98,500.
Additional Summary:

Toyota ID No:
NHTSA ODI No: 10290867
Date of Incident: 20070825
Vehicle: 2004 LEXUS LS
Location of Incident: PALM BEACH GARDENS, FL
NHTSA Summary:
UNINTENDED ACCELERATION. AS I WAS PARKING THE VEHICLE SUDDENLY ACCELERATED AND JUMPED THE CURB AND RAN INTO THE BUILDING. I TRIED TO BACK OFF THE BUILDING AND COULD NOT STOP THE RACING ENGINE. THE VEHICLE SHOT BACKWARDS EVEN THOUGH I WAS ON THE BRAKE. IT WENT THROUGH SOME HEDGES OVER A RISE AND CROSSED THE STREET WHERE THE REAR HIT A PALM TREE AND COLLAPSED THE TRUNK. BOTH THE FRONT AND REAR WERE SEVERELY DAMAGED. NO AIR BAGS DEPLOYED. *TR
Additional Summary:

Toyota ID No:
NHTSA ODI No: 10301231
Date of Incident: 20070827
Vehicle: 2007 TOYOTA RAV4
Location of Incident: EVANS, GA
NHTSA Summary:
HESITATION WHEN TRYING TO PRESS GAS PEDAL SMOOTHLY FROM A STOP. THIS COULD CAUSE AN ACCIDENT WHEN I BELIEVE I HAVE ENOUGH TIME TO GET OUT ON MAIN HIGHWAY FROM SIDE STREET AND THE SUV WONT GO. TOOK TO DEALER, WHO SAID NORMAL. CRUISE DOES NOT WORK PROPERLY ON INCLINES. IT WILL JERK BACK AND FORTH UNTIL CRUISE TURNED OFF. MECHANIC RODE WITH ME AND SAID THIS DID NOT HAPPEN[illegible] BUT TOYOTA HAS NO EXPLAN FOR IT AT PRESENT. THEY DO NOT KNOW WHEN. CALLED TOYOTA CALL CENTER. THEY SAID THIS VEHICLE NOT MEANT TO USE CRUISE ON INCLINE[illegible] WHY PUT IT ON THE VEHICLE? PUT ON LEVEL ROAD. TAKE OFF WHEN SEE HILL APPROACHING-WHAT A JOKE[illegible]. NEVER HAD A VEHICLE IN MY LIFE WHERE THE CRUISE WAS NOT MEANT TO BE USED AT ALL POINTS OF DRIVING. TOLD BY DEALER SHIP TO WAIT. THIS VEHICLE IS NEW AND I DO NOT WANT TO WAIT.
Additional Summary:

Toyota ID No:
NHTSA ODI No: 10301258
Date of Incident: 20070830
Vehicle: 2004 TOYOTA CAMRY
Location of Incident: AGOURA HILLS, CA

NHTSA Summary:
TL*THE CONTACT OWNS A 2004 TOYOTA CAMRY. WHILE AT A COMPLETE STOP, THE CONSUMER STATED TRIED TO APPLY THE BREAKS BUT TO NO AVAIL. THE VEHICLE ACCELERATED WITHOUT WARNING AND CRASHED INTO AN OFFICE BUILDING OFF DERBY AVE. THE TIRES WERE STILL SPINNING AFTER THE CRASH. THE HEAVY STEEL SHRUBS AND DESKS WERE DESTROYED. AN INSURANCE CLAIM WAS FILED. THE VEHICLE HAS NOT BEEN INSPECTED BY THE DEALER. THE CURRENT AND FAILURE MILEAGES WERE 38,140. UPDATED 10/05/04 *TR
Additional Summary:

Toyota ID No:
NHTSA ODI No: 10284896
Date of Incident: 20070901
Vehicle: 2006 SCION XB
Location of Incident: MILWAUKEE, WI
NHTSA Summary:
TL *THE CONTACT OWNS A 2006 TOYOTA SCION XB. WHILE DRIVING APPROXIMATELY 20 TO 30 MPH, THE HEADLIGHTS DIMMED AND VISIBILITY WAS REDUCED. THE LIGHTS WOULD ILLUMINATE AGAIN MOMENTS LATER. WHILE DRIVING 30 MPH UPHILL, THE VEHICLE ACCELERATED TO 60 MPH. THE BRAKES WERE APPLIED, BUT WOULD NOT FUNCTION UNLESS THEY WERE ENGAGED AT A RAPID RATE. OCCASIONALLY THE ENGINE SHUTS OFF. THE FRONT END SHAKES WHILE DRIVING 20-30 MPH, AND THE CRUISE CONTROL SWITCH FAILED TO ENGAGE. THE VEHICLE CONTINUED TO BURN AN EXCESSIVE AMOUNT OF FUEL AFTER THE OIL WAS CHANGED AND THE CHECK ENGINE LIGHT ILLUMINATED. THE RADIO FAILED AND THE DEALER STATED THAT THEY WOULD REPLACE IT WHEN THE PARTS ARRIVE. THE MECHANIC STATED THAT THE BACK OF THE BUMPER WAS SPLIT, WHICH CAUSED IT TO FALL OFF OF THE VEHICLE. THE DEALER ALSO OFFERED BETWEEN $14,000 FOR THE VEHICLE ONLY IF SHE PAID THEM $5,000. THE DEALER WAS UNABLE TO DUPLICATE THE FAILURE; HOWEVER, THEY STATED THAT THE FAILURES WERE ELECTRICAL. THE FAILURE MILEAGE WAS 400 AND CURRENT MILEAGE WAS 12,000. UPDATED 02-14-06. *KB
Additional Summary:

Toyota ID No:
NHTSA ODI No: 10302159
Date of Incident: 20070808
Vehicle: 2005 TOYOTA COROLLA
Location of Incident: LOUISVILLE, KY
NHTSA Summary:
I WAS EATING A RESTAURANT WAITING TO TURN RIGHT ON A BUSY HIGHWAY. WHILE SITTING THERE WITH THE CAR IN DRIVE AND MY FOOT ON THE BRAKE PEDAL, THE ENGINE SUDDENLY STARTED RACING. THE CAR SURGED FORWARD A COUPLE OF FEET BUT I PRESSED HARDER ON THE BRAKE PEDAL AND STOPPED IT AGAIN. I PUT THE CAR IN NEUTRAL AND TAPPED THE GAS PEDAL A COUPLE OF TIMES BUT THE ENGINE KEPT RACING VERY FAST. I FINALLY PUT THE CAR IN PARK AND TURNED THE KEY OFF. AFTER RESTARTING THE CAR, IT SEEMED TO BE FINE EXCEPT THE IDLE SEEMED TO BE A LITTLE BIT FASTER THAN NORMAL. TOOK THE CAR TO A TOYOTA DEALER THE NEXT DAY BUT THEY WERE UNABLE TO DUPLICATE THE PROBLEM AND SAID THEY COULD NOT FIND ANYTHING WRONG. I WAS ASKED SEVERAL TIMES WHETHER MY FOOT COULD HAVE BEEN ON THE BRAKE AND GAS PEDALS AT THE SAME TIME BUT I AM ABSOLUTELY SURE THIS WAS NOT THE CASE. PLEASE REFERENCE ODI ID NUMBERS 10109672, 10175082, 10177143, 10125971, 10163670, 10200923, 10163347, 10166526 FOR SIMILAR COMPLAINTS RELATED TO 2005 AND 2006 COROLLAS. *TR UPDATED 01-16-06. *KB

Additional Summary:

Toyota ID No:
NHTSA ODI No: 10202368
Date of Incident: 20070905
Vehicle: 2005 TOYOTA TACOMA
Location of Incident: SAN JOSE, CA
NHTSA Summary:
I WAS THE NUMBER 2 VEHICLE AT A RED LIGHT. FIRST CAR WENT THROUGH (THINKING THE LIGHT HAD CHANGED). SECOND CAR MOVED INTO FIRST PLACE. I STARTED TO FOLLOW AND WHEN I REALIZED HE HAD STOPPED I APPLIED MY BRAKES. I COULD FEEL THE TRUCK LURCH EVEN THOUGH I WAS STILL PRESSING THE BRAKES AS HARD AS POSSIBLE. I SLAMMED INTO HIM AND CAUSED DAMAGE TO BOTH VEHICLES. MY FOOT WAS NOT ON THE GAS PEDAL AT ALL. *TR
Additional Summary:

Toyota ID No:
NHTSA ODI No: 10204912
Date of Incident: 20070907
Vehicle: 2004 TOYOTA PRIUS
Location of Incident: CRESWELL, OR
NHTSA Summary:
2007 TOYOTA PRIUS WITH ACCELERATION AND BRAKE PROBLEMS. CUSTOMER STATED WHEN SHE RELEASED HER FOOT FROM THE BRAKE PEDAL THE VEHICLE RACED FORWARD WHILE MAKING A LOUD NOISE. THE BRAKES WERE REAPPLIED BUT IT DID NOT STOP THE VEHICLE. *KB. THE CONSUMER WAS ABLE TO VEER SLIGHTLY TO THE LEFT TO AVOID AN ACCIDENT. THE VEHICLE FINALLY STOPPED AFTER LURCHING ABOUT 50 TO 80 FEET WELL BEYOND THE STOP SIGN AND INTO THE INTERSECTION. THE DEALER WAS UNABLE TO DUPLICATE THE PROBLEM. *JB
Additional Summary:

Toyota ID No:
NHTSA ODI No: 10204147
Date of Incident: 20070909
Vehicle: 2006 TOYOTA CAMRY
Location of Incident: SOUTHINGTON, CT
NHTSA Summary:
TL* THE CONTACT OWNS A 2006 TOYOTA CAMRY. WHILE PARKING, THE VEHICLE RAPIDLY ACCELERATED OVER A CURB AND THROUGH THE GLASS OF A STORE-FRONT. A POLICE REPORT WAS FILED. HE CALLED THE TOYOTA MANUFACTURER AND FILED A COMPLAINT. HOWEVER HE HAS NOT RECEIVED A RESPONSE. THE DAMAGES TO THE VEHICLE AND THE STORE FRONT WERE OVER $17,000. THE CURRENT MILEAGE WAS 20,000. THE VIN WAS UNAVAILABLE.
Additional Summary:

Toyota ID No:
NHTSA ODI No: 10216514
Date of Incident: 20070911
Vehicle: 2007 TOYOTA COROLLA
Location of Incident: PASADENA, CA
NHTSA Summary:

TL*THE CONTACT OWNS A 2007 TOYOTA COROLLA. WHILE ATTEMPTING TO PARK THE VEHICLE, IT SURGED FORWARD AND CAUSED A MINOR CRASH. ONE YEAR LATER, WHILE ATTEMPTING TO DRIVE UPHILL WITH THE ACCELERATOR PEDAL SLIGHTLY DEPRESSED, THE FAILURE RECURRED. THE CONTACT STRUCK A METAL POST. THERE WERE NO PRIOR WARNINGS BEFORE THE FAILURES OCCURRED. SHE IS CURRENTLY IN THE PROCESS OF HAVING THE VEHICLE INSPECTED. THE SPEED WAS UNKNOWN. THE FAILURE MILEAGE WAS 1,500 AND CURRENT MILEAGE WAS 2,700.
Additional Summary:

Toyota ID No:
NHTSA ODI No: 10203415
Date of Incident: 20070914
Vehicle: 2005 TOYOTA CAMRY
Location of Incident: TREVOSE, PA
NHTSA Summary:
TL*THE CONTACT OWNS A 2005 TOYOTA CAMRY. WHILE DRIVING 2 MPH, THE VEHICLE SURGED FORWARD WITHOUT WARNING WHILE THE BRAKE PEDAL WAS DEPRESSED. THE VEHICLE CRASHED INTO A WALL. A POLICE REPORT WAS FILED. THE DEALER WAS UNABLE TO DUPLICATE THE FAILURE. THE CURRENT AND FAILURE MILEAGE WERE 24,000.
Additional Summary:

Toyota ID No:
NHTSA ODI No: 10201274
Date of Incident: 20070917
Vehicle: 2006 TOYOTA RAV4
Location of Incident: CAMBRIDGE, NY
NHTSA Summary:
OUR 2006 TOYOTA RAV4 HAS HAD ISSUES ON SEVERAL OCCASIONS OF EITHER HESITATING WHEN THE GAS PEDAL IS PRESSED OR LUNGING FORWARD WHEN TRYING TO SLOW DOWN FOR TRAFFIC OR A STOP LIGHT. WE HAVE MADE SEVERAL COMPLAINTS TO OUR DEALER, BUT THEY KEEP SAYING NOTHING IS WRONG. WE FEEL THIS CAR IS UNSAFE RELIABLE AT THIS POINT. *JB
Additional Summary:

Toyota ID No:
NHTSA ODI No:
Date of Incident: 20070920
Vehicle: 2005 TOYOTA CAMRY
Location of Incident: YUKON, OK
NHTSA Summary:
"One woman was killed and another injured in a one-car collision Thursday night about three miles north of town. According to the Oklahoma Highway Patrol, Jean Bookout, 78, of Yukon was driving a 2005 Toyota Camry south on U.S. 62 at a high rate of speed at about 6:30 p.m. Thursday. Bookout, the OHP report states, failed to negotiate a curve and her car careened into a ditch on Texoma Road. Bookout was transported by helicopter to St. John Medical Center in Tulsa, where she was treated for head injuries. Bookout was listed in serious condition Friday. A passenger, Barbara Schwarz, 78, also of Yukon, was transferred from Mustang Regional Medical Center by helicopter to St. John Medical Center, where she later died. The OHP report states safety belts were in use by both occupants. The air bag did not deploy."
Additional Summary:

Toyota ID No:
NHTSA ODI No: 10207089
Date of Incident: 20070920
Vehicle: 2000 LEXUS ES
Location of Incident: DELRAY BEACH, FL
NHTSA Summary:
MY WIFE WAS PULLING INTO A PARKING SPOT AT A VERY LOW RATE OD SPEED ACCELERATOR STUCK AND COULD NOT BE RELEASED. CAR SPED UP AND HIT FOUR OTHER CARS. TOTAL DAMAGE TO ALL CARS EXCEEDED $40,000.00 AND MY WIFE WAS INJURED WHEN AIR BAG INFLATED. *TR
Additional Summary:

Toyota ID No:
NHTSA ODI No: 10204488
Date of Incident: 20071001
Vehicle: 2003 TOYOTA HIGHLANDER
Location of Incident: PASADENA, TX
NHTSA Summary:
WHILE ATTEMPTING TO PARK MY 2003 TOYOTA HIGHLANDER AT A MCDONALD'S, AS I WAS APPLYING THE BRAKE AND ALMOST PARKED, THE CAR SUDDENLY ACCELERATED, JUMPED THE CURB AND CRASHED THROUGH THE ENTRANCE OF THE MCDONALD'S. I CONTINUED TO APPLY THE BRAKE WHEN THIS HAPPENED, AND IT WOULD NOT STOP. *JB
Additional Summary:

Toyota ID No:
NHTSA ODI No: 10209096, 10208396
Date of Incident: 20071005
Vehicle: 2003 TOYOTA CAMRY
Location of Incident: REVERE, MA
NHTSA Summary:
TL*THE CONTACT OWNS A 2003 TOYOTA CAMRY. THE CONTACT SWITCHED GEARS FROM NEUTRAL TO DRIVE AND THE VEHICLE ACCELERATED TO MAXIMUM SPEED. THE ACCELERATOR PEDAL WAS STUCK AND THE VEHICLE WOULD NOT STOP. SHE DROVE INTO SOME BUSHES AND TREES THAT WERE IN FRONT OF A TWO FOOT WALL. THE UNDERCARRIAGE, TRANSMISSION HOUSING, TIE RODS AND BUMPER WERE ALL DAMAGED. THE REPAIRS WOULD COST $5,500. THE FIRE AND POLICE DEPARTMENT0 ALONG WITH AN AMBULANCE ARRIVED AT THE SCENE. A POLICE REPORT WAS FILED. THE VEHICLE WAS TOWED AND THE CONTACT REFUSED TO GO TO A HOSPITAL. EVEN THOUGH HER BLOOD PRESSURE WAS 200. THE DEALER STATED THAT NOTHING COULD BE DONE. THE SPEED WAS UNKNOWN. THE CURRENT AND FAILURE MILEAGES WERE 61,500. SEE ODI 10208396 ALSO. *DSV; TL*THE CONTACT OWNS A 2003 TOYOTA CAMRY. THE CONTACT STATED THAT THE VEHICLE ACCELERATED AT AN UNKNOWN SPEED WITHOUT WARNING WHEN THE GEAR WAS SHIFTED INTO DRIVE. AS A RESULT, THE VEHICLE TRAVELED APPROXIMATELY 200 YARDS AND THEN CRASHED INTO A WALL. THE CONTACT STATED THAT THE ACCELERATOR PEDAL STUCK AND SHE WAS UNABLE TO DEPRESS THE BRAKE PEDAL. THE AIR BAG FAILED TO DEPLOY. NHTSA CAMPAIGN ID NUMBER 04V346000 (AIR BAGS: SIDE/WINDOW) WAS REFERENCED. A POLICE REPORT WAS FILED. THE INSURANCE INSPECTOR FELT THAT THE ELECTRICAL SYSTEM CAUSED THE FAILURE. AS OF OCTOBER 25, 2007, THE MANUFACTURER HAD NOT INSPECTED THE VEHICLE. THE CURRENT AND FAILURE MILEAGES WERE 41,000. SEE 10209096 ALSO. *DSV, UPDATED 10/31/08. *LJ
Additional Summary:

Toyota ID No:
NHTSA ODI No: 10205755
Date of Incident: 20071006
Vehicle: 2007 LEXUS RX400H
Location of Incident: HOMESTEAD, FL
NHTSA Summary:
TL*THE CONTACT OWNED A 2007 RX400 LEXUS HYBRID. WHILE DRIVING 35 MPH AND ENGAGING THE BRAKES, THE MAT WAS BETWEEN THE ACCELERATOR AND THE BRAKES PREVENTED THE CONTACT FROM BRAKING. THE CONTACT CRASHED INTO A VEHICLE ON THE DRIVER'S SIDE REAR. THE CONTACT'S VEHICLE WAS TOTALED. THE OTHER VEHICLE SUSTAINED DAMAGE TO THE DRIVER'S SIDE BUMPER, THE BACK WINDOW SHATTERED, AND THE DRIVER'S REAR WHEEL WELL WAS DAMAGED. THE CONTACT SUSTAINED INJURIES TO HER CHEST AND BACK WHEN THE DRIVER SIDE AIR BAG DEPLOYED. THE DRIVER'S SIDE FOOT AIR BAG ALSO DEPLOYED. PICTURES ARE AVAILABLE. THE PURCHASE DATE WAS 08/04/2007. A POLICE REPORT IS AVAILABLE. THE DEALER INFORMATION IS NOT AVAILABLE. THE CURRENT AND FAILURE MILEAGES WERE 2,300.
Additional Summary:

Toyota ID No:
NHTSA ODI No: 10205212
Date of Incident: 20071008
Vehicle: 2006 TOYOTA SEQUOIA
Location of Incident: CLARKSVILLE, TN
NHTSA Summary:
UNCONTROLLED ACCELERATION WHEN USING THE RESUME FEATURE IN THE CRUISE CONTROL. *JB
Additional Summary:

Toyota ID No:
NHTSA ODI No: 10205725
Date of Incident: 20071009
Vehicle: 2000 TOYOTA TACOMA
Location of Incident: GLENDORA, CA
NHTSA Summary:
TL*THE CONTACT OWNS A 2000 TOYOTA TACOMA. WHILE DRIVING APPROXIMATELY 70 MPH ON NORMAL ROAD CONDITIONS, THE CRUISE CONTROL WAS DISENGAGED AND THE VEHICLE RAPIDLY BEGAN ACCELERATING. THE VEHICLE FAILED TO SLOW DOWN; HOWEVER, THE CONTACT WAS ABLE TO SHUT THE ENGINE OFF AND RESTART THE VEHICLE. THE CONTACT DROVE THE VEHICLE TO A NEARBY SERVICE STATION AND DETERMINED THAT THE FAILURE WAS CONTRIBUTED TO THE THROTTLE BODY CABLE CONNECTER. THE VEHICLE WAS REPAIRED. THE CONTACT HAS CONCERNS OF THE SAFETY RISK INVOLVED. THE FAILURE MILEAGE WAS 90,000 AND THE CURRENT MILEAGE WAS 120,000.
Additional Summary:

Toyota ID No:
NHTSA ODI No: 10206380
Date of Incident: 20071015
Vehicle: 2005 TOYOTA CAMRY
Location of Incident: HOLIDAY, FL

NHTSA Summary:
TL*THE CONTACT OWNS A 2005 TOYOTA CAMRY. WHILE IDLING, THE VEHICLE REVS AND ACCELERATES ON ITS OWN. THE VEHICLE WAS TAKEN TO THE DEALER FOUR TIMES, BUT THEY HAVE BEEN UNABLE TO DUPLICATE THE FAILURE. THE CURRENT MILEAGE WAS 33,500 AND FAILURE MILEAGE WAS 28,000.
Additional Summary:

Toyota ID No:
NHTSA ODI No: 10291013
Date of Incident: 20071015
Vehicle: 2005 LEXUS ES330
Location of Incident: VERNON HILLS, IL
NHTSA Summary:
2005 LEXUS ES330 LEASED NEW IN AUGUST, 2005. I OVERTOOK A SLOW MOVING VEHICLE IN FRONT OF ME AND TRIED TO EASE OFF BACK INTO THE LANE. INSTEAD, THE CAR BEGAN ACCELERATING: 2K RPM, 3K RPM, 4K RPM, ALMOST REDLINING. I PUT ON THE BRAKES AND KEPT HOLDING THE BRAKE PEDAL DOWN. PUSHING ACCELERATOR PEDAL DOWN WAS NO HELP. INSTEAD, I SHIFTED TO NEUTRAL AND AFTER ABOUT 10 SECONDS (FELT LIKE ETERNITY SINCE SHIFTING TO NEUTRAL DID NOT HELP) TURNED THE IGNITION KEY OFF. THE CAR STOPPED. AFTER SEVERAL MINUTES OF COLLECTING MYSELF, I TURNED THE IGNITION KEY BACK ON AND THE VEHICLE BEHAVED NORMALLY. AFTER THAT EXPERIENCE I ALWAYS MADE SURE I DID NOT ACCELERATE QUICKLY. THE CAR WAS RETURNED BACK TO THE DEALER AFTER THE ORIGINAL LEASE EXPIRED LAST YEAR. I CAN ASSURE YOU FLOORMAT WASN'T THE PROBLEM. I AM CONCERNED THAT TOYOTA ONLY ISSUED RECALL ON 2007, LEXUS ES300 MODELS. THEY SHOULD ALSO INCLUDE PREVIOUS ES330 MODEL AS WELL. *TR
Additional Summary:

Toyota ID No:
NHTSA ODI No: 10285934
Date of Incident: 20071017
Vehicle: 2007 LEXUS ES350
Location of Incident: EL PASO, TX
NHTSA Summary:
TL*THE CONTACT OWNS A 2007 LEXUS ES350. WHEN ATTEMPTING TO ENTER A PARKING SPACE, SHE EXPERIENCED UNINTENDED VEHICLE ACCELERATION, WHICH CAUSED HER TO CRASH INTO A WALL. THE VEHICLE WAS TOWED TO A DEALER, HOWEVER, THE TECHNICIANS COULD NOT IDENTIFY THE CAUSE OF THE FAILURE. THE CONTACT IS CONCERNED THAT THE FLOORMAT INTERFERENCE CAUSED THE ACCELERATOR PEDAL TO STICK. THE FAILURE MILEAGE WAS 250 AND THE CURRENT MILEAGE WAS 11,000.
Additional Summary:

Toyota ID No:
NHTSA ODI No: 10286523
Date of Incident: 20071019
Vehicle: 2006 TOYOTA CAMRY
Location of Incident: DALLEJO, CA
NHTSA Summary:
TL*THE CONTACT OWNS A 2006 TOYOTA CAMRY. WHILE TURNING INTO A PARKING SPACE AT APPROXIMATELY 5 MPH, THE VEHICLE RAPIDLY ACCELERATED AND THE RPMS REVVED. THE VEHICLE CRASHED INTO A WALL. THE VEHICLE HAD TO BE SHUT OFF IN ORDER FOR IT TO STOP. THE MANUFACTURER STATED THAT THEY WOULD CALL

HER BACK AND LET HER KNOW IF HER VEHICLE WAS INCLUDED IN NHTSA CAMPAIGN ID NUMBER 05V012000 (VEHICLE SPEED CONTROL). THEY HAVE YET TO CALL. THE CURRENT AND FAILURE MILEAGES WERE 94,000.
Additional Summary:

Toyota ID No:
NHTSA ODI No: 10289350
Date of Incident: 20071020
Vehicle: 2001 TOYOTA AVALON
Location of Incident: LATHAM, NY
NHTSA Summary:
TL*THE CONTACT OWNS A 2001 TOYOTA AVALON. WHILE DRIVING 3 MPH WITH THE BRAKES APPLIED, THE VEHICLE SUDDENLY ACCELERATED. THE CONTACT APPLIED MORE PRESSURE TO THE BRAKES. HOWEVER, THE VEHICLE DID NOT STOP AND CRASHED INTO SOME BUSHES. A POLICE REPORT WAS FILED. THERE WERE NO PRIOR WARNING INDICATORS. THE VEHICLE WAS TOWED. THE DEALER WAS UNABLE TO DUPLICATE THE FAILURE AND THERE WERE NO ERROR CODES. THE PURCHASE DATE WAS UNKNOWN. THE CURRENT AND FAILURE MILEAGES WERE 45,000. NEW YORK POLICE REPORT. UPDATED 12/12/07 *TR
Additional Summary:

Toyota ID No:
NHTSA ODI No: 10286821
Date of Incident: 20071020
Vehicle: 2004 TOYOTA COROLLA
Location of Incident: MIAMI SHORES, FL
NHTSA Summary:
DATE 10/20/2007 THIS SATURDAY MORNING AT 9:05 AM, AFTER MASS AT THE MIAMI ARCHDIOCESE, I HAD A MOST UNPLEASANT EXPERIENCE WITH MY 2004 TOYOTA COROLLA. WHEN I MOVE TO REVERSE MY CAR FROM MY PARKING PLACE, I EXPERIENCED A SUDDEN DRAMATIC INCREASE FROM THE CAR'S IDLE AND A RELEASE OF THE ACCELERATION, CAUSING THE VEHICLE TO MOVE BACKWARD VERY FAST. I IMMEDIATELY PUT THE CAR IN NEUTRAL, BUT DID NOT STOP AND THEN, IN A FEW SECONDS, TO FORWARD TO AVOID HITTING ANY PERSONS OR VEHICLES IN MY BACK IN THE CHURCH PARKING LOT. IN TOTAL ABOUT 45 FEET BACKWARD AND FORWARD, PERHAPS 30 SECONDS PLUS IN TOTOP. I THEN DID CRASH ON THE WALL OF ST. MARTHA RECTORY. THE CAR WAS UNCONTROLLABLE AND THE FRONT OF MY CAR'S HOOD, FRONT DOORS WERE BADLY DAMAGED, ESPECIALLY THE RIGHT SIDE, WHERE MY SICK WIFE SAT. DAMAGES WITH A PRELIMINARY ESTIMATE OF $ 5864. I HAVE TWO CONCERNS. A) WHOSEN ACCELERATION WHEN CAR IS STARTED AND INABILITY TO STOP IT. B) NO AIR BAG SYSTEM DEPLOYMENT IN SPITE OF THE STRENGTH OF THE IMPACT AND HAVING THE ENTIRE FRONT BUMPER OF THE CAR DESTROYED. 2) I HAVE LOST MY TRUST IN MY PRESENT TOYOTA COROLLA CAR. I HAVE HAD ONE BEFORE AND A CAMRY, AND THEIR PERFORMANCE WAS SATISFACTORY. I WOULD LIKE TO HAVE A VERY CAREFUL INSPECTION OF OUR VEHICLE, ITS CAPACITY FOR SUDDEN UNCONTROLLABLE ACCELERATION, LACK OF AIR BAG PROTECTION, AND THE LIKE. *TR.
Additional Summary:

Toyota ID No:
NHTSA ODI No: 10307652
Date of Incident: 20071024
Vehicle: 2007 LEXUS RX350H

Location of Incident: SANTA MONICA, CA
NHTSA Summary:
TL*THE CONTACT OWNS A 2007 LEXUS RX350H. WHILE DRIVING 3 MPH, THE VEHICLE ACCELERATED WITHOUT WARNING TO APPROXIMATELY 25 MPH. THE VEHICLE CRASHED INTO A WALL AND THE DRIVER SUSTAINED BRUISES TO HER CHEST AND KNEES. AS OF NOVEMBER 1, 2007, THE MANUFACTURER HAD NOT INSPECTED THE VEHICLE. THEY STATED THAT IT COULD TAKE 4-6 WEEKS BEFORE THE VEHICLE COULD BE INSPECTED. THE CONTACT FELT THAT THE ACCELERATOR PEDAL CAUSED THE FAILURE. THE VIN WAS UNKNOWN. THE CURRENT AND FAILURE MILEAGES WERE 1,500.
Additional Summary:

Toyota ID No:
NHTSA ODI No: 10294080
Date of Incident: 20071101
Vehicle: 2006 TOYOTA COROLLA MATRIX
Location of Incident: FACE, FL
NHTSA Summary:
I OWN A 2006 TOYOTA MATRIX. AT ABOUT 60K I BEGAN NOTICING WHEN I PUSHED THE GAS PEDAL FROM A STOP THAT IT SOMETIMES LAGGED, OTHER TIMES THE PEDAL SEEMED VERY TOUCHY AND TO TAKE OFF EXCESSIVELY, CAUSING PASSENGERS TO NOTICE THE SUDDEN ACCELERATION. THIS OCCURS SPONTANEOUSLY BUT AT LEAST ONCE EVERY 14 DAYS. IT IS ALWAYS FROM A STOP SUCH AS AT A LIGHT OR DRIVEWAY. AFTER THE CAR HAS BEEN DRIVEN EVEN A FEW FEET BUT IT HAS NEVER OCCURRED ON THE INITIAL PRESS WHEN THE CAR IS FIRST CRANKED AND MOVED, ONLY AFTER THE WHEELS HAVE MOVED. AS A SIDE NOTE, THE COMPUTER WAS REPLACED AT ABOUT 77K AND THIS DID NOT CORRECT THE ISSUE. I HAVE THE OEM FLOOR MATS WITH THE LATCH SYSTEM THAT HOLDS THE MAT IN PLACE. I HAVE NEVER HAD THE PEDAL APPEAR TO EVEN TOUCH THE MAT. WHILE I HAVE NEVER HAD THE TERRIBLE EXPERIENCE OF HAVING THE PEDAL STICK AND CONTINUE TO ACCELERATE, I AM HOPING THAT THIS INFORMATION WILL HELP THE CAUSE OF THE ISSUES COME TO LIGHT. THERE IS DEFINITELY A PROBLEM WITH THE GAS PEDAL AND THE COMPUTER TELLING THE THROTTLE WHEN AND HOW MUCH TO OPEN. PLEASE DO NOT LET THIS FALL SOLELY ON THE FLOOR MATS. THERE IS MORE TO THE STORY! *TR
Additional Summary:

Toyota ID No:
NHTSA ODI No: 10213627
Date of Incident: 20071114
Vehicle: 2004 TOYOTA CAMRY
Location of Incident: LAWRENCEVILLE, GA
NHTSA Summary:
PULLING INTO A PARKING SLOT, I HIT THE BRAKE BUT IT CAUGHT THE GAS PEDAL CAUSING THE VEHICLE TO ACCELERATE. ONLY THE BALCONY WALL OF THE PARKING STOPPED THE CAR. THE ACCIDENT RESULTED IN THE SPRAIN OF MY NECK AND A $3000 DAMAGE TO THE VEHICLE. *TR
Additional Summary:

Toyota ID No:
NHTSA ODI No: 10209512
Date of Incident: 20071115
Vehicle: 2007 TOYOTA SIENNA
Location of Incident: NORTH BABYLON, NY

NHTSA Summary:
TL*THE CONTACT OWNS A 2007 TOYOTA SIENNA. WHILE DRIVING 10 MPH, THE VEHICLE WOULD SLOW DOWN AND THEN ACCELERATE WITHOUT WARNING WHEN THE BRAKE PEDAL WAS DEPRESSED. THE DEALER WAS UNABLE TO DIAGNOSE THE CAUSE OF THE FAILURE. THE CURRENT AND FAILURE MILEAGES WERE 2,700.
Additional Summary:

Toyota ID No:
NHTSA ODI No: 10214275
Date of Incident: 20071129
Vehicle: 2002 TOYOTA RAV4
Location of Incident: BAKERSFIELD, CA
NHTSA Summary:
TL*THE CONTACT OWNS A 2002 TOYOTA RAV4. WHILE DRIVING 2 MPH IN REVERSE AND WITH THE BRAKE PEDAL DEPRESSED, THE VEHICLE ACCELERATED. THE CONTACT APPLIED MORE PRESSURE TO THE BRAKE PEDAL, BUT THE VEHICLE DID NOT STOP. THE VEHICLE CRASHED INTO A PARKED VEHICLE AND WAS THEN TOWED TO THE DEALER. A POLICE REPORT WAS FILED. THE VEHICLE WAS DESTROYED. THE ROAD CONDITIONS WERE DRY. THE CURRENT AND FAILURE MILEAGES WERE 70,000.
Additional Summary:

Toyota ID No:
NHTSA ODI No: 10211750
Date of Incident: 20071212
Vehicle: 2005 TOYOTA CAMRY
Location of Incident: SAN LEANDRO, CA
NHTSA Summary:
HE HAS BEEN EXPERIENCING PROBLEM EITHER WITH THE TRANSMISSION OR THE ACCELERATOR. WHEN HE START TO ACCELERATE SOMETIMES, USUALLY IN LOW SPEEDS, 20% TO 40% OF THE TIME, THERE IS A FEW SECONDS THE CAR DOES NOT RESPOND, AND SUDDENLY HE FEEL A JOLT AND THE CAR JUMPS VIOLENTLY. HE HAS TO LOOK BACK WHENEVER IT HAPPENS TO SEE IF SOMEONE HAS CRASH IN TO HIS CAR. IF THERE IS A CAR IN FRONT OF HIM WHILE IN TRAFFIC, THIS COULD LEAD POTENTIAL CAR ACCIDENT OF HITTING THE CAR INFRONT OF HIM. HE ALSO HAS TO MAKE SURE HE DOES NOT PARK TOO CLOSE TO OTHER CARS OR THE WALL. I HAVE HELP HIM REPORTED THE ISSUE TO DEALER 2 TIMES MANY MONTHS AGO AND THEY SAID THEY CAN NOT FIX THE PROBLEM IF THEY CAN'T FEEL THE PROBLEM. I HAVE ALSO TOLD THE HEADQUARTER I FOUND NUMEROUS COMPLAINTS ON THE SAME SITUATION/ACCELERATION PROBLEM MY FATHER EXPERIENCING AND I NOTICED TOYOTA HAVE BEEN TELLING OTHER PEOPLE SAME RESPONSE THAT DEALER CAN NOT FIX THE PROBLEM IF DEALER CAN NOT FEEL THE PROBLEM, AND DEALER HAVE BEEN TELLING PEOPLE THIS IS NORMAL BEHAVIOR FOR THOSE WHO REVISITED MANY TIMES. THERE ARE HUNDREDS OF COMPLAINTS ABOUT THIS ISSUE IF YOU GO SEARCH ON GOOGLE USING KEYWARD TOYOTA CAMERY TRANSMISSION PROBLEM). ONE OF THE WEBSITE I I FOUND FROM GOOGLE RESULT FOR EXAMPLE WAS
HTTP://WWW.AUTOBYTEL.COM/CONTENT/RESEARCH/FORUMS/INDEX.CFM/ACTION/POSTN/FID/2052. IT HAS 27 PAGES OF SUCH COMPLAINTS. I HAVE ALSO NOTICE SUCH COMPLAINTS DOES NOT APPLY TO JUST 2005 YEAR CAMERY BUT AGAINST 2002 AND 2007 CAMERY AS WELL, WITH SO MANY CARS THEY SOLD OVER 5 YEARS AND SO MANY COMPLAINTS ON THEIR TRANSMISSION THAT CAN LEAD ACCIDENTS AND POSSIBLY ALREADY DID. TOYOTA ARE MAKING INDIVIDUALS FEEL AS IF THEY ARE THE ONLY ONE IMAGINING THINGS. A FEW PEOPLE SAID CERTAIN STORES ALLOW THEM TO DO A COMPUTER CHIP "FIX" AND THE FIX WAS NOT HELPFUL. ON TOP OF TRANSMISSION

PROBLEM: HE NOTICES PAINT PEELING, RUST PAINT UNDER 15X MAGNIFYING GLASSES, A BUBBLE ON DASH BOARD. *TR
Additional Summary:

Toyota ID No:
NHTSA ODI No: 10227519
Date of Incident: 20071216
Vehicle: 2007 TOYOTA COROLLA
Location of Incident: CONYERS, GA
NHTSA Summary:
2007 TOYOTA COROLLA UNINTENDED ACCELERATION. CONSUMER STATES THAT ENGINE ACCELERATED AT HIGH SPEED, UNABLE TO CONTROL CAR OR BRAKE EFFECTIVELY. *NJ THE CONSUMER STATED SINCE PURCHASING THE VEHICLE, THERE WAS SOME HESITANCY IN STARTING THE VEHICLE DURING SUMMER MONTHS AND JERKY ACCELERATION.*JS
Additional Summary:

Toyota ID No:
NHTSA ODI No: 10215347
Date of Incident: 20071220
Vehicle: 2008 TOYOTA YARIS
Location of Incident: EVANSVILLE, IN
NHTSA Summary:
TL*THE CONTACT OWNS A 2008 TOYOTA YARIS. WHILE DRIVING APPROXIMATELY 20 MPH, THE VEHICLE JERKED AND SURGED DRAMATICALLY WITHOUT WARNING. THE DEALER ADVISED THE CONTACT TO INCREASE HIS SPEED WHILE DRIVING BECAUSE THE VEHICLE CANNOT SUFFICIENTLY OPERATE AT LOW THROTTLE. THE MANUFACTURER PROVIDED NO ASSISTANCE. THE FAILURE MILEAGE WAS 2,000 AND CURRENT MILEAGE WAS 2,025.
Additional Summary:

Toyota ID No:
NHTSA ODI No: 10214653
Date of Incident: 20071222
Vehicle: 2000 TOYOTA CAMRY
Location of Incident: VACAVILLE, CA
NHTSA Summary:
I PURCHASED A PREVIOUSLY OWNED 2000 TOYOTA CAMRY ON 11/4/07. WHILE DRIVING FROM NORTHERN CALIFORNIA TO SOUTHERN CALIFORNIA ON THE LOSS DATE I ACTIVATED THE CRUISE CONTROL FEATURE. TRAFFIC ON THE FREEWAY BEGAN TO SLOW AND I DEPRESSED THE BRAKE PEDAL TO SLOW THE VEHICLE. TRAFFIC BEGAN MOVING AGAIN THEN SUDDENLY STOPPED. I AGAIN DEPRESSED THE BRAKE PEDAL BUT THE CAR SEEMED TO ACCELERATE EVEN THOUGH I HAD BOTH OF MY FEET ON THE BRAKE PEDAL. MY CAR CRASHED INTO THE REAR OF A VEHICLE IN FRONT OF MINE CAUSING BOTH AIR BAGS IN MY VEHICLE TO DEPLOY. THE CRASH IMPACT JAMMED THE DRIVER'S DOOR PREVENTING IT FROM OPENING, TRAPPING ME IN THE CAR WITH SMOKE POURING FROM UNDER THE HOOD. INITIALLY THE ELECTRIC WINDOW WOULD NOT OPEN BUT FINALLY DID, ALLOWING ME TO EXTRICATE MYSELF FROM THE DAMAGED VEHICLE. *TR
Additional Summary:

Toyota ID No:
NHTSA ODI No: 10230959
Date of Incident: 20080115
Vehicle: 2005 TOYOTA SOLARA
Location of Incident: DANA POINT, CA
NHTSA Summary:
2005 TOYOTA SOLARA--ACCELERATOR SURGES. IN JUNE 2008 I TOOK IT TO THE DEALER WHO SAID THEY COULDN'T FIND ANYTHING. THE DEALER HAS THE RECORD OF MY JUNE 2008 REPAIR REQUEST. HOWEVER, THE ACCELERATOR STILL STICKS AND SURGES INTERMITTENTLY. WHAT SHOULD I DO. *TR
Additional Summary:

Toyota ID No:
NHTSA ODI No: 10217071
Date of Incident: 20080117
Vehicle: 2003 LEXUS ES300
Location of Incident: ELLICOTT CITY, MD
NHTSA Summary:
I WAS IN THE DRIVE THROUGH AT THE DUNKIN DONUTS IN GERMANTOWN, MD GIVING MY ORDER IN THE SPEAKER. I REMEMBER HEARING A ROARING SOUND LIKE A TRAIN AND THE NEXT THING I KNOW ALL OF A SUDDEN MY CAR SHOT FORWARD AND HIT THE BACK OF THE CAR AT THE SERVICE WINDOW. IT WAS QUITE STRANGE. I AM CONVINCED I HAD MY FOOT ON THE BRAKE. THE EMS AND POLICE SAID I MUST HAVE HIT THE ACCELERATOR BY MISTAKE. I AM NOT CONVINCED IN MY OWN MIND THAT THIS IN WHAT HAPPENED. *TR
Additional Summary:

Toyota ID No:
NHTSA ODI No: 10215427
Date of Incident: 20080118
Vehicle: 2007 SCION TC
Location of Incident: PEER VILLE, AR
NHTSA Summary:
MY 2007 SCION TC HAS A BRAKE, ACCELERATION PROBLEM...2 TIMES WHILE SITTING IN TRAFFIC WITH THE BRAKES ON. THE CAR HAS SURGED OR LUNGED FORWARD WITH THE ENGINE REVVING LIKE CRAZY. I AM VERY SCARED TO DRIVE IT, NOW! *TR
Additional Summary:

Toyota ID No:
NHTSA ODI No: 10216272
Date of Incident: 20080127
Vehicle: 2007 TOYOTA RAV4
Location of Incident: PLEASANTVILLE, NY
NHTSA Summary:
MY 2007 TOYOTA RAV4 EXPERIENCES SUDDEN AND RANDOM INSTANCES OF UNCONTROLLABLE ACCELERATION WHEN ATTEMPTING TO STOP. UNDER FULL BRAKE PRESSURE THE ENGINE REVS TO 4000 RPM AND CONTINUES TO MOVE. WHEN I SHIFT TO NEUTRAL TO STOP THE VEHICLE, THE ENGINE REVS TO 4500 RPM. SOMETIMES IT WILL RETURN TO NORMAL IDLE AFTER A FEW SECONDS AND SOMETIMES IT IS NECESSARY TO TURN OFF THE IGNITION. IT USUALLY RESTARTS NORMALLY BUT OCCASIONALLY REPEATS THE 4500 RPM. I HAVE TAKEN IT TO THE DEALER TWICE WHO FINDS NO COMPUTER RECORD OF A MALFUNCTION AND REPORTS THAT "EVERYTHING MEETS

FACTORY SPECIFICATIONS. "I HAVE REQUESTED TECHNICAL ASSISTANCE FROM TOYOTA MOTOR SALES BUT THEY ONLY REFER ME BACK TO THE DEALER. *TR
Additional Summary:

Toyota ID No:
NHTSA ODI No: 10216847
Date of Incident: 20080131
Vehicle: 2008 TOYOTA CAMRY
Location of Incident: CAMBRIDGE, OH
NHTSA Summary:
MY WIFE WAS PULLING INTO A PARKING LOT THE CAR ACCELERATED ON ITS OWN OUT OF CONTROL. MY WIFE WAS ABLE TO GET STOPPED WITH OUT ANYTHING BUT SHE IS SO SHOOK UP SHE WONT DRIVE IT ANYMORE. NOTHING HAS BEEN DONE ABOUT FIXING THE PROBLEM IT JUST HAPPENED TODAY. *TR
Additional Summary:

Toyota ID No:
NHTSA ODI No: 10217130
Date of Incident: 20080205
Vehicle: 2003 LEXUS ES300
Location of Incident: EUDNO, CA
NHTSA Summary:
THE 2003 LEXUS ES300 SUDDENLY ACCELERATED WITHOUT WARNING, CAUSING THE VEHICLE TO COME OUT OF A DRIVEWAY, GO COMPLETELY ACROSS THE STREET, UP ONTO THE SIDEWALK, AND HIT POLES/FENCE, CAUSING SEVERE INJURIES. THE GAS PEDAL WAS NOT PRESSED DOWN HARD AT THE TIME, AND THERE WAS NO EXPLANATION FOR THE RAPID ACCELERATION. *TR
Additional Summary:

Toyota ID No:
NHTSA ODI No: 10229437
Date of Incident: 20080206
Vehicle: 2002 TOYOTA CAMRY
Location of Incident: TAMPA, FL
NHTSA Summary:
PRIOR TO THE ACCIDENT ON 2/6/2008 AT 3:55PM THERE WERE 2-3 EPISODES WITHIN A 6 YEAR PERIOD WHEN ANA LOPEZ FELT THE VEHICLE MILDLY ACCELERATE ON ITS OWN FOR ONLY A FEW SECONDS. THE EPISODES WERE SO MILD THAT SHE QUESTIONED HERSELF WHETHER THE CAR TRULY ACCELERATED AND SO SHE NEVER HAD THE CAR INSPECTED. HOWEVER, ON 2/6/2008 AT 3:55PM WHILE DRIVING HOME HEADING SOUTH ON THE VETERANS EXPRESSWAY IN TAMPA SHE EXPERIENCED WHAT SHE DESCRIBES AS THE MOST FRIGHTENING EVENT IN HER LIFE. THE FIRST SIGN THAT SOMETHING WAS GOING WRONG WAS THE DASH LIGHTS BEGAN TO FLICKER ON AND OFF SO SHE MADE AN ATTEMPT TO PULL OVER SO SHE COULD CALL HER HUSBAND AND MAKE HIM AWARE OF HOW THE CAR WAS PERFORMING. AS SHE BEGAN SLOWING DOWN AND VEERING OFF THE ROAD ON THE OUTSIDE LANE, WHICH WAS BYPASSED, THE VEHICLE MADE A VERY POWERFUL ACCELERATION ACCOMPANIED BY A LOUD ACCELERATION SOUND AND LOSS OF STEERING ABILITY AS THE CAR BEGAN TO VEER TO THE LEFT GOING BACK INTO TRAFFIC LANES. SHE FELT AS THOUGH THE VEHICLE WAS NOW CONTROLLING ITSELF AND SHORTLY AFTER BEGAN TO SPIN OUT OF CONTROL. THE VEHICLE STRUCK THE BARRIER WALL AND CAME TO A FINAL REST ON THE RIGHT SOUTHBOUND LANE. ANA LOPEZ SUFFERED MULTIPLE FRACTURES TO HER RIGHT LEG AND SPENT 2 MONTHS

IN THE HOSPITAL AND REHAB UNIT WHERE SHE SUFFERED GREATLY WITH PAIN AND CONTINUES TO SUFFER FROM PAIN AND DEBILITATION. THE VEHICLE WAS INSPECTED BY A PROFESSIONAL INSPECTOR AT HER HOME AND NOTHING WAS FOUND WRONG WITH THE VEHICLE. BUT THE INSPECTION WAS A PRELIMINARY INSPECTION AND SHE FEARED THAT A MORE THOUGH INSPECTION WOULD BE TOO COSTLY FOR HER. HER STORY ABOUT THE INCIDENT HAS NEVER CHANGED AND STILL IS TRAUMATIZING TO HER. THIS COMPLAINT WAS TRANSLATED AND WRITTEN BY ALBERTO LOPEZ, HER SON. *TR
Additional Summary:

Toyota ID No:
NHTSA ODI No: 10219341
Date of Incident: 20080225
Vehicle: 2007 TOYOTA 4-RUNNER
Location of Incident: CALDWELL, TX
NHTSA Summary:
DRIVING A 2007 TOYOTA 4RUNNER SR5 V6 4 WHEEL DRIVE VEHICLE ON A HIGHWAY AT THE SPEED LIMIT OF 70 MPH, IN THE LEFT LANE (4 LANE HIGHWAY). I SLOWED DOWN TO CHANGE LANES ENTERING THE RIGHT LANE. I THINK APPLYING THE BRAKES TO SLOW DOWN AND MOVE OVER. AS I BEGAN TO ACCELERATE AGAIN IN THE RIGHT LANE, I LET UP ON THE ACCELERATOR PEDAL SO AS TO NOT EXCEED THE SPEED LIMIT BUT IT DID NOT COME BACK UP WHEN MY FOOT DID, AND THE VEHICLE DID NOT SLOW DOWN NORMALLY AS IT SHOULD BUT RACED AHEAD. I QUICKLY LOOKED TO SEE IF MY FLOOR MAT HAD CAUSED THE PEDAL TO STICK WHICH I OBSERVED IT DID NOT. I THEN APPLIED THE BRAKES TO TRY TO SLOW THE VEHICLE YET THE VEHICLE WAS STILL ATTEMPTING TO ACCELERATE. FORTUNATELY, I WAS ABLE TO SOMEWHAT SLOW DOWN AND GUIDE THE VEHICLE ONTO AN EXIT RAMP TO MY RIGHT, ALL THE WHILE HOLDING DOWN THE BRAKE AS HARD AS I COULD TO KEEP CONTROL OF THE CAR. I GUIDED IT ONTO THE RIGHT SIDE OF THE RAMP OUT OF THE TRAFFIC PATH AND QUICKLY MOVED THE GEAR FIRST TO NEUTRAL THEN TO PARK. THIS STOPPED THE VEHICLE BUT THE ENGINE CONTINUED TO RAPIDLY REV. I THEN IMMEDIATELY TURNED OFF THE IGNITION. THE WHEELS WERE POINTED STRAIGHT AHEAD, AND I AVOIDED ANY KIND OF CRASH OR INJURY. THEN I TURNED ON MY EMERGENCY LIGHTS. I LET THE VEHICLE SIT OFF FOR A MINUTE OR SO, THEN LEAVING THE VEHICLE IN PARK I TURNED ON THE IGNITION AGAIN UPON WHICH THE ENGINE REVVED AS HIGH AS IT DID NOT MOVE. SO I TURNED OFF THE IGNITION FOR GOOD AND CALLED A NEARBY TOYOTA DEALERSHIP FOR HELP WHO SWIFTLY AND SEAMLESSLY RESPONDED TO MY VEHICLE FAILURE. THE VEHICLE IS PRESENTLY BEING EXAMINED BY THIS DEALERSHIP AND THE CAUSE AND REMEDY ARE YET TO BE DETERMINED. THE DEALERSHIP RESPONDED BY SENDING A TOW TRUCK TO BRING MY VEHICLE TO THE DEALERSHIP AND SAID THEY WOULD CONTACT THE LOCAL POLICE TO LET THEM KNOW SUCH HAD BEEN ARRANGED. *TR
Additional Summary:

Toyota ID No:
NHTSA ODI No: 10232643
Date of Incident: 20080301
Vehicle: 2001 TOYOTA COROLLA
Location of Incident: DURHAM, NC
NHTSA Summary:
I WAS DRIVING ON AN INTERSTATE HIGHWAY WITH MY CRUISE CONTROL ENGAGED AND MY CAR BEGAN TO ACCELERATE BEYOND THE SPEED THAT I HAD SET. I DISENGAGED THE CRUISE CONTROL BUT THAT DID NOT SLOW THE CAR DOWN. NEXT, I TRIED BRAKING, WHICH SLOWED THE CAR DOWN A LITTLE, THOUGH I NEEDED TO USE AN UNUSUALLY LARGE AMOUNT OF FORCE TO PRESS THE BRAKE PEDAL DOWN. ONCE I

RELEASED THE BRAKE, THE CAR BEGAN TO SPEED UP AGAIN. I MADE REPEATED ATTEMPTS TO BRAKE BUT, EVENTUALLY, THE BRAKE PEDAL LOCKED UP. AT THIS POINT, I PUT THE CAR INTO NEUTRAL AND THE ENGINE REVVED (I DON=T KNOW WHAT THE MAXIMUM RPM WAS, BUT I KNOW IT WAS WELL ABOVE NORMAL DRIVING RPM). I PULLED OFF ONTO THE SHOULDER AND TURNED THE CAR OFF. I TRIED TURNING THE IGNITION ON (MY FOOT WAS NOT ON THE ACCELERATOR PEDAL) BUT THE ENGINE REVVED UP SO I IMMEDIATELY TURNED THE CAR OFF. OVER THE NEXT 30 MINUTES, I TRIED TURNING THE CAR ON A FEW MORE TIMES WITH THE SAME RESULT. AFTER I HAD BEEN WAITING FOR 1-1.5 HOURS, A TOW TRUCK ARRIVED. THE DRIVER TURNED THE IGNITION ON AND THE CAR STARTED NORMALLY. SOMEHOW THE PROBLEM HAD RESOLVED ITSELF SO WE WERE UNABLE TO DETERMINE THE CAUSE. *TR
Additional Summary:

Toyota ID No:
NHTSA ODI No: 10219888
Date of Incident: 20080362
Vehicle: 2006 TOYOTA RAV4
Location of Incident: MEDIA, PA
NHTSA Summary:
TL*THE CONTACT OWNS A 2006 TOYOTA RAV4. THE VEHICLE AUTOMATICALLY ACCELERATED. THE CONTACT HAD TO DEPRESS HARD ON THE BRAKES AND/OR SHIFT INTO NEUTRAL IN ORDER TO KEEP THE VEHICLE FROM ENTERING INTO TRAFFIC. THE FAILURE OCCURRED ON MARCH 2, 2008. THE FAILURE MILEAGE WAS 12,125 AND CURRENT MILEAGE WAS 12,135. UPDATED 05/25/08. *LJ
Additional Summary:

Toyota ID No:
NHTSA ODI No: 10209168
Date of Incident: 20060304
Vehicle: 2003 LEXUS ES300
Location of Incident: GREENACRES, FL
NHTSA Summary:
PULLING INTO PARKING SPOT ON LIGHT, ABOUT STOPPED AND THE CAR ACCELERATED VERY FAST FOR ABOUT 30 FEET. BEEBING THE SECOND TIME THIS HAS HAPPENED, I WAS AWARE OF WHERE MY FOOT WAS, ON THE BRAKE, LAST OUT. PULLING INTO PARKING SPOT TO LEFT THE SAME THING HAPPENS. JUST HELP ME. I DON=T THINK I AM SURE IT WAS THE CAR. *TR. THE CONTACT WANTED TO ADD THAT THE DRIVERS FLOOR MAT WAS IN THE TRUNK.
Additional Summary:

Toyota ID No:
NHTSA ODI No: 10222922
Date of Incident: 20080312
Vehicle: 2007 TOYOTA SIENNA
Location of Incident: BROOKLYN, NY
NHTSA Summary:
THIS MEMO WAS SENT VIA EMAIL ON THE TOYOTA WEBSITE OVER A WEEK AGO AND HAVE NOT RECEIVED A RESPONSE FROM THEM. I BELIEVE THE ISSUE IS VERY SERIOUS AND POTENTIALLY LIFE THREATENING. IT IS REGARDS TO A 2007 TOYOTA SIENNA THAT I OWN. *TR. AT LEAST FIVE TIMES IN THE LAST 3 MONTHS I HAVE EXPERIENCED A VERY SERIOUS EPISODE WITH MY SIENNA. WHILE MY FOOT IS DEPRESSING THE BRAKE PEDAL AND AFTER COMING TO A FULL STOP, THE ENGINE WOULD BEGIN TO ACCELERATE VERY

RAPIDLY. I NEED TO PUSH DOWN VERY HARD ON THE BRAKE PEDAL IN ORDER NOT TO LURCH FORWARD. I HAVE BEEN FORTUNATE THAT I HAVE NOT HIT ANYTHING. WHAT SHOULD I DO. BECAUSE THE PROBLEM ONLY SEEMS TO OCCUR RANDOMLY ONCE IN A WHILE, A MECHANIC WOULD NOT SEE ANYTHING WRONG. THANK YOU. JERRY GREENWALD *TR.
Additional Summary:

Toyota ID No:
NHTSA ODI No: 10227586
Date of Incident: 20080217
Vehicle: 2006 TOYOTA RAV4
Location of Incident: MANTUA, OH
NHTSA Summary:
TL*THE CONTACT OWNS A 2006 TOYOTA RAV4. ON MARCH 17, 2008, WHILE COASTING INTO A PARKING SPACE WITH HER FOOT ON THE BRAKE, THE ENGINE REVVED AND THE VEHICLE ACCELERATED AT A HIGH RATE OF SPEED AND CRASHED INTO ANOTHER VEHICLE. THERE WERE NO WARNING SIGNS PRIOR TO THE FAILURE. THE VEHICLE HAD UNDERGONE REGULARLY SCHEDULED MAINTENANCE BEFORE THE CRASH OCCURRED. THE WEATHER WAS DRY ON THE DAY OF THE CRASH. THE VEHICLE WAS RELEASED BACK TO THE CONTACT. HOWEVER, IT HAD TO BE TAKEN BACK TO THE SHOP DUE TO RIDING ROUGHLY WHEN PLACED INTO OVERDRIVE. THE DEALER STATED THAT THE TORQUE CONVERTER WAS LOCKING EVERY TIME THE TRANSMISSION WAS PLACED INTO OVERDRIVE. A POLICE REPORT WAS FILED. THERE WERE NO INJURIES AND THE CONTACT WAS NOT CITED. THE CURRENT MILEAGE IS 17,690 AND FAILURE MILEAGE WAS 17,687. UPDATED 5/13/08 *CN. THE DEALER DETERMINED THERE WAS A PROBLEM WITH THE OVERDRIVE. UPDATED
Additional Summary:

Toyota ID No:
NHTSA ODI No: 10206345
Date of Incident: 20080408
Vehicle: 2007 TOYOTA RAV4
Location of Incident: HAMDEN, CT
NHTSA Summary:
TL* THE CONTACT OWNS A 2007 TOYOTA RAV 4. WHILE ENTERING A PARKING SPACE THE VEHICLE ACCELERATED WITHOUT INTENTION. HE WAS ABLE TO TURN OFF THE ENGINE TO AVOID A CRASH. THE VEHICLE WAS TAKEN TO A DEALER FOR INSPECTION. SINCE THE TECHNICIAN COULD NOT DUPLICATE THE FAILURE, HE COULD NOT PROVIDE A REMEDY. THE FAILURE MILEAGE WAS 5,000. THE CURRENT MILEAGE WAS 25,400. THE VEHICLE IDENTIFICATION NUMBER WAS UNAVAILABLE.
Additional Summary:

Toyota ID No:
NHTSA ODI No: 10291161
Date of Incident: 20080413
Vehicle: 2000 TOYOTA CELICA
Location of Incident: SNOHOMISH, WA
NHTSA Summary:
THREE TIMES IN THE PAST 2 YEARS MY TOYOTA 2000 CELICA'S ACCELERATE STUCK. WHEN I APPLIED THE BRAKES. I AM NOT SURE WHAT CAUSED THE PROBLEM. *TR.
Additional Summary:

Toyota ID No:
NHTSA ODI No:
Date of Incident: 20050419
Vehicle: 2005 TOYOTA CAMRY
Location of Incident: FLINT, MI
NHTSA Summary:
"On April 19, 2005, shortly after 2:00 in the afternoon, Plaintiff's Decedent GUADALUPE ALBERTO was driving the subject 2005 Toyota Camry on Copperas Boulevard in Flint, Genesee County, Michigan, when the vehicle experienced a sudden, unintended acceleration. The vehicle accelerated from an intended speed of less than twenty-five (25) miles per hour to a speed of approximately 80 miles per hour, despite Guadalupe Alberto's having vigorously and desperately applied her brakes, as it traveled at that high speed for approximately one-fourth (1/4) of a mile, collided with a tree, went airborne, and then collided with another tree. Plaintiff's Decedent, despite having been properly secured in her seat belt restraint system, sustained fatal injuries in the accident."
Additional Summary:

Toyota ID No:
NHTSA ODI No: 10205784
Date of Incident: 20080422
Vehicle: 2004 TOYOTA CELICA
Location of Incident: VOLO, IL
NHTSA Summary:
TL*THE CONTACT OWNS A 2004 TOYOTA CELICA. WHILE DRIVING FLOOR-MAT INTERFERENCE CAUSED THE ACCELERATOR PEDAL TO STICK. THE MANUFACTURER WAS NOTIFIED, AND A REPRESENTATIVE ADVISED HER THAT THE DEALER COULD INSTALL A NEW CLIP TO SECURE THE FLOOR-MAT. NO REPAIRS WERE MADE. THE FAILURE MILEAGE WAS UNKNOWN. THE CURRENT MILEAGE WAS 90,000.
Additional Summary:

Toyota ID No:
NHTSA ODI No: 10203543
Date of Incident: 20080426
Vehicle: 2006 TOYOTA SIENNA
Location of Incident: HUDSON, FL
NHTSA Summary:
I OWN A TOYOTA SIENNA 2006 MODEL. WHEN IN TRAFFIC THE CAR SOMETIMES HESITATES WHEN THE ACCELATOR IS PRESSED AND AT OTHER TIMES IT SURGES FORWARD DANGEROUSLY. THEREFORE CONTROLLING THE CAR IS UNPREDICTIBLE. THE EXACT RESPONSE IS ALSO NOTICABLE AT A TRAFFIC LIGHT OR A STOP SIGN. THE FAILURE HAPPENS OFTEN. *TR
Additional Summary:

Toyota ID No:
NHTSA ODI No: 10128281
Date of Incident: 20080501
Vehicle: 2000 TOYOTA CELICA
Location of Incident: STOUGHTON, MA
NHTSA Summary:
ON MAY 3RD, 2008 I HAD AN INCIDENT WITH MY 2000 CELICA GTS. I WAS USING CRUISE CONTROL AT 65MPH. I TAPPED MY BRAKES TO DISENGAGE THE CRUISE CONTROL AS I EXITED ONE HIGHWAY ONTO ANOTHER. WHEN I CLICKED RESUME ON MY CRUISE

CONTROL MY CAR ACCELERATED PAST 65MPH AND CONTINUED CLIMBING. I TAPPED MY BRAKES BUT MY CAR CONTINUED TO ACCELERATE. I TURNED OFF THE CRUISE CONTROL BUT THE CAR CONTINUED TO ACCELERATE PAST 85MPH. I PUSHED MY CLUTCH PEDAL IN AND THE ENGINE REVVED NEAR REDLINE. I RELEASED THE CLUTCH AND TURNED OFF THE ENGINE IN THE MIDDLE OF THE HIGHWAY. TOYOTA TOLD ME THAT THE THROTTLE CABLE HAD BURST AND STUCK OPEN WHEN THE CRUISE CONTROL REQUESTED ACCELERATION. IN TURN MY CLUTCH/TRANSMISSION WERE BLOWN. I BELIEVE THIS FAILURE MODE IS A SERIOUS SAFETY ISSUE, THE CAR CONTINUOUSLY ACCELERATING AND THE ONLY WAY TO REMEDY IS TO TURN THE CAR OFF AT HIGH SPEED ON A HIGHWAY.
Additional Summary:

Toyota ID No:
NHTSA ODI No: 10209968
Date of Incident: 20080505
Vehicle: 2003 TOYOTA CAMRY
Location of Incident: LOS ANGELES, CA
NHTSA Summary:
TL*THE CONTACT OWNS A 2003 TOYOTA CAMRY. WHEN THE CONTACT STARTED THE VEHICLE, SUDDENLY, AN UNINTENDED ACCELERATION OCCURRED WITHOUT APPLICATION TO THE BRAKE AND ACCELERATION PEDALS. THE ENGINE RPMS BEGAN TO INCREASE. THE CONTACT COULD NOT STOP THE VEHICLE WITH APPLYING PRESSURE TO THE BRAKE PEDAL. THE IDENTICAL FAILURE OCCURRED ON A SEPARATE OCCASION WHILE AT A COMPLETE STOP. THE VEHICLE WAS TAKEN TO AN INDEPENDENT MECHANIC. THE VEHICLE HAS NOT BEEN REPAIRED. THE CONTACT HAD CONCERNS OF THE SAFETY RISK INVOLVED. FAILURE MILEAGE WAS UNKNOWN. THE CURRENT MILEAGE WAS 81,000.
Additional Summary:

Toyota ID No:
NHTSA ODI No: 10227047
Date of Incident: 20080505
Vehicle: 2007 TOYOTA COROLLA
Location of Incident: LOS ANGELES, CA
NHTSA Summary:
WHEN I TOOK MY FOOT OFF THE GAS PEDAL THE CAR CONTINUED FORWARD AS THOUGH MY FOOT WAS STILL PEEDING GAS. AS A RESULT I HIT A PARKED CAR NEXT TO THE SLOT I WAS TRYING TO PULL INTO. NO DAMAGE TO THE CAR I HIT BUT $2500 ESTIMATE FOR BODY REPAIR TO THE CAR I WAS DRIVING. I HAVE HAD INFREQUENT SIMILAR EXPERIENCES WITH THIS CAR, BUT ALWAYS IN THE PAST IT HAS BEEN MOMENTARY AND INCONSEQUENTIAL. CAR WILL BE REPAIRED AND IS BEING TAKEN IN TO SERVICE FOR CORRECTION OF THE PROBLEM DESCRIBED ABOVE. *TR.
Additional Summary:

Toyota ID No:
NHTSA ODI No: 10291100
Date of Incident: 20080505
Vehicle: 2005 LEXUS GS430
Location of Incident: TAIWAN, OH
NHTSA Summary:
2005 LEXUS GS430 2008-05-05. IN THE HIGHWAY, THE ENGINE COMPUTER MALFUNCTION, I STEPPED ON BRAKES, BUT THE ACCELERATOR 100% CANNOT SWITCH OFF, HAS THE

DRIVING RECORD MATERIAL TO CONFIRM THAT LEXUS PROVIDES FREEZE MATERIAL, HAS THE ANOTHER GROSS SAME ACCELERATOR IN THE SAME YEAR OUT OF CONTROL, THE DRIVING DEATH. TAIWAN DOES NOT HAVE THE VISIT TO BE WILLING TO CONFIRM THAT IS THE VEHICLES SLIGHT DEFECT BECAUSE TOYOTA IN TAIWAN IS THE RICH COMPANY, DETAILED MATERIAL ON MINE HOMEPAGE: HTTP://LEXUS410.TW. *TR
Additional Summary:

Toyota ID No:
NHTSA ODI No: 10327666
Date of Incident: 20080307
Vehicle: 2006 LEXUS RX330
Location of Incident: HOUSTON, TX
NHTSA Summary:
AS I PUT THE VEHICLE IN REVERSE, IT RAPIDLY AND SUDDENLY ACCELERATED OUT OF CONTROL AND HIT A LIGHT POST. TRYING TO REGAIN CONTROL, I PUT ON THE BRAKE AND SHIFTED TO DRIVE, WHICH IT SUDDENLY AND VERY RAPIDLY SPED FORWARD AND HIT A FENCE BEFORE I COULD STOP THE VEHICLE. WHEN THIS OCCURRED, THE COUPLE I WAS DINING WITH HEARD THE CAR BACKFIRE TWICE WHICH CAUGHT THEIR ATTENTION. I COULD NOT HEAR THE BACKFIRE INSIDE OF THE VEHICLE. THE ACCELERATION WAS EXTREMELY RAPID AND DANGEROUS. THE VEHICLE DID THIS ON ITS OWN. THIS IS NOT A CASE OF WHERE I ACCIDENTALLY HIT THE GAS PEDAL INSTEAD OF THE BRAKE. IN THIS PARTICULAR SITUATION, NO ONE WAS HURT, AND THE VEHICLE ONLY HAS MINOR SCRATCHES. HOWEVER, AS YOU MIGHT IMAGINE, THIS COULD HAVE BEEN A POTENTIALLY DANGEROUS AND DEADLY SITUATION HAD SOMEONE BEEN IN THE PATH OF THE CAR. VEHICLE WAS BROUGHT TO WESTSIDE LEXUS TO CHECK ON 3.13.2008. THEY WERE UNABLE TO IDENTIFY THE PROBLEM AND KEEP THE VEHICLE WAS SAFE TO DRIVE. *TR
Additional Summary:

Toyota ID No:
NHTSA ODI No: 10352871
Date of Incident: 20080521
Vehicle: 2003 LEXUS ES300
Location of Incident: TALLAHASSEE, FL
NHTSA Summary:
2003 LEXUS ES300 WITH UNEXPECTED ACCELERATION. CONSUMER STATES THAT THE VEHICLE WAS IN PARK AND ALL OF A SUDDEN JOLTED FORWARD. SHE STATES NO MATTER HOW HARD THE BRAKE WAS DEPRESSED IT KEPT ACCELERATING UNTIL IT HIT A BRICK COLUMN. *KB *JB
Additional Summary:

Toyota ID No:
NHTSA ODI No: 10323962
Date of Incident: 20080311
Vehicle: 2006 TOYOTA SIENNA
Location of Incident: PASADENA, MD
NHTSA Summary:
WE HAVE A TOYOTA 2006 THAT WILL INCREASE SURGES IN ENGINE SPEED WHEN STOPPED WHICH HAS ALL MOST CAUSED THREE ACCIDENTS ONE GOING INTO A BUILDING, ALSO THE VEHICLE HESITATES WHEN THE ACCELATOR IS PRESSED ON START, WHEN SITTING IN TRAFFIC YOU HAVE TO HOLD YOUR FOOT ON THE BRAKE BECAUSE YOU WILL GET AN ENGINE SURGE WHICH RUNS THE RPMS UP TO 2,000 THEN IT DROPS

OFF. IT IS VERY DANGEROUSLY BECAUSE YOU DON'T KNOW WHEN IT WILL HAPPEN AND CONTROLLING THE VAN IS VERY UNPREDICTABLE.
Additional Summary:

Toyota ID No:
NHTSA ODI No: 10293527
Date of Incident: 20080522
Vehicle: 2006 TOYOTA SCION XB
Location of Incident: SALEM, OR
NHTSA Summary:
I OWN A 2006 SCION XB AND APPROXIMATELY 1 YEAR AGO HAD THE ACCELERATED STICK TO THE FLOOR MAT AFTER ACCELERATING TO PASS ANOTHER VEHICLE. UPON PARKING I TOOK MY FOOT OFF THE ACCELERATOR AND THE CAR CONTINUED TO GAIN SPEED. THE GAS PEDAL GOT STUCK IN THE WINTER FLOOR MAT DEAD. IT REQUIRED ME TO USE MY FOOT AND PULL UP ON THE GAS PEDAL TO RELEASE IT. SINCE THEN I HAVE ALWAYS BEEN CAUTIOUS OF THIS AND HAVE NOT HAD ANOTHER PROBLEM. HOWEVER, AFTER READING ABOUT THE ISSUES WITH TOYOTA AND LEXUS I AM CONCERNED THAT THIS IS ALSO A PROBLEM WITH SCION VEHICLES. FELT I SHOULD REPORT THIS TO SOMEONE. *TR
Additional Summary:

Toyota ID No:
NHTSA ODI No: 10228799
Date of Incident: 20080525
Vehicle: 2007 TOYOTA 4RUNNER
Location of Incident: NASHVILLE, TN
NHTSA Summary:
I WAS WAITING IN LINE OF TRAFFIC TO PICK UP MY DAUGHTER AT SCHOOL. CAR WAS IN DRIVE, MY FOOT WAS FIRMLY ON THE BRAKE PEDAL, WHEN THE ENGINE SUDDENLY RACED AND THE CAR LURCHED FORWARD ABOUT 10 FEET. I STOMPED HARDER ON THE BRAKES AND THE CAR DID STOP, BUT AT NO TIME HAD MY FOOT EVER LEFT THE BRAKE PEDAL, AND WAS NOT EVEN REMOTELY TOUCHING THE GAS. AT FIRST I THOUGHT THE CAR HAD BEEN HIT FROM BEHIND, BUT WHEN THE INCIDENT WAS OVER, I REALIZED THAT WAS NOT THE CASE. MY WIFE OBSERVED THE INCIDENT FROM THE PASSENGER SEAT AND CONCURS THAT MY FOOT WAS ON THE BRAKE THE WHOLE TIME. SHE LATER CHOSEN TO MAKE SURE THAT THE MAT HAD NOT SHIFTED TO PRESS ON THE GAS, BUT CONFIRMED THAT NOTHING WAS IN CONTACT, OR EVEN NEAR THE GAS PEDAL. MY WIFE TOOK THE CAR TO THE DEALER THE SAME DAY TO CHECK THE COMPUTER CODES, BUT NOTHING WAS RECORDED IN THE HISTORY. DEALER WAS UNABLE TO OBSERVE THE PHENOMENON. THE CHECK ENGINE LIGHT DID NOT COME ON. I PURCHASED THE CAR NEW IN OCTOBER 2005. MILEAGE AT THE TIME OF THE INCIDENT WAS 19,912. *TR
Additional Summary:

Toyota ID No:
NHTSA ODI No: 10328316
Date of Incident: 20080523
Vehicle: 2000 TOYOTA CAMRY
Location of Incident: LOS ANGELES, CA
NHTSA Summary:
05-23-2008 AT 3:35PM MY CAR WAS SEVERE DAMAGED B/C OF SA AT NEAR COMPLETED STOP IN THE PARKING SPACE-PARKING LOT OF PO 90027 DURING DAYLIGHT&NORMAL-WEATHER COND.I AM AN ORIGINAL OWNER- 24,000MILES. AAA REPLACED BATTERY 06-

17-08-CIRCUITD/AMPER RECORDED.ALL PARTS ARE ORIGINAL TOYOTA. THE PARKING LOT PO90027 IS NARROW U-TURN.WAS PARKING AT THE ENTRANCE HALFWAY IN THE PARKING SPACE<-2' BEFORE THE PARKING CONCRETE GUARD-HEARD A POP SOUND.CAR FLEW OVER THE PARKING GUARD&SIDEWALK CURB INTO THE BRICK WALL OF PO.HOOD&TIRE&STOPPED 7)AWAY. HEAVY WHITE SMOKE CAME OUT FROM THE HOOD AT THE WINDSHIELD. DEPLOYED AIRBAGS WITH&BRUSH WITH WINDSHIELD CRACKED AT THE AIRBAGS.HEAT TOUCH POINTS-A BURN SKIN ON MY LEFT ARM THROUGH THICK CLOTHING.ENGINE WAS RUNNING FULL OUT KEY GOT OUT FROM CAR B/C INSPECTED EXPOSION.FIRE INSTANTLY IN&TAIL EMPL. CAME OUT TO HELP.CHECKED PO BRICK WALL.ASKED MY NAME&HANDLED THEM MY PARCEL W/PREPAID POSTAGE-NAME/ADDRESS KILLING ATTEMPT WAS TOTAL 1-6/NOT ENOUGH FOR THE FATAL FORCE.MY FOOT WAS PRESSING PARKING PEDAL.ALREADY WUNSBUCKLED SEATBELT-MY RIGHT KNEE HAS ONLY A BUMP-NOT REACTURED. 20LATER MY CAR HALF SITTING ON THE SIDEWALK-SMOKE IS GONE. SML LEAK UNDER HOOD.RADIATOR? STARTED CAR.W/WITNESSES SLOWLY REVERSED IT FROM SIDEWALK.GUARD-CAR WAS CONROLLED FINE DESPITE OF DEPLOYED AIRBAGS-PUSHED WHEELS&WASHER.DROVE BACK HOME/UNDERGROUND GARAGE-1 MILE W/2-4 STOPS. RECALLED THAT A WEEK AGO HAD SA WOUT PRESSING PEDAL.HAPPENED ON SUNSET BLVD.GOV SURPRISED W/HIGH SPEED 50-20 SLOW DOWN. BOTH TIMES THE DISTANCE BEFORE SA WAS 1MILE FROM THE START.TIME--9MIN.THIS IS ENGINE CONTROL MALFUNCTION.05-24-08 AT 4 PM WENT TO HOLLYWOOD TOYOTA-ASKED FOR SERVICE PERSON IN CHARGE.REFERRED TO PATRICK EARLIER.BUYD TOYOTA GEL NOTICE WMY VN.WAS TOLD BY PATRICK TO HAVE THE BODY FIXED FIRST.AFTER THE BODY.OR BRING MY CAR FOR THE ENGINE CHECK SPAGHUELY. ELS HELP TO FULLY INVESTIGATE THIS ACCIDENT.LIVE IN LA W/HEAVY TRAFFIC.THANKS GOD DID NOT KILL ANYBODY.THANK YOU FOR YOUR COOPERATION. *TR
Additional Summary:

Toyota ID No:
NHTSA ODI No: 10287577
Date of Incident: 20080524
Vehicle: 2007 TOYOTA 4RUNNER
Location of Incident: ALPHARETTA, GA
NHTSA Summary:
TL*THE CONTACT OWNS A 2007 TOYOTA 4RUNNER. WHILE DRIVING 60 MPH THE ACCELERATOR PEDAL WAS STUCK TO THE FLOOR WHICH CAUSED THE VEHICLE TO ACCELERATE OVER 120 MPH DURING RUSH HOUR. THE DEALER HAS MADE MULTI ATTEMPTS TO REPAIR THE VEHICLE. THE FIRST THREE ATTEMPTS THE VEHICLE WAS REPAIRED PER THE WARRANTY. THE FOURTH REPAIR IS NOT ELIGIBLE UNDER THE WARRANTY. THE DEALER HAS ATTEMPTED TO DIAGNOSE THE FAILURE FOR ONE WEEK. THE CONTACT HAS TAKEN THE FLOOR MATS OUT OF THE VEHICLE AND THE FAILURE HAS CONTINUED TO OCCUR. THE FAILURE MILEAGE WAS 20,000.
Additional Summary:

Toyota ID No:
NHTSA ODI No: 10280510
Date of Incident: 20080506
Vehicle: 2006 TOYOTA CAMRY
Location of Incident: MINNEAPOLIS, MN
NHTSA Summary:
Additional Summary:

Had a motor vehicle accident on May 30, 2008 in the city of Minneapolis when my 2006 Toyota Camry suddenly surged and took off on me when I was barely pressing the gas pedal in a driveway. I had no time to react and over airbags off a retaining wall km

---

Toyota ID No:
NHTSA ODI No: 10230304
Date of Incident: 20080605
Vehicle: 2003 TOYOTA CAMRY
Location of Incident: PITTSBURG, PA
NHTSA Summary:
TL*THE CONTACT OWNS A 2003 TOYOTA CAMRY. WHILE BACKING INTO A PARKING SPACE, THE VEHICLE SUDDENLY ACCELERATED AND CRASHED THE CONTACT TO CRASH INTO ANOTHER VEHICLE. HE ATTEMPTED TO APPLY THE BRAKES, BUT THE VEHICLE WOULD NOT STOP. A POLICE REPORT WAS FILED. THE VEHICLE WAS TOWED FROM THE SCENE TO A LOCAL REPAIR SHOP AND IS ONLY BEING REPAIRED FOR BODY DAMAGE. THE FAILURE HAS OCCURRED APPROXIMATELY TEN TIMES. THE SPEED WAS UNKNOWN. THE FAILURE AND CURRENT MILEAGES WERE 70,000. UPDATED 07/16/03.*LJ
Additional Summary:

Toyota ID No:
NHTSA ODI No: 10231642
Date of Incident: 20080617
Vehicle: 2005 SCION XB
Location of Incident: SUMMERVILLE, SC
NHTSA Summary:
TL*THE CONTACT OWNS A 2005 TOYOTA SCION XB. WHILE DRIVING 25 MPH, THE CONTACT ATTEMPTED TO ACCELERATE AND THE ACCELERATOR PEDAL STUCK TO THE FLOOR. AS A RESULT, THE CONTACT REAR ENDED ANOTHER VEHICLE. AFTER THE CRASH, THE PEDAL WAS STILL STUCK TO THE FLOOR, EVEN WHEN THE VEHICLE WAS TURNED OFF. THERE WERE NO INJURIES. THE VEHICLE IS CURRENTLY BEING DIAGNOSED BY THE DEALER. THE CURRENT AND FAILURE MILEAGES WERE 30,700.
Additional Summary:

Toyota ID No:
NHTSA ODI No: 10232392
Date of Incident: 20090620
Vehicle: 2006 LEXUS GS300
Location of Incident: CHESTER TOWN, NY
NHTSA Summary:
TL*THE CONTACT OWNS A 2006 LEXUS GS300. WHILE BACKING UP OUT OF A PARKING SPACE, THE CONTACT SHIFTED INTO DRIVE. HE DEPRESSED THE ACCELERATOR PEDAL AND IT EXTENDED TO THE FLOOR AND BECAME STUCK. HE THEN DEPRESSED THE BRAKE PEDAL, HOWEVER, THE VEHICLE CONTINUED TO MOVE BECAUSE THE ACCELERATOR PEDAL WAS STUCK. THE CONTACT CRASHED THROUGH THE FRONT GLASS WINDOW OF A STORE. THE CONTACT AND POSSIBLY ONE OCCUPANT IN THE STORE WERE INJURED. A POLICE REPORT WAS FILED. THE VEHICLE WAS TOWED TO VIRLE'S AUTOMOTIVE SHOP UNTIL IT CAN BE TOWED TO THE REPAIR SHOP. THE VEHICLE HAS NOT BEEN REPAIRED. THE VIN AND SPEED WERE UNKNOWN. THE FAILURE AND CURRENT MILEAGES WERE 30,000.
Additional Summary:

Toyota ID No:
NHTSA ODI No:
Date of Incident: 20040700
Vehicle: 2001 TOYOTA CAMRY
Location of Incident: MONSIC, PA
NHTSA Summary:
Additional Summary: I am an owner of a 2001 Toyota Camry LE. I was an victim of the accelerator sticking in my vehicle. I am writing to tell you of my story.
I bought my car used in 2004. I never had a problem with the car. It ran great from the day I drove it home until I took it.
That one day in July 2004 it happened. I am the mom of 2 beautiful children, my daughter is now 9 1/2 and my son is 8. I was taking my daughter and her friend to Basketball Camp. I had my 2 children and my friend's daughter in the back seat of my car. We pulled into the parking lot of the Taylor Community Center and it happened. As I pulled into the parking spot, my accelerator stuck and the car surged forward and hit a light pole, on hard. There was a woman who witnessed my accident and I was so thankful that someone had actually seen what had just happened. I thought to my self, they are not going to believe me when I tell them what just happened. My entire body was trembling. I was never so scared in my life. It was like I had no control over what the car was doing. I worried about the children because we hit that pole with such force, I was really afraid someone would be hurt. But luckily no one was injured. This witness told police that the one my brake lights come on and the entire front of the car lifted off the pavement and struck the pole. The pole was hit so hard that it swung back & forth causing the light to come smashing down on the roof of my car, crushing it and leaving puncture holes in the metal. I had my car taken to Toyota Scion after the police report was taken and we know no one had been injured. They insisted to me that they could NOT duplicate the problem. I actually argued with them and refused to take my vehicle back until they did duplicate the problem. My car was left there for several days. The problem was NEVER found. I drive with my children in the car everyday. What if next time I couldn't so lucky. This family that was over the embankment is a nightmare to me. Everyday driving my car, afraid of will it happen again. I filed a complaint with the state and my husband contacted the number for Toyota and nothing was ever done. Now, all these other incidents are happening and my car is STILL not being recalled. The woman who witnessed my accident told me I was crazy if I didn't file something. She told me to put her name down, she would tell them exactly what happened. Nothing was ever done and here I am. still driving my car, hoping that I never have to go through that terrible experience again.
My accident was most definitely NOT caused by any mats. There was nothing around my gas pedal. The police officer who took my report asked me if there was anything on the floor that could have caused the accelerator to stick and I assured him that there was not but he could examine the car. He checked my car and nothing was found.
Well, thank you for reading this. I just wanted to tell my story. It is something I will NEVER forget and most definately one of the scariest experiences I have had in my life. I cannot even imagine if I happened on a highway.

Toyota ID No:
NHTSA ODI No: 10294281
Date of Incident: 20080702
Vehicle: 2006 TOYOTA SCION XB
Location of Incident: SEATTLE, WA
NHTSA Summary:
WE WERE DRIVING DOWN A SEATTLE BOULEVARD AT ABOUT 40 MILES AN HOUR ON THE WAY TO THE AIRPORT WHEN I PUT MY FOOT ON THE BRAKE PEDAL TO STOP FOR A RED LIGHT. INSTEAD OF SLOWING, THE ENGINE SPED UP. I MANAGED TO GET THE CAR TO STOP BY STOMPING ON THE BRAKE, BUT AT FULL STOP THE ENGINE STARTED REVVING TOWARD 5000 RPM. THE CAR WAS STRAINING FORWARD, AND THE ONLY WAY TO SOLVE THE PROBLEM WAS TO TURN OFF THE IGNITION ON RESTARTING THE CAR. THE PROBLEM WENT AWAY. I CALLED THE DEALER, WHOSE SERVICE FOLKS SAID THERE WERE NO SERVICE NOTICES ABOUT THE ISSUE, THE NEXT TIME I TOOK THE CAR IN,

THERE WERE NO ERROR CODES IN THE ELECTRONICS. THERE HASNT BEEN A RECURRENCE, BUT THE INCIDENT WAS MORE THAN UNSETTLING. IT WAS DOWNright SCARY. *TR
Additional Summary:

Toyota ID No:
NHTSA ODI No: 10235250
Date of Incident: 20080703
Vehicle: 2005 TOYOTA CAMRY
Location of Incident: BEACH HAVEN, NJ
NHTSA Summary:
TL* THE CONTACT OWNS A 2005 TOYOTA CAMRY. WHILE COASTING AROUND A CORNER AT 5 MPH, THE VEHICLE SUDDENLY BEGAN ACCELERATING ON ITS OWN. THE CONTACT APPLIED THE BRAKES, BUT THE VEHICLE DID NOT RESPOND. THE VEHICLE REAR ENDED THE PRECEDING VEHICLE. THERE WERE NO INJURIES. FIVE DAYS PRIOR TO THE FAILURE, WHILE DRIVING 25 MPH, THE CRUISE CONTROL ENGAGED BY ITSELF. THE VEHICLE WAS NOT BEEN DIAGNOSED BY THE DEALER. THE CURRENT AND FAILURE MILEAGES WERE 10,100.
Additional Summary:

Toyota ID No:
NHTSA ODI No: 10235855
Date of Incident: 20080720
Vehicle: 2005 TOYOTA CAMRY
Location of Incident: ROCKAWAY, NJ
NHTSA Summary:
WHE TURNED INTO OUR DRIVEWAY WHICH SLOPES DOWN (10 - 20 DEGREES) AS SHE HAS BEEN DOING FOR THE LAST 20+ YEARS WITH HER FOOT ON THE BRAKE. THE PAVEMENT WAS DRY. THE BRAKES FAILED TO STOP THE CAR. SHE VERRED LEFT TO AVOID GOING OVER A 20 FOOT EMBANKMENT AT THE END OF OUR DRIVEWAY AND CRASHED INTO A STONE WALL. BASED ON THE ANGLE OF IMPACT THE CAR ROLLED OVER ONTO ITS ROOF. AIR BAGS DID NOT INFLATE. MY WIFE REMAINED SUSPENDED BY THE SEAT BELT UPSIDE DOWN UNTIL EMERGENCY FORCES ARRIVED. SHE SUSTAINED MULTIPLE BRUISES AND CHEST PAINS ATTRIBUTED TO THE SEAT BELT. IF SHE HAD GONE OVER THE EMBANKMENT ONLY GOD KNOWS WHAT THE EXTENT OF HER INJURIES WOULD HAVE BEEN. NEW TIRES HAD BEEN INSTALLED ON THE CAR (FRONT WHEELS ONLY) JUNE 2008 AT WHICH TIME THE FRONT BRAKES WERE ALSO CHECKED FOR WEAR BY AN AUTO MECHANIC. THE CAR WAS "TOTALED" AS A RESULT OF THE ACCIDENT. SUBSEQUENTLY I CHECKED THE BRAKE FLUID IN THE CAR (AFTER THE ACCIDENT). THE BRAKE CYLINDER WAS FULL. FURTHER, THE TOYOTA CAMRY IS EQUIPPED WITH BRAKE WEAR INDICATORS. NO INDICATION (SOUND) OF EXCESS WEAR WAS GIVEN PRIOR TO THE ACCIDENT. MY WIFE IS ADAMANT SHE HAD HER FOOT ON THE BRAKE PEDAL. I SUBMIT TWO THINGS COULD HAVE HAPPENED: 1. THE BRAKES FAILED COMPLETELY AND GRAVITY ACCELERATION DOWN THE DRIVEWAY CONTRIBUTED TO THE CAR'S SPEED AND SUBSEQUENT IMPACT; OR 2. THE CAR SURGED DUE TO A FAILURE OF THE ELECTRONIC THROTTLE CONTROL (ETC) IN WHICH APPLICATION OF THE BRAKES WAS INADEQUATE TO STOP THE CAR. BASED ON PRIOR NHTSA COMPLAINTS/ACTIONS (REF NHTSA ACTION NUMBERS PE04021; DP05002; AND EP06003) AND THE SIMILARITY OF CIRCUMSTANCES, I BELIEVE THE ETC FAILED. I RECOMMEND THE NHTSA AND TOYOTA TAKE ACTION TO REMEDY THIS UNSAFE SITUATION. *TR
Additional Summary:

Toyota ID No:
NHTSA ODI No: 10276769
Date of Incident: 20080804
Vehicle: 2004 LEXUS ES330
Location of Incident: SMYRNA, GA
NHTSA Summary:
THE CAR DOESN'T GO WHEN YOU HIT THE GAS. ALSO WHEN AT LOW SPEEDS IT WILL JUMP LIKE ITS ACCELERATING WITHOUT ME HITTING THE GAS. LEXUS ADMITS THE ISSUE EXISTS AND SAY NOTHING IS WRONG. THEY SAY IT IS A SIDE EFFECT OF THE DRIVE BY WIRE TRANSMISSION. THIS HAS AND WILL CAUSE MORE ACCIDENTS. *TR
Additional Summary:

Toyota ID No:
NHTSA ODI No: 10250799
Date of Incident: 20080802
Vehicle: 2005 TOYOTA 4RUNNER
Location of Incident: ONNARD, CA
NHTSA Summary:
TL* THE CONTACT OWNS A 2005 TOYOTA 4RUNNER. WHILE DRIVING WITH THE CRUISE CONTROL SWITCH ACTIVATED AT 65 MPH SHE APPLIED PRESSURE TO THE BRAKE PEDAL TO DEACTIVATE THE CRUISE CONTROL. THE CRUISE CONTROL WOULD NOT DEACTIVATE. AS A CONSEQUENCE THE VEHICLE CONTINUED TO ACCELERATE PAST THE INTENDED SPEED. UPON FURTHER INSPECTION SHE NOTICED THAT THE ACCELERATOR PEDAL WAS STICKING. SHE NOTICED THAT THERE WAS NOT A FLOOR-MAT INTERFERENCE. THE VEHICLE WAS TAKEN TO THE DEALER, BUT THE TECHNICIANS DID NOT PROVIDE HER WITH ANY ASSISTANCE. NO REPAIRS HAVE BEEN MADE. THE FAILURE MILEAGE WAS 48675.
Additional Summary:

Toyota ID No:
NHTSA ODI No: 10237993
Date of Incident: 20080806
Vehicle: 2003 LEXUS ES330
Location of Incident: ARLETA, CA
NHTSA Summary:
ON AUGUST 6, 2008, I WAS DRIVING HOME, WHEN I WAS MAYBE A FEW MINUTES FROM MY HOUSE, COMING TO A COMPLETE STOP WHEN ATTEMPTING TO MAKE A RIGHT TURN, THE CAR ACCELERATED ON ITS OWN TO ALMOST 5000RPM, WHERE THE STEERING WHEEL LOCKED AND THE BREAKING SYSTEM STOPPED. THE RESULT WAS THAT THE VEHICLE CROSSED OVER FOUR LANES JUMPED A CURB AND ENDED UP CRASHING INTO A NEARBY HOUSE. I SPENT DAYS IN THE HOSPITAL, AND NOW I HAVE A FRACTURED KNEE, BROKEN THUMB, AND MAY CUTS AND BRUISES. THIS WAS THE MOST FRIGHTENING EXPERIENCE OF MY LIFE, AND AFTER DOING SOME RESEARCH, I AM NOT THE ONLY ONE, SOMETHING MUST BE DONE ABOUT THIS, PEOPLE'S LIVES ARE AT RISK!!! *TR
Additional Summary:

Toyota ID No:
NHTSA ODI No: 10294035
Date of Incident: 20080808
Vehicle: 2002 TOYOTA HIGHLANDER
Location of Incident: KEARSARGE, NH
NHTSA Summary:

TL* THE CONTACT OWNS A 2002 TOYOTA HIGHLANDER. WHILE DRIVING 45 MPH THE ACCELERATOR PEDAL BECAME STUCK. HE DOWN-SHIFTED , THEN SHIFTED THE VEHICLE INTO NEUTRAL, AND THEN APPLIED THE BRAKES. HE WAS ABLE TO STOP THE VEHICLE. DURING THE FAILURE, THE FLOOR MAT WAS NOT UNDER THE PEDAL. THE VEHICLE WAS TAKEN TO THE DEALER FOR INSPECTION. THE TECHNICIAN STATED THAT THE THROTTLE WAS OPEN, WHICH COULD AFFECT THE SPEED. HOWEVER THE DEALER COULD NOT DUPLICATE THE PROBLEM OR LOCATE ANY DIAGNOSTIC ERROR CODES. THE FAILURE MILEAGE WAS 82,467.
Additional Summary:

Toyota ID No:
NHTSA ODI No: 10239080
Date of Incident: 20080813
Vehicle: 2003 TOYOTA CAMRY
Location of Incident: SAINT JOHNS, FL
NHTSA Summary:
MY WIFE WAS PULLING INTO OUR DAUGHTER'S DAYCARE TO DROP HER OFF AS SHE DOES EVERY MORNING AND WHILE PULLING INTO THE PARKING SPOT AND WHEN APPLYING THE BRAKE THE VEHICLE SURGED FORWARD AT A HIGH THROTTLE SPEED JUMPED THE CURB AND WENT CRASHING INTO THE BUILDING. EVEN PUMPING THE BRAKES DIDN'T STOP THE CAR. THE ONLY WAY TO GET THE VEHICLE TO STOP GOING FORWARD WAS TO JAM THE GEAR SELECTOR INTO REVERSE AND THEN THE VEHICLE WENT BACKWARDS AT A HIGH RATE OF SPEED (BRAKES STILL DIDN'T WORK) AND THEN HAD TO JAM THE GEAR SELECTOR TO PARK TO STOP THE VEHICLE. UPDATE AS OF TODAY, OUR VEHICLE IS CURRENTLY AT A TOYOTA DEALERSHIP AND SERVICE CENTER AND THE SERVICE MANAGER SAID THERE IS NO PROBLEM WITH THE BRAKES, AND WE ARE SCARED OF THE THOUGHT OF DRIVING THIS VEHICLE AGAIN. IT SEEMS TO BE A ELECTRONIC ISSUE AND CONNECTED TO THE SPEED CONTROL. I HAVE FOUND A MESSAGE BOARD ON THE INTERNET WHERE 97 OTHER SIMILAR INCIDENTS HAVE BEEN REPORTED, AND TOYOTA DOES A RECALL ON THE FLOOR MATS? HMM I SMELL A COVER-UP AND A POSSIBLE CLASS ACTION LAWSUIT. *TR
Additional Summary:

Toyota ID No:
NHTSA ODI No: 10282325
Date of Incident: 20080813
Vehicle: 2003 TOYOTA CAMRY
Location of Incident: SAN DIEGO, CA
NHTSA Summary:
I BACKED OUT OF MY DRIVEWAY, AND WHILE STEPPING ON THE BRAKE PREPARING TO SHIFT TO DRIVE, THE VEHICLE SUDDENLY ACCELERATED AND THE CAR BACKED AT HIGH SPEED INTO MY NEIGHBOR'S DRIVEWAY, AND WHILE ONLY STOP AFTER CRASHING INTO A BRICK WALL. THE CAR WAS TOWED TO A BODY REPAIR COMPANY, AND WAS REPAIRED AT GREAT COST. TOYOTA INSPECTED IT AND FOUND NO DEFECT, SINCE THEN THE CAR HAS STARTED ACCELERATING SEVERAL TIMES, WHEN MY FOOT WAS NOT ON THE GAS PEDAL, BUT I WAS ABLE TO SLOW IT DOWN. *TR
Additional Summary:

Toyota ID No:
NHTSA ODI No: 10239844
Date of Incident: 20080823
Vehicle: 2007 TOYOTA COROLLA

Location of Incident: KIRKLAND, WA
NHTSA Summary:
I WAS DRIVING COMING FROM MY SISTER IN LAWS HOUSE AT GRANDVIEW, WASHINGTON LEAVING AROUND 7:49 AM HEADING HOME TO SEATTLE GOING WEST TO INTERSTATE-82 ON FRIDAY, AUGUST 22, 2008 WITH MY THREE KIDS. I WAS USING MY CRUISE CONTROL AND STAYED ON THE LEFT LANE FOR ABOUT 20 TO 30 MINUTES. WE JUST LEFT YAKIMA CITY AND HEADED TO THE FRED REDMON MEMORIAL BRIDGE AT AROUND 8:30 AM GOING UP HILL, IN WHICH I SAW TWO TRACTOR-TRAILER FAR IN ADVANCE AND BOTH WERE DRIVING ON THE RIGHT LANE. THE LEFT LANE WAS OPEN AS I DROVE INTO THE BRIDGE BUT THEN THE OTHER TRACTOR-TRAILER MADE A CHANGE TO GO TO THE LEFT LANE. I WAS PROBABLY 50 FEET AWAY WHEN THE OTHER TRACTOR-TRAILER MADE THE CHANGE TO THE LEFT LANE. I WAS CRUISING ABOUT 70 TO 80 MPH IN WHICH I HAVE TO PUT MY RIGHT FOOT ON THE BRAKE PEDAL. AT FIRST, I THOUGHT I STEP ON MY GAS PEDAL BECAUSE THE CAR DID NOT SLOWDOWN A BIT. I PRESSED THE BUTTON TO TURN OFF THE CRUISE CONTROL AND HIT THE FOOT BRAKE AGAIN AND AGAIN. I THEN REALIZED THAT MY BRAKES DID NOT WORK. AS I WAS GETTING TOO CLOSED TO THE LEFT LANE TRUCK, I PANICKED AND MADE A CHANGE TO GO TO RIGHT AND REAR-ENDED THE VOLVO TRACTOR-TRAILER. *TR
Additional Summary:

Toyota ID No:
NHTSA ODI No: 10240559
Date of Incident: 20080828
Vehicle: 2006 LEXUS ES330
Location of Incident: CHICAGO, IL
NHTSA Summary:
TL*THE CONTACT OWNS A 2006 LEXUS ES330. WHILE MERGING INTO THE RIGHT LANE AT APPROXIMATELY 25 MPH, THE VEHICLE SUDDENLY ACCELERATED. THE CONTACT WAS UNABLE TO BRAKE AND STRUCK A PEDESTRIAN. THE PEDESTRIAN DIED DUE TO INJURIES. THE CONTACT ALSO REAR ENDED TWO OTHER VEHICLES AND DROVE THROUGH A FENCE. THE VEHICLE CAME TO A STOP WHEN IT CRASHED INTO A GUARD RAIL. THE MANUFACTURER STATED THAT THE CAUSE OF THE FAILURE COULD HAVE BEEN THE FLOORMAT. THE INSURANCE COMPANY CLAIMED THAT THE VEHICLE WAS DESTROYED. THE CONTACT SUSTAINED INJURIES TO HER BACK, NECK, AND LEG. TWO OTHERS WERE ALSO INJURED. STATE POLICE REPORT NUMBER 5271817 WAS FILED. THE FAILURE AND CURRENT MILEAGE WERE 26,286.; "When I started applying my brake, it got faster. It was like possessed...runaway. All I could see is red lights." said Website
Green. Green recalls that horrifying day on August 28, 2008 when she says she thought she was going to die. She says her 2006 Lexus ES 330 vanished atop as she was exiting the ramp on 22nd Street in Chicago. "I plowed through 22nd Street and there were pedestrians...there was a newspaper guy there. I plowed through there and went through fences. I ended up on the guardrail and I just knew I was now with he ma," said Green. Green survived with minor injuries but a pan handler was killed. Green was ticketed for hitting a pedestrian and cited for driving too fast and failure to reduce speed to
avoid an accident. Green says her insurance company Allstate and Toyota suspected the car and found nothing wrong. But a letter from Toyota dated September 10, 2008 stated it is possible that the floor mat was not properly secured and could have interfered with the brake and throttle operation. Green says she knew it was something else and filed reports with the National Highway Traffic Safety Administration."
Additional Summary:

Toyota ID No:
NHTSA ODI No: 10241374
Date of Incident: 20080906
Vehicle: 2003 TOYOTA CAMRY

Location of Incident: ALISO VIEJO, CA
NHTSA Summary:
TL*THE CONTACT OWNS A 2004 TOYOTA CAMRY. WHILE DRIVING 2 MPH, THE VEHICLE SUDDENLY LUNGED FORWARD WHEN THE BRAKE PEDAL WAS DEPRESSED. THE VEHICLE CRASHED INTO THE CURB AND A WALL. THE VEHICLE WAS MODERATELY DAMAGED. THE CONTACT CALLED THE MANUFACTURER AND IS WAITING TO HAVE THE VEHICLE INSPECTED TO DETERMINE THE CAUSE OF THE FAILURE. THE FAILURE AND CURRENT MILEAGE WERE 40,000.
Additional Summary:

Toyota ID No:
NHTSA ODI No: 10230958
Date of Incident: 20080915
Vehicle: 2003 TOYOTA SIENNA
Location of Incident: CHICAGO, IL
NHTSA Summary:
JULY 2008 I WAS DRIVING MY 1995 TOYOTA SIENNA I WAS ON THE RAMP TO ENTER THE HIGHWAY DOING 35MPH WHEN MY CAR SUDDENLY JUMPED TO 75MPH WITHOUT ME TOUCHING THE GAS PEDAL. I STAYED CALM BECAUSE MY KIDS WERE IN THE CAR WITH AND I DIDN'T WANT TO SCARE THEM. THANK GOD I JUMPED IN THE NEXT LANE WHERE WERE NOT TO MANY CARS AND JUST PRESSED THE BRAKE PEDAL HARD THANK GOD THE CAR SLOWED DOWN. I KNEW SOMETHING WAS WRONG WITH THE CAR. I TOOK TO THE MECHANIC HE FOUND NOTHING OUT OF PLACE. IT LATER HAPPENED AGAIN MAYBE TWO WEEKS LATE THE TIME I WAS ON CITY STREETS AND DID THE BASICALLY THE SAME THING AS BEFORE. I RECENTLY SAW REPORTS AND I WAS NOT ALONE AND WAS SOMETHING VERY WRONG WITH THE TOYOTA SYSTEM. PLEASE DO SOMETHING BEFORE ANY MORE PEOPLE GET HURT. *TR
Additional Summary:

Toyota ID No:
NHTSA ODI No: 10242568
Date of Incident: 20080921
Vehicle: 2000 LEXUS RX400H
Location of Incident: ADA, MI
NHTSA Summary:
UNINTENDED VEHICLE ACCELERATION WHILE PARKING, CAUSING VEHICLE TO JUMP A CURB, HIT A TREE AND LAND ON THE HOOD OF A VEHICLE PARKED ACROSS FROM THE SUBJECT PARKING SPACE. *TR
Additional Summary:

Toyota ID No:
NHTSA ODI No: 10244384
Date of Incident: 20081001
Vehicle: 2004 LEXUS IS300
Location of Incident: MADISON, AL
NHTSA Summary:
CAR FAILED TO STOP AT A RED LIGHT UNDER NORMAL BRAKING BECAUSE ENGINE FAILED TO DECELERATE WHEN PRESSURE WAS REMOVED FROM THE PEDAL. MAXIMUM FORCE WAS APPLIED TO THE BRAKE PEDAL. THE BRAKE ANTI LOCK FEATURE WAS ACTIVATED AND A COLLISION WITH THE STOPPED CAR AHEAD WAS BARELY AVERTED. WHEN STOPPED, THE ENGINE RETURNED TO NORMAL IDLE. THE PROBLEM DID NOT RECUR. EXAMINATION BY A MECHANIC AT THE DEALER'S SHOP FAILED TO IDENTIFY A

COMPUTER FAULT OR OTHER CAUSE. THE CAR WAS RETURNED WITHOUT REPAIR. I AM NOT SATISFIED THAT A STUCK THROTTLE IS NOT A REPAIRABLE OR ABNORMAL CONDITION. IT SEEMS TO ME BE HIGHLY DANGEROUS AND MERITS MORE THAN A "WELL, ITS WORKING NOW SO COME BACK WHEN IT HAPPENS AGAIN." SORT OF RESPONSE. *TR
Additional Summary:

Toyota ID No:
NHTSA ODI No: 10230921
Date of Incident: 20091001
Vehicle: 2000 TOYOTA YARIS
Location of Incident: NIAGARA FALLS, NY
NHTSA Summary:
TL* THE CONTACT OWNS A 2000 TOYOTA YARIS. AFTER SHIFTING INTO NEUTRAL GEAR AND EXITING THE CAR WASH, THE VEHICLE ACCELERATED WITHOUT WARNING, AS A CONSEQUENCE HE CRASHED INTO A FENCE. THE FRONT END OF THE VEHICLE AND THE WINDSHIELD WERE DAMAGED. THERE WERE NO INJURIES. HIS LICENSE WAS SUSPENDED, AND HIS INSURANCE INCREASE TWICE THE AMOUNT BECAUSE OF THE CRASH. THE VEHICLE WAS DISPARED. REPORT NUMBER CITDY20084417161 WAS FILED WITH THE MANUFACTURER. AN AUTHORIZED INVESTIGATOR INSPECTED THE FAILURE AND CONCLUDED THAT NOTHING WAS WRONG WITH THE VEHICLE. THE FAILURE MILEAGE WAS 3,500 AND THE CURRENT MILEAGE WAS 6,000. THE VEHICLE IDENTIFICATION NUMBER WAS UNAVAILABLE. UPDATED 11/23/09. *LJ
Additional Summary:

Toyota ID No:
NHTSA ODI No: 10245542
Date of Incident: 20090102
Vehicle: 2000 TOYOTA RAV4
Location of Incident: GURNEE, IL
NHTSA Summary:
WAS GOING THROUGH A DRIVE THROUGH CARWASH, AUTO IN NEUTRAL, REACHED THE END, PUT FOOT ON BRAKE, PUT AUTO INTO DRIVE. THE VEHICLE ACCELERATED ON ITS OWN, GOING STRAIGHT OUT OF THE END OF THE CARWASH. HAD THE BRAKES ON BUT THEY DIDN'T STOP THE VEHICLE. TURNED THE CAR TO MISS A TELEPHONE POLE AND WENT OUT INTO A LANE HWY., CRASHING INTO ANOTHER VEHICLE, STOPPING MY VEHICLE FINALLY. VEHICLE WOULD NOT STOP AT ALL. THE VEHICLE WAS TOWED TO OUR INS. CO. REPAIR ESTIMATE SHOP. DO NOT HAVE A CAUSE FOR THE PROBLEM AS YET, STILL UNDER INVESTIGATION. *TR
Additional Summary:

Toyota ID No:
NHTSA ODI No: 10230892
Date of Incident: 20081015
Vehicle: 2002 TOYOTA SIENNA
Location of Incident: CHERRY HILL, NJ
NHTSA Summary:
WHILE APPROACHING A STOP SIGN INTERSECTION, CAR ACCELERATED AND CRASHED INTO ANOTHER. *TR
Additional Summary:

Toyota ID No:
NHTSA ODI No: 10239802
Date of Incident: 20081017
Vehicle: 2003 TOYOTA CAMRY
Location of Incident: RICHMOND (HENRICO), VA
NHTSA Summary:
SUDDEN ACCELERATION WITHOUT WARNING: 2003 TOYOTA CAMRY XLE. FOUR INCIDENTS TO DATE: WHILE DRIVING CAR IT BEGAN TO ACCELERATE RAPIDLY WITHOUT WARNING. TAKING FOOT OFF ACCELERATOR AND PUTTING ONTO BRAKE DID NOT GET THE CAR SLOWED DOWN. HAD TO CUT OFF IGNITION AT THE KEY SWITCH. THE ONLY THING IN COMMON WAS THAT EACH TIME THIS OCCURRED IT HAD BEEN EITHER DAMP, MISTY, RAINING OR RAINING HARD. THIS IS NOT AN ACCELERATOR PEDAL FLOOR MAT PROBLEM, IT IS A THROTTLE PROBLEM! OUR FLOOR MAT WAS LOCKED DOWN AND DID NOT GET NEAR THE ACCELERATOR PEDAL BUT WE REMOVED THE FLOOR MAT ANYWAY. INCIDENTS AS FOLLOWS: 24 JULY 2008 - TRAVELING TO ROANOKE VA SOUTH ON I-81, FEMALE OWNER DRIVING. CRUISE CONTROL ON. DAYTIME. RAINING GENTLY. CAR MADE A ROARING SOUND (LIKE REVVING THE MOTOR WHILE IN NEUTRAL) AND SUDDENLY INCREASED SPEED RAPIDLY. WE GOT THE CAR STOPPED WITHOUT AN ACCIDENT. 28 AUG 2008- TRAVELING TO ROANOKE VA SOUTH ON I-81. FEMALE OWNER DRIVING. CRUISE CONTROL ON. NIGHT. RAINING VERY HARD. CAR SUDDENLY MADE THE ROARING SOUND AND THE CAR ACCELERATED RAPIDLY. WE GOT THE CAR STOPPED WITHOUT AN ACCIDENT. 17 OCT 2008 -ON A CITY STREET IN LYNCHBURG VA. MALE OWNER DRIVING. CRUISE CONTROL OFF. DAYTIME. HAD BEEN RAINING HARD ALL DAY. DRIVING SLOWLY IN HEAVY TRAFFIC. CAR MADE ROARING SOUND AND ACCELERATED RAPIDLY. CAR HIT VEHICLE IN FRONT OF IT. NO SERIOUS DAMAGE. 14 OCT 2009- TRAVELING ON CITY STREET IN HENRICO VA. MALE OWNER DRIVING. CRUISE CONTROL OFF. SLOWING DOWN TO MAKE A LEFT TURN. MORNING AND JUST STARTING A MISTY RAIN. CAR MADE ROARING SOUND AND CAR ACCELERATED RAPIDLY. NO ACCIDENT. MCKEHOE TOYOTA, BROAD ST., HENRICO/RICHMOND VA HAS MADE EVERY EFFORT THEY KNOW TO TRY TO FIND OUT WHAT CAUSED THESE INCIDENTS WITHOUT RESULTS. THEY KEPT THE CAR AND DROVE IT IN GOOD AND RAINY WEATHER AND DID NOT DUPLICATE THE PROBLEM. THEY CALLED THE ENGINEERS IN CALIFORNIA WHO DON'T HAVE ANSWERS. *TR
Additional Summary:

Toyota ID No:
NHTSA ODI No: 10239074
Date of Incident: 20081017
Vehicle: 2003 TOYOTA CAMRY
Location of Incident: RICHMOND (HENRICO), VA
NHTSA Summary:
THIS MORNING I FILED A SAFETY COMPLAINT ABOUT MY 2003 TOYOTA CAMRY XLE DUE TO THE SUDDEN ACCELERATION WITHOUT WARNING PROBLEM. AT THAT TIME I GAVE INCORRECT FAILURE MILEAGE AS 50,000 MILES. WHEN I CHECKED MY RECORDS OF MILEAGE AT GAS FILL UPS I FOUND THE FOLLOWING: 24 JULY 2008: MILEAGE AT TIME OF INCIDENT WAS BETWEEN 58926 AND 58444. 28 AUG 2008: MILEAGE WAS BETWEEN 59090 AND 59462. 17 OCT 2008: MILEAGE WAS BETWEEN 60237 AND 60548. MILEAGE AT TIME OF ACCIDENT WAS APPROXIMATELY 60109. 14 OCT 2009: MILEAGE WAS BETWEEN 64205 AND 64532. THAT IS AS CLOSE AS I CAN PIN DOWN THE FAILURE MILEAGE. I USED THE 20170968 DATE FOR APPROX. INCIDENT DATE BECAUSE THAT WAS THE ONE TIME THAT OUR CAR HIT THE VEHICLE IN FRONT OF US. THE OTHER THREE TIMES WE DID NOT HAVE AN ACCIDENT. I TRUST YOU CAN PUT THIS INFORMATION WITH THE REPORT I FILED THIS MORNING. NOTE: MY E-MAIL ADDRESS MAY CHANGE WITHIN THE NEXT WEEK OR

SO AS I AM PLANNING ON BOOKING UP TO HIGH SPEED INTERNET ACCESS. THANK YOU FOR YOUR ATTENTION TO THIS MATTER. *TR. CHARLES & ALGINA AMBWORTH
Additional Summary:

Toyota ID No:
NHTSA ODI No: 10260450
Date of Incident: 20081017
Vehicle: 2004 TOYOTA CAMRY
Location of Incident: PLEASANT PRAIRIE, WI
NHTSA Summary:
TL*THE CONTACT OWNS A 2004 TOYOTA CAMRY. WHILE DRIVING APPROXIMATELY 35 MPH, THE CONTACT DEPRESSED THE ACCELERATOR PEDAL LIGHTLY AND THE VEHICLE ACCELERATED ABNORMALLY. THREE MONTHS LATER, THE FAILURE RECURRED AND THE CONTACT CRASHED INTO ANOTHER VEHICLE. THE VEHICLE SUSTAINED MODERATE DAMAGE, BUT THERE WERE NO INJURIES. A POLICE REPORT WAS FILED. THE DEALER STATED THAT THE SENSOR ON THE ACCELERATOR PEDAL WAS THE CAUSE OF THE FAILURE. THE SENSOR WAS REPLACED. THE MANUFACTURER OFFERED A VERBAL APOLOGY, BUT NO FURTHER ASSISTANCE WAS PROVIDED. THE FAILURE MILEAGE WAS 54,000 AND CURRENT MILEAGE WAS 61,000.
Additional Summary:

Toyota ID No:
NHTSA ODI No: 10293586
Date of Incident: 20081111
Vehicle: 2001 TOYOTA CAMRY
Location of Incident: QUEENSBURY, NY
NHTSA Summary:
TL * THE CONTACT OWNS A 2004 TOYOTA CAMRY. WHILE MAKING A RIGHT TURN THE VEHICLE ACCELERATED AND CRASHED INTO A VEHICLE. HE WAS FORCED TO TURN THE ENGINE OFF TO STOP VEHICLE FROM ACCELERATING. HE WAS TREATED AT AN EMERGENCY ROOM FOR INJURIES TO THE FACE, HEAD, AND AROUND THE CHEST/SHOULDER AREA. THE VEHICLE WAS SEVERELY DAMAGED. THE CURRENT MILEAGE WAS UNKNOWN. THE FAILURE MILEAGE WAS 49,684.
Additional Summary:

Toyota ID No:
NHTSA ODI No: 10256898
Date of Incident: 20041119
Vehicle: 2004 TOYOTA COROLLA
Location of Incident: SARASOTA, FL
NHTSA Summary:
2004 TOYOTA COROLLA ACCELERATED WHILE THE DRIVER STILL HAD HIS FOOT ON THE BRAKE. *NJ THE CONSUMER STATED THE VEHICLE ACCELERATED BACKWARDS AT A SPEED OF 100 MPH. THE VEHICLE WAS TOTALED.*JB
Additional Summary:

Toyota ID No:
NHTSA ODI No: 10219647
Date of Incident: 20081119
Vehicle: 2007 TOYOTA HIGHLANDER
Location of Incident: RESTON, VA

NHTSA Summary:
TL*THE CONTACT OWNS A 2007 TOYOTA HIGHLANDER. WHILE DRIVING 5 MPH, THE VEHICLE SUDDENLY ACCELERATED, STRUCK A CURB, CROSSED THE MEDIAN, AND CRASHED INTO THREE PARKED VEHICLES. THERE WERE NO INJURIES. THE AIR BAGS FAILED TO DEPLOY. THE FRONT PASSENGER SIDE BUMPER AND DRIVERS SIDE OF THE VEHICLE WERE DAMAGED. THE MANUFACTURER STATED THAT THEY WOULD INSPECT THE VEHICLE WITHIN 30 DAYS. THE INSURANCE COMPANY WAS NOTIFIED. THE FAILURE OCCURRED WITHOUT WARNING. THE FAILURE MILEAGE WAS 29,000.
Additional Summary:

Toyota ID No:
NHTSA ODI No: 10295243
Date of Incident: 20081119
Vehicle: 2005 SCION XB
Location of Incident: NEWINGTON, CT
NHTSA Summary:
THE TOYOTA SCION XB HAS THE SAME ACCELERATOR PROBLEM. I PUT IN A FLOOR MAT ON TOP OF THE BRILED FLOOR MAT AND IT HAS GOTTEN STUCK 3 OR 3 TIMES ON THE ACCELERATOR, LUCKILY I WAS ABLE TO DEPRESS THE BRAKE STRONG ENOUGH TO GET INTO PARK AND STOP THE VEHICLE. THE WORSE CASE I DROVE OVER THE ISLAND IN MY PARKING LOT. I HAVE SINCE REMOVED THE EXTRA FLOOR MAT AND HAVE NOT HAD A PROBLEM WITH THIS ISSUE SINCE. I KNOW IT'S LATE NOTICE BUT I JUST FOUND OUT ABOUT THIS SITE. *TR.
Additional Summary:

Toyota ID No:
NHTSA ODI No: 10288530
Date of Incident: 20081124
Vehicle: 2006 TOYOTA RAV4
Location of Incident: DOVER , DE
NHTSA Summary:
LOST BRAKING POWER AND THERE WAS A CRUNCHING SOUND, HAD BOTH FEET ON BREAKING PEDAL & TRUCK WOULDNOT STOP. IT WAS STILL ACCELERATING AND ABSANTE ABSD LIGHT CAME ON. *TR
Additional Summary:

Toyota ID No:
NHTSA ODI No: 10250962
Date of Incident: 20081203
Vehicle: 2002 TOYOTA CAMRY
Location of Incident: SANFORD, NC
NHTSA Summary:
AFTER BACKING OUT OF A PARKING SPACE AND SWITCHING THE CAR FROM REVERSE TO DRIVE, THE CAR ACCELERATED QUICKLY FORWARD CRASHING INTO TWO PARKED CARS AND FINALLY STOPPING AFTER HITTING A CONCRETE STRUCTURE. APPLYING THE BRAKE WOULD NOT STOP THE CAR. THE CAR HAS BEEN DECLARED A TOTAL LOSS BY THE INSURANCE COMPANY. UNEXPLAINED ACCELERATION EVENTS HAVE OCCURRED BEFORE WITH THIS CAR. *TR
Additional Summary:

Toyota ID No:

NHTSA ODI No: 10255972
Date of Incident: 20081210
Vehicle: 2007 TOYOTA SIENNA
Location of Incident: JEFFERSON, OR
NHTSA Summary:
TL*THE CONTACT OWNS A 2007 TOYOTA SIENNA. WHEN PLACING THE VEHICLE INTO DRIVE, THE CONTACT EXPERIENCED UNCONTROLLED ACCELERATION. THE VEHICLE ACCELERATED FORWARD AND CRASHED INTO A CONCRETE WALL. THERE WERE NO WARNING INDICATORS PRIOR TO THE FAILURE. THE CONTACT SUFFERED HER KNEES AND A POLICE REPORT WAS FILED. THE VEHICLE WAS INSPECTED BY AN INSURANCE ADJUSTER, BUT IT COULD NOT BE DETERMINED WHY THE VEHICLE FAILED. THE CONTACT CALLED THE MANUFACTURER AND WAS INFORMED THAT THERE WERE NO INJECTS WITH THE VEHICLE. THEREFORE, NO COMPENSATION WOULD BE MADE. THE VEHICLE WAS DESTROYED. THE FAILURE MILEAGE WAS 70,000. UPDATED 3/3/09 *CN UPDATED 04/12/09 *JB
Additional Summary:

Toyota ID No:
NHTSA ODI No: 10265900
Date of Incident: 20081219
Vehicle: 2000 TOYOTA ECHO
Location of Incident: LA VISTA, NE
NHTSA Summary:
WHILE ATTEMPTING TO STOP VEHICLE USING FULL BRAKE PEDAL FORCE AND HAND BRAKE THE VEHICLE CONTINUED TO ACCELERATE. I WAS UNABLE TO STOP THE CAR AND NEARLY CAUSED AN ACCIDENT. AFTER SHIFTING THE TRANSMISSION INTO PARK THE ENGINE CONTINUED OPERATING AT HIGH SPEED. THE GAS PEDAL WAS NOT STUCK OR USED AT ANY TIME DURING THIS TIME. THIS OCCURRED ON TWO SEPARATE OCCASIONS BOTH AT HIGHWAY AND CITY SPEEDS. IT SEEMS THAT THERE ARE OTHER REPORTS OF SIMILAR INCIDENTS WITH THIS CAR. NO PROBLEMS WERE IDENTIFIED BY MECHANIC WHO COULDN'T REPRODUCE THE PROBLEM. *TR
Additional Summary:

Toyota ID No:
NHTSA ODI No:
Date of Incident: 20070800
Vehicle: 2000 TOYOTA CAMRY
Location of Incident: KANSAS CITY, MO
NHTSA Summary:
Additional Summary: I've had a different problem with the throttle. I had a 2005 Camry V6. While using cruise control at expressway speed with a warm engine (running for at least an hour), if traction was lost, engine would start going wild - racing or trying to stall. Loss of traction usually due to a bump or change in pavement, but also happened when fighting a head wind. Most Toyota service managers I talked to were clueless, one felt that it was an anti-rev feature malfunctioning that he had experienced driving a new (less than 1,000 miles) truck. My Toyota certified mechanic felt that it was throttle related. Problem could not be predicted or reversed. No idiot lights came on or codes. Everything fine if car allowed to cool for 45 minutes to an hour. I wrote to Toyota's head man about this and have a copy of my letter plus his response. Traded the car a year ago for a Toyota hybrid.

Toyota ID No:
NHTSA ODI No: 10261936
Date of Incident: 20090101

Vehicle: 2004 LEXUS ES330
Location of Incident: PHILADELPHIA, PA
NHTSA Summary:
PLEASE NOTE - THIS IS OR MAY BE RELATED TO OTHER ODI I JUST REPORTED AT 10261932. I HAVE A LEXUS 2004 ES330 AND IN ADDITION TO WEIRD BRAKING PROBLEMS, I HAVE ALSO HIT THE BRAKE AND BASICALLY FEEL THE CAR CONTINUE LIKE I NEVER HIT THE BRAKE AND I AM ACCELERATING OR HAVE CRUISE CONTROL ON. WHEN THIS HAS OCCURRED, I DID NOT SEE THE ABS BRAKING SYSTEM ENGAGE OR ANY TYPE OF SLOWING DOWN OCCUR. I END UP HITTING AND RELEASING THE BRAKE QUICKLY TO TRY AND GET THE CAR TO BRAKE AND COME TO A STOP. ON ONE OCCASION I ALSO QUICKLY HIT THE GAS TO SEE IF PERHAPS THAT WOULD CLEAR THE PROBLEM, AND IT DID NOT. I PULLED OVER, CHECKED THAT NO DEBRIS OR FLOOR RUG HAD SOME HOW MADE THE GAS PEDAL STICK, AND THAT IS NOT THE PROBLEM. OTHER THAN THIS PROBLEM, AND THE PROBLEMS REPORTED UNDER ODI 10261931, I HAVE NOT HAD ANY OTHER PROBLEMS W/ ACCELERATING OR STOPPING. I HAVE BROUGHT THE ISSUE TO THE ATTENTION OF LEXUS AND THEY HAVE DENIED ANY RECALLS OR OTHER REPORTED PROBLEMS. I SUSPECT THEY ASSUME I AM A WOMAN - WHO CANNOT DRIVE. AGAIN, I HAVE OWNED FAST HIGH PERFORMANCE PORSHE AND MERCEDES PREVIOUSLY AND NEVER HAD THIS PROBLEM BEFORE. I HOPE SOMEONE WILL INSPECT THIS OUT BEFORE I AM INJURED OR PERHAPS SOMEONE ELSE IS. THANKS. PS NO DATE OF INCIDENT, SO I WILL PUT 1/1/09. THIS REFUSAL OF THE CAR TO ENGAGE THE BRAKE ESC HAS OCCURRED ABOUT 7 TIMES. *TR
Additional Summary:

Toyota ID No:
NHTSA ODI No: 10296981
Date of Incident: 20090121
Vehicle: 2001 TOYOTA HIGHLANDER
Location of Incident: LA MESA, CA
NHTSA Summary:
TL* THE CONTACT OWNS A 2001 TOYOTA HIGHLANDER. WHILE DRIVING 10 MPH THE VEHICLE BEGAN TO RAPIDLY ACCELERATE. AFTER REPEATED BRAKE APPLICATION THE VEHICLE WOULD NOT STOP. CONSEQUENTLY SHE CRASHED INTO A SIGN. THE VEHICLE WAS TAKEN TO THE DEALER, AND THEY INSTALLED A SECONDARY HOOK TO THE FLOOR-MAT. ALSO SHE WAS ADVISED THAT IN APRIL 2010 THEY WOULD INSTALL A NEWLY DESIGNED ACCELERATOR PEDAL. THE FAILURE MILEAGE WAS 169,794.
Additional Summary:

Toyota ID No:
NHTSA ODI No: 10286530
Date of Incident: 20090205
Vehicle: 2002 TOYOTA CAMRY
Location of Incident: KERRVILLE, TX
NHTSA Summary:
TL*THE CONTACT OWNS A 2002 TOYOTA CAMRY. WHILE DRIVING 5 MPH INTO A DRIVEWAY HER VEHICLE CRASHED INTO A BRICK RETAINER WALL. THE VEHICLE WAS TOWED TO A LOCAL MECHANIC WHO QUOTED A REPAIR COST OF $2000 TO REPAIR THE DAMAGE TO THE FRONT FENDER. THE MECHANIC STATED THAT HE CONFIRMED THAT THERE WAS NO MECHANICAL DAMAGE DONE TO THE VEHICLE. THE AIR BAGS DID NOT DEPLOY AND NO ONE WAS INJURED. WHILE PARKING THE VEHICLE IT UNEXPECTEDLY ACCELERATED AND CRASHED INTO A BEAUTY SALON. THE POLICE WAS NOTIFIED AND A REPORT IS AVAILABLE. THE POLICE OFFICER STATED THAT THE CONTACT LOST CONSCIOUSNESS PRIOR TO THE CRASH. THE CONTACT STATED SHE WAS IN COMPLETE

CONTROL OF THE VEHICLE WHEN IT ACCELERATED ON ITS OWN ON BOTH OCCASIONS. THE DEALER STATED THAT THERE WERE NO PROBLEMS WITH THE VEHICLE WHEN IT WAS SOLD TO HER. THE MANUFACTURER STATED THAT THEY WOULD CONDUCT A SURVEY OF THE DAMAGES AND CHECK FOR A MECHANICAL FAILURE. THE CONTACT WAS NOT NOTIFIED BY THE DEALER IF A REPRESENTATIVE HAS ASSESSED THE DAMAGES. THE FAILURE MILEAGE WAS 55,000.
Additional Summary:

Toyota ID No:
NHTSA ODI No: 10291126
Date of Incident: 20090210
Vehicle: 2004 LEXUS RX330
Location of Incident: FAIRVIEW, NJ
NHTSA Summary:
I OWN A RX 330 LEXUS AND IT HAS A PROBLEM WITH THE ACCELERATOR. SOMETIMES IT GETS STUCK AT ABOUT 3 RPMS AND IT WONT COME DOWN FROM THERE UNTIL SOMETHING LETS GO OF IT AND THEN IT JERKS EVEN THOUGH I WOULD BE GOING AT A LOW SPEED SUCH 35MPH. THE ACCELERATOR FEELS RIGID AND NO MATTER HOW MUCH YOU PUSH ON IT THE SPEED DOESNT INCREASE UNTIL IT JERKS AND LETS GO. OTHER TIMES IT TENDS TO GO FASTER EVEN THOUGH I AM NOT PRESSING ON IT, WHEN I BRAKE IT DOESNT WANT TO STOP UNTIL I SLAM ON THE BRAKES HARD. I CAN FEEL THAT IT IS LIKE SOMETHING IS STUCK, AND THE CAR DOES WHAT IT WANTS UNTIL IT IS LET GO WHICH IS WHEN IT JERKS. I HAVE NOT HAD A CRASH YET, BUT I AM CONCERNED ABOUT IT. *TR
Additional Summary:

Toyota ID No:
NHTSA ODI No: 10267717
Date of Incident: 20090114
Vehicle: 2002 TOYOTA CAMRY
Location of Incident: KERRVILLE, TX
NHTSA Summary:
TL*THE CONTACT OWNS A 2002 TOYOTA CAMRY. WHILE DRIVING APPROXIMATELY 15 MPH, THE VEHICLE ACCELERATED WITHOUT WARNING. AS A RESULT, THE CONTACT CRASHED THE VEHICLE INTO A WALL. THE VEHICLE WAS MODERATELY DAMAGED. ONE WEEK LATER, THE FAILURE RECURRED AND THE VEHICLE CRASHED INTO A BUILDING. THE VEHICLE WAS COMPLETELY DESTROYED AND NONE OF THE AIR BAGS DEPLOYED. THE CONTACT WAS NOT INJURED IN EITHER CRASH. A COMPLAINT WAS FILED WITH THE MANUFACTURER AND A REPRESENTATIVE CONCLUDED AFTER INSPECTION OF THE VEHICLE THAT NOTHING CAUSED THE SPONTANEOUS ACCELERATION. A POLICE REPORT WAS FILED. THE FAILURE MILEAGE WAS 50,000 AND CUR RENT MILEAGE WAS 60,000.
Additional Summary:

Toyota ID No:
NHTSA ODI No: 10291176
Date of Incident: 20090224
Vehicle: 2005 TOYOTA CAMRY
Location of Incident: FINDLAY, OH
NHTSA Summary:
HAVE A 2005 TOYOTA CAMRY. THE ENGINE HAS STARTED ACCELERATING THREE TIMES. THE LAST BEING 2/4/09. EACH TIME THE BRAKES WERE ABLE TO KEEP THE CAR FROM SPEEDING UP AND, AFTER A FEW SECONDS, THE ENGINE WENT BACK TO AN IDLE. TWO

TIMES I TOOK THE CAR TO THE DEALER (AND TALKED OTHER TIMES) AND THEY CHECKED IT OUT. THEY COULD NOT FIND ANY PROBLEM AND AFTER CONFERING WITH THEIR "HEADQUARTERS" IN CALIFORNIA, SAID THAT THEY HAD NEVER HEARD OF ANYONE HAVING THIS PROBLEM. AFTER READING THE FIRST ARTICLE IN A NEWSPAPER ABOUT THIS CONCERN I CHECKED THE FLOOR MAT. THE FLOOR MAT IS NOT EVEN CLOSE TO THE ACCELERATOR PEDDLE.
Additional Summary:

Toyota ID No:
NHTSA ODI No: 10290777
Date of Incident: 20090213
Vehicle: 2001 TOYOTA RAV4
Location of Incident: YUKON, OK
NHTSA Summary:
2001 TOYOTA RAV 4 THE ACCELERATOR SUDDENLY BECAME STUCK FULL OPEN AT A SLOW SPEED. WAS ABLE TO BRING CAR TO STOP BY RIDING BRAKES AND TURNED ENGINE OFF. HAPPENED ONE TIME. CAR SEEMED FINE AFTER RESTARTING. NOTHING WAS DONE TO CORRECT BECAUSE NEVER COULD FIGURE OUT CAUSE AND HAS NEVER REPEATED. *TR
Additional Summary:

Toyota ID No:
NHTSA ODI No: 10291976
Date of Incident: 20090220
Vehicle: 2006 TOYOTA CAMRY
Location of Incident: GLASTONBURY, CT
NHTSA Summary:
TL*THE CONTACT OWNS A 2006 TOYOTA CAMRY. WHILE DRIVING IN REVERSE INTO A PARKING SPACE, THE VEHICLE ACCELERATED WITHOUT INTENTION AND CRASHED INTO A HOUSE. THE DRIVER SUSTAINED MINOR INJURIES ON HER HAND. THERE WERE DAMAGES TO THE REAR BUMPER, EXTERIOR LIGHTS AND FRAME STRUCTURE. THE VEHICLE WAS TAKEN TO AN INDEPENDENT MECHANIC FOR REPAIRS. THE FAILURE MILEAGE WAS UNKNOWN. THE CURRENT MILEAGE WAS 56,000.
Additional Summary:

Toyota ID No:
NHTSA ODI No: 10276805
Date of Incident: 20090227
Vehicle: 2006 TOYOTA CAMRY
Location of Incident: CHICAGO, IL
NHTSA Summary:
2006 TOYOTA CAMRY SURGED UNEXPECTEDLY. INCREASE IN ENGINE SPEED OCCURRING WHILE THE ACCELERATOR PEDAL IS NOT DEPRESSED. UNCONTROLLED SURGE CAUSED VEHICLE TO CRASH INTO OTHER OBJECTS. UPON IMPACT, AIR BAGS DID NOT INFLATE. *TR
Additional Summary:

Toyota ID No:
NHTSA ODI No: 10260633
Date of Incident: 20090302
Vehicle: 2004 TOYOTA SEQUOIA

Location of Incident: PRESCOTT, AZ
NHTSA Summary:
VEHICLE LOSES CONTROL OF ACCELERATION WHEN TURNING AND CAUSES OTHER VEHICLES TO NEARLY CRASH INTO MY VEHICLE. THE VSC (VEHICLE SKID CONTROL) SYSTEM ACTIVATES IN ERROR DURING NORMAL DRIVING ON DRY PAVEMENT DUE TO FAULTY SYSTEM (THEY DO KNOW PROBLEM WITH TOYOTA SENSORS). SENSORY PROBLEM RELAYED TO TRS, THE VEHICLE SKID CONTROL SYSTEM DOES NOT DISENGAGE WHILE IN SNOW AND IT GETS STUCK. *TR
Additional Summary:

Toyota ID No:
NHTSA ODI No: 10296767
Date of Incident: 20090107
Vehicle: 2000 TOYOTA RAV4
Location of Incident: CHAMPAIGN, IL
NHTSA Summary:
I OWN A 2000 TOYOTA RAV 4 WHICH I PURCHASED NEW. ON SEVERAL OCCASIONS I HAVE HAD THE ACCELERATOR PEDAL BECOME STUCK FULLY OPEN WHEN ACCELERATING TO MERGE ONTO AN INTERSTATE HIGHWAY. I WAS TOLD SEVERAL MONTHS AGO THAT AN AFTERMARKET FLOOR MAT WAS SLIPPING FORWARD AND TRAPPING THE PEDAL. RECENTLY WHEN THIS EVENT HAPPENED I STOPPED AND LOOKED AT THE MAT MYSELF. IT WAS AT LEAST 4 TO 6 INCHES FROM CONTACTING THE ACCELERATOR PEDAL OR ANY PART OF THE DRIVE BY WIRE SWITCH. I FEEL LIKE THE DEALERSHIP IS JUST TRYING TO GET AROUND ACTUALLY INVESTIGATING MY COMPLAINT. THIS HAS HAPPENED ON SEVERAL OCCASIONS OVER THE LAST 4 TO 5 MONTHS. I FINALLY DECIDED TO FILE THIS COMPLAINT AFTER IT HAPPENED TO ME THIS MORNING (12/22/2009). *TR
Additional Summary:

Toyota ID No:
NHTSA ODI No: 10292586
Date of Incident: 20090114
Vehicle: 2000 TOYOTA CAMRY
Location of Incident: SAN ANTONIO, TX
NHTSA Summary:
TL* THE CONTACT OWNS A 2000 TOYOTA CAMRY. WHILE DRIVING 15 MPH THE VEHICLE SUDDENLY BEGAN TO ACCELERATE WITHOUT INTENTION. AFTER ONE MINUTE OF REPEATED BRAKE APPLICATION, THE VEHICLE STOPPED. THE VEHICLE HAS NOT BEEN INSPECTED TO DETERMINE THE CAUSE OF THE FAILURE. THE CURRENT AND FAILURE MILEAGES WERE 52000.
Additional Summary:

Toyota ID No:
NHTSA ODI No: 10289229
Date of Incident: 20090216
Vehicle: 2006 TOYOTA HIGHLANDER
Location of Incident: DEPOE BAY, OR
NHTSA Summary:
TODAY, ANOTHER LEXUS/TOYOTA HAS AN ACCELERATION PROBLEM WHICH FINALLY CAUSED 3 DEATHS. MANY OF US HAVE HAD SIMILAR EXPERIENCES. YOU HAVE 3 AT LEAST ALREADY LISTED IN YOUR COMPLAINTS. 2006 TOYOTA HIGHLANDER (3) JUST TOOK OFF AND DRIVERS COULDN'T STOP THEM (I AM ONE) UNTIL THE CAR HIT SOMETHING. LEXUS TOO, MADE BY TOYOTA. PLEASE CHECK INTO THIS. I WROTE

TOYOTA TO EXPLAIN THAT I DID NOT PUT MY FOOT ON ACCELERATOR. I GOT A GENERIC LETTER BACK, WITHOUT HELP OR EXPLANATION. WE HAVE A PROBLEM WITH THESE CARS. SOMEONE NEEDS TO ADDRESS THESE UNEXPLAINED ACCELERATIONS. MY CAR FLEW THROUGH THE AIR WITH ME SCREAMING. TRYING TO STOP IT. I HIT DRADIN INTO A CEMENT SIDE OF AN IRRIGATION DITCH. PASSENGER IS STILL IN REHAB SINCE MARCH OF THIS YEAR. IS IT JUST THE MATS, AS THE SAN DIEGO PRESS IS SUGGESTING WITH THE DEATH OF THE CHP AND HIS FAMILY MEMBERS?? THINK NOT. SOMETHING IN ONE OF THE SYSTEMS, CODES, CRUISE CONTROL, COMPUTER OR ??? PLEASE CHECK THESE OUT. TOYOTA HAS KEPT QUIET LONG ENOUGH. FARMERS INSURANCE IS CODING MY ACCIDENT AS MY FAULT, YET I HAVE NEVER HAD AN ACCIDENT AND DID NOT CAUSE THIS ONE. *TR
Additional Summary:

Toyota ID No:
NHTSA ODI No: 10292738
Date of Incident: 20090117
Vehicle: 2003 LEXUS IS300
Location of Incident: REDONDO BEACH, CA
NHTSA Summary:
WAS SLOWLY PULLING INTO PARKING SPACE WHEN CAR SUDDENLY ACCELERATED FULL THROTTLE. CAR WAS CARRIED OVER PARKING BUMPER INTO BUSINESS BEYOND, WITH DAMAGES TO BODY AND UNDERCARRIAGE OVER SIX THOUSAND DOLLARS. *TR
Additional Summary:

Toyota ID No:
NHTSA ODI No: 10291129
Date of Incident: 20090219
Vehicle: 2004 TOYOTA CAMRY
Location of Incident: RAVENSVILLE, NJ
NHTSA Summary:
TL*THE CONTACT OWNS A 2004 TOYOTA CAMRY. WHILE APPROACHING A PARKING SPACE, THE VEHICLE ACCELERATED WITHOUT INTENTION. CONSEQUENTLY THE VEHICLE CRASHED INTO A WALL. THE ACCELERATOR PEDAL WAS STUCK, SO THE ENGINE CONTINUED TO REV. THE BUMPER AND THE FRONT-END OF VEHICLE WAS DAMAGED. THE WARRANTY COMPANY TOWED THE VEHICLE TO THE DEALER FOR INSPECTION. THE TECHNICIAN CONCLUDED THAT THE FLOOR-MATS CAUSED THE FAILURE. HE THEN ADDED THAT THIS WAS A COMMON FAILURE WITH HIS MODEL TYPE, HOWEVER, HE SPECULATED THAT THE TECHNICIAN INCORRECTLY DIAGNOSED THE VEHICLE, BECAUSE THE FLOOR-MATS WERE VERY FAR AWAY FROM THE ACCELERATOR PEDAL. THE VEHICLE WAS THEN TOWED TO HIS MECHANIC, AND REPAIRED AT AN EXPENSE OF $1200.00. THE FAILURE MILEAGE WAS 55000. THE CURRENT MILEAGE WAS UNKNOWN.
Additional Summary:

Toyota ID No:
NHTSA ODI No: 10293962
Date of Incident: 20090322
Vehicle: 2003 TOYOTA CAMRY
Location of Incident: BROAD RUN, VA
NHTSA Summary:
TL* THE CONTACT OWNS A 2003 TOYOTA CAMRY. WHILE ATTEMPTING TO TURN AT 40 MPH THE VEHICLE BEGAN TO ACCELERATE WITHOUT INTENTION. AFTER REPEATED

BRAKE APPLICATION HE WAS ABLE TO STOP THE VEHICLE. SHORTLY AFTERWARDS WHILE REVERSING OUT OF A PARKING SPACE, THE VEHICLE ACCELERATED. HE WAS ABLE TO STOP THE VEHICLE BY USING THE SAME METHOD. HE WAS IN PROCESS OF TAKING THE VEHICLE TO THE DEALER FOR INSPECTION. THE CURRENT MILEAGE WAS APPROXIMATELY 80,000. THE FAILURE MILEAGE WAS APPROXIMATELY 79,000.
Additional Summary:

Toyota ID No:
NHTSA ODI No: 10265389
Date of Incident: 20090409
Vehicle: 2005 TOYOTA SIENNA
Location of Incident: PORT CHARLOTTE, FL
NHTSA Summary:
TL*THE CONTACT OWNS A 2005 TOYOTA SIENNA. WHILE DRIVING BETWEEN 3-5 MPH, ANOTHER VEHICLE RAN A STOP SIGN AND STRUCK THE DRIVER'S SIDE OF THE CONTACT'S VEHICLE. HER VEHICLE HIT-TAILED AND TURNED TO THE LEFT. THE VEHICLE ACCELERATED AND STRUCK ANOTHER VEHICLE. THE CONTACT HAD NO CONTROL OVER THE VEHICLE. SHE ATTEMPTED TO PLACE THE VEHICLE INTO PARK, BUT WAS UNSUCCESSFUL. THE ENGINE REVVED AND THE VEHICLE ACCELERATED AGAIN. THE VEHICLE STRUCK A CURB, A BOULDER, AND THEN A PALM TREE BEFORE COMING TO A COMPLETE STOP. THE BRAKES FAILED TO OPERATE DURING THE INCIDENT. A POLICE REPORT WAS FILED AND THERE WERE NO INJURIES. THE VEHICLE WAS TOWED TO A GMC DEALER AND THEY TEST DROVE THE VEHICLE, BUT WERE UNABLE TO DUPLICATE THE FAILURE. THE VEHICLE IS STILL AT THE GMC DEALER AND WILL BE APPRAISED. THE FAILURE AND CURRENT MILEAGES WERE 40,000.
Additional Summary:

Toyota ID No:
NHTSA ODI No: 10190711
Date of Incident: 20090415
Vehicle: 2001 TOYOTA TACOMA
Location of Incident: REDONDO BEACH, CA
NHTSA Summary:
2005 TOYOTA TACOMA--ACCELERATED WHEN BRAKING, HIGH RPMS, WHEN APPLYING THE BRAKE. *TR
Additional Summary:

Toyota ID No:
NHTSA ODI No: 10266632
Date of Incident: 20090418
Vehicle: 2009 TOYOTA SIENNA
Location of Incident: MOUNT DORA, FL
NHTSA Summary:
ON AN EARLY SATURDAY APRIL 18, 2009 TRIP TO THE AIRPORT THE CRUISE CONTROL STUCK WHILE ACCELERATING AND WOULD NOT DISENGAGE BY PRESSING THE BRAKE PEDAL OR BY PULLING THE CRUISE CONTROL LEVER (LOCATED ON THE STEERING COLUMN) TOWARDS THE DRIVER. I HAD JUST GONE THROUGH AN AUTOMATIC TOLLGATE IN THE FAR LEFT LANE AND BEGAN ACCELERATING (AND PROBABLY HIT THE RESUME) FEATURE OF THE CRUISE CONTROL LEVER IN ORDER TO GET IMMEDIATELY OVER TO THE FAR RIGHT LANE TO EXIT. WITHIN SECONDS I WAS UP TO AN ADEQUATE SPEED AND TOUCHED THE BRAKE. THE CAR CONTINUED ACCELERATING. I PRESSED THE BRAKE MORE FIRMLY AND PULLED THE CRUISE CONTROL LEVER TOWARDS ME.

NEITHER ACTION DISENGAGED THE CRUISE CONTROL. I WAS ABLE TO AVOID TRAFFIC AND POINT THE CAR TOWARDS THE RIGHT SHOULDER. I THEN PUSHED THE GEAR SHIFT INTO NEUTRAL AND THE CAR ENGINE SLOWED DOWN. THE CAR STOPPED ACCELERATING AND THE CRUISE CONTROL DISENGAGED. ON MY RETURN TRIP I TRIED TO DUPLICATE THE ACTIONS WHICH PRECEDED THE PROBLEM BUT WAS NOT SUCCESSFUL. (I HAVE DRIVEN THE CAR ABOUT 5000 MILES AND THIS WAS THE FIRST TIME THIS PROBLEM HAS OCCURRED.) THE SAME DAY I TOOK THE CAR TO A LARGE TOYOTA DEALER. THEY DROVE THE CAR SEVERAL MILES AND DID NOT HAVE THE PROBLEM OCCUR. SO THEY WERE NOT ABLE TO FIND A PROBLEM. THEY SAID THEY COULD ONLY FIX A PROBLEM IF THEY COULD EXPERIENCE IT. AND, THEY SUGGESTED I TAKE THE CAR TO THE TOYOTA DEALER THAT SOLD IT TO ME. LATER THE SAME DAY I DID RETURN THE CAR TO THE TOYOTA DEALER THAT SOLD IT TO ME. THEY WERE GOOD LISTENERS AND KEPT THE CAR FOR SEVERAL DAYS OF DRIVING, DIAGNOSTICS, AND PHONE CALLS TO TOYOTA. BUT, IN THE END THEY TOO, COULD NOT LOCATE A PROBLEM AND RETURNED THE CAR TO ME UNCHANGED. MY CONFIDENCE IN THIS VEHICLE IS GREATLY DIMINISHED. WHILE I WAS SUCCESSFUL IN DISENGAGING THE ACCELERATING CRUISE CONTROL BY PUTTING THE CAR INTO NEUTRAL I DO NOT WANT TO HAVE TO DEPEND ON THAT ESPECIALLY IN A HEAVY TRAFFIC SITUATION. *TR
Additional Summary:

Toyota ID No:
NHTSA ODI No: 10294514
Date of Incident: 20090428
Vehicle: 2008 TOYOTA COROLLA
Location of Incident: BRANDON, FL
NHTSA Summary:
TL*THE CONTACT OWNS A 2008 TOYOTA COROLLA. WHILE DRIVING 5 MPH OUT OF A PARKING LOT THERE WAS A LOUD POPPING SOUND AND THE VEHICLE BEGAN TO ACCELERATE INTO ON COMING TRAFFIC. THE VEHICLE STOPPED AFTER IT CRASHED INTO A PARKED VEHICLE. THE CONTACT SUFFERED A BACK INJURY DURING THE CRASH BUT WAS NOT TRANSPORTED TO THE HOSPITAL. THE VEHICLE WAS NOT DESTROYED AND HAS BEEN REPAIRED. THE CONTACT DOES NOT KNOW WHY THE VEHICLE ACCELERATED. THE CURRENT MILEAGE WAS 19,700 AND THE FAILURE MILEAGE WAS 19,100.
Additional Summary:

Toyota ID No:
NHTSA ODI No: 10296908
Date of Incident: 20090429
Vehicle: 2005 LEXUS ES330
Location of Incident: WOODRIDGE, IL
NHTSA Summary:
I OWNED A 2005 LEXUS ES330 THAT WAS INVOLVED IN A CRASH. ON 02/09/9 THE DRIVER OF THE VEHICLE WAS PULLING INTO A PARKING SPOT WHEN THE CAR ACCELERATED AFTER HER FOOT WAS OFF ACCELERATOR CAUSING THE VEHICLE TO CRASH THROUGH A STOREFRONT WALL AND WINDOWS, CAUSING EXTENSIVE DAMAGE TO BUILDING AND TOTALING THE VEHICLE. THE POLICE DID NOT BELIEVE THAT THERE WAS AN ACCELERATION PROBLEM NOR DID I, UNTIL HEARING THIS RECENT REPORT ON THE NEWS. *TR
Additional Summary:

Toyota ID No:

NHTSA ODI No: 10296379
Date of Incident: 20090508
Vehicle: 2004 TOYOTA TACOMA
Location of Incident: KIRSTON, TN
NHTSA Summary:
TL*THE CONTACT HAS A 2004 TOYOTA TACOMA. THE VEHICLE WAS PRE-OWNED AND PURCHASED IN APRIL 2009. WHILE DRIVING BETWEEN 25 AND 35 MPH, THE VEHICLE BEGAN ACCELERATING WITHOUT PLACING PRESSURE ON THE GAS PEDAL. THE FAILURE HAS OCCURRED ON FIVE OCCASIONS. THE FAILURE IS RELATED TO THE VEHICLE SPEED CONTROL. THE FAILURE MILEAGE WAS 68,000 AND THE CURRENT MILEAGE AND MOST RECENT FAILURE OCCURRED AT 74,000 MILES.
Additional Summary:

Toyota ID No:
NHTSA ODI No: 10286068
Date of Incident: 20090512
Vehicle: 2004 TOYOTA 4RUNNER
Location of Incident: EUREKA, CA
NHTSA Summary:
I HAVE A 2004 TOYOTA 4RUNNER AND A FEW MONTHS AGO THE ACCELERATOR PEDAL GOT STUCK UNDER THE RUBBER FLOOR MAT. I PURCHASED THE RUBBER FLOOR MAT FROM A TOYOTA DEALER AND IT WAS MADE SPECIFICALLY FOR THE 4 RUNNER. WHEN THE PEDAL GOT STUCK, THE ENGINE WAS RUNNING WIDE OPEN. I MANAGED TO GET THE VEHICLE IN NEUTRAL AND STOPPED BEFORE HITTING ANYTHING. IT WAS VERY FRIGHTENING. IT APPEARS LIKE THE MAT SLID FORWARD AND THAT WAS WHAT CAUSED THE PEDAL TO GET STUCK. I HAD RECENTLY CLEANED THE MAT AND MAY NOT HAVE HAD IT POSITIONED PROPERLY WHEN I REINSTALLED IT. I THINK THE DESIGN OF THE MAT IS NOT SAFE DUE TO THE THICKNESS OF THE MAT AT THE FRONT NEAR THE PEDAL. FUTURE INCIDENTS ARE LIKELY IF THE MAT IS LOOSE AND SLIDES FORWARD. I DID HAVE A CARPETED MAT UNDER THE RUBBER MAT. THE CARPETED MAT CAME WITH THE 4RUNNER WHEN I BOUGHT THE VEHICLE. THIS LIKELY CONTRIBUTED TO THE RUBBER MAT COMING LOOSE AND SLIDING FORWARD. IF NOT INSTALLED PROPERLY, IT APPEARS LIKE THE CARPETED MAT COULD ALSO SLIDE FORWARD AND MAY CAUSE THE ACCELERATOR TO GET STUCK. *TR
Additional Summary:

Toyota ID No:
NHTSA ODI No: 10291376
Date of Incident: 20090518
Vehicle: 2006 TOYOTA 4RUNNER
Location of Incident: BROOKLYN, NY
NHTSA Summary:
HIGHWAY MERGE RAMP AT ALMOST FULL THROTTLE TWICE, ONCE PASSING ANOTHER VEHICLE ON HIGHWAY AT ALSO HIGH THROTTLE USAGE. ACCELERATOR PEDAL WAS STUCK OPEN VEHICLE CONTINUED TO ACCELERATE FELT LIKE CRUISE CONTROL WAS ENGAGED BUT WASN'T. I ATTEPED ON BRAKES BUT THAT DIDN'T HELP, I THEN HIT THE ACCELERATOR PEDAL WITH MY RIGHT FOOT AND THE PEDAL WENT BACK TO NORMAL. *TR
Additional Summary:

Toyota ID No:
NHTSA ODI No: 10269466

Date of Incident: 20090514
Vehicle: 2005 TOYOTA SEQUOIA
Location of Incident: IMPERIAL, PA
NHTSA Summary:
2005 TOYOTA SEQUOIA VACTRAC DISENGAGED LOST CONTROL / ACCELERATOR/BRAKES TOOK AUTO TO REPAIR DEALER. COULD NOT FIND PROBLEM. *TR
Additional Summary:

Toyota ID No:
NHTSA ODI No: 10309040
Date of Incident: 20090515
Vehicle: 2005 TOYOTA COROLLA
Location of Incident: NORWOOD, MA
NHTSA Summary:
TL*THE CONTACT OWNS A 2005 TOYOTA COROLLA. WHEN THE CONTACT SLIGHTLY DEPRESSED THE ACCELERATOR PEDAL AT 1 MPH, THE VEHICLE SURGED FORWARD AND CRASHED INTO ANOTHER VEHICLE. THERE WERE NO INJURIES. HE IS IN THE PROCESS OF HAVING THE VEHICLE INSPECTED TO DETERMINE THE CAUSE OF THE FAILURE. THE FAILURE AND CURRENT MILEAGES WERE 13,452.
Additional Summary:

Toyota ID No:
NHTSA ODI No: 10269885
Date of Incident: 20090523
Vehicle: 2004 TOYOTA CAMRY
Location of Incident: SUFFERN, NY
NHTSA Summary:
2004 CAMRY VIN: EXPERIENCED UNINTENDED ACCELERATION (SURGING) AFTER APPLYING BRAKE TO COME TO FULL STOP. I EXAMINED THE POSITION OF MY FEET AFTER STOPPING, AND TURNING OFF IGNITION TO CANCEL SURGING. LEFT FOOT WAS ON FOOTREST IN DRIVER FOOTWELL. RIGHT FOOT WAS ON BRAKE. THIS IS THE SECOND INSTANCE OF UNINTENDED ACCELERATION IN APPROXIMATELY THREE MONTHS. MILEAGE WAS 45940. NO PARTS HAVE BEEN REPLACED YET. I WILL CONTACT A DEALER TO DETERMINE IF THERE IS A RECALL. PREVIOUS EXPERIENCE WITH INTERMITTENT PROBLEMS HAVE LED TO "NO DIAGNOSIS" BY DEALERSHIPS. *TR
Additional Summary:

Toyota ID No:
NHTSA ODI No: 10272579
Date of Incident: 20090526
Vehicle: 2002 LEXUS RX300
Location of Incident: CRESTWOOD, KY
NHTSA Summary:
TL*THE CONTACT OWNS A 2002 LEXUS RX300. WHEN THE CONTACT ATTEMPTED TO START THE VEHICLE, SHE NOTICED THAT THE ENGINE ATTEMPTED TO START TWICE BEFORE THE KEY WAS TURNED ALL THE WAY ON THE IGNITION. SHE PROCEEDED TO SHIFT THE VEHICLE INTO PARK INTO DRIVE. THE VEHICLE ACCELERATED QUICKLY AND WOULD NOT STOP, EVEN WHEN THE BRAKES WERE APPLIED. THE VEHICLE CRASHED THROUGH THE GARAGE DOOR AND, APPROXIMATELY TEN FEET FURTHER, STRUCK A RETAINING WALL, HER NEIGHBOR'S HOME, AND A GAS METER. THE CONTACT PLACED THE VEHICLE INTO REVERSE AND IT SPED BACK THROUGH HER RETAINING

WALL AND STRUCK HER HOME. THE AIR BAGS DID NOT DEPLOY AND THERE WERE NO INJURIES. A POLICE REPORT WAS FILED AND THE VEHICLE WAS DESTROYED. THE DEALER STATED THAT THEY HAD NEVER HEARD OF THIS TYPE OF FAILURE. SHE ATTEMPTED TO NOTIFY THE MANUFACTURER, BUT WAS UNABLE TO REACH ANYONE. THE CURRENT AND FAILURE MILEAGES WERE 63,212.
Additional Summary:

Toyota ID No:
NHTSA ODI No: 10293097
Date of Incident: 20090317
Vehicle: 2003 TOYOTA COROLLA
Location of Incident: VIRGINIA BEACH, VA
NHTSA Summary:
TL* THE CONTACT HAS A 2003 TOYOTA COROLLA. AFTER PROCEEDING FROM A STOP LIGHT AT 35 MPH, THE VEHICLE ACCELERATED TO 70 MPH. EVEN AFTER BRAKE APPLICATION, THE VEHICLE CONTINUED TO ACCELERATE. SHE THEN SHIFTED THE VEHICLE INTO PARK AND TURNED THE ENGINE OFF. THE VEHICLE WAS TOWED TO HER HOME. A MECHANIC INSPECTED THE VEHICLE, BUT COULD NOT IDENTIFY THE CAUSE OF THE FAILURE. THE MANUFACTURER WAS NOTIFIED, AND SHE WAS ADVISED THAT HER MODEL TYPE DOES NOT HAVE A DEFECT. THE FAILURE MILEAGE WAS 100,880. THE VEHICLE IDENTIFICATION NUMBER WAS UNAVAILABLE.
Additional Summary:

Toyota ID No:
NHTSA ODI No:
Date of Incident: 20090528
Vehicle: 2006 TOYOTA HIGHLANDER
Location of Incident: -
NHTSA Summary:
On May 28, 2009, Aaron Bailey was driving her 2006 Toyota Highlander on Alvarado Blvd, Fremont, CA with three passengers, when the car began suddenly accelerating and traveling too fast, she applied the brakes, but the vehicle wouldn't stop or slow down, there were no brakes, she attempted to move the steering wheel back and forth in an attempt to slow the vehicle down, it continued and crash a tree, killing one pregnant passenger and severly injuring another passenger. The Fremont Police Report No is 09035012.
Additional Summary:

Toyota ID No:
NHTSA ODI No: 10272562
Date of Incident: 20090529
Vehicle: 2008 TOYOTA CAMRY
Location of Incident: SAN JOSE, CA
NHTSA Summary:
TL* THE CONTACT OWNS A 2008 TOYOTA CAMRY. WHILE BACKING OUT OF A PARKING SPACE AT AN UNKNOWN SPEED, THE VEHICLE ACCELERATED ON ITS OWN WITHOUT WARNING. THE VEHICLE STRUCK A LAMP POST AND WAS TOWED TO AN AUTO LOT. THIS WAS THE FIRST TIME THIS FAILURE OCCURRED. A POLICE REPORT WAS FILED AND THERE WERE NO INJURIES. THE INSURANCE COMPANY WAS NOTIFIED AND THEY SENT AN ADJUSTER TO INSPECT THE VEHICLE. THE VEHICLE IS CURRENTLY IN THE INSURANCE COMPANY'S POSSESSION. THE DEALER WAS NOTIFIED AND STATED THAT THEY WOULD BE IN TOUCH. THE FAILURE AND CURRENT MILEAGES WERE 51,000.
Additional Summary:

Toyota ID No:
NHTSA ODI No: 10272634
Date of Incident: 20090531
Vehicle: 2003 TOYOTA TUNDRA
Location of Incident: SPARKS, NV
NHTSA Summary:
DRIVING AT HIGHWAY SPEED, WITH CRUISE CONTROL ENGAGED, AND BEGINNING TO CLIMB A GENTLE HILL, ENGINE SUDDENLY ACCELERATES AT FULL THROTTLE, AND THE TRANSMISSION DOWNSHIFTS TWO GEARS. IT CAUSES THE VEHICLE TO SUDDENLY AND RAPIDLY ACCELERATE. VEHICLE IS VERY DIFFICULT TO CONTROL ON SNOWY, OR RAIN SLICK ROADWAYS. FOLLOWING ANOTHER VEHICLE THAT SLOWS ON HILL, SUCH AS A SEMI TRACTOR-TRAILER, THERE IS EMINENT DANGER OF A REAR-END COLLISION. THIS IS NOT AN ISOLATED INCIDENT. IT OCCURS EVERY TIME THESE CONDITIONS ARE MET: 1. CRUISE CONTROL IS ENGAGED. 2. VEHICLE DRIVES UP INCLINE OR HILL. 3. HIGHWAY SPEED. *TR
Additional Summary:

Toyota ID No:
NHTSA ODI No: 10278059
Date of Incident: 20090605
Vehicle: 2002 TOYOTA CAMRY
Location of Incident: MINNETONKA, MN
NHTSA Summary:
WHILE MY WIFE (DRIVER FOR 40 YEARS) WAS BACKING OUT OF THE DRIVEWAY THE CAR ACCELERATED AT FULL THROTTLE, SHOT ACROSS THE STREET AND INTO THE NEIGHBOR'S YARD AND CRASHED INTO A TREE WHICH PREVENTED THE CAR FROM CRASHING INTO THE HOUSE. *TR
Additional Summary:

Toyota ID No:
NHTSA ODI No: 10298834
Date of Incident: 20090608
Vehicle: 2008 TOYOTA SOLARA
Location of Incident: CENTERVILLE, VA
NHTSA Summary:
TL* THE CONTACT OWNS A 2008 TOYOTA SOLARA. WHILE RELEASING THE PARKING BRAKE AT A STOP LIGHT, THE VEHICLE ACCELERATED WITHOUT INTENTION. AS A CONSEQUENCE, HE REAR-ENDED ANOTHER VEHICLE. IN ORDER TO STOP THE VEHICLE FROM MOVING FORWARD HE HAD TO SHIFT INTO THE NEUTRAL GEAR, AND THEN REMOVE THE KEY FROM THE IGNITION. THE CURRENT AND FAILURE MILEAGES WERE 11500.
Additional Summary:

Toyota ID No:
NHTSA ODI No: 10288952
Date of Incident: 20090608
Vehicle: 2007 TOYOTA 4RUNNER
Location of Incident: OXNARD, CA
NHTSA Summary:

TL* THE CONTACT OWNS A 2005 TOYOTA 4RUNNER. WHILE DRIVING 45 MPH WITH THE CRUISE CONTROL ACTIVATED, THE ACCELERATOR BECAME STUCK. AFTER REPEATED BRAKE APPLICATION, THE VEHICLE WOULD NOT STOP. AFTER DEACTIVATING THE CRUISE CONTROL, SHE WAS ABLE TO STOP THE VEHICLE. THE DEALER WAS NOTIFIED, AND A TECHNICIAN CONCLUDED THAT THE FLOOR MAT WAS THE CAUSE OF THE FAILURE; HOWEVER, SHE BELIEVED THAT THE TECHNICIAN HAVE INCORRECTLY IDENTIFIED THE CAUSE OF THE FAILURE. THE FAILURE MILEAGE WAS 48,675.
Additional Summary:

Toyota ID No:
NHTSA ODI No: 10293564
Date of Incident: 20090610
Vehicle: 2001 TOYOTA SIENNA
Location of Incident: GARDENA, CA
NHTSA Summary:
5 MONTHS AGO MY SON WAS DRIVING MY CAR AND IT SUDDENLY ACCELERATED AND HE COULD NOT GET THE CAR TO STOP EVEN WHEN HE PUT ON THE BRAKE. WHEN I GOT THE CAR, I STARTED THE ENGINE AND IT LONGED FORWARD, BUT I PUT THE CAR IN NEUTRAL AND THE ENGINE JUST RACED. I ULTIMATELY TOOK THE CAR TO MY MECHANIC AND HE TOOK IT SOMEWHERE ELSE WERE THEY REPAIRED THE PROBLEM AFTER TWO ATTEMPTS. MY CAR DID NOT HAVE ANY DRIVER SIDE FLOOR MATS IN IT. *TR
Additional Summary:

Toyota ID No:
NHTSA ODI No: 10274064
Date of Incident: 20090616
Vehicle: 2007 TOYOTA RAV4
Location of Incident: MADRONA, WA
NHTSA Summary:
THE THROTTLE IN MY 2007 RAV4 V4 LIMITED HAS STUCK OPEN THREE TIMES IN THE LAST FEW MONTHS. IT HAPPENS AFTER I "PULLOOK" THE ACCELERATOR. THE FIRST TIME OCCURRED IN MY GARAGE AS I WAS TRYING TO START THE ENGINE. I HAD TO TURN IT OFF. THE SECOND TIME WAS A WEEK LATER AS I WAS PASSING A TRUCK GOING UP A HILL ON A 3 LANE HIGHWAY. I PUT ON THE BRAKES AND TRIED TO GET THE TRANSMISSION INTO NEUTRAL AS I TRIED TO GET TO CROSS TWO LANES OF TRAFFIC TO GET TO THE SHOULDER. I WAS SUCCESSFUL WITHOUT GETTING INTO AN ACCIDENT, BUT IT WAS SCARY. I TOOK THE CAR TO A DEALER AND THEY SAID THAT THE THROTTLE BODY HAD A LEAK, SO THEY REPLACED THE SEAL. I DID NOT EXPERIENCE THE PROBLEM AGAIN FOR A COUPLE OF MONTHS UNTIL IT HAPPENED AGAIN TWO DAYS AGO. I WAS ACCELERATING TO MERGE WITH TRAFFIC ON A FREEWAY. I APPLIED THE BRAKES AND THE THROTTLE STOPPED STICKING AND QUICKLY RETURNED TO NORMAL OPERATION. *TR
Additional Summary:

Toyota ID No:
NHTSA ODI No: 10294302
Date of Incident: 20090616
Vehicle: 2006 TOYOTA TUNDRA
Location of Incident: WALLACE, CA
NHTSA Summary:

TL* THE CONTACT OWNS A 2006 TOYOTA TUNDRA. WHILE DRIVING 60 MPH AND RELEASING THE ACCELERATOR PEDAL, THE VEHICLE CONTINUED TO ACCELERATE. THE FAILURE ONLY OCCURRED ONCE. THE FAILURE MILEAGE WAS 47900 AND THE CURRENT MILEAGE WAS 55000.
Additional Summary:

Toyota ID No:
NHTSA ODI No: 10274157
Date of Incident: 20090617
Vehicle: 2009 TOYOTA SIENNA
Location of Incident: SIMPSONVILLE, SC
NHTSA Summary:
ATTEMPTED TO ACCELERATE TO PASS A LARGE TRUCK AND VEHICLE STARTED ACCELERATING OUT OF CONTROL. TRIED TO BRAKE AND THAT DIDN'T WORK. APPLIED FOOT BRAKE AND THAT DIDN'T WORK. SPEED MAY HAVE INCREASED TO APPROX 70-80 MPH. SPEEDOMETER SHOW APPROX 45 MPH. UNABLE TO STEER VEHICLE. IT WAS AS IF THE MOTOR HAD STOPPED AND I HAD NO POWER STEERING. AFTER HITTING 2-3 VEHICLES AND THEN THE RIGHT LANE BRIDGE WALL THE FRONT TIRE AND STEERING ASSEMBLY BENT INWARD NO THAT CAUSED THE VAN TO STOP. THAT GOD THAT NOONE WAS INJURED BUT SOMETHING IS SERIOUSLY WRONG. I'VE SEEN SEVERAL COMPLAINTS OF SUDDEN ACCELERATION IN SIENNA VANS AND THIS NEED MUCH ATTENTION. *TR
Additional Summary:

Toyota ID No:
NHTSA ODI No: 10293563
Date of Incident: 20090620
Vehicle: 2003 TOYOTA CAMRY
Location of Incident: WARRINGTON, PA
NHTSA Summary:
2003 TOYOTA CAMRY INVOLVED IN AN 8 CAR ACCIDENT ON 6/20/09. CAR ACCELERATED UNCONTROLLARLY AND DRIVER WAS UNABLE TO STOP CAR. *TR
Additional Summary:

Toyota ID No:
NHTSA ODI No: 10294365
Date of Incident: 20090625
Vehicle: 2002 TOYOTA CAMRY
Location of Incident: HACKETTSTOWN, NJ
NHTSA Summary:
TL* THE CONTACT OWNS A 2003 TOYOTA CAMRY. WHILE DRIVING INTO A SHOPPING CENTER, THE VEHICLE ACCELERATED UNCONTROLLARLY. THE CONTACT APPLIED EXTREME PRESSURE TO THE BRAKE PEDAL; HOWEVER, THE VEHICLE FAILED TO SLOW DOWN. THE CONTACT WAS ABLE TO AVOID CRASHING INTO THE FRONT OF A BUILDING; HOWEVER, HE CRASHED INTO A DUMPSTER AND THE BACK OF THE BUILDING. THE VEHICLE WAS DESTROYED. THE AIR BAGS DEPLOYED. THE CONTACT SUSTAINED BROKEN RIBS, NUMEROUS BRUISES AND CONTUSIONS. THE CONTACT HAS NOT CONFIRMED IF THE FLOOR MATS CAUSED THE VEHICLE TO ACCELERATE. THE CURRENT AND FAILURE MILEAGES WERE 81,000.
Additional Summary:

Toyota ID No:

NHTSA ODI No: 10290389
Date of Incident: 20090628
Vehicle: 2005 TOYOTA CAMRY
Location of Incident: LOS ANGELES, CA
NHTSA Summary:
TL* THE CONTACT OWNS A 2005 TOYOTA CAMRY. WHILE EXITING A PARKING SPACE THE VEHICLE ACCELERATED WITHOUT INTENTION. AS A CONSEQUENCE HE REAR-ENDED ANOTHER VEHICLE, NO ONE WAS INJURED BUT THERE WAS OVER $5000 DAMAGED TO THE OTHER VEHICLE. HE FILED CASE # 09090447-01 WITH THE MANUFACTURER. THE FAILURE MILEAGE WAS 46,000.
Additional Summary:

Toyota ID No:
NHTSA ODI No: 10295311
Date of Incident: 20090629
Vehicle: 2000 TOYOTA RAV4
Location of Incident: RADDUCK, MA
NHTSA Summary:
TL* THE CONTACT OWNS A 2000 TOYOTA RAV 4. WHILE DRIVING 10 MPH THE VEHICLE BEGAN TO ACCELERATE WITHOUT INTENTION. THE BRAKE PEDAL WAS DEPRESSED TO THE FLOOR, BUT THE VEHICLE WOULD NOT DECELERATE. THE VEHICLE WAS TAKEN TO THE DEALER ON SEVERAL OCCASIONS, BUT THEY COULD NOT IDENTIFY THE CAUSE OF THE FAILURE. THE FAILURE MILEAGE WAS 5,200. UPDATED 1/11/09 *CN UPDATED 01/12/10 *JB
Additional Summary:

Toyota ID No:
NHTSA ODI No: 10293688
Date of Incident: 20090708
Vehicle: 2007 TOYOTA COROLLA
Location of Incident: WINTON SALEM, NC
NHTSA Summary:
TL* THE CONTACT OWNS A 2007 TOYOTA COROLLA. WHILE REVERSING OUT OF HIS DRIVEWAY THE VEHICLE ACCELERATED BACKWARDS WITHOUT INTENTION. AFTER REPEATED BRAKE APPLICATION HE WAS ABLE TO STOP THE VEHICLE. THE MANUFACTURER WAS IN THE PROCESS OF BEING NOTIFIED OF THE FAILURE. THE FAILURE MILEAGE WAS 7,000. THE CURRENT MILEAGE WAS 12,000.
Additional Summary:

Toyota ID No: 20070712237
NHTSA ODI No: 10290389
Date of Incident: 20090709
Vehicle: 2007 TOYOTA YARIS
Location of Incident: TUSTIN, CA
NHTSA Summary:
TL* THE CONTACT OWNS A 2007 TOYOTA YARIS. WHILE DRIVING BETWEEN 65-70 MPH SHE APPLIED PRESSURE TO THE BRAKES BUT THE VEHICLE WOULD NOT STOP. HE WAS ABLE TO DECELERATE BY SHIFTING THE VEHICLE INTO THE NEUTRAL GEAR. 2 WEEKS LATER THE VEHICLE ACCELERATED WITHOUT WARNING ONTO THE HIGHWAY. THE DEALER COULD NOT PROVIDE A REMEDY BECAUSE THE FAILURE COULD NOT BE DUPLICATED. THE CURRENT MILEAGE WAS 18,500 AND THE FAILURE MILEAGE WAS 5500.
Additional Summary:

I bought a 2007 Toyota Yaris with power package at Tustin Toyota in Tustin, CA, on Aug. 17, 2006. I had an incident around July 12, 2007, that I reported to Toyota that day. Case #20070712237.

Toyota ID No:
NHTSA ODI No: 10276568
Date of Incident: 20090713
Vehicle: 2003 TOYOTA YARIS
Location of Incident: ALTIA, IA
NHTSA Summary:
ACCELERATOR PEDAL STICKING. I TOOK MY FOOT AWAY FROM THE GAS PEDAL IN PREPARATION FOR MY TURN PEDAL STUCK, AND CONTINUED TOO ACCELERATE I HAD TO DEPRESS BRAKES TO STOP CAR AND GAS PEDAL RELEASED. *TR
Additional Summary:

Toyota ID No:
NHTSA ODI No: 10293241
Date of Incident: 20090715
Vehicle: 2004 LEXUS ES330
Location of Incident: CHESAPEAKE, VA
NHTSA Summary:
UPON STARTING AND PUTTING CAR IN REVERSE ENGINE EXPERIENCED UNCONTROLLABLE EXCELERATION. CAR TE BACKED ACROSS A THE TRAFFIC LANE IN A PARKING LOT WITH THE BRAKES APPLIED STUCK TWO PARKED CARS AND ENDED UP ON TOP OF A PLANTING AREA AFTER HITTING A TREE PLANTED THERE. POLICE WERE CALLED AND RESPONDED. THE CAR HAS BEEN LOOKED AT BY A MECHANIC BUT COULD NOT FIND A VISIBLE PROBLEM WITH THE ACCELERATOR.
Additional Summary:

Toyota ID No:
NHTSA ODI No: 10280359
Date of Incident: 20090715
Vehicle: 2007 TOYOTA HIGHLANDER
Location of Incident: FALLS CHURCH, VA
NHTSA Summary:
MY ACCELERATOR PEDAL GOT CAUGHT BETWEEN MY TOES AND BOTTOM OF MY FOOT AND THE BOTTOM OF AN OPEN-TOED SHOE AND I COULD NOT PULL MYSELF FREE TO STOP MY CAR AND I RAN INTO A STOPPED CAR IN FRONT OF ME AT AN INTERSECTION, WHICH WAS PUSHED INTO ANOTHER CAR. I WAS TRAVELING VERY SLOWLY, BUT MY ACTIVITY IN TRYING TO FREE MY FOOT CAUSED MY CAR TO ACCELERATE. SOME THIN HAD NEVER HAPPENED TO ME BEFORE. WHEN I TOLD A NEIGHBOR SHE SAID THE SAME THING HAD HAPPENED TO HER, BUT THAT SHE WAS NOT OUT IN TRAFFIC AT THE TIME. I NOTICED THAT BOTH OF OUR VEHICLES HAVE VERY NARROW ACCELERATOR PEDALS, AND THAT THIS COULD HAVE HAPPENED TO ANYONE. I HAVE NOT BEEN DRIVING WITH SANDALS SINCE THEN, BUT A GREAT MANY PEOPLE DO. *TR
Additional Summary:

Toyota ID No:
NHTSA ODI No: 10283568
Date of Incident: 20090715
Vehicle: 2006 TOYOTA TUNDRA
Location of Incident: ALTA LOMA, CA

NHTSA Summary:
TL*THE CONTACT OWNS A 2006 TOYOTA TUNDRA. HE SLIGHTLY TAPPED THE ACCELERATOR PEDAL, AND THEN THE VEHICLES SPEED INCREASED AND CRASHED INTO AN EMBANKMENT. THERE WERE NO REPORTED INJURIES. AN AUTHORIZED TECHNICIAN INSPECTED THE VEHICLE; HOWEVER, HE DID NOT PROVIDE A REMEDY BECAUSE HE COULD NOT DUPLICATE THE FAILURE. HE FILED A COMPLAINT WITH THE MANUFACTURER, IN WHICH A TECHNICIAN SPECIALIST WAS SENT TO INSPECT THE VEHICLE. THE SPECIALIST WAS ALSO UNABLE TO DETERMINE THE CAUSE OF THE FAILURE. THE FAILURE MILEAGE WAS 44,107.
Additional Summary:

Toyota ID No:
NHTSA ODI No: 10290312
Date of Incident: 20090716
Vehicle: 2010 TOYOTA PRIUS
Location of Incident: NEW YORK, NY
NHTSA Summary:
WHILE APPLYING THE BRAKES TO SLOW DOWN OR TO COME TO A STOP, IF THE CAR HITS A BUMP, POTHOLE OR THE LIKE, THE BRAKES RELEASE MOMENTARILY, CAUSING THE CARS MOMENTUM TO CONTINUE FORWARD LONGER/FURTHER THAN YOU WOULD NORMALLY EXPECT OR WANT. THIS IS ESPECIALLY DANGEROUS WHEN COMING TO A STOP AT A NEW YORK CITY PEDESTRIAN CROSSWALK OR TRYING TO SLOW DOWN WITH A CAR CLOSE IN FRONT OF YOU. I BROUGHT THE CAR INTO THE DEALERSHIP AND HAD IT EVALUATED BY TOYOTA'S FIELD TECHNICAL SPECIALIST WHO REPORTED THE FOLLOWING, "WHEN THE CAR HITS SOMETHING WHEEL SLIP, IT WILL FIRST DISABLE THE REGENERATIVE BRAKES. WHEN IT DOES THAT IT FEELS LIKE THE CAR SORT OF ACCELERATES BECAUSE YOU LOST THE REGENERATIVE BRAKING AND YOU'RE USING THE BRAKES ASSIST THAT YOU HAVE FROM YOUR FOOT. SO THAT IS NORMAL OPERATION ON THE SYSTEM. IT IS WORKING AS DESIGNED." DESPITE THE EXPLANATIONS FOR WHY THIS IS HAPPENING AND WHETHER OR NOT THIS IS ANORMAL OPERATIONS, THE BOTTOM LINE IS, IF THE CAR IS NOT STOPPING WHEN IT SHOULD, THE SAFETY OF PASSENGERS AND PEDESTRIANS IS IN JEOPARDY. I CALLED AND WROTE TWO CERTIFIED LETTERS TO TOYOTA'S CUSTOMER EXPERIENCE DEPARTMENT AND TO AKIO TOYODA, AND RECEIVED A PHONE CALL FROM AN EXECUTIVE ANALYST FROM THE PRESIDENT'S OFFICE. NO TOYOTA REPRESENTATIVE WOULD DO ANYTHING IN REGARDS TO THE PROBLEM--THEY MAINTAIN THAT THE BRAKING OPERATION IS NORMAL. I HAVE SEEN OTHER COMPLAINTS ON THE NHTSA WEB SITE AND ON PRIUS OWNERS BLOGS THAT CONTRADICT TOYOTA'S ASSERTION AND SUPPORT THE CLAIM THAT THE BRAKES ARE INDEED A SAFETY ISSUE THAT MUST BE ADDRESSED.
Additional Summary:

Toyota ID No:
NHTSA ODI No: 10277460
Date of Incident: 20090720
Vehicle: 2007 LEXUS GS350
Location of Incident: OCEANSIDE, CA
NHTSA Summary:
2007 LEXUS GS350 SUDDEN ACCELERATION. THIS IS SIMILAR TO REPORTS ON FILE ON LEXUS 2007 ES350. THE GS350 WILL DRIVE AROUND IN PARKING LOT WITHOUT PRESSING ON GASOLINE PEDAL AT 12-15MPH. AT SPEEDS OF 40MPH A SLIGHT PRESSURE ON GAS PEDAL CAUSES ACCELERATION TO 50-60MPH. I AM FORCED TO DRIVE IT WITH TRIPTRONIC TRANSMISSION TO SLOW VEHICLE BECAUSE EXCESSIVE BRAKE PRESSURE REQUIRED TO STOP IT. THIS IN ON-GOING ISSUE. *TR

Additional Summary:

Toyota ID No:
NHTSA ODI No: 10299168
Date of Incident: 20090724
Vehicle: 2006 LEXUS ES330
Location of Incident: LOS ANGELES, CA
NHTSA Summary:
UNINTENDED ACCELERATION WITH LEXUS VEHICLE. *NJ THE CONSUMER STATED HE SENT A REPORT OF THE VEHICLE ACCIDENT TO NHTSA. THE ACCIDENT WAS DUE TO UNEXPECTED ACCELERATION. THE CONSUMER STATED TOYOTA IS ATTRIBUTING MOST OF THE ACCIDENTS TO FLOOR MAT PROBLEMS WHILE AVOIDING FURTHER INVESTIGATION INTO OTHER POSSIBLE CAUSES. THE CONSUMER'S WIFE WAS DRIVING THE VEHICLE WHEN SUDDENLY THE ENGINE ROARED AND THE VEHICLE SHOT AHEAD, CRASHING OVER A LOW CEMENT WALL, KNOCKING DOWN A METAL RAIL FENCE, COMING TO REST ON TOP OF THE COLLAPSED FENCE WITH HER RIGHT FRONT WHEEL PARTIALLY SUBMERGED IN A BACKYARD POOL. BY THEN THE ENGINE HAD STALLED. *JB UPDATED 01/12/10 *JB THE CONSUMER ALSO STATED THE AIR BAG DID NOT DEPLOY. UPDATED 01/13/10 *JB
Additional Summary:

Toyota ID No:
NHTSA ODI No: 10296543
Date of Incident: 20090724
Vehicle: 2006 LEXUS ES330
Location of Incident: PULESHAK, TX
NHTSA Summary:
WHEN APPROACHING 6-WAY STOP, BRAKES FAILED AND CAR ACCELERATED. CHANGED LANES TO MISS 3 CARS IN FRONT. CAR CONTINUED TO ACCELERATE, BRAKES DID NOT WORK. WENT ON SIDEWALK TO MISS ANOTHER CAR. WENT OVER CROSS STREET & ONTO MEDIAN. HIT SIGNS AND SMALL TREES. CAR CONTINUED ACCELERATING. WENT OVER OTHER SIDE OF CROSS STREET, UP ON GRASS, HITTING SIGNS AND SMALL TREES. HIT BRICK WALL HOLDING SHELL STATION SIGN. CAR STOPPED. AIR BAGS DEPLOYED IN MEDIAN. CAR WAS TOTALED. EVEN SUN ROOF BROKEN. ALL TIRES FLAT. DRIVER & PASSENGERS EXPERIENCED CUTS AND SEVERE BRUISES. WITNESS SAID BRAKE LIGHTS WERE ON BUT CAR CONTINUED TO GAIN SPEED. ACCIDENT NOT CAUSED BY FLOOR MAT. MY CAR DID NOT HAVE THEM. THERE'S A PROBLEM WITH THE ELECTRONIC THROTTLE CONTROL ASSOCIATED WITH THE CRUISE CONTROL SYSTEM & COMPUTER THAT CONTROLS THE ENGINE SPEED. IN THE LEXUS ES AND IS MODELS. HUNDREDS OF PEOPLE HAVE EXPERIENCED ACCIDENTS WITH THESE CARS. DISAPPOINTED THAT NHTSA SIDES WITH TOYOTA AND ACCEPTS ITS COVERUP THAT IT'S A FLOOR MAT PROBLEM! SOMEONE AT NHTSA NEEDS TO INVESTIGATE THIS SERIOUS PROBLEM BEFORE HUNDREDS OF OTHERS ARE KILLED OR INJURED. TOYOTA HAS KNOWN ABOUT THIS PROBLEM FOR AT LEAST THREE YEARS. MY CAR IS NOT INCLUDED IN THE FLOOR MAT RECALL YET IT WENT INTO THE SAME UNCONTROLLED ACCELERATION AS HUNDREDS OF OTHER LEXUS CARS HAVE IN THE PAST FEW YEARS. WHAT DO WE HAVE TO DO TO GET THE NHTSA TO DO ITS JOB? *TR. TL* THE CONTACT OWNS A 2006 LEXUS ES330. WHILE DRIVING ON A RESIDENTIAL STREET AT 15 MPH HE APPROACHED THE INTERSECTION. HE ATTEMPTED TO ENGAGE THE BRAKE PEDAL AND WAS UNABLE TO STOP THE VEHICLE. TO AVOID CRASHING INTO A VEHICLE HEAD ON, HE CRASHED INTO THE CENTER BARRIER AND A STOP SIGN AT THE GAS STATION. THE VEHICLE STOPPED MOVING WHEN IT CRASHED INTO THE GAS STATION BRICK SIGN. THE DRIVER AND PASSENGER AIR BAGS DEPLOYED AND A TIRE BLOW OUT ALSO OCCURRED. THERE WERE NO INJURIES. THE INSURANCE

COMPANY WILL INVESTIGATE THE FAILURE. THE CURRENT AND THE FAILURE MILEAGES WERE 22,000.
Additional Summary:

Toyota ID No:
NHTSA ODI No:
Date of Incident: 20090723
Vehicle: 2004 TOYOTA CAMRY
Location of Incident: FRESNO, CA
NHTSA Summary:
SUA - VEHICLE STRUCK CEMENT PILLAR. MS. O'NEAL DESCRIBED AN INCIDENT THAT OCCURRED WHEN SHE WAS PULLING INTO A PARKING PLACE AND THE VEHICLE SUDDENLY ACCERATED. THE CAR COLLIDED WITH A CONCRETE BARRIER CAUSING ABOUT $5,000 WORTH OF DAMAGE TO THE VEHICLE. SHE SAID THERE HAVE BEEN SEVERAL OTHER OCCASIONS WHEN THE VEHICLE WOULD CONTINUE TO ACCELERATE AS SHE WAS PULLING INTO A PARKING LOT FROM THE ROADWAY. SHE SAID SHE WOULD APPLY THE BRAKES AND STOP THE ACCELERATION. SHE SAID SHE IS CERTAIN SHE IS NOT AT FAULT BECAUSE HER FOOT WAS COMPLETELY OFF THE ACCELERATOR. SHE ALSO SAID THAT A CO-OWNER WHO BORROWED HER VEHICLE REPORTED A SIMILAR INCIDENT. MS. O'NEAL SAID SHE IS STILL DRIVING THE VEHICLE AND IS UNABLE TO SELL IT BECAUSE IT WAS INVOLVED IN AN ACCIDENT AND SHE CANNOT GET A FAIR PRICE.
Additional Summary:

Toyota ID No:
NHTSA ODI No: 10274950
Date of Incident: 20090803
Vehicle: 2006 LEXUS GS300
Location of Incident: MOSKIE, IL
NHTSA Summary:
A FEW MONTHS AFTER I BOUGHT MY 2006 LEXUS GS300 IN JAN., 2006, I EXPERIENCED THE SUDDEN ACCELERATION OF MY CAR. I WAS PASSING A CAR AND WHEN I TOOK MY FOOT OFF OF THE GAS PEDAL IT CONTINUED TO ACCELERATE. I TRIED THE BRAKE BUT IT SEEMED FROZEN. IT DIDNT MOVE AT ALL. I QUICKLY THREW THE CAR INTO NEUTRAL, AND AS I WAS ABOUT TO HIT THE CAR IN FRONT OF ME, I SHIFTED INTO PARK. IT WAS THE ONLY WAY TO GET THE CAR TO STOP. THEN I TURNED THE CAR OFF. THE FIRST TIME I ATTEMPTED TO START THE CAR BACK UP, IT RACED ON THE SECOND ATTEMPT IT SEEMED TO START UP NORMALLY, AND I DROVE IT TO WORK. I TOOK THE CAR IN TO THE DEALER THE NEXT DAY. THEY SAID EVERYTHING CHECKED OUT FINE. THE OTHER EVENING 8/3/09, A LITTLE MORE THAN 2 YEARS AFTER THE FIRST INCIDENT, MY WIFE WAS DRIVING ON THE HIGHWAY, WITH ME IN THE PASSENGER SEAT. AS THE WAS ACCELERATING, ALL OF A SUDDEN WHEN SHE TOOK HER FOOT OFF OF THE ACCELERATOR, THE PEDAL CONTINUED TO MOVE TOWARD THE FLOOR. IT GOT UP TO 80 MILES AN HOUR, WHEN SHE DID AS I DID, PUT IT IN NEUTRAL, PULL OVER ON THE SHOULDER, AND THROW IT INTO PARK. SHE WAS FRANTIC, CALLING THE CAR A " DEATHTRAP " . I CALLED THE DEALER FOR A TOW AND WHEN I DESCRIBED WHAT HAPPENED, HE SAID IT WAS PROBABLY THE MATS. NO WAY. EVEN AFTER WE MOVED THE MAT COMPLETELY AWAY AND RESTARTED THE CAR, THE RPM'S RACED UP. EVEN THE TOW TRUCK DRIVER SAID THE CAR RACED AND " JUMPED " WHEN HE PULLED IT ONTO THE FLATBED . THE DEALER CALLED THE NEXT DAY AND SAID THE CAR IS FINE. I TOLD HIM I WANT THEM TO KEEP THE CAR UNTIL THEY FIGURE OUT THE PROBLEM AND FIX IT. I HAD A LOANER FOR A COUPLE DAYS AND THEN THE DEMANDED IT BACK. I SAID I DON'T WANT MY CAR BACK UNTIL ITS FIXED OR, THEY GIVE ME A NEW ONE. I CAN'T

SUPPLY THE VIN RIGHT NOW BECAUSE THE CAR IS STILL AT THE DEALER, BUT I CAN GET IT. *TR
Additional Summary:

Toyota ID No:
NHTSA ODI No: 10279787
Date of Incident: 20090804
Vehicle: 2005 TOYOTA CAMRY
Location of Incident: ANN ARBOR, MI
NHTSA Summary:
I WAS DRIVING MY MOTHER'S 2005 TOYOTA CAMRY WHEN IT CRASHED INTO A TREE. WHEN THE CAR ACCELERATED RAPIDLY OVER ABOUT 50 FT. ON ITS OWN - NO FEET ON EITHER PEDAL. I WAS GOING VERY SLOWLY AT THE TIME AS I WAS TURNING AROUND AND HAD JUST PUT THE CAR INTO DRIVE FROM REVERSE. I KEPT TELLING MYSELF TO REMOVE MY FOOT FROM THE ACCELERATOR AND DID SO. SINCE THE CAR WAS POINTED SLIGHTLY UPHILL AT THE TIME, NO BRAKING SHOULD HAVE BEEN NEEDED. *TR
Additional Summary:

Toyota ID No:
NHTSA ODI No: 10290857
Date of Incident: 20090805
Vehicle: 2004 TOYOTA CAMRY
Location of Incident: TORRANCE, CA
NHTSA Summary:
TL* THE CONTACT OWNS A 2004 TOYOTA CAMRY. THE CONTACT WAS TRAVELING IN A PARKING LOT AT LESS THAN 5 MPH. THERE WAS SLIGHT PRESSURE APPLIED TO THE ACCELERATOR PEDAL, FOLLOWED BY AN UNINTENDED INCREASE IN ACCELERATION. AFTER A FEW MINUTES PRESSURE WAS APPLIED TO THE BRAKE PEDAL WITH FORCE AND THE VEHICLE FAILED TO SLOW DOWN AND CRASHED INTO A TREE. THE POLICE AND AMBULANCE WERE NOT NOTIFIED. THE DRIVER SUSTAINED INJURY TO THE LEFT KNEE. THE CONTACT WAS ABLE TO DRIVE THE VEHICLE FROM THE SCENE WITH CAUTION. AN AUTO BODY COLLISION MECHANIC STATED THAT THERE WERE DAMAGES TO THE FRONT END OF THE VEHICLE WITH AN ESTIMATED REPAIR COST OF $7000.00. THE CONTACT HAD CONCERNS OF THE SAFETY RISK INVOLVED. THE FAILURE MILEAGE WAS 38,000. THE CURRENT MILEAGES WAS 43,000.
Additional Summary:

Toyota ID No:
NHTSA ODI No: 10280119
Date of Incident: 20090806
Vehicle: 2008 TOYOTA 4RUNNER
Location of Incident: MEDWAY, NY
NHTSA Summary:
TL* THE CONTACT OWNS A 2008 TOYOTA 4RUNNER. THE CONTACT STATED THAT THE VEHICLE ACCELERATED UNINTENTIONALLY WHILE DRIVING 50 MPH. SHE HAD TO DEPRESS THE BRAKE PEDAL WITH SUCH FORCE THAT SHE DESTROYED THE ENTIRE BRAKING SYSTEM. THE DEALER HAD TO REPLACE THE ENTIRE BRAKING SYSTEM BECAUSE THE BRAKES WERE SO HOT THAT THEY DESTROYED THE ROTORS AND THE PADS. THE VEHICLE IS STILL AT THE DEALER AND THE CONTACT DOES NOT WANT TO PICK IT UP. THE VIN WAS UNKNOWN. THE FAILURE MILEAGE WAS 16,000.
Additional Summary:

Toyota ID No:
NHTSA ODI No: 10280246
Date of Incident: 20090806
Vehicle: 2005 SCION XA
Location of Incident: SPRING VALLEY, CA
NHTSA Summary:
TL* THE CONTACT OWNS A 2005 TOYOTA SCION XA. WHILE DRIVING APPROXIMATELY 30 MPH, THE VEHICLE ACCELERATED AGGRESSIVELY. THE CONTACT DEPRESSED THE BRAKE PEDAL, BUT THE VEHICLE FAILED TO SLOW DOWN. THE GEAR WAS SHIFTED INTO NEUTRAL AND THE VEHICLE SLOWED DOWN. THE FAILURE OCCURRED WITHOUT WARNING. THE FAILURE RECURRED ON A SEPARATE OCCASION AND THE VEHICLE CRASHED INTO A BUILDING AND STRUCK A PEDESTRIAN. THE PEDESTRIAN WAS TRANSPORTED TO THE HOSPITAL AND THE POLICE WAS CALLED TO THE SCENE. A POLICE REPORT WAS FILED. THE VEHICLE WAS TAKEN TO AN AUTHORIZED DEALER FOR INSPECTION AND THEY STATED THAT THE REPAIRS WOULD COST $2,500. THE VEHICLE IS IN THE PROCESS OF BEING REPAIRED. THE FAILURE AND CURRENT MILEAGES WERE 68,000.
Additional Summary:

Toyota ID No:
NHTSA ODI No: 10290616
Date of Incident: 20090809
Vehicle: 2002 TOYOTA CAMRY
Location of Incident: FLORISSANT, MO
NHTSA Summary:
TL* THE CONTACT OWNS A 2002 TOYOTA CAMRY. WHILE PULLING TO THE VALVOLINE SERVICE STATION TO GET AN OIL CHANGE THE VEHICLE ACCELERATED UNINTENTIONALLY AND DROVE THROUGH THE SERVICE BAY, THE GAS STATION, AND THEN ONTO A NEW STREET. THE VEHICLE EVENTUALLY CAME TO A COMPLETE STOP. THE DEALER NOR THE MANUFACTURE WERE CONTACTED. SHE WAS PARKING HER VEHICLE WHEN THE SECOND FAILURE OCCURRED, CONSEQUENTLY SHE CRASHED INTO SEVERAL VEHICLES. THE FAILURE MILEAGE WAS 60945.
Additional Summary:

Toyota ID No:
NHTSA ODI No: 10285817
Date of Incident: 20090810
Vehicle: 2001 TOYOTA CAMRY SOLARA
Location of Incident: NAPA, CA
NHTSA Summary:
TL* THE CONTACT OWNS A 2001 TOYOTA SOLARA. THE CONTACT STATED WHEN ENTERING A PARKING SPACE SHE EXPERIENCED UNINTENDED VEHICLE ACCELERATION, AS A CONSEQUENCE, SHE CRASHED INTO A BRICK WALL. HER VEHICLE RECEIVED $3000.00 WORTH OF DAMAGE. THE CAUSE OF THE FAILURE WAS BECAUSE OF AN INTERFERENCE OF THE ACCELERATOR PEDAL AND THE FLOOR MAT. THE FAILURE AND CURRENT MILEAGES WERE UNKNOWN.
Additional Summary:

Toyota ID No:
NHTSA ODI No: 10285824
Date of Incident: 20090812

Vehicle: 2001 TOYOTA ECHO
Location of Incident: OAKLAND, CA
NHTSA Summary:
TL* THE CONTACT OWNS A 2001 TOYOTA ECHO. WHILE ENTERING A RAMP AT 50 MPH, THE FLOOR MAT CAUSED THE ACCELERATOR PEDAL TO GET STUCK IN THE FULL OPEN POSITION. SHE WAS ABLE TO REMOVE THE FLOOR MAT AND AVOID A CRASH. THE FAILURE AND CURRENT MILEAGES WERE 67,000.
Additional Summary:

Toyota ID No:
NHTSA ODI No: 10280296
Date of Incident: 20090812
Vehicle: 2007 TOYOTA RAV4
Location of Incident: BEND, OR
NHTSA Summary:
MY 2007 TOYOTA RAV4 4CYL 4 X 4 HESITATES FOR SEVERAL SECONDS WHEN I DEPRESS THE GAS PEDAL. THIS HAS BEEN GOING ON SINCE I BOUGHT THE VEHICLE NEW IN 2007, BUT HAS RECENTLY BEGUN TO GET WORSE. TODAY AS I ATTEMPTED TO PULL INTO TRAFFIC WITH MY WIFE AND TWO SMALL CHILDREN IN THE VEHICLE, IT HESITATED AND NEARLY GOT US INTO AN ACCIDENT.
Additional Summary:

Toyota ID No:
NHTSA ODI No: 10281512
Date of Incident: 20090815
Vehicle: 2010 TOYOTA PRIUS
Location of Incident: LANSDALE, PA
NHTSA Summary:
TL * THE CONTACT OWNS A 2010 TOYOTA PRIUS. WHILE DRIVING OVER LARGE AND SMALL SPEED BUMPS THE VEHICLE ACCELERATED WITHOUT WARNING, AS A CONSEQUENCE HIS REPORTED SERIOUS INJURY AND CRASH WERE INCIDENTED. HE IS IN THE PROCESS OF HAVING THE VEHICLE INSPECTED TO DETERMINE THE CAUSE OF THE FAILURE. THE FAILURE AND CURRENT MILEAGES WERE 1,000. UPDATED 09/14/09 *HS' THE CONSUMER STATED ON 4 SEPARATE OCCASIONS , WITH 3 DIFFERENT DRIVERS, SUDDEN, BRIEF, UNEXPLAINED ENGINE ACCELERATION WAS EXPERIENCED WHEN A BUMP WAS HIT ON THE ROAD WHILE APPLYING THE BRAKES. THE DRIVER COULD HEAR THE ENGINE REV UP AND THERE WAS A SURGE OF POWER FROM THE ENGINE DESPITE HER FOOT NOT BEING ON THE ACCELERATOR, BUT BEING ON THE BRAKE. IN EACH OF THE 4 INCIDENTS THE CONSUMER AND SECOND DRIVER WERE ABLE TO STOP SAFELY, BUT WERE PUT AT RISK OF AN ACCIDENT AND/OR INJURY DUE TO THE ERRONEOUS ACCELERATION. UPDATED 09.15.09. *FB
Additional Summary:

Toyota ID No:
NHTSA ODI No: 10281553
Date of Incident: 20090816
Vehicle: 2004 TOYOTA CAMRY
Location of Incident: MONROVIA, CA
NHTSA Summary:
TL* THE CONTACT OWNS A 2004 TOYOTA CAMRY 4-CYLINDER VEHICLE WHICH WAS PURCHASED IN 2004. WHILE DRIVING SPEEDS OF LESS THAN 5 MPH THERE WAS AN UNEXPECTED SURGE AT 1,000 RPMS, THE VEHICLE RAPIDLY ACCELERATED AND THE

CONTACT ALMOST CRASHED INTO THE GARAGE. AN INDEPENDENT MECHANIC STATED THAT THERE WAS A FAULTY COMPUTER CHIP IN THE GAS PEDAL. THE COMPUTER CHIP WAS REPLACED AT THE OWNER'S EXPENSE FOR $730. THE MANUFACTURER ADVISED THE CONTACT THAT THEY WOULD CALL HIM BACK AFTER THEY SPOKE WITH MANAGEMENT. THE FAILURE AND CURRENT MILEAGES WERE APPROXIMATELY 36,000.
Additional Summary:

Toyota ID No:
NHTSA ODI No: 10290818
Date of Incident: 20090816
Vehicle: 2003 TOYOTA COROLLA
Location of Incident: WATERBURY, CT
NHTSA Summary:
TL* THE CONTACT OWNS A 2003 TOYOTA COROLLA. WHILE APPROACHING A STOP LIGHT BETWEEN 2 TO 10 MPH THE VEHICLE ACCELERATED PAST THE LIGHT WITHOUT INTENTION. THE VEHICLE WAS TAKEN TO THE DEALER, BUT THEY COULD NOT FIND THE PROBLEM. THE FAILURE MILEAGE WAS 105,000.
Additional Summary:

Toyota ID No:
NHTSA ODI No: 10296095
Date of Incident: 20090816
Vehicle: 2007 TOYOTA HIGHLANDER
Location of Incident: LA MESA, CA
NHTSA Summary:
TL * THE CONTACT OWNS A 2007 TOYOTA HIGHLANDER. WHEN ENTERING A PARKING SPACE THE VEHICLE ACCELERATED FORWARD WITHOUT INTENTION. CONSEQUENTLY SHE CRASHED INTO A SIGN. THE VEHICLE WAS TAKEN TO THE DEALER. THE TECHNICIAN INSTALLED A SECONDARY HOOK TO SECURE THE FLOOR MAT. THE FAILURE MILEAGE WAS 50,000. THE CURRENT MILEAGE WAS 50,000.
Additional Summary:

Toyota ID No:
NHTSA ODI No: 10292642
Date of Incident: 20090826
Vehicle: 2003 TOYOTA COROLLA
Location of Incident: DURHAM, NC
NHTSA Summary:
I WAS DRIVING ALONG A RESIDENTIAL STREET (35 MPH) AND I WAS STOPPED AT A STOPLIGHT. WHEN THE LIGHT CHANGED, I BEGAN ACCELERATING UPHILL. ONCE I REACHED MY DESIRED SPEED OF 35 MPH, I REMOVED MY FOOT FROM THE ACCELERATOR BUT THE CAR CONTINUED TO INCREASE IN SPEED (I WAS STILL TRAVELING UPHILL). I IMMEDIATELY PUT THE CAR INTO NEUTRAL, PULLED OFF TO THE SIDE OF THE ROAD, AND TURNED THE IGNITION OFF. FIFTEEN MINUTES LATER, I TURNED THE CAR BACK ON AND THE ENGINE IMMEDIATELY REVVED UP, ALTHOUGH MY FOOT WAS NOT ON THE ACCELERATOR. BASED ON THE SOUND OF THE ENGINE, I WOULD ESTIMATE THAT IT SURPASSED 4000 RPM. I TURNED THE CAR OFF AND 15 MINUTES LATER I TURNED THE CAR ON ONLY TO REST WITH THE SAME RESULTS. WHEN THE TOW TRUCK DRIVER ARRIVED, HE NOTICED THAT THE THROTTLE VALVE WAS STUCK IN THE OPEN POSITION. HE CLOSED THE THROTTLE AND THIS FIXED THE PROBLEM. A FEW DAYS LATER, I BROUGHT THE CAR TO A TOYOTA DEALER. THEY TOLD ME THAT THERE WAS A KINK IN THE THROTTLE CABLE THAT MAY HAVE CAUSED IT TO GET STUCK. HOWEVER, THEY

WERE NOT ABLE TO PROVIDE A DEFINITIVE DIAGNOSIS BECAUSE THE PROBLEM WAS NOT REPEATABLE AND, THEREFORE, DID NOT REPLACE THE CABLE. I HAVE HAD THE CAR FOR 6.5 YEARS AND THIS HAS ONLY HAPPENED TWICE (THE OTHER TIME WAS IN EARLY 2009 AND OCCURRED ON A HIGHWAY). IN LIGHT OF RECENT MEDIA REPORTS ON ACCELERATION PROBLEMS IN TOYOTAS, I MUST NOTE THAT I HAVE THE ORIGINAL FLOOR MATS AND THAT THEY ARE, AND ALWAYS HAVE BEEN, PROPERLY SECURED IN PLACE. I DID NOT NOTICE WHETHER OR NOT THE ACCELERATOR WAS STUCK, BUT I WAS ONLY TRAVELING 35 MPH, SO THE ACCELERATOR WAS NOT DEPRESSED ENOUGH TO GET CAUGHT UNDER THE FLOOR MAT. THE CAR IS ARE STILL AVAILABLE SINCE I DID NOT REPLACE THE CABLE. *TR
Additional Summary:

Toyota ID No:
NHTSA ODI No:
Date of Incident: 20090827
Vehicle: 2009 TOYOTA RAV4
Location of Incident: ELMHURST, NY
NHTSA Summary:
3 passengers injured - Driver was ticketed for unsafe lane change. Per accident report "the driver was on I-80 traveling westbound when change lanes unsafely from the driving lane to the passing lane at unsafe speeds resulted in losing control of the vehicle striking a tree in the median of the south side of the roadway."
Additional Summary:

Toyota ID No:
NHTSA ODI No: 10281433
Date of Incident: 20090831
Vehicle: 2003 TOYOTA CAMRY
Location of Incident: WANSEBORO, PA
NHTSA Summary:
I PURCHASED A 2003 TOYOTA CAMRY IN THE FALL OF 2002. ONE WEEK AFTER THE PURCHASE I WAS AT A STOP SIGN, WITH MY FOOT ON THE BRAKE, AND THE CAR SUDDENLY ACCELERATED. I TAPPED THE ACCELERATOR BUT THE ENGINE CONTINUED TO ACCELERATE WITH THE TACHOMETER READING NEARLY 5,000 RPMS. I TURNED THE ENGINE OFF WITH THE IGNITION. THE NEXT DAY I CALLED MY DEALER (FITZGERALD TOYOTA, CHAMBERSBURG, PA) AND REPORTED THE INCIDENT AND IT WAS SUGGESTED I HAD STEPPED ON THE ACCELERATOR VS. THE BRAKE. I DIDN'T ARGUE THE POINT AND THE CAR PERFORMED FINE FOR UNTIL TWO WEEKS AGO WHEN THE SAME THING HAPPENED TWICE WITHIN THREE DAYS. I SPOKE WITH FITZGERALD TOYOTA YESTERDAY (8/5/ NEWSWEEK) TO ASCERTAIN IF ANYONE ELSE HAD REPORTED A SIMILAR PROBLEM. I WAS TOLD "FITZGERALD HADN'T HEARD ANYTHING ABOUT A PROBLEM WITH SUDDEN ACCELERATION. THIS MORNING I CHECKED ON THE INTERNET AND FOUND THIS PROBLEM WAS FAIRLY COMMON WITH TOYOTAS OF THAT YEAR PLUS OTHER YEARS/MODELS. IS THE NHTSA AWARE OF A PROBLEM WITH TOYOTA'S AND SUDDEN ACCELERATION? *TR.
Additional Summary:

Toyota ID No:
NHTSA ODI No: 10297789
Date of Incident: 20090901
Vehicle: 2004 TOYOTA COROLLA
Location of Incident: DANVERS, MA

NHTSA Summary:
REGARDING SUDDEN ACCELERATION IN THE TOYOTA COROLLA: ALTHOUGH THIS PROBLEM HAS RECENTLY BEEN WIDELY REPORTED ON THE NEWS IN OTHER MODELS I HAVE EXPERIENCED DOZENS OF EVENTS IN THE TOYOTA COROLLA FOR AN ENTIRELY DIFFERENT REASON. THE SPACING BETWEEN THE BRAKE PEDAL AND THE ACCELERATOR IS SO CLOSE THAT ANYONE WHO HAS FEET SUCH AS ME (I WEAR A MEN'S 12 WIDE SHOES) CAN EASILY HIT THE ACCELERATOR AT THE SAME TIME THE BRAKE IS HIT. THIS PROBLEM BECAME SUCH AN ISSUE FOR ME SINCE MY ELDERLY MOTHER OWNS 2 DIFFERENT TOYOTA COROLLA THAT I AVOID USING HER CARS WHENEVER POSSIBLE. HOWEVER, BECAUSE SHE IS 80 OLD AND CANNOT EASILY GET INTO CARS THAT ARE LOW TO THE GROUND BECAUSE OF THEIR SMALL WHEEL DIAMETERS I DO TAKE HER IN HER CAR AT TIMES. THERE IS HARDLY A SINGLE INSTANCE IN WHICH I DRIVE THE CAR THAT I DO NOT EXPERIENCE PROBLEMS. I ALSO TRIED ABOUT 5 YEARS AGO TO BUY MY OWN TOYOTA COROLLA BUT BEING AWARE OF THE PROBLEM I ASKED THE DEALER IF HE COULD MOVE THE BRAKE PEDAL AND HE TOLD ME THERE WAS NOTHING THAT COULD BE DONE. THIS CAR IS VERY DANGEROUS FOR ANYONE WITH FEET LARGER THAN THE NORMAL. I EXPECT THAT IN JAPAN THEY MUST HAVE SMALL FEET FOR CREATING SUCH A STUPID BLUNDER. THIS VEHICLE SHOULD BE REMOVED FROM THE ROAD. I EXPERIENCED THE PROBLEM IN MORE THAN ONE MODEL YEAR. MY MOTHER OWNS TWO DIFFERENT MODEL YEARS. THE CAR I TEST DROVE ON THE DEALERS LOT WAS ANOTHER MODEL YEAR, SO AT LEAST 3 DIFFERENT MODEL YEARS AFTER 2004 HAVE THE PROBLEM. IT CAN EASILY BE SEEN JUST BY LOOKING AT THE PEDAL SPACING. THIS BLUNDER IN DESIGN IS HARD TO BELIEVE SINCE IT IS SO STUPID. *TR
Additional Summary:

Toyota ID No:
NHTSA ODI No: 10298347
Date of Incident: 20090904
Vehicle: 2006 TOYOTA TUNDRA
Location of Incident: STATESVILLE, NC
NHTSA Summary:
TL* THE CONTACT OWNS A 2006 TOYOTA TUNDRA. WHILE DRIVING 5 MPH INTO A PARKING LOT, THE ACCELERATOR PEDAL BECAME STUCK. THE VEHICLE UNCONTROLLABLY ACCELERATED OVER A CURB AND CRASHED INTO A BUILDING. THE CONTACT WAS APPLYING EXTREME PRESSURE TO THE BRAKE PEDAL, HOWEVER, THE VEHICLE WOULD NOT STOP. HE WAS FORCED TO SHIFT GEARS INTO NEUTRAL, REACH DOWN AND PULL THE PEDAL FROM THE FLOOR. THERE WERE NO INJURIES. THE VEHICLE WAS DRIVEN TO THE DEALER AND TESTED; YET, THE DEALER STATED THAT THERE WAS NOTHING WRONG WITH THE VEHICLE. THE DEALER ALSO TESTED THE MICRO CHIP IN THE ENGINE AND IT REGISTERED THERE WERE NO FAILURES. THE FAILURE MILEAGE WAS 29,828.
Additional Summary:

Toyota ID No:
NHTSA ODI No: 10301921
Date of Incident: 20090906
Vehicle: 2007 TOYOTA HIGHLANDER
Location of Incident: GALENA, MO
NHTSA Summary:
TL * THE CONTACT OWNS A 2007 TOYOTA HIGHLANDER. THE CONTACT STATED THAT WHEN ATTEMPTING TO EXIT A PARKING SPACE, THE ALL WEATHER FLOOR MATS THAT HE PURCHASED BY 2007 CAUSED THE ACCELERATOR PEDAL TO STICK, AS A

CONSEQUENCE HE CRASHED INTO SEVERAL TREES. THE VEHICLE WAS COMPLETELY DESTROYED. HE AND THREE OTHER OCCUPANTS WERE INJURED. THE MANUFACTURER AND THE DEALER WERE BOTH NOTIFIED. THE CURRENT AND FAILURE MILEAGES WERE 41,212.
Additional Summary:

Toyota ID No:
NHTSA ODI No: 10289197
Date of Incident: 20090915
Vehicle: 2007 LEXUS RX350
Location of Incident: DAYTON, OH
NHTSA Summary:
2007 LEXUS 350 RX -AT LEAST 3 TIMES IT HAS ENGAGED IN SUDDEN ACCELERATION. THE DEALER TOLD ME THEY COULD FIND NOTHING WRONG. NOW AGAIN IT IS A COMMON OCCURRENCE. PLEASE REGISTER MY NAME TO THOSE HAVING HAD SAFETY PROBLEMS. THERE HAS BEEN NO ACCIDENT (YET). *TR
Additional Summary:

Toyota ID No:
NHTSA ODI No: 10293724
Date of Incident: 20090916
Vehicle: 2006 TOYOTA HIGHLANDER
Location of Incident: FRESH MEADOWS, NY
NHTSA Summary:
I WAS IN A PARKING LOT, MADE A RIGHT TURN TO PULL INTO A PARKING SPACE. I SLOWED DOWN BUT IT SEEMED THE CAR ACCELERATED. IN A MATTER OF SECONDS, THE CAR WENT THROUGH A ROW OF BUSHES AND SLAMMED INTO A TREE. THE ENTIRE FRONT END OF THE CAR HAD TO BE REPLACED. *TR
Additional Summary:

Toyota ID No:
NHTSA ODI No: 10284961
Date of Incident: 20090916
Vehicle: 2010 TOYOTA PRIUS
Location of Incident: IVY HILLS, NY
NHTSA Summary:
ON THREE OCCASIONS, WHILE DRIVING ON CLEAN, DRY ROAD SURFACES, MY 2010 PRIUS SUDDENLY AND BRIEFLY ACCELERATED WITHOUT ANY WARNING AFTER I DROVE OVER MINOR BUMPS AND, ONE OCCASION, A MANHOLE COVER. WHILE BRAKING THE SENSATION WAS THAT OF THE ENGINE SUDDENLY SURGING AND ACCELERATING. I WAS FORTUNATELY ABLE TO APPLY HARDER PRESSURE TO THE BRAKE PEDAL, REGAINED CONTROL OF THE VEHICLE AND AVOIDED CRASHING INTO THE CAR IN FRONT OF ME. I SPOKE WITH A TOYOTA FIELD TECHNICAL SPECIALIST TODAY WHO TOLD ME THAT THE MECHANICS OF THE CAR ARE SUCH THAT IF A WHEEL HITS A BUMP OR MOVES ONTO A SURFACE THAT CAUSES IT TO ROTATE AT A DIFFERENT RATE VERSUS THE OTHER WHEELS, THE CAR THINKS IT IS GOING INTO A SKID, AND THE ABS SYSTEM KICKS IN. ALSO, THE SYSTEM THAT GENERATES ENERGY TO RECHARGE THE BATTERY, WHICH ALSO EFFECTIVELY BRAKES THE CAR, SUDDENLY CEASES TO OPERATE. CONSEQUENTLY, YOU HAVE THE SENSATION OF ACCELERATION WHEN IN FACT, ACCORDING TO THE TOYOTA SPECIALIST, THE CAR STOPPED DECELERATING. NONETHELESS, THIS SUDDEN DECELERATION IS UNEXPECTED, AND IF I WAS NOT FOCUSED AT THOSE EXACT MOMENTS AND FAILED TO IMMEDIATELY APPLY SIGNIFICANT PRESSURE TO THE BRAKE

PEDAL. I COULD HAVE EASILY CRASHED INTO AN OBJECT, OR CAR, OR PERSON. IN FRONT OF ME. I DO NOT FEEL SAFE IN THIS CAR, AND AM WORRIED THAT MY WIFE OR SON COULD HAVE A MAJOR PROBLEM RESPONDING TO THIS SUDDEN LACK OF CONTROL. THERE IS GREAT POTENTIAL FOR SERIOUS INJURY OR DEATH FROM THIS TYPE OF INCIDENT. MY CAR IS ABOUT 1 MONTH OLD, WITH 1,350 MILES ON IT. I UNDERSTAND FROM THE SPECIALIST THAT TOYOTA DEALERSHIPS ON LONG ISLAND HAVE HAD AT LEAST ONE OTHER SIMILAR COMPLAINT. *TR
Additional Summary:

Toyota ID No:
NHTSA ODI No: 10292844
Date of Incident: 20090917
Vehicle: 2002 TOYOTA CAMRY
Location of Incident: RIVERSIDE, CA
NHTSA Summary:
MY WIFE WAS PULLING INTO THE GARAGE AND THE AUTOMOBILE JUST TOOK OFF. LUCKILY SHE WAS STOPPED BY THE END OF THE CARPORT BY CONCRETE STEPS. SECOND, MY WIFE AND GRANDCHILD WHERE AT SHOPPING CENTER, MY WIFE WAS BACKING OUT OF A PARKING SPACE AND THE CAR, AS BEFORE, JUST TOOK OFF AT FULL THROTTLE. THIS TIME SHE WENT INTO A 180 DEGREE SPIN AND STRUCK THREE OTHER AUTOS, WITH EXTENSIVE DAMAGES TO OUR CAT AND OTHERS. WE HAVE TAKEN THE AUTOMOBILE TWO TIMES TO THE DEALER AND THEY SAY THEY FIND NOTHING WRONG. BEING THAT THIS CONDITION HAS HAPPENED TWICE, SO FAR, BOTH MY WIFE AND I ARE VERY CONCERNED AND WOULD LIKE THIS PROBLEM SOLVED. *TR
Additional Summary:

Toyota ID No:
NHTSA ODI No: 10297706
Date of Incident: 20090917
Vehicle: 2004 TOYOTA CAMRY
Location of Incident: HOUSTON, TX
NHTSA Summary:
TL* THE CONTACT OWNS A 2004 TOYOTA CAMRY. SHE STATED THAT WHILE DRIVING NOT MORE THAN 5 MPH THE VEHICLE ACCELERATED ON ITS OWN WHILE HER FOOT WAS ON THE BRAKE PEDAL. THE VEHICLE CRASHED INTO HER GARAGE AND A TREE. THE VEHICLE WAS DESTROYED. THE CONTACT SUSTAINED MINOR INJURIES AFTER SHE HIT THE STEERING WHEEL DURING THE CRASH. SHE WAS TRANSPORTED TO A HOSPITAL. THE AIR BAGS DID NOT DEPLOY. THE DEALER WAS CONTACTED; HOWEVER, THE RECORDING MADE IT IMPOSSIBLE FOR TO SPEAK WITH SOMEONE. NO REPAIRS WERE MADE. THE INSURANCE COMPANY WAS NOTIFIED. THE FAILURE AND CURRENT MILEAGE WERE 45000.
Additional Summary:

Toyota ID No:
NHTSA ODI No: 10292066
Date of Incident: 20090918
Vehicle: 2010 TOYOTA PRIUS
Location of Incident: JAMAICA PLAIN, MA
NHTSA Summary:
MY NEW 2010 PRIUS ACCELERATED ON ITS OWN AS I WAS BRAKING AND SLOWLY APPROACHING THE CAR IN FRONT OF ME THAT WAS STOPPED AT A STOP LIGHT QUITE SOME DISTANCE AWAY. MY CAR HAD ALMOST COME TO A COMPLETE STOP WHEN SUDDENLY THE ENGINE REVVED ON ITS OWN AS MY FOOT WAS STILL ON THE BRAKE. I

HAD TO PRESS DOWN SO HARD ON THE BREAK TO KEEP IT FROM SURGING FORWARD THAT THE ABS LIGHT CAME ON AND THEN THE CARS REV WENT DOWN ON ITS OWN AND ALL WAS BACK TO NORMAL AND HADN'T HAPPENED AGAIN SINCE. I BROUGHT THE CAR TO THE DEALER AND THEY KEPT IT FOR TWO DAYS BUT DIDN'T FIND ANYTHING WRONG WITH IT. I HAVE TWO SMALL CHILDREN AND BOUGHT THIS CAR FOR A NUMBER OF REASONS, SAFETY BEING ONE OF THE IMPORTANT ONES. I AM NO LONGER FEELING SAFE. THIS WAS NOT THE FLOOR MATS, OR A SUDDEN STOP MISTAKING ONE PEDAL FOR ANOTHER, OR ANY OTHER FORM OF DRIVER ERROR. THIS WAS THE CAR! PLEASE HELP TO DISCOVER THE CAUSE AND MAKE TOYOTA FIX IT BEFORE SOMEONE GETS HURT OR KILLED. THANK YOU. CHRIS TOPPIN *TR
Additional Summary:

Toyota ID No:
NHTSA ODI No: 10292225
Date of Incident: 20090919
Vehicle: 2003 TOYOTA CAMRY
Location of Incident: SEORIE, IL
NHTSA Summary:
I WAS SLOWLY PULLING INTO A PARKING SPOT AT THE MALL AND THE CAR SUDDENLY ACCELERATED AND I CRASHED INTO A TREE. THE ENGINE SOUNDED LIKE IT WAS DRIVING 100MPH. I CALLED THE TOYOTA DEALER AND THEY SAID IT WAS PROBABLY DUE TO THE CAR MATS. I DON'T BELIEVE THAT BECAUSE MY MATS WERE IN PLACE AFTER THE CRASH. THERE WAS MAJOR DAMAGE TO THE CAR AND THE TREE.*TR
Additional Summary:

Toyota ID No:
NHTSA ODI No: 10290972
Date of Incident: 20090920
Vehicle: 2007 TOYOTA HIGHLANDER
Location of Incident: DOWNERS GROOVE, IL
NHTSA Summary:
TL* THE CONTACT OWNS A 2007 TOYOTA HIGHLANDER HYBRID. WHEN APPLYING PRESSURE TO THE BRAKE PEDAL, THE ENGINE WOULD INTERMITTENTLY REV, AND THE VEHICLE WOULD NOT DECELERATE. HE SPECULATED THAT THE ENGINE CONTROL SYSTEM FAILED. THE VEHICLE WAS TAKEN TO AN AUTHORIZED DEALER FOR INSPECTION. THE TECHNICIAN STATED THERE WAS NO DIAGNOSTIC TESTING EQUIPMENT AVAILABLE TO DETECT THE MALFUNCTION. THE FAILURE MILEAGE WAS 46,000. THE CURRENT MILEAGE WAS 46,076.
Additional Summary:

Toyota ID No:
NHTSA ODI No: 10286022
Date of Incident: 20090923
Vehicle: 2003 TOYOTA RAV4
Location of Incident: MOUNT PROSPECT, IL
NHTSA Summary:
NHTSA COMPLAINT:
TL* THE CONTACT OWNS A 2003 TOYOTA RAV4. WHILE DRIVING IN REVERSE, THE VEHICLE BEGAN TO HESITATE. THE CONTACT LIGHTLY ENGAGED THE BRAKE PEDAL AND THE VEHICLE CONTINUED TO HESITATE. THE CONTACT ALSO APPLIED PRESSURE TO THE BRAKE PEDAL AND THE VEHICLE ACCELERATED IN REVERSE AT A HIGHER SPEED. THE FAILURE CAUSED THE CONTACT TO CRASH INTO A VEHICLE, A TREE, AND A POLE

WHICH ALSO CAUSED THE PASSENGER SIDE WINDOW TO SHATTER. THE SHATTERED GLASS WAS LODGED IN THE CONTACT'S NOSE AND HE WAS TAKEN TO THE EMERGENCY ROOM. THE CONTACT CANNOT CONFIRM IF THE FLOOR MATS CAUSED THE FAILURE TO OCCUR. THE VEHICLE HAS NOT BEEN INSPECTED TO DETERMINE IF IT WAS DESTROYED. THE CURRENT AND FAILURE MILEAGE WERE 73,000.
Additional Summary:

Toyota ID No:
NHTSA ODI No: 10294497
Date of Incident: 20090925
Vehicle: 2006 TOYOTA COROLLA
Location of Incident: DERRY, NH
NHTSA Summary:
TL* THE CONTACT OWNS A 2006 TOYOTA COROLLA. WHILE ENTERING A PARKING SPACE THE VEHICLE SUDDENLY ACCELERATED WITHOUT INTENTION. CONSEQUENTLY SHE REAR-ENDED ANOTHER VEHICLE, AND THEN STRUCK A TELEPHONE POLE. THE VEHICLE WAS COMPLETELY DESTROYED, AND NONE OF THE AIR BAGS DEPLOYED. A POLICE REPORT WAS FILED. THE VEHICLE WAS TOWED AWAY FROM THE CRASH SITE. THE FAILURE MILEAGE WAS 80,000. UPDATED 12/07/09 *EF UPDATED 12/07/09 *EF
Additional Summary:

Toyota ID No:
NHTSA ODI No: 10290282
Date of Incident: 20090926
Vehicle: 2007 TOYOTA 4RUNNER
Location of Incident: WAYNE, PA
NHTSA Summary:
TL* THE CONTACT OWNS A 2007 TOYOTA 4 RUNNER. WHILE DRIVING AT MPH THE VEHICLE ACCELERATED TO 90 MPH. HE HAD TO DRIVE OVER GRASS AND SMALL SHRUBS TO DECELERATE. THE VEHICLE WAS TOWED TO THE DEALER FOR INSPECTION. THE TECHNICIAN COULD NOT DUPLICATE THE FAILURE, THEREFORE THEY COULD NOT PROVIDE A REMEDY. THE FAILURE AND CURRENT MILEAGES WERE 23,000.
Additional Summary:

Toyota ID No:
NHTSA ODI No: 10285351
Date of Incident: 20090926
Vehicle: 2001 TOYOTA SIENNA
Location of Incident: GLENDALE, AZ
NHTSA Summary:
THANK YOU IN ADVANCE FOR YOUR CONSIDERATION OF THIS COMPLAINT. MY WIFE AND CHILDREN WERE NEARLY INVOLVED IN A SERIOUS ACCIDENT YESTERDAY DUE TO SUDDEN UNCONTROLLED ACCELERATION IN OUR MINIVAN. BEFORE YOU EVEN CONSIDER THAT IT MAY BE DRIVERS ERROR, AS EVIDENCED BY THE MYRIAD OF DISCUSSION ON THIS MATTER ON THE INTERNET, THE PROBLEM WAS CONFIRMED BY THE TOW TRUCK DRIVER AND ME. THE VAN CURRENTLY IS STUCK IN FULL ACCELERATION UPON STARTING---I TESTED THIS NUMEROUS TIMES YESTERDAY AND TODAY. THERE IS NO OBSTRUCTION TO THE THROTTLE CABLE, PEDAL, NOR A FLOOR MAT ISSUE. I HAVE CLEARLY CHECKED THESE ITEMS. THERE ARE NUMEROUS SIMILAR COMPLAINTS ONLINE BUT APPARENTLY THEY HAVE NOT BEEN ACKNOWLEDGED/ADDRESSED BY TOYOTA OR NHTSA. THANKS. *TR
Additional Summary:

Toyota ID No:
NHTSA ODI No: 10293035
Date of Incident: 20090927
Vehicle: 2005 TOYOTA AVALON
Location of Incident: CLARKSTON, MI
NHTSA Summary:
AT 50MPH CAR WILL ACCELERATE APROX. 5MPH, THEN DROP BACK TO 35MPH. UPON EXITING THE FREEWAY, THE CAR WOULD NOT DECELERATE LOWER THAN 40MPH. I APPLIED BRAKES, PUT CAR IN NEUTRAL, AND TURNED ENGINE OFF. UPON RESTARTING, OPERATION RETURNED TO NORMAL. THIS SAME DEFECT HAS OCCURRED TWICE. *TR
Additional Summary:

Toyota ID No:
NHTSA ODI No: 10286055
Date of Incident: 20090927
Vehicle: 2007 LEXUS ES350
Location of Incident: TINLEY PARK, IL
NHTSA Summary:
TL* THE CONTACT OWNS A 2007 LEXUS ES350. THE FLOOR MATS HAVE A TENDENCY TO MAKE CONTACT WITH THE ACCELERATOR PEDAL. THE MALFUNCTION OCCURRED AT A CAR WASH AND THE CONTACT WAS FORCED TO SHUT THE ENGINE OFF AND REMOVE THE FLOOR MATS. THE FAILURE MILEAGE WAS 72,000.
Additional Summary:

Toyota ID No:
NHTSA ODI No: 10285775
Date of Incident: 20090929
Vehicle: 2005 TOYOTA CAMRY SOLARA
Location of Incident: CLINTON, MD
NHTSA Summary:
TL* THE CONTACT OWNS A 2005 TOYOTA SOLARA. THE ALL WEATHER FLOOR MATS INTERFERED WITH THE ACCELERATOR PEDAL. AS A CONSEQUENCE, HER RIBS FOR A VEHICLE CRASH WAS INCREASED. THE DEALER AND THE MANUFACTURER HAVE NOT BEEN NOTIFIED. THE VEHICLE IDENTIFICATION NUMBER WAS UNAVAILABLE. THE FAILURE AND CURRENT MILEAGES WERE 54,000.
Additional Summary:

Toyota ID No:
NHTSA ODI No: 10290297
Date of Incident: 20090930
Vehicle: 2010 TOYOTA PRIUS
Location of Incident: NEWTOWN, PA
NHTSA Summary:
RE: 2010 PRIUS. WHEN BRAKING OVER A POTHOLE, THE CAR SURGED FORWARD SUDDENLY (SUDDEN ACCELERATION DESPITE BRAKING). *TR
Additional Summary:

Toyota ID No:

NHTSA ODI No: 10290810
Date of Incident: 20091001
Vehicle: 2010 TOYOTA PRIUS
Location of Incident: OWINGS MILLS, MD
NHTSA Summary:
I HAVE A 2010 TOYOTA PRIUS AND IT ACCELERATES RANDOMLY. USUALLY WHEN I PUSH ON THE BRAKE A LITTLE BIT, BUT NOT ALL THE WAY, IT WILL JUMP FORWARD AND ACCELERATE. I HEARD ABOUT THE ISSUES WITH THE MAT AND I REMOVED THE MAT MONTHS AGO. ITS IS STILL UNINTENTIONALLY ACCELERATING. IT HAS HAPPENED MAY 6 TIMES SINCE I BOUGHT THE CAR IN JULY. I AM SCARED TO DRIVE IT AND HAVE BEEN DRIVING MY SPARE CAR UNTIL SOMETHING IS DONE BY TOYOTA OR SOMEONE ELSE THAT CARES ABOUT THE SAFETY OF DRIVERS. *TR
Additional Summary:

Toyota ID No:
NHTSA ODI No: 10293725
Date of Incident: 20091006
Vehicle: 2005 TOYOTA 4RUNNER
Location of Incident: LOS ANGELES, CA
NHTSA Summary:
TL*THE CONTACT OWNS A 2005 TOYOTA 4 RUNNER. SHE STATED THAT WHILE MAKING A LEFT TURN INTO A PARKING SPACE, THE VEHICLE SUDDENLY ACCELERATED, LEAPED FORWARD AND CRASHED INTO A BRICK WALL. THE TOYOTA DEALER WAS UNABLE TO DUPLICATE THE FAILURE. THE IDENTICAL FAILURE OCCURRED PREVIOUSLY; HOWEVER, IT DIDN'T RESULT IN A CRASH. NO REPAIRS HAD BEEN MADE TO CORRECT THE FAILURE. THE VIN WAS NOT AVAILABLE. THE CURRENT AND FAILURE MILEAGES WERE UNDER 35,000.
Additional Summary:

Toyota ID No:
NHTSA ODI No: 10290947
Date of Incident: 20091006
Vehicle: 2002 TOYOTA CAMRY
Location of Incident: MIAMI, FL
NHTSA Summary:
I AM WRITING THIS LETTER ON BEHALF OF MY MOTHER. SHE DRIVES A 2002 TOYOTA CAMRY. LAST WEEK SHE INFORMED ME THAT HER CAR -> DID IT AGAIN<-; AND THAT SHE IS AFRAID TO DRIVE THE CAR. WELL, I DIDN'-T FULLY UNDERSTAND WHEN SHE SAID HER CAR WOULD SOMETIMES ACCELERATE IN BURSTS UNTIL I SAW NIGHTLINE LAST NIGHT REGARDING THE TOYOTA RUN-AWAY CAR ISSUE. HERE ARE THE INCIDENCES THAT HAVE HAPPENED TO MY MOM. 1)ON THE MORNING OF SEPTEMBER 3, 2009, SHE WAS BACKING OUT OF HER SPACE AT A SUPERMARKET PARKING LOT AND -> THE CAR BACK OUT REALLY FAST<-. SHE WAS SO AFRAID THAT SHE WAS GOING TO HIT SOMEONE, LUCKILY, NO ONE WAS BEHIND HER SO NO ONE GOT HURT. SHE TRIED APPLYING THE BRAKES TO SO AVAIL AND THEN TRIED MOVING THE GEARS AND EVENTUALLY THE CAR STOPPED. 2)ON SEPTEMBER 20, 2009, SHE WAS BACKING OUT FROM HER HOME AND THE CAR -> TOOK OFF AND WENT BACK REALLY FAST AND THEN SPIN AROUND AND THEN HIT A TREE ACROSS THE STREET<-. IN THE NEIGHBOR-S SWELL. SHE HIT THE BRAKE PEDAL BUT THE CAR DID NOT STOP. SHE THEN TURNED THE IGNITION OFF AND THE CAR EVENTUALLY STOPPED. 3)ON OCTOBER 4, 2009, SHE WAS BACKING OUT FROM GETTING HER HAIR DONE AND -> THE CAR ACCELERATED, TURNED AROUND AND WENT TOWARDS THE HOUSE ACROSS THE STREET AND THEN WENT STRAIGHT INTO THE BACKYARD OF

THE HOUSE--HITTING THE SIDE OF THE HOUSE ALONG THE WAY<-. THE CAR WAS OUT OF CONTROL. THE BRAKES DIDN-<T WORK. THE CAR BROKE DOWN THE CLOTHES LINE. THANK GOD THAT NEITHER SHE, THE PASSENGER, NOR THE OWNER OF THE HOUSE GOT HURT. THE OWNER OF THE HOUSE WAS UNDER A CAR -> FIXING IT IN THE BACKYARD. HAD HE NOT BEEN UNDER THE CAR, SHE FELT SURE THAT THE CAR WOULD HAVE HIT HIM. 4)ON OCTOBER 27, 2009 SHE WAS DRIVING ABOUT 40 MILES PER HOUR WHEN THE CAR -> JUMP TOOK OFF GOING REALLY FAST<-. SHE TOOK HER FEET OFF OF THE GAS PEDAL AND TRIED TO USE THE BRAKES. THAT-> S WHEN SHE TOLD ME THAT SHE WAS SO SCARED AND DIDN-<T WANT TO DRIVE THE VEHICLE ANYMORE. *TR
Additional Summary:

Toyota ID No:
NHTSA ODI No:
Date of Incident: 20091006
Vehicle: 1999 TOYOTA YARIS
Location of Incident:
NHTSA Summary:
UK accident
Additional Summary:

Toyota ID No:
NHTSA ODI No: 10295872
Date of Incident: 20091009
Vehicle: 2003 TOYOTA CAMRY
Location of Incident: MONROE TOWNSHIP, NJ
NHTSA Summary:
TL* THE CONTACT OWNS A 2003 TOYOTA CAMRY. WHILE EXITING A PARKING LOT, THE VEHICLE BEGAN TO ACCELERATE WITHOUT INTENTION. AFTER REPEATED BRAKE APPLICATION THE VEHICLE WOULD NOT STOP. CONSEQUENTLY HE CRASHED THROUGH A FENCE AND THEN INTO A BUILDING. THE AIR BAGS DID DEPLOY. HOWEVER HE AND HIS WIFE WERE INJURED (HIS WIFE HAD A FRACTURED VERTEBRAE AND OTHER ISSUES) AS A RESULT OF THE FAILURE. A POLICE REPORT WAS TAKEN. THE VEHICLE WAS COMPLETELY DESTROYED. THE MANUFACTURER WAS NOTIFIED, AND REPRESENTATIVE WAS SENT TO INSPECT THE BRAKES. THE CURRENT AND FAILURE MILEAGES WERE APPROXIMATELY 25,000.
Additional Summary:

Toyota ID No:
NHTSA ODI No: 10299770
Date of Incident: 20091010
Vehicle: 2003 TOYOTA AVALON
Location of Incident: RALEIGH, NC
NHTSA Summary:
CAR ACCELERATES ON ITS OWN. THERE ARE NO FLOOR MATS IN DRIVER SIDE OF CAR. HAPPENED A TOTAL OF THREE TIMES SINCE 2005. MILAGE ON FIRST OCCURANCE ABOUT 30000 ON LAST OCCURANCE 78000.
Additional Summary:

Toyota ID No:
NHTSA ODI No: 10299898

Date of Incident: 20091012
Vehicle: 2002 TOYOTA CAMRY SOLARA
Location of Incident: SENKSBURG, MD
NHTSA Summary:
TL*THE CONTACT OWNS A 2002 TOYOTA CAMRY SOLARA. THE FLOOR-MATS ARE SHIFTING UNDER THE ACCELERATOR PEDAL. THE MATS WERE EXCHANGED TWICE. THE DEALER WAS NOTIFIED, AND A TECHNICIAN ADVISED HER TO REMOVE THE DRIVER-SIDE FLOOR-MAT. HER VEHICLE WAS NOT INCLUDED IN THE TOYOTA FLOOR-MAT RECALL. THE FAILURE MILEAGE WAS 178,752.
Additional Summary:

Toyota ID No:
NHTSA ODI No: 10294241
Date of Incident: 20091012
Vehicle: 2005 TOYOTA MATRIX
Location of Incident: WOODBRIDGE, VA
NHTSA Summary:
WHILE DRIVING MY 2005 TOYOTA MATRIX WITH 60,000 MILES, I WAS PULLING INTO A PARKING SPACE, CAR WAS NOT EVEN GOING 1 MILE AN HOUR, HAD TAKEN MY FOOT OFF OF THE GAS PEDAL, DID NOT EVEN HAVE A CHANCE TO PUT MY FOOT ON THE BRAKES, WHEN THE CAR SUDDENLY ACCELERATED, MADE A NOISE, JUMPED THE CURB AND SMASHED INTO A BUILDING. THE CAR HAD $3,000 WORTH IN DAMAGES LEAVING A CRACK IN THE BRICK WALL OF THE BUILDING CAUSING STRUCTURAL DAMAGE. THE SUDDEN, UNINTENTIED ACCELERATION HAD NOTHING TO DO WITH THE FLOOR MAT. NOTHING HAS BEEN DONE TO CORRECT THE FAILURE OR TOYOTA WOULD NOT ADDRESS THE ISSUE AT ALL, SAYING THAT THE MATRIX WAS NOT PART OF THE RECALL. TOYOTA HAS NOT ACCOMMODATED ME AT ALL WITH THIS INCIDENT. I AM TERRIFIED WHEN I DRIVE NOW THAT IT WILL HAPPEN AGAIN, NOT TO MENTION THE WORTH OF THE CAR BEGAINE OF THE ACCIDENT. DUE TO THIS I AM LOOKING FOR ANOTHER VEHICLE. *TR
Additional Summary:

Toyota ID No:
NHTSA ODI No: 10291212
Date of Incident: 20091013
Vehicle: 2010 TOYOTA PRIUS
Location of Incident: FORT WORTH, TX
NHTSA Summary:
I BOUGHT A 2010 PRIUS IN SEPTEMBER 2009. IN OCTOBER, I DROVE OVER A POTHOLE THAT WAS ABOUT 6 INCHES DEEP AND COVERED THE ENTIRE WIDTH OF THE LANE. HERE IS WHAT IT FELT LIKE HAPPENED: WHEN THE BACK WHEELS HIT THE BOTTOM OR THE TOP OF THE POTHOLE, MY CAR SUDDENLY ACCELERATED AND I HAD A VERY DIFFICULT TIME STOPPING IT. I MANAGED TO NOT CRASH INTO THE CAR IN FRONT OF ME, BUT JUST BARELY. IT HASN'T HAPPENED SINCE. THE POTHOLE WAS APPARENTLY THE RESULT OF WORK ON THE ROAD, BUT IT WAS SQUARED, LIKE THE PAVEMENT HAD BEEN INTENTIONALLY CUT. *TR
Additional Summary:

Toyota ID No:
NHTSA ODI No: 10291666
Date of Incident: 20091016
Vehicle: 2005 TOYOTA CAMRY
Location of Incident: OAKDALE, CA

NHTSA Summary:
HI. I HAVE A 2005 TOYOTA CAMRY. I READ A RECENT ARTICLE REGARDING THE LEXUS AND TOYOTA HAVING UNEXPECTED ACCELERATION. THIS HAS HAPPENED TO ME 3 TIMES IN THE LAST 18 MO. THE FIRST COUPLE OF TIMES I WAS COMING TO A STOP AT A STOP SIGN AND AT A RED LIGHT. I WAS APPLYING MY BRAKES AND THE CAR SUDDENLY ACCELERATED FOR A COUPLE OF SECONDS. I HAD TO PUT A LOT MORE PRESSURE ON THE BRAKES TO STOP. THE THIRD INCIDENT HAPPENED IN A PARKING LOT. I PULLED IN THE LOT BEHIND ANOTHER CAR AND WAS APPLYING THE BRAKES. I WAS STOPPED WITH THE BRAKES APPLIED AND SUDDENLY THE CAR ACCELERATED. LUCKILY I STILL HAD MY FOOT ON THE BRAKES OTHERWISE I WOULD HAVE HIT THE CAR IN FRONT OF ME. I DID, HOWEVER BURN RUBBER AS THE TIRES SPUN WHILE I HAD TO PRESS DOWN HARD ON THE BRAKES. I TOOK IT IN TO MY MECHANIC. THEY CALLED A TOYOTA DEALERSHIP IN MODESTO, CA TO SEE IF THERE WAS A RECALL FOR THIS PROBLEM OR IF THEY HAD HEARD OF A SIMILAR TYPE PROBLEM. THEY SAID THERE WAS NO RECALL FOR THIS PROBLEM AND WERE NOT AWARE OF OTHER INCIDENTS. TO ME THIS WAS A VERY SCARY SITUATION. WHEN YOU APPLY THE BRAKES YOU WOULD EXPECT TO STOP, NOT HAVE THE CAR ACCELERATE. THIS COULD VERY EASILY RESULT IN A CRASH. *TR
Additional Summary:

Toyota ID No:
NHTSA ODI No: 10292918
Date of Incident: 20091017
Vehicle: 2007 TOYOTA SIENNA
Location of Incident: RUSSELL, PA
NHTSA Summary:
ON OCTOBER 17TH, 2009, WHILE PULLING INTO THE PARKING LOT OF MCDONALDS, MY VAN SUDDEN ACCELERATED AS I ENTERED THE PARKING SPACE. THE MOTOR WAS ROARING. I WOULD HAVE BEEN TURNING INTO MY SPACE, MY FOOT WOULD HAVE BEEN OVER THE BRACE AND I MAY HAVE STARTED TO PRESS THE BRAKE. WHEN THE VEHICLE SURGED FORWARD, THINKING MY FOOT WAS ON THE GAS, I IMMEDIATELY MOVED IT FURTHER TO THE LEFT AND PRESSED THE BRAKE TO THE FLOOR. I REMEMBER THINKING THIS THING DIDN'T SLOWING DOWN ONE BIT NOR WAS IT STOPPING. IT FELT POSSESSED. IT SLAMMED INTO A HEAVY DUTY VAN, JOLTING IT HARD AND DOING CONSIDERABLE DAMAGE TO OUR VAN. I DID TELL THE OFFICER AT THE SCENE THAT I MUST HAVE HAD MY FOOT ON THE GAS. IT WAS THE ONLY THING THAT MADE LOGICAL SENSE TO ME AT THE TIME. IN REPLAYING THE EVENTS IN MY MIND, I WAS SURE MY FOOT WAS OVER THE BRAKE, AND THAT I DIDN'T PRESS ANYTHING HARD UNTIL AFTER THE VEHICLE ACCELERATED, AFTER I MOVED MY FOOT FURTHER TO THE LEFT. I HAVE SINCE AMENDED MY REPORT WITH THE OFFICER AT THE SCENE AND MY INSURANCE COMPANY. THE FRONT-END DAMAGE ON THE VAN HAS BEEN REPAIRED. ON NOVEMBER 17TH A TECHNICAL SPECIALIST FROM TOYOTA WENT OVER THE VAN. THEY RELEASED THE VAN BACK TO US WITHOUT TELLING US ANYTHING. MY PAST HISTORY WILL SHOW I AM A SAFE DRIVER AND I DO NOT PANIC EASILY. *TR
Additional Summary:

Toyota ID No:
NHTSA ODI No: 10293557
Date of Incident: 20091018
Vehicle: 2004 TOYOTA RAV4
Location of Incident: TUCSON, AZ
NHTSA Summary:

TL* THE CONTACT OWNS A 2004 TOYOTA RAV4. WHILE DRIVING 35 MPH HIS VEHICLE ACCELERATED TO A HIGH SPEED, AND WOULD NOT DECELERATE. CONSEQUENTLY HE CRASHED INTO A POLE. SHE SUSTAINED MULTIPLE INJURIES AND WAS HOSPITALIZED. THE POLICE WERE STILL CONDUCTING AN INVESTIGATION, AND A REPORT WILL BE AVAILABLE IF NECESSARY. THE VEHICLE WAS TOWED TO AN IMPOUND. THE TOYOTA MANUFACTURER WAS NOT CALLED. THE FAILURE MILEAGE WAS 80,000.
Additional Summary:

Toyota ID No:
NHTSA ODI No: 10290097
Date of Incident: 20091008
Vehicle: 2008 TOYOTA TUNDRA
Location of Incident: PRESCOTT, AZ
NHTSA Summary:
I AM FILING THIS COMPLAINT WITH REFERENCE TO ODI #s 10185308 AND 10288886. THESE ODI'S WERE PUT IN BY ME. THESE ARE LEAD UPS TO THIS COMPLAINT. AFTER THE COLLISION WITH THE POLARIS I DROVE MY VEHICLE HOME. THE NEXT DAY I DROVE THE VEHICLE TO TIM'S TOYOTA IN PRESCOTT AZ. WHERE THE VEHICLE WAS PURCHASED. THEY LOOKED AT THE VEHICLE AND SAID THAT THEY WOULD CALL FOR A FACTORY REP. TO LOOK AT MY VEHICLE. THIS WAS TO BE ON NOV. 9, 2009. I DID DRIVE MY VEHICLE TO YARNELL AZ FOR DEER SEASON. I DROVE THE VEHICLE BACK TO PRESCOTT TO MEET WITH THE FACTORY REP. HE DID WHATEVER THEY DO AND SAID HE HAD ALL THE INFORMATION HE NEEDED. HE ALSO TOLD ME TO GO AHEAD AND GET AN ESTIMATE FOR THE REPAIRS BUT NOT TO HAVE IT REPAIRED UNTIL I HEARD FROM TOYOTA. THE PRELIMINARY ESTIMATE IS JUST SHY OF $2000.00. THIS ESTIMATE WAS GIVEN TO JEFF LOCKE TO BE SENT TO TOYOTA. MY QUESTION TO ALL OF THIS IS, WHY DID TOYOTA ALLOW ME TO DRIVE THIS VEHICLE AFTER THE MEETING, WHEN THEY KNOW THAT I AM DRIVING A TIME BOMB. ALSO WHY HASN'T NATIONAL HIGHWAY SAFETY INVOLVED ITSELF INTO AN INVESTIGATION OF ITS OWN? I NOW KNOW THE VERBIAGE FOR THE INCIDENT. IT IS CALLED " SUDDEN UNINTENDED ACCELERATION" WHICH IS TIED TOGETHER WITH THE CRUISE CONTROL, THROTTLE BODY AND OTHER ELECTRICAL, VACUUM CONTROLLED , MECHANICAL UNITS. LOOK IT UP FOR YOURSELVES. IT WILL OPEN YOUR EYES TO WHAT IS GOING ON WITH THIS CONDITION. MY VEHICLE SITS IN MY GARAGE SO ANYTIME NATIONAL HIGHWAY SAFETY WANTS TO DO AN INVESTIGATION IS FINE WITH ME. TOYOTA HAS NOT DONE A PROPER EVALUATION OF THE ISSUE. MY INSURANCE COMPANY IS BEHIND ME 100% AND IS NOW GOING TO CONTACT TOYOTA TO TRY TO FIND THE CAUSE FOR "SUDDEN ACCELERATION" AND CRUISE CONTROL UNITS TO BEHAVE THE WAY THAT THEY ARE. RACING TO OVER 5000 RPM'S AND HUNTING GEARS THE WAY THEY DO IS JUST NOT THE WAY THEY ARE SUPPOSED TO OPERATE. TOYOTA WOULD HAVE US BELIEVE THAT A FLOOR MAT IS AT FAULT AND NOW THE WHOLE PEDAL ASSEMBLY OR IS IT THAT WE DON'T KNOW THE GAS FROM THE BRAKE PEDAL?
Additional Summary:

Toyota ID No:
NHTSA ODI No: 10284824
Date of Incident: 20091009
Vehicle: 2005 TOYOTA SIENNA
Location of Incident: MT. PROSPECT, IL
NHTSA Summary:
TL- THE CONTACT OWNS A 2005 TOYOTA SIENNA. HE STATES THAT COMING TO A STOP WITH HIS FOOT ON THE BRAKES, WITHOUT A WARNING THE VEHICLE MOVED FORWARD AND HIT SOME BUSHES, AND WENT TO A DRIVEWAY AND THEN WAS ABLE TO TURN AND HIT A BOULDER TO STOP THE VEHICLE. THE VEHICLE WAS THEN DRIVEN TO A TOYOTA

DEALER WHERE THEY REPAIRED THE BODY THAT WAS DAMAGED TO THE FRONT BUMPER. CONTACT TOLD THEM ABOUT THE ACCELERATION PROBLEM. THEY TOLD HIM THAT THERE WAS NOTHING WRONG WITH THE VEHICLE AND THAT THE VEHICLE WAS NOT INCLUDED IN THE RECENT TOYOTA RECALL FLOOR MATS RECALL. THEY ALSO SAID THAT THE PETAL PROBABLY GOT STUCK. THERE IS A POLICE REPORT. THE FAILURE MILEAGE WAS 52000 AND CURRENT MILEAGE WAS 55000.
Additional Summary:

Toyota ID No:
NHTSA ODI No: 10291054
Date of Incident: 20091021
Vehicle: 2006 TOYOTA CAMRY
Location of Incident: BREMERTON, WA
NHTSA Summary:
TL* THE CONTACT OWNS A 2006 TOYOTA CAMRY. WHILE ATTEMPTING TO STOP, THE VEHICLE CONTINUED TO ACCELERATE. CONSEQUENTLY SHE REAR-ENDED ANOTHER VEHICLE. THE BUMPER AND THE HOOD OF THE VEHICLE WERE DAMAGED. THE DEALER STATED THAT SINCE THE INSURANCE COMPANY PROVIDED HER WITH ASSISTANCE, THEY WOULD ONLY DOCUMENT THE FAILURE. THE INSURANCE COMPANY COULD NOT IDENTIFY THE CAUSE OF THE FAILURE. THE FAILURE MILEAGE WAS 47000. THE CURRENT MILEAGE WAS 47002.
Additional Summary:

Toyota ID No:
NHTSA ODI No: 10291202
Date of Incident: 20091021
Vehicle: 2003 TOYOTA COROLLA
Location of Incident: ROCKVILLE, MD
NHTSA Summary:
TL* THE CONTACT OWNS A 2003 TOYOTA COROLLA. WHILE MAKING A U-TURN, HER VEHICLE SUDDENLY ACCELERATED TO OVER 100 MPH. AS A CONSEQUENCE SHE CRASHED INTO A DUMP TRUCK, AND THEN INTO A POLE. TWO OCCUPANTS RECEIVE MINOR INJURIES. THERE WAS A POLICE REPORT TAKEN AT THE SCENE OF THE INCIDENT. THE VEHICLE WAS COMPLETELY DESTROYED. SHE HAD NOT CONTACTED THE DEALERSHIP OR THE MANUFACTURER TO DATE. THE CURRENT AND FAILURE MILEAGES WERE APPROXIMATELY 97,000.
Additional Summary:

Toyota ID No:
NHTSA ODI No: 10295387
Date of Incident: 20091021
Vehicle: 2005 TOYOTA HIGHLANDER
Location of Incident: MURRAETA, CA
NHTSA Summary:
TL* THE CONTACT OWNS A 2005 TOYOTA HIGHLANDER HYBRID. WHILE APPROACHING A RED LIGHT, THE VEHICLE ACCELERATED TWICE BEFORE COMING TO A COMPLETE STOP. THE VEHICLE WAS TAKEN TO A DEALER BUT THE ISSUE HAS NOT BEEN REMEDIED. THE VEHICLE WAS NOT INCLUDED IN THE FLOOR MAT RECALL #09V398000. THE CONTACT IS AWARE OF THE SAFETY RISK SINCE HE COULD HAVE INJURED SOMEONE. THE FAILURE MILEAGE WAS 85,000.
Additional Summary:

Toyota ID No:
NHTSA ODI No: 10290157
Date of Incident: 20091022
Vehicle: 2002 TOYOTA CAMRY
Location of Incident: KANKAKEE, IL
NHTSA Summary:
TL*THE CONTACT OWNS A 2002 TOYOTA CAMRY. ON OCTOBER 22, 2009 SHE ATTEMPTED TO DRIVE OUT OF A PARKING SPACE AND SUDDENLY THE VEHICLE ACCELERATED AND CAUSED HER TO CRASH INTO TWO PARKED VEHICLES. SHE WAS FORCED TO CRASH INTO THE PARKED VEHICLES OR A WALL IN ORDER TO BRING THE VEHICLE TO A STOP TO AND AVOID A TRAGEDY. THE DRIVER AND PASSENGER SUSTAINED INJURIES. THE VEHICLE WAS TOWED TO THE DEALER. THE DEALER STATED THAT THE SUDDEN ACCELERATION WAS DUE TO THE FLOOR MAT; HOWEVER, THE HOOKS ON THE FLOOR MAT HAVE AN ADDITIONAL COVER AND WAS NOT TOUCHING THE ACCELERATOR PEDAL. THE AIR BAG DID NOT DEPLOY WHEN SHE CRASHED INTO THE THIRD VEHICLE. THE DEALER STATED THE AIR BAG SENSOR IS LOCATED IN THE MIDDLE AND THAT THE CRASH OCCURRED ON THE RIGHT SIDE OF THE VEHICLE WHICH IS WHY THE AIR BAG DID NOT DEPLOY. THE HONOLULU POLICE REPORT NUMBER 09-000000. THE VEHICLE WILL BE REPAIRED. THE FAILURE AND CURRENT MILEAGE WERE 39,000.
Additional Summary:

Toyota ID No:
NHTSA ODI No:
Date of Incident: 20091023
Vehicle: 2009 LEXUS RX 350
Location of Incident: VALPARAISO, IN
NHTSA Summary:
Additional Summary:
UNINTENTIONAL ACCELERATION/MVA -NO INJURIES. Carolyn was backing out of a friend's driveway. She felt the engine start to rev up while it was still in neutral. She thought it was odd but the put the car in reverse to leave. The car took off down the driveway, across the street, into the neighbor's yard and up a hill into an oak tree. She was not injured but her car, a 2009 Lexus 350 SUV, was totaled. NOTE - MR. ALYS SAID THE POLICE OFFICER DID NOT BELIEVE HER ACCOUNT OF WHAT HAPPENED

Toyota ID No:
NHTSA ODI No: 10290794
Date of Incident: 20091024
Vehicle: 2006 TOYOTA MATRIX
Location of Incident: ALBUQUERQUE, NM
NHTSA Summary:
ON THREE SEPARATE OCCASIONS OUR 2006 TOYOTA MATRIX HAS ACCELERATED ON ITS OWN WITHOUT WARNING ON ALL THREE OCCASIONS WE HAVE BEEN ABLE TO SLIP THE TRANSMISSION OUT OF DRIVE INTO NEUTRAL OR SLAM THE BRAKES ON TO STOP THE ACCELERATION. THE MOST RECENT TIME THIS OCCURRED WAS LAST WEEKEND. THE MOST PREVIOUS WAS THREE MONTHS AGO. *TB

Toyota ID No:
NHTSA ODI No: 10290959
Date of Incident: 20091026

Vehicle: 2000 LEXUS GS300
Location of Incident: LOS ANGELES, CA
NHTSA Summary:
UNINTENDED ACCELERATION WITHOUT PRESSING ACCELERATOR. HAS OCCURRED PREVIOUSLY. CAR IS A 2000 LEXUS GS 300 WITH 107,000 MILES. FLOOR MATS WERE NOT THE CAUSE. PUT CAR IN NEUTRAL, IT RACED TO RED LINE AND WENT BACK TO IDLE. *TB
Additional Summary:

Toyota ID No:
NHTSA ODI No: 10294024
Date of Incident: 20091028
Vehicle: 2007 TOYOTA MATRIX
Location of Incident: SANTA FE, NM
NHTSA Summary:
TL* THE CONTACT OWNS A 2007 TOYOTA MATRIX. WHILE DRIVING BETWEEN 25 MPH AND 40 MPH THE POWER STEERING WOULD FAIL. ALSO THE ACCELERATOR PEDAL REMAINS APPLIED, EVEN AFTER APPLICATION. THE VEHICLE WAS TAKEN TO THE DEALER, BUT THE TECHNICIAN WAS UNABLE TO REMEDY THE FAILURE. THE REGIONAL MASTER TECH SENT BY THE MANUFACTURER COULD NOT LOCATE THE CAUSE OF THE FAILURE. THE MANUFACTURER WAS CONTACTED AGAIN, BUT NO ASSISTANCE WAS PROVIDED. THE CURRENT MILEAGE WAS 26,000. THE FAILURE MILEAGE WAS 2,000.
Additional Summary:

Toyota ID No:
NHTSA ODI No: 10296586
Date of Incident: 20091028
Vehicle: 2002 TOYOTA RAV4
Location of Incident: AUBURN, CA
NHTSA Summary:
TL* THE CONTACT OWNS A 2002 TOYOTA RAV4. WHILE SHIFTING THE VEHICLE IN DRIVE THE VEHICLE WOULD NOT ACCELERATE PAST 4 MPH. THEN WITHOUT WARNING THE VEHICLE BEGAN TO RAPIDLY ACCELERATE. EVENTUALLY HE WAS ABLE TO GAIN CONTROL OF THE VEHICLE. THE VEHICLE WAS THEN TAKEN TO THE TOYOTA DEALER AND THE TECHNICIAN STATED THAT THE COMPUTER WAS OVERRIDING THE TRANSMISSION. A NEW COMPUTER WAS INSTALLED IN THE VEHICLE. ALL THE REPAIRS HAVE BEEN DONE UNDER THE OWNER'S EXPENSE. THE FAILURE HAS BEEN REPORTED TO THE OFFICE OF CONSUMER'S AFFAIRS AND TO TOYOTA. THE FAILURE MILEAGE WAS 111000. THE CURRENT MILEAGE WAS 111400.
Additional Summary:

Toyota ID No:
NHTSA ODI No: 10295509
Date of Incident: 20091028
Vehicle: 2006 TOYOTA CAMRY
Location of Incident: INDIAN VALLEY, VA
NHTSA Summary:
CAR WAS EXITING A MEDIUM RIGHT TURN WHEN THE CAR ACCELERATED RAPIDLY. WENT THRU A FENCE AND HIT A TREE. *TR
Additional Summary:

Toyota ID No:

NHTSA ODI No: 10291762
Date of Incident: 20091019
Vehicle: 2002 TOYOTA CAMRY
Location of Incident: COLUMBUS, NJ
NHTSA Summary:
TL* THE CONTACT OWNS A 2002 TOYOTA CAMRY. WHILE IN TRAFFIC, THE VEHICLE SUDDENLY ACCELERATED INTO ANOTHER VEHICLE. THE VEHICLE WAS TAKEN TO THE DEALER FOR INSPECTION. SINCE THE TECHNICIANS COULD NOT IDENTIFY THE CAUSE OF THE FAILURE, NO REPAIRS WERE MADE. HE TRADED THE VEHICLE. THE FAILURE AND CURRENT MILEAGES WERE 47,000.
Additional Summary:

Toyota ID No: 10292012
Date of Incident: 20091010
Vehicle: 2002 TOYOTA AVALON
Location of Incident: VITCON, OR
NHTSA Summary:
TOYOTA AVALON '02 ACCELERATED AND HAD NO BRAKES GOING DOWN 25-40' DRIVEWAY. WOULD KNOCK PARKED CAR THROUGH HOUSE IF I DID NOT TURN. STEERED INTO RAILROAD TIE HOLDING BERM. BOUNCING OFF THE TIE SLOWED MOMENTUM OF CAR. WAS ABLE TO TURN. STILL CRASHED INTO PARKED CAR. TOTALED MY CAR AND PARKED CAR. *TR
Additional Summary:

Toyota ID No:
NHTSA ODI No: 10291750
Date of Incident: 20091010
Vehicle: 2006 TOYOTA CAMRY
Location of Incident: MELVILLE, NY
NHTSA Summary:
TL* THE CONTACT OWNS A 2006 TOYOTA CAMRY. WHILE ATTEMPTING TO PARK, THE VEHICLE SUDDENLY ACCELERATED. THE VEHICLE STRUCK A CEMENT BOULDER, AND THEN CRASHED INTO A PARKED VEHICLE. THE VEHICLE THEN SPUN AROUND SEVERAL TIMES AND BECAME LODGED BETWEEN A TREE AND A POLE. A POLICE REPORT WAS FILED. THE VEHICLE WAS REPAIRED SHORTLY THEREAFTER AT THE OWNER'S EXPENSE. THE FAILURE MILEAGE WAS 3,150. THE CURRENT MILEAGE WAS 3,550.
Additional Summary:

Toyota ID No:
NHTSA ODI No:
Date of Incident: 20091100
Vehicle: 2004 PONTIAC VIBE
Location of Incident: -
NHTSA Summary:
Additional Summary:
Pontiac vibe spontaneous acceleration We have been following with interest spontaneous acceleration in Toyota vehicles with interest since we have had over 2 incidences of sudden acceleration in our 2004 Pontiac vibe. Which is a joint venture between toyota and GM. The first incident was in 2004 and then 2 weeks ago. Fortunately neither incident caused any damage or injury but very easily could have. We brought the vehicle in and the dealer could find nothing wrong and GM won't do anything until it happens again and then only if they can duplicate it. We aren't willing to drive it nor are we willing to trade it off

an someone who will admit a car that has this problem. can you tell us if Pontiac Vibe is part of your investigation or who we should be in contact with to deal with this issue. Thanks

---

Toyota ID No:
NHTSA ODI No: 10296552
Date of Incident: 20091101
Vehicle: 2002 TOYOTA CAMRY
Location of Incident: PLYMOUTH, MN
NHTSA Summary:
TL* THE CONTACT OWNS A 2002 TOYOTA CAMRY. WHILE ENTERING A PARKING SPACE, THE VEHICLE SUDDENLY ACCELERATED OVER AN EMBANKMENT, AND THEN INTO A CEMENT WALL. THE DRIVER RECEIVED INJURIES TO THE LOWER PART OF THE BODY. THE INSURANCE COMPANY TOOK THE VEHICLE TO THE BODY SHOP. THE INSURANCE COMPANY ALSO INVESTIGATED THE ACCELERATION, AND CONCLUDED THAT NOTHING WAS WRONG WITH THE VEHICLE. HOWEVER, TWO YEARS PRIOR THE VEHICLE SUDDENLY ACCELERATED SEVERAL TIMES. WHEN THE FAILURE OCCURRED HE WAS ABLE TO REGAIN VEHICLE CONTROL. THE FAILURE MILEAGE WAS 55,000. THE CURRENT MILEAGE WAS 60,000.
Additional Summary:

Toyota ID No:
NHTSA ODI No: 10291079
Date of Incident: 20091102
Vehicle: 2007 TOYOTA COROLLA
Location of Incident: SPRINGFIELD, MO
NHTSA Summary:
IN AUGUST 2009 THE COMPUTER WAS REPLACED ON MY 2007 TOYOTA COROLLA BECAUSE IT DIED IN THE MIDDLE OF THE INTERSECTION. SINCE THAT TIME, MY CAR WILL SUDDENLY REV UP AND ACCELERATE ON ITS OWN. I TOOK IT TO THE DEALER SERVICE CENTER A FEW WEEKS AGO AND AFTER HAVING IT FOR A WEEK, RETURNED IT TO ME AND STATED NOTHING WAS WRONG ON NOVEMBER 2ND, MY CAR SUDDENLY ACCELERATED PULLING INTO MY DRIVEWAY AND I HAD TO KNOCK IT OUT OF GEAR AND STAND UP ON THE BRAKE TO GET IT TO STOP. I CALLED THE DEALER AND HE RAID TO CALL TOYOTA (THAT HE WOULD NOT DO ANYTHING WITH THE CAR. I HAVE A CAR IN MY GARAGE THAT I CANNOT DRIVE FOR SAFETY REASONS. NO HELP FROM TOYOTA. AND I WILL NEVER DRIVE IT AGAIN AS I HAVE HAD RE-OCCURRING NIGHTMARES BECAUSE OF THIS INCIDENT AS MY TWINS WERE PLAYING IN THE DRIVEWAY AND I HAD JUST PARKED MY SON ON HIS TRICYCLE AND STOPPED AND PUT MY DAUGHTER ON MY LAP TO PULL INTO THE GARAGE WHEN THIS HAPPENED. I HAVE ASKED FOR A FULL REFUND ON THE CAR AND TONY STURBLEFIELD WITH MIDABLE TOYOTA IN SPRINGFIELD MO SAID THAT THE BEST ME COULD DO WAS ALLOW ME TO TRADE IT IN THERE. THIS DID HAPPEN TO ME. I HAVE NEVER IN MY LIFE FILED A LAW SUIT, AND I WOULD LIKE THIS CAR TAKEN AWAY AND THE SITUATION RECTIFIED OR I WILL BE LEFT WITH NO OTHER ALTERNATIVE BUT TO SEEK THE SERVICES OF AN ATTORNEY. THIS STRESS IS CAUSING ME HEALTH ISSUES. *TR
Additional Summary:

Toyota ID No:
NHTSA ODI No: 10290959
Date of Incident: 20091103
Vehicle: 2007 TOYOTA HIGHLANDER
Location of Incident: STONEHAM, MA

NHTSA Summary:
TL* THE CONTACT OWNS A 2007 TOYOTA HIGHLANDER. WHILE HE WAS ATTEMPTING TO APPLY THE BRAKES AT 5 MPH THE PEDAL FELL TO THE FLOOR. THE VEHICLE LURCHED FORWARD OVER A STONE LEDGE. THE VEHICLE WAS TAKEN TO THE DEALERSHIP. BUT THE TECHNICIANS COULD NOT DUPLICATE THE FAILURE, THEREFORE THEY COULD NOT PROVIDE A REMEDY. THE CURRENT AND FAILURE MILEAGES WERE 18000.
Additional Summary:

Toyota ID No:
NHTSA ODI No: 10291193
Date of Incident: 20091104
Vehicle: 2010 TOYOTA PRIUS
Location of Incident: CHICAGO, IL
NHTSA Summary:
2010 TOYOTA PRIUS ACCELERATES SLIGHTLY WHEN BRAKE IS COMPRESSED AND CAR IS TRAVELING OVER LARGE ROAD BUMPS OR MANHOLE COVERS/SUPERBLY SURFACES (MULTIPLE TIMES EACH TIME I DRIVE). I HAVE NOT YET REPORTED THIS TO TOYOTA, BASED ON THE ONLINE AND NEWS-BROADCAST ACCOUNTS OF HOW TOYOTA HAS RESPONDED TO MUCH MORE SERIOUS ACCELERATION ISSUES. I INTEND TO ATTEMPT RETURNING THE VEHICLE TO THE COMPANY FOR A FULL REFUND. *TR
Additional Summary:

Toyota ID No:
NHTSA ODI No: 10291962
Date of Incident: 20091106
Vehicle: 2005 LEXUS RX330
Location of Incident: LOUISVILLE, KY
NHTSA Summary:
TL* THE CONTACT OWNS A 2005 LEXUS RX330. WHILE ENTERING A PARKING SPACE SHE APPLIED PRESSURE TO THE BRAKE PEDAL, AND THEN THE VEHICLE ACCELERATED WITHOUT INTENTION. CONSEQUENTLY, THE VEHICLE CRASHED INTO A BUILDING. A POLICE REPORT WAS FILED. THE VEHICLE WAS TOWED TO A COLLISION CENTER. THE FRONT END OF THE VEHICLE RECEIVED $8,000 WORTH OF DAMAGE. THE FAILURE AND CURRENT MILEAGES WERE 22,000.
Additional Summary:

Toyota ID No:
NHTSA ODI No: 10292146
Date of Incident: 20091109
Vehicle: 2006 SCION XA
Location of Incident: EL PASO, TX
NHTSA Summary:
SUDDEN ACCELERATION INCIDENT. FIRST TIME IT HAPPENED: 2006 SCION XA, DRIVING BACK FROM N.M. ON I-25, GOING APPROX. 45 MPH. WAS PASSING CAR ON RIGHT WHEN CAME TO A HILL. HAD TO ACCELERATE. SUDDENLY CAR ENGINE REVVED UP, MADE A LOUD NOISE AND RAPIDLY ACCELERATED. I COULDN'T SLOW IT DOWN BECAUSE THE BRAKES WOULDN'T WORK. I MANAGED TO GET AROUND THE CAR AND TRIED TO SLOW DOWN THE CAR SO THAT I COULD GET OFF ON THE RIGHT SHOULDER AND STOP THE CAR. SOMEHOW MANAGED TO SLOW THE CAR ENOUGH (I'M NOT SURE HOW BECAUSE THE BRAKES WOULDN'T WORK) TO GET OFF ON THE RIGHT SHOULDER. PULLED THE EMERGENCY BRAKE TO STOP THE CAR AND TURNED IT OFF. TRIED TO START IT AGAIN, AND IT WAS DOING THE SAME THING. TURNED IT OFF AND WAITED FOR AWHILE.

FINALLY TURNED THE CAR BACK ON, AND IT WAS OPERATING NORMALLY. MANAGED TO GET TO MY DESTINATION SAFELY. HAVEN'T TAKEN IT TO TOYOTA. NOT SURE THEY WOULD DO ANYTHING. *TR
Additional Summary:

Toyota ID No:
NHTSA ODI No: 10290151
Date of Incident: 20091110
Vehicle: 2010 TOYOTA PRIUS
Location of Incident: CHICAGO, IL
NHTSA Summary:
2010 PRIUS ACCELERATION SURGE - WHEN I DRIVE OVER A SEWER COVER OR ANY SIMILAR INDENTATIONS IN THE ROADWAY THE VEHICLE SURGES FORWARD IN AN AGGRESSIVE MANNER. I NEED TO APPLY THE BRAKES OR STEER TO AVOID ANY OBJECT IN THE PATH OF THE VEHICLE. IT IS VERY UNSETTLING AND DANGEROUS SINCE THE SURGE IS STRONG AND UNPREDICTABLE. *TR
Additional Summary:

Toyota ID No:
NHTSA ODI No: 10292024
Date of Incident: 20091111
Vehicle: 2003 TOYOTA CAMRY
Location of Incident: OTTUMWA, IA
NHTSA Summary:
2003 TOYOTA CAMRY. I WAS PARKING MY CAR ON CITY STREET. SLOWING TO STOP. FOOT ON BRAKE. READY TO PLACE SHIFTER IN PARK. MY CAR TOOK OFF *LIKE A ROCKET* I COULD NOT STOP IT, MY FOOT NEVER LEFT THE BRAKE. BUT IT DID NO GOOD. CAR ACCELERATED LIKE MY CAR WAS *PLOGGED*. DID NOT STOP UNTIL IT HEAR-ENDED ANOTHER PARKED CAR. NOW I WORRY ABOUT POSSIBLE *AT FAULT ACCIDENT* ON MY INSURANCE RECORD, A CITATION FROM LAWS ENFORCEMENT AND DAMAGE TO BOTH CARS!!!

BEING PARKED FOR 10 HOURS DROVE IT 7 MILES TO MY HOME WITH NO FURTHER PROBLEM. *TR
Additional Summary:

Toyota ID No:
NHTSA ODI No: 10297716, 10297707
Date of Incident: 20091112
Vehicle: 2005 TOYOTA CAMRY
Location of Incident: MOUNT PROSPECT, IL
NHTSA Summary:
TL*THE CONTACT OWNS A 2005 TOYOTA CAMRY. WHILE ENTERING A PARKING SPACE, THE VEHICLE SUDDENLY ACCELERATED. CONSEQUENTLY SHE CRASHED INTO TWO PARKED VEHICLES AND THEN STRUCK A PEDESTRIAN. THE FRONT PASSENGER IN THE VEHICLE RECEIVED INJURIES FROM BEING RESTRAINED BY THE SEAT BELT. THE PEDESTRIAN WAS TRANSPORTED BY AMBULANCE TO THE HOSPITAL. THE MANUFACTURER SENT AN INVESTIGATOR TO THE DEALER TO INSPECT HER VEHICLE; YET, HE COULD NOT IDENTIFY THE CAUSE OF THE FAILURE. THE VEHICLE WILL BE REPAIRED. THE CURRENT AND THE FAILURE MILEAGES WERE 12,000.
Additional Summary:

Toyota ID No:
NHTSA ODI No: 10293860
Date of Incident: 20091112
Vehicle: 2002 LEXUS ES300
Location of Incident: ORLANDO, FL
NHTSA Summary:
TL* THE CONTACT OWNS A 2002 LEXUS ES 300. WHILE ENTERING A PARKING SPACE, THE VEHICLE ACCELERATED WITHOUT INTENTION. THE VEHICLE DROVE OVER THE SIDEWALK AND CRASHED INTO A PARKED VEHICLE. AFTER HITTING THE VEHICLE, SHE PUT THE VEHICLE IN REVERSE, BUT THE VEHICLE THEN ACCELERATED INTO A TREE. A POLICE REPORT WAS FILED. THE VEHICLE WAS TOWED TO A COLLISION CENTER. THE CURRENT AND FAILURE MILEAGES WERE APPROXIMATELY 41,000.
Additional Summary:

Toyota ID No:
NHTSA ODI No: 10293534
Date of Incident: 20091112
Vehicle: 2004 TOYOTA RAV4
Location of Incident: ROMEOVILLE, IL
NHTSA Summary:
2004 RAV4. ACCELERATOR HAS BECOME ERRATIC IN THE LAST 2 MONTHS. CAR WILL LEAP AHEAD WITH VIRTUALLY NO PRESSURE ON PEDAL. ONLY DOES IT OCCASIONALLY. PEDAL IS MOUNTED QUITE HIGH, ABOVE THE BRAKE PEDAL, AND CANNOT CONTACT FLOOR MATS. WHILE PULLING INTO A RIGHT ANGLE PARKING SPOT AT LOW SPEED AND WITH FOOT ON BRAKE, VEHICLE SUDDENLY SURGED AHEAD. I WAS ONLY 3 FEET FROM A BRICK WALL AND COULD NOT RESPOND QUICKLY ENOUGH TO BRAKE THE VEHICLE. IMPACT WITH WALL PLASTER (ABOUT 1 FOOT WIDE) CRUSHED THE BUMPER, GRILL AND BUCKLED THE HOOD. APPARENTLY AIRBAG WAS NOT GREAT AND THE AIRBAGS DID NOT DEPLOY BUT SEATBELTS CAUSED CHEST INJURY TO BOTH MY PASSENGER AND MYSELF. PERHAPS FORTUNATE THAT THE WALL WAS SO CLOSE OR MY PASSENGER AND MYSELF MIGHT HAVE BEEN MORE SERIOUSLY INJURED. WILL BE TRADING THIS CAR IN AS SOON AS IT IS REPAIRED. *TR

Additional Summary:

Toyota ID No:
NHTSA ODI No: 10292212
Date of Incident: 20091113
Vehicle: 2002 LEXUS LS430
Location of Incident: MOBILE, AL
NHTSA Summary:
TL* THE CONTACT OWNS A 2002 LEXUS LS430. WHEN ATTEMPTING TO ENTERING A PARKING SPACE, THE VEHICLE ACCELERATED WITHOUT INTENTION. EVEN AFTER REPEATED BRAKE APPLICATION THE VEHICLE WOULD NOT STOP. CONSEQUENTLY SHE CRASHED INTO SEVERAL VEHICLES AND INTO A BUILDING. THE VEHICLE WAS IN THE PROCESS OF BEING INSPECTED TO DETERMINE THE CAUSE OF THE FAILURE. THE FAILURE AND CURRENT MILEAGES WERE 72,000.
Additional Summary:

Toyota ID No:
NHTSA ODI No: 10292182
Date of Incident: 20091114
Vehicle: 2010 TOYOTA PRIUS
Location of Incident: OAKLAND, CA
NHTSA Summary:
I WAS DRIVING MY NEW 2010 PRIUS (APPROX. 250 MILES ON ODOMETER) WHEN APPROACHING A STOP LIGHT EARLIER TODAY WITH MY FOOT GENTLY APPLYING PRESSURE TO THE BRAKE WHEN SUDDENLY THE CAR SURGED FORWARD ACCELERATING. I AM CERTAIN MY FOOT WAS NOT ON THE ACCELERATOR PEDAL NOR WAS ANYTHING ON THE FLOOR AND THE FLOOR MAT WAS APPROPRIATELY SORTTOGED. THE ACCELERATION ONLY LASTED A SECOND, BUT ONCE I APPLIED MORE PRESSURE SHARPLY TO THE BRAKE PEDAL THE CAR SLOWED AND THE ACCELERATION CEASED. THIS IS THE ONLY TIME THIS HAS OCCURRED. *TR
Additional Summary:

Toyota ID No: lost speed
NHTSA ODI No: 10298754
Date of Incident: 20091114
Vehicle: 2009 TOYOTA RAV4
Location of Incident: BRISTOL, PA
NHTSA Summary:
TL*THE CONTACT OWNS A 2009 TOYOTA RAV4. THE CONTACT WAS DRIVING APPROXIMATELY 5 MPH ON WET ROAD CONDITIONS, PROCEEDING TO A TRAFFIC SIGNAL. THERE WAS AN UNINTENDED INCREASE IN ACCELERATION. THE DRIVER APPLIED AN AGGRESSIVE FORCE TO THE BRAKE PEDAL. THE VEHICLE FAILED TO SLOW DOWN AND IMMEDIATELY, THE GEAR SHIFTER WAS PLACED INTO THE "NEUTRAL" POSITION. THE VEHICLE STOPPED AND ENGINE TURNED OFF. THE VEHICLE WAS ABLE TO RESUME NORMAL OPERATION. THE VEHICLE WAS TAKEN TO AN AUTHORIZED DEALER FOR INSPECTION. THE THROTTLE BODY WAS CLEANED. ON A SEPARATE OCCASION THE VEHICLE WAS TAKEN TO AN AUTHORIZED DEALER FOR THE IDENTICAL FAILURE WHICH THERE WERE NO RESOLUTIONS. THE FAILURE MILEAGE WAS 2,863.
Additional Summary:

Toyota ID No:

NHTSA ODI No: 10292864
Date of Incident: 20091114
Vehicle: 2001 LEXUS RX300
Location of Incident: TUCSON, AZ
NHTSA Summary:
TL*THE CONTACT OWNS A 2001 LEXUS RX300. WHILE DRIVING 40 MPH WITH THE CRUISE CONTROL ENGAGED, THEN THE VEHICLE ACCELERATES ON ITS OWN. SHE ATTEMPTED TO TURN THE CRUISE CONTROL OFF. HOWEVER, AFTER DISNGAGING THE BRAKES THE VEHICLE FAILED TO STOP AND ACCELERATED UP TO 140 MPH. THE CONTACT WAS FORCED TO EXIT AT AN OFF RAMP, DOWN SHIFT INTO PARK IN ORDER TO STOP THE VEHICLE. THE DEALER STATED THAT THE THROTTLE CABLE WAS STUCK AND FRAYED; HOWEVER, HE ALSO STATED THAT THE CABLE EXHIBITED NORMAL WEAR AND TEAR. THE FAILURE MILEAGE WAS 80,000.
Additional Summary:

Toyota ID No:
NHTSA ODI No: 10290808
Date of Incident: 20091116
Vehicle: 2003 TOYOTA CAMRY
Location of Incident: TORRENT, CA
NHTSA Summary:
TL*THE CONTACT OWNS A 2003 TOYOTA CAMRY. THE CONTACT STATED THAT WHILE AT THE STOP LIGHT HER FOOT WAS ON THE BRAKE AND WITHOUT WARNING THE VEHICLE LUNGED FORWARD AND CRASHED INTO THE REAR OF ANOTHER VEHICLE. THE CRASH CAUSED DAMAGE TO BOTH VEHICLES. THE CONTACT CALLED THE MANUFACTURER AND A MECHANIC FROM TOYOTA NATIONAL HEADQUARTERS RETRIEVED DATA FROM THE VEHICLE. THE CONTACT STATED THAT THE SERVICE MANAGER AT A LOCAL DEALER STATED THAT THE MANUFACTURER SAW NOTHING WRONG WITH THE VEHICLE. THE CONTACT STATED THAT IF THE OTHER VEHICLE WAS NOT IN FRONT OF HIM IT WOULD HAVE ACCELERATED INTO ON-COMING TRAFFIC. THE FAILURE MILEAGE WAS 85,000.
Additional Summary:

Toyota ID No: 10292295
NHTSA ODI No: 20091116
Date of Incident: 2005 TOYOTA CAMRY
Vehicle: TEMPE, AZ
Location of Incident:
NHTSA Summary:
TL*THE CONTACT OWNS A 2005 TOYOTA CAMRY. THE CONTACT WAS DRIVING OUT OF THE GARAGE WHEN THE VEHICLE SUDDENLY ACCELERATED FORWARD INTO AN ELECTRICAL BOX AND HIT HER NEIGHBORS HOUSE. THE CONTACT SUSTAINED INJURIES AND WAS TRANSPORTED TO THE HOSPITAL. THE VEHICLE WILL BE TOWED TO THE DEALER TO BE REPAIRED. THE MANUFACTURER ADVISED THE CONTACT THAT THE 2005 TOYOTA CAMRY WAS NOT ON THE RECALL LIST FOR SUDDEN ACCELERATION. THE VIN AND MILEAGE WERE UNKNOWN.
Additional Summary:

Toyota ID No:
NHTSA ODI No: 10296056
Date of Incident: 20091116
Vehicle: 2001 TOYOTA COROLLA

Location of Incident: HOUSTON, TX
NHTSA Summary:
TL*THE CONTACT OWNS A 2001 TOYOTA COROLLA. WHILE ATTEMPTING TO EXIT A FREEWAY AT 50 MPH THE ACCELERATOR PEDAL BECAME STUCK TO THE FLOOR. AFTER REPEATED BRAKE APPLICATION THE VEHICLE WOULD NOT STOP. AFTER SHE SHIFTED THE VEHICLE INTO PARK, THE VEHICLE RESET ITSELF. THE VEHICLE WAS TAKEN TO THE DEALER, BUT THE TECHNICIAN COULD NOT IDENTIFY THE CAUSE OF THE FAILURE. HE WAS WAITING FOR A RESPONSE FROM THE MANAGER OF THE DEALERSHIP. THE FAILURE MILEAGE WAS 40,076.
Additional Summary:

Toyota ID No:
NHTSA ODI No: 10293963
Date of Incident: 20091121
Vehicle: 2003 TOYOTA CAMRY
Location of Incident: BROAD RUN, VA
NHTSA Summary:
ON 2 OCCASIONS THE GAS PEDAL HAS STUCK ON MY 2003 TOYOTA CAMRY. ON THE FIRST OCCASION, IT OCCURRED WHILE I WAS ON THE HIGHWAY TRAVELING FORWARD WITH THE TRANSMISSION IN DRIVE. THE 2ND OCCASION WAS ON SATURDAY, NOVEMBER 21, WHEN I PUT THE CAR IN REVERSE. ON BOTH OCCASIONS I WAS ABLE TO GET THE CAR UNDER CONTROL BY FORCEFULLY STEPPING ON THE BRAKE PEDAL. BUT THE SECOND TIME THIS OCCURRED WAS A VERY NEAR ACCIDENT - CAME WITHIN INCHES OF HITTING A PARKED VEHICLE. *TR
Additional Summary:

Toyota ID No:
NHTSA ODI No: 10293549
Date of Incident: 20091124
Vehicle: 2001 TOYOTA COROLLA
Location of Incident: HOLYOKE, MA
NHTSA Summary:
WAS DRIVING MY 2001 TOYOTA COROLLA LAST NIGHT AND WHEN I TOOK MY FOOT OFF OF THE GAS PEDAL THE CAR JUST STARTED ACCELERATING ON ITS OWN - IT DID IT 2 OR 3 TIMES WHEN I PULLED OVER AND SHUT THE CAR OFF. *TR
Additional Summary:

Toyota ID No:
NHTSA ODI No: 10294965
Date of Incident: 20091124
Vehicle: 2006 TOYOTA COROLLA
Location of Incident: CUPERTINO, CA
NHTSA Summary:
SUDDEN ACCELERATION AT HIGHWAY SPEEDS IN 2006 TOYOTA COROLLA ID # INOBR32E86C758049 - ON 11-24-09 TRAVELLING SOUTH ON HIGHWAY 5 IN CALIFORNIA NEAR BUTTONWILLOW AT APPROXIMATELY 70-75 MILES PER HOUR IN THE FAST LANE, PROBABLY WHILE ON CRUISE CONTROL, CAR BEGAN TO ACCELERATE. HIT THE BRAKE WHICH HAD NO EFFECT, AND IF IT HAD BEEN ON CRUISE CONTROL, IT DID NOT OVERRIDE THE ACCELERATION. I BEGAN TO GET CLOSER TO THE CAR IN FRONT OF ME. I DO NOT BELIEVE I INITIALLY TRIED TO PUT THE CAR INTO NEUTRAL. I TURNED OFF THE CAR ENGINE, THE ACCELERATION STOPPED. I HIT THE BRAKE SOMEWHAT TO GET IT DOWN TO A REGULAR SPEED, PUT THE CAR INTO NEUTRAL, STARTED IT WHILE COASTING, PUT IT

BACK INTO GEAR (MANUAL TRANSMISSION) AND THE CRISIS WAS OVER. THEN, ABOUT AN HOUR LATER, WHILE ON THE GRAPEVINE PORTION OF HWY 5 AFTER THE SUMMIT, IT DID THE SAME THING WITH LESSER TRAFFIC. I PUT IT INTO NEUTRAL THIS TIME, HIT THE BRAKE, SLOWED A LITTLE, PUT IT BACK INTO GEAR AND SINCE THEN IT HAS NOT OCCURRED. SEE NEXT PARAGRAPH. OVER THE PAST 3 YEARS, THERE HAVE BEEN A NUMBER OF ADDITIONAL OCCASIONS WITH A DIFFERENT ISSUE WHERE: I MY FOOT HAS SLIPPED OFF THE BRAKE ONTO THE ACCELERATOR, CAUSING THE ENGINE TO REV WHEN IN NEUTRAL IN THE DRIVEWAY OR A STOPLIGHT (I THINK BECAUSE THE PEDALS ARE SMALL AND VERY CLOSE TO ONE ANOTHER), AND, 2) OCCASIONS WHEN THE ACCELERATOR HAS GOT STUCK UNDER THE FLOORMAT WHEN THE FLOORMAT HAD SLID FORWARD CAUSING THE CAR TO ACCELERATE, REGARDING THE HIGHWAY ACCELERATION PROBLEM, THIS WAS NOT THE CASE.
Additional Summary:

Toyota ID No:
NHTSA ODI No: 10230575
Date of Incident: 20091125
Vehicle: 2006 TOYOTA 4RUNNER
Location of Incident: MANNINGTON, WV
NHTSA Summary:
TL* THE CONTACT OWNS A 2006 TOYOTA 4RUNNER, WHILE DRIVING 35 MPH THE VEHICLE ACCELERATED UP TO 100 MPH WITHOUT INTENTION. AFTER REPEATED BRAKE APPLICATIONS HE WAS ABLE TO DECELERATE. THE VEHICLE WAS TAKEN TO THE DEALER BUT THEY COULD NOT DUPLICATE THE FAILURE. THE TOYOTA MANUFACTURER WAS NOTIFIED, AND HE WAS ADVISED THAT A REMEDY WOULD NOT BE AVAILABLE UNTIL APRIL 2010. THE FAILURE MILEAGE WAS 5,300.
Additional Summary:

Toyota ID No:
NHTSA ODI No: 10294229
Date of Incident: 20091125
Vehicle: 2006 TOYOTA CAMRY
Location of Incident: BINGHAM, MA
NHTSA Summary:
TL *THE CONTACT OWNS A 2006 TOYOTA CAMRY. AS THE CONTACT WAS DRIVING IN REVERSE OUT OF THE DRIVEWAY, THE VEHICLE SUDDENLY ACCELERATED WITHOUT WARNING AND CRASHED INTO A TREE. THE FAILURE HAS NOT BEEN DIAGNOSED BY THE DEALER AND THERE WERE NO PRIOR WARNINGS. THE CURRENT AND FAILURE MILEAGES WERE 34,000.
Additional Summary:

Toyota ID No:
NHTSA ODI No: 10293955
Date of Incident: 20091127
Vehicle: 2002 TOYOTA CAMRY
Location of Incident: APPLETON, WI
NHTSA Summary:
TL *THE CONTACT OWNS A 2002 TOYOTA CAMRY. IMMEDIATELY AFTER STARTING THE VEHICLE, THE RPMS INCREASED TO 5,000. THE ENGINE WAS TURNED OFF AND TOWED TO AN AUTHORIZED DEALER FOR INSPECTION. THE TECHNICIAN STATED THAT THE FAILURE WAS CONTRIBUTED TO THE ACCELERATOR PEDAL WARNING SENSOR. THE VEHICLE IS IN THE PROCESS OF BEING REPAIRED. THE CONTACT HAD CONCERNS OF THE SAFETY RISK

INVOLVED. THE VIN WAS UNAVAILABLE. THE FAILURE AND CURRENT MILEAGES WERE 112,000.
Additional Summary:

Toyota ID No:
NHTSA ODI No: 10294068
Date of Incident: 20091125
Vehicle: 2004 TOYOTA SIENNA
Location of Incident: FISHERS, IN
NHTSA Summary:
NHTSA COMPLAINT:
TOYOTA SIENNA LE 2004 SUDDENLY ACCELERATED WHILE BRAKE PEDAL WAS PRESSED ON A PARKING. CAR CRASHED INTO THE WALL BECAUSE IT WAS ONLY A FEW FEET IN FRONT OF THE VEHICLE. *TR.
WHE WAS GOING TO WORK - TO PARKING SPOT ON PARKING DECK; WA - CRASHED INTO WALL; BOTH AIR BAGS DEPLOYED; SEVERE DAMAGE TO RIGHT FRONT
TOYOTA SIENNA LE 2004 SUDDENLY ACCELERATED WHILE BRAKE PEDAL WAS PRESSED ON A PARKING. CAR CRASHED INTO THE WALL BECAUSE IT WAS ONLY A FEW FEET IN FRONT OF THE VEHICLE.
Additional Summary:

Toyota ID No:
NHTSA ODI No: 10293888
Date of Incident: 20091127
Vehicle: 2006 TOYOTA TUNDRA
Location of Incident: FRASCOTT, AZ
NHTSA Summary:
THIS COMPLAINT IS TO INCLUDE ODI #S 10293108,10293886, AND 10293697. THE ODI #S ARE ALL FOR THE SAME VEHICLE BUT ARE FOR DIFFERENT DATES IN WHICH THE VEHICLE HAD SOMETHING TO REPORT THAT WAS DIFFERENT BUT WERE ASSOCIATED. THIS COMPLAINT IS FOR AN INCIDENT THAT OCCURRED ON NOV. 27TH 2009. I WAS PARKED ALMOST ALL THE WAY OUT OF MY GARAGE. THE VEHICLE WAS RUNNING AND TRANSMISSION WAS IN PARK WITH EMERGENCY BRAKE APPLIED. FORTUNATELY I WAS SITTING BEHIND THE WHEEL AND IMMEDIATELY SHUT THE IGNITION OFF. I DO NOT KNOW THE RPMS. MY WIFE WAS GETTING INTO THE TRUCK ON THE PASSENGER FRONT. WHEN ALL OF A SUDDEN THE ENGINE RACED AS IF WOULD HAVE AS DESCRIBED AS "UNINTENTIONAL SUDDEN ACCELERATION". THIS WAS THE SECOND TIME THAT THE TRUCK DID THIS EXCEPT THAT THE TRANSMISSION WAS IN PARK. BEING OUT IN THE DESERT AND THIS HAPPENING AND BEING IN THE GARAGE IN PARK SENDS OUT TO ME A MESSAGE THAT THIS TRUCK HAS A GLITCH IN IT THAT NOW HAS HAPPENED TWICE. IF I WAS NOT IN THE TRUCK, GOD ONLY KNOWS WHAT WOULD HAVE HAPPENED. I HAVE REPORTED THE SUDDEN ACCELERATION TO TOYOTA ALREADY. TOYOTA HAS LOOKED AT THE TRUCK AT MY DEALERS AND HAS SENT THE INFORMATION TO THEIR LEGAL DEPT. TO DECIDE WHAT THEY WILL DO. I HAVE NOT REPORTED THE LATEST INCIDENT. THE TOYOTA PEOPLE ARE SUPPOSED TO CALL ME MONDAY THE 30TH. I SHALL TELL THEM ABOUT THIS INCIDENT AT THAT TIME. I HAVE ALREADY TOLD THEM THAT THEY SHOULD HAVE IMPOUNDED THE VEHICLE BUT INSTEAD THEY LET ME DRIVE THE VEHICLE HOME. WHAT NEEDS TO HAPPEN IS TOYOTA NEEDS TO BUY THE TRUCK BACK AND MAKE ME WHOLE ON THE COMPLETE PURCHASE PRICE OF THE TRUCK. ONCE THAT IS DONE THEY CAN USE MY VEHICLE AS A TEST TRUCK. THE FLOOR MATS ARE THE CORRECT TOYOTA BRAND WITH ONE KEEPER. MY GAS PEDAL DOESN'T HANG UP, SO POSSIBLY THEY WILL ACTUALLY HAVE TO FIND THE PROBLEM. I REALLY HOPE THEY FIND WHAT THE ISSUE IS. BUT ONCE THEY SAY THAT "IT IS FIXED", I'LL WAIT ANOTHER

YEAR BEFORE I AMUSE MYSELF TO PURCHASE ANOTHER TRUCK. I ALWAYS TRUSTED TOYOTA BUT NO MORE. *TR
Additional Summary:

Toyota ID No:
NHTSA ODI No: 10294290
Date of Incident: 20091201
Vehicle: 2005 TOYOTA CAMRY
Location of Incident: PORT ORANGE, FL
NHTSA Summary:
I JUST LEFT A CAR WASH AND WENT TO FILL INTO THE AREA WHERE YOU CAN VACUUM YOUR CAR. THE CAR SUDDENLY ACCELERATED ON ITS OWN AND STRUCK A WALL. NOTHING HAS BEEN DONE YET SINCE THE INCIDENT JUST OCCURRED TODAY. *TR
Additional Summary:

Toyota ID No:
NHTSA ODI No:
Date of Incident: 20091206
Vehicle: 2002 TOYOTA CAMRY
Location of Incident: WORCESTER, MA
NHTSA Summary:
Additional Summary:
I am writing to you in regard to the Toyota recall. I have a 2002 Toyota Camry which is not listed as one of the vehicles in the recall, however, my husband and I were in an accident on Nov. 6th. We were on Main St. in Lee, MA in traffic. My husband was driving and we saw the car in front of us stop to let another vehicle out of a parking lot. We were a good distance behind and luckily not going fast. My husband put on the break but the car kept going. I looked over and saw his foot pressing hard on the break and the car kept going and the engine was making a "revving" noise. We hit the car in front of us not once but twice and the car finally stopped because we went under the back bumper of the other vehicle. Luckily nobody in either vehicle was hurt. Our car had to be towed back to Worcester. We explained what happened and ask that they check the car for any problem with the accelerator. They couldn't find a problem but told us to get in touch with Toyota. We called Herb Chambers Toyota where we purchased the car and they gave us a "recall" number to call. You guessed it - we haven't been able to get through. After hearing the latest report, I'm nervous to drive the car, especially when I have my grandson. Do you know if Toyota is even looking into a problem with earlier model cars?

Toyota ID No:
NHTSA ODI No:
Date of Incident: 20091206
Vehicle: 2001 LEXUS IS 300
Location of Incident: HUNTSVILLE, AL
NHTSA Summary:
SEA - VEHICLE STRUCK BRICK WALL AND FLIPPED. MERGING ONTO HIGHWAY, VEHICLE SUDDENLY CROSSED BOTH LANES AND STRUCK CONCRETE BARRIER IN MEDIAN. UNSURE IF ACCELERATOR STUCK BUT IT'S THE ONLY THING SHE CAN THINK COULD HAVE HAPPENED.
Additional Summary:

Toyota ID No:
NHTSA ODI No: 10295974
Date of Incident: 20091206

Vehicle: 2002 TOYOTA SIENNA
Location of Incident: RINGOES, NJ
NHTSA Summary:
TOYOTA SIENNA VAN APPEARED TO HAVE SUDDEN ACCELERATION PROBLEM WHEN STOPPED AT STOP SIGN. ENGINE REVVED UP AS ACCELERATOR WAS ABOUT TO BE APPLIED. SO I HAD TO APPLY BRAKES AS CAR WAS MAKING SUDDEN MOVEMENTS. QUICKLY PUT CAR INTO NEUTRAL POSITION. *TR
Additional Summary:

Toyota ID No:
NHTSA ODI No: 10296729
Date of Incident: 20091209
Vehicle: 2001 TOYOTA CAMRY
Location of Incident: PORTLAND, OR
NHTSA Summary:
TL* THE CONTACT OWNS A 2001 TOYOTA CAMRY. WHILE IN A DRIVE-THRU ESTABLISHMENT HE APPLIED PRESSURE TO THE BRAKE PEDAL AND THEN THE VEHICLE ACCELERATED WITHOUT INTENTION. AS A CONSEQUENCE HE CRASHED INTO A BRICK WALL. HE WAS MODERATELY INJURED. THE FIRE DEPARTMENT AND POLICE WERE CALLED TO THE SCENE. THE VEHICLE WAS COMPLETELY DESTROYED. THE VEHICLE WAS TOWED TO A COLLISION CENTER. THE FAILURE AND CURRENT MILEAGES WERE 68,000.
Additional Summary:

Toyota ID No:
NHTSA ODI No: 10295472
Date of Incident: 20091210
Vehicle: 2010 TOYOTA PRIUS
Location of Incident: ASTORIA, NY
NHTSA Summary:
TOYOTA PRIUS 2010: WHEN THE CAR HITS A BUMP IN THE ROAD IT WILL ACCELERATE SO FAST BY ITSELF WHICH CAN BE VERY DANGEROUS AND FATAL. IT CAN HIGHLY CAUSE AN ACCIDENT IF THE DRIVER CANNOT STEP ON THE BRAKES IN TIME TO STOP THE CAR ACCELERATION. I WENT TO MY LOCAL TOYOTA DEALER HERE IN QUEENS NEW YORK AND TO MY SURPRISE THE REP SAID" I HAVE NEVER HEARD OF THAT COMPLAINT" AND DID NOT PURSUE THE MATTER AT ALL. ANOTHER SAFETY CONCERN IS THAT I HIT A SMALL POTHOLE AND THE WHOLE TIRE WAS DAMAGED ON MY BRAND NEW 2010 PRIUS WHICH I HAVE BEEN DRIVING FOR BARELY TWO MONTHS. I AM VERY CONCERNED ABOUT THESE SAFETY PROBLEMS AND DO NOT REALLY KNOW WHERE TO START GETTING ASSISTANCE. THANK YOU VERY MUCH. *TR
Additional Summary:

Toyota ID No:
NHTSA ODI No: 10298951
Date of Incident: 20091211
Vehicle: 2000 TOYOTA COROLLA
Location of Incident: PHILADELPHIA, PA
NHTSA Summary:
TL*THE CONTACT OWNS A 2000 TOYOTA COROLLA. WHILE DRIVING BETWEEN 25 AND 30 MPH, THE VEHICLE ACCELERATED INTO ONCOMING TRAFFIC WHEN HE ATTEMPTED TO STOP AT A TRAFFIC LIGHT. THE FAILURE OCCURRED ON DECEMBER 9, 2009 WHEN HE ENGAGED THE BRAKE PEDAL. THE FAILURE RECURRED SIX TIMES CONTINUOUSLY TWO

DAYS LATER ON DECEMBER 11, 2009 THE CONTACT WAS ABLE AVOID A CRASH; HOWEVER, HE IS CONCERNED ABOUT THE SAFETY RISK. THE FAILURE MILEAGE WAS 132860 AND THE CURRENT MILEAGE WAS 132860.
Additional Summary:

Toyota ID No:
NHTSA ODI No:
Date of Incident: 20091212
Vehicle: 2000 TOYOTA COROLLA
Location of Incident: PHILADELPHIA, PA
NHTSA Summary:
"PRODUCTS LIABILITY -- TOYOTA ACCELERATION - He has a Toyota Corolla. The first time he experienced a problem was in October. He came to a stop sign and instead of slowing down, it accelerated. He had 2 other episodes. He called the Toyota Dealership and on 12/11/2009 they inspected it. One day later, he is driving in normal traffic, and the car accelerated again. He almost went into oncoming traffic. The car is parked in his driveway and he is scared to drive it again."
DIAGNOSTIC DONE BY CONSCELLA TOYOTA IN COSHOHOCKEN. PA DID NOT REVEAL ANY DEFECTS OR PROBLEMS. MR. MOORE HAS RECEIPT FOR THIS TEST.
Additional Summary:

Toyota ID No:
NHTSA ODI No: 10295617
Date of Incident: 20091212
Vehicle: 2004 LEXUS RX330
Location of Incident: NAMPA, ID
NHTSA Summary:
NO FAILURE, JUST APPARENT STICKINESS IN ACCELERATOR. OCCASIONALLY, WHILE PULLING OUT FROM SIGNALS, PEDAL FEELS AS IF IT IS STICKING, THEN WILL POP LOOSE AND CAR LURCHES FORWARD. *TR
Additional Summary:

Toyota ID No: 0912122197
NHTSA ODI No:
Date of Incident: 20091215
Vehicle: 2006 TOYOTA 4 RUNNER
Location of Incident: LITTLE ROCK, AR
Additional Summary: JTEBU14R660057991 2006 4-Runner with 4.0 L V-6
December 15, 2009. Coming into small town in Arkansas - with CC on, tripped brakes, to slow, it did. Turned into parking lot at 17 mph and coasted to foot on brake - trying to complete stop - ABS kicked on - heard clicking and mounting sound (familiar with that) going 3 to 5 mph when it happened. Pole in front of him at 3 feet. With foot on brake car hopped into the pole. Rear end was hopping tires spinning... slammed car into Park - engine was racing even after the vehicle in Park. Carpeted floor mats in place and hooked. Two witnesses came out of the store and saw. Had 4K on it never had a problem.
Drove it to Father's and called Toyota. Took to North Point Toyota (in North Little Rock). They said nothing wrong with the vehicle. Drove for about 150 miles.
Toyota assigned case number 0912122197. Nicole Morrison claims manager at Toyota corp. handled the claim. Indicated that someone from Regional will call within four days. Never heard back from them.
Farmers Insurance - talked to them.
Sent: Monday, January 04, 2010 2:18 PM
My 2006 4runner had a sudden acceleration episode that caused me to hit a pole (thankfully, or I would have gone then on Exxon Mini Mart). Toyota has had my vehicle for three weeks. They have tried to get

me to take the vehicle back, saying they can find nothing wrong. A specialist is suppose to be looking at it today, but I am confident he will say there is nothing wrong either. The dealer does not qualify for the lemon law, and I am stuck with a vehicle I won't drive and won't sell to someone else. Do you have any thoughts on how I can get Toyota to buy the vehicle back? They have said they cannot fix anything because they cannot find anything to fix. What is the best thing to do at this point?

Toyota ID No:
NHTSA ODI No: 10296332
Date of Incident: 20091212
Vehicle: 2001 TOYOTA 4RUNNER
Location of Incident: CREVE COEUR, IL
NHTSA Summary:
TL* THE CONTACT OWNS A 2001 TOYOTA 4RUNNER. WHILE DRIVING 35 MPH SHE ATTEMPTED TO BRAKE, BUT THE VEHICLE SUDDENLY ACCELERATED. WENT AIR BORN, AND LANDED DOWN A RAVINE. THE DRIVER FRONTAL AIR BAG DID NOT DEPLOY. SHE DID NOT RECEIVE ANY INJURIES. AFTER CAREFUL EXAMINATION HE NOTICED THAT THE ACCELERATOR PEDAL WAS TRAPPED BY THE FLOOR MAT. SHE RECEIVED POLICE REPORT NUMBER 097267. SHE RECEIVED A TICKET FOR FAILURE TO REDUCE SPEED. THE VEHICLE WAS TOWED TO THE BODY SHOP. THE FAILURE AND CURRENT MILEAGES WERE 70,000.
Additional Summary:

Toyota ID No:
NHTSA ODI No: 10296614
Date of Incident: 20091231
Vehicle: 2000 TOYOTA COROLLA
Location of Incident: PHILADELPHIA, PA
NHTSA Summary:
TL*THE CONTACT OWNS A 2000 TOYOTA COROLLA. WHILE DRIVING 35 MPH THE VEHICLE ACCELERATED WITHOUT WARNING. THE VEHICLE DID NOT CRASH BUT THE CONTACT WAS VERY CONCERNED ABOUT THE POSSIBILITY THAT A CRASH COULD HAVE OCCURRED. THE DEALER DIAGNOSED THE FAILURE AND CONFIRMED THAT IT WAS NOT RELATED TO THE VEHICLE SPEED CONTROL. THE CONTACT STATED THAT THIS IS A MAJOR SAFETY ISSUE WHICH HAS OCCURRED ON MORE THAN ONE OCCASION. THE CONTACT ALSO HAS CONCERNS THAT HE COULD SUSTAIN MINOR INJURIES IF A CRASH OCCURRED. THE FAILURE MILEAGE WAS 132,000.
Additional Summary:

Toyota ID No:
NHTSA ODI No: 10295915
Date of Incident: 20091214
Vehicle: 2003 TOYOTA SIENNA
Location of Incident: EUGENE, OR
NHTSA Summary:
TOYOTA SIENNA 2003. I WAS PULLING INTO A PARKING SPACE IN A PARKING GARAGE. I BELIEVE I HAD PUT THE CAR IN REVERSE TO BACK UP TO STRAIGHTEND THE CAR AND I PUT MY FOOT ON THE BRAKE. THE CAR SUDDENLY SHOT FORWARD FULL FORCE AND WAS STOPPED BY A CONCRETE AND WIRE RETAINING WALL. THE ENGINE DIED AT IMPACT. THE CAR WAS NOT DRIVABLE AND WAS TOWED. I WAS STUNNED. I WENT INTO THE BUILDING AND AFTER A SHORT TIME FELT CHEST PAIN AND SHORTNESS OF BREATH. I WENT TO THE EMERGENCY ROOM AND WAS TREATED AND RELEASED. I RECEIVED A CHEST WALL CONTUSION, PROBABLY CRACKED RIBS, DEEP TISSUE CONTUSION AND A LARGE BRUISE FROM THE SEAT BELT. I WAS GIVEN VICODIN FOR PAIN. THE CAR WAS

TOWED TO A TOYOTA DEALERSHIP BUT THE DAMAGE HAS NOT BEEN ESTIMATED YET. I AM AWARE THAT THE PROBLEM OF UNCONTROLLED ACCELERATION IN TOYOTA SIENNAS HAS BEEN REPORTED TO BOTH THE AGENCY AND TOYOTA BEFORE (NHTSA REPORT #10265386). WHY HAS THIS NOT BEEN ADDRESSED OR THE VEHICLE RECALLED? ARE YOU WAITING FOR ANOTHER TRAGEDY LIKE THE ONE PREVIOUSLY REPORTED ON BY THE MEDIA? I COULD HAVE BEEN KILLED. *TR
Additional Summary:

Toyota ID No:
NHTSA ODI No: 10296972
Date of Incident: 20091215
Vehicle: 2005 TOYOTA HIGHLANDER
Location of Incident: PORT ALLEN, LA
NHTSA Summary:
TL* THE CONTACT OWNS A 2005 TOYOTA HIGHLANDER. WHILE ENTERING A PARKING SPACE, JUST BEFORE APPLYING THE BRAKE, THE VEHICLE ACCELERATED INTO A CONCRETE STEP. NO ONE WAS INJURED DURING THE CRASH BUT THE VEHICLE SUFFERED DAMAGE TO THE FRONT END. HE CALLED THE MANUFACTURER AND THEY COLLECTED ALL THE INFORMATION REGARDING THE INCIDENT. HOWEVER HIS VEHICLE WAS EXCLUDED FROM RECALL 09V485000 (VEHICLE SPEED CONTROL,ACCELERATOR PEDAL). THE CURRENT AND FAILURE MILEAGES WERE 40,002.
Additional Summary:

Toyota ID No:
NHTSA ODI No: 10296528
Date of Incident: 20091219
Vehicle: 2002 TOYOTA CAMRY
Location of Incident: LYNN, MA
NHTSA Summary:
TL*THE CONTACT OWNS A 2002 TOYOTA CAMRY. WHILE DRIVING APPROXIMATELY 10 MPH IN REVERSE, THE VEHICLE ACCELERATED AND CRASHED INTO A POLE. SHE SHIFTED GEARS INTO DRIVE AND THE VEHICLE CONTINUED TO ACCELERATE AND CRASHED INTO A WALL. THERE WERE NO INJURIES. THERE WAS EXTENSIVE DAMAGE TO THE FRONT AND BACK END OF THE VEHICLE. THE VEHICLE WILL BE TOWED TO A TOYOTA DEALER. THE MANUFACTURER WAS NOT NOTIFIED. THE POLICE AND FIRE DEPARTMENT ARRIVED; HOWEVER, NO POLICE REPORT WAS FILED. THE FAILURE MILEAGE WAS 180,000.
Additional Summary:

Toyota ID No:
NHTSA ODI No: 10296886
Date of Incident: 20091119
Vehicle: 2006 TOYOTA CAMRY
Location of Incident: CHICAGO, IL
NHTSA Summary:
TL* THE CONTACT OWNS A 2006 TOYOTA CAMRY. WHILE ATTEMPTING TO SHIFT THE VEHICLE FROM PARK TO DRIVE, THE ACCELERATOR PEDAL BECAME STUCK. CONSEQUENTLY SHE CRASHED INTO THE WALL OF A GARAGE. SHE WAS TAKEN TO THE HOSPITAL FOR A STRAINED NECK AND SHOULDER. A POLICE REPORT WAS AVAILABLE. THE INSURANCE COMPANY WILL CALL THE TOYOTA MANUFACTURER. THE VEHICLE RECEIVED MAJOR DAMAGES. THE VEHICLE WAS TOWED TO THE DEALER. THE FAILURE MILEAGE WAS 32,000.
Additional Summary:

Toyota ID No:
NHTSA ODI No: 10297372
Date of Incident: 20091220
Vehicle: 2002 TOYOTA SEQUOIA
Location of Incident: VAN NUYS, CA
NHTSA Summary:
ACCELERATOR PEDAL POSITION SENSOR CIRCUIT MALFUNCTION. *TR
Additional Summary:

Toyota ID No:
NHTSA ODI No: 10297467
Date of Incident: 20091222
Vehicle: 2010 TOYOTA PRIUS
Location of Incident: SANTA MONICA, CA
NHTSA Summary:
I HAVE A NEW TOYOTA PRIUS 2010 AND HAVE EXPERIENCED THE LOSS OF BRAKING COMBINED WITH A SIMULTANEOUS ACCELERATION ABOUT 4 TIMES NOW. IT IS INCREDIBLY SCARY. I HAVE NEVER HAD THIS HAPPEN ON ANY OTHER CAR THAT I'VE DRIVEN. IT HAPPENS WHEN I HIT A BUMP IN THE ROAD. I KNOW SHE THAT MANY PEOPLE ARE EXPERIENCING THIS AS I SAW AN ARTICLE ON MSNBC.MSN.COM. I NOW SEE THAT OTHERS ARE EXPERIENCING THE SAME PROBLEM. THIS HAS TO BE INVESTIGATED. THE LAST TIME IT HAPPENED I WAS FACING A CLIFF AND HAD THE CAR NOT STOPPED, MY DAUGHTER AND I WOULD HAVE GONE OFF THE CLIFF AND PROBABLY WOULD HAVE PERISHED. THIS IS ASKING FOR ACCIDENTS TO HAPPEN AND SOMETHING MUST BE DONE TO FIX THIS PROBLEM. THERE ARE WAY TOO MANY OF THESE CARS ON THE ROAD. I DO NOT HAVE THE VIN NUMBER ON HAND, BUT WILL ADD IT TOMORROW. THIS HAS OCCURRED APPROX 4 TIMES AND THE CAR ACCELERATES AT THE SAME TIME I LOSE BRAKING CAPABILITIES. *TR
Additional Summary:

Toyota ID No:
NHTSA ODI No: 10298616
Date of Incident: 20091225
Vehicle: 2002 TOYOTA CAMRY
Location of Incident: PHILADELPHIA, PA
NHTSA Summary:
TL*THE CONTACT OWNS A 2002 TOYOTA CAMRY. THE CONTACT STATED THAT AS SOON AS THE VEHICLE SHIFTED INTO DRIVE, IT ACCELERATED ON ITS OWN. THE VEHICLE DROVE OVER THE CURB AND INTO A SNOW EMBANKMENT BEFORE CRASHING INTO A STONE WALL. THE CONTACT DID NOT CALL THE POLICE OR NEED TO GO TO A HOSPITAL. THE CONTACTS INSURANCE COMPANY TOWED THE VEHICLE SO THAT IT COULD BE REPAIRED. THE CONTACT CALLED THE MANUFACTURER REGARDING THE CRASH TO FILE A COMPLAINT. THE CONTACT IS CONCERNED SINCE A PASSENGER COULD HAVE BEEN SERIOUSLY INJURED WHEN THE CRASH OCCURRED. THE FAILURE MILEAGE WAS 68,000.
Additional Summary:

Toyota ID No:
NHTSA ODI No: 10297878
Date of Incident: 20091227
Vehicle: 2004 TOYOTA CAMRY

Location of Incident: LAS VEGAS, NV
NHTSA Summary:
DRIVING HOME FROM WORK THIS MORNING, MY 2004 CAMRY SUDDENLY ACCELERATED TO MORE THAN 80 MILES/HOUR. I WAS VERY SCARED. BRAKES WOULD NOT WORK. I STOPPED THE CAR BY CHANGING GEARS TO NEUTRAL. *TR
Additional Summary:

Toyota ID No:
NHTSA ODI No: 10297119
Date of Incident: 20091228
Vehicle: 2010 TOYOTA PRIUS
Location of Incident: LAYTONSVILLE, MD
NHTSA Summary:
I HAVE A 2010 PRIUS WHICH I BOUGHT IN AUGUST 2009. ON SEVERAL OCCASIONS, APPROXIMATELY 8-10 TIMES, I HAVE BEEN BRAKING AT SLOWER SPEEDS WHEN COMING TO AN INTERSECTION. WHEN I PUT MY FOOT ON THE BRAKE AND THE CAR HAPPENS TO HIT A BUMP OR HOLE IN THE ROAD AND THE CAR NOTICEABLY SURGES. MY FOOT IS NOT ON THE ACCELERATOR AND THIS HAS NOTHING TO DO WITH THE FLOOR MATS BECAUSE MY FLOOR MAT IS PINNED TO THE FLOOR OF THE CAR. THE MOST RECENT TIME THIS HAPPENED WAS 12/28/2009. *TR
Additional Summary:

Toyota ID No:
NHTSA ODI No: 10297659
Date of Incident: 20091228
Vehicle: 2008 TOYOTA SIENNA
Location of Incident: PASADENA, CA
NHTSA Summary:
A TOYOTA SIENNA 2008 WAS TURNING SLOWLY ON A CURVE AND THEN IT SUDDENLY ACCELERATED VERY FAST AND WENT THROUGH A FENCE HITTING A WALL. THE AIRBAGS OPENED UP AS WELL. *TB
Additional Summary:

Toyota ID No:
NHTSA ODI No: 10298012
Date of Incident: 20091229
Vehicle: 2008 TOYOTA COROLLA
Location of Incident: BRANDON, FL
NHTSA Summary:
TL*THE CONTACT OWNS A 2008 TOYOTA COROLLA. WHEN THE CONTACT ATTEMPTED TO ENTER A PARKING SPACE THE VEHICLE SUDDENLY ACCELERATED ON ITS OWN AND CRASHED INTO A VEHICLE. THE VEHICLE HAS NOT BEEN DIAGNOSED BY THE DEALER. THE IDENTICAL FAILURE OCCURRED ONE MONTH PRIOR TO THE RECENT INCIDENT. THE CURRENT AND FAILURE MILEAGES WERE 19,997.
Additional Summary:

Toyota ID No:
NHTSA ODI No: 10298215
Date of Incident: 20100101
Vehicle: 2004 TOYOTA SOLARA
Location of Incident: W. IRONGETTA, NY

NHTSA Summary:
TO WHOM THIS MAY CONCERN, MY 2004 TOYOTA SOLARA EXPERIENCED UNINTENDED (RUNAWAY) ACCELERATION IN THE PARKING LOT OF A LOCAL RESTAURANT THIS PAST SUNDAY. PLACING MY FOOT ON THE BREAK DID NOT STOP THIS VEHICLE. THE VEHICLE DID STOP WHEN IT RAN INTO A LARGE ROCK. NO ONE WAS INJURED THIS TIME. THE FLOOR MAT WAS NOT THE CAUSE OF THIS PROBLEM. DOES TOYOTA HAVE ANY SOLUTION/RECALL FOR THIS PROBLEM? IF NOT, DOES TOYOTA HAVE ANY PLANS ON CORRECTING THIS PROBLEM IN THE NEAR FUTURE? A QUICK RESPONSE TO MY QUESTIONS WOULD BE GREATLY APPRECIATED. *TR. BEST REGARDS. FRED
Additional Summary:

Toyota ID No:
NHTSA ODI No: 10298927
Date of Incident: 20100107
Vehicle: 2007 LEXUS RX350
Location of Incident: SANTA ANA, CA
NHTSA Summary:
LEXUS RX350 AUTO-ACCELERATION. WHILE PULLING INTO A PARKING SPOT (AT A SLOW SPEED) IN A PARKING STRUCTURE, THE ENGINE, WITHOUT PRESSURE ON THE GAS PEDAL, SUDDENLY REVED UP TO HIGH SPEED AND ACCELERATED INTO THE WIRE RETAINING CABLES AND WALL OF THE STRUCTURE. THE INSTANCE TRAVELED WAS LESS THAN 10 FEET BEFORE THE CAR WAS STOPPED BY THE RETAINING CABLES AND THE WALL. THE FRONT END OF THE CAR AND THE STRUCTURE WERE DAMAGED. THE IMPACT WAS SEVERE ENOUGH TO BREAK 5 OF THE 7 CABLES. THE AIRBAGS DID NOT DEPLOY.
Additional Summary:

Toyota ID No:
NHTSA ODI No: 10298416
Date of Incident: 20100110
Vehicle: 2010 LEXUS HS
Location of Incident: RICHMOND, VA
NHTSA Summary:
TL*THE CONTACT OWNS A 2010 LEXUS HS250H. THE CONTACT WAS DRIVING APPROXIMATELY 60 MPH ON NORMAL ROAD CONDITIONS WITH THE ACCELERATION CRUISE CONTROL FEATURE ACTIVATED. THE CRUISE CONTROL SYSTEM FAILED TO FUNCTION WHEN IT WAS DISENGAGED. THE ACCELERATION CONTINUED, FOLLOWED BY AN UNINTENDED INCREASE IN SPEED. THE DRIVER WAS ABLE TO SLOW THE VEHICLE DOWN. THERE WERE FOUR SEPARATE OCCASIONS THAT THE IDENTICAL FAILURES OCCURRED WITHOUT WARNING. THE VEHICLE HAS NOT BEEN REPAIRED FOR THE MALFUNCTION AT THIS TIME. THE CONTACT HAD CONCERN OF THE POTENTIAL SAFETY HAZARD. THE FAILURE MILEAGE WAS 2,000.
Additional Summary:

Toyota ID No:
NHTSA ODI No: 251132
Date of Incident: 0
Vehicle: 2000 TOYOTA 4RUNNER
Location of Incident: JACKSONVILLE, FL
NHTSA Summary:
VEHICLE WAS MOVING ABOUT 3 MILES PER HOUR INTO A PARKING SPOT WHILE BRAKE PEDAL WAS BEING PRESSED. ALL OF A SUDDEN THERE WAS AN INSTANT ENGINE SURGE

WHICH PROPELLED THE VEHICLE OVER THE PARKING LOT MEDIA AND CRASHED INTO THE REAR OF ANOTHER CAR. *AK
Additional Summary:

Toyota ID No:
NHTSA ODI No: 10037615
Date of Incident: 0
Vehicle: 2000 TOYOTA 4RUNNER
Location of Incident: HOOVER, AL
NHTSA Summary:
CONSUMER NOTICED THAT WHILE AT A COMPLETE STOP AND WITHOUT ANY INDICATION GAS PEDAL TRAVELED TO FLOORBOARD, FORCING CONSUMER INTO ANOTHER VEHICLE WHILE BRAKES WERE STILL DEPRESSING. MANUFACTURER AND DEALER HAD BEEN NOTIFIED. *AK
Additional Summary:

Toyota ID No:
NHTSA ODI No: 10071432
Date of Incident: 0
Vehicle: 2004 TOYOTA 4RUNNER
Location of Incident: RENO, NV
NHTSA Summary:
DRIVER SEAT WOULD SHIFT AROUND WHILE DRIVING AND ONCE IN GEAR VEHICLE WOULD ACCELERATE ON ITS WON WITHOUT ANY PRESSURE APPLIED TO THE GAS PEDAL. *DF MECHANIC TEST DROVE VEHICLE, BUT FAILED TO FIND OUT THE CAUSE OF THE PROBLEM. *LA
Additional Summary:

Toyota ID No:
NHTSA ODI No:
Date of Incident: 0
Vehicle: 2007 TOYOTA 4RUNNER
Location of Incident: , GA
NHTSA Summary:
Additional Summary:
Thank you for your time and interest on the phone yesterday. As per your request, I am sending you this email to give you a synopsis of my unresolved life threatening situation. My family and myself have faced this situation over the past 2 years and continue to face this problem now. My Toyota 4Runner 07 has had a recurrent problem with the accelerator pedal sticking to the carpet in the floorboard resulting in the car accelerating in excess of 120mph in traffic. We have nearly lost our lives on more than occasions as well as endangering others on the highway when we are experiencing this problem. Fortunately, my husband was driving and I was with him to assist in resolving the problem and we were able to negate a horrific accident. When the accelerator pedal sticks in the carpet in the floorboard, you cannot get your foot under pedal to unstick it. It is stuck so firmly that it takes my husband pulling, strongly with his hand while I steer. If this were to happen with me driving alone, I would not be able to unstick the accelerator pedal and steer at the same time. We have taken the car into Nalley Toyota of Roswell upon 4 occasions and have been assured the problem is fixed upon 3 occasions by the dealership. They have claimed it is the carpet in the floorboard which has been replaced by the dealership, the brake cable making the carpet protrude, the floormat and other excuses, each time assuring us the problem is the problem has been resolved. Upon reading the article about the deaths due to the accelerator pedal sticking in Toyota/Lexus, which Toyota claimed is a floor mat problem resulting in a Nationwide recall. We contacted Corporate Toyota making them aware of our problem, and scheduled to bring in the Forerunner on Monday, October 5th, 2009 to Nalley Toyota of

Roswell. However, on Friday October 2nd, 2009, we were entering 400 from Maxwell and the accelerator pedal once again stuck in the carpet in the floorboard full throttle. At this time, there was no Hammon in the vehicle and yet our accelerator pedal stuck stuck and once again we were going down 400 on a Friday afternoon in excess of 120mph. Thank goodness my husband was driving and not me and he was able to pull with his hand the accelerator pedal from carpet which I steered. You cannot imagine how scary it is when this occurs and you cannot predict when it will occur. We contacted Corporate Toyota to make them aware of the situation and that it occurred without a floor mat in the car. We expressed our concern that they might be wrong in blaming deaths on the floor mats rather than an unknown problem with carpet or design of emergency brake cable protruding and coming loose and pushing carpet up/under carpet some ??? Could they be wrong in what they are blaming deaths on and there are still lives in danger including ours because they are blaming the wrong thing for deaths???? We took the car on Monday, to the dealership to be inspected by the technicians sent by Corporate and despite having the car for entire week, he only took the car out one time for less than 60 miles and was unable to duplicate the problem. Every time the car has been serviced for this same problem, they have suggested alternative methods to solve the problem i.e. putting the car into Neutral that there was a kill switch which did not happen and if has resulted in revving car in excess of 7000rpm and since this event our gas mileage has dropped 25% and the motor has not been the same. They have replaced all the brakes and motor as result of trying to stop the vehicle the first time this occurred. They have told us to turn off the motor which resulted in us going in slow and as we had to turn it back on and we were right back up to 120mph. Each time we had the car in for this problem, we were assured it was repaired. Corporate Toyota has shown no concern for our wellbeing and refuses to take my vehicle back. I no longer feel safe driving this vehicle. I fear for my safety and my family's well-being as well as any other passengers in other vehicles on the road if and when this occurs again/since they have not been able to fix this problem! I would appreciate your help with this serious problem due to the fact that we are not getting anywhere with Corporate Toyota or the dealership. Their response is for us to pursue the lemon law and our concern is to save our lives as well as others nationwide. We now own a car that is no longer safe to drive or to sell.

Toyota ID No:
NHTSA ODI No: 10021124
Date of Incident: 0
Vehicle: 2000 TOYOTA AVALON
Location of Incident: OCEANSIDE, CA
NHTSA Summary:
WHILE TRYING TO TURN KEY IN IGNITION SWITCH OFF DOORS AND WINDOWS WILL AUTOMATICALLY LOCK WITHOUT BEING ABLE TO EXIT VEHICLE. *AK CONSUMER ALSO STATED THAT BRAKES FEEL SPONGY, ALSO WHEN DRIVING, THE VEHICLE WILL SOMETIMES ACCELERATE BY ITSELF. *SLC
Additional Summary:

Toyota ID No:
NHTSA ODI No: 746591
Date of Incident: 0
Vehicle: 2000 TOYOTA CAMRY
Location of Incident: BALTIMORE, MD
NHTSA Summary:
WHILE DRIVING GOING UP A HILL, THE CAR SUDDENLY ACCELERATED WITHOUT WARNING. I TRIED TO STOP THE CAR BY APPLYING THE BRAKES BUT THE CAR FAILED TO SLOW DOWN AND CRASHED INTO THE VEHICLE IN FRONT OF ME. IT WAS RAINING. *AK
Additional Summary:

Toyota ID No:

NHTSA ODI No: 992571
Date of Incident: 0
Vehicle: 2000 TOYOTA CAMRY
Location of Incident: EAST BRUNSWICK, NJ
NHTSA Summary:
WAS DRIVING VEHICLE AND THERE WAS A BREAK IN THE ROAD. A SPLIT SECOND LATER, ABS KICKED IN AND VEHICLE ACCELERATED. HAD NO WARNING IT WOULD HAPPEND. NEARLY HAD AN ACCIDENT. HAD TO PRESS ON BRAKES HARD TO STOP. *AK
Additional Summary:

Toyota ID No:
NHTSA ODI No: 10061883
Date of Incident: 0
Vehicle: 2001 TOYOTA CAMRY
Location of Incident: MIDDLETOWN, CT
NHTSA Summary:
WHILE DRIVING VEHICLE ACCELERATED. DRIVER APPLIED THE BRAKES, AND THE VEHICLE STARTED TO SPIN OUT OF CONTROL. THERE WAS NO ACCIDENT. *AK
Additional Summary:

Toyota ID No:
NHTSA ODI No: 10064804
Date of Incident: 0
Vehicle: 2001 TOYOTA CAMRY
Location of Incident: STOUGHTON, WI
NHTSA Summary:
WHILE DRIVING WITH CRUISE CONTROL ENGAGED, THE DRIVER DEPRESSED THE BRAKES, INSTEAD OF THE BRAKES ENGAGING THE VEHICLE ACCELERATED CAUSING THE DRIVER TO LOSE CONTROL AND HIT THE SIDE. DUE TO THE EXTENT OF IMPACT, THE FRONTAL AIR BAGS DEPLOYED AND THE VEHICLE WAS DEEMED TOTALED. *JB *NM
Additional Summary:

Toyota ID No:
NHTSA ODI No: 10001457
Date of Incident: 0
Vehicle: 2002 TOYOTA CAMRY
Location of Incident: BATTLE CREEK, MI
NHTSA Summary:
WHEN THE BRAKES WERE APPLIED, THE GAS PEDAL WAS PRESSED ACCIDENTALLY, WHICH CAUSED UNEXPECTED ACCELERATION. IN THE BRAKE PEDAL HAD GONE TO THE FLOOR, BELOW THE GAS PEDAL, WHICH HAD FELT SPONGY. THE CONSUMER HAD TAKEN THE VEHICLE TO A SERVICE DEALER WHICH STATED THAT THE BRAKES WERE OUT OF ADJUSTMENT. AFTER THE REPAIR WAS DONE, THE BRAKES STILL REMAINED THE SAME. *CC
Additional Summary:

Toyota ID No:
NHTSA ODI No: 10062899
Date of Incident: 0
Vehicle: 2002 TOYOTA CAMRY
Location of Incident: PARMA, OH

NHTSA Summary:
WHEN STARTING THE VEHICLE, THE ENGINE RACED AND SOUNDED LIKE THE VEHICLE WAS GOING TO ACCELERATE. THE VEHICLE HAD NOT BEEN INSPECTED TO DETERMINE THE CAUSE OF THE PROBLEM. *AK. THE ENGINE WOULD ACCELERATOR UP TO 5000 RPMS AND WOULD NOT SETTLE DOWN. *BC
Additional Summary:

Toyota ID No:
NHTSA ODI No: 10071783
Date of Incident: 0
Vehicle: 2002 TOYOTA CAMRY
Location of Incident: MUNISING, MI
NHTSA Summary:
CONSUMER LEFT VEHICLE AFTER SHIFTING INTO PARK WITH MOTOR RUNNING, OPENED GARAGE DOOR, AND THEN REENTERED VEHICLE. SHIFTED OUT OF PARK WITH FOOT ON THE BRAKES AND VEHICLE SUDDENLY SURGED FORWARD INTO GARAGE. HAD NOT PLACED FOOT ON ACCELERATOR PEDAL WHEN IT HAD HAPPENED. THIS SUDDEN ACCELERATION OCCURRED ONCE BEFORE. HAD SURGING PROBLEM REPAIRED IN MARCH 2000. SUBMITTED A PREVIOUS COMPLAINT 1000294, AND WAS INFORMED TO RESUBMIT COMPLAINT TO THE HOT LINE FROM NHTSA'S ENGINEER - S. YOUNG.*AK
Additional Summary:

Toyota ID No:
NHTSA ODI No: 10074464
Date of Incident: 0
Vehicle: 2003 TOYOTA CAMRY
Location of Incident: SYOSSET, NY
NHTSA Summary:
CONSUMER COMPLAINED ABOUT A SUDDEN ACCELERATION PROBLEM. WHILE PARKING INTO A SPACE, AT A SCHOOL VEHICLE SURGED AND LUNGED FORWARD WHILE CONSUMER'S FOOT WAS STILL ON THE BRAKES. *AK
Additional Summary:

Toyota ID No:
NHTSA ODI No: 10074487
Date of Incident: 0
Vehicle: 2002 TOYOTA CAMRY
Location of Incident: HARRISBURG, PA
NHTSA Summary:
VEHICLE SUDDENLY ACCELERATED WHILE BACKING OUT OF THE DRIVEWAY. *MR THIS INCIDENT CAUSED DAMAGE TO A GARAGE, AND HIT THREE OTHER PARKED VEHICLES. THIS PROBLEM RECURRED ON THREE OTHER OCCASIONS. CURRENTLY THE GEARSHIFT BEGAN TO GIVE THE CONSUMER PROBLEMS. *BC
Additional Summary:

Toyota ID No: 2002083000449
NHTSA ODI No:
Date of Incident: 0
Vehicle: 2002 TOYOTA, LEXUS CAMRY
Location of Incident: DEERFIELD BEACH, FL
NHTSA Summary:

*** PROBE LOG 08/30/2002 09:21:50 AM CWILSON
====PCRP====
SET OWNS VEH. VIN 4T1BB12EXY3337298 MILEAGE UNK. SET DISTRIBUTION SR. CLAIMS ANALYST JOHN RAMONDETTA AT (954)428-4734 CALLED CAC TO INFORM THAT MR. CASSIDY INDICATED WHILE PARKING VEH IT LURCHED FORWARD STRIKING A PEDESTRIAN CAUSING SERIOUS INJURY TO A KIM SHIPE THE PEDESTRIAN. DRIVER-TRUST DAVID E. CASSIDY IS DECEASED. FOR NOW USING CLAIMS REP JOHN RAMONDETTA AT (954)428-4734 AS CONTACT PERSON.
LEGAL REQUESTS FORP WITH MANY INTERIOR AND EXTERIOR PHOTOS
*** NOTES 09/04/02 10:23:34 AM NY4
CASE DISPATCHED TO HANNA DIVER
*** NOTES 09/04/2002 11:43:26 AM MCOLE
JOHN RAYMONDETTA - SET CALLED TO UPDAT VEH LOCATION.
CURRENT VEHICLE LOCATION:
161 SOUTH MAIN ST
EAST WINDSOR, CT 06088
TEL: 860-292-7508
ASK FOR MARY
*** NOTES 09/04/2002 11:45:44 AM MCOLE
JOHN RAYMONDETTA - SET REQUEST EITHER DESIGN OR INSPECTOR CONTACT HIM AT (954) 428-4734. STS THEY WILL NEED A REPORT W/ THE FINDINGS (CONCERNED THAT THERE MAY BE A PRODUCT LIABILITY LEGAL ISSUES).
*** NOTES 09/04/02 01:06:36 PM NY4
CASE ASSIGNED TO FTS M MARSNICK. ADVISED FTS TO CONTACT J RAMONDETTA AFTER INSPECTION IS COMPLETED.

*** CASE CLOSE 10/03/02 06:55:07 AM NY4
RECEIVED CALL FROM SETH IN SET. THEY HAVE RECEIVED INFORMATION FROM FTS MIKE MARSNICK. CASE CAN BE CLOSED.
FTS INSPECTED VEHICLE ON 09/19/2002.
Additional Summary:

Toyota ID No:
NHTSA ODI No: 10029427
Date of Incident: 0
Vehicle: 2003 TOYOTA CAMRY
Location of Incident: FRISCO, TX
NHTSA Summary:
THE LOCATION OF THE BRAKE/GAS PEDALS ARE TOO CLOSE, WHICH RESULTED IN ACCIDENTAL ACCELERATION WHILE DRIVING.*AK
Additional Summary:

Toyota ID No:
NHTSA ODI No: 10026512
Date of Incident: 0
Vehicle: 2003 TOYOTA CAMRY
Location of Incident: HATTIESBURG, MS
NHTSA Summary:
THE VEHICLE EXPERIENCED BRAKE PROBLEMS AND WHILE DRIVING, THE CONSUMER APPLIED THE BRAKES, BUT IT FELT AS THOUGH HE STEPPED ON THE ACCELERATOR. *AK. *SUC. *JB
Additional Summary:

Toyota ID No:
NHTSA ODI No: 10048950
Date of Incident: 0
Vehicle: 2003 TOYOTA CAMRY
Location of Incident: NAVARRE, FL
NHTSA Summary:
ON TWO SEPARATE OCCASIONS WHILE AT A COMPLETE STOP AND ATTEMPTING TO PUT VEHICLE INTO PARK, IT SUDDENLY ACCELERATED. ON BOTH OCCASIONS, DRIVER'S FOOT WAS PRESSING ON BRAKE PEDAL. AFTER THE FAILURE OCCURRED THE SECOND TIME, AND VEHICLE FAILED TO STOP, ANOTHER VEHICLE WAS REARENDED DUE TO SUDDEN ACCELERATION. *AK
Additional Summary:

Toyota ID No:
NHTSA ODI No: 10053774
Date of Incident: 0
Vehicle: 2003 TOYOTA CAMRY
Location of Incident: IDLO, ID
NHTSA Summary:
CONSUMER COMPLAINED ABOUT AN ACCELERATION PROBLEM. VEHICLE WAS ACCELERATING WITHOUT THE USE OF THE GAS PEDAL ONCE PUT THE VEHICLE IN GEAR AND IT REVVED WITHOUT DRIVER'S ASSISTANCE. *AK
Additional Summary:

Toyota ID No:
NHTSA ODI No: 10064711
Date of Incident: 0
Vehicle: 2003 TOYOTA CAMRY
Location of Incident: MUSCALA, AL
NHTSA Summary:
WHEN ACCELERATING FROM A STOP SIGN VEHICLE SURGED FORWARD. DEALERSHIP WAS CONTACTED TWICE FOR PROBLEM, BUT COULD NOT RESOLVE THE PROBLEM.*AK
Additional Summary:

Toyota ID No:
NHTSA ODI No: 10067379
Date of Incident: 0
Vehicle: 2003 TOYOTA CAMRY
Location of Incident: FAIRHAVEN, MA
NHTSA Summary:
VEHICLE HESITATED TO ACCELERATE WHEN GAS PEDAL WAS PRESSED. ALSO, UNEXPECTED ACCELERATION OCCURRED INTERMITTENTLY.*AK
Additional Summary:

Toyota ID No:
NHTSA ODI No: 10068410
Date of Incident: 0
Vehicle: 2003 TOYOTA CAMRY

Location of Incident: SAINT LOUIS, MO
NHTSA Summary:
THE VEHICLE FAILED TO RESPOND WHEN THE DRIVER PRESSED THE BRAKE PEDAL, INSTEAD THE VEHICLE EXPERIENCED UNWANTED ACCELERATION, AND CRASHED INTO SOME BUSHES AND A CEMENT EMBANKMENT. *AK *ZB
Additional Summary:

Toyota ID No:
NHTSA ODI No:
Date of Incident: 0
Vehicle: 2004 TOYOTA CAMRY
Location of Incident: ARLINGTON, TX
NHTSA Summary:
Additional Summary:
"PRODUCTS LIABILITY/TOYOTA ACCELERATING ON ITS OWN - She has a 2004 Toyota Camry and in the last 2 months it has accelerating on its own, when she put her foot on the brake, it did not stop. She took it to the dealership and they put plastic clips to secure the floor mat in the floor and cleaned sticky residue. She wants to make sure it will not happen again. She heard a news bulletin that Toyota thinks it is not the floor mats and she is now concerned it may be something else and need someone to tell her what to do from here."

Toyota ID No:
NHTSA ODI No: 10072250
Date of Incident: 0
Vehicle: 2004 TOYOTA CAMRY
Location of Incident: MISSOURI CITY, TX
NHTSA Summary:
WHILE SHIFTING INTO REVERSE WITH FOOT DEPRESSED ON THE BRAKES VEHICLE ACCELERATED AT HIGH SPEED. AS A RESULT, VEHICLE CRASHED INTO FOUR HOUSES, INJURING SEVERAL PEOPLE, ESPECIALLY ONE PERSON IN BEDROOM. *AK
Additional Summary:

Toyota ID No:
NHTSA ODI No: 10071569
Date of Incident: 0
Vehicle: 2000 TOYOTA CAMRY SOLARA
Location of Incident: TOMS RIVER, NJ
NHTSA Summary:
VEHICLE SURGED FORWARD AFTER RELEASING THE GAS PEDAL AND HIT A TREE. *PH *ZB
Additional Summary:

Toyota ID No: 20040300217
NHTSA ODI No:
Date of Incident: 0
Vehicle: 2003 TOYOTA, LEXUS CAMRY, CAMRY SOLARA, ES300
Location of Incident: BALTIMORE, MD
NHTSA Summary:
*** PHONE LOG 03/09/2004 08:41:51 AM EMENDOZA

CUST STS WHEN BRAKES ARE PRESSED,VEH STOPS BUT THEN SURGES FORWARD A ABRUPTLY OR SLIGHTLY 8OLLS.CUST STS WATCHED NEWS ON WBAL TV NEWS IN BALTIMORE,MD AT 6:00AM TODAY 3/9/2004 BUT BUT FIRST SAW THE NEWSCAST YESTERDAY 3/8/2004 AT 10PM.CUST STS NHTSA CLAIMS I.D0 TOY VEHS MAY BE AFFECTED BY THIS PROBLEM. CUST STS NHTSA IS LOOKING INTO TOY COMPLAINTS.CUST STS SHE IS EXPERIENCING VEH SURGING FORWARD ON A OFF BUT NOT EVERY TIME THE BREAKS ARE PRESSED.CUST STS SHE FEELS SAFE.

*** CASE CLOSE 09/10/04 06:06:41 AM DLR10027
HAVE SPOKEN TO CUST. SHE HAS MADE APPT. TO BRING CAR IN FOR US TO LOOK AT. CUST UNDERSTANDS THAT HER PROBLEM MAY NOT HAVE ANYTHING TO WITH WHAT SHE HEARD ON THE RADIO. PL. CL.
Additional Summary:

Toyota ID No:
NHTSA ODI No: 7361 10
Date of Incident: 0
Vehicle: 2000 TOYOTA CELICA
Location of Incident: BIRMINGHAM, AL
NHTSA Summary:
SEVERAL TIMES ACCELERATOR HAS STUCK. HAD PROBLEM FIXED AND HAS BEGUN HAPPENING AGAIN AFTER SHORT TIME (FIXED 6 MONTHS AGO).*AK
Additional Summary:

Toyota ID No:
NHTSA ODI No: 375117
Date of Incident: 0
Vehicle: 2000 TOYOTA COROLLA
Location of Incident: HORSESHOE BAY, TX
NHTSA Summary:
WHEN DRIVING 30 MPH AND UPON DEPRESSING BRAKE PEDAL TO MAKE A NORMAL STOP VEHICLE CONTINUED TO ACCELERATE WHICH CAUSED A REAR END COLLISION. VEHICLE CAUGHT ON FIRE DUE TO BATTERY LEAKING ACID. PASSENGER'S SIDE SEAT BELT DID NOT LOCK WHICH FORCED THE PASSENGER INTO THE WINDSHIELD. VEHICLE WAS A TOTAL LOSS. PLEASE PROVIDE ANY FURTHER DETAILS.*AK
Additional Summary:

Toyota ID No:
NHTSA ODI No: 8005340
Date of Incident: 0
Vehicle: 2001 TOYOTA COROLLA
Location of Incident: CAMBRIA, CA
NHTSA Summary:
WHEN TRAVELING DOWN HILL WITH THE DEALER INSTALLED CRUISE CONTROL ON, VEHICLE WILL CHUG AS IF IT IS LOSING POWER OR OUT OF GAS. ALSO, WHEN ITS RAINING WHEN VEHICLE IS TRAVELING ON AN INCLINE, TIRES WILL SPIN. CRUISE CONTROL WILL DECELERATE.*AK CONSUMER STATES HEADLIGHTS ARE ADJUSTED TOO LOW. SUSPENSION FEELING WHEN TRAVELING SLOWLY DOWN HILL. DEALER ADJUSTED THROTTLE CABLE BUT CONDITION STILL EXISTS.*YD
Additional Summary:

Toyota ID No:
NHTSA ODI No: 8098614
Date of Incident: 0
Vehicle: 2002 TOYOTA COROLLA
Location of Incident: FOUNTAIN HILL, AZ
NHTSA Summary:
WHILE TRAVELING AT 75 MPH ON CRUISE CONTROL AND WITHOUT ANY INDICATION GAS PEDAL TRAVELED TO FLOORBOARD, CAUSING VEHICLE TO ACCELERATE TO 100 MPH. CONSUMER PUSHED CLUTCH TO STOP VEHICLE. VEHICLE WAS STILL IDLING HIGH AFTER VEHICLE WAS STOPPED. *AK THE CONSUMER STATED THAT THE PROBLEM WAS THE ACCELERATOR JAMMED OPEN AND TURNING OFF. ALSO, THE CRUISE CONTROL WOULD NOT RETURN ENGINE TO NORMAL IDLING. *YH
Additional Summary:

Toyota ID No:
NHTSA ODI No: 10016601
Date of Incident: 0
Vehicle: 2000 TOYOTA COROLLA
Location of Incident: EUREKA, OH
NHTSA Summary:
CONSUMER STATES WHILE AT A COMPLETE WITHOUT ANY INDICATION VEHICLE ACCELERATED CAUSING CONSUMER TO LOOSING CONTROL OF VEHICLE RESULTING INTO A VEHICLE CRASH. PLEASE PROVIDE FURTHER INFORMATION.
Additional Summary:

Toyota ID No:
NHTSA ODI No: 10061755
Date of Incident: 0
Vehicle: 2000 TOYOTA COROLLA
Location of Incident: TEANECK, NJ
NHTSA Summary:
CONSUMER COMPLAINED ABOUT AN INTERMITTENT ACCELERATION PROBLEM. VEHICLE DID NOT STOP WHEN APPLYING THE BRAKES. CONSUMER HAD TO TURN OFF THE IGNITION FOR THE VEHICLE TO STOP. CONSUMER TOOK THE VEHICLE TO THE DEALER, AND DEALER WAS UNABLE TO DUPLICATE OR RESOLVE THE PROBLEM. *AK
Additional Summary:

Toyota ID No:
NHTSA ODI No: 10062314
Date of Incident: 0
Vehicle: 2000 TOYOTA COROLLA
Location of Incident: PEARL RIVER, NY
NHTSA Summary:
WHEN APPLYING THE BRAKES VEHICLE SUDDENLY ACCELERATED. *AK
Additional Summary:

Toyota ID No:
NHTSA ODI No: 764271
Date of Incident: 0
Vehicle: 2002 LEXUS ES300
Location of Incident: LEXINGTON, SC

NHTSA Summary:
WE HAVE A SURGE OR SKIP ON DEACCELERATION.THIS WILL HAPPEN FROM 40 TO 60 MPH. THE DEALER WILL ONLY TELL US THEY ARE AWARE OF THE PROBLEM BUT HAVE NO CURE. I FEEL THAT AFTER 7 MONTHS THEY SHOULD HAVE A FIX.*AK
Additional Summary:

Toyota ID No:
NHTSA ODI No: 10063306
Date of Incident: 0
Vehicle: 2002 LEXUS GS300
Location of Incident: NEW HAVEN, CT
NHTSA Summary:
WHEN PRESSING THE BRAKE PEDAL, THE VEHICLE WOULD INTERMITTENTLY LURCH FORWARD. THE DEALER COULD NOT DETERMINE THE CAUSE OF THE PROBLEM. *AK *SC *JB
Additional Summary:

Toyota ID No:
NHTSA ODI No: 10007439
Date of Incident: 0
Vehicle: 2003 LEXUS GS300
Location of Incident: COLLIERVILLE, TN
NHTSA Summary:
WHILE DRIVING 90 MPH VEHICLE SUDDENLY ACCELERATED. CONSUMER APPLIED THE BRAKES AND VEHICLE JERKED. VEHICLE WAS TAKEN TO THE DEALER FOR INSPECTION, AND MECHANIC WAS NOT ABLE TO DUPLICATE OR RESOLVE THE PROBLEM. *AK
Additional Summary:

Toyota ID No:
NHTSA ODI No: 516440
Date of Incident: 0
Vehicle: 1999 LEXUS GS400
Location of Incident: WASHINGTON, DC
NHTSA Summary:
VEHICLE EXPERIENCES DELAYED ACCELERATION DUE TO DESIGN. VEHICLE HAS AN ACTUATOR RATHER THAN A THROTTLE CABLE. YH
Additional Summary:

Toyota ID No:
NHTSA ODI No: 10005032
Date of Incident: 0
Vehicle: 2001 LEXUS IS300
Location of Incident: SKOKIE, IL
NHTSA Summary:
INTERMITTENTLY WHEN ACCELERATOR PEDAL IS DEPRESSED IT STICKS. WHEN THIS OCCURS VEHICLE ACCELERATES AT A HIGH SPEED. THE BRAKE PEDAL FAILS TO STOP THE ACCELERATION. IGNITION HAS TO BE TURNED OFF TO STOP THE ACCELERATION. VEHICLE HAD BEEN SERVICED SEVERAL TIMES BY THE DEALERSHIP, BUT WAS NOT ABLE TO RESOLVE THE PROBLEM. *AK
Additional Summary:

Toyota ID No:
NHTSA ODI No:
Date of Incident: 0
Vehicle: 2004 LEXUS LEXUS
Location of Incident: -
NHTSA Summary:
Additional Summary:
I own a 2004 lexus, have experienced *Ba stock gas pedal twice,
my car is not part of the recal. What
can I do. The dealer denies the problem.

Toyota ID No:
NHTSA ODI No:
Date of Incident: 0
Vehicle: 2002 LEXUS LEXUS
Location of Incident: SHAVERTOWN, PA
NHTSA Summary:
Additional Summary:
Start: Friday, January 22, 2010 12:07 PM
Subject: Lexus Story on WNEP last night
Date: I had a similar experience as your lady from Scranton with my 2002 Lexus. I would like to give you my complete experience with Toyota. I'm not looking for publicity but I have hired an attorney and we are exploring various options.

Toyota ID No:
NHTSA ODI No: 10068727
Date of Incident: 0
Vehicle: 2001 LEXUS LS470
Location of Incident: OAKTON, VA
NHTSA Summary:
WHEN SHIFTING INTO DRIVE VEHICLE JERKED WHEN THE ACCELERATOR PEDAL WAS DEPRESSED. THEN, VEHICLE SURGED ERRATICALLY, AND CAUSED THE CONSUMER TO RUN INTO A PARKED VEHICLE.*AK
Additional Summary:

Toyota ID No:
NHTSA ODI No: 10062881
Date of Incident: 0
Vehicle: 2003 TOYOTA MATRIX
Location of Incident: ORANGE, CA
NHTSA Summary:
WHEN AT A STOP SIGN OR WHEN PLACING VEHICLE IN REVERSE ENGINE WILL RACE AND VEHICLE WILL UNEXPECTEDLY ACCELERATE OUT OF CONTROL. *AK. ENGINE INTERMITTENTLY IDLE UP TO ABOUT 1,000 RPM REGARDLESS OF TEMPERATURE. CAUSE NOT YET DETERMINED. PROBLEM IS SIMILAR TO PE04021. *LA
Additional Summary:

Toyota ID No:

NHTSA ODI No: 10026336
Date of Incident: 0
Vehicle: 2003 TOYOTA PRIUS
Location of Incident: PALO ALTO, CA
NHTSA Summary:
CONSUMER WAS TRAVELING AT 70MPH ON HIGHWAY WITH CRUISE CONTROL ENGAGED. WHEN DEPRESSING BRAKE PEDAL TO DISENGAGE CRUISE CONTROL THE VEHICLE SPUN OUT AND STOPPED FACING THE ONCOMING TRAFFIC.*AK
Additional Summary:

Toyota ID No:
NHTSA ODI No: 758187
Date of Incident: 0
Vehicle: 2004 TOYOTA RAV4
Location of Incident: BOURBONNAIS, IL
NHTSA Summary:
THE VEHICLE DOESN'T RESPOND TO THROTTLE PRESSURE AND TRANSMISSION DOESN'T SHIFT DOWN PROPERLY. THIS IS NOTICED AS A HESITATION. WHEN THE TRANSMISSION FINALLY DOWN SHIFTS IT SHIFTS ALL THE WAY TO FIRST GEAR, THEN ROARS FOR A FEW SECONDS, THEN SHIFTS QUICKLY.
Additional Summary:

Toyota ID No:
NHTSA ODI No: 757810
Date of Incident: 0
Vehicle: 2003 TOYOTA RAV4
Location of Incident: COLUMBUS, OH
NHTSA Summary:
RE: FUEL THROTTLE LINKAGE FAILURE: HIGH IDLE SPEED, UNPREDICTABLE IDLE SPEED OSCILLATION / SURGES, UNPREDICTABLE ACCELERATION / DECELERATION (PARTICULARLY WHEN ENGINE IS COLD). CAR WILL SOMETIMES FAIL TO DECELERATE AFTER TAKING FOOT OFF GAS WHEN AT LOW SPEEDS (10-25 MPH), FOR EXAMPLE, WHEN TURNING A CORNER OR DRIVING DOWN A RESIDENTIAL STREET. THIS MANUAL TRANSMISSION CAR WILL SOMETIMES DRIVE/LURCH FORWARD ON ITS OWN WITHOUT PRESSING ON THE GAS PEDAL WHEN IN 2ND OR 3RD GEAR, ONCE RPMS DROP TO ABOUT 1700. TOLD BY THE DEALER AND TOYOTA THAT THIS IS THE RESULT OF A NEW EMISSIONS CONTROL COMPUTER, AND THAT THE CAR IS OPERATING AS DESIGNED. RE: STRUCTURE - ROOF RACK: PIECE OF THE COVERING TO THE ROOF RACK FELL OFF WHEN DRIVING DOWN THE FREEWAY. COULD HAVE BEEN DANGEROUS IF THERE WOULD HAVE BEEN A CAR DRIVING BEHIND ME AT THE TIME.*AK
Additional Summary:

Toyota ID No:
NHTSA ODI No: 10011770
Date of Incident: 0
Vehicle: 2002 TOYOTA RAV4
Location of Incident: CHICAGO, IL
NHTSA Summary:
VEHICLE ACCELERATES ON ITS OWN.
Additional Summary:

Toyota ID No:
NHTSA ODI No: 10091251
Date of Incident: 0
Vehicle: 2003 TOYOTA RAV4
Location of Incident: CAPE CANAVERAL, FL
NHTSA Summary:
CONSUMER STATED THE VEHICLE THAT HE PURCHASED DID NOT COME EQUIPPED WITH CRUISE CONTROL. TO THE DEALER OFFERED TO ADD IT, IT WAS SOON DISCOVERED THAT THE CRUISE CONTROL WAS FAULTY. WHEN THE CRUISE CONTROL IS ACTUATED TO MAINTAIN A CERTAIN SPEED, IN ORDER TO STAY WITH THE FLOW OF TRAFFIC THE VEHICLE ACCELERATES 3-4 MPH ABOVE THE DESIRED SPEED THEN DROPS BACK 3-4 MPH BELOW THE DESIRED SPEED, THEN SLOWLY MOVES UP TO THE DESIRED SPEED. THE SECOND CRUISE CONTROL WAS INSTALLED AND ACTED EXACTLY AS THE FIRST. IN THE END THE CONSUMER WAS INFORMED THAT THE UNIVERSAL CRUISE CONTROL WAS NOT COMPATIBLE WITH THE CONSUMERS VEHICLE AND IF A UNIT BECAME AVAILABLE THE DEALER WOULD INSTALL THE NEW UNIT.*JB
Additional Summary:

Toyota ID No:
NHTSA ODI No:
Date of Incident: 0
Vehicle: 2009 LEXUS RX450H
Location of Incident: -
NHTSA Summary:
Additional Summary:
We thought that you might be interested to the fact that our Lexus RX450H hybrid (2009 model year) had the same problem with sudden acceleration several months ago. We were pulling into a parking place and were almost in the curb when the car suddenly re

---

Toyota ID No:
NHTSA ODI No:
Date of Incident: 0
Vehicle: 2005 TOYOTA SIENNA
Location of Incident: SANTA BARBARA, CA
NHTSA Summary:
2005 TOYOTA SIENNA - SUA - CRUSHED BETWEEN 2 CARS - PUSHED A NISSAN 300Z 6 FEET. DAUGHTER GOT INTO THE CR TO BACK IT OUT OF THE DRIVEWAY. RACED FORWARD. CARPETED FLOOR MAT ONLY. MOTHER WAS CRUSHED BETWEEN THE VEHICLES. TWO OFF SEER DAUGHTER WAS AT FAULT. MONTHS LATER MOTHER WAS DRIVING AND IT RUN'D HOME. TRADED IN FOR A PRIUS.
K-ellys@cebastian.tcoh.edu
Additional Summary:

Toyota ID No:
NHTSA ODI No: 9001115
Date of Incident: 0
Vehicle: 2000 TOYOTA TUNDRA
Location of Incident: CALHOUN, LA
NHTSA Summary:
CRUISE CONTROL, DOWNSHIFT TO PASSING GEAR, RAPIDLY, CAUSING EXCESSIVE SPEED TO ACCELERATE 5 MILES PAST SETTING.
Additional Summary:

Safety Research & Strategies, Inc.
340 Anawan Street / Suite 200
Rehoboth, MA 02769
Ph. 508-252-2333, Fax 508-252-3137
www.safetyresearch.net

Appendix B: ***A Sampling of Incidents of Unintended Acceleration in Recalled Vehicles not Explained by Pedal and Mat Failures***

The attached appendix is comprised of a sampling consumer complaints to NHTSA of unintended acceleration incidents occurring in recalled vehicles that are characterized by failure modes that appear to be outside of the scope of the floor mat and accelerator pedal recalls. Sources for these incidents include:

- Consumer complaints to NHTSA
- Toyota-submitted claims from several NHTSA investigations into SUA
- Incidents reported by media organizations
- Consumer contacts made to Safety Research & Strategies, Inc., and other organizations who are reporting incidents that they have received.

Toyota ID No:
NHTSA ODI No: 10141756
Date of Incident: 20061123
Vehicle: 2007 TOYOTA AVALON
Location of Incident: -
NHTSA Summary:
NOV 23, 2006: IN REPOSITIONING MY 2007 AVALON XLS IN THE DRIVEWAY OF MY SISTER'S HOUSE, I SLOWLY PULLED FORWARD TO RE-PARK AND APPLIED THE BRAKES TO STOP AND THE ACCELERATOR IMMEDIATELY WENT TO HIGH RPMS - I HAD TO BRAKE VERY HARD TO KEEP FROM HITTING MY BROTHER-IN-LAW AND HIS HOUSE. I WAS BRAKING - AND TURNED OFF THE IGNITION. ON DEC 22, 2006 THE SAME PROBLEM OCCURRED TWO BLOCKS IN A ROW IN OUR CONGESTED DOWNTOWN AREA. THE 1ST TIME, I WAS STOPPING VERY SLOWLY. THE SECOND TIME I WAS BRAKING TO WAIT FOR A PARKING SPACE. THE 1ST TIME I TRIED CHANGING GEARS AND THEN TURNED OFF THE IGNITION. THE SECOND TIME I IMMEDIATELY TURNED OFF THE IGNITION. MY WIFE WAS A WITNESS. I DROVE THIS CAR FOR THE MONTH AFTER IT'S PURCHASE NEW (SEP 6, 2006). EVERY INSURED DAY FOR THE MONTH OF OCT 2006, AND OFTEN DURING NOV 2006 WITHOUT THIS PROBLEM. I TOLD THE LOCAL/DISTRICT TOYOTA PERSONNEL THAT I COULD NOT TRUST THIS PARTICULAR VEHICLE. IT HAS BEEN PARKED EITHER AT THE DEALERSHIP OR IN MY GARAGE ALMOST EVERY DAY SINCE DEC 24, 2006. THE DISTRICT TOYOTA PERSONNEL SAID THAT THEY DID NOT CONSIDER MY CAR UNSAFE BECAUSE THEY COULD NOT FIND ANY ERROR CODES IN THE CAR'S SYSTEM, AND ON THE 162 MILE TEST DRIVE THEY DID, WITHOUT ME PRESENT. THEY DID NOT EXPERIENCE MY PROBLEM. THEY DID SIMULATE IT BY STEPPING ON THE BRAKE AND ACCELERATOR AT THE SAME TIME!!! I WAS ON THE HIGHEST ALERT THE SECOND TIME IT HAPPENED ON DECEMBER 23RD! MY FOOT WAS NOT ON THE ACCELERATOR; I WAS BRAKING ALL THREE TIMES - OR, ELSE MY BROTHER-IN-LAW WOULD HAVE BEEN INJURED, HIS HOUSE DAMAGED, AND CARS DOWNTOWN HIT. I RESENT THE INSINUATION THAT I WAS PRESSING BOTH PEDALS ALL THREE TIMES. NO EXPLANATION WHY I HAD NOT EXPERIENCED THIS PROBLEM IN THE NEARLY THREE MONTHS (WITH THE SAME SHOES ON) BEFORE THE PROBLEM FIRST AROSE. TOYOTA CLOSED MY PROBLEM REPORT AS SOLVED!! EVEN THOUGH THE LOCAL SERVICE MANAGER STATED HE DID NOT CONSIDER IT SOLVED! WHY? *SM
Additional Summary:

Toyota ID No:
NHTSA ODI No: 10292580
Date of Incident: 20070514
Vehicle: 2005 TOYOTA PRIUS
Location of Incident: BAKERSFIELD, CA
NHTSA Summary:
TL*THE CONTACT OWNS A 2005 TOYOTA PRIUS. WHILE DRIVING APPROXIMATELY 70 MPH WITH THE OVER DRIVE SYSTEM ACTIVATED, THE VEHICLE ACCELERATED WITHOUT WARNING WHEN BRAKES WERE ENGAGED. IMMEDIATELY, THE OVERDRIVE CONTROL SWITCH WAS DEACTIVATED AND THE VEHICLE SLOWED DOWN. THE CONTACT WAS ABLE TO RESUME NORMAL OPERATION. THE FAILURE RECURRED AND HAS NOT BEEN REPAIRED. THE CONTACT HAD CONCERNS OF THE SAFETY RISK INVOLVED. THE VIN WAS UNAVAILABLE. THE FAILURE AND CURRENT MILEAGES WERE 41,000.
Additional Summary:

Toyota ID No:
NHTSA ODI No: 10281854
Date of Incident: 20080319
Vehicle: 2007 TOYOTA TACOMA

Location of Incident: PHILADELPHIA, PA
NHTSA Summary:
SUDDEN ACCELERATION OF MY 2007 TACOMA, MORE THEN ONCE WHEN I CAME TO A STOP. THE TRUCK WOULD SUDDENLY ACCELERATE. IT HAPPENED AT A STOP JUST BEFORE MY ACCIDENT AND A SCHOOL BUS WAS GOING THROUGH THE INTERSECTION. WHEN I GOT OUT OF MY TRUCK AT A PUBLIC STORAGE GATE A MINUTE LATER AND GOT BACK IN AND WAITED FOR THE GATE TO OPEN I SUDDENLY HAD A UNINTENDED ACCELERATION OF MY 2007 TOYOTA TACOMA. WHEN I HIT THE BREAK IT WENT FASTER. I HAD TO PUT IT IN PARK TO STOP THE RACE WHEELS FROM SPINNING. THE GATE WAS TOTALED FROM MY TRUCK. I WAS NOT EVEN DRIVING AND IT TOOK OFF ON ITS OWN! I HAD TOYOTA INSPECT IT AND THEY COULD NOT FIND ANYTHING WRONG. I HAVE NOT HAD ANY ACCIDENTS FOR 20 YEARS. NOW MY INSURANCE RATES ARE HIGH. PLEASE INVESTIGATE THIS. IS IS NOT A WRONG PEDDLE PROBLEM. IT ALSO HAPPENED ONCE BEFORE AND I HAD LESS THEN 1000 MILES ON THE TACOMA, BUT THE ROAD WAS WET SO I WAS NOT SURE IF IT WAS THE ROAD. IT WAS LESS THEN A YEAR OLD WHEN IT HAPPENED AGAIN. AND I WAS GONE TO TAKE IT TO THE DEALER AFTER I ALMOST HIT THE SCHOOL BUS, BUT DIDNT GET THE CHANCE. I HAD TO STOP AT THE STORAGE PLACE AND THAT WAS WHERE I RAN INTO THE GATE. I SINCE HAD A VOLUNTARY RECO AND GAVE IT BACK. I WOULD NOT DRIVE IT AND FEEL SAFE AGAIN. *TR
Additional Summary:

Toyota ID No:
NHTSA ODI No: 10322461
Date of Incident: 20080322
Vehicle: 2004 TOYOTA PRIUS
Location of Incident: SALT LAKE CITY, UT
NHTSA Summary:
CAR ACCELERATED WITHOUT PRESSING ON THE GAS PEDAL. HAD TO APPLY THE BRAKES SO HARD THAT THEY WERE LEFT SMOKING TO STOP THE CAR. TOWED IT TO MARK MILLER TOYOTA. THEY RAN TESTS AND CLAIM THE GAS PEDAL AND BRAKE WERE APPLIED AT THE SAME TIME. IMPLYING THAT THE PROBLEM WAS HUMAN CAUSED. WE DISAGREE. HAVE BEEN DRIVING FOR 30 YEARS PLUS. NO TICKETS IN DECADES. THE IDEA THAT WE WERE APPLYING THE ACCELERATOR WHILE BRAKING HARD IS LUDICROUS. THE COMPUTER REGISTERED THAT THE PRESSURE WAS APPLIED TO THE PEDAL, BUT THE COMPUTER APPLIED THE PRESSURE. WE ALSO EXPERIENCED THIS OCCURRING ON AT LEASY TWO OTHER OCCASIONS. *TR
Additional Summary:

Toyota ID No:
NHTSA ODI No: 10336316
Date of Incident: 20080421
Vehicle: 2008 TOYOTA HIGHLANDER
Location of Incident: PHOENIX, AZ
NHTSA Summary:
IN FEBRUARY 2008, I PURCHASED A 2008 TOYOTA HIGHLANDER. ON TWO SEPARATE OCCASIONS SINCE PURCHASING THE VEHICLE, WHEN SLOWLY PULLING INTO A PARKING SPACE THE VEHICLE UNEXPECTEDLY ACCELERATED. ON THE FIRST OCCASION (APRIL 2008), THE INCIDENT ENDED IN AN ACCIDENT AS THE VEHICLE SLAMMED INTO A WALL. THE SECOND INCIDENCE OCCURRED APPROXIMATELY 3 MONTHS LATER AND NEARLY CAUSED ANOTHER ACCIDENT. AGAIN, AS I WAS PULLING INTO A PARKING SPACE THE VEHICLE UNEXPECTEDLY ACCELERATED. HOWEVER, THE VEHICLE WAS STOPPED BY A PARKING PYLON BEFORE HITTING A WALL. I HAVE HAD THE VEHICLE INSPECTED BY THE LOCAL DEALERSHIP AND THEY CLAIM THAT THEY CAN NOT FIND ANY ISSUES WITH

VEHICLE. BASED ON MY RESEARCH, THIS DOES NOT APPEAR TO BE AN ISOLATED PROBLEM AS OTHER TOYOTA VEHICLES ARE NOTED AS HAVING THE SAME ISSUE. I FEEL THAT THIS VEHICLE IS THREAT NOT ONLY TO THE SAFETY OF MY FAMILY, BUT TO OTHERS ON THE ROAD. UPDATED 080808. *JB
Additional Summary:

Toyota ID No:
NHTSA ODI No: 10285017
Date of Incident: 20081120
Vehicle: 2006 TOYOTA TACOMA
Location of Incident: WEATHERFORD, TX
NHTSA Summary:
TL*THE CONTACT OWNS A 2006 TOYOTA TACOMA. WHILE ATTEMPTING TO PARK WITH THE BRAKE PEDAL DEPRESSED, THE VEHICLE SUDDENLY LUNGED FORWARD INTO A BUILDING. THE AIR BAGS FAILED TO DEPLOY. THE CONTACT AND PASSENGER WERE UNINJURED AND BOTH WERE WEARING THEIR SEAT BELTS. THE FRONT BUMPER AND GRILL WERE SMASHED INTO THE VEHICLE. A POLICE REPORT WAS FILED. THE CONTACT WAS ABLE TO DRIVE AWAY FROM THE SCENE. THE SPEED WAS UNKNOWN. THE FAILURE MILEAGE WAS 31,711.
Additional Summary:

Toyota ID No:
NHTSA ODI No: 10253126
Date of Incident: 20090101
Vehicle: 2006 TOYOTA TACOMA
Location of Incident: SALEM, VA
NHTSA Summary:
WHILE ATTEMPTING TO STOP AT THE END OF A PARKING LOT, THE ENGINE ACCELERATED. THE VEHICLE LURCHED FORWARD RAPIDLY, COULD NOT BE STOPPED BY BRAKING. THE VEHICLE BURSTED OVER A CURB, SHRUBS, AND THROUGH A CHAIN LINK FENCE BEFORE IT WAS ABLE TO BE STOPPED. THIS IS THE SECOND TIME THIS HAS OCCURRED. THE FIRST INCIDENT DID NOT RESULT IN ANY DAMAGE. SINCE THE INCIDENT OCCURRED THIS EVENING NO CORRECTIVE MEASURE HAS YET BEEN TAKEN. *TR
Additional Summary:

Toyota ID No:
NHTSA ODI No: 10292480
Date of Incident: 20090913
Vehicle: 2007 TOYOTA CAMRY
Location of Incident: MARTINEZ, GA
NHTSA Summary:
TL*THE CONTACT OWNS A 2007 TOYOTA CAMRY. WHILE APPROACHING A RED TRAFFIC LIGHT THE VEHICLE SUDDENLY BEGAN TO ACCELERATE ON ITS ON; HOWEVER, SHE WAS ABLE TO CONTROL THE VEHICLE. THE FAILURE OCCURRED ON TWO OCCASIONS. THE CURRENT AND THE FAILURE MILEAGES WERE 115,000.
Additional Summary:

Toyota ID No:
NHTSA ODI No: 10285972
Date of Incident: 20090925

Vehicle: 2009 TOYOTA AVALON
Location of Incident: BANNING, CA
NHTSA Summary:
GOING VERY SLOWLY AND HEADING INTO A CURB IN A PARKING LOT, I STEPPED ON THE BRAKE, AND INSTEAD THE CAR ACCELERATED AND STOPPED ONLY WHEN IT HIT A LIMB OF A LARGE BUSH. IT LEFT A DENT IN MY FRONT BUMPER. THIS HAS HAPPENED ONLY ONE TIME. *TR
Additional Summary:

Toyota ID No:
NHTSA ODI No: 10299642
Date of Incident: 20090718
Vehicle: 2009 TOYOTA CAMRY
Location of Incident: SIDNEY, NY
NHTSA Summary:
TL*THE CONTACT OWNS A 2009 TOYOTA CAMRY. SHE STATED THAT WHILE DRIVING 15 MPH AND MAKING A LEFT TURN, THE VEHICLE ACCELERATED AND CRASHED INTO A CURB ON HER EMBANKMENT. THE CONTACT SUSTAINED MAJOR INJURIES AND A BROKEN ANKLE. THE VEHICLE WAS TOWED. THE VEHICLE WAS REPAIRED. THE DEALER WHERE THE CONTACT PURCHASED THE VEHICLE WAS NOTIFIED AND THEY STATED THAT THEY WOULD REPORT IT TO TOYOTA. THE CONTACT HAS NOT DRIVEN THE VEHICLE SINCE THE CRASH OCCURRED. THE FAILURE AND CURRENT MILEAGES WERE 6975.
Additional Summary:

Toyota ID No:
NHTSA ODI No: 10278567
Date of Incident: 20090725
Vehicle: 2007 LEXUS ES350
Location of Incident: NORTH HAVEN, CT
NHTSA Summary:
TL*THE CONTACT OWNS A 2007 LEXUS ES350. THE CONTACT STATED THAT THE VEHICLE ACCELERATES WITHOUT WARNING. SHE STATED THAT THE ENGINE MADE A SQUEALING NOISE WHEN SHE PRESSED THE PUSH TO START BUTTON. SHE DEPRESSED THE BRAKE PEDAL, PLACED THE VEHICLE INTO REVERSE, AND THE VEHICLE SPED UP AND WOULD NOT STOP. SHE DEPRESSED THE BRAKE PEDAL WITH ALL OF HER STRENGTH, BUT THE VEHICLE WOULD NOT STOP. IT FINALLY CAME TO A STOP WHEN IT STRUCK THE SIDE OF A GARAGE. THE CONTACT WAS BRUISED AND STARTLED. A POLICE REPORT WAS FILED. THE SPEED WAS UNKNOWN. THE FAILURE MILEAGE WAS 29,000.
Additional Summary:

Toyota ID No:
NHTSA ODI No: 10299727
Date of Incident: 20090726
Vehicle: 2010 TOYOTA CAMRY
Location of Incident: NORWALK, CT
NHTSA Summary:
TL*THE CONTACT OWNS A 2010 TOYOTA CAMRY. WHILE DRIVING APPROXIMATELY 5 MPH INTO A PARKING SPACE THE VEHICLE SUDDENLY ACCELERATED WITHOUT WARNING CAUSING THE VEHICLE TO CRASH INTO A BUILDING. THE CONTACT WAS NOT INJURED. A POLICE REPORT WAS FILED. THE VEHICLE WAS TAKEN TO THE DEALER AND

THE CONTACT WAS INFORMED THAT THE FAILURE COULD NOT BE REPRODUCED. THERE WERE NO PRIOR WARNINGS. THE CURRENT AND FAILURE MILEAGES WERE 200.
Additional Summary:

Toyota ID No:
NHTSA ODI No: 10279936
Date of Incident: 20090802
Vehicle: 2009 TOYOTA CAMRY
Location of Incident: NORTH TONWANDA, NY
NHTSA Summary:
TOYOTA CAMRY 2009 - WHILE DRIVING ON THE HIGHWAY THE CAR SUDDENLY ACCELERATED FROM 60MPH TO 90MPH WITHOUT EVEN TOUCHING THE GAS PEDDLE. IT WAS STUCK THROTTLE. WHEN TRYING TO STOP IT BECAME VERY DIFFICULT FOR THE BRAKES TO DEPRESS. HAD TO PUSH DOWN ON BRAKES VERY HARD TO GET IT TO SLOW DOWN. THE NEXT DAY DRIVING ON A LOCAL STREET I PULLED OUT OF MY STREET AND STARTED TO ACCELERATE AND THE IT JUST ACCELERATED OUT OF CONTROL, GOING 70/80 40MPH TO 50MPH. TRIED THE BRAKES AND THEY FELT LIKE THEY WEREN'T WORKING UNTIL YOU HAD TO STEP ON THEM ALL THE WAY. THAT WAS TWO DAYS IN A ROW THAT THIS HAPPEN. TOOK INTO THE DEALERSHIP AND THEY SAID THEY COULDN'T FIND ANYTHING WRONG WITH THE CAR OR DUPLICATE THE PROBLEM. I HAVE RESEARCHED THIS ISSUE AND HAVE FOUND THAT THERE IS A LOT OF COMPLAINTS OF THIS VERY SAME PROBLEM. SOMETHING NEEDS TO GET DONE OR THERE WILL BE A LOT OF ACCIDENTS. *TR
Additional Summary:

Toyota ID No:
NHTSA ODI No: 10290359
Date of Incident: 20090803
Vehicle: 2008 TOYOTA TUNDRA
Location of Incident: GLASGOW, KY
NHTSA Summary:
WAS RETURNING HOME VIA THE INTER-STATE FROM TN; WE ENTERED TO REFUEL. I FILLED THE TRUCK UP AT A SHELL STATION AS WE WERE LEAVING THE PUMPS I STARTED MY TUNDRA. PLACED MY FOOT ON THE BRAKE TO PLACE IT INTO GEAR AND SUDDENLY WITHOUT WARNING AFTER PLACING THE VEHICLE INTO DRIVE IT TOOK OFF JUST LIKE I HAD PRESS THE ACCELERATOR IT ALTHOUGH I HAD NOT EVEN PLACED MY FOOT ON THE GAS PEDAL. I IMMEDIATELY DEPRESSED THE BRAKE AS FORCEFULLY AS I COULD THE VEHICLE KEPT ACCELERATING I PLACED THE VEHICLE INTO NEUTRAL WITH THE ENGINE STILL REVVING LIKE THE GAS PEDAL WAS STILL BEING DEPRESSED. I THEN TURNED OFF THE KEY. THIS WAS THE FIRST AND ONLY TIME I HAD EXPERIENCED ANY SUCH PROBLEM SINCE PURCHASING THIS VEHICLE. SO FAR NOTHING HAS BEEN DONE TO THE VEHICLE IN RELATION TO THIS PROBLEM. *TR
Additional Summary:

Toyota ID No:
NHTSA ODI No: 10291915
Date of Incident: 20090806
Vehicle: 2007 TOYOTA CAMRY
Location of Incident: FAYETTEVILLE, AR
NHTSA Summary:
THERE HAS BEEN 2 OCCASIONS THAT MY CAR HAS ACCELERATED RAPIDLY WHILE DRIVING WITH THE CRUISE CONTROL ON. THE SPEED WAS SET AT 75MPH. MY FOOT WAS

NOT TOUCHING THE FOOT PEDAL NOR WAS THE FLOOR MAT. IN BOTH INSTANCES I WAS MAKING A CURVE IN THE ROAD WHEN IT HAPPENED. ON ONE OF THE TWO OCCASIONS I RECEIVED A SPEEDING TICKET TOTALING ARSOUND 390.00. THE CAR HAD ACCELERATED TO 95 BEFORE I REGAINED CONTROL. ANOTHER PROBLEM I HAVE NOTICED WITH THE VEHICLE IS WHEN TRAVELING AT SLOW RATES OF SPEED (IN 3RD GEAR AFTOMATIC), THE CAR WILL SPOKADICALLY HAVE POWER SURGES AND JOLT FORWARD. I HAVE HAD THE VEHICLE SINCE JAN. 09 AND THE PROBLEMS DESCRIBED ABOVE HAVE ONLY HAPPENED 2-3 TIMES EACH. I HAVE NOT CONTACTED ANY REPAIR CENTERS REGARDING THE ISSUES. *TR
Additional Summary:

Toyota ID No:
NHTSA ODI No: 10292360
Date of Incident: 20090807
Vehicle: 2009 LEXUS IS250
Location of Incident: WALTHAM, MA
NHTSA Summary:
I WAS PULLING INTO A PARKING SPACE WITH MY FOOT ON THE BRAKE, ALMOST TO A COMPLETE STOP WHEN THE CAR SUDDENLY ACCELERATED & I WENT UP OVER A CURB & HIT A TRANSFORMER. THE DISTANCE WAS ONLY ABOUT 8 FEET. I DO NOT KNOW HOW FAST I WAS GOING PROBABLY ABOUT 15 - 20 MPH. I MOVED THE TRANSFORMER ABOUT 3 FEET. (THE TRANSFORMER WEIGHED ABOUT 1/2 - 1 TON)*I DO NOT KNOW HOW THE CAR ACCELERATED. *TR.
Additional Summary:

Toyota ID No:
NHTSA ODI No: 10287914
Date of Incident: 20090827
Vehicle: 2006 TOYOTA AVALON
Location of Incident: MEMPHIS, TN
NHTSA Summary:
TL* THE CONTACT OWNS A 2006 TOYOTA AVALON. SHE EXPERIENCED UNINTENDED VEHICLE ACCELERATION WHEN ENTERING A PARKING SPACE, AS A CONSEQUENCE, SHE CRASHED INTO ANOTHER VEHICLE. HER KNEE WAS INJURED. THE CAUSE OF THE FAILURE WAS UNKNOWN. THE FAILURE AND CURRENT MILEAGES WERE 72,000.
Additional Summary:

Toyota ID No:
NHTSA ODI No: 10290906
Date of Incident: 20090827
Vehicle: 2009 TOYOTA CAMRY
Location of Incident: EAST FALLOWFIELD, PA
NHTSA Summary:
TL* THE CONTACT OWNS A 2009 TOYOTA CAMRY. WHILE DRIVING IN REVERSE, HIS VEHICLE ACCELERATED. AFTER REPEATED BRAKE APPLICATION, ENGAGING THE PARKING BRAKE, AND THEN TURNING THE VEHICLE OFF, THE CONTACT WAS ABLE TO DRIVE NORMALLY. THE DEALER ADVISED HIM TO REMOVE THE DRIVER-SIDE FLOOR MATS. THE FAILURE MILEAGE WAS 11,000.
Additional Summary:

Toyota ID No:

NHTSA ODI No: 10282294
Date of Incident: 20090819
Vehicle: 2008 TOYOTA TACOMA
Location of Incident: COLAOPOLIS, PA
NHTSA Summary:
2008 TOYOTA TACOMA TRD OFF-ROAD LARGE, SUDDEN, UNEXPECTED INCREASE IN ENGINE RPMS WHILE STOPPED AT A RED TRAFFIC LIGHT. I HAD JUST COME TO A COMPLETE STOP AT A RED LIGHT WHEN THE ENGINE SUDDENLY BEGAN TO ROAR. WHEN THIS HAPPENED, I WAS NOT ABLE TO KEEP THE TRUCK FROM MOVING FORWARD BY APPLYING ADDITIONAL BRAKING PRESSURE. A MAN WHO WAS ABOUT TO CROSS THE STREET IN FRONT OF THE TRUCK HEARD THE NOISE AND JUMPED BACK ONTO THE CURB TO AVOID BEING HIT. THE TRUCK PROCEEDED THROUGH THE INTERSECTION AND APPROX. ANOTHER 100 FEET BEFORE THE RPMS RETURNED TO NORMAL AND THE VEHICLE CAME TO A STOP. I WAS VERY FORTUNATE THERE WAS NO CROSS TRAFFIC AT THE TIME THIS PROBLEM OCCURRED. APPROX MILEAGE IS 38K. PLEASE NOTE THE FOLLOWING: 1 - MY FOOT WAS ON THE BRAKE, NOT THE GAS PEDAL, AND I DO NOT DRIVE UNDERNEATH FEET, AND MY SHOE SIZE IS 8. 2 - THE FLOOR MAT WAS LYING FLAT ON THE FLOOR WHEN THIS WAS HAPPENED. 3 - I AM VERY FAMILIAR WITH THE SLIGHT INCREASE IN RPMS THAT HAPPENS WHEN THE AIR CONDITIONING CYCLES, AND THIS WAS SEVERAL ORDERS OF MAGNITUDE BEYOND THAT. THIS IS THE 5TH TOYOTA PICKUP I HAVE OWNED IN THE PAST 12 YEARS, AND THE ONLY ONE TO HAVE THIS KIND OF THIS ISSUE. THERE IS SOMETHING WRONG WITH THE DESIGN OF THESE TRUCKS AND IT CAUSES AN EXTREMELY DANGEROUS SITUATION WHENIT OCCURS. I WAS WELL AWARE OF THE COMPLAINTS YOU HAVE RECEIVED FROM OTHERS FOR THIS VERY SAME PROBLEM, LONG BEFORE EXPERIENCING IT MYSELF. *TR
Additional Summary:

Toyota ID No:
NHTSA ODI No: 10292656
Date of Incident: 20090903
Vehicle: 2007 TOYOTA PRIUS
Location of Incident: LONG BEACH, CA
NHTSA Summary:
TL*THE CONTACT OWNS A 2007 TOYOTA PRIUS. HE STATED THAT WHEN HE APPROACHED A STOP LIGHT AND ENGAGED THE BRAKE PEDAL, THE VEHICLE ACCELERATED WITHOUT WARNING THE CONTACT LOST CONTROL OF THE VEHICLE AND CRASHED INTO A TREE. THE AIR BAGS DEPLOYED; HOWEVER, THE VEHICLE WAS TOWED TO AN AUTHORIZED DEALER TO BE REPAIRED. THE DEALER CONFIRMED THAT THE FAILURE COULD HAVE BEEN DUE TO THE FLOOR MATS. THE VEHICLE IS BEING REPAIRED AND THE INSURANCE COMPANY WILL BE RESPONSIBLE FOR THE REPAIR COST. THE CONTACT IS VERY CONCERNED OF THE SAFETY RISK AND THE POSSIBILITY THAT THE FAILURE COULD REOCCUR. THERE WERE NO INJURIES. THE FAILURE AND CURRENT MILEAGES WERE 15000.
Additional Summary:

Toyota ID No:
NHTSA ODI No: 10293776
Date of Incident: 20090915
Vehicle: 2009 TOYOTA CAMRY
Location of Incident: SAN JOSE, CA
NHTSA Summary:
THE CAR ACCELERATED SUDDENLY WHILE MY DAUGHTER WAS PARKING IT. IT JUMPED TWO CURBS AND SIDESWIPED A TREE BEFORE SHE WAS ABLE TO STOP IT. THE DEALER

TOLD US SHE MUST HAVE STEPPED ON THE ACCELERATOR INSTEAD OF THE BRAKE, BUT SHE INSISTS THAT SHE DIDNT. *TR
Additional Summary:

Toyota ID No:
NHTSA ODI No: 10296101
Date of Incident: 20090919
Vehicle: 2009 TOYOTA CAMRY
Location of Incident: PALM HARBOR, FL
NHTSA Summary:
TL*THE CONTACT OWNS A 2009 TOYOTA CAMRY. WHILE PARKING THE VEHICLE AND SHIFTING THE GEAR IN PARK, THE VEHICLE ACCELERATED AND CRASHED INTO A WALL. THE AIR BAGS DID NOT DEPLOY. THERE WERE NO INJURIES. THE MANUFACTURER HAS NOT OFFERED ANY ASSISTANCE. THE CONTACT STATED THAT THE CARPET IN THE VEHICLE WAS NOT RELATED TO THE FAILURE. THE CURRENT AND FAILURE MILEAGES WERE 4,000.
Additional Summary:

Toyota ID No:
NHTSA ODI No: 10292577
Date of Incident: 20090832
Vehicle: 2006 LEXUS IS250
Location of Incident: NEWBURY PARK, CA
NHTSA Summary:
TL*THE CONTACT OWNS A 2006 LEXUS IS250. WHILE THE CONTACT WAS APPROACHING A STOP SIGN WITH HIS FOOT ON THE BRAKE PEDAL, THE VEHICLE SUDDENLY ACCELERATED FORWARD WHICH CAUSED THE CONTACT TO REAR ENDED THE VEHICLE IN FRONT OF HIM. THE VEHICLE WAS TAKEN TO THE DEALER WHO INFORMED HIM TO REMOVE THE MATS FROM THE VEHICLE. THERE WERE NO PRIOR WARNINGS. THE CURRENT AND FAILURE MILEAGES WERE 70000.
Additional Summary:

Toyota ID No:
NHTSA ODI No: 10295976
Date of Incident: 20090920
Vehicle: 2010 TOYOTA TUNDRA
Location of Incident: TEXAS CITY, TX
NHTSA Summary:
THE CONTACT OWNS A 2010 TOYOTA TACOMA. THE CONTACT STATED AS HE WAS DRIVING AND COMING TO A STOP AT THE STOP SIGN HIS VEHICLE ENGINE STARTED TO RACE AS IT WAS GETTING READY TO ACCELERATE. CONTACT DEPRESSED THE BRAKES BEFORE IT ACCELERATE. HE HAS NOT TAKEN HIS VEHICLE TO THE DEALER AS YET OR THE CALL THE MANUFACTURE TO INFORM THEM OF THIS ISSUE. THE FAILURE MILEAGE WAS 600...AJW
Additional Summary:

Toyota ID No:
NHTSA ODI No: 10289153
Date of Incident: 20091005
Vehicle: 2007 LEXUS ES350
Location of Incident: HILLSBORO BEACH, FL

NHTSA Summary:
YL* THE CONTACT OWNS A 2007 ES350 LEXUS. WHILE DRIVING 60 MPH ALL OF A SUDDEN THE VEHICLE ACCELERATED WITHOUT TOUCHING THE ACCELERATOR PEDAL. HE APPLIED THE BRAKES. HOWEVER, THE VEHICLE WOULD NOT STOP. HE WAS FORCED TO SHIFT GEARS INTO NEUTRAL TO STOP THE VEHICLE. ALTHOUGH, THE VEHICLE STOPPED THE ENGINE WAS STILL REVVING. THE CONTACT HAD TO ENGAGE THE ACCELERATOR PEDAL. A COUPLE OF TIMES SINCE IT WAS STUCK IN PLACE. THE DEALER COULD NOT DUPLICATE THE FAILURE. WITHIN THE LAST THREE TO FOUR WEEKS THE FAILURE HAS HAPPENS 5 TO 6 TIMES AND HAS BECOME PROGRESSIVELY WORSE. THE DEALER WILL MAKE ANOTHER ATTEMPT TO DIAGNOSE THE FAILURE AND THE MANUFACTURER WAS NOTIFIED OF THE ACCELERATION PROBLEM. THE FAILURE AND CURRENT MILEAGE WAS 6000.
Additional Summary:

Toyota ID No: 10288670
NHTSA ODI No: 10281816
Date of Incident: 20091016
Vehicle: 2009 TOYOTA TACOMA
Location of Incident: HUNTINGDON VALLEY, PA
NHTSA Summary:
I WAS ON MY WAY TO WORK IN MY NEW (3 MONTHS OLD) 2009 TOYOTA TACOMA. I WAS ABOUT ONE BLOCK FROM HOME WHEN I WAS APPROACHING A RED LIGHT. AS I WAS BRAKING FOR THE RED LIGHT AND THE ENGINE SUDDENLY SPED UP ON ITS OWN. I HAD TO PRESS DOWN VERY HARD ON THE BRAKES TO STOP THE CAR. BUT WHEELS WERE STILL SPINNING CAUSE THE BRAKES TO SMOKE. (I COULD SEE THE SMOKE IN MY REAR VIEW MIRROR. I HAD TO PUT THE CAR IN PARK TO COMPLETELY STOP THE FORWARD MOVEMENT OF THE CAR. THE ENGINE CONTINUED TO RUN AT VERY HIGH RPM. I THEN SHUT THE VEHICLE OFF, I STARTED THE CAR AGAIN IN PARK, THE ENGINE AGAIN RACED UP MUCH HIGHER THAN NORMAL. I SHUT THE CAR OFF AGAIN AND RESTARTED AND EVERY THING WAS NORMAL. I HAD THE CAR TOWED TO THE TOYOTA DEALER AS I FELT IT WAS UNSAFE TO DRIVE. PRIOR IT BEING TOWED I CHECKED THE GAS PEDAL AND THERE WERE NO OBSTRUCTIONS AROUND IT. THE DEALER COULD NOT FIND ANY FAULT CODES OR STUCKING LINKAGE ETC. THEY ALSO TOOK IT FOR A TEST DRIVE. THE SERVICE MANAGER SUGGESTED I ACCIDENTALLY PUT MY FOOT ON THE GAS INSTEAD OF THE BRAKE, WHICH I TRULY BELIEVE IS NOT THE CASE HERE. I SAW OTHER REPORTS ON THE INTERNET SIMILAR TO THIS FOR THE TACOMA SO I FELT COMPELLED TO NOTIFY YOU. KINDLY REQUEST THAT YOU LOOK INTO THIS MATTER AS SOMEONE COULD EVENTUALLY GET SERIOUSLY HURT OR KILLED. NOTE: I WAS NOT USING CRUISE CONTROL AT THE TIME OF THE INCIDENT. *TR
Additional Summary:

Toyota ID No:
NHTSA ODI No:
Date of Incident: 20091019
Vehicle: 2006 TOYOTA AVALON
Location of Incident: PHILADELPHIA, PA
NHTSA Summary:
On October 19, 2009, Eva Gomez was parking in her designated parking spot at her condominium located at 136 Benjamin Court, Philadelphia, PA 19114, at approximately 3:00 pm. While her foot was still on the brake, the car unintentionally accelerated, hitting a gas pipe in the condominium and setting fire to the building as well as her car.
Additional Summary:

Toyota ID No: 10291802
NHTSA ODI No: 10291802
Date of Incident: 20091022
Vehicle: 2009 TOYOTA CAMRY
Location of Incident: RICHBORO, PA
NHTSA Summary:
OUR 2009 TOYOTA CAMRY WHEREIN HAS EXPERIENCED THREE SEPARATE INCIDENTS OF SUDDEN UNINTENDED ACCELERATION DURING THE PAST NINE MONTHS. THE CAR WAS PURCHASED IN APRIL OF 2008. THE FIRST EVENT OCCURRED IN FEBRUARY 2009. THE SECOND AND THIRD EVENTS OCCURRED IN JULY 2009 AND OCTOBER 2009, RESPECTIVELY. IN ALL THREE EVENTS THE ACCELERATOR ¬ GRABBED¬ AND BEGAN TO SPEED UNCONTROLLARLY. DURING THE FIRST EVENT, THE CAR CONTINUED TO ACCELERATE EVEN AFTER I REMOVED MY FOOT FROM THE ACCELERATOR. DURING THE SUBSEQUENT TWO EVENTS, THE CAR ACCELERATED WITHOUT MY FOOT EVEN BEING ON THE GAS PEDAL. IN ALL INSTANCES, IT FELT AS IF THE RESUME BUTTON OF THE CRUISE CONTROL (WHICH WAS OFF AT ALL TIMES) WAS DEPRESSED. SPEEDS REACHED IN EXCESS OF 60MPH IN EACH EVENT. DURING THE FIRST TWO EVENTS, A COMBINATION OF EXTREME-PRESSURE BRAKING AND SHIFTING THE CAR INTO NEUTRAL WORKED TO STOP THE CAR. THANKFULLY, WITHOUT INCIDENT. DURING THE THIRD EVENT, AFTER ROUGHLY FIVE TO TEN SECONDS OF ACCELERATION, A "POP" WAS HEARD AT WHICH TIME THE CAR'S ACCELERATION CEASED AND RETURNED TO NORMAL. THE CAR WAS TAKEN TO THE DEALER AFTER EACH INCIDENT. ALL THREE TIMES DIAGNOSTICS WERE PERFORMED AND ALL THREE TIMES THE SAME ANSWER.....'FOUND NO CURRENT OR PENDING FAULT CODES'. THE FIRST TIME IT WAS BLAMED ON AN AFTER-MARKET FLOOR MAT. WHILE ONE WAS INSTALLED, IT WAS THE TYPE WITH 'GRABBER' SPIKES ON THE UNDERSIDE TO PREVENT MOVEMENT, SIMILAR TO A CHAIR MAT. I KNEW THAT THIS WAS NOT THE CAUSE BUT, AS A PRECAUTION, I REMOVED THE AFTER-MARKET FLOOR MAT. FOR THE SECOND EVENT, AGAIN, THE DEALER FOUND NO FAULTS AND, AGAIN, SUGGESTED FLOOR MATS. THE ONLY FLOOR MAT IN THE VEHICLE WAS THE FACTORY-INSTALLED CARPETED FLOOR MAT WHICH WAS SECURED BY THE FACTORY-INSTALLED RETAINING HOOKS. FLOOR MATS WERE NOT THE ISSUE. AS AN EXTRA PRECAUTION, HOWEVER, I REMOVED THE CARPETED MAT. THE THIRD EVENT OCCURRED ON OCTOBER 22, 2009. CAR WAS TAKEN TO DEALER. FACTORY TECHNICIAN WAS BROUGHT IN. NO PROBLEM FOUND. *TR
Additional Summary:

Toyota ID No:
NHTSA ODI No: 10285797
Date of Incident: 20091028
Vehicle: 2006 TOYOTA AVALON
Location of Incident: JACKSON, NJ
NHTSA Summary:
WHILE PULLING INTO A MARKED PARKING SPACE VEHICLE SUDDENLY ACCELERATED. IT JUMPED TWO WHEEL STOPPERS, WENT UP A SMALL HILL AND WITHIN A COUPLE OF FEET OF RUNNING INTO A CEMENT BUILDING BEFORE I COULD STOP IT. VERY VERY SCARY SITUATION. I CALLED GERMAIN TOYOTA IN NAPLES, FLORIDA AND HAD THE VEHICLE TAKEN THERE. AT THIS POINT IN TIME, I DON'T KNOW HOW THEY ARE GOING TO CORRECT THE PROBLEM. *TR
Additional Summary:

Toyota ID No:
NHTSA ODI No: 10292566

Date of Incident: 20091026
Vehicle: 2007 TOYOTA CAMRY
Location of Incident: PHENIX CITY, AL
NHTSA Summary:
CAR ACCELERATOR TOOK OFF WHILE PARKED AT DRIVE IN BANK. *TR
Additional Summary:

Toyota ID No:
NHTSA ODI No: 10293680
Date of Incident: 20091028
Vehicle: 2007 TOYOTA CAMRY
Location of Incident: BEACHWOOD, OH
NHTSA Summary:
YL* THE CONTACT OWNS A 2007 TOYOTA CAMRY. WHILE SHIFTING THE VEHICLE INTO REVERSE, THE VEHICLE SUDDENLY ACCELERATED BACKWARDS. HE ATTEMPTED TO SHIFT THE VEHICLE INTO NEUTRAL, BUT THE ENGINE CONTINUED TO REEVE. EVENTUALLY HE TURNED THE ENGINE OFF AND THE VEHICLE STOPPED. ALSO WHILE AT A STOP LIGHT THE VEHICLE ACCELERATED WITHOUT INTENTION. HE CONTACTED THE MANUFACTURER AND WAS NOT PROVIDED WITH ANY ASSISTANCE. THE VEHICLE WAS TAKEN TO THE DEALER SEVERAL TIMES. THE FIRST TECHNICIAN COULD NOT IDENTIFY THE CAUSE OF THE FAILURE. AT THE SECOND INSPECTION THE TECHNICIAN STATED THE FLOOR-MATS DID NOT CAUSE THE FAILURE. HOWEVER, HE CONCLUDED THAT THE COMPUTER NEEDED TO BE REPROGRAMMED. NO REPAIRS WERE MADE. THE FAILURE AND CURRENT MILEAGES WERE 10,000.
Additional Summary:

Toyota ID No:
NHTSA ODI No: 10290982
Date of Incident: 20091028
Vehicle: 2007 LEXUS ES350
Location of Incident: WESTLAKE VILLAGE, CA
NHTSA Summary:
FAULTY ACCELERATOR. ON 2007 ES 350, VEHICLE SPED UP WITH FOOT OFF THE ACCELERATOR. ONLY ONE OCCURRENCE. WAS ABLE TO USE BREAK TO SLOW DOWN VEHICLE. ACCELERATOR FINALLY STOPPED. IMMEDIATELY CHECKED FLOOR MATS WHICH WERE SECURED AND HOOKED. *TR
Additional Summary:

Toyota ID No:
NHTSA ODI No: 10291091
Date of Incident: 20091011
Vehicle: 2008 LEXUS ES250
Location of Incident: FREEHOLD, NJ
NHTSA Summary:
I WAS DRIVING MY WIFE'S LEXUS 2008 ES 250 OUT OF A PARKING LOT WHEN APPLYING MY FOOT ON THE BRAKE THE CAR ACCELERATED. I NOW SLAMMED MY FOOT ON THE BRAKES AND THE CAR CONTINUED TO ACCELERATE. THE ONLY THING THAT STOPPED MY CAR WAS THE CAR IN FRONT OF IT WITH VERY LITTLE DAMAGE, IF THE CAR WAS NOT IN FRONT OF ME I WAS ACCELERATING FASTER INTO ON COMING TRAFFIC. MY FLOOR MAT IS NOT ON THE FLOOR AS AFTER THE SAN DIEGO INCIDENT THAT WAS TOYOTA'S REASONING. WE WERE TOLD ROUGHLY A MONTH AND HALF AGO TO TAKE THE MAT OUT, WHICH I DID RIGHT AWAY. THEY CAN DENY IT ALL THEY WANT THIS CAR

WAS ACCELERATING AND GETTING FASTER WHEN APPLYING THE BRAKE. THE POLICEMAN AT THE SCENE INSTRUCTED US TO NOT DRIVE THIS VEHICLE AND TO GET A LOADER WHICH WE DID. THE CAR WAS PICKED UP AND SENT TO LEXUS IN FREEHOLD. FIRST WE WERE TOLD SOMETHING IS WRONG AND THEY TEST DROVE IT AND SUCH. THEY WERE KEEPING IT FOR 3 DAYS NOW THEY ARE TELLING US THEY ARE KEEPING IT FOR 3 WEEKS. THERE ARE REPORTS ALL OVER THE WEB ON THIS WITH OVER 2000 COMPLAINTS. IT IS OBVIOUS THERE IS A MAJOR DEFECT IN THEIR COMPUTER SYSTEM. THEY REALLY NEED TO STOP COVERING THIS UP AS 14 PEOPLE HAVE DIED. IVE THIS HAPPENED TO PEOPLE IN LEXUS LOANERS AND LOANERS DO NOT HAVE FLOOR MATS. AGAIN, LUCKILY THE CAR WAS ONLY 15 FEET IN FRONT OF ME WHAT IF IT WAS 100 FT? *TR
Additional Summary:

Toyota ID No: 10290915
NHTSA ODI No: 10290915
Date of Incident: 20091101
Vehicle: 2008 TOYOTA SEQUOIA
Location of Incident: WESTFORD, MA
NHTSA Summary:
MY 2008 TOYOTA SEQUOIA STARTED TO ACCELERATE FROM A STOP WITH MY FOOT STILL ON THE BRAKES WITHOUT PRESSING ON THE GAS. IT TOOK BOTH FEET STANDING ON THE BRAKE TO TRY AND STOP MY VEHICLE. IT PUSHED MY VEHICLE INTO THE CAR IN FRONT OF ME, MY TIRES WITH SCREECHING AND MY VEHICLE WAS PUSHING THE CAR IN FRONT OF ME. IT FINALLY STOPPED AFTER A FEW SECONDS AS I WAS GOING TO TRY AND PUT THE CAR IN PARK OR NEUTRAL. MY FLOOR MAT WAS IN CORRECT POSITION- NOT JAMMED AND MY FOOT WAS NOT ON THE ACCELERATOR. I WAS HAPPY TO HAVE WITNESS WITH ME AS NO ONE WOULD HAVE BELIEVED ME. *TR
Additional Summary:

Toyota ID No:
NHTSA ODI No: 10291518
Date of Incident: 20091101
Vehicle: 2005 TOYOTA TACOMA
Location of Incident: LENEXA, KS
NHTSA Summary:
MY 2005 TOYOTA TACOMA ACCELERATOR WENT FULL OPEN THROTTLE AND THE TRUCK RAN AWAY FULL OPEN THROTTLE WITH OUT ME PRESSING ON THE GAS PEDAL. I COULD NOT STOP THIS WITH CONDITION WITH THE BRAKE PEDAL BURNING MY BRAKES TO A SMELL OF BURNT BRAKE PAD. THIS HAPPEN IN THE DAY TIME AND THE FLOOR MAT WAS NO WHERE CLOSE OR NEAR THE ACCELERATOR PEDAL. I LOOKED DOWN TO CHECK THE FLOOR MAT POSITION. TO STOP THE RUN AWAY VEH AND OVER REVVING ENGINE CONDITION I HAD TO TURN THE IGN KEY TO THE OFF POSITION, AND I PUT THE TRANS IN NEUTRAL AND COASTED TO A STOP TO VOID ENGINE DAMAGE AND CRASHING. THIS CONDITION HAPPENED WHILE ACCELERATING ONTO A HWY WHERE THE POSTED SPEED LIMIT IS 65MPH. AFTER RESTARTING THE ENGINE IS WAS BACK TO NORMAL AND THIS CONDITION HAS NOT HAPPENED AGAIN IN THE LAST 150 MILES THAT I HAVE DRIVEN THE TRUCK. THE TOYOTA DEALERSHIP SAID THEY DONT HAVE A REPAIR AND DONT NO WANT CAUSED MY TRUCK TO GO WIDE OPEN THROTTLE BY ITSELF. *TR
Additional Summary:

Toyota ID No:
NHTSA ODI No: 10291337
Date of Incident: 20091106

Vehicle: 2009 TOYOTA TACOMA
Location of Incident: SUDBURY, MA
NHTSA Summary:
ON TUESDAY, NOVEMBER 3, 2009, I WAS COMING OUT OF A STOP LIGHT AND THE THROTTLE WENT TO FULL OPEN AND STUCK. (2000 TACOMA - JUST A YEAR OLD) I AM A CONSERVATIVE DRIVER AND DO NOT GUN THE ENGINE. I WAS PULLING INTO THE INTERSECTION GRADUALLY AND HADN'T EVEN LET THE CLUTCH OUT ALL THE WAY YET TO SHIFT OUT OF FIRST WHEN THE THROTTLE WHEN TO FULL. (THANK GOODNESS I HAVE A STANDARD) I RAISED THE CLUTCH TO GIVE ME JUST ENOUGH GAS TO MOVE THROUGH THE INTERSECTION AND STOP ON THE OTHER SIDE. I TURNED OFF THE TRUCK AND WHEN I TURNED IT BACK ON, IT WAS FINE. THE ENGINE SMELLED AWFUL! I CHECKED THE FLOOR MAT WHEN I STOPPED BECAUSE I KNOW IT CAN CAUSE PROBLEMS AND I HAD A NON-CONFORMING MAT, SO I KEEP AN EYE ON IT, BUT THE MAT WASN'T THE PROBLEM. ALSO, I NEVER HAD THE ACCELERATOR DOWN VERY FAR AT ALL WHEN THE THROTTLE OPENED UP, SO I DON'T SEE HOW THE MAT COULD CAUSE THE THROTTLE TO OPEN FULL, STICK YES, BUT OPEN FULL BY ITSELF? I DROVE TO THE REST OF THE WAY TO WORK (LESS THAN 2 MILES) AND THE SMELL BLEW AWAY AND ALL SEEMED OK. I HAD IT IN THE SHOP TODAY AND THEY COULD FIND NOTHING WRONG AND TOLD ME TO REMOVE THE MATS. FINE, I CAN DO THAT, BUT MEANWHILE IT MAKES ME NERVOUS THAT IT COULD HAPPEN AGAIN. THE SERVICE DEPARTMENT REPRESENTATIVE AGREED WITH ME THAT HE DIDN'T SEE HOW THE MATS COULD HAVE CAUSED THE PROBLEM. I DID NOT KNOW ABOUT THIS BEING A GENERAL PROBLEM AND IN THE NEWS RIGHT NOW (I DON'T WATCH TV AND IT'S MISS THE NPR STORY OR IT ISN'T FRONT PAGE, I MAY NOT HEAR THINGS). WHEN I LEARNED OUT OTHERS WERE HAVING THE PROBLEM, I THOUGHT I SHOULD WRITE ABOUT MINE. *TR
Additional Summary:

Toyota ID No:
NHTSA ODI No: 10295737
Date of Incident: 20091101
Vehicle: 2009 TOYOTA VENZA
Location of Incident: GLENNDALE, TX
NHTSA Summary:
TL*THE CONTACT OWNS A 2009 TOYOTA VENZA. HE STATED THAT WHILE HE WAS DRIVING IN REVERSE WITH HIS FOOT ON THE BRAKE PEDAL, THE VEHICLE UNEXPECTEDLY ACCELERATED AND HIT A TREE. THE ENGINE WAS STILL ON; HOWEVER, HE TURNED THE VEHICLE OFF AND PUSHED IT INTO THE GARAGE FOR FEAR THAT THE FAILURE WOULD RECCUR. THE CONTACT SUSTAINED A LARGE LACERATION TO HIS HEAD. HE WAS REQUIRED TO GET STAPLES FOR HIS HEAD INJURY. THE AIRBAGS DID NOT DEPLOY. THE DEALER DID NOT OFFER ANY ASSISTANCE. YET, THEY ADVISED THE CONTACT TO NOTIFY THE MANUFACTURER. THE MANUFACTURER STATED THAT THEY WOULD ADVISE HIM OF THE DIAGNOSIS AFTER THEY RETRIEVE THE VEHICLE AND INSPECT IT. THE FAILURE AND CURRENT MILEAGE WERE 250.
Additional Summary:

Toyota ID No:
NHTSA ODI No: 10291942
Date of Incident: 20091104
Vehicle: 2006 TOYOTA AVALON
Location of Incident: TITUSVILLE, FL
NHTSA Summary:
I CONCUR WITH THE TOYOTA OWNERS WHO ARE SAYING THAT THE PROBLEM IS SOME ELECTRONIC GLITCH. I HAVE ALSO EXPERIENCED THIS. I ONLY HAVE THE CARPET MATS.

NOT THE ALL WEATHER ONES, AND JUST HAD THEM CHECKED AT THE DEALER AND THEY ARE PROPERLY FASTENED. MY CAR MOST OFTEN EXPERIENCES A PROBLEM (ON OCCASION) WHEN YOU "YIELD" AT AN INTERSECTION AND DON'T STOP.-THE CAR BUCKS OR THEN BOLTS. IT SEEMS MORE LOOKING INTO. THESE HIGH SPEED ACCELERATIONS BEING REPORTED ARE SCARY!*TR
Additional Summary:

Toyota ID No:
NHTSA ODI No: 10294507
Date of Incident: 20091112
Vehicle: 2005 TOYOTA AVALON
Location of Incident: SPRING, TX
NHTSA Summary:
TL*THE CONTACT OWNS A 2005 TOYOTA AVALON. CONTACT STATED WHILE PARKING THE VEHICLE GOING UP A RAMP THE VEHICLE ACCELERATED AND CRASHED INTO WALL. THE CONTACT THOUGHT AT THE TIME HER FOOT SLIPPED ON THE BRAKE PEDAL. THE CONTACT WAS NOT HURT AND THE VEHICLE WAS REPAIRED. ONE YEAR AFTER THE FIRST INCIDENT, WHILE PULLING INTO THE DRIVEWAY THE VEHICLE SURGED AGAIN. THIS TIME THE CONTACT WAS ABLE TO BREAK AND STOP THE VEHICLE FROM ALWAYS CRASHING INTO THE GARAGE. CONTACT FEELS THIS VEHICLE IS UNSAFE AND REFUSES TO DRIVE THE VEHICLE. CURRENT MILEAGE WAS 47,000 AND FAILURE MILEAGE WAS 27,000.
Additional Summary:

Toyota ID No:
NHTSA ODI No: 10292198
Date of Incident: 20091115
Vehicle: 2006 TOYOTA AVALON
Location of Incident: CHATSWORTH, CA
NHTSA Summary:
WHILE TOYOTA HAS ISSUED A LETTER REGARDING NHTSA CAMPAIGN 09V280000, I BELIEVE THAT THE PROBLEM WITH CONTINUOUS ACCELERATION IS CAUSED NOT BY THE CARPET (WHICH IS A LUDICROUS STORY) BUT BY THE FAULTY CONTROL MECHANISM (PERHAPS, COMPUTER CHIPS) USED IN THE CRUISE CONTROL. MY 2006 AVALON HAS A LASER-GUIDED CRUISE CONTROL WHICH AUTOMATICALLY SLOWS DOWN MY VEHICLE WHEN IT APPROACHES TOO CLOSE TO THE VEHICLE AHEAD OF IT, AFTER A SAFE DISTANCE IS ATTAINED, IT WHEN ACCELERATES TO KEEP UP WITH THE VEHICLE AHEAD. I HAVE NOTICED THAT SOMETIMES IN SO DOING, THE VEHICLE SURGES AS IF I WERE FLOORING THE GAS PEDAL. IT IS SCARY WHEN IT LUNGES FORWARD WITH SUCH A FORCE. I AM NO LONGER USING THE CRUISE CONTROL FOR THIS REASON. I BELIEVE THAT THE PROBLEM IS IN CERTAIN CRUISE CONTROL DEFECT. CARPET HAS NOTHING TO DO WITH IT. THAT SOUNDS LIKE A SMOKE SCREEN. PLEASE INVESTIGATE VIGOROUSLY. *TR
Additional Summary:

Toyota ID No:
NHTSA ODI No: 10295530
Date of Incident: 20091116
Vehicle: 2009 TOYOTA CAMRY
Location of Incident: NORTH KINGSTOWN, RI
NHTSA Summary:

ENTERING MY DRIVEWAY AT SLOW SPEED - APPROXIMATELY 5MPH TO DRIVE UP A SMALL INCLINE. ENGINE BEGAN TO RACE AND VEHICLE ACCELERATED AND CRASHED INTO GARAGE. GARAGE DOOR DESTROYED AND CONTENTS OF GARAGE DESTROYED CONTENTS OF GARAGE ACTUALLY STOPPED THE VEHICLE WHICH IS A 2009 CAMRY. VEHICLE MAY HAD BEEN REMOVED DUE TO TOYOTA'S RECENT LETTER OF RECALL, THEREFORE THAT WAS NOT THE CAUSE OF EXTREMELY RAPID ACCELERATION. *TR
Additional Summary:

Toyota ID No:
NHTSA ODI No: 10294131
Date of Incident: 20091116
Vehicle: 2009 TOYOTA MATRIX
Location of Incident: BOCA RATON, FL
NHTSA Summary:
TOYOTA ACCIDENT I DRIVE A LEASED 2009 TOYOTA MATRIX AT 8:24 AM ON NOVEMBER 16, 2009, PULLING INTO A PARKING SPACE AT THE DOCTORS OFFICE BUILDING AT 1965 CLINT MOORE RD BOCA RATON. THE CAR WAS ALMOST STOPPED AND MY FOOT WAS ON THE BRAKE, WHEN THE CAR REVVED UP TO THE MAXIMUM, JUMPED THE CURB AND HIT A PALM TREE. I IMMEDIATELY SWITCHED OFF THE ENGINE. I WAS DAZED, AND AFTER A COUPLE OF MINUTES I GOT OUT THE CAR TO SEE THE DAMAGE. HAVING HEARD OF CAR MAT PROBLEMS, I INSPECTED THE MATS, BUT NOTHING WAS OUT OF PLACE. AFTER A FEW MINUTES, I WENT TO MY DOCTOR'S APPOINTMENT , BUT HAD TO LEAVE BEFORE I SAW THE DOCTOR, AS I DIDN'T FEEL WELL. DESPITE A LOT OF FRONT END DAMAGE, THE CAR WAS DRIVABLE, SO I DECIDED TO DRIVE THE CAR TO MY HOME, BUT I WAS FRIGHTENED ALL THE WAY, AS I THOUGHT THE CAR MIGHT DO THE SAME THING AGAIN IN TRAFFIC. WHEN I GOT HOME I CALLED ALLSTATE AND REPORTED THE ACCIDENT. I TOLD THEM THERE IS A PROBLEM WITH THE CAR, AS IT ACCELERATED BY ITSELF, AND THE DRIVER SIDE AIRBAG DID NOT INFLATE. PER INSTRUCTIONS FROM ALLSTATE, THE CAR HAS BEEN TOWED TO ED MORSE CADILLAC FOR REPAIR OF THE DAMAGE INCURRED. MY QUESTION IS, CAN I ILLEGALLY BREAK MY LEASE AND RETURN THE CAR TO TOYOTA, AS IT IS UNSAFE.
Additional Summary:

Toyota ID No:
NHTSA ODI No: 10293096
Date of Incident: 20091119
Vehicle: 2009 TOYOTA CAMRY
Location of Incident: DADE CITY, FL
NHTSA Summary:
TL* THE CONTACT OWNS A 2009 TOYOTA CAMRY. DURING BRAKE APPLICATION AT 10 MPH, THE VEHICLE ACCELERATED WITHOUT INTENTION. CONSEQUENTLY SHE REAR-ENDED ANOTHER VEHICLE. THE DRIVER SUSTAINED MODERATE INJURIES. THE POLICE AND AMBULANCE WERE CALLED TO THE SCENE. THE VEHICLE WAS TOWED TO AN AUTHORIZED DEALER FOR INSPECTION. THE CAUSE OF FAILURE HAS NOT BEEN DETERMINED AT THIS TIME. THE FAILURE AND CURRENT MILEAGE MILEAGES WERE 31,000.
Additional Summary:

Toyota ID No:
NHTSA ODI No: 10298511
Date of Incident: 20091124
Vehicle: 2010 TOYOTA CAMRY

Location of Incident: SPRINGFIELD, PA
NHTSA Summary:
11/24/09 I WAS DRIVING MY 2010 CAMRY IN A PARKING LOT. MY CHILDREN WERE IN THE BACK SEAT. I WAS TRAVELING 10 MPH. MY RIGHT FOOT WAS NOT ON THE GAS, NOR THE BRAKE, THE TORQUE OF THE ENGINE WAS SUFFICIENT FOR MOVING US ALONG WHILE LOOKING FOR A PARKING SPACE. MY RIGHT FOOT WAS ABOVE THE BRAKE AS I WAS SLOWLY LOOKING FOR A PARKING SPOT. SUDDENLY, I HEARD A VERY LOUD VVRRRROOMMMM AND THE CAR SPONTANEOUSLY ACCELERATED AND LUNGED FORWARD APPROXIMATELY 50 FEET. THANKFULLY, I WAS ABLE TO BRAKE QUICKLY AND STOPPED THE CAR. I THEN TOOK IT TO THE DEALERSHIP, CONCELLI'S RAN A DIAGNOSTIC ON MY CAR. LATER THAT DAY WHEN I PICKED UP THE CAR, THEY SAID THEY FOUND NOTHING. WHEN I ASKED THEM WHERE THE "SPONTANEOUS ACCELERATION" (A PROBLEM TOYOTA EARLIER IN THE DAY TOLD ME THEY WERE HAVING) WOULD HAVE APPEARED ON THE DIAGNOSTIC, THEY WERE AT A LOSS. LET ME BE VERY CLEAR THAT THERE WAS NOT A FLOOR MAT IN THE DRIVER'S SIDE. I DO NOT BELIEVE THE "SPONTANEOUS ACCELERATION" WAS CAUSED BY THE "MAT ISSUE". I KNOW MY EXPERIENCE WAS REAL AND NOT CAUSED BY DRIVER ERROR. I FEEL THE PROBLEM IS ELSEWHERE AND EXACERBATED FOR SOME DRIVERS BECAUSE THEY HAD THE FLOOR MATS IN PLACE. PLEASE PRESS TOYOTA TO GET TO THE BOTTOM OF THIS ISSUE. I NO LONGER FEEL SAFE IN MY 2010 TOYOTA CAMRY THAT I BOUGHT FOR SAFETY REASONS IN THE FIRST PLACE. *TR. THANK YOU.
Additional Summary:

Toyota ID No: 10293053
Date of Incident: 20091123
Vehicle: 2008 TOYOTA TACOMA
Location of Incident: LOVELAND, CO
NHTSA Summary:
WHILE DRIVING N FROM DENVER ON I-25 ON 11-23-2009, SPEED LIMIT OF 75MPH, I HAD THE CRUISE CONTROL OPERATING SET AT A SPEED OF 73-75 MPH. THERE WAS NO FEET ON EITHER GAS OR BRAKE PEDAL. NOT UNTIL I FOUND THE TACOMA TRUCK CRUISING AT A SPEED ABOVE 90MPH DID I REALIZE SOMETHING WAS WRONG WITH THE TRUCK. I USED THE BRAKE PEDAL AND DISENGAGED THE CRUISE CONTROL AND THE VEHICLE CAME UNDER MY CONTROL. AFTER RE-SETTING THE CRUISE CONTROL TO 75 +/- MPH, TO TEST THE ISSUE, IT OCCURRED AGAIN. I CHOSE TO COMPLETE THE TRIP W/O CRUISE CONTROL W/ DILIGENT OVERSITE. *TR.
Additional Summary:

Toyota ID No: 10293920
Date of Incident: 20091126
Vehicle: 2007 TOYOTA AVALON
Location of Incident: HAMBURG, NY
NHTSA Summary:
WE HAVE A TOYOTA AVALON 2007 & HAVE NOTICED THAT AFTER WE DISENGAGE THE CRUISE CONTROL, THERE IS A SUDDEN ACCELERATION UP TO THE PRESET SPEED. THERE HAS ALSO BEEN NUMEROUS INCIDENTS WHEN THE CAR ACCELERATES PAST THE PRESET SPEED & WE HAVE TO DISENGAGE THE CRUISE CONTROL & THEN RESET IT. *TR
Additional Summary:

Toyota ID No:

NHTSA ODI No: 10295241
Date of Incident: 20091127
Vehicle: 2007 TOYOTA TACOMA
Location of Incident: BARCOM, IL
NHTSA Summary:
ON NOVEMBER 27, 2009, MY BOYFRIEND AND I WERE DRIVING MY 2007 TOYOTA TACOMA HOME AFTER ATTENDING A FOOTBALL GAME AT AUBURN UNIVERSITY. MY BOYFRIEND WAS DRIVING AND AS HE WAS ACCELERATING TO PASS A SEMI, MY TACOMA'S ACCELERATOR STUCK TO THE FLOOR, PUSHING MY VEHICLE TO DANGEROUS SPEEDS NEARLY CAUSING US TO REAR-END THE VEHICLE IN FRONT OF US. HE WAS UNABLE TO GET THE VEHICLE TO STOP USING THE BRAKE AND WAS UNABLE TO PRY THE ACCELERATOR UP WITH THE TOE OF HIS SHOE. HE REBORTED TO PUTTING THE VEHICLE IN NEUTRAL AND TURNING IT OFF. WE WERE TERRIFIED, IN HEAVY TRAFFIC AND IN A VEHICLE WE NO LONGER FELT SAFE DRIVING. APPROXIMATELY AN HOUR AFTER THE FIRST INCIDENT, THE TRUCK SUDDENLY ACCELERATED AGAIN. AS WE WERE SPEEDING UP AFTER BEING STOPPED AT A RED LIGHT, THE VEHICLE SURGED PULLING THE ACCELERATOR AWAY FROM MY BOYFRIEND'S FOOT TO THE FLOOR. HE REBORTED, AGAIN, TO PUTTING THE VEHICLE IN NEUTRAL IN ORDER TO STOP IT. WE TOOK THE TACOMA TO TOYOTA OF DOTHAN THE NEXT MORNING TO DETERMINE WHAT THE PROBLEM WAS. THE DEALERSHIP KEPT THE VEHICLE NEARLY A WEEK TO DETERMINE THE PROBLEM. THEY REPORTED THAT THE FLOOR MAT MUST HAVE BEEN CAUGHT UNDER THE GAS PEDAL. I KNOW FOR A FACT THE MAT WAS NOT UNDER THE ACCELERATOR. I HAD READ REPORTS PRIOR TO THE INCIDENT WHERE MISPLACED FLOOR MATS WERE CAUSING THE ACCELERATOR TO HANG AND I HAD PULLED THE MAT IN MY VEHICLE BACK INTO A SECURE LOCATION. I TALKED TO MY BOYFRIEND, HE REPORTED THAT THE MAT WAS IN ITS PROPER PLACE WHEN THE INCIDENT OCCURRED. *TR
Additional Summary:

Toyota ID No:
NHTSA ODI No: 10298480
Date of Incident: 20091129
Vehicle: 2007 TOYOTA PRIUS
Location of Incident: LONG BEACH, CA
NHTSA Summary:
ON 11/29/09 IN THE AFTERNOON, AS I WAS PULLING INTO A PARKING SLOT IN A TRADER JOE'S PARKING LOT, MY 2007 TOYOTA PRIUS SUDDENLY ACCELERATED FORWARD OVER A CURB, ACROSS A CROSSWALK, AND CAME TO REST AGAINST A TREE. SPACE COVERED BY THE CAR FROM ACCELERATION TO THE TREE WAS ABOUT 20-25 FEET. WITNESSES ATTEST THAT I WAS USING MY BRAKE AS THEY SAW THE LIGHTS. I DID NOT HAVE TIME TO ATTEMPT TO SHIFT THE CAR TO "NEUTRAL." THE FLOORMATS WERE NOT INTERFERING WITH THE ACCELERATOR PEDAL (I HAVE PICTURES) AND THE FLOOR MATS WERE HOOKED DOWN. FORTUNATELY NO ONE WAS HURT INCLUDING ME. THERE WAS SLIGHT DAMAGE TO THE FRONT DRIVER'S SIDE BUMPER OF AN EMPTY CAR PARKED FACING ME. THERE WAS SUBSTANTIAL DAMAGE TO THE FRONT OF MY PRIUS. AS I STATED, THERE WERE TWO WITNESSES WHO GAVE ME THEIR CONTACT INFORMATION AND SAID THEY WOULD BE WILLING TO TESTIFY FOR ME IF NECESSARY. THERE WAS A TRADER JOE WORKER WHO CALLED A TOW TRUCK. THE DRIVER OF THE OTHER VEHICLE WITH THE MINIMAL DAMAGE WAS QUITE UPSET AND CALLED THE POLICE WHO CAME AND WROTE A REPORT. MY CAR HAS NEVER SUDDENLY ACCELERATED BEFORE. THIS WAS THE FIRST TIME. THE CAR WAS TOWED TO HOOMAN TOYOTA IN LONG BEACH. IN RESPONSE TO MY COMPLAINTS TO TOYOTA, A REGIONAL TEAM WAS SENT TO EVALUATE THE ACCELERATOR MECHANISM. THE CAR IS CURRENTLY BEING REPAIRED HOWEVER TOYOTA HAS NOT BEEN IN TOUCH WITH ME TO TELL ME THEIR FINDINGS. TOYOTA'S

BEHAVIOR TO MY COMPLAINTS OF SAFETY ISSUES HAS BEEN TO TELL ME THAT THE ONLY PROBLEM THEY HAVE IS FLOORMATS AND THAT MY PROBLEM HAS NEVER BEEN REPORTED BEFORE. THEIR EXPLICATION IS THAT I WAS AT ERROR. MY INSURANCE COMPANY STATE FARM INITIALLY HELD ME RESPONSIBLE FOR NOT CONTROLLING THE VEHICLE. WHEN I REQUESTED THIS DECISION, SHE DID MORE RESEARCH AND CHANGED THEIR RULING TO FIND FAULT WITH TOYOTA AND WILL TRY TO GET REIMBURSED FOR REPAIR COSTS AND MY DEDUCTIBLE. I EXPECT MY CAR TO BE READY NEXT WEEK AND AM DEEPLY CONCERNED THAT THE PROBLEM WILL NOT BE FIXED. *TR
Additional Summary:

Toyota ID No:
NHTSA ODI No: 10294737
Date of Incident: 20091208
Vehicle: 2010 TOYOTA COROLLA
Location of Incident: ROMEOVILLE, IL
NHTSA Summary:
DRIVING A RENTAL 2010 COROLLA IN TUCSON. AS I WAS BRAKING TO A STOP AT AT TRAFFIC LIGHT, THE CAR SUDDENLY SURGED AHEAD. FORTUNATELY I WAS FAR ENOUGH FROM THE VEHICLE STOPPED IN FRONT OF ME TO STAND HARD ON THE BRAKE AND BRING THE CAR TO A STOP. SCARY!!. FLOOR MATS WERE PROPERLY SECURED AND NO WHERE NEAR THE PEDAL AREA. NEVER EXPERIENCED ANYTHING LIKE THIS BEFORE. TOYOTA HAS A PROBLEM WAY BEYOND FLOOR MATS.
Additional Summary:

Toyota ID No:
NHTSA ODI No: 10295516
Date of Incident: 20091209
Vehicle: 2008 LEXUS ES350
Location of Incident: PITTSBURGH, PA
NHTSA Summary:
2008 LEXUS 350 UNEXPECTED ACCELERATION, MOVING SLOW IN PARKING LOT PULLING INTO PARKING SPACE. LIGHT PRESSURE ON BRAKE, ENGINE WENT TO HIGH RPM CAR ACCELERATED PUSHED HARD ON BRAKE, PUT IN NEUTRAL. ENGINE WENT BACK TO IDLE. MY BUMPER HIT UNOCCUPIED PARKED CAR IN FRONT OF ME. DEALER DENIES ANYTHING WRONG. *TR
Additional Summary:

Toyota ID No:
NHTSA ODI No: 10296779
Date of Incident: 20091217
Vehicle: 2007 TOYOTA PRIUS
Location of Incident: MERIDITH, NH
NHTSA Summary:
OUR LEASED 2007TOYOTA PRIUS SOMETIMES "JUMPS" FORWARD UNEXPECTEDLY WHEN GOING OVER A STONE OR BUMP ON A DIRT ROAD OR OTHER STREET, BRIEFLY INCREASING ACCELERATION. THIS HAS HAPPENED WHEN TRAVELING A STRAIGHT ROAD AND ALSO WHEN TAKING A CORNER INTO A DIRT ROAD, BRAKING DOESN'T SLOW DOWN THE ACCELERATION, INCREASING THE CHANCE OF A COLLISION WITH A VEHICLE OR OTHER OBSTRUCTION THAT MAY BE IN FRONT OF OUR CAR. *TR
Additional Summary:

Toyota ID No:
NHTSA ODI No: 10296355
Date of Incident: 20091216
Vehicle: 2009 TOYOTA TACOMA
Location of Incident: SAN FRANCISCO, CA
NHTSA Summary:
FIVE MONTHS OLD 2009 TOYOTA TACOMA FREERUNNER, V6 5-SPEED AUTOMATIC TRANSMISSION. HAD MADE SHORT TRIP FROM HOME AND WAS RETURNING. PROCEEDING DOWN SLIGHT GRADE ABOUT THREE BLOCKS FROM HOME MANUALLY DOWNSHIFTED FROM DRIVE TO 4TH, SEEING RED SIGNAL, NEUTRAL. BLOCKS AHEAD DOWNSHIFTED AGAIN TO 3RD, THEN 2ND, SLOWING ENOUGH SO AS TO HAVE GREEN LIGHT AT INTERSECTION. MADE BRAKING RIGHT TURN AT INTERSECTION, AWARE FROM EXPERIENCE THAT I WOULD NOW HAVE RED LIGHT AT NEXT INTERSECTION AND WOULD HAVE TO STOP. AGAIN SLIGHT DOWNGRADE AFTER MAKING TURN. TRUCK REQUIRED MORE THAN NORMAL BRAKING TO SLOW PROPERLY AFTER TURN. FINALLY USED BOTH FEET TO APPLY MAXIMUM BRAKE PRESSURE. TRUCK STOPPED, BUT AFTER STOPPING ENGINE SURGED REPEATEDLY, CAUSING REAR WHEELS TO INTERMITTENTLY SPIN UNCONTROLLABLY ON DAMP PAVEMENT. ONLY TRUCK WHEEL BRAKES WERE HOLDING TRUCK FROM CRASHING INTO ANOTHER VEHICLE. MANAGED TO SHIFT INTO PARK AND SHUT OFF ENGINE. WHEN RESTARTED, OPERATION WAS NORMAL. FLOOR MATS NOT INVOLVED! ENGINE WAS REPEATEDLY SURGING AND RETURNING TO NORMAL RPM, BOTH FEET WERE ON BRAKE PEDAL AND NOT ON ACCELERATOR. ODOMETER: 1850. CONDITIONS: NIGHT, HEADLIGHTS ON, HEATER BLOWER ON, A/C OFF, RADIO OFF. DUE TO SHORTNESS OF TRIP ENGINE WAS MOST LIKELY NOT FULLY WARMED UP TO NORMAL OPERATING TEMPERATURE. AFTER ARRIVING HOME TOOK TRUCK OUT FOR ANOTHER SHORT TRIP OVER SAME ROUTE. UNABLE TO REPLICATE SITUATION. AS REPORTED ELECTRONICS TECHNICIAN UNDERSTANDS HOW DIFFICULT THIS TYPE OF INTERMITTENT ISSUE IS FOR TOYOTA TO REPLICATE OR CONFIRM, BUT IT IS HAPPENING, AND IT IS A MAJOR SAFETY ISSUE, NHTSA. AND EF IS A LOT MORE THAN "FLOOR MATS". FLOOR MATS MIGHT OCCASIONALLY CATCH AN ACCELERATOR PEDAL, BUT THEY DON'T MAKE AN ENGINE REPEATEDLY SURGE. BEEN DRIVING 59 YEARS... KNOW IT WHEN I SEE IT. *TR
Additional Summary:

Toyota ID No:
NHTSA ODI No: 10299750
Date of Incident: 20091221
Vehicle: 2009 TOYOTA CAMRY
Location of Incident: ELKRIDGE, MD
NHTSA Summary:
I WAS IN A PARKING LOT OF A SHOPPING COMPLEX AND I WAS TRYING TO LOOK FOR A PARKING SPOT. THERE WAS A PARKING SPOT BETWEEN 2 CARS ON THE RIGHT. SINE, I SLOWLY TURNED RIGHT INTO THE SPOT, THE CAR WAS IN THE SPOT AND THE CAR WAS STRAIGHT AND MY LEG WAS ON THE BRAKES. UNEXPECTEDLY THE CAR STARTED ACCELERATING ON ITS OWN, THEN THE CAR WITH GREAT SPEED CLIMBED UP THE CURB AND HIT THE HAIR SALON SHOP. THE SHOP HAD 2-3 FEET HIGH BRICK WALL AND MAIN DOOR AND OTHER THINGS ARE MADE WITH GLASS AND METAL FRAMES. THE CAR SMASHED THE WALL AND GLASS DOOR COMPLETELY AND LANDED INSIDE THE SHOP. I HAD TO PRESS THE BRAKES REALLY HARD AND FINALLY IT STOPPED. THERE WAS A TIRE BURNING SMELL. I SAW THERE WAS BIG DRAG TIRE MARK ON THE SHOP FLOOR. THE AIR BAGS DID NOT OPEN. FORTUNATELY NOBODY WAS INJURED NOR THERE WAS ANY DAMAGES TO OTHER CARS IN THE PARKING LOT. I HAD RECEIVED A RECALL LETTER FROM TOYOTA 1-2 MONTHS BACK AND IT INDICATED THAT THE DRIVER SIDE FLOOR MAT CAN INTERFERE WITH THE GAS PEDAL AND IT HAD SUGGESTED TO REMOVE THE FLOOR MAT AND KEEP IT IN THE TRUNKS UNTIL FURTHER NOTICE. THEN I HAD REMOVED ALL

THE FLOOR MATS AND WERE IN THE TRUNK AT THE TIME OF ACCIDENT. IT IS A 2009 TOYOTA CAMRY BOUGHT NEW AND DID REGULAR MAINTENANCE AT TOYOTA DEALERSHIP. THE CAR IS NOW IN 253 TOYOTA DEALERSHIP IN MARYLAND AND TOYOTA HAS OPENED A CASE AND ARE INVESTIGATING THE CASE ON 01/18/2010.
Additional Summary:

Toyota ID No:
NHTSA ODI No: 10300220
Date of Incident: 20091228
Vehicle: 2007 TOYOTA AVALON
Location of Incident: PITTSTOWN, NJ
NHTSA Summary:
NHTSA COMPLAINT
I OWN A 2007 AVALON. IN THE PAST 6 MONTHS I HAVE EXPERIENCED 5 EVENTS WHERE THE CAR ACCELERATED ON ITS OWN PRIOR TO THE FINAL EVENTS LEADING UP TO THIS REPORT. SEVERAL TIMES I EXPERIENCED THE CAR ACCELERATING WITHOUT MY FOOT ON THE GAS PEDAL AS I DROVE THROUGH TOWN. THE CAR WOULD GO BACK TO ITS CORRECT SPEED AFTER DRIVING A FEW MILES OR AFTER THE CAR WAS STOPPED AND PUT INTO PARK. AFTER EXPERIENCING THE SUDDEN ACCELERATION THE THIRD TIME I TOOK MY VEHICLE TO BE CHECKED AT MY LOCAL AUTO SHOP. THEY COULD NOT FIND ANYTHING WRONG WITH THE VEHICLE. AFTER 2 MORE INCIDENTS I BROUGHT MY CAR TO A TOYOTA DEALERSHIP (1/11/09) TO BE CHECKED. AFTER KEEPING MY CAR FOR 2 DAYS THEY FOUND NO UNINTENDED ACCELERATION PROBLEMS AND CONFIRMED THAT THE FACTORY MATS ARE INSTALLED PROPERLY. THEN ON 12/28/09 I WAS DRIVING TO WORK ON A MAJOR HIGHWAY. THE CAR BEGAN TO ACCELERATE WITHOUT MY FOOT ON THE GAS PEDAL. AS I PUSHED ON THE BRAKE, THE CAR CONTINUED TO ACCELERATE. AT THAT TIME I WAS NOT ABLE TO STOP MY VEHICLE BY PRESSING HARD ON THE BRAKE. THE ONLY WAY I WAS ABLE TO SLOW THE CAR DOWN WAS TO PUT THE CAR INTO NEUTRAL. I TOOK THE NEXT EXIT WHICH WAS THE EXIT FOR THE TOYOTA DEALERSHIP. I CALLED THE DEALERSHIP AND TOLD THE SERVICE MANAGER TO MEET ME OUTSIDE BECAUSE I WAS EXPERIENCING ACCELERATION PROBLEMS. I DROVE APPROXIMATELY 5 MILES BY ALTERNATING FROM NEUTRAL TO DRIVE AND PRESSING VERY GENTLY ON THE BRAKES. AS I PULLED INTO THE FRONT OF THE DEALERSHIP I PUT THE CAR INTO NEUTRAL AND EXITED THE CAR, WITH THE BRAKES SMOKING FROM THE EXCESSIVE BRAKING AND THE CAR'S RPM'S RACING. THE MANGER ENTERED MY CAR. HE CONFIRMED THAT THE MATS WERE PROPERLY IN PLACE AND CONFIRMED THE RPM'S WERE VERY HIGH. THEY CONTACTED A TOYOTA TECH TO LOOK AT MY CAR. AFTER 1 1/2 WEEKS WITH MY CAR, THEY WERE TOLD BY TOYOTA TO REPLACE THE THROTTLE BODY AND ACCELERATOR ASSEMBLY INCLUDING BOTH SENSORS. I NO LONGER FEEL SAFE DRIVING THIS CAR AND I AM NOT CONVINCED THAT TOYOTA HAS FOUND THE ROOT CAUSE OF THIS PROBLEM.
Additional Summary:

Toyota ID No:
NHTSA ODI No: 10298763
Date of Incident: 20100102
Vehicle: 2006 TOYOTA TACOMA
Location of Incident: WHITE, WV
NHTSA Summary:
TL:THE CONTACT OWNS A 2006 TOYOTA TACOMA. WHILE DRIVING APPROXIMATELY 5 MPH IN HIS GARAGE, THE VEHICLE ACCELERATED AND CRASHED THE FRONT END OF THE VEHICLE INTO A WALL. THE CONTACT DOES NOT HAVE FLOOR MATS. THE INCIDENT

HAPPENED WHILE DRIVING INTO THE GARAGE AND ENGAGING THE BRAKES TO SLOW DOWN. THE CURRENT AND FAILURE MILEAGES WERE 41687.
Additional Summary:

Toyota ID No:
NHTSA ODI No: 10298159
Date of Incident: 20100104
Vehicle: 2009 TOYOTA TACOMA
Location of Incident: AMES, IA
NHTSA Summary:
PULLING INTO A PARKING SPACE AT HY-VEE GROCERY STORE IN MOUNT PLEASANT, IA AT A LOW RATE OF SPEED(<5MPH) MY 09' TOYOTA TACOMA ACCELERATED INTO A GROCERY CART STALL. I HAD APPLIED THE BRAKES WITH NO RESULTS AND AFTER A ONE SECOND LULL THE TRUCK ACCELERATED QUICKLY INTO THE MOVABLE OBSTRUCTION. I HAVE HAD PREVIOUS CONCERNS ABOUT THE RATE OF ACCELERATION BY THE AMOUNT OF PRESSURE APPLIED TO THE ACCELERATIOR. THERE HAVE BEEN TIMES WHERE LIGHT PRESSURE ACCELERATES THE CAR AT A FASTER RATE AND TIMES WHERE HEAVIER PRESSURE DOESN'T GET ENOUGH RESPONSE IN ACCELERATION. FLOORMATS ARE SECURED DOWN AND NO ISSUES HAVE BEEN FOUND BY THE DEALERSHIP I HAD PURCHASED IT FROM. *TR
Additional Summary:

APPENDIX C:
Toyota Vehicles with ETCS-i

Year	Make	Model	Engine	ETCS-i
1998	Lexus	GS300	2JZ-GE	Yes
1998	Lexus	GS400	1UZ-FE	Yes
1998	Lexus	IS400	1UZ-FE	Yes
1998	Lexus	LX470	2UZ-FE	Yes
1998	Lexus	SC300	2JZ-GE	Yes
1998	Lexus	SC400	1UZ-FE	Yes
1998	Lexus	SC400	2JZ-GE	Yes
1998	Toyota	Land Cruiser	2UZ-FE	Yes
1998	Toyota	Sienna	1MZ-FE	No
1998	Toyota	Supra	2JZ-GE	Yes
1998	Toyota	Supra	2JZ-GTE	No
1999	Lexus	ES300	1MZ-FE	No
1999	Lexus	GS300	2JZ-GE	Yes
1999	Lexus	GS400	1UZ-FE	Yes
1999	Lexus	IS400	1UZ-FE	Yes
1999	Lexus	LX470	2UZ-FE	Yes
1999	Lexus	RX300	1MZ-FE	No
1999	Lexus	SC300	2JZ-GE	Yes
1999	Lexus	SC400	1UZ-FE	Yes
1999	Toyota	Camry	1MZ-FE	No
1999	Toyota	Camry	5S-FE	No
1999	Toyota	Land Cruiser	2UZ-FE	Yes
1999	Toyota	RAV4	3S-FE	No
1999	Toyota	Sienna	1MZ-FE	No
1999	Toyota	Tacoma	2RZ-FE	UNK
1999	Toyota	Tacoma	3RZ-FE	UNK
1999	Toyota	Tacoma	5VZ-FE	UNK
2000	Lexus	ES300	1MZ-FE	No
2000	Lexus	GS300	2JZ-GE	Yes
2000	Lexus	GS400	1UZ-FE	Yes
2000	Lexus	IS400	1UZ-FE	Yes
2000	Lexus	LX470	2UZ-FE	Yes
2000	Lexus	RX300	1MZ-FE	No
2000	Lexus	SC300	2JZ-GE	Yes
2000	Lexus	SC400	1UZ-FE	Yes
2000	Toyota	Avalon	1MZ-FE	No
2000	Toyota	Camry	1MZ-FE	No
2000	Toyota	Camry	5S-FE	No
2000	Toyota	Camry	5S-FNE	No
2000	Toyota	Celica	1ZZ-FE	No
2000	Toyota	Celica	2ZZ-GE	No
2000	Toyota	Corolla	1ZZ-FE	No
2000	Toyota	Echo	1NZ-FE	No
2000	Toyota	Land Cruiser	2UZ-FE	Yes
2000	Toyota	MR2 Spyder	1ZZ-FE	No
2000	Toyota	RAV4	3S-FE	UNK
2000	Toyota	Sienna	1MZ-FE	No
2000	Toyota	Tacoma	2RZ-FE	UNK
2000	Toyota	Tacoma	3RZ-FE	UNK
2000	Toyota	Tacoma	5VZ-FE	UNK

Safety Research Strategies
*Based on Toyota Motor Sales Inc., technical service documents

APPENDIX C:
Toyota Vehicles with ETCS-i

2000	Toyota	Tundra	2UZ-FE	Yes
2000	Toyota	Tundra	5VZ-FE	No
2001	Lexus	ES300	1MZ-FE	No
2001	Lexus	GS300	2JZ-GE	Yes
2001	Lexus	GS430	3UZ-FE	Yes
2001	Lexus	IS300	2JZ-GE	Yes
2001	Lexus	LS430	3UZ-FE	Yes
2001	Lexus	LX470	2UZ-FE	Yes
2001	Lexus	LX470	2UZ-FE	Yes
2001	Lexus	RX300	1MZ-FE	No
2001	Toyota	4Runner	5VZ-FE	Yes
2001	Toyota	Avalon	1MZ-FE	No
2001	Toyota	Camry	1MZ-FE	No
2001	Toyota	Camry	5S-FE	No
2001	Toyota	Camry	5S-FNE	No
2001	Toyota	Celica	1ZZ-FE	No
2001	Toyota	Celica	2ZZ-GE	No
2001	Toyota	Corolla	1ZZ-FE	No
2001	Toyota	Echo	1NZ-FE	No
2001	Toyota	Highlander	1MZ-FE	No
2001	Toyota	Highlander	2AZ-FE	No
2001	Toyota	Land Cruiser	2UZ-FE	Yes
2001	Toyota	MR2 Spyder	1ZZ-FE	Yes
2001	Toyota	Prius	1NZ-FXE	Yes
2001	Toyota	RAV4	1AZ-FE	No
2001	Toyota	Sequoia	2UZ-FE	Yes
2001	Toyota	Sienna	1MZ-FE	No
2001	Toyota	Solara	5S-FE	UNK
2001	Toyota	Solara	1MZ-FE	UNK
2001	Toyota	Tacoma	2RZ-FE	UNK
2001	Toyota	Tacoma	3RZ-FE	UNK
2001	Toyota	Tacoma	5VZ-FE	UNK
2001	Toyota	Tundra	2UZ-FE	Yes
2001	Toyota	Tundra	5VZ-FE	No
2002	Lexus	ES300	1MZ-FE	Yes
2002	Lexus	GS300	2JZ-GE	Yes
2002	Lexus	GS430	3UZ-FE	Yes
2002	Lexus	IS300	2JZ-GE	Yes
2002	Lexus	LS430	3UZ-FE	Yes
2002	Lexus	LX470	2UZ-FE	Yes
2002	Lexus	RX300	1MZ-FE	No
2002	Lexus	SC430	3UZ-FE	Yes
2002	Toyota	4Runner	5VZ-FE	Yes
2002	Toyota	Avalon	1MZ-FE	No
2002	Toyota	Camry	1MZ-FE	Yes
2002	Toyota	Camry	2AZ-FE	Yes
2002	Toyota	Celica	1ZZ-FE	No
2002	Toyota	Celica	2ZZ-GE	No
2002	Toyota	Corolla	1ZZ-FE	No
2002	Toyota	Echo	1NZ-FE	No
2002	Toyota	Highlander	2AZ-FE	No
2002	Toyota	Land Cruiser	2UZ-FE	Yes

Safety Research Strategies
*Based on Toyota Motor Sales Inc., technical service documents

APPENDIX C:
Toyota Vehicles with ETCS-i

2002	Toyota	MR2 Spyder	1ZZ-FE	Yes
2002	Toyota	Prius	1NZ-FXE	Yes
2002	Toyota	RAV4	1AZ-FE	No
2002	Toyota	Sequoia	2UZ-FE	Yes
2002	Toyota	Sienna	1MZ-FE	No
2002	Toyota	Solara	2AZ-FE	Yes
2002	Toyota	Solara	1MZ-FE	No
2002	Toyota	Tacoma	2RZ-FE	No
2002	Toyota	Tacoma	3RZ-FE	No
2002	Toyota	Tacoma	5VZ-FE	No
2002	Toyota	Tundra	2UZ-FE	Yes
2002	Toyota	Tundra	5VZ-FE	No
2003	Lexus	ES300	1MZ-FE	Yes
2003	Lexus	GS300	2JZ-GE	Yes
2003	Lexus	GS430	3UZ-FE	Yes
2003	Lexus	GX470	2UZ-FE	Yes
2003	Lexus	IS300	2JZ-GE	Yes
2003	Lexus	LS430	3UZ-FE	Yes
2003	Lexus	LX470	2UZ-FE	Yes
2003	Lexus	RX300	1MZ-FE	No
2003	Lexus	SC430	3UZ-FE	Yes
2003	Toyota	4Runner	1GR-FE	Yes
2003	Toyota	4Runner	2UZ-FE	Yes
2003	Toyota	Avalon	1MZ-FE	No
2003	Toyota	Camry	1MZ-FE	Yes
2003	Toyota	Camry	2AZ-FE	Yes
2003	Toyota	Celica	1ZZ-FE	No
2003	Toyota	Celica	2ZZ-GE	Yes
2003	Toyota	Corolla	1ZZ-FE	No
2003	Toyota	Echo	1NZ-FE	No
2003	Toyota	Highlander	1MZ-FE	No
2003	Toyota	Highlander	2AZ-FE	No
2003	Toyota	Land Cruiser	2UZ-FE	Yes
2003	Toyota	Matrix	1ZZ-FE	No
2003	Toyota	Matrix	2ZZ-GE	No
2003	Toyota	MR2 Spyder	1ZZ-FE	Yes
2003	Toyota	Prius	1NZ-FXE	Yes
2003	Toyota	RAV4	1AZ-FE	No
2003	Toyota	Sequoia	2UZ-FE	Yes
2003	Toyota	Sienna	1MZ-FE	No
2003	Toyota	Solara	2AZ-FE	Yes
2003	Toyota	Solara	1MZ-FE	No
2003	Toyota	Tacoma	2RZ-FE	No
2003	Toyota	Tacoma	3RZ-FE	No
2003	Toyota	Tacoma	5VZ-FE	Yes
2003	Toyota	Tundra	2UZ-FE	Yes
2003	Toyota	Tundra	5VZ-FE	Yes
2004	Lexus	ES330	3MZ-FE	Yes
2004	Lexus	GS300	2JZ-GE	Yes
2004	Lexus	GS430	3UZ-FE	Yes
2004	Lexus	GX470	2UZ-FE	Yes
2004	Lexus	IS300	2JZ-GE	Yes

Safety Research Strategies
*Based on Toyota Motor Sales Inc., technical service documents

APPENDIX C:
Toyota Vehicles with ETCS-i

2004	Lexus	LS430	3UZ-FE	Yes
2004	Lexus	LX470	2UZ-FE	Yes
2004	Lexus	RX330	3MZ-FE	Yes
2004	Lexus	SC430	3UZ-FE	Yes
2004	Scion	xA	1NZ-FE	No
2004	Scion	xB	1NZ-FE	No
2004	Toyota	4Runner	1GR-FE	Yes
2004	Toyota	4Runner	2UZ-FE	Yes
2004	Toyota	Avalon	1MZ-FE	No
2004	Toyota	Camry	1MZ-FE	Yes
2004	Toyota	Camry	2AZ-FE	Yes
2004	Toyota	Camry	3MZ-FE	Yes
2004	Toyota	Celica	1ZZ-FE	No
2004	Toyota	Celica	2ZZ-GE	Yes
2004	Toyota	Corolla	1ZZ-FE	No
2004	Toyota	Echo	1NZ-FE	No
2004	Toyota	Highlander	2AZ-FE	Yes
2004	Toyota	Highlander	3MZ-FE	Yes
2004	Toyota	Land Cruiser	2UZ-FE	Yes
2004	Toyota	Matrix	1ZZ-FE	No
2004	Toyota	Matrix	2ZZ-GE	No
2004	Toyota	MR2 Spyder	1ZZ-FE	Yes
2004	Toyota	Prius	1NZ-FXE	Yes
2004	Toyota	RAV4	2AZ-FE	Yes
2004	Toyota	Sequoia	2UZ-FE	Yes
2004	Toyota	Sienna	3MZ-FE	Yes
2004	Toyota	Solara	3MZ-FE	Yes
2004	Toyota	Tacoma	2RZ-FE	No
2004	Toyota	Tacoma	3RZ-FE	No
2004	Toyota	Tacoma	5VZ-FE	Yes
2004	Toyota	Tundra	2UZ-FE	Yes
2004	Toyota	Tundra	5VZ-FE	Yes
2004	Toyota	Yaris	1SZ-FE	Yes
2005	Lexus	ES330	3MZ-FE	Yes
2005	Lexus	GS300	2JZ-GE	Yes
2005	Lexus	GS430	3UZ-FE	Yes
2005	Lexus	GX470	2UZ-FE	Yes
2005	Lexus	IS300	2JZ-GE	Yes
2005	Lexus	LS430	3UZ-FE	Yes
2005	Lexus	RX330	3MZ-FE	Yes
2005	Lexus	SC430	3UZ-FE	Yes
2005	Scion	tC	2AZ-FE	Yes
2005	Scion	xA	1NZ-FE	No
2005	Scion	xB	1NZ-FE	No
2005	Toyota	4Runner	1GR-FE	Yes
2005	Toyota	4Runner	2UZ-FE	Yes
2005	Toyota	Avalon	2GR-FE	Yes
2005	Toyota	Camry	1MZ-FE	Yes
2005	Toyota	Camry	2AZ-FE	Yes
2005	Toyota	Camry	3MZ-FE	Yes
2005	Toyota	Celica	1ZZ-FE	No
2005	Toyota	Celica	2ZZ-GE	Yes

Safety Research Strategies
*Based on Toyota Motor Sales Inc., technical service documents

APPENDIX C:
Toyota Vehicles with ETCS-i

2005	Toyota	Corolla	1ZZ-FE	Yes
2005	Toyota	Corolla	2ZZ-GE	No
2005	Toyota	Echo	1NZ-FE	No
2005	Toyota	Highlander	2AZ-FE	Yes
2005	Toyota	Highlander	3MZ-FE	Yes
2005	Toyota	Land Cruiser	2UZ-FE	Yes
2005	Toyota	Matrix	1ZZ-FE	Yes
2005	Toyota	Matrix	2ZZ-GE	No
2005	Toyota	MR2 Spyder	1ZZ-FE	Yes
2005	Toyota	Prius	1NZ-FXE	Yes
2005	Toyota	RAV4	2AZ-FE	Yes
2005	Toyota	Sequoia	2UZ-FE	Yes
2005	Toyota	Sienna	3MZ-FE	Yes
2005	Toyota	Solara	2AZ-FE	Yes
2005	Toyota	Solara	3MZ-FE	Yes
2005	Toyota	Tacoma	1GR-FE	Yes
2005	Toyota	Tacoma	2TR-FE	Yes
2005	Toyota	Tundra	1GR-FE	Yes
2005	Toyota	Tundra	2UZ-FE	Yes
2005	Toyota	Yaris	1SZ-FE	Yes
2006	Lexus	ES330	3MZ-FE	Yes
2006	Lexus	GS300	3GR-FSE	Yes
2006	Lexus	GS430	3UZ-FE	Yes
2006	Lexus	GX470	2UZ-FE	Yes
2006	Lexus	IS250	4GR-FSE	Yes
2006	Lexus	IS350	2GR-FSE	Yes
2006	Lexus	LS430	3UZ-FE	Yes
2006	Lexus	LX470	2UZ-FE	Yes
2006	Lexus	RX330	3MZ-FE	Yes
2006	Lexus	RX400h	3MZ-FE	Yes
2006	Lexus	SC430	3UZ-FE	Yes
2006	Scion	tC	2AZ-FE	Yes
2006	Scion	xA	1NZ-FE	No
2006	Scion	xB	1NZ-FE	No
2006	Toyota	4Runner	1GR-FE	Yes
2006	Toyota	4Runner	2UZ-FE	Yes
2006	Toyota	Avalon	2GR-FE	Yes
2006	Toyota	Camry	1MZ-FE	Yes
2006	Toyota	Camry	2AZ-FE	Yes
2006	Toyota	Camry	3MZ-FE	Yes
2006	Toyota	Corolla	2ZZ-GE	No
2006	Toyota	Corolla	1ZZ-FE	Yes
2006	Toyota	Corolla	1ZZ-FE	Yes
2006	Toyota	Highlander	2AZ-FE	Yes
2006	Toyota	Highlander	3MZ-FE	Yes
2006	Toyota	Highlander HV	3MZ-FE	Yes
2006	Toyota	Land Cruiser	2UZ-FE	Yes
2006	Toyota	Matrix	1ZZ-FE	Yes
2006	Toyota	Matrix	1ZZ-FE (4WD)	No
2006	Toyota	Matrix	1ZZ-FE (4WD)	No
2006	Toyota	Matrix	1ZZ-FE (4WD)	No
2006	Toyota	Matrix	2ZZ-GE	No

Safety Research Strategies
*Based on Toyota Motor Sales Inc., technical service documents

APPENDIX C:
Toyota Vehicles with ETCS-i

2006	Toyota	Prius	1NZ-FXE	Yes
2006	Toyota	RAV4	2AZ-FE	Yes
2006	Toyota	RAV4	2GR-FE	Yes
2006	Toyota	Sequoia	2UZ-FE	Yes
2006	Toyota	Sienna	3MZ-FE	Yes
2006	Toyota	Solara	2AZ-FE	Yes
2006	Toyota	Solara	3MZ-FE	Yes
2006	Toyota	Tacoma	1GR-FE	Yes
2006	Toyota	Tacoma	2TR-FE	Yes
2006	Toyota	Tundra	1GR-FE	Yes
2006	Toyota	Tundra	2UZ-FE	Yes
2006	Toyota	Yaris	1NZ-FE	Yes
2007	Lexus	ES350	2GR-FE	Yes
2007	Lexus	GS350	2GR-FSE	Yes
2007	Lexus	GS430	3UZ-FE	Yes
2007	Lexus	GS450h	2GR-FSE	Yes
2007	Lexus	GX470	2UZ-FE	Yes
2007	Lexus	IS250	4GR-FSE	Yes
2007	Lexus	IS350	2GR-FSE	Yes
2007	Lexus	LS460	1UR-FSE	Yes
2007	Lexus	LX470	2UZ-FE	Yes
2007	Lexus	RX350	2GR-FE	Yes
2007	Lexus	RX400h	3MZ-FE	Yes
2007	Lexus	SC430	3UZ-FE	Yes
2007	Scion	tC	2AZ-FE	Yes
2007	Toyota	4Runner	1GR-FE	Yes
2007	Toyota	4Runner	2UZ-FE	Yes
2007	Toyota	Avalon	2GR-FE	Yes
2007	Toyota	Avanza	3SZ-VE	No
2007	Toyota	Avanza	K3-VE	No
2007	Toyota	Camry	2AZ-FE	Yes
2007	Toyota	Camry	2GR-FE	Yes
2007	Toyota	Camry HV	2AZ-FXE	Yes
2007	Toyota	Corolla	1ZZ-FE	Yes
2007	Toyota	FJ Cruiser	1GR-FE	Yes
2007	Toyota	Highlander	2AZ-FE	Yes
2007	Toyota	Highlander	3MZ-FE	Yes
2007	Toyota	Highlander HV	3MZ-FE	Yes
2007	Toyota	Land Cruiser	2UZ-FE	Yes
2007	Toyota	Matrix	1ZZ-FE	Yes
2007	Toyota	Prius	1NZ-FXE	Yes
2007	Toyota	RAV4	2AZ-FE	Yes
2007	Toyota	RAV4	2GR-FE	Yes
2007	Toyota	Sequoia	2UZ-FE	Yes
2007	Toyota	Sienna	2GR-FE	Yes
2007	Toyota	Solara	2AZ-FE	Yes
2007	Toyota	Solara	3MZ-FE	Yes
2007	Toyota	Tacoma	1GR-FE	Yes
2007	Toyota	Tacoma	2TR-FE	Yes
2007	Toyota	Tundra	1GR-FE	Yes
2007	Toyota	Tundra	2UZ-FE	Yes
2007	Toyota	Tundra	3UR-FE	Yes

Safety Research Strategies
*Based on Toyota Motor Sales Inc., technical service documents

APPENDIX C:
Toyota Vehicles with ETCS-i

2007	Toyota	Yaris	1NZ-FE	Yes
2008	Lexus	ES350	2GR-FE	Yes
2008	Lexus	GS350	2GR-FSE	Yes
2008	Lexus	GS450h	2GR-FSE	Yes
2008	Lexus	GS460	1UR-FSE	Yes
2008	Lexus	GX470	2UZ-FE	Yes
2008	Lexus	IS F	2UR-GSE	Yes
2008	Lexus	IS250	4GR-FSE	Yes
2008	Lexus	IS350	2GR-FSE	Yes
2008	Lexus	LS460	1UR-FSE	Yes
2008	Lexus	LS600h	2UR-FSE	Yes
2008	Lexus	LX570	3UR-FE	Yes
2008	Lexus	RX350	2GR-FE	Yes
2008	Lexus	RX400h	3MZ-FE	Yes
2008	Lexus	SC430	3UZ-FE	Yes
2008	Scion	tC	2AZ-FE	Yes
2008	Scion	tC	2AZ-FE	Yes
2008	Scion	xB	2AZ-FE	Yes
2008	Scion	xD	2ZR-FE	Yes
2008	Toyota	4Runner	1GR-FE	Yes
2008	Toyota	4Runner	2UZ-FE	Yes
2008	Toyota	Avalon	2GR-FE	Yes
2008	Toyota	Avanza	3SZ-VE	No
2008	Toyota	Avanza	K3-VE	No
2008	Toyota	Camry	2AZ-FE	Yes
2008	Toyota	Camry	2GR-FE	Yes
2008	Toyota	Camry HV	2AZ-FXE	Yes
2008	Toyota	Corolla	1ZZ-FE	Yes
2008	Toyota	FJ Cruiser	1GR-FE	Yes
2008	Toyota	Highlander	2GR-FE	Yes
2008	Toyota	Highlander HV	3MZ-FE	Yes
2008	Toyota	Land Cruiser	3UR-FE	Yes
2008	Toyota	Matrix	1ZZ-FE	Yes
2008	Toyota	Prius	1NZ-FXE	Yes
2008	Toyota	RAV4	2AZ-FE	Yes
2008	Toyota	RAV4	2GR-FE	Yes
2008	Toyota	Sequoia	2UZ-FE	Yes
2008	Toyota	Sequoia	3UR-FE	Yes
2008	Toyota	Sienna	2GR-FE	Yes
2008	Toyota	Solara	2AZ-FE	Yes
2008	Toyota	Solara	3MZ-FE	Yes
2008	Toyota	Tacoma	1GR-FE	Yes
2008	Toyota	Tacoma	2TR-FE	Yes
2008	Toyota	Tundra	1GR-FE	Yes
2008	Toyota	Tundra	2UZ-FE	Yes
2008	Toyota	Tundra	3UR-FE	Yes
2008	Toyota	Yaris	1NZ-FE	Yes
2009	Lexus	ES350	2GR-FE	Yes
2009	Lexus	GS350	2GR-FSE	Yes
2009	Lexus	GS450h	2GR-FSE	Yes
2009	Lexus	GS460	1UR-FSE	Yes
2009	Lexus	GX470	2UZ-FE	Yes

Safety Research Strategies
*Based on Toyota Motor Sales Inc., technical service documents

APPENDIX C:
Toyota Vehicles with ETCS-i

2009	Lexus	IS F	2UR-GSE	Yes
2009	Lexus	IS250	4GR-FSE	Yes
2009	Lexus	IS350	2GR-FSE	Yes
2009	Lexus	LS460	1UR-FSE	Yes
2009	Lexus	LS600h	2UR-FSE	Yes
2009	Lexus	LX570	3UR-FE	Yes
2009	Lexus	RX350	2GR-FE	Yes
2009	Lexus	SC430	3UZ-FE	Yes
2009	Scion	xB	2AZ-FE	Yes
2009	Scion	xD	2ZR-FE	Yes
2009	Toyota	4Runner	1GR-FE	Yes
2009	Toyota	4Runner	2UZ-FE	Yes
2009	Toyota	Avalon	2GR-FE	Yes
2009	Toyota	Avanza	3SZ-VE	No
2009	Toyota	Avanza	K3-VE	No
2009	Toyota	Camry	2AZ-FE	Yes
2009	Toyota	Camry	2GR-FE	Yes
2009	Toyota	Camry HV	2AZ-FXE	Yes
2009	Toyota	Corolla	2AZ-FE	Yes
2009	Toyota	Corolla	2ZR-FE	Yes
2009	Toyota	FJ Cruiser	1GR-FE	Yes
2009	Toyota	Highlander	1AR-FE	Yes
2009	Toyota	Highlander	2GR-FE	Yes
2009	Toyota	Highlander HV	3MZ-FE	Yes
2009	Toyota	Land Cruiser	3UR-FE	Yes
2009	Toyota	Matrix	2AZ-FE	Yes
2009	Toyota	Matrix	2ZR-FE	Yes
2009	Toyota	Prius	1NZ-FXE	Yes
2009	Toyota	RAV4	2AR-FE	Yes
2009	Toyota	RAV4	2GR-FE	Yes
2009	Toyota	Sequoia	2UZ-FE	Yes
2009	Toyota	Sequoia	3UR-FBE	Yes
2009	Toyota	Sequoia	3UR-FE	Yes
2009	Toyota	Sienna	2GR-FE	Yes
2009	Toyota	Tacoma	1GR-FE	Yes
2009	Toyota	Tacoma	2TR-FE	Yes
2009	Toyota	Tundra	1GR-FE	Yes
2009	Toyota	Tundra	2UZ-FE	Yes
2009	Toyota	Tundra	3UR-FBE	Yes
2009	Toyota	Tundra	3UR-FE	Yes
2009	Toyota	Venza	1AR-FE	Yes
2009	Toyota	Venza	2GR-FE	Yes
2009	Toyota	Yaris	1NZ-FE	Yes
2010	Lexus	ES350	2GR-FE	Yes
2010	Lexus	GS350	2GR-FSE	Yes
2010	Lexus	GS450h	2GR-FSE	Yes
2010	Lexus	GS460	1UR-FSE	Yes
2010	Lexus	HS250h	2AZ-FXE	Yes
2010	Lexus	IS F	2UR-GSE	Yes
2010	Lexus	IS250	4GR-FSE	Yes
2010	Lexus	IS250C	4GR-FSE	Yes
2010	Lexus	IS350	2GR-FSE	Yes

Safety Research Strategies
*Based on Toyota Motor Sales Inc., technical service documents

APPENDIX C:
Toyota Vehicles with ETCS-i

2010	Lexus	IS350C	2GR-FSE	Yes
2010	Lexus	LS460	1UR-FSE	Yes
2010	Lexus	LX570	3UR-FE	Yes
2010	Lexus	RX350	2GR-FE	Yes
2010	Lexus	RX450h	2GR-FXE	Yes
2010	Lexus	SC430	3UZ-FE	Yes
2010	Scion	tC	2AZ-FE	Yes
2010	Scion	xB	2AZ-FE	Yes
2010	Scion	xD	2ZR-FE	Yes
2010	Toyota	4Runner	1GR-FE	Yes
2010	Toyota	4Runner	2TR-FE	Yes
2010	Toyota	Avalon	2GR-FE	Yes
2010	Toyota	Avanza	3SZ-VE	No
2010	Toyota	Avanza	K3-VE	No
2010	Toyota	Camry	2AR-FE	Yes
2010	Toyota	Camry	2GR-FE	Yes
2010	Toyota	Camry HV	2AZ-FXE	Yes
2010	Toyota	Corolla	2AZ-FE	Yes
2010	Toyota	Corolla	2ZR-FE	Yes
2010	Toyota	FJ Cruiser	1GR-FE	Yes
2010	Toyota	Highlander	1AR-FE	Yes
2010	Toyota	Highlander	2GR-FE	Yes
2010	Toyota	Highlander HV	3MZ-FE	Yes
2010	Toyota	Land Cruiser	3UR-FE	Yes
2010	Toyota	Matrix	2AZ-FE	Yes
2010	Toyota	Matrix	2ZR-FE	Yes
2010	Toyota	Prius	2ZR-FXE	Yes
2010	Toyota	RAV4	2AR-FE	Yes
2010	Toyota	RAV4	2GR-FE	Yes
2010	Toyota	Sequoia	1UR-FE	Yes
2010	Toyota	Sequoia	3UR-FBE	Yes
2010	Toyota	Sequoia	3UR-FE	Yes
2010	Toyota	Sienna	2GR-FE	Yes
2010	Toyota	Tacoma	1GR-FE	Yes
2010	Toyota	Tacoma	2TR-FE	Yes
2010	Toyota	Tundra	1GR-FE	Yes
2010	Toyota	Tundra	1UR-FE	Yes
2010	Toyota	Tundra	3UR-FBE	Yes
2010	Toyota	Tundra	3UR-FE	Yes
2010	Toyota	Venza	1AR-FE	Yes
2010	Toyota	Venza	2GR-FE	Yes
2010	Toyota	Yaris	1NZ-FE	Yes

*Based on Toyota Motor Sales Inc., technical service documents

APPENDIX D:
Consumer Complaints to NHTSA, 2007-2008 MY Lexus ES350 Unintended Acceleration Incidents Occurring Jan. 2009-Jan. 2010

ODI Number	Make	Model	Vehicle Year	Crash	Date of Incident	Injury	Deaths	Component	Complainant's City	Complainant's State	VIN	Number of Occurences	NHTSA CDESC
10261660, 10263408	LEXUS	ES350	2007	N	20090203	0	0	VEHICLE SPEED CONTROL	PLYMOUTH	MN	JTHBJ46G072	1	DRIVING HOME FROM WORK, I EXPERIENCED A SUDDEN UNCONTROLLABLE SURGE IN ACCELERATION CAUSING MY SPEED TO INCREASE FROM ABOUT 60 MPH TO 80+ MPH. IMMEDIATELY I BEGAN TO BRAKE HARD AS I WAS RAPIDLY APPROACHING TRAFFIC JUST AHEAD OF ME. FORTUNATELY THE INSIDE LEFT LANE WAS UNOCCUPIED AND I WAS ABLE TO MAKE AN IMMEDIATE LANE CHANGE. INITIALLY I DEPRESSED THE BRAKE PEDAL AS HARD AS I COULD USING BOTH FEET BUT ONLY MANAGED TO SLOW THE VEHICLE TO 40-45 MPH. WITH MY SPEED REDUCED, I ALTERNATED BETWEEN PUMPING THE ACCELERATOR PEDAL AND PULLING UP ON IT FROM THE UNDERSIDE WITH MY RIGHT FOOT AS IT BECAME CLEAR THAT THE THROTTLE WAS STUCK IN AN OPEN POSITION. THE VEHICLE CONTINUED TO SPEED BACK UP TO OVER 65 MPH WITH LESS PRESSURE ON THE BRAKE PEDAL. WITH TRAFFIC JUST AHEAD OF ME, I MOVED OVER TO THE LEFT SHOULDER NEXT TO THE CENTER BARRIER AND CONTINUED TO TRY TO RELEASE THE OPEN THROTTLE. THERE WERE CLOUDS OF SMOKE AROUND THE VEHICLE AND THE SMELL OF BURNING MATERIALS FROM THE OVERHEATING BRAKES. AFTER FINALLY GETTING THE VEHICLE SLOWED DOWN TO ABOUT 25-30 MPH, I SHIFTED INTO

10260824	LEXUS	ES350	2007	N	20090218	0	0	VEHICLE SPEED CONTROL	LATHAM	NY	JTHBJ46G372	1	THERE IS A SAFETY RECALL OUT FOR THE 2007 LEXUS ES 350 IN RESPECT TO ALL WEATHER FLOOR MATS POTENTIALLY CAUSING A JAMMED ACCELERATOR (NHTSA ACTION # EA07010). THE RECALL WAS INITIATED IN SEPT. 2007. THE LAST REPORT FILED BY LEXUS WITH YOUR OFFICE INDICATED THAT THERE WERE OVER 32,000 OWNERS OUT OF 55,000 THAT THEY WERE UNABLE TO CONTACT. MY VEHICLE WAS TAKEN IN FOR SERVICING AT THE LOCAL LEXUS DEALER BY THE PREVIOUS OWNER IN AUG. 2008 AND THE DEFECTIVE MAT WAS IN PLACE. WHEN I PURCHASED THIS VEHICLE IN JANUARY OF THIS YEAR, I IMMEDIATELY CALLED THIS SAME DEALER TO HAVE MY NAME INDICATED AS THE OWNER OF RECORD. I SPECIFICALLY ASKED IF I HAD TO DO ANYTHING ELSE FOR RECALL NOTIFICATION ETC. AND WAS TOLD NO. LAST WEEK MY WIFE EXPERIENCED THE JAMMED ACCELERATOR DUE TO THE FAULTY MAT AND WAS EXTREMELY FORTUNATE THAT SHE WAS ABLE TO BRING A RUNAWAY VEHICLE DOING 80 OR 90 MPH TO A STOP WITHOUT AN ACCIDENT. I CALLED THE LEXUS DEALER IMMEDIATELY AFTER THE INCIDENT AND WAS TOLD ABOUT THE MAT PROBLEM BUT NOT ABOUT A RECALL. I FOUND OUT ABOUT THE RECALL FROM YOUR WEBSITE. I ALSO WENT TO THE NAT!
10286150	LEXUS	ES350	2007	N	20090522	0	0	VEHICLE SPEED CONTROL	SAN RAMON	CA	JTHBJ46G472	1	WHILE DRIVING ON I10 IN CA, MY MOTHER ACCELERATED TO PASS A TRUCK AND WHEN SHE EASED UP ON THE ACCELERATOR NOTHING HAPPENED. IN FACT, SHE STARTED TO ACCELERATE. SHE TRIED TO BRAKE AND PUT THE EMERGENCY BRAKE ON AND SHE KEPT GOING IN EXCESS OF 90 MPH. SHE DROVE THROUGH A REST AREA BUT WAS UNABLE TO STOP. FINALLY SHE HIT THE GAS PEDAL AGAIN AND THAT DID IT - SHE FINALLY HAD CONTROL AND SLOWED WAY DOWN. SHE DID SO MUCH DAMAGE TO THE ENGINE WHILE TRYING TO GET IT TO STOP THAT CATHEDRAL CITY LEXUS REPLACED THE WHOLE ENGINE. SHE WAS TOLD THE PROBLEM WAS CAUSED BY HER ALL WEATHER FLOOR MAT. SHE WAS NOT AWARE OF ANY RECALL ON FLOOR MATS NOR HAD TUSTIN LEXUS, WHO ALWAYS SERVICES HER CAR, EVER SAID ANYTHING TO HER AND THE MATS HAVE BEEN IN THE CAR SINCE SHE PURCHASED IT. *TR

10293670	LEXUS	ES350	2007	N	20090609	0	0	VEHICLE SPEED CONTROL	SAN MATEO	CA		1	JUNE 9, 2009 MY 2007 ES 350 LEXUS TOOK OFF WITH ME REACHING A FRIGHTENING SPEED OF 95 MILES AN HR WHEN I REACHED THE MAT UNDER MY RIGHT KNEE AND YANKED THE CARPET AND AT LAST FREED THE GAS AND BRAKE PEDAL. I KNOW THE WHERE BOTH INVOLVED AS I HIT THE BRAKES TO NO AVAIL AS THE SPEED BECAME FRIGHTENING AND KEEPING IT ON THE ROAD WAS A MIRACLE. I THINK IT IS UNACCEPTABLE THAT I DID NOT RECEIVE ANY RECALL NOTICE FOR ALMOST 4 MOST AFTER THIS INCIDENT. *TR
10291375	LEXUS	ES350	2007	N	20090721	0	0	VEHICLE SPEED CONTROL	EVANSTON	IL	JTHBJ46G872	1	MY 2007 LEXUS ES 350 ACCELERATED ON ITS OWN WHILE DRIVING ON AN IL HIGHWAY. EARLIER THAT DAY ONE OR TWO WARNING LIGHTS APPEARED AND I CALLED THE LEXUS SERVICE DEPT. A FEW QUESTIONS WERE ASKED BY THE RECEPTION OPERATOR AND I WAS TOLD THE CAR WAS SAFE TO DRIVE. ON MY RETURN HOME, THE ACCELERATION HAPPENED. MY BRAKES DID NOT SLOW THE CAR DOWN. I PUT THE CAR IN NEUTRAL WHILE PRESSING THE BRAKES AND WAS ABLE TO GET OUT OF THE TRAFFIC LANE ONTO THE SHOULDER. THE CAR FINALLY CAME TO A STOP AND I TURNED OFF THE ENGINE, CALLED AAA, AND WAS TOWED TO THE NEAREST LEXUS DEALER. AT THE SERVICE DEPT I WAS TOLD IT WAS MY FLOOR MAT AND THE MAT WAS REPLACED. THIS DID NOT SEEM A LIKELY EXPLANATION BECAUSE THE GAS PEDAL HAD SIMPLY LOCKED AND ACCELERATED ON ITS OWN. MY BRAKES WERE CHECKED AND IT WAS DETERMINED I NEEDED NEW REAR BRAKES WHICH WAS NOT A SURPRISE SINCE IT SEEMED LIKE I WAS 'KILLING' THEM IN MY ATTEMPT TO CONTROL AND SLOW DOWN THE CAR. THE MATS WERE TO HAVE BEEN EXCHANGED EARLIER WHEN THE CAR WAS TAKEN IN FOR SERVICE APPT BUT SOMEHOW THAT WAS NEGLECTED BY A DIFFERENT LEXUS DEALER. *TR

APPENDIX D:
Consumer Complaints to NHTSA, 2007-2008 MY Lexus ES350 Unintended Acceleration Incidents Occurring Jan. 2009-Jan. 2010

10278567	LEXUS	ES350	2007	Y	20090725	1	0	VEHICLE SPEED CONTROL	NORTH HAVEN	CT	JTHBJ46G072		TL*THE CONTACT OWNS A 2007 LEXUS ES350. THE CONTACT STATED THAT THE VEHICLE ACCELERATES WITHOUT WARNING. SHE STATED THAT THE ENGINE MADE A SQUEALING NOISE WHEN SHE PRESSED THE PUSH TO START BUTTON. SHE DEPRESSED THE BRAKE PEDAL, PLACED THE VEHICLE INTO REVERSE, AND THE VEHICLE SPED UP AND WOULD NOT STOP. SHE DEPRESSED THE BRAKE PEDAL WITH ALL OF HER STRENGTH, BUT THE VEHICLE WOULD NOT STOP. IT FINALLY CAME TO A STOP WHEN IT STRUCK THE SIDE OF A GARAGE. THE CONTACT WAS BRUISED AND STARTLED. A POLICE REPORT WAS FILED. THE SPEED WAS UNKNOWN. THE FAILURE MILEAGE WAS 39,000.
10282215	LEXUS	ES350	2007	Y	20090827	0	0	VEHICLE SPEED CONTROL	LAKE OSWEGO	OR	JTHBJ46G072	1	OUR 2007 LEXUS ES 350 ABRUPTLY AND WILDLY ACCELERATED WHILE MY WIFE WAS DRIVING ON THE FREEWAY. SHE STOOD ON THE BRAKES AND DEPRESSED THE PARKING BRAKE WHILE MOVING INTO THE SLOW LANE AND TOOK THE NEXT EXIT RAMP. THE CAR FINALLY SLOWED SOMEWHAT BEFORE REAR ENDING A STOPPED CAR. FORTUNATELY, NO ONE WAS HURT. THE CAR WAS TOWED TO THE LEXUS DEALER. THEIR DIAGNOSTIC COMPUTER SYSTEM DID NOT "CALL OUT" ANY PROBLEMS. THEY IMMEDIATELY BLAMED THE FLOOR MATS. HOWEVER, THE FLOOR MATS WERE TWO INCHES AWAY FROM THE GAS PEDAL. THEY THEN TRIED TO BRUSH ME OFF BY ASKING ME WHERE I WANTED THE CAR TOWED TO GET BODY WORK PERFORMED. I REFUSED AND ESCALATED TO LEXUS USA. THEY ARE NOW TRYING TO DETERMINE IF THEY CAN FIND A PROBLEM. THIS REMINDS ME OF THE AUDI ACCELERATION PROBLEM AND WARRANTS AN COMPLETE AND FULL INVESTIGATION. THE INTERNET IS FULL OF UNINTENTIONAL ACCELERATION PROBLEMS WITH THE 2007 LEXUS ES 350. I KEEP THINKING THAT THE 2007 MODEL IS THE FIRST OF THE NEW ES BODY STYLES AND THERE IS SOMETHING TERRIBLY WRONG. *TR

10290866	LEXUS	ES350	2008	N	20091001	0	0	VEHICLE SPEED CONTROL	PICKERINGTON	OH	JTHBJ46G282	1	ON OCTOBER 1, 2009 MY 2008 LEXUS ES 350 EXPERIENCED UNCONTROLLED ACCELERATION. UPON ENTERING THE HIGHWAY THE VEHICLE INCREASED IN SPEED TO APPROX. 90 MPH WITHOUT DEPRESSING THE ACCELERATOR. THE VEHICLE DID NOT STOP OR SLOW DOWN EVEN AFTER STEPPING FORCEFULLY ON THE BRAKES. I PUSHED THE START/STOP BUTTON ON THE DASHBOARD NUMEROUS TIMES AND THE CAR WOULD NOT STOP OR CUT OFF. SOMEHOW, THROUGH THE GRACE OF GOD I BEGIN SHIFTING THE GEARS, ONCE THE GEAR WAS PLACED IN NEUTRAL THE SPEED FINALLY BROKE AND THE CAR SLOWED DOWN. THE VEHICLE WAS STEERED TO THE SIDE OF THE ROAD WHERE THE CAR HAD DIFFICULTY COMING TO A COMPLETE STOP. ONCE THE CAR ACTUALLY STOPPED I CALLED THE LEXUS DEALERSHIP AND A FLATBED WAS SENT AND THE CAR WAS TOWED TO THE DEALERSHIP FOR SERVICE. THE LEXUS SERVICE DEPARTMENT DETERMINED THE DAMAGE CONSISTED OF BURNT FRONT PADS AND ROTORS AND BURNT REAR PADS AND ROTORS THAT ALL OCCURRED WHILE TRYING TO STOP THE RUNAWAY VEHICLE. *TR
10289153	LEXUS	ES350	2007	N	20091005	0	0	VEHICLE SPEED CONTROL	HILLSBOROBEACH	FL	JTHBJ46G382		TL*THE CONTACT OWNS A 2007 ES350 LEXUS. WHILE DRIVING 60 MPH ALL OF A SUDDEN THE VEHICLE ACCELERATED WITHOUT TOUCHING THE ACCELERATOR PEDAL. HE APPLIED THE BRAKES; HOWEVER, THE VEHICLE WOULD NOT STOP. HE WAS FORCED TO SHIFT GEARS INTO NEUTRAL TO STOP THE VEHICLE; ALTHOUGH, THE VEHICLE STOPPED THE ENGINE WAS STILL REVVING. THE CONTACT HAD TO ENGAGE THE ACCELERATOR PEDAL A COUPLE OF TIMES SINCE IT WAS STUCK IN PLACE. THE DEALER COULD NOT DUPLICATE THE FAILURE. WITHIN THE LAST THREE TO FOUR WEEKS THE FAILURE HAS HAPPENS 3 TO 4 TIMES AND HAS BECOME PROGRESSIVELY WORSE. THE DEALER WILL MAKE ANOTHER ATTEMPT TO DIAGNOSE THE FAILURE AND THE MANUFACTURER WAS NOTIFIED OF THE ACCELERATION PROBLEM. THE FAILURE AND CURRENT MILEAGE WAS 6000.

APPENDIX D:
Consumer Complaints to NHTSA, 2007-2008 MY Lexus ES350 Unintended Acceleration Incidents Occurring Jan. 2009-Jan. 2010

10289953	LEXUS	ES350	2007	N	20091027	0	0	VEHICLE SPEED CONTROL	ROUND ROCK	TX	JTHBJ46GX72		TL* THE CONTACT OWNS A 2007 LEXUS ES350. THE FLOOR-MATS SHIFTED UNDER THE ACCELERATED PEDAL; WHICH CAUSED THE VEHICLE TO ACCELERATE FROM 45 TO 55 MPH. THE DEALER WAS NOTIFIED, AND A TECHNICIAN STATED THAT IF THEY COULD DUPLICATE THE FAILURE, THEY COULD NOT PROVIDE A REMEDY. THE FAILURE MILEAGE WAS 45,000 .
10290983	LEXUS	ES350	2007	N	20091028	0	0	VEHICLE SPEED CONTROL	WESTLAKE VILLAGE	CA		1	FAULTY ACCELERATOR ON 2007 ES 350. VEHICLE SPED UP WITH FOOT OFF THE ACCELERATOR. ONLY ONE OCCURRENCE. WAS ABLE TO USE BREAK TO SLOW DOWN VEHICLE. ACCELERATOR FINALLY STOPPED. IMMEDIATELY CHECKED FLOOR MATS WHICH WERE SECURED AND HOOKED. *TR
10291614	LEXUS	ES350	2008	N	20091109	0	0	VEHICLE SPEED CONTROL	HARDEEVILLE	SC			TL* THE CONTACT OWNS A 2008 LEXUS ES 350. WHILE DRIVING APPROXIMATELY 55 MPH THE VEHICLE BEGAN TO ACCELERATE WITHOUT INTENTION. AFTER REPEATED BRAKE APPLICATION, THE VEHICLE STARTED TO DECELERATE. THE VEHICLE WAS IN THE PROCESS OF BEING TAKEN TO AN AUTHORIZED DEALER FOR DIAGNOSTIC TESTING. THE FAILURE AND CURRENT MILEAGES WERE 19,000. THE VEHICLE IDENTIFICATION NUMBER WAS UNAVAILABLE.
10295518	LEXUS	ES350	2008	Y	20091209	0	0	VEHICLE SPEED CONTROL	PITTSBURGH	PA	JTHBJ46GX82	1	2008 LEXUS 350 UNEXPECTED ACCELERATION. MOVING SLOW IN PARKING LOT PULLING INTO PARKING SPACE. LIGHT PRESSURE ON BRAKE. ENGINE WENT TO HIGH RPM CAR ACCELERATED PUSHED HARD ON BRAKE, PUT IN NEUTRAL. ENGINE WENT BACK TO IDLE. MY BUMPER HIT UNOCCUPIED PARKED CAR IN FRONT OF ME. DEALER DENIES ANYTHING WRONG. *TR

APPENDIX E:
Consumer Complaints to NHTSA of Unintended Acceleration in Lexus IS Models

ODI Number	Make	Model	Vehicle Year	Crash	Date of Incident	Injury	Deaths	Component	Complainant's City	Complainant's State	VIN	Miles	Incident Description/Injuries
8015367	LEXUS	IS300	2001	N	20000930	0	0	VEHICLE SPEED CONTROL	HUNTING TON STATION	NY	JTHB D182 110		WHILE DRIVING VEHICLE WOULD HESITATE WHEN ACCELERATING. VEHICLE BEEN TO DEALER ON THREE OCCASIONS, AND PROBLEM REOCCURRED. FEEL FREE TO PROVIDE ANY FURTHER INFORMATION.*AK
10060036	LEXUS	IS300	2001	Y	20040227	0	0	VEHICLE SPEED CONTROL :ACCELER ATOR PEDAL	DARIEN	IL	JTHB D182 110	29200	ON THREE SEPARATE OCCASIONS WITHIN PRIOR THREE MONTHS OF INCIDENT DATE, WHEN TAPPING ACCELERATOR TO THE FLOOR BRIEFLY (FRACTION OF A SECOND) AND THEN RELEASING, CARS THROTTLE REMAINED COMPLETELY OPEN (MAXIMUM RPMS) EVEN WITH FOOT OFF OF THE ACCELERATOR PEDAL. CARS THROTTLE SYSTEM EQUIPPED WITH "DRIVE BY WIRE" OR A WIRELESS COMPUTER CONTROLLED THROTTLE. ON PRIOR TWO OCCASIONS, VEHICLE'S IGNITION HAD TO BE SHUT OFF BY REMOVING KEYS FROM IGNITION WHILE DRIVING IN THE MIDDLE OF THE STREET. ON THIRD OCCASION, DUE TO TRYING TO AVOID OBSTACLES DRIVER HAD NO TIME TO SHUT CAR OFF. CAR STRUCK ROCKS AND VEERED OFF INTO LAKE. CAR TOTALED. *JB
10065012	LEXUS	IS300	2002	N		0	0	VEHICLE SPEED CONTROL :ACCELER ATOR PEDAL	SKOKIE	IL	JTHB D192 020	23000	INTERMITTENTLY WHEN ACCELERATOR PEDAL IS DEPRESSED IT STICKS. WHEN THIS OCCURS VEHICLE ACCELERATES AT A HIGH SPEED. THE BRAKE PEDAL FAILS TO STOP THE ACCELERATION. IGNITION HAS TO BE TURNED OFF TO STOP THE ACCELERATION. VEHICLE HAD BEEN SERVICED SEVERAL TIMES BY THE DEALERSHIP, BUT WAS NOT ABLE TO RESOLVE THE PROBLEM. *AK

10119774	LEXUS	IS300	2001	N	20050301	0	0	VEHICLE SPEED CONTROL :ACCELERATOR PEDAL	HUNTINGTON STATION	NY	JTHBD182310	65000	SINCE I HAVE OWNED THE VEHICLE, I HAVE HAD TWO INCIDENTS, WHICH BOTH OCCURED RANDOMLY WITH NO PRIOR ENGINE PROBLEMS OR INDICATIONS OF ISSUES WITH THE CAR, IN WHICH AS I WAS ACCELERATING, THE GAS PEDAL WOULD CONTINUE TO PRESS DOWN AND PIN ITSELF TO THE FLOOR. BOTH TIMES, THE GAS PEDAL WAS LITERALLY STUCK TO THE FLOOR AND NOT ABLE TO BE LOOSENED. THE FIRST TIME IT OCCURED, I PULLED THE EMERGENCY BRAKE AND JAMMED ON MY BRAKE PEDAL UNTIL THE GAS PEDAL POPPED BACK UP AFTER ABOUT A MINUTE PINNED TO THE GROUND. THE SECOND TIME, I LUCKILY HAD SOMEONE WITH ME WHO INSTRUCTED ME TO PUT THE CAR IN NEUTRAL AND QUICKLY TURN OFF THE ENGINE ONE CLICK SO THAT I COULD BRAKE AND STEER MYSELF TO SAFETY. THANK GOD NO ONE WAS INJURED IN THESE INCIDENTS, BUT BOTH OCCURENCES COULD HAVE BEEN HORRIBLE ACCIDENTS. THE CAR IS A 2001 LEXUS IS 300. MILEAGE AT TIME OF INCIDENTS: 1ST INCIDENT-ABOUT 65-70,000 MILES 2ND INCIDENT-ABOUT 80-85,000 MILES. BOTH INCIDENTS OCCURED WITHIN ABOUT 2-4 MONTHS OF EACH OTHER AND THE LAST INCIDENT FROM TODAY WOULD HAVE OCCURED ABOUT 1 1/2-3 MONTHS AGO. I HAVE ONLY OWNED

10139528	LEXUS	IS300	2002	Y	20051007	0	0	VEHICLE SPEED CONTROL	RICHMOND	00	JTHBD192X20	35420	MY 2002, LEXUS IS300 HAD A CASE OF SUDDEN UNINTENDED ACCELERATION THAT LED TO A CRASH CAUSING OVER $10,000 WORTH OF DAMAGES TO BOTH MY CAR AND THE OTHER PERSONS CAR. I HAVE SEEN OTHER REPORTS OF OTHER PEOPLE WONDERING IF THE ELECTRONIC THROTTLE IS SUSPECT IN THESE CASES, HOWEVER I PERSONALLY BELIEVE THAT THE REAL PROBLEM IS ONLY PARTLY TO BLAME ON THE ELECTRONIC THROTTLE. IN MY OPINION, THE PROBLEM IS THE LIKELIHOOD OF THE PEDAL GETTING STUCK UNDER FLOOR MATS IS TOO HIGH, COMBINED WITH THE RELATIVELY "LIGHT" SPRING FORCE ON THE GAS PEDAL BECAUSE IT IS A THROTTLE-BY-WIRE SYSTEM WHICH LEADS TO THE FLOOR MAT EASILY HOLDING THE PEDAL DOWN TO FULL THROTTLE CAUSING AN ACCIDENT. I SAY THAT THIS IS "NEGLIGENT PEDAL DESIGN ON THE PART OF THE CAR MANUFACTURER". I ALSO BELIEVE THAT THEY KNEW THIS WAS AN ISSUE BECAUSE THEY MAKE REFERENCE TO THIS IN THE OWNERS MANUAL ON: PG.76 WHERE THERE IS A CAUTION THAT STATES "MAKE SURE THE FLOOR MAT IS PROPERLY PLACED ON THE FLOOR CARPET. IF THE FLOOR MAT SLIPS AND INTERFERES WITH THE MOVEMENT OF THE PEDALS DURING DRIVING, IT MAY CAUSE IN ACCIDENT." N

APPENDIX E:
Consumer Complaints to NHTSA of Unintended Acceleration in Lexus IS Models

10167016	LEXUS	IS300	2002	N	20060828	0	0	VEHICLE SPEED CONTROL	QUINCY	CA	JTHBD192420	26000	ON 8/28/06, AT APPROXIMATELY 8:50 AM I WAS DRIVING TO WORK ON A TWO LANE, LEVEL, STRAIGHT PAVED COUNTY ROAD. I WAS DRIVING MY 2002 LEXUS IS 300 THAT HAD JUST REACHED 26,000 MILES. (THIS CAR HAS RECEIVED ALL REGULARLY SCHEDULED MAINTENANCE SERVICES FROM LEXUS OF RENO AND HAS NOT HAD ANY PROBLEMS WHATSOEVER. I AM THE ORIGINAL OWNER OF THIS VEHICLE) THE ROAD WAS CLEAR AND DRY. I WAS TRAVELING AT APPROXIMATELY 45 MPH WHEN I ACCELERATED TO PASS ANOTHER VEHICLE. AS I PASSED, MY CAR KEPT ON ACCELERATING EVEN AS I LET UP ON THE ACCELERATOR. I ATTEMPTED TO APPLY THE BRAKES. THE ENGINE ACCELERATION WAS SO POWERFUL, THE CAR DID NOT RESPOND WELL TO MY ATTEMPT TO BRAKE, SO I TOOK MY FOOT OFF THE BRAKE. THE SPEED ON THE DASHBOARD WAS 60 MPH AND ACCELERATING. I APPLIED THE BRAKES AGAIN WITH ALL THE STRENGTH I HAD AND WAS ABLE TO PULL THE CAR SAFELY OFF THE ROAD. THE ENGINE WAS RACING EVEN WHEN STOPPED. I MOVED THE SHIFT INTO PARK. EVEN IN PARK THE ENGINE WAS RACING. I TURNED THE ENGINE OFF. MY HUSBAND WAS FOLLOWING ME AND STOPPED. HE DROVE IT 1.5 MILES OUR OFFICE WITHOUT INCIDENT. I THEN
10169969	LEXUS	IS250	2006	Y	20060925	0	0	VEHICLE SPEED CONTROL :ACCELERATOR PEDAL	AGANA	GU	JTHBK262462	4800	ACCELERATOR PEDAL STUCK DOWN GOING AT A SPEED OF LESS THAN 5 MILES AN HOUR WHILE TURNING OUT OF A PARKING LOT. FOOT BRAKE AND EMERGENCY BRAKE WERE APPLIED BUT THE CAR WOULD NOT STOP WHICH RESULTED IN AN ACCIDENT. WHEN MY CAR HIT THE OTHER CAR, THE ACCELERATOR POPPED BACK UP. *JB

APPENDIX E:
Consumer Complaints to NHTSA of Unintended Acceleration in Lexus IS Models

10171756	LEXUS	IS250	2006	N	20061020	0	0	VEHICLE SPEED CONTROL	TOLEDO	OH	JTHCK262265	5310	WIFE WAS DRIVING ON THE INTERSTATE WITH THE CRUISE ON DOING ABOUT 65 MPH, AND SHE DECIDED TO PASS A TRUCK. SHE ACCELLERATED SLIGHTLY, AND THE CAR SUDDENLY "FLOORED" TO OVER 90 MPH AND THE RPM'S WENT ALL THE WAY UP. SHE TRUNED OFF THE CRUISE, BUT IT WOULDN'T SLOW DOWN. SHE TRIED TO BRAKE, BUT THE ENGINE WAS STILL REVING AT THE HIGHEST SPEED. SHE FORCED HERSELF OFF INTO THE GRASSY MEDIAN AND SAT ON THE BRAKE UNTIL SHE COULD JAM THE TRANSMISSION INTO PARK AND TURN OFF THE ENGINE. VEH TOWED TO LEXUS DEALER. TECH COULDN'T FIGURE OUT WHAT WAS CAUSING THIS, BUT AFTER TALKING TO LEXUS HEADQUARTERS, THEY FOUND THAT THE RUBBER CAR MAT AND THE BACK OF THE ACCELLERATOR SOMEHOW CONNECTED AND FORCED THE CAR TO BE "FLOORED". YOU COULD NOT TELL BY LOOKING AT THE MAT THAT IT WAS CONNECTED TO THE ACCELLERATOR. MY WIFE WOULD OF DIED IF THERE HAD BEEN ANOTHER VEHICLE CLOSE TO HER. NO ACCIDENT OR INJURY. I HAVE NO COMPLAINT WITH THE DEALER. THEY DID EVERYTHING THEY COULD TO HELP. *NM
10201175	LEXUS	IS250	2007	Y	20070814	1	0	VEHICLE SPEED CONTROL :ACCELERATOR PEDAL	GERMANTOWN	MD	JTHCK262075	3400	I WAS DRIVING MY LEXUS IS 250 AWD (2007) AT 30 MPH ON ROUTE 27 IN MONTGOMERY COUNTY ,MD AT 7 AM ON AUGUST 14, 2007. MY GAS PEDAL BECAME STUCK AND I CRASHED INTO A TREE. MY CAR IS TOTALED AND I SUSTAINED NECK AND BACK INJURIES. *JB THE CONSUMER LEARNED THERE WAS A RECALL REGARDING THE DEFECT. UPDATED 10/09/07. *JB

10244204	LEXUS	IS300	2004	N	20081001	0	0	VEHICLE SPEED CONTROL	MADISON	AL	JTHBD192740	58400	CAR FAILED TO STOP AT A RED LIGHT UNDER NORMAL BRAKING BECAUSE ENGINE FAILED TO DECELERATE WHEN PRESSURE WAS REMOVED FROM THE PEDAL. MAXIMUM FORCE WAS APPLIED TO THE BRAKE PEDAL. THE BRAKE ANTI LOCK FEATURE WAS ACTIVATED AND A COLLISION WITH THE STOPPED CAR AHEAD WAS BARELY AVERTED. WHEN STOPPED, THE ENGINE REVERTED TO NORMAL IDLE. THE PROBLEM DID NOT RECUR. EXAMINATION BY A MECHANIC AT THE DEALERS SHOP FAILED TO IDENTIFY A COMPUTER FAULT OR OTHER CAUSE. THE CAR WAS RETURNED WITHOUT REPAIR. I AM NOT SATISFIED THAT A STUCK THROTTLE IS NOT A REPAIRABLE OR ABNORMAL CONDITION. IT SEEMS TO ME BE HIGHLY DANGEROUS AND MERITS MORE THAN A "WELL, ITS WORKING NOW SO COME BACK WHEN IF IT HAPPENS AGAIN." SORT OF RESPONSE. *TR
10254688	LEXUS	IS250	2006	Y	20090110	0	0	VEHICLE SPEED CONTROL	AUSTIN	TX	JTHBK262862	31200	TL*THE CONTACT OWNS A 2006 LEXUS IS250. WHILE DRIVING 50 MPH, THE VEHICLE BEGAN ACCELERATING ON ITS OWN TO 80 MPH. THE VEHICLE FAILED TO COMPLETELY SLOW DOWN WHEN THE BRAKE PEDAL WAS DEPRESSED. THE CONTACT WAS ABLE TO KEEP THE SPEED AT APPROXIMATELY 50 MPH; HOWEVER, THE VEHICLE WAS CONTINUOUSLY ACCELERATING TO HIGHER SPEEDS. SHE WAS UNABLE TO SLOW THE VEHICLE DOWN AND CRASHED INTO A CURVE. THE CONTACT NOTICED THAT THE ROTORS WERE ORANGE AND THE REAR BRAKE PADS WERE MELTED INTO THE ROTORS. THE AXLE FAILED AND FRACTURED. THE CONTACT WAS NOT INJURED. A POLICE REPORT WAS FILED AND THE VEHICLE HAS NOT BEEN REPAIRED. THE MANUFACTURER STATED THAT THEY WOULD SEND A FIELD INSPECTOR TO INSPECT THE VEHICLE. THE FAILURE AND CURRENT MILEAGES WERE 31,200.

10278006	LEXUS	IS250	2007	N	20090705	0	0	VEHICLE SPEED CONTROL	NORTH JUDSON	IN	JTHC K262 472		2007 LEXUS IS250. TRAVELING AT 55 MPH ON HWY, HIT CRUISE, CAR SUDDENLY ACCELERATED TO NEARLY 105 MPH BY ITSELF. BRAKES UNRESPONSIVE. DID NOT RESPOND TO PUTTING IN NEUTRAL. HAD TO PLACE IN PARK. LEXUS BLAMES ON FLOORMAT INTERFERENCE. DRIVER DISAGREES. CRUISE WOULD NOT TURN OFF. 911 CALLED, ADVISED TO DRIVE INTO FIELD. 2ND TIME THIS HAPPENED SINCE PURCHASING CAR IN MAR 2009. ALTHOUGH CAR UNDER WARRANTY, LEXUS REFUSES TO PAY. INSURANCE ADJUSTER SENT TO DEALERSHIP TO INSPECT. WAITING ON RESULTS. *TR CONSUMER IS ADDING PHOTOS. 7/29/09 *NJ RECEIVED PHOTE. UPDATED 08/05/09.*JB
10282360	LEXUS	IS250	2008	Y	20090807	0	0	VEHICLE SPEED CONTROL	WALTHAM	MA	JTHC K262 985	12000	I WAS PULLING INTO A PARKING SPACE WITH MY FOOT ON THE BRAKE, ALMOST TO A COMPLETE STOP WHEN THE CAR SUDDENLY ACCELERATED & I WENT UP OVER A CURB & HIT A TRANSFORMER. THE DISTANCE WAS ONLY ABOUT 8 FEET. I DO NOT KNOW HOW FAST I WAS GOING PROBABLY ABOUT 15 - 30 MPH. I MOVED THE TRANSFORMER ABOUT 3 FEET. (THE TRANSFORMER WEIGHED ABOUT 1/2 - 1 TON)9I I DO NOT KNOW HOW THE CAR ACCELERATED. *TR
10285810	LEXUS	IS250	2006	Y	20090716	0	0	VEHICLE SPEED CONTROL :ACCELERATOR PEDAL	CANTON	OH	JTHC K262 X62	35000	TL*THE CONTACT OWNS A 2006 LEXUS IS 250. WHILE DRIVING 50 MPH THE ACCELERATOR PEDAL WAS STUCK UNDER THE FLOOR MAT. AS A CONSEQUENCE, HE HAD TO SHIFT THE VEHICLE INTO PARK TO DECELERATE WHICH CAUSED A TRUCK TO CRASH INTO THE REAR OF THE VEHICLE. THE VEHICLE WAS EXTENSIVELY DAMAGED. THERE WERE NO INJURIES. AN AUTHORIZED TECHNICIAN STATED THAT THE FAILURE WAS NOT CAUSED BY A DEFECT. THE VEHICLE IDENTIFICATION NUMBER WAS UNAVAILABLE. THE FAILURE AND CURRENT MILEAGES WERE 35000. UPDATED 10/13/09. *LJ UPDATED 10/14/09

APPENDIX E:
Consumer Complaints to NHTSA of Unintended Acceleration in Lexus IS Models

10284798	LEXUS	IS250	2007	N	20090807	0	0	VEHICLE SPEED CONTROL	TORRANCE	CA	JTHBK262872	26000	WIFE'S 2007 LEXUS IS 250 EXPERIENCED SUDDEN ACCELERATION ON THE NORTHBOUND 405 FREEWAY IN LONG BEACH CALIFORNIA. AFTER SHE ACCELERATED ONTO THE FREEWAY SHE ENTERED THE FAST LANE AND EASED UP ON THE GAS PEDAL BUT THE CAR CONTINUED TO ACCELERATE OUT OF CONTROL WITH HER FOOT COMPLETELY OFF THE GAS PEDAL. SHE BEGAN PRESSING ON THE BRAKE PEDAL IN AN EFFORT TO STOP THE VEHICLE, ALL THE WHILE THE CAR WAS TRYING TO ACCELERATE. LUCKILY SHE WAS ABLE TO MAINTAIN CONTROL AND MOVED OVER TO THE RIGHT LANE, THEN ONTO THE SHOULDER OF THE HIGHWAY. SHE THREW THE AUTO TRANSMISSION LEVER INTO NEUTRAL. SHE WAS THEN ABLE TO BRING THE CAR TO A STOP, EVEN WHILE THE ENGINE WAS RACING AT HIGH RPM. SHE TURNED OFF THE IGNITION AND THE ENGINE STOPPED. WE HAD THE CAR FLAT-BEDDED TO SOUTH BAY LEXUS IN TORRANCE, CALIFORNIA WHERE THEY GAVE HER A LOANER FOR THE WEEKEND AND PROMISED TO HAVE ONE OF THEIR MECHANICS DRIVE THE CAR OVER THE WEEKEND TO SEE IF THEY COULD ┐REPEAT┐ THE PROBLEM. ON MONDAY THEY CALLED ME AND TOLD ME THAT THEY COULD NOT FIND ANYTHING WRONG WITH IT, TELLING ME THAT MORE
10286330	LEXUS	IS250	2007	N	20090830	0	0	VEHICLE SPEED CONTROL	LAUREL	MD	JTHCK262472	34500	I WAS NORMALLY DRIVING ON THE ROAD AND ON GOOD WEATHER CONDITIONS. MY CAR ACCELERATOR PEDAL GOT STUCK. THE CAR ACCELERATED VERY FAST AND WAS RAPIDLY APPROACHING A RED LIGHT. I QUICKLY REACTED AND WAS ABLE TO PULL BACK THE ACCELERATOR WITH MY SHOES AND HAND. *TR
10285143	LEXUS	IS250	2007	N	20090921	0	0	VEHICLE SPEED CONTROL	MILLERS CREEK	NC	JTHCK262X75	14940	CAR SUDDENLY BEGAN ACCELERATING BY ITSELF, WOULD NOT SLOW DOWN, BRAKES WOULD NOT WORK, TACH RED-LINED, REACHED SPEED OF 110 MPH. PUSHED KILL SWITCH FOR 3 SECONDS TO CUT CAR OFF. *TR

10291091	LEXUS	IS250	2008	Y	20091031	0	0	VEHICLE SPEED CONTROL	FREEHOLD	NJ	JTHCK262085	9800	I WAS DRIVING MY WIFE'S LEXUS 2008 IS 250 OUT OF A PARKING LOT WHEN APPLYING MY FOOT ON THE BRAKE THE CAR ACCELERATED. I NOW SLAMMED MY FOOT ON THE BRAKES AND THE CAR CONTINUED TO ACCELERATE. THE ONLY THING THAT STOPPED MY CAR WAS THE CAR IN FRONT OF IT WITH VERY LITTLE DAMAGE. IF THE CAR WAS NOT IN FRONT OF ME I WAS ACCELERATING FASTER INTO ON COMING TRAFFIC. MY FLOOR MAT IS NOT ON THE FLOOR AS AFTER THE SAN DIEGO INCIDENT THAT WAS TOYOTA'S REASONING. WE WERE TOLD ROUGHLY A MONTH AND HALF AGO TO TAKE THE MAT OUT, WHICH I DID RIGHT AWAY. THEY CAN DENY IT ALL THEY WANT THIS CAR WAS ACCELERATING AND GETTING FASTER WHEN APPLYING THE BRAKE. THE POLICEMAN AT THE SCENE INSTRUCTED US TO NOT DRIVE THIS VEHICLE AND TO GET A LOANER WHICH WE DID. THE CAR WAS PICKED UP AND SENT TO LEXUS IN FREEHOLD. FIRST WE WERE TOLD NOTHING IS WRONG AND THEY TEST DROVE IT AND SUCH. THEY WERE KEEPING IT FOR 3 DAYS NOW THEY ARE TELLING US THEY ARE KEEPING IT FOR 3 WEEKS. THERE ARE REPORTS ALL OVER THE WEB ON THIS WITH OVER 2000 COMPLAINTS. IT IS OBVIOUS THERE IS A MAJOR DEFECT IN THEIR COMPUTER SYSTEM. THEY REALLY N
10292577	LEXUS	IS250	2006	Y	20090922	0	0	VEHICLE SPEED CONTROL	NEWBURY PARK	CA	JTHBK262365	70000	TL*THE CONTACT OWNS A 2006 LEXUS IS250. WHILE THE CONTACT WAS APPROACHING A STOP SIGN WITH HIS FOOT ON THE BRAKE PEDAL, THE VEHICLE SUDDENLY ACCELERATED FORWARD WHICH CAUSED THE CONTACT TO REAR ENDED THE VEHICLE IN FRONT OF HIM. THE VEHICLE WAS TAKEN TO THE DEALER WHO INFORMED HIM TO REMOVE THE MATS FROM THE VEHICLE. THERE WERE NO PRIOR WARNINGS. THE CURRENT AND FAILURE MILEAGES WERE 70000.

10292715	LEXUS	IS	2009	N	20090910	0	0	VEHICLE SPEED CONTROL	WOODLAND HILLS	CA	JTHBK262195	900	FOUR INCIDENTS OF UNINTENDED ACCELERATION. ON FOUR OCCASIONS THE 2000 LEXUS IS250 I PURCHASED ON SEPTEMBER 3, 2009 HAD UNINTENDED ACCELERATION OF UP TO 5000 RPM.. THREE TIMES THIS OCCURRED WHEN STARTING THE CAR IN PARK; THE FOURTH TIME WAS WHEN THE CAR WAS STOPPED AND IDLING. TWICE I HAD THE DEALER, THOUSAND OAKS, CA LEXUS, EXAMINE THE PROBLEM AND WAS TOLD NO DEFECT COULD BE FOUND. ON THE FOURTH OCCURRENCE I NOTICED MY FOOT WAS ON THE EDGE OF THE BRAKE PEDAL AND DEPRESSING THE ACCELERATOR SIMULTANEOUSLY. I WEAR ONLY A SIZE 9 SHOE, HAVE BEEN A LICENSED DRIVER FOR OVER 65 YEARS AND HAVE NEVER HAD ANY EXPERIENCES SUCH AS THESE. I HAVE CONCLUDED THAT EITHER THE BRAKE AND ACCELERATOR PEDALS ARE TOO CLOSE TO EACH OTHER OR THEY HAVE BEEN POSITIONED TOO FAR TO THE LEFT, THAT IS, TOO CLOSE TO THE STEERING COLUMN CAUSING ONE'S FOOT TO BE ON THE EDGE OF THE BRAKE PEDAL. SINCE UNINTENDED ACCELERATION HAS BEEN REVEALED AS A PROBLEM WITH THE LEXUS, I SHALL APPRECIATED YOUR RESPONSE TO THE PROBLEM I HAVE DESCRIBED.*TR THANK YOU.
10292738	LEXUS	IS 300	2003	N	20090317			VEHICLE SPEED CONTROL	REDONDO BEACH	CA	JTHBD192130	18000	WAS SLOWLY PULLING INTO PARKING SPACE WHEN CAR SUDDENLY ACCELERATED FULL THROTTLE. CAR WAS CARRIED OVER PARKING BUMPER INTO BUSHES BEYOND, WITH DAMAGES TO BODY AND UNDERCARRIAGE OVER SIX THOUSAND DOLLARS. *TR

PREPARED FOR SAFETY RESEARCH & STRATEGIES, INC.

Toyota Electronic Throttle Control Investigation

Preliminary Report

David W. Gilbert, Ph.D.
Omar Trinidad
2/21/2010

This preliminary research study report outlines the procedures and partial data collected from the investigation of the circuit malfunction detection capabilities of four Toyota Electronic Throttle Controlled vehicles.

Introduction

Historically, vehicle engine speed was mechanically controlled by use of a linkage or cable to the throttle valve assembly. The introduction of computerized engine controls has given vehicle engineers the added capability to electrically control fuel delivery, ignition, and most recently the throttle valve. By providing electrical throttle control through the means of an on-board vehicle computer, or Electronic Control Module (ECM), a number of engineering advantages were realized. Vehicle manufacturers were able to increase vehicle stability, achieve better fuel economy, reduce emissions, and eliminate components such as cruise control. One of the downside trade-offs for these beneficial performance advantages, was increased electrical and electronic complexity. Vehicle manufacturers clearly recognized the important requirement for ETC systems to perform exactly as they intended. A failure of the electrical circuits, sensors, wiring, or actuators could potentially result in a runaway engine. Electronic Throttle Control (ETC) systems needed the added redundancy of certain sensors and electrical circuits to ensure safe and reliable operation. In addition, the ECM's were programmed to detect operational abnormalities or defects in ETC components and their related electrical circuits. The intent was to build an ETC system that would always "fail-safe" in the event of potential problem.

Vehicle engineers also needed to build in driver warning capability for ETC systems. In the event that a vital ETC component or electrical circuit defect has been detected, the Malfunction Indicator Lamp (MIL) is illuminated to inform the vehicle operator of a problem. At the same time, to aid in vehicle diagnostics and repair, a Diagnostic Trouble Code (DTC) will have been recorded in the ECM memory. Each possible DTC has an identifying alpha-numeric code to aid vehicle repair of computer associated components. The recorded DTC, along with a "freeze-frame" of captured vehicle data, could be retrieved later by technicians using a diagnostic scan tool. Depending on the seriousness of the ETC malfunction, the ECM will typically have been preprogrammed to operate the engine with limited RPM or substantially reduced power. In the event that mechanical components in the throttle body were to fail, the ECM has

the added fail-safe capability to cut-off fuel delivery to limit engine speed. In the most serious cases of component failure, the ECM's fail-safe strategy could have the engine speed reduced to idle. This reduced power mode of operation would remain in the vehicle until proper repairs are made. All of these ETC fail-safe strategies were logically put in place to keep the vehicle safe and driver controllable at all times. However, for fail-safe vehicle operation, the ECM must have the programmed ability to detect a number of potential ETC malfunctions.

The ECM, in addition to operating the engine for optimum performance and emissions, is constantly monitoring sensors and circuits for incorrect or illogical values. Current production vehicles are required to meet standards for the second generation of On-Board Diagnostics (OBD II). An OBD II vehicle runs self-tests or monitors of the ECM circuitry that are typically classified as one or two trip faults. If a sensor or output circuit was to exceed the ECM's programmed threshold values, the computer should set a DTC. However, depending on the component being monitored, a MIL may not illuminate until the ECM sees the component fail a second time. Two trip fault detection logic is used for less definitive and less serious failures that are not easily distinguished as a problem area. One trip fault detection logic is used for more serious or readily identifiable problems. One trip fault monitors will set a DTC and turn on the MIL after only one instance of detection. Typically, one trip faults include electrical component, electrical circuit malfunctions, detected values that could cause engine damage, or potential safety concerns. Properly operating ETC system circuits and components are vital to safe vehicle operation. All DTC's for Toyota's ETC systems are identified in the service literature as "1 trip detection logic" with ECM code setting ability within seconds of circuit fault detection.

Purpose of the Study

The purpose of this research study was to contribute to a better understanding of electronic throttle control system malfunctions and the fail-safe detection capabilities of selected vehicles equipped with electronic throttle controls. More specifically, this research primarily examined the fail-safe detection capabilities of electrical circuitry designed to prevent sudden or unintended acceleration of electronic throttle controlled vehicles manufactured by Toyota Motor Co. The Accelerator Pedal Position (APP) sensor was identified in the review of manufacturers' service literature as a significantly important ETC input for all vehicles used in the study. Since vehicle driver demands are electrically conveyed through this high priority sensor, basic testing was focused on the APP sensor, voltages, and associated wiring circuits. A secondary purpose was to identify areas of further research of ETC fail-safe detection capabilities of Toyota Motor Co. vehicles and other manufactured brands of vehicles. This limited analysis attempted to identify and characterize potential safety concerns of Toyota Motor Co. vehicles, as well as other vehicle manufacturers using electronic throttle control systems.

Statement of the Problem

What are the malfunction detection and fail-safe capabilities of Toyota vehicles equipped with electronic throttle control systems?

Research Questions

This research study attempts to answer the following questions:

1. Are the malfunction detection strategies of Toyota Electronic Throttle Control systems sufficient to identify fundamental APP sensor and/or circuit malfunctions?

2. Does the possibility exist for Toyota Electronic Throttle Control systems to operate with undetected APP sensor and/or circuit malfunctions?

Electronic Throttle Control Logic

Toyota's TIS service literature served as an obvious first means to understand the complex electrical and mechanical aspects of the ETC system. Claims of vehicle problems without stored DTC's in the ECM, suggested that a possible fail-safe detection condition may have been overlooked in the diagnostics. A thorough review of the available TIS service information for ECT system operation and diagnostics was conducted.

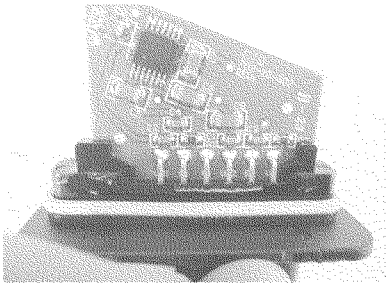

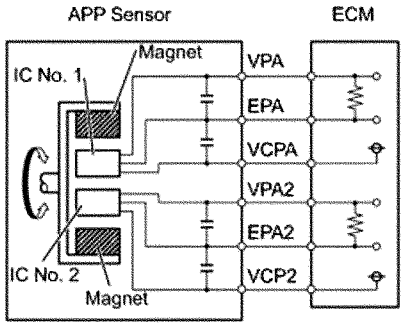

APP Sensor Circuit

Of particular interest were the APP signal inputs to the ECM. According to the Toyota TIS service information, the APP sensor is a non-contact type that uses two independent Hall-effect elements. As described, the APP sensor will have two completely separate sensing circuits: Voltage Pedal Accelerator (VPA), and Voltage Pedal Accelerator 2 (VPA2). Each sensing circuit will have a separate voltage supply circuit (Voltage Constant Pedal, or VCP), a separate ground circuit (Earth Pedal Angle, or EPA), and separate signal circuits (VPA and VPA2). The ETC system description further defines the two signal circuits as VPA (main) and VPA2 (sub). As TIS describes the circuit, the signal from VPA (main) "indicates the actual accelerator pedal opening

angle and is used for engine control" (Appendix: TIS Service Document, p. 1). Voltage limits for VPA, range from 0.4 to 4.8 Volts or more. The signal from VPA2 (sub) "conveys the status of the circuit and is used to check the APP sensor itself" (Appendix: TIS Service Document, p. 1). Voltage limits for VPA2, range from 1.2 to 4.8 Volts or more. Of important note, are the *overlapping* voltage values of the two APP signal inputs to the ECM.

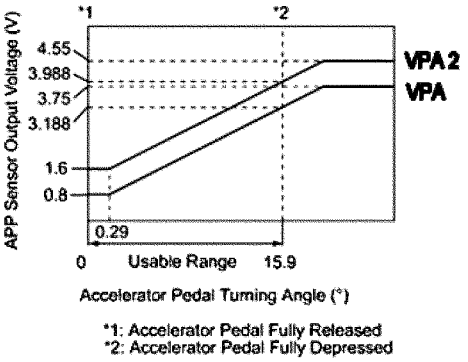

Normal Toyota APP

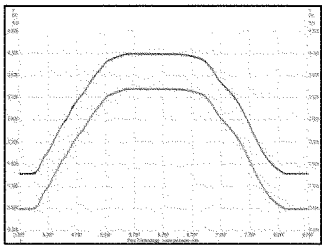

Potential Loss of APP Sensor Redundancy

Because their important role to accurately convey vehicle driver demands for throttle opening, APP sensor voltage inputs should always be confirmable by the ECM as absolutely correct. It was noted in the service literature that the threshold limits for a voltage difference of "0.02 Volts or less" between the two APP signal circuits should set a DTC P2138 (Appendix: TIS Document, p. 3). This voltage appeared to be an unusually close threshold value for a short between circuits. In other words, these two signal voltages could have been *almost* identical, and remain safely within the parameters of the P2138 DTC threshold limits. The VPA and VPA2 normally operate through a common range of parallel planes of voltage values. In addition, the two signal voltage values are normally supposed to rise and fall in unison with each other. If the two signal voltages

were in some fashion to become interconnected (shorted) through a certain amount of circuit resistance, the lower VPA voltage could be pulled up slightly in value. The higher VPA2 voltage could be be affected in the opposite manner and pulled down slightly in value. At the same time, both sensors could conceivably stay within the upper voltage boundary of 4.8 Volts or more for the P2123 and P2128 DTC criteria. Similarly, the VPA2 1.2 Volt low threshold limit value for a P2127 DTC would not be reached, and the VPA 0.4 Volt low threshold limit value for a P2122 DTC would not be reached. Signal interconnection through resistance could then potentially tie the two circuits together without setting a DTC. At that point, APP signal circuit redundancy is lost and neither signal circuit is verifiable by the ECM as defective. The ECM will only react to defective voltages outside of the range of programmed limitations-so if the circuit is not defective; it must be good. Without a DTC set, the ECM will not logically enter into a fail-safe mode of operation.

Vehicle Testing Methodology

The Automotive Technology Department at Southern Illinois University Carbondale (SIUC) has a long history of teaching the technical aspects of vehicles. Working closely with the automotive industry, SIUC has the privileged position of receiving a considerable number of manufacturer donated vehicles for educational and research purposes only. The vehicles used in this research study were purposely selected from the SIUC fleet because of the experimental nature of the testing methodology. As a standard safety and liability requirement of manufacturer vehicle donations, all vehicles used for educational training cannot be licensed, titled, or driven on a public roadway. In addition, when the useful life of the vehicle is exhausted they are destroyed. The SIUC fleet vehicles were clearly a most valuable asset to ensure the safety and control limitations of this unique study.

Test vehicles selected for use in this study were required to meet certain predetermined technical and mechanical requirements. Since ETC was the major emphasis of this investigation, all SIUC vehicles *not* equipped with electronic throttles

were logically excluded. Fortunately, the SIUC fleet had four Toyota manufactured ETC vehicles that could be included for testing. Since engine displacement and number of cylinders is not a determining factor in basic ETC operation, vehicles with different engine sizes and configurations were included. Prior to ETC testing procedures, all vehicles used in the study were checked for proper engine performance, electrical system operation, and absence of existing DTC's. Vehicle problems or servicing needs were repaired as necessary before initiating ETC testing procedures.

For each of the test vehicles, ETC specific technical service information was well researched. Collected service information included (but was not limited to) basic ETC operational characteristics, wiring diagrams, electrical connector pin designations, component descriptions, DTC repair procedures, and fail-safe mode criteria. The primary information source for Toyota vehicles was the Technical Information System (TIS), which provides service support for all Toyota produced vehicles in the United States. To ensure technical accuracy before and during testing procedures, hard copies of vehicle service information were printed for laboratory use as needed.

Instruments and test equipment used in this study were typical of those used by automotive service professionals. Tools utilized for circuit testing and evaluation included; Fluke 88 digital multi-meters, Pico Automotive Oscilloscopes, IET decade resistance substituters (variable resistance boxes), connector back-probing devices, and common jumper wires. The high impedance Fluke 88 digital multi-meter was used for testing circuit resistance, grounded circuits, short circuits to power, and shorts between circuits. For purposes of observing and evaluating ETC operational characteristics, a laptop computer based Pico four channel Automotive Oscilloscope was utilized to display and capture waveforms. Simple varying resistance boxes were used to simulate poor circuit connections, short circuits, and mimic defective sensor inputs. Generic OBD II and manufacturer specific scan tools were used to identify the types of DTC's and view the ECM data values for sensor inputs and actuator outputs. Because of availability and versatility to work with many different makes and models of vehicles, the Actron AutoScanner Plus scan tool was used extensively to read DTC's, erase DTC's, and view generic OBD II data during testing.

The first step in the research process was the validation of normal operation of the ETC system in each of the selected test vehicles. Establishment of a solid baseline of proper operation was imperative to evaluate changes in the ETC systems due to the direct effects of testing. As a preconditioning requirement to prevent high idle from cold start-up, each engine was started and allowed to reach normal operating temperature before initiating testing methods. General overall engine performance and condition was noted. Scan tools were used to verify the proper operation of the vehicle's MIL and the ECM's capability to detect and record DTCs. Normal scan tool information, scope patterns, and voltage parameters were observed and recorded for all test vehicles used in the study. In addition, general notations were made of the engine speed and response rate with accelerator pedal depression. Engine response was observed during both: accelerator pedal depression with brake pedal released, and accelerator pedal depression with the brake pedal depressed.

Using the vehicle service information as a guide, APP connectors were initially back-probed to tap into the supply, signal, and ground circuits of the sensor. Voltmeter readings were used to verify the circuit integrity of the test connections. Once a solid connection to the circuit was verified, the oscilloscope was connected to visually monitor voltage changes in the APP circuits. Starting from this point, potential types of circuit abnormalities and experimental combinations were examined. Following the fail-safe monitor strategies and the typical malfunction thresholds from the Toyota TIS service literature, DTC detection conditions were painstakingly examined and tested for validity (Appendix: TIS Document).

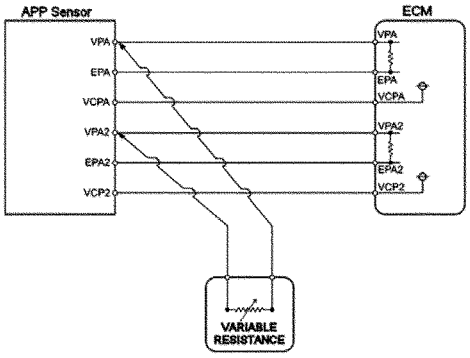

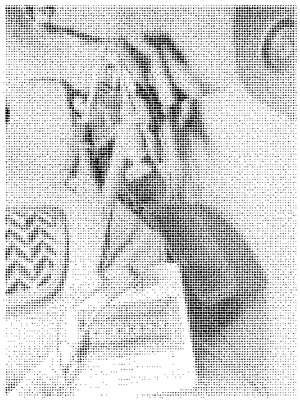

Validation testing began with DTC P2138, which is intended to detect abnormal conditions concerning the APP sensor, the ECM, and short circuits between VPA and VPA2 circuits. While monitoring APP signal voltages with the ignition "Key ON-Engine OFF" (KOEO), various resistances between the two APP signal circuits were introduced for trial. The effects of the different resistance values were recorded to determine the ECM's actual circuit detection capabilities for this type of circuit malfunction. Ample time duration of "2.0 seconds or more" was allowed, as listed in the service literature for one trip detection logic. MIL illumination was used to signal the presence of ECM fault detection and subsequent DTC storage. It was soon realized that certain short circuit resistances between VPA and VPA2 were undetectable by the ECM. Once initial fault limitations were roughly established, "Key ON-Engine Running"(KOER) trials were conducted with similar fault detection procedures. Of particular interest was vehicle engine operation within the ECM acceptable voltage zone of a compromised VPA to VPA2 circuit short. The test vehicles generally ran well, in spite of the simulated signal circuit malfunction.

While running the engine in a VPA to VPA2 short circuit state, without MIL illumination or stored DTCs, accelerator pedal response rate and range was noted. Accelerator pedal observations were made with simultaneous brake pedal application, and without simultaneous brake pedal application. Recorded data, observations, and results were listed in detail for each specific test vehicle. To further test the absence of fault detection, experimentation was done to determine if the ECM would set a DTC with a combination of additional circuit abnormalities. Two combination tests were performed to include VPA and VPA2 shorted together (operating undetected), and circuit continuity to ground and power. The VPA and VPA2 signals operating in a short circuit state (undetected by the ECM)

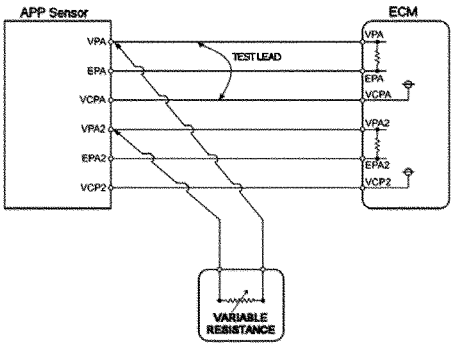

were given a circuit path to EPA AND EPA2 (ground). Additionally, the shorted VPA and VPA2 signal circuits (undetected by the ECM) were tested with a circuit path to the VCPA and VCP2 (5 Volt supply). These tests were made during both: KOEO, and KOER conditions. Several different combinations of trials were made before discovering that when VPA and VPA2 were shorted together, with an undetectable resistance, and a connection was made from either VCPA or VCP2 to the VPA2 circuit *only* – both VPA voltages would rise together in unison. As a direct result of the connection to the VCP 5 volt supply circuit, the ECM responded by opening the engine's throttle. Surprisingly, the ECM was repeatedly unable to detect this serious circuit fault abnormality. The vehicle showed no MIL illumination nor stored DTC in the ECM. Most alarming during KOER trials, the engine speed increased almost instantaneously to the full operating RPM limits of the engine. The resulting condition was also present with or without brake pedal application.

At this point, the back-probing of the APP circuits and ETC testing procedures were re-evaluated. All Toyota test vehicles were considered operationally unstable, with the known potential to reach Wide Open Throttle (WOT) anytime after the engine was started. For more extensive investigation on the research vehicles, wire test leads were tapped directly into the APP wiring harness. The decisive reasoning for installing wire taps was to provide more secure and stable connections to the APP circuitry. By providing more accessible and manageable "pin-out" connections of the APP circuits, testing methods were enhanced with more reliable voltage and resistance measurements. Plus, secure and clearly labeled circuit connections provided for a much safer laboratory testing environment. Evaluation tests were now more narrowly focused on the capabilities of the ECM to detect fault conditions to set a DTC P2138. DTC P2138 is the code used to detect the presence of a short between VPA and VPA2 signal circuits. Resistance values for shorted VPA and VPA2 signal circuits,

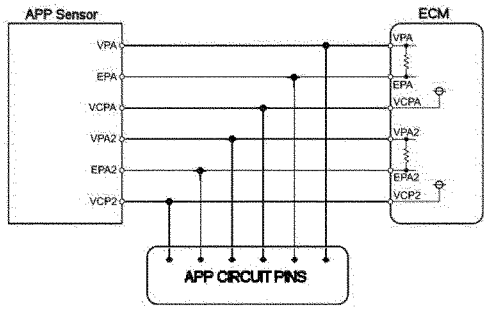

in combination with a short to the VCP 5 Volt supply circuit, were examined and recorded for threshold parameters. In addition, vehicles were tested to see if these shorted signal circuit conditions and WOT, could be active while the vehicle transmission was in drive and service brakes applied and released. For obvious safety reasons, these more extreme tests were performed outside the laboratory in an uninhabited open parking area.

Summary

After completing preliminary tests for APP sensor signal voltages for the Toyota Electronic Throttle System, it was determined that ECM malfunction detection strategies were not sufficient to identify all types of fundamental APP sensor and/or circuit malfunctions. Some types of ETC circuit malfunctions were detectable by the ECM, and some were not. Most importantly, the Toyota detection strategies were unable to identify malfunctions of the APP sensor signal inputs to the ECM. APP sensor signal circuits must be undeniably correct to electrically convey the appropriate driver commands to the ECM.

With the two APP sensor signals shorted together through a varying range of resistances, all four Toyota vehicles reacted similarly and were unable to detect the purposely induced abnormality. The types of signal faults introduced into the APP circuit should have triggered the vehicles' ECM to illuminate a MIL within seconds. The ECM should have then set a DTC, entered the vehicle "fail-safe" mode, and reduced engine speed and/or power. When the two APP signal circuits are shorted together, the redundancy of the APP circuit design is effectively nullified and lost. In other words, neither of the shorted APP signal circuits can be verified by the ECM as either; correct or incorrect. The condition then exists for a serious concern for driver safety. In the tested Toyota ETC vehicles, incorrect or corrupted APP sensor signal inputs could potentially result in unwanted engine speeds. Additional research should be done to determine if other vehicle manufacturers may have similar inconsistencies in ETC circuit fault detection.

Using shorted APP signal circuit fault conditions purposely installed on the test vehicles, and with known resistance values that would not set a DTC, vehicle operational behaviors were also noted. It was observed that all test vehicles could be operated without the ECM detecting the induced malfunction. Depending on the resistance value of the APP signal circuit fault, a vehicle may or *may not* experience noticeable changes in accelerator pedal operational behavior. Observed accelerator pedal operational characteristics included: normal response, sluggish response, and travel with inconsistent engine speeds. It is conceivable that a driver of an ETC vehicle may not appreciatively notice that an APP sensor and/or circuit malfunction currently exists. Without the aid of an illuminated MIL, a driver could be unaware of electrical problems within the ETC system. In addition, the shorted APP signal circuits were connected momentarily to the sensor's 5 Volt supply circuit with the vehicle in drive. In all test vehicles, the ECM did not set a DTC and the engine speed increased rapidly to full throttle. This result shows that unusual or sudden unintended acceleration of the vehicle was possible in the ETC test vehicles. It should be noted that in all test vehicle cases, the electronic throttle valve *instantaneously* moved to wide-open position when the fault was introduced. More research should be done to determine the extent of Toyota ETC vehicles that could be affected by this condition.

In review of the TIS service information, collected vehicle data, and performance observations; some general assumptions can be drawn from the research completed to date. The inability of the Toyota ECM to detect certain types of short circuit malfunctions could fall back to the basic design of the normal APP signal voltage limitations. The parameters for APP signal short circuit fault detection are apparently too lenient. In the Toyota ETC system, the APP sensor signal voltages rise simultaneously in direct response to accelerator pedal depression. With this design, interconnected signal circuits could be more difficult to identify with a circuit fault detection strategy that uses only threshold voltage limitations.

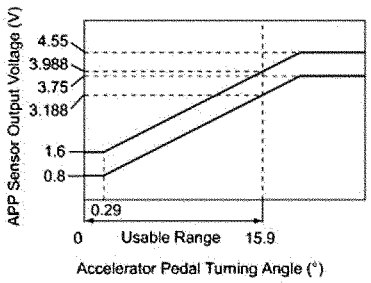

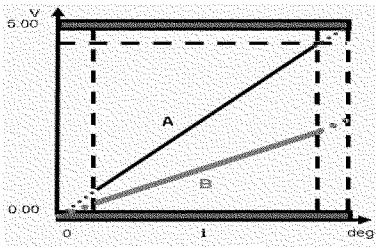

A more conclusive circuit fault detection strategy could use APP signal voltages (see A & B) that have rising slope, but with offset voltages that increase at slightly different rates. Several vehicle manufacturers currently use this fault detection strategy for APP sensor signal circuits. The obvious advantage, of using two different angles of increasing voltages from the APP signal circuits, is that the signal voltages are never consistently rising at the same rate. In this design, short circuit connections between the two APP signal circuits would ultimately be detected by the ECM because the signal voltages should never increase at the same rate or angle.

Recommendations

In this preliminary report, the initial findings question the integrity and consistency of Toyota ECMs to detect potential ETC system circuit malfunctions. The importance of these issues raised in the ETC system fail-safe strategies should not be underestimated. Sudden unintended acceleration of a vehicle is a very serious safety concern that should be addressed without delay. While the small sample of Toyota vehicles cannot be representative of all, these primary findings most certainly warrant further investigation and study. Additional Toyota vehicles of different build years and models should be evaluated for their capabilities of ETC system circuit malfunction detection.

A second recommendation should be a thorough technical investigation and evaluation of ETC fail-safe strategies of Toyota, and possibly other vehicle manufacturers, that experience sudden unintended acceleration that do not appear to be caused by floor-mats or sticking pedals. Priority would be studies of identified vehicles with a high rate of ETC system related incidences, concerns, or failures involving sudden unintended acceleration.

Appendices

Toyota Electronic Throttle Control Investigation Vehicles

---

1) 2005 Toyota Avalon (4T1BK36B55U001024)
2) 2006 Lexus IS350 (JTHBE262762001849)
3) 2007 Toyota Tundra (5TBBV54177S449783)
4) 2009 Toyota Matrix (2T1GE40E19C001003)

Additional Appendices and supporting data will be provided when completed.

Neil Hannemann
Automotive Engineer
7212 Durango Circle
Carlsbad, CA 92011

February 21, 2010

One Hundred Eleventh Congress
Congress of the United States
House of Representatives
Committee on Energy and Commerce
2125 Rayburn House Office Building
Washington, DC 20515-6115

Attention: The Honorable Henry Waxman, Chairman, Energy and Commerce Committee
The Honorable Bart Stupak, Chairman, Subcommittee on Oversight and Investigation

RE: Exponent Inc. Test Report, *Testing and Analysis of Toyota and Lexus Vehicles and Components for Concerns Related to Unintended Acceleration.*

Dear Chairman Waxman and Chairman Stupak,

I have reviewed the referenced report, and I have assessed the findings of the report. I am assessing this report as a stand-alone document; I have not been provided with any other supporting documents. There are statements that the work is ongoing, so there may be additional information that is not included in this report.

There are potentially broader causes of sudden unintended acceleration than the sticking pedals and floor mats that have been the subject of the recent Toyota recalls. The Exponent report is not limited to these specific items and, in fact, actually ignores both of these causes to explore other possibilities.

Scientific Method

Overall this report does not follow a scientific method. A typical scientific method is composed of the following 6 steps; Problem, Data collection, Hypothesis, Experiment, Observation, Conclusion.

There is no effective statement of the problem. This should have included an FMEA (Failure Mode Effects Analysis). This is standard practice in the automotive industry,

and while not performed on all components it is certainly required for new technology such as the Toyota ETCS-I system. Considering the safety aspect of the new technology of "throttle by wire" is another factor that would demand an FMEA. If Exponent were not provided with the FMEA that Toyota had performed as part of their product creation process, then they should have started their analysis by performing their own FMEA. Exponent jumps directly to purchasing vehicles and components and performing evaluations.

The Data Collection step of a scientific process should have included the customer reports and claims, or at least a summary of the analysis of the NHTSA database that Exponent states was performed. There should also have been an analysis of Toyota's own customer complaint and warranty database. It would have also been useful to study a vehicle or components that exhibit the behavior that resulted in the Toyota recall for the accelerator pedal.

There is no statement of a hypothesis. Exponent jumps directly to evaluating only the 2 electrical outputs of the throttle, the 2 outputs of the throttle position sensor and the throttle position motor. There is no discussion of the conditions under which these evaluations are performed.

While the testing and observations appear quite extensive and follow a well defined protocol, it is not clear if the testing is appropriate to the issue, since the extent of the problem was not defined. There are also major categories of testing that were not addressed such as; EMI/RFI (electromagnetic interference/Radio frequency interference), environmental conditions, and underhood operating environment conditions.

To even have a conclusion with such a poorly stated problem is inappropriate. If there is still testing in progress then the stated conclusion is actually more a progress status rather than a conclusion.

Assessment of report content:

Overall, rather than an evaluation of vehicles and components as the title states, this evaluation seems limited primarily to the electrical signals of two sets of sensors. There appears to be no attempt to evaluate the ETCS-i as a system. There are also other components that make up the ETCS-i as a system. These would include the throttle body hardware, the wiring and the ECM. The software algorithms in the ECM also make up part of the total system. There was no testing or analysis of the throttle body hardware, the wiring, the ECM or the software.

Additional assessment of report findings:

1. Regarding the Honda pedal that was evaluated, the statement that "The functionality was found to be very similar to that of the Toyota and Lexus pedals" is not one with which I agree. The Honda pedal characteristics include diverging slopes for the high and low sensor signals. The Toyota and Lexus pedals all

appear to have identical slopes. The Honda pedal reaches a maximum signal well before the maximum travel of the pedal is reached--different than most of the Toyota or Lexus pedals.

2. Reviewing the photos of the pedals characterized as hall effect, it appears that only one of the pedals (2007 Camry) operates in a linear fashion; the rest operate in a rotary fashion. There is no identification on the report of the pedal manufactured by CTS.
3. The 2007 Camry was the only vehicle of the 7 vehicles purchased for testing that is included in the Toyota pedal recall. There were 8 different vehicles subject to the recall. The explanation of the vehicle selections, "because they represented a cross-section of models and model-years, including vehicles with elevated and lower rates of complaints of unintended acceleration," does not seem to support the selection of only one vehicle subject to the recall.
4. Exponent did not make an attempt to study the pedal condition that was subject to the recall. As part of defining the issue it would have been a basic step to understand and recreate the condition of the recall.
5. There was no study at all of the components at a system level. The ECM component was not studied at all. There are "other vehicle state parameters" mentioned on page 2 of the report that affect the current that the ECM sends to the throttle control motor to control the position of the throttle plate, but Exponent did not even identify what inputs these might be, or the algorithms controlling them. A study of competitors systems rather than just components would have identified features and inputs such as brake switch controlled throttle cut out that could be used.
6. Exponent states that their "testing included a wide variety of perturbations and anomalies imposed on the electrical signals". My assessment is that the variety was rather limited. There were "short" conditions, "open" conditions and increases/decreases to the voltages. There was no consideration to voltage spikes or any type of frequency modulation that could occur. There could also be an intermittent nature to the short, open or increasing and decreasing voltage conditions. There was also no study of any EMI effects.

To address your specific questions:

1. Exponent did not use adequate methodology as explained above in the discussion about lack of a scientific method.
2. Exponent did not evaluate an adequate sample size. As stated in (3) above, of the 8 vehicles in the Toyota pedal recall only one of these was included in the 7 vehicles that Exponent evaluated.
3. The component tests were not likely to identify the potential cause of unintended acceleration. In fact, as stated in (4) above, Exponent did not even attempt to understand or recreate the pedal conditions that were the subject of the Toyota recall.

4. The environmental conditions were not discussed in this report. Therefore, it is difficult to state if the test conditions represented an appropriate sample of real world driving. However, there was no attempt to study any EMI effects.
5. Exponent makes the statement in their conclusions that "When Exponent induced failures of the position sensor in the accelerator pedals or throttle bodies, or caused a significant shift in the calibrations of these sensors, these changes were detectable by the ECM". This does not allow one to conclude that this would record all unintended acceleration events in Toyota vehicles. In fact, there were no unintended acceleration events induced by Exponent or that occurred at any point in the testing.

Summary:

While the testing that Exponent did appears to be technically accurate there are major flaws in the methodology and almost nothing added to the overall understanding of the concerns of the unintended acceleration phenomenon that is the subject of a massive Toyota recall.

In the conclusion of the Exponent report it is stated that they were unable to induce unintended acceleration and that the vehicles behaved normally in all cases. This goes against the concept that "Absence of proof is *not* proof of absence" [1]. This report alone does very little to prove that there are no other potential causes of unintended acceleration in Toyota vehicles.

Sincerely,

Neil Hannemann

[1] "*Absence of proof is not proof of absence*" Keith Armstrong, The EMC Journal, September 2008.

The Honorable Marsha Blackburn

1. *Mr. Gilbert, you were on TV where you presented a theory that moisture, corrosion or wear could cause a condition that would result in sudden, unwanted acceleration. If moisture, corrosion and wear were to cause this specific condition you demonstrated last night, wouldn't a technician be able to find evidence of this moisture, corrosion and wear after a sudden acceleration incident. And if this is happening as often as we are being led to believe, wouldn't we have a warehouse full of these worn and corroded parts?*

Dear Honorable Representative Blackburn,

It is my sincere desire to answer your question to the fullest extent. In an attempt to do so, I have divided your written question so that I may respond more clearly.

Mr. Gilbert, you were on TV where you presented a theory that moisture, corrosion or wear could cause a condition that would result in sudden, unwanted acceleration.

Response:

The statement concerning moisture, corrosion or wear was truly intended to be presented as just few common examples of how electrical problems could occur. In addition to moisture, corrosion or wear, other factors that can cause electrical problems should also be considered. Some potential causes of electronics failures could also include: poor connections, manufacturing defects, extreme temperature variations, excessive electrical current, vehicle vibrations, voltage spikes, and electrostatic discharges just to name a few.

If moisture, corrosion and wear were to cause this specific condition you demonstrated last night, wouldn't a technician be able to find evidence of this moisture, corrosion and wear after a sudden acceleration incident.

Response:

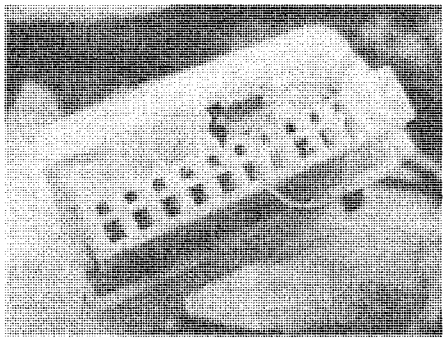

Maybe. There are some types of electrical connection and component failures that are clearly visible, but there are also electrical component failures that cannot be readily spotted. Depending on the extent and severity of the corrosion, outward evidence can sometimes be identified with a simple visual inspection. The example shown at the right is a defective wiring connector for to an "air bag" deployment module. Inside the red circle, green corrosion can be easily noticed on the inside of the connector wiring cavity. After determining the problem area with electrical tests, it was an easy task to unplug this connector and visually inspect it for signs of corrosion.

Some damaged parts may take more effort for a technician to inspect. At the right and below is an example of a damaged electronic throttle body assembly.

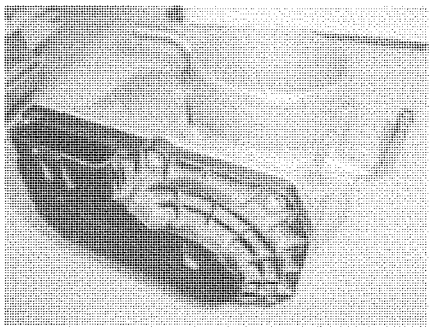

While in service, this particular electronic throttle body would occasionally stick. Luckily, it usually stuck in the closed position and with the engine at idle speed. I might also add that it did not always stick, and it did not always set a diagnostic trouble code for this mechanical malfunction.

In order to actually see the rust and corrosion damage inside this component, the cover rivets had to be drilled off to gain access. There is evidence of water intrusion inside the red circles. To disassemble this part is not a particularly difficult task, but one that does takes some time. This vehicle had just passed beyond the manufactures' normal warranty period. Due to the high cost of this part, this vehicle owner chose to replace it with a used part from a salvage yard.

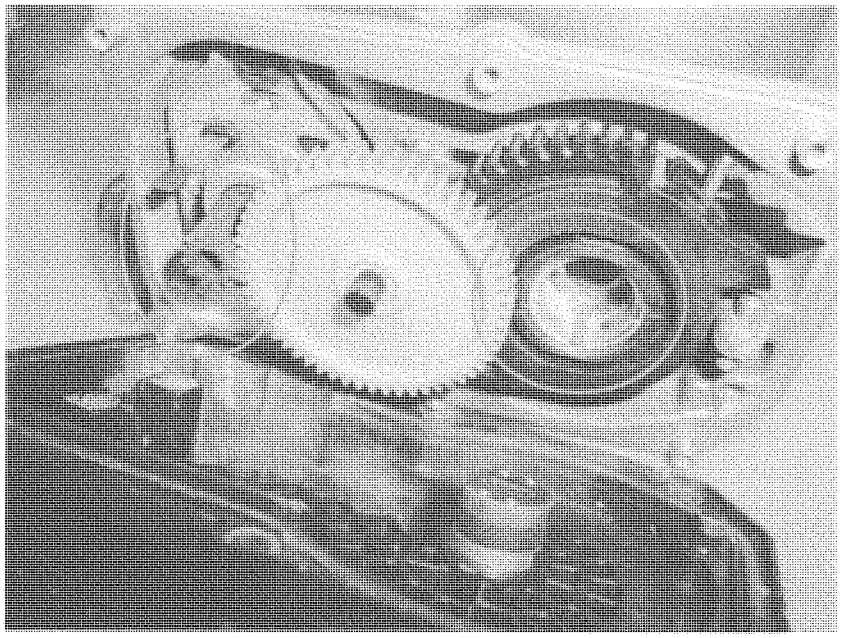

Some defective parts show no outward signs of failure, and can only be identified through more complicated electrical testing procedures. Generally speaking, electronic modules (or computers) are identified as good or bad, after all wiring and connections have been eliminated as a potential problem. Below is a typical example of an engine control computer that is defective.

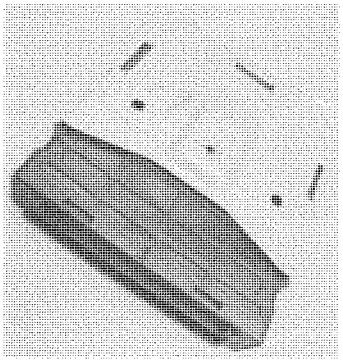

This computer looks perfectly fine on the outside, with no visible sign or evidence proving it to be defective.

Most computers are not designed to be disassembled for inspection, and many are sealed tight against the elements. In addition, there are not serviceable parts inside to typically replace.

As you can see in the photo below, there is a great deal of very small integrated circuits inside. One of these tiny circuits is bad-but I honestly cannot identify which one. They all look the same.

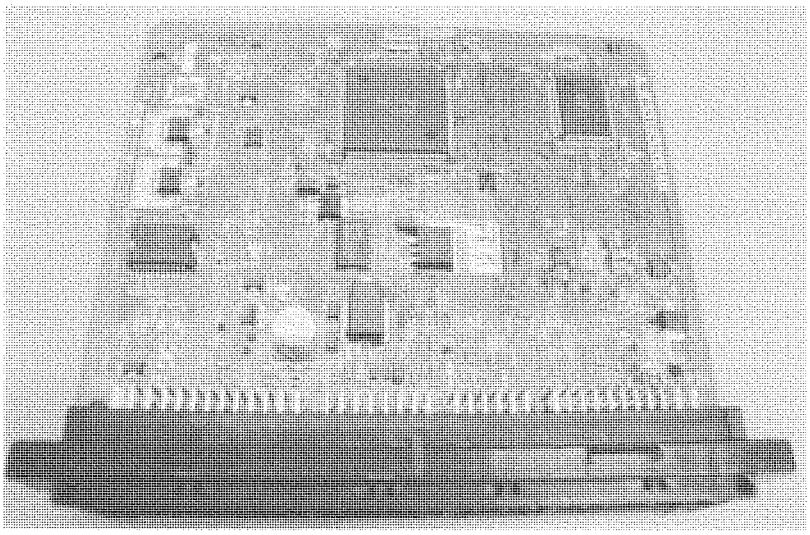

Vehicle computers may have numerous electronic devices combined (or integrated) into a small plastic housing or chip. When they fail, the evidence may be impossible to see visually. This is what makes automotive diagnostics much more difficult with today's vehicles.

And if this is happening as often as we are being led to believe, wouldn't we have a warehouse full of these worn and corroded parts?

Response:

Yes, if all parts failed due to corrosion, maybe we would. As I have attempted to show, defective electronic parts are not always worn and corroded. And, some failed or corroded parts are not always easy to see without major disassembly of an otherwise sealed unit. Electrical diagnostics may be the only means to clearly identify a defective electronic component. Even more challenging, electronic parts do not always fail completely and/or may fail intermittently. I have personally witnessed some bizarre intermittent problems that have eluded positive diagnosis for days, months, and in a few cases - years.

I sincerely hope that your excellent question has been answered satisfactorily. If you have any additional questions, comments, or wish to discuss this further; please contact me as needed.

Sincerely

David W. Gilbert

HENRY A. WAXMAN, CALIFORNIA
CHAIRMAN

JOE BARTON, TEXAS
RANKING MEMBER

ONE HUNDRED ELEVENTH CONGRESS

Congress of the United States
House of Representatives

COMMITTEE ON ENERGY AND COMMERCE
2125 RAYBURN HOUSE OFFICE BUILDING
WASHINGTON, DC 20515–6115

Majority (202) 225–2927
Minority (202) 225–3641

March 11, 2010

James E. Lentz
President and Chief Operating Officer
Toyota Motor Sales, U.S.A., Inc.
19001 South Western Avenue
Torrance, CA 90501

Dear Mr. Lentz:

Thank you for appearing before the Subcommittee on Oversight and Investigations on February 23, 2010, at the hearing entitled "Response by Toyota and NHTSA to Incidents of Sudden Unintended Acceleration."

Pursuant to the Committee's Rules, attached are written questions for the record directed to you from certain Members of the Committee. In preparing your answers, please address your response to the Member who submitted the questions.

Please provide your responses by March 25, 2010, to Earley Green, Chief Clerk, in Room 2125 of the Rayburn House Office Building and via e-mail to Earley.Green@mail.house.gov. Please contact Earley Green or Jennifer Berenholz at (202) 225-2927 if you have any questions.

Sincerely,

Henry A. Waxman
Chairman

Attachment

KING & SPALDING

King & Spalding LLP
1700 Pennsylvania Ave, NW
Suite 200
Washington, D.C. 20006-4707
Tel: (202) 737-0500
Fax: (202) 626-3737
www.kslaw.com

Theodore M. Hester
Direct Dial: 202-626-2901
thester@kslaw.com

March 26, 2010

The Honorable Bobby L. Rush
U.S. House of Representatives
2416 Rayburn House Office Building
Washington, D.C. 20515-6115

Dear Congressman Rush:

I am writing on behalf of Toyota Motor Sales, U.S.A., Inc. ("TMS" or "Toyota") to follow-up on a question you raised at the February 23, 2010 hearing that addressed a number of issues related to unintended acceleration in various Toyota models. Toyota welcomes the opportunity to clarify the matters you and other members of the Committee have raised, and has asked me to provide the following response to your question.

Specifically, during the hearing you asked for further information on the recent crash in Dallas, Texas. The December 26, 2009 accident occurred in Southlake, Texas (a suburb northwest of Dallas) and involved a 2008 Toyota Avalon. Monty Hardy, age 56, was driving with 3 passengers in the vehicle; Sharon Ransom, age 56, Hadassah Vance, age 35 and Wendy Akion, age 38. The Avalon was subject to both the floor mat and sticky pedal recalls. Hardy was approaching a stop sign at a T intersection when he went through the stop sign at the top of the T, through a fence, struck a tree, and then the vehicle flipped upside down into a pond. All of the occupants in the vehicle drowned. The accident was investigated by the Southlake police department. Mr. Hardy's wife told the Southlake police that they had problems with the accelerator pedal sticking and that they had received a recall on the vehicle and taken it to a dealer. Mrs. Hardy also told the police that Mr. Hardy had epilepsy and had recently started a new medication. A witness who saw the Avalon proceed through the stop sign said that she did not see anyone behind the steering wheel, and the police indicated Mr. Hardy may have been having some kind of medical event. NHTSA contacted the Southlake police and asked them to remove the accelerator pedal from the vehicle. Police personnel oversaw removal of the pedal. They noted that it was free from obstruction. The driver's floor mat was found in the trunk, so entrapment of the mat could not have been a factor. Toyota has cooperated with the Southlake Police and at their request downloaded the EDR data and also provided it to representatives of all of the deceased parties. This EDR did not have any pre-crash data.

If you have any questions regarding this matter, or need additional information, please call me at 202-626-2901.

Sincerely,

Theodore M. Hester

cc: The Honorable Henry A. Waxman, Chairman
Committee on Energy and Commerce

The Honorable Bart Stupak, Chairman
Subcommittee on Oversight and Investigations

The Honorable Joe Barton, Ranking Member
Committee on Energy and Commerce

The Honorable Michael C. Burgess, Ranking Member
Subcommittee on Oversight and Investigations

KING & SPALDING

King & Spalding LLP
1700 Pennsylvania Ave. NW
Suite 200
Washington, D.C. 20006-4707
Tel: (202) 737-0500
Fax: (202) 626-3737
www.kslaw.com

Theodore M. Hester
Direct Dial: 202-626-2901
thester@kslaw.com

March 26, 2010

The Honorable Marsha Blackburn
U.S. House of Representatives
217 Cannon House Office Building
Washington, D.C. 20515-6115

Dear Congresswoman Blackburn:

I am writing on behalf of Toyota Motor Sales, U.S.A., Inc. ("TMS" or "Toyota") to you in response to your written follow-up questions to the February 23, 2010 hearing that addressed a number of issues related to unintended acceleration in various Toyota models. Toyota welcomes the opportunity to clarify the matters you and other members of the Committee have raised, and has asked me to provide the following responses to your questions.

1) **In addition to Toyota going beyond recalling vehicles and voluntarily halting US sales and production of 8 models, what other subsequent remedial measures is Toyota taking to ensure that these safety issues are being fixed as quickly as possible?**

Toyota engineers quickly developed and rigorously tested solutions for the accelerator pedal issues that led to the recalls. The remedies are simple, effective and durable. Toyota's dealers have been working around the clock to fix vehicles on the road, servicing more than a million vehicles to date.

To facilitate the repairs and reduce any inconvenience, Toyota is providing unprecedented services for Toyota owners nationwide. These include expedited scheduling of the repair, pick up and return of the vehicle by a dealership representative, driving the customer to his or her place of work, and where necessary providing alternate transportation, such as a rental car or taxi reimbursement for the reasonable period that the customer is unable or unwilling to use his or her car.

Moreover, Toyota is taking additional steps to bolster customer confidence in the safety and reliability of its vehicles. Toyota is installing a brake-override system, which cuts engine power in case both the accelerator and brake pedals are applied at the same time, in seven existing vehicle models. Toyota is also installing the brake-override system in all its new models sold in North America, and will be one of the first full-line automakers to make this standard across its fleet. Toyota's hybrid vehicles, including the Prius, have a function that is designed to reduce engine power, and, as a result, has a similar effect to the brake-override system.

To further validate the safety of Toyota vehicles' electronics, Toyota has asked Exponent, a leading engineering and scientific consulting firm, to conduct a comprehensive independent evaluation of Toyota's electronic throttle control system and will make their findings public. Finally, Toyota is making greater use of event data recorders and other on-board vehicle diagnostic tools, and is sending teams of technicians on-site to promptly inspect reported UA incidents so that Toyota can aggressively assess and address any safety concerns.

2) What efforts has Toyota made in communicating what the company and its dealers are doing regarding the recalls? Has this been enough in your estimation?

Toyota is improving communications about safety issues within the company, with regulators, and with the American public. Toyota appreciates the opportunity that its executives had to inform the House committee you serve on as well as two other Congressional panels about the recalls and its efforts to ensure that its cars are safe and reliable.

Toyota is providing timely, regular updates about defects and recall procedures to dealers and directly to consumers on Toyota.com. Toyota created a designated recall website. Toyota has made executives and experts available to media for in-depth explanations and demonstrations about Toyota's safety measures to prevent unintended acceleration and electromagnetic interference, among other issues.

Toyota has pledged its full cooperation with Congress and NHTSA, and has proposed regular quarterly meetings with the agency in addition to special meetings, as needed.

Toyota is committed to maintaining open and robust channels of communication about safety issues with regulators and the public.

3) What kind of feedback has Toyota received from customers concerning the recall and its efforts to fix the safety issues?

Some of Toyota's customers reacted initially the same way Toyota's employees and management did over the recent recalls: They were disappointed that Toyota had not lived up to the high standards they had come to expect from Toyota regarding safety and reliability. More recent feedback ranging from customer emails to independent surveys show that the underlying confidence in Toyota – built up over 50 years of commitment to serving U.S. consumers – and the safety of Toyota's products remains strong.

One of the clearest expressions of that confidence is the strong message from Toyota's dealers. Not only are loyal customers coming back and expressing comfort with Toyota now that the facts are coming out, but Toyota is also seeing many first-time Toyota shoppers. Many of the customers who have brought their vehicles to Toyota dealers during the recalls told them that Toyota produces many of the best vehicles on the road, and Toyota deeply appreciates their loyalty.

4) **At this point in time, is Toyota planning to lay off any U.S. workers as a result of the current recall? Given the difficulties facing the entire auto industry in the recent past, and Toyota in light of the recent recalls, how many employees has Toyota laid off in the recent past?**

Despite the downturn in the U.S. auto market and the recent recalls, Toyota has not laid off any permanent employees. While Toyota has adjusted some production schedules to keep inventory at acceptable levels, Toyota has not furloughed any workers.

5) **What kind of impact do you think these recalls will have on the Toyota Company in the long term?**

Toyota acknowledges that it have not lived up to its own high standards, but Toyota believes that it has learned lessons and is responding in ways that will strengthen Toyota now and for the long term.

The changes that President Akio Toyoda has announced as part of a top-to-bottom review of global operations are aimed at reaffirming safety as Toyota's top priority, eliminating quality and communications gaps that have come with growth and bringing us closer to regulators and consumers so that Toyota can respond more quickly to any concerns.

Importantly for the U.S. market, Toyota's North American operations will also have more autonomy and decision-making power with regard to recall and other safety issues.

6) **Why did Toyota stop production on so many of its vehicles last month? What happened to the people who work in Toyota's factories? Were they laid off? Furloughed?**

Toyota temporarily halted production of the eight models subject to the accelerator pedal recall in order to focus fully on fixing this problem in the vehicles that are on the road. Toyota's entire organization of 172,000 North American employees and dealership personnel mobilized to help with its efforts. Because Toyota was able to receive the parts for the reinforced pedal earlier than originally expected, it resumed production one week after it was suspended.

The approximately 14,000 workers affected by the temporary shutdown received additional training or worked on improvements to their assembly lines. They also had the option to take vacation or unpaid leave. The same terms applied for subsequent brief production suspensions at Toyota's Kentucky and Texas plants, which Toyota undertook to keep inventory at acceptable levels. In no case were any of Toyota's workers furloughed. In fact, despite the downturn in the U.S. auto market, and the temporary production halt, Toyota has not laid off any permanent employees.

7) **In addition to fixing the current safety issues, what efforts has Toyota made to spot safety issues sooner in the manufacturing process?**

Toyota has launched a comprehensive review of its quality-control processes from design to production, sales and service. Toyota has formed a new North American Quality Task Force, led by senior automobile manufacturing executive Steve St. Angelo, which will work closely with a North American Quality Advisory Panel of distinguished independent experts, led by former U.S. Secretary of Transportation Rodney Slater, that is being assembled to advise Toyota's North American affiliates on quality and safety issues (see Attachment A). Since appearing before Congress in February, Toyota President Akio Toyoda has visited assembly lines in Kentucky and Japan to meet workers and personally reinforce the message that Toyota must put customer safety first.

In the U.S., Toyota is establishing the new position of Regional Product Safety Executive as well as an Automotive Center of Quality Excellence, where a team of engineers will be dedicated to studying quality and safety issues in Toyota's vehicles and North American manufacturing facilities. Toyota's North American operations will also have more autonomy and decision-making power with regard to recall and other safety issues.

8) **Two weeks ago in the Washington Post, Mr. Toyoda highlighted a plan to bring transparency to the company's efforts to remedy the problem. Can you shed some light on what's been done and what will be done? How is the company working to ensure that this doesn't happen again, and what are you doing to reassure Toyota owners that their vehicles are safe to drive?**

As stated above, Toyota has begun a top-to-bottom review of all its operations, led by President Akio Toyoda. Toyota is making fundamental changes in the way the company operates in order to ensure that Toyota sets an even higher standard for vehicle safety and reliability, responsiveness to customers and transparency with regulators.

At a global level, Toyota has established a Special Committee for Global Quality, led by Mr. Toyoda. It will thoroughly review Toyota's operations and make changes to ensure problems of this magnitude do not happen again. In addition, the North American Quality Task Force will work in concert with the Special Committee. Toyota is also putting a system in place to better share important quality and safety information across its global operations and to work more closely with government agencies, including NHTSA in the United States.

At a regional level, Toyota will ensure that its customers' voices will be heard and acted upon in a timely manner. In the United States, Toyota has already begun to investigate consumer complaints more aggressively by quickly deploying teams of technicians to make on-site inspections of unintended acceleration reports. As noted above, Toyota is establishing the new position of Regional Product Safety Executive, and the North American operations will have more autonomy and decision-making power with regard to recall and other safety issues. And, an independent North American Quality Advisory Panel led by former Transportation Secretary Rodney Slater will advise the company on quality and safety issues.

At the customer level, Toyota is taking significant steps to bolster confidence in the safety and reliability of Toyota vehicles. Toyota will be one of the first full-line automakers to make brake-override systems standard on all its new models sold in North America. Toyota hybrids already have a system that achieves a similar result, and Toyota is installing brake override on seven existing models.

Toyota's dealers are making an extraordinary effort to carry out repairs on recalled cars quickly and effectively. Toyota is confident that with the fixes its engineers have developed, Toyota vehicles are among the safest on the road today. Toyota will work vigorously and unceasingly to restore the trust of its customers by further improving on the quality of Toyota vehicles and fulfilling the principle of putting its customers first.

If you have any questions regarding this matter, or need additional information, please call me at 202-626-2901.

Sincerely,

Theodore M. Hester

cc: The Honorable Henry A. Waxman, Chairman
Committee on Energy and Commerce

The Honorable Bart Stupak, Chairman
Subcommittee on Oversight and Investigations

The Honorable Joe Barton, Ranking Member
Committee on Energy and Commerce

The Honorable Michael C. Burgess, Ranking Member
Subcommittee on Oversight and Investigations

Attachment A

FOR IMMEDIATE RELEASE

Contact: Mike Goss (859) 746-6676

St. Angelo to lead Toyota's North American quality assurance

Chief Quality Officer will oversee new Task Force in concert with President Akio Toyoda's Special Committee for Global Quality

Regional Product Safety Executive Dino Triantafyllos will play key North American role in recall and other safety decisions

ERLANGER, Ky. (March 25, 2010) – Toyota announced today that it has formed a new North American Quality Task Force led by senior automobile manufacturing executive Steve St. Angelo, who is Executive Vice President of Toyota Motor Engineering & Manufacturing North America (TEMA). He will guide the implementation of regional improvements in concert with the Special Committee for Global Quality led by Toyota Motor Corporation President Akio Toyoda.

Mr. St. Angelo was appointed to the new role of Chief Quality Officer for North America. He will serve with counterparts from the other regions on Mr. Toyoda's committee, which meets for the first time on March 30 in Japan.

Each regional task force is specifically charged with executing a six-point action plan outlined by Mr. Toyoda on February 5. Its elements include improved quality assurance; enhanced customer research; strengthened quality management training; incorporation of best practices through outside professionals; closer cooperation with regulatory authorities; and improved regional autonomy.

"We are making fundamental changes in the way our company operates in order to ensure that Toyota sets an even higher standard for vehicle safety and reliability, responsiveness to customers, and transparency with regulators." Mr. St. Angelo said. "The new organization will open the lines of communication globally and enable us to respond faster here in North America to any concerns about our vehicles. In keeping with Akio Toyoda's mandate, North America will have greater autonomy and play a critical role in decision making on recalls and other safety issues."

The North American Quality Task Force will bring together the senior executive management of Toyota's research and development, manufacturing, sales, and regulatory divisions and include a newly appointed Regional Product Safety Executive. Dino Triantafyllos, the vice president of quality at TEMA, will oversee the processes that improve the visibility of customer concerns, expedite North American safety-related proposals, and play a key role in decision-making with regard to recalls and other safety issues in the field.

"The aim of our new quality task force is to assure that all of us in North America listen and respond to the voice of the customer," said Mr. Triantafyllos. "My primary responsibility is to assure that we utilize all of the data at our disposal and that we promptly decide the appropriate action."

Attachment A

The North American Quality Task Force will work closely with former U.S. Transportation Secretary Rodney Slater, whom Toyota named on March 2 to lead an independent North American Quality Advisory Panel. Mr. Slater is working with Toyota to appoint four more independent members to the panel.

Toyota (NYSE:TM) established operations in North America in 1957 and currently operates 14 manufacturing plants. There are more than 1,800 Toyota, Lexus and Scion dealerships in North America which sold more than 2.05 million vehicles in 2009. Toyota directly employs more than 40,000 in North America and its investment here is currently valued at more than $23 billion, including sales and manufacturing operations, research and development, financial services and design. Toyota's annual purchasing of parts, materials, goods and services from North American suppliers totals more than $25 billion. Toyota currently produces 12 vehicles in North America, including the Avalon, Camry, Corolla, Highlander, Matrix, RAV4, Sienna, Sequoia, Tacoma, Tundra, Venza and the Lexus RX 350. For more information about Toyota, visit www.toyota.com or www.toyotanewsroom.com.

###

KING & SPALDING

King & Spalding LLP
1700 Pennsylvania Ave, NW
Suite 200
Washington, D.C. 20006-4707
Tel: (202) 737-0500
Fax: (202) 626-3737
www.kslaw.com

Theodore M. Hester
Direct Dial: 202-626-2901
thester@kslaw.com

March 26, 2010

The Honorable John D. Dingell
U.S. House of Representatives
2328 Rayburn House Office Building
Washington, D.C. 20515-6115

Dear Congressman Dingell:

I am writing on behalf of Toyota Motor Sales, U.S.A., Inc. ("TMS" or "Toyota") to you in response to your written follow-up questions to the February 23, 2010 hearing that addressed a number of issues related to unintended acceleration in various Toyota models. Toyota welcomes the opportunity to clarify the matters you and other members of the Committee have raised, and has asked me to provide the following responses to your questions.

1) **What is the date that Toyota first heard of incidents of sudden acceleration in its vehicles sold in the U.S.?**

All major vehicle manufacturers, including Toyota, have received allegations of sudden unintended acceleration in their vehicles. Unintended acceleration complaints are not new or confined to vehicles with Electronic Throttle Control System With Intelligence ("ETCS-i"). Unintended acceleration can occur in any vehicle, regardless of manufacturer, and may have multiple causes, some involving human factors such as pedal confusion and misapplication, and some involving pedal interference or mechanical causes. Toyota has searched its complaint files back to January 1, 2000. The first unwanted acceleration complaint in the files was dated January 3, 2000.

2) **What is the date on which Toyota commenced the first recall to address this problem in the United States?**

Toyota conducted its first safety recall on January 11, 2001 to address a possible accelerator cable problem in certain 1998–2001MY Camry vehicles.

3) **Since 2001, how many complaints of sudden unintended acceleration in vehicles sold in the United States has Toyota Motor Sales, USA received?**

At NHTSA's request, Toyota is in the process of performing a detailed review of the customer contacts in its customer relations database that potentially relate to unintended acceleration. As previously reported, the number of potential UA-related complaints was

overstated due to the fact that it included customer contacts in which it is clear that the customer was not claiming that a UA event occurred, such as inquiries about the scope of the recalls relating to UA, the operation of the ETCS-i, and other unrelated drivability concerns. Toyota will provide the requested information to the Committee in the form of a more detailed analysis of these customer contacts as soon as it is available. Toyota expects to be able to do so within the next two weeks.

4) **How many of these complaints has Toyota Motor Sales, USA forwarded to NHTSA?**

As to complaints reported to NHTSA, complaint reporting principally takes two forms. The first is in quarterly reports to NHTSA under the TREAD Act. We are currently gathering this information, and will provide it as soon as our review concludes.

The second form of complaint reporting to NHTSA is in response to Information Requests from NHTSA on defect investigations. Please note that the investigation, scope and content of each NHTSA investigation are specified each time by NHTSA, and therefore Toyota has submitted to NHTSA the pertinent complaints from among all claims received by Toyota. As the information below makes clear, not all NHTSA investigations on unwanted acceleration included requests by NHTSA for Toyota to provide complaint information.

- DP03-003 — No request from NHTSA for complaints
- DP04-003, PE04-021 — Customer Complaints: 123
- DP05-002 — Customer Complaints: 2
- DP06-003 — No request from NHTSA for complaints
- PE07-016, EA07-010 — Customer Complaints: 43
- DP08-001 — Customer Complaints: 478
- PE08-025, EA08-014 — Customer Complaints: 21
- DP09-001 — No request from NHTSA for complaints

5) **Yes or no. Prior to the recalls in late-2009 and early-2010, were you empowered to authorize recalls for Toyota products manufactured or sold in the United States? If not, who is?**

Mr. Lentz was not empowered to authorize recalls for Toyota vehicles.

6) **Yes or no. Is it true that the Toyota recall process for vehicles manufactured and/or sold in the United States requires the decisions concerning these recalls to be made in Japan or with Japanese oversight?**

Recall decisions are made at the quality problem review meeting that is held in Japan. Going forward, the North American quality chief will be represented at this meeting and will have input in the decision whether to issue a recall. There will be an appeal process from decisions made at these meetings that did not previously exist.

7) **Yes or no. Is it true that Toyota had not reached a decision about whether to recall vehicle models linked to sudden unintended acceleration prior to being visited by Acting NHTSA Administrator Ron Medford in December 2009?**

The Toyota recall addressing unintended acceleration due to floor mat entrapment was announced prior to Acting NHTSA Administrator Ron Medford's visit to Japan in December 2009. This recall, "Floor Mat Entrapment," concerns the potential for an unsecured or incompatible driver's floor mat to interfere with the accelerator pedal and cause it to become entrapped in a wide-open or near wide-open position. On September 29, 2009, Toyota issued a consumer safety advisory to address the risk of floor mat entrapment of accelerator pedals in certain Toyota and Lexus models. On October 5, 2009, Toyota announced its decision to recall approximately 3.8 million vehicles. At that time, Toyota notified owners of affected vehicles to take out any removable driver's floor mat and not replace it with any other floor mat, pending the development of model-specific remedies. On November 25, 2009, Toyota announced the details of vehicle-based remedies to address the problem of potential pedal entrapment that included cutting the pedal, modifying the floor pan in certain vehicles to enlarge the distance between the pedal and the floor, and making shorter pedals that could be installed in vehicles.

The second recall, "Pedal," involves the slow return of the accelerator pedal to the idle position or, in very rare cases, the pedal may stick leaving the throttle partially open. This issue was not discussed by the participants at the meeting between NHTSA and Toyota in December 2009 in Japan. Toyota issued this recall on January 21, 2010.

8) **Yes or no. Did Acting Administrator Medford's December 2009 visit to Japan and discussions with Toyota executives have any influence on the decision to recall vehicle models linked to sudden unintended acceleration?**

It is Toyota's understanding that NHTSA had a long-planned visit to Japan in December 2009, during which it was scheduled to, and did in fact, meet with personnel from Toyota, other Japanese car makers, and the Japan regulatory entity (the Ministry of Land, Infrastructure, Transport and Tourism). In its meetings with NHTSA officials in December in Japan, Toyota and NHTSA personnel exchanged views on many subjects, and the meetings were cordial and productive. As noted above, Toyota had already made the decision to recall vehicles at risk of floor mat pedal entrapment. As explained above, with regard to the CTS pedals, the participants did not discuss the CTS pedal issues; therefore, Toyota does not believe that NHTSA's visit impacted the decision to recall its vehicles in either situation.

9) **In correspondence addressed to this Committee, certain elected officials have communicated their concern that the U.S. government's financial stake in Chrysler and General Motors represents a conflict of interest in its regulation of Toyota. Do you believe this is true? Yes or no.**

No.

10) **Yes or no. Are the reporting requirements for early warning of possible vehicle safety defects different in Japan than in the United States?**

In Japan, TMC reports the details and investigation results of accidents and/or fires in which Toyota vehicles are involved every quarter. This includes the details of defective parts or phenomena which might be attributable to the accidents and/or fires. Other information, including field reports, is subject to a yearly audit by the Japanese regulatory authority.

Toyota reports to NHTSA on a quarterly basis about the number of consumer complaints, warranty claims, property damage claims, field reports, injuries and fatalities in any Toyota (10 years old or younger) sold in the U.S., categorized by vehicle component (e.g. vehicle speed control), or certain types of events (fires, rollovers). In addition, all field reports are provided in hard copy to NHTSA; injuries and fatalities are provided with some additional information about the incident. The quarterly report includes fatalities in foreign countries in any Toyota vehicle that is "substantially similar" to a model sold in the United States. Toyota must also report foreign recalls or other safety campaigns involving "substantially similar" vehicles within five business days.

11) **Are the Japanese requirements in regard to this matter more or less stringent than American standards?**

12) **If the Japanese requirements are less stringent, does that affect how Toyota evaluates potential defects in its vehicles and influence what information the company provides to U.S. regulators? Yes or no.**

There are some differences in items to be reported between Japanese requirements and the U.S. requirements, but both countries impose periodic reporting obligations on vehicle manufacturers. Toyota cannot categorically say which requirements are more stringent than the other.

13) **Yes or No. Has Toyota definitely ruled out non-mechanical failures as the source of sudden unintended acceleration in vehicles recalled in late-2009 and early-2010?**

Unwanted acceleration claims are not new or confined to vehicles with ETCS-i. Unwanted acceleration claims can occur in any vehicle, regardless of manufacturer, and may have multiple causes, some involving human factors issues such as pedal confusion and misapplication, and some involving pedal interference or mechanical causes.

Toyota's design process is exhaustive and robust. Toyota does not believe there are any problems with the electronic throttle control system in its vehicles. The ETCS-i system in Toyota and Lexus vehicles has built–in redundancies to the system and failsafe modes that allow Toyota to say with confidence that the ETCS-i is not the cause of unintended or unwanted acceleration. The ETCS-i is designed to cause the engine power to shut off or operate at reduced power in the event of a system failure.

Exponent, a leading engineering and scientific consulting firm, is systematically evaluating the performance of the ETCS-i system in Toyota and Lexus vehicles when subjected to abnormal and fault conditions. In its interim report, previously provided to the Committee, Exponent concluded: "[D]uring extensive testing on multiple vehicles, where different electrical and mechanical [changes] were imposed on the components comprising the ETCS-i system, Exponent did not observe any instances of unintended acceleration or any circumstances that might lead to unintended acceleration. To the contrary, imposing these [changes] resulted in a significant drop in power rather than an increase. In all cases, when a fault was imposed, the vehicle entered a failsafe mode consistent with descriptions provided in the technical manuals for Toyota and Lexus vehicles."

In addition, Toyota test reports documenting the extensive developmental testing of the ETCS-i system were enclosed as an index to our March 15, 2010 letter to Chairmen Waxman and Stupak.

Finally, Toyota understands that NHTSA and NASA are also conducting their own evaluations of the ETCS-i system to determine whether there is any basis to believe that it is a cause of unwanted or unintended acceleration.

14) Has Toyota definitively determined that electromagnetic interference with or other failures in electronic throttle controls are the cause of sudden unintended acceleration in vehicles recalled in late-2009 and early 2010? Yes or no.

Toyota's testing discussed above confirms that the ETCS-i system is not susceptible to electromagnetic interference. Toyota's testing has confirmed that unwanted or unintended acceleration does not occur due to electromagnetic interference or any other electronic problem in Toyota and Lexus vehicles. Exponent's examination of electromagnetic interference is ongoing and Toyota will provide Exponent's findings to the Committee and the public as soon as these are finalized and made available to Toyota. In addition, Toyota understands that NHTSA and NASA will also evaluate the potential for electromagnetic interference with the ETCS-i.

15) I understand Toyota recently commissioned Exponent to conduct tests on certain Toyota vehicles to determine possible causes of sudden unintended acceleration. Is that true? Yes or no.

As noted, Toyota recently commissioned Exponent, a well-respected engineering and scientific consulting firm, to study Toyota and Lexus vehicles and components for concerns

related to unwanted acceleration. Exponent was not restricted by scope or by budget considerations in this review. Although its work is still ongoing, to date Exponent has found that the ETCS-i systems have performed as designed and have not exhibited any acceleration or precursor to acceleration, despite concerted efforts to induce unwanted acceleration. In all vehicles and systems tested and reported on by Exponent so far, the vehicle either behaved normally or entered the fail-safe mode.

16) Did the report conclude that electromagnetic interference was a potential cause of sudden unintended acceleration? Yes or no.

Exponent's interim report confirmed that the ETCS- i fail safes work as designed and that there were no instances of unwanted or unintended acceleration or any circumstances that might lead to unintended acceleration. Exponent's evaluation is ongoing and it is Toyota's understanding that Exponent will subject Toyota, Lexus, and competitor vehicles to rigorous electromagnetic interference testing.

17) I understand that Exponent did not subject Toyota vehicles to tests as rigorous as those of other automakers when determining if electromagnetic interference can cause failures in vehicle electronic throttle controls. Is this true? Yes or no.

As stated above, Exponent is still testing for the potential of electromagnetic interference to cause unwanted or unintended acceleration in Toyota and Lexus vehicles. When Exponent has completed its analysis of the potential for electromagnetic interference in Toyota and Lexus vehicles, the results will be provided and will contain the data and information necessary to validate Exponent's conclusions. It is Toyota's understanding that the methodology used by Exponent to evaluate the potential for electromagnetic interference with the ETCS-i will also be assessed by NHTSA and NASA.

18) How many models of Toyota vehicles did Exponent test?

In its testing of the fail safes of the ETCS-i, Exponent tested seven Toyota vehicles and one competitor vehicle for comparison. To evaluate the failure detection system of the electronic throttle control system, the following vehicles were tested: 2002 Camry, 2007 Camry, 2007 FJ Cruiser, 2008 Sienna, 2006 IS250, 2006 IS350, 2010 Avalon, and 2008 Honda Accord EX. If Exponent, NHTSA and/or NASA believe that the ETCS-i fail safes need to be evaluated on additonal vehicles, it is Toyota's understanding that Exponent will perform any such additional testing.

It is Toyota's understanding that Exponent will perform component level testing of the ETCS-i for electromagnetic interference. In addition, Toyota understands that Exponent is also in the process of performing whole vehicle electromagnetic interference testing on the following vehicles: 2003 Camry, 2007 Camry, 2007 ES 350, 2010 Corolla, 2010 Prius, 2010 Tacoma, 2007 Honda Accord, 2010 Civic Hybrid, 2007 Hyundai Sonata, 2007 Nissan Altima, and 2007 VW Jetta. Consistent with the fact that Exponent is not constrained by Toyota in the evaluation

of the ETCS-i, Toyota also understands that Exponent may perform electromagnetic testing on additional vehicles either on its own accord or at the request of NHTSA and/or NASA.

19) Yes or no. Do you feel this is an adequate sample of vehicles for the purposes of Exponent's tests?

Toyota believes the testing, as described, was and is appropriate and adequate. When Exponent has completed its analysis, the results will be provided and will contain the data and information necessary to validate Exponent's conclusions.

20) Yes or no. Are event data recorders (EDRs) installed in all Toyota vehicles sold in the United States?

All Toyota vehicles contain at least one type of Event Data Recorders (EDRs). As the attached chart shows (Attachment A), a few Toyota vehicles contain EDRs that record post-crash data only, whereas the majority of Toyota and Lexus vehicles, contain EDRs that record pre- and post-crash data.[1] For those models that only contain post-crash data, Toyota is planning to install the capability to record pre-crash data on these models by the end of 2010.

21) Would these EDRs contain information, such as recordings of vehicle component failures, that would be useful to investigators in determining the cause of an accident?

The amount and types of data recorded have evolved over time, and there may be slight variations from vehicle model to vehicle model depending on, for example, what types of airbags the model is equipped with. In general, for vehicles equipped with EDRs that record pre-crash data, the following pre-crash data is recorded by the most-recent EDR model for up to 5 seconds before the crash: vehicle speed (mph), engine speed (rpm), accelerator pedal position (off/middle/full), and brake status (off/on). When a collision is triggered that meets certain criteria, other vehicle status information is generally recorded by the most-recent EDR model, including shift position (which is not recorded in the case of post-crash only EDRs), seatbelt information, driver's seat position, passenger seat occupant information, and airbag diagnostic information. Post-crash, the type and amount of data recorded depends on the type of collision. In general, the following types and amounts of data are recorded by the most-recent EDR model: longitudinal change in velocity is recorded every 10 milliseconds for frontal or rear collision from an interval of approximately .15 to .20 seconds post-collision; lateral change in velocity is recorded every 4 milliseconds for a side collision for approximately .07 seconds post-collision; and roll angle and lateral G force every 128 milliseconds for a rollover collision for about two seconds following collision. Post-crash airbag deployment information is also recorded.

[1] In general, the EDRs only record data for collisions that meet certain criteria that are tied to the severity of the collision.

22) Yes or no. Can data from EDRs installed in Toyota vehicles be easily read by non-Toyota personnel, such as NHTSA investigators?

23) If not, please submit an explanation for the record.

On March 3, 2010, NHTSA was provided with an EDR read-out tool for Toyota vehicles, and NHTSA staff were trained how to use it. Toyota plans to provide three additional EDR read-out tools to NHTSA as soon as they become available, which will enable NHTSA or other public safety officials working with NHTSA to access EDR data on Toyota/Lexus/Scion vehicles. In addition, Toyota plans to expand the number of EDR read-out tools in North America to 150 by the end of April 2010. When the additional EDR read-out tools become available, Toyota will provide the appropriate training to recipients.

24) Prior to Toyota recalls this year and last, by whom and where could such data from Toyota EDRs be read in the United States?

A dedicated team of Toyota personnel promptly responded to any request by law enforcement, NHTSA, and court orders to read Toyota EDRs, and have assisted NHTSA and law enforcement in understanding the information recorded by the vehicle's EDR.

25) Did NHTSA require Toyota in 2006 to conduct a test on an electronic throttle component for a 2006 Toyota Camry?

26) If so, did Toyota or a designated third party conduct the test? If it was conducted by a third party, please tell the Committee its name.

27) Yes or no. Was this report submitted to NHTSA?

In 2006, NHTSA requested Toyota to provide the results of any testing conducted by or for Toyota that was related to a pending petition, NHTSA DP06-003. The background is as follows:

Toyota refers you to documents that relate to that petition. NHTSA's denial of that petition for a defect investigation was published in the Federal Register, 72 Fed. Reg. 10815 *et seq.* (March 9, 2007). In the ODI Resume summarizing NHTSA's analysis of the alleged defect, NHTSA describes the alleged defect as "a short duration (1 to 2 second) increase in engine speed occurring while the accelerator pedal is not depressed." NHTSA also states that the Petitioner "reports that the brake system is effective in overcoming the surge." NHTSA evaluated the throttle actuator from the petitioner's vehicle, but found no component problem. NHTSA also concluded that "[T]he fault detection and reaction strategy described in Toyota's technical documents indicates that a loss of throttle control due to a component or system failure would be detected within a one second period after which engine power would be limited." NHTSA also road-tested the petitioner's vehicle and observed that the "brake system overcomes full engine power at easily achievable brake pedal forces."

In its denial report, NHTSA states that ODI "arranged with Toyota to have the suspect throttle actuator sent to a facility owned by the component supplier. An analysis was conducted which included a physical inspection (including X-ray), mechanical testing, electrical testing, environmental testing, and destructive tear down. The component supplier's final investigation report, [footnote omitted] submitted to NHTSA under request for confidentiality by Toyota, concluded there was no problem associated with the component." (The component supplier's test report was submitted to NHTSA as an attachment to Response 6 of Toyota's December 20, 2006 letter to NHTSA, which responded to NHTSA's October 30, 2006 letter requesting information.)

If you have any questions regarding this matter, or need additional information, please call me at 202-626-2901.

Sincerely,

Theodore M. Hester

cc: The Honorable Henry A. Waxman, Chairman
Committee on Energy and Commerce

The Honorable Bart Stupak, Chairman
Subcommittee on Oversight and Investigations

The Honorable Joe Barton, Ranking Member
Committee on Energy and Commerce

The Honorable Michael C. Burgess, Ranking Member
Subcommittee on Oversight and Investigations

Attachment A

EDR current release status in N.A.

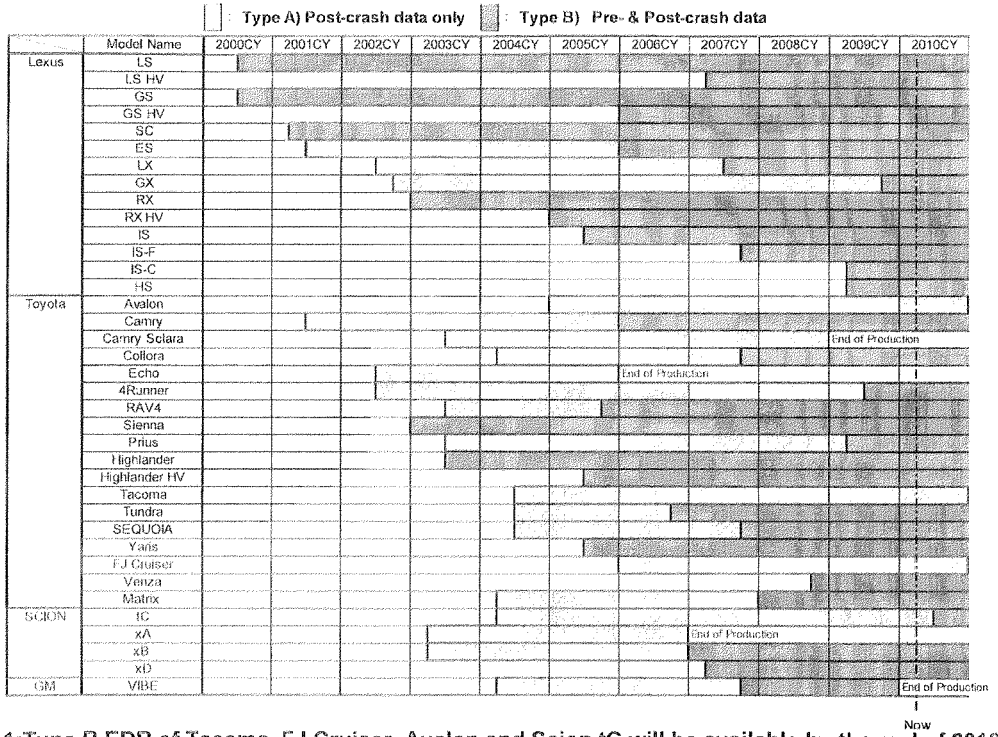

Note1:Type B EDR of Tacoma, FJ Cruiser, Avalon and Scion tC will be available by the end of 2010.
Note2:Readout tool software will be completed to prepare for all Toyota/Lexus/Scion models by the middle of April in 2010.

Secretary Ray LaHood
Questions for the Record
House Committee on Energy and Commerce
February 23, 2010 Hearing

Questions from Congressman Dingell

QUESTION I: Toyota Compliance with Statutory, Regulatory Mandates

1. Yes or no. To your knowledge, has Toyota complied with its statutory and regulatory obligations, whether mandated under the TREAD Act or otherwise, in conducting its 2009 and 2010 recalls related to sudden unintended acceleration?

   RESPONSE: At this time, we are not able to provide a yes or no answer. Please see Response #2 below.

2. If Toyota has not complied with its statutory and regulatory obligations related to these recalls, please submit for the record a description of how and what punitive action the Department of Transportation has taken as a result of this non-compliance.

   RESPONSE: At this time, NHTSA is not aware of any noncompliances by Toyota related to its 2008 and 2010 recalls. However, NHTSA is addressing three queries to Toyota that may provide information responsive to this question. NHTSA has opened two Timeliness Query investigations (one for the pedal entrapment recall and one for the sticky pedal recall). These investigations are aimed at uncovering what Toyota knew about these two problems that led to the recalls and when Toyota knew it. Please note that we recently began receiving information from Toyota in response to the two Timeliness Query investigations. If we determine that Toyota knew, or should have known, of the existence of a defect that posed an unreasonable risk to safety, the agency will pursue civil penalties against Toyota.

   Additionally, NHTSA has opened a Recall Query investigation into both recalls that is aimed at assessing whether the scope of each recall was appropriate or whether one or both of the recalls should have been expanded to additional vehicles. The Recall Query investigation is also examining whether the remedies developed by Toyota for both of these recalls are effective.

QUESTION II: Recall Statistics and NHTSA Delegation to Japan

3. Since 2001, how many reports of sudden unintended acceleration has the Department of Transportation received from Toyota Motor Sales, U.S.A., Inc.? Please submit a list and description of each and every one of these reports for the record.

   RESPONSE: By way of background, NHTSA receives significant information from manufacturers that report Early Warning Reporting (EWR) data. Light vehicle manufacturers producing 5,000 or more vehicles annually are required to report U.S. and

foreign death incidents, U.S. injury incidents and total counts of warranty claims, consumer complaints, property damage claims, and field reports (including dealer reports). In addition, these manufacturers are required to submit copies of non-dealer field reports.

Manufacturers report information in EWR under 20 general component or system categories. Sudden unintended acceleration issues normally would fall under the speed control component. However, not all speed control issues are unintended acceleration. Speed Control means the systems and components of a motor vehicle that control vehicle speed either by command of the operator or by automatic control, including, but not limited, to the accelerator pedal, linkages, cables, springs, speed control devices (such as cruise control) and speed limiting devices. Speed control may include other acceleration issues such as problems with the cruise control. In addition, incidents of sudden unintended acceleration may also have been reported under another component, such as brakes.

Since mid-2003, Toyota has reported 17 deaths and 352 injuries under the speed control component in EWR through the fourth quarter of 2009. Under the EWR regulations, these figures are based upon claims and notices received by the manufacturer. For some death and injury incidents, ODI asks the manufacturers to send the agency more detailed information. In addition, Toyota reported a death incident that may be related to sudden unintended acceleration under the structure component.

Toyota has reported 141,141 warranty claims, 11,321 consumer complaints, 1,328 field reports (including dealer field reports), and 622 property damage claims in the EWR aggregate data for speed control.

Toyota has also submitted reports on two foreign safety campaigns related to unintended acceleration.

Toyota has submitted 381 speed control field reports through the fourth quarter of 2009. We have identified 9 field reports submitted by Toyota under different components that allege or involve unintended acceleration using key word and text string searches.

Additionally, Toyota has provided consumer reports, field reports, property damage claims, law suits, and warranty claim data in response to information request letters issued during investigations or defect petitions related to allegations of unwanted or sudden acceleration (PE04021, DP05002, DP06003, PE07016, DP08001 and PE08025).

We have included copies of information mentioned in this response in the enclosed CD. Please note that early warning reporting information, other than information on vehicle production, deaths, injuries and property damage claims, is confidential. The last six characters of a vehicle identification number also are confidential. In addition, some of the information received in response to information request letters during investigations or defect petitions may be confidential. We request that you treat the information provided in this CD accordingly.

4. Yes or no. Are the Secretary of Transportation and NHTSA Administrator empowered under statute to visit foreign automakers in their home countries?

   RESPONSE: Yes.

5. Yes or no. Have Secretaries of Transportation or NHTSA Administrators done so in the past?

   RESPONSE: Yes.

6. Would you describe such visits as routine or commonplace? Yes or no.

   RESPONSE: Yes, such visits are not unusual. However, the nature of the visit by NHTSA's Acting Deputy Administrator to Japan in December 2009 was unusual because a major purpose of the visit was to convey the importance of Toyota's responsiveness to the agency's concerns regarding the defects program.

QUESTION III: Japanese vs. U.S. Requirements

7. Yes or no. Are the reporting requirements for early warning of possible vehicle safety defects different in Japan than in the United States?

   RESPONSE: It is our understanding that the reporting requirements in Japan differ from those in the United States, based on communications with our Japanese counterpart. At this time, we have made inquiries with our Japanese counterpart for an English translation of the reporting requirements in Japan. We will evaluate the relevant documents and supplement our response.

8. Are the Japanese requirements in this regard more or less stringent?

   RESPONSE: Please see Response #7.

9. Yes or no. If the Japanese requirements are less stringent, is it your experience this affects the manner in which Toyota evaluates potential defects in its vehicles and influence what information the company provides to U.S. regulators?

   RESPONSE: Please see Response #7.

QUESTION IV: Event Data Recorders

10. Yes or no. Is data contained in vehicle event data recorders (EDRs) useful to NHTSA investigators in determining the cause of an accident?

    RESPONSE: Yes. Certain EDR data can add information to be considered in addition to other field investigation items to confirm crash reconstruction data. However, the data in the current generation of EDRs is predominately related to the crash itself with very limited pre-

crash information. Accordingly, it is not always possible to determine the single "cause" of a crash. Factors, such as human (drowsy), vehicular (bald tires) and environmental (wet road), also play critical roles in a crash. The EDR data may help a crash investigator focus on factors involved in a crash sequence as well as related safety feature deployment and timing issues.

11. Yes or no. Is data from EDRs installed in Toyota vehicles easily read by NHTSA investigators?

    RESPONSE: Yes, although until recently, NHTSA investigators could not read EDRs installed in Toyota vehicles because proprietary equipment necessary to read their EDRs was available only from Toyota. As of this month, NHTSA has been able to read EDRs installed on Toyota vehicles because NHTSA received four interface units and one set of cables.

12. If not, please submit an explanation for the record.

    RESPONSE: Not applicable.

13. Yes or no. Is data from EDRs installed in other manufacturers' vehicles easily read by NHTSA investigators?

    RESPONSE: Yes, NHTSA is able to read EDR data from light passenger vehicles for most post-1994 GM products, many post-2001 Ford products, and some post-2004 Chrysler products with the use of a commercially available EDR reader, and NHTSA is now able to read EDR data from Toyota vehicles. NHTSA's Crash Investigation Division has equipped its field researchers with the commercially available units. However, NHTSA cannot read EDRs installed on most manufacturers' vehicles because they lack commercially available EDR readers. For these vehicles, NHTSA currently sends EDRs to the manufacturers to retrieve data from those EDRs. Please note that for vehicles produced after September 1, 2012 (or the 2013 model year), manufacturers are required to make EDR readers commercially available to the public within 90 days of introducing the vehicle, for vehicles that have EDRs.

QUESTION V: Exponent Study

14. Yes or no. Has the Department of Transportation received a copy of the report Toyota commissioned Exponent to perform in order to determine potential causes of sudden unintended acceleration?

    RESPONSE: Yes. We have received two Exponent reports from Toyota. We received the first, "Testing and Analysis of Toyota and Lexus Vehicles and Components for Concerns Related to Unintended Acceleration, February 4, 2010," by e-mail on February 8, 2010. We received the second, "Evaluation of the Gilbert Demonstration, March 1, 2010," by e-mail on March 2, 2010.

15. Did Exponent **not** subject Toyota vehicles to tests as rigorous as those of other automakers when determining if electromagnetic interference can cause failures in vehicle electronic throttle controls? Yes or no.

    RESPONSE: We are unable to answer this question. We are not aware of any Exponent test reports that describe testing to determine if electromagnetic interference can cause failures in vehicle electronic throttle controls.

QUESTION VI: 2006 Camry Testing

16. Yes or no. Did NHTSA require Toyota in 2006 to conduct a test on an electronic throttle component for a 2006 Camry?

    RESPONSE: Yes. During a 2006 investigation (DP06003), NHTSA arranged to have a suspect throttle body assembly removed from the Petitioner's vehicle for inspection.

17. If so, did Toyota or a designated third party conduct that test? If it was conducted by a third party, please tell the Committee its name.

    RESPONSE: Aisan Industry Company, Ltd., Toyota's supplier that manufactured the component, conducted the test.

18. What were the results of this test?

    RESPONSE: The inspection did not reveal a defect or other problem with the throttle body component.

19. Yes or no. Has NHTSA had to compel Toyota to perform similar tests on other models Toyota manufactures?

    RESPONSE: No, NHTSA has not asked or compelled Toyota to inspect any other throttle body components.

20. Yes or no. Was this report submitted to NHTSA?

    RESPONSE: Yes.

21. Yes or no. Were the contents of this report made publicly available in their entirety? If not, please explain why.

    RESPONSE: No. The report was submitted with a request for confidentiality. Because the confidentiality request was granted in accordance with the agency's confidential business information regulation (49 CFR Part 512), the document has not been made publicly available.

○