AUTHENTICATED
U.S. GOVERNMENT
INFORMATION
GPO

110TH CONGRESS, 2d Session | SENATE | EXEC. REPT. 110–15

PROTOCOL AMENDING 1980 TAX CONVENTION WITH CANADA

SEPTEMBER 11, 2008.—Ordered to be printed

Mr. DODD, from the Committee on Foreign Relations, submitted the following

REPORT

[To accompany Treaty Doc. 110–15]

The Committee on Foreign Relations, to which was referred the Protocol Amending the Convention between the United States of America and Canada with Respect to Taxes on Income and on Capital done at Washington on September 26, 1980, as amended by the Protocols done on June 14, 1983, March 28, 1984, March 17, 1995, and July 29, 1997, signed on September 21, 2007, at Chelsea (the "Protocol") (Treaty Doc. 110–15), having considered the same, reports favorably thereon with one declaration and one condition, as indicated in the resolution of advice and consent, and recommends that the Senate give its advice and consent to ratification thereof, as set forth in this report and the accompanying resolution of advice and consent.

CONTENTS

		Page
I.	Purpose	1
II.	Background	2
III.	Major Provisions	2
IV.	Entry Into Force	6
V.	Implementing Legislation	6
VI.	Committee Action	6
VII.	Committee Recommendation and Comments	7
VIII.	Resolution of Advice and Consent to Ratification	10
IX.	Annex I.—Technical Explanation	13
X.	Annex II.—Treaty Hearing of July 10, 2008	89

I. PURPOSE

The purpose of the Protocol, along with the underlying treaty, is to promote and facilitate trade and investment between the United States and Canada. Principally, the Protocol would amend the existing tax treaty with Canada (the "Treaty") in order to eliminate withholding taxes on cross-border interest payments, coordinate

the tax treatment of contributions to, and other benefits of, pension funds for cross-border workers, and provide for mandatory arbitration of certain cases before the competent authorities of both countries.

II. BACKGROUND

The United States has a tax treaty with Canada that is currently in force, which was concluded in 1980. This Protocol is the fifth protocol to the 1980 Treaty; it has been the subject of negotiations for approximately ten years.[1] The Protocol was negotiated to address specific issues that have arisen in our tax treaty relations and changes in each country's domestic law and tax treaty policy.

III. MAJOR PROVISIONS

A detailed article-by-article analysis of the Protocol may be found in the Technical Explanation published by the Department of the Treasury on July 10, 2008, which is reprinted in Annex I. In addition, the staff of the Joint Committee on Taxation prepared an analysis of the Protocol, Document JCX–57–08 (July 8, 2008), which was of great assistance to the committee in reviewing the Protocol. A summary of the key provisions of the Protocol is set forth below.

1. Arbitration

Among the most important features of this new Protocol with Canada is a binding arbitration provision that would apply when the Canadian and U.S. competent authorities are unable to resolve a case in a timely fashion under the Mutual Agreement Procedure in the current tax treaty with Canada. *See* Article 21. This type of provision is a relatively recent innovation and has only been included in two other U.S. bilateral income tax treaties, both of which were approved by the Senate last year: a tax protocol with Germany and a tax treaty with Belgium.[2] The arbitration procedure is sometimes referred to as "last best offer" arbitration or "baseball arbitration"[3] because each of the competent authorities proposes one and only one figure for settlement and the arbitration board must select one of those figures as the award. The arbitration decision is binding on both countries if the decision is accepted by the taxpayer. The taxpayer,[4] however, has the right to reject the decision and access, for example, the relevant country's court system. *See* Article 21(7)(e).

2. Interest

The Protocol would eliminate withholding taxes on certain cross-border interest payments. *See* Article 6. This provision comes into effect with respect to interest paid to unrelated parties on the first

[1] The 1980 Canadian Tax Treaty has been amended by protocols done on June 14, 1983 (Treaty Doc. 98–7), March 28, 1984 (Treaty Doc. 98–22), March 17, 1995 (Treaty Doc. 104–4), and July 29, 1997 (Treaty Doc. 105–29).

[2] The arbitration mechanism in the Canada Protocol is most like the mechanism found in the Germany Tax Treaty, Treaty Doc. 109–20, which is similarly limited in its application to certain articles of the treaty.

[3] Referring to the arbitration method first introduced in the 1970 Collective Bargaining Agreement (CBA) of Major League Baseball and expanded in the 1973 CBA to include player salaries.

[4] A taxpayer is referred to as a "concerned person" in the treaty.

day of January of the year in which the proposed Protocol enters into force. The zero rate for interest paid to related persons would be phased in over a three-year period. *See* Article 27(3)(d).

3. Dual-Resident Corporations

The Protocol would address the issue of so-called "dual-resident corporations." It provides that if such a company is created under the laws in force in one treaty country but not under the laws in force in the other treaty country, the company is deemed to be a resident only of the first treaty country. *See* Article 2(1). If that rule is inapplicable, the Protocol generally provides that the competent authorities of the United States and Canada shall endeavor to reach agreement on the treatment of such companies for purposes of the treaty. In the absence of such agreement, the company is not considered to be a resident of either treaty country for purposes of its claiming any benefits under the treaty.

4. Permanent Establishment

In general, U.S. bilateral tax treaties attempt to ensure that a person or entity is not subject to undue and overly burdensome taxation in instances in which the taxpayer has minimal contacts with the taxing jurisdiction. This is accomplished in the Treaty through provisions under which the United States and Canada agree not to tax business income derived from sources within either country by residents of the other country unless the business activities in the taxing country are substantial enough to constitute a permanent establishment. *See* Article VII(1) of the Treaty. A permanent establishment is generally defined as "a fixed place of business through which the business of a resident of a Contracting State is wholly or partly carried on." *See* Article V(1) of the Canada Tax Treaty. Examples include a place of management, an office, branch, or factory. *See* Article V(2).

The Protocol, however, would amend Article V of the existing treaty with Canada and effectively expand the definition of a permanent establishment in a way that would affect enterprises that provide services. *See* Article 3. Specifically, an enterprise of one country would be deemed to have a permanent establishment in the other country if either (a) services are performed by an individual who is present in the other country for at least 183 days during any 12-month period and more than 50 percent of the enterprise's gross active business revenues during that time is income derived from those services or (b) the services are provided in the other country for at least 183 days during any 12-month period with respect to the same or a connected project for customers who are residents of that country or who have a permanent establishment there for which the services are provided. *See* Article 3(2). Thus, an enterprise that met either of these criteria would be deemed to have a permanent establishment in the treaty partner country, even if it did not have a fixed place of business in that country, and attributable business profits would be subject to tax by that country.

As noted in relation to the Bulgaria Convention in Executive Report 110–16, the United States has included similar provisions in some of its tax treaties with developing nations, but this would be the first time that such a provision would be included in a tax trea-

ty with a developed nation. The provision addresses an issue that has been the subject of litigation in Canada, and has the effect of reversing a case that effectively limited Canada's taxing authority's interpretation of "permanent establishment."[5]

This special rule presents a number of administrative and compliance challenges. For example, a number of the terms used in this rule, such as what constitutes "presence" or a "connected project" are ambiguous and require further clarification. In addition, when combined with Article XV of the Treaty, as amended by Article 10(2) of the Protocol, additional complexities arise. Article XV(1) of the Treaty, with certain exceptions, sets forth a general rule that if an employee who is a resident of one treaty country (the "residence country") is working in the other treaty country (the "employment country"), his or her salaries, wages, and other remuneration derived from the exercise of employment in that country may be taxed by that country (the employment country). Notwithstanding this general rule, Article XV(2) of the treaty provides that the remuneration derived by the employee from the exercise of employment in the employment country shall be taxed only by the residence country (and not the employment country) if (1) the employee's remuneration does not exceed $10,000; or (2) the employee is present in the employment country for 183 days or less in any 12-month period commencing or ending in the taxable year concerned; the remuneration is not paid by, or on behalf of, a person who is a resident of the employment country; and the remuneration is not "borne" by a permanent establishment in the employment country. It is this final requirement (that the remuneration must not be "borne" by a permanent establishment that the employer has in the employment country), which interacts with the special rule in Article 3(2) of the Protocol in a way that is likely to create problems for some taxpayers.

In other words, the salaries, wages, and other remuneration derived by an employee performing services through a permanent establishment arising under Article 3(2) of the Protocol would be subject, under Article XV of the Treaty to being taxed by the employment country, even if the other requirements of the exception in Article XV(2) had been met. Thus, the interaction of these two provisions increases the complexities associated with the special rule. For example, such a scenario would mean that an employer and the relevant employees would need to fulfill several tax-related obligations, including obtaining tax identification numbers and providing for the withholding of income taxes and other taxes as appropriate that would cover the period beginning on the first day such services were performed by such employee during the affected year, despite the fact that they may not know whether the enterprise will be deemed to have a permanent establishment under the treaty until perhaps 6 months into the relevant 12-month period, and will therefore be subject to various taxes, including employment taxes, by the employment country reaching back to the beginning of the relevant 12-month period.

[5] The provision effectively reverses the result of the Canadian Federal Court of Appeal decision in *The Queen* v. *Dudney,* 99 DTC 147 (T.C.C.C.), *aff'd,* 2000 DTC 6169 (F.C.A.), in which a U.S. independent contractor was held not to have a Canadian "fixed base" (which the court recognized to have substantially the same meaning as "permanent establishment"), even though the contractor spent substantial time at his customer's premises during the course of two consecutive calendar years.

Another aspect of the rule that would appear to be difficult to manage is that the 12-month period is not tied to a fiscal or calendar year. Also, it is necessary to determine whether customers in the employment country are residents or have a permanent establishment in that country. Some of the issues that may arise result from the fact that an enterprise with a deemed permanent establishment in another country that is not an actual fixed base is unlikely to have the infrastructure in that other country to do the things necessary to comply with the rules of the provision. For example, such an enterprise is unlikely to keep in the employment country a full set of financial records, or records tracking employees' activities there.

The committee asked the Treasury Department a number of questions regarding this provision in an attempt to gain greater insight about its operation. These questions and answers can be found in Annex II.

Fiscally Transparent and Hybrid Entities

Article 2(2) of the Protocol would amend Article IV of the existing treaty to include a new paragraph 6 and 7, setting forth specific rules for the treatment of certain income, profit, or gain derived through or paid by fiscally transparent entities. The new paragraph 6 would set forth a "positive" rule, which identifies scenarios in which "income, profit or gain shall be considered to be derived by a person who is a resident of a Contracting State." The new paragraph 7 would set forth a "negative" rule intended to prevent the use of such entities to claim the benefits where the investors are not subject to tax on the income in their state of residence. In particular, paragraph 7 is aimed largely at curtailing the use of certain legal entity structures that include hybrid fiscally transparent entities, which, when combined with the selective use of debt and equity, may facilitate the allowance of either (1) duplicated interest deductions in the United States and Canada, or (2) a single, internally generated, interest deduction in one country without offsetting interest income in the other country. As noted by the Joint Committee on Taxation in its explanation of the Protocol, commentators have raised a question as to whether subparagraph 7(b) is too broad, because it could prevent legitimate business structures that are not engaging in potentially abusive transactions from taking advantage of benefits that would otherwise be available to them under the treaty.

The Treasury Department, in response to questions from the committee, noted as follows regarding subparagraph 7(b):

> Subparagraph 7(b) essentially denies benefits in cases in which the residence country treats a payment differently than the source country and other conditions are met. The rule is broader than an analogous rule in Treasury regulations issued pursuant to section 894 of the Internal Revenue Code. The Treasury Department is aware that the scope of subparagraph 7(b) is potentially overbroad, especially in the case of non-deductible payments. The Treasury Department has been discussing, and will continue to discuss with Canada, whether to address this issue. The Treasury Department does not contemplate incorporating such a rule in future tax treaties.

Additional questions were asked by the committee of the Treasury Department regarding this provision. These questions and answers can be found in Annex II.

Pensions and Annuities

The Protocol would amend Article XVIII of the existing treaty, mainly to address certain individual retirement accounts and cross-border pension contributions and benefits accruals. Many of the new rules are similar to those found in the U.S. Model Tax Treaty, but several reflect the uniquely large cross-border flow of personal services between Canada and the United States, including a large number of cross-border commuters. These rules are intended to remove barriers to the flow of personal services between the two countries that could otherwise result from discontinuities under the laws of each country regarding the deductibility of pension contributions and the taxation of a pension plan's earnings and accretions in value. In addition, the Protocol would add a new provision to address the source of certain annuity or life insurance payments made by branches of insurance companies.

Limitation on Benefits

The Protocol would replace the Limitation on Benefits article in the existing treaty (Article XXIX A) with a new article that reflects the anti-treaty shopping provisions included in the U.S. Model treaty and more recent U.S. income tax treaties. The rules in the existing treaty are not reciprocal and can only be applied by the United States. The new rules are stronger and reciprocal.

Exchange of Information

The Protocol would replace Article XXVII of the existing treaty, which deals with the exchange of tax information, with an article on the same subject that is similar to what appears in the 2006 U.S. Model Tax Treaty. The new rules generally provide that the two competent authorities will exchange such information as may be relevant in carrying out the provisions of the domestic laws of the United States and Canada concerning taxes to which the treaty applies, to the extent the taxation under those laws is not contrary to the treaty.

IV. Entry Into Force

The United States and Canada shall notify each other in writing through diplomatic channels when their respective applicable procedures for the entry into force of this Protocol have been satisfied. This Protocol shall enter into force on the date of the later of these notifications. The various provisions of this Protocol will have effect as described in paragraphs 2 and 3 of Article 27.

V. Implementing Legislation

As is the case generally with income tax treaties, the Protocol is self-executing and does not require implementing legislation for the United States.

VI. Committee Action

The committee held a public hearing on the Protocol on July 10, 2008. Testimony was received from Mr. Michael Mundaca, Deputy Assistant Secretary (International), Office of Tax Policy, U.S. Department of the Treasury and Ms. Emily S. McMahon, Deputy

Chief of Staff to the Joint Committee on Taxation. A transcript of this hearing can be found in Annex II.

On July 29, 2008, the committee considered the Protocol and ordered it favorably reported by voice vote, with a quorum present and without objection.

VII. Committee Recommendation and Comments

The Committee on Foreign Relations believes that the Protocol will stimulate increased trade and investment, substantially deny treaty-shoppers the benefits of this tax treaty, and promote closer co-operation between the United States and Canada. The committee therefore urges the Senate to act promptly to give advice and consent to ratification of the Protocol, as set forth in this report and the accompanying resolution of advice and consent.

A. SPECIAL PERMANENT ESTABLISHMENT RULE FOR SERVICES

As discussed in Section III, the Protocol includes a special rule that would effectively expand the standard definition of a permanent establishment in a way that affects enterprises that provide services. This provision also appears in the Tax Convention with Bulgaria that is before the Senate, and presents a number of serious administrative and compliance challenges to service enterprises that may be subject to the rule.

The Treasury Department has made clear in testimony before the committee that the inclusion of this provision in the Convention and the Tax Protocol with Canada "does not reflect a change in U.S. tax treaty policy, and inclusion of such a provision in the U.S. Model is not being considered." The committee welcomes this statement and urges the Treasury Department to avoid including such a provision in future tax treaties, but particularly in treaties with developed nations for which there is no articulated rationale for its inclusion.

In addition, the Treasury Department indicated that there have been ongoing discussions with Canada "regarding the interpretation and application of the new rule concerning the taxation of services" and that "additional guidance with respect to the services rule included in both the proposed Protocol with Canada and the Convention with Bulgaria is needed to provide more certainty to taxpayers." In the committee's view, such discussions are crucial, particularly given the significant cross-border trade with Canada and the impact that such an unwieldy rule can have on businesses operating in both countries. The committee urges the Treasury Department to produce guidance on the rule's application, including ways in which enterprises might approach their compliance, as soon as is feasible and to keep the committee posted on its progress.

B. ARBITRATION

Report on Arbitration

The committee recognizes the potential value that the binding arbitration mechanism contained in the Protocol has with respect to the effective implementation and enforcement of the Tax Treaty with Canada and commends the Department's work in its development. Under the current treaty, disputes between the competent

authorities have gone unresolved for extended periods of time, burdening taxpayers and encumbering capital that could be put to more productive use. Delays in resolving disputes can also have the consequence of slowing payments by taxpayers, thereby depriving the U.S. Treasury of revenue. The inclusion of such a provision is, however, a new development in tax treaties and thus, the committee has included a reporting requirement in the resolution of advice and consent that is intended to help the committee determine whether the mechanism is functioning as anticipated and hoped.

The report required by the Resolution of advice and consent has two parts. The first part requires the Secretary of the Treasury to transmit to this committee, the Committee on Finance, and the Joint Committee on Taxation the texts of the rules of procedure that are ultimately developed and applicable to the arbitration boards established pursuant to the Canada, Germany, and Belgium tax treaties, including conflict of interest rules to be applied to members of the arbitration board. The second part requires specific data on the arbitrations conducted pursuant to the Canada, Germany, and Belgium tax treaties. This information, which will be provided by the Secretary of the Treasury on an annual basis for a total of six years, is designed to help the committee evaluate the operation of the mandatory arbitration mechanism set forth in the three tax treaties. Because this data is potentially subject to U.S. law that provides for the confidentiality of taxpayer returns and return information, the Resolution requires the report containing this data to be provided only to the Committee on Finance and to the Joint Committee on Taxation. The Resolution is itself intended to constitute a written request for taxpayer information in accordance with the requirements of 26 U.S.C. § 6103(f)(1), but as a matter of practice, the Treasury Department should advise the chairman of the Committee on Finance and the chairman of the Joint Committee on Taxation when the reporting requirement is initially triggered (60 days after a determination has been reached by an arbitration board in the tenth arbitration proceeding conducted pursuant to either this Protocol, the 2006 German Protocol, or the Belgium Convention) so that the chairmen can formalize the request in writing, in order to comply with taxpayer disclosure law. It is the committee's expectation that the report will help to inform the Joint Committee on Taxation's analysis of the operation of the arbitration mechanism, and that the analysis will then be shared with this committee in a manner consistent with U.S. taxpayer confidentiality law.

Should this committee determine that it has a need to view the data contained in the report itself, it may avail itself of the statutory mechanism under 26 U.S.C. § 6103(f)(3). It should also be understood that the committee and the Joint Committee on Taxation may request further information, beyond that included in the report, if it is needed to evaluate the arbitration mechanism.

Comments on Arbitration for the Future

The committee made a number of comments regarding issues that might be addressed in future arbitration provisions by the Treasury Department in the committee's Executive Report on the Protocol Amending the Tax Convention with Germany, which are

equally relevant to the arbitration mechanism in this Protocol.[6] In particular, the committee offered specific comments regarding 1) Taxpayer Input; 2) Treaty Interpretation; and 3) the Selection of Arbiters.

In response to committee questions regarding why these comments were not reflected in this Protocol, the Treasury Department testified that the arbitration provision in the Protocol with Canada had already been negotiated at the time the committee provided its comments to the Department and thus, it was not possible to take them into account in this Protocol. The Treasury Department further indicated that "the committee's concerns have been and will continue to be considered in any arbitration negotiations the Treasury Department conducts." The committee expects that the next treaty with a mandatory arbitration mechanism will address the committee's comments and concerns.

C. FISCALLY TRANSPARENT AND HYBRID ENTITY PROVISIONS

As noted in Section III above, Article 2(2) of the Protocol would amend Article IV of the existing treaty to include a new paragraph 6 and 7, setting forth specific rules for the treatment of certain income, profit, or gain derived through or paid by fiscally transparent entities. The new paragraph 7 is intended to prevent the use of fiscally transparent entities to claim the benefits when the investors are not subject to tax on the income in their state of residence. As discussed above and described at length in questions for the record included in Annex II, the scope of paragraph 7(b) is potentially overbroad, especially in the case of non-deductible payments, so that in some circumstances a legitimate business structure that is not engaging in potentially abusive transactions would be prevented from taking advantage of benefits that should be available to them under the treaty. The Treasury Department noted in testimony before the committee that it "has been discussing, and will continue to discuss with Canada, whether to address this issue. The Treasury Department does not contemplate incorporating such a rule in future tax treaties." The committee welcomes this statement and urges the Treasury Department to address this issue with Canada as soon as possible.

D. DUAL-RESIDENT CORPORATIONS

As noted in Section III above, the Protocol would address the issue of so-called "dual-resident corporations" by providing that if such a company is created under the laws in force in one treaty country but not under the laws in force in the other treaty country, the company is deemed to be a resident only of the first treaty country. *See* Article 2(1). If that rule is inapplicable, the Protocol generally provides that the competent authorities of the United States and Canada shall endeavor to reach agreement on the treatment of such companies for purposes of the treaty. In the absence of such agreement, the company is not considered to be a resident of either treaty country for purposes of its claiming any benefits under the treaty.

The committee recognizes that the new rule is likely to be helpful in addressing abuse of the existing treaty by certain companies.

[6] *See* Exec. Rept. 110–5 at pp. 7–9.

Nevertheless, the rule appears to have some drawbacks. For example, application of the dual-residency rule in the Protocol would not be equitable with respect to a corporation that was organized under the laws of the United States many years ago and has long since ceased to have significant contacts with the United States, but instead is managed and controlled in Canada. In response to questions from the committee on this point, the Treasury Department noted that it "[i]t has been a longstanding treaty policy of the United States to place significant weight on the place of incorporation when addressing questions of dual corporate residence. However, we have included in other agreements, for example in our agreement with the United Kingdom and the proposed Bulgaria and Iceland agreements, provisions directing the Competent Authorities to endeavor to determine for treaty purposes the residence of dual resident corporations." The committee supports the Treasury Department's efforts to cut down on treaty abuse, but recommends that when including such a rule in future, the Competent Authorities be afforded the discretion to override a strict application of the rule when the result would be inequitable.

E. RESOLUTION

The committee has included in the resolutions of advice and consent one condition, which is a report on the arbitration mechanism in the Protocol and in the Belgium and German Tax treaties, which is discussed above, and one declaration, which is the same for each treaty and is discussed below.

Declaration

The committee has included a proposed declaration, which states that the Protocol is self-executing, as is the case generally with income tax treaties. The committee has in the past included such a statement in the committee's report, but in light of the recent Supreme Court decision, *Medellín* v. *Texas,* 128 S. Ct. 1346 (2008), the committee has determined that a clear statement in the Resolution is warranted. A further discussion of the committee's views on this matter can be found in Section VIII of Executive Report 110–12.

VIII. Resolution of Advice and Consent to Ratification

Resolved (two-thirds of the Senators present concurring therein),

SECTION 1. SENATE ADVICE AND CONSENT SUBJECT TO A DECLARATION AND A CONDITION

The Senate advises and consents to the ratification of the Protocol Amending the Convention between the United States of America and Canada with Respect to Taxes on Income and on Capital done at Washington on September 26, 1980, as Amended by the Protocols done on June 14, 1983, March 28, 1984, March 17, 1995, and July 29, 1997, signed on September 21, 2007, at Chelsea (the "Protocol") (Treaty Doc. 110–15), subject to the declaration of section 2 and the condition of section 3.

SECTION 2. DECLARATION

The advice and consent of the Senate under section 1 is subject to the following declaration:

This Convention is self-executing.

SECTION 3. CONDITION

The advice and consent of the Senate under section 1 is subject to the following condition:

Report.

1. Not later than two years from the date on which this Protocol enters into force and prior to the first arbitration conducted pursuant to the binding arbitration mechanism provided for in this Protocol, the Secretary of Treasury shall transmit the text of the rules of procedure applicable to arbitration boards, including conflict of interest rules to be applied to members of the arbitration board, to the committees on Finance and Foreign Relations of the Senate and the Joint Committee on Taxation.

The Secretary of Treasury shall also, prior to the first arbitration conducted pursuant to the binding arbitration mechanism provided for in the 2006 Protocol Amending the Convention between the United States of America and the Federal Republic of Germany for the Avoidance of Double Taxation and the Prevention of Fiscal Evasion with Respect to Taxes on Income and Capital and to Certain Other Taxes (the "2006 German Protocol") (Treaty Doc. 109–20) and the Convention between the Government of the United States of America and the Government of the Kingdom of Belgium for the Avoidance of Double Taxation and the Prevention of Fiscal Evasion with Respect to Taxes on Income, and accompanying protocol (the "Belgium Convention") (Treaty Doc. 110–3), transmit the text of the rules of procedure applicable to the first arbitration board agreed to under each treaty to the committees on Finance and Foreign Relations of the Senate and the Joint Committee on Taxation.

2. 60 days after a determination has been reached by an arbitration board in the tenth arbitration proceeding conducted pursuant to either this Protocol, the 2006 German Protocol, or the Belgium Convention, the Secretary of Treasury shall prepare and submit a detailed report to the Joint Committee on Taxation and the Committee on Finance of the Senate, subject to law relating to taxpayer confidentiality, regarding the operation and application of the arbitration mechanism contained in the aforementioned treaties. The report shall include the following information:

I. The aggregate number, for each treaty, of cases pending on the respective dates of entry into force of this Protocol, the 2006 German Protocol, or the Belgium Convention, along with the following additional information regarding these cases:

a. The number of such cases by treaty article(s) at issue;

b. The number of such cases that have been resolved by the competent authorities through a mutual agreement as of the date of the report; and

c. The number of such cases for which arbitration proceedings have commenced as of the date of the report.

II. A list of every case presented to the competent authorities after the entry into force of this Protocol, the 2006 German Protocol, or the Belgium Convention, with the following information regarding each and every case:

a. The commencement date of the case for purposes of determining when arbitration is available;

b. Whether the adjustment triggering the case, if any, was made by the United States or the relevant treaty partner and which competent authority initiated the case;

c. Which treaty the case relates to;

d. The treaty article(s) at issue in the case;

e. The date the case was resolved by the competent authorities through a mutual agreement, if so resolved;

f. The date on which an arbitration proceeding commenced, if an arbitration proceeding commenced; and

g. The date on which a determination was reached by the arbitration board, if a determination was reached, and an indication as to whether the board found in favor of the United States or the relevant treaty partner.

III. With respect to each dispute submitted to arbitration and for which a determination was reached by the arbitration board pursuant to this Protocol, the 2006 German Protocol, or the Belgium Convention, the following information shall be included:

a. An indication as to whether the determination of the arbitration board was accepted by each concerned person;

b. The amount of income, expense, or taxation at issue in the case as determined by reference to the filings that were sufficient to set the commencement date of the case for purposes of determining when arbitration is available; and

c. The proposed resolutions (income, expense, or taxation) submitted by each competent authority to the arbitration board.

3. The Secretary of Treasury shall, in addition, prepare and submit the detailed report described in paragraph (2) on March 1 of the year following the year in which the first report is submitted to the Joint Committee on Taxation and the Committee on Finance of the Senate, and on an annual basis thereafter for a period of five years. In each such report, disputes that were resolved, either by a mutual agreement between the relevant competent authorities or by a determination of an arbitration board, and noted as such in prior reports may be omitted.

IX. ANNEX I.—TECHNICAL EXPLANATION

TECHNICAL EXPLANATION OF THE PROTOCOL DONE AT CHELSEA ON SEPTEMBER 21, 2007 AMENDING THE CONVENTION BETWEEN THE UNITED STATES OF AMERICA AND CANADA WITH RESPECT TO TAXES ON INCOME AND ON CAPITAL DONE AT WASHINGTON ON SEPTEMBER 26, 1980, AS AMENDED BY THE PROTOCOLS DONE ON JUNE 14, 1983, MARCH 28, 1994, MARCH 17, 1995, AND JULY 29, 1997

INTRODUCTION

This is a Technical Explanation of the Protocol signed at Chelsea on September 21, 2007 (the "Protocol"), amending the Convention between the United States of America and Canada with Respect to Taxes on Income and on Capital done at Washington on September 26, 1980, as amended by the Protocols done on June 14, 1983, March 28, 1994, March 17, 1995, and July 29, 1997 (the "existing Convention"). The existing Convention as modified by the Protocol shall be referred to as the "Convention."

Negotiation of the Protocol took into account the U.S. Treasury Department's current tax treaty policy and the Treasury Department's Model Income Tax Convention, published on November 15, 2006 (the "U.S. Model"). Negotiations also took into account the Model Tax Convention on Income and on Capital, published by the Organisation for Economic Cooperation and Development (the "OECD Model"), and recent tax treaties concluded by both countries.

The Technical Explanation is an official United States guide to the Protocol. The Government of Canada has reviewed this document and subscribes to its contents. In the view of both governments, this document accurately reflects the policies behind particular Protocol provisions, as well as understandings reached with respect to the application and interpretation of the Protocol and the Convention.

References made to the "existing Convention" are intended to put various provisions of the Protocol into context. The Technical Explanation does not, however, provide a complete comparison between the provisions of the existing Convention and the amendments made by the Protocol. The Technical Explanation is not intended to provide a complete guide to the existing Convention as amended by the Protocol. To the extent that the existing Convention has not been amended by the Protocol, the prior technical explanations of the Convention remain the official explanations. References in this Technical Explanation to "he" or "his" should be read to mean "he or she" or "his or her." References to the "Code" are to the Internal Revenue Code.

On the date of signing of the Protocol, the United States and Canada exchanged two sets of diplomatic notes. Each of these notes sets forth provisions and understandings related to the Protocol and the Convention, and comprises an integral part of the overall agreement between the United States and Canada. The first note, the "Arbitration Note," relates to the implementation of new paragraphs 6 and 7 of Article XXVI (Mutual Agreement Procedure), which provide for binding arbitration of certain disputes between the competent authorities. The second note, the "General Note," re-

lates more generally to issues of interpretation or application of various provisions of the Protocol.

ARTICLE 1

Article 1 of the Protocol adds subparagraph 1(k) to Article III (General Definitions) to address the definition of "national" of a Contracting State as used in the Convention. The Contracting States recognize that Canadian tax law does not draw distinctions based on nationality as such. Nevertheless, at the request of the United States, the definition was added and contains references to both citizenship and nationality. The definition includes any individual possessing the citizenship or nationality of a Contracting State and any legal person, partnership or association whose status is determined by reference to the laws in force in a Contracting State. The existing Convention contains one reference to the term "national" in paragraph 1 of Article XXVI (Mutual Agreement Procedure). The Protocol adds another reference in paragraph 1 of Article XXV (Non-Discrimination) to ensure that nationals of the United States are covered by the non-discrimination provisions of the Convention. The definition added by the Protocol is consistent with the definition provided in other U.S. tax treaties.

The General Note provides that for purposes of paragraph 2 of Article III, as regards the application at any time of the Convention, any term not defined in the Convention shall, unless the context otherwise requires or the competent authorities otherwise agree to a common meaning pursuant to Article XXVI (Mutual Agreement Procedure), have the meaning which it has at that time under the law of that State for the purposes of the taxes to which the Convention apply, any meaning under the applicable tax laws of that State prevailing over a meaning given to the term under other laws of that State.

ARTICLE 2

Article 2 of the Protocol replaces paragraph 3 of Article IV (Residence) of the existing Convention to address the treatment of so-called dual resident companies. Article 2 of the Protocol also adds new paragraphs 6 and 7 to Article IV to determine whether income is considered to be derived by a resident of a Contracting State when such income is derived through a fiscally transparent entity.

Paragraph 3 of Article IV—Dual resident companies

Paragraph 3, which addresses companies that are otherwise considered resident in each of the Contracting States, is replaced. The provisions of paragraph 3, and the date upon which these provisions are effective, are consistent with an understanding reached between the United States and Canada on September 18, 2000, to clarify the residence of a company under the Convention when the company has engaged in a so-called corporate "continuance" transaction. The paragraph applies only where, by reason of the rules set forth in paragraph 1 of Article IV (Residence), a company is a resident of both Contracting States.

Subparagraph 3(a) provides a rule to address the situation when a company is a resident of both Contracting States but is created under the laws in force in only one of the Contracting States. In

such a case, the rule provides that the company is a resident only of the Contracting State under which it is created. For example, if a company is incorporated in the United States but the company is also otherwise considered a resident of Canada because the company is managed in Canada, subparagraph 3(a) provides that the company shall be considered a resident only of the United States for purposes of the Convention. Subparagraph 3(a) is intended to operate in a manner similar to the first sentence of former paragraph 3. However, subparagraph 3(a) clarifies that such a company must be considered created in only one of the Contracting States to fall within the scope of subparagraph 3(a). In some cases, a company may engage in a corporate continuance transaction and retain its charter in the Contracting State from which it continued, while also being considered as created in the State to which the company continued. In such cases, the provisions of subparagraph 3(a) shall not apply because the company would be considered created in both of the Contracting States.

Subparagraph 3(b) addresses all cases involving a dual resident company that are not addressed in subparagraph 3(a). Thus, subparagraph 3(b) applies to continuance transactions occurring between the Contracting States if, as a result, a company otherwise would be considered created under the laws of each Contracting State, e.g., because the corporation retained its charter in the first State. Subparagraph 3(b) would also address so-called serial continuance transactions where, for example, a company continues from one of the Contracting States to a third country and then continues into the other Contracting State without having ceased to be treated as resident in the first Contracting State.

Subparagraph 3(b) provides that if a company is considered to be a resident of both Contracting States, and the residence of such company is not resolved by subparagraph 3(a), then the competent authorities of the Contracting States shall endeavor to settle the question of residency by a mutual agreement procedure and determine the mode of application of the Convention to such company. Subparagraph 3(b) also provides that in the absence of such agreement, the company shall not be considered a resident of either Contracting State for purposes of claiming any benefits under the Convention.

Paragraphs 6 and 7 of Article IV—income, profit, or gain derived through fiscally transparent entities

New paragraphs 6 and 7 are added to Article IV to provide specific rules for the treatment of amounts of income, profit or gain derived through or paid by fiscally transparent entities such as partnerships and certain trusts. Fiscally transparent entities, as explained more fully below, are in general entities the income of which is taxed at the beneficiary, member, or participant level. Entities that are subject to tax, but with respect to which tax may be relieved under an integrated system, are not considered fiscally transparent entities. Entities that are fiscally transparent for U.S. tax purposes include partnerships, common investment trusts under section 584, grantor trusts, and business entities such as a limited liability company ("LLC") that is treated as a partnership or is disregarded as an entity separate from its owner for U.S. tax

purposes. Entities falling within this description in Canada are (except to the extent the law provides otherwise) partnerships and what are known as "bare" trusts.

United States tax law also considers a corporation that has made a valid election to be taxed under Subchapter S of Chapter 1 of the Internal Revenue Code (an "S corporation") to be fiscally transparent within the meaning explained below. Thus, if a U.S. resident derives income from Canada through an S corporation, the U.S. resident will under new paragraph 6 be considered for purposes of the Convention as the person who derived the income. Exceptionally, because Canada will ordinarily accept that an S corporation is itself resident in the United States for purposes of the Convention, Canada will allow benefits under the Convention to the S corporation in its own right. In a reverse case, however—that is, where the S corporation is owned by a resident of Canada and has U. S.-source income, profits or gains—the Canadian resident will not be considered as deriving the income by virtue of subparagraph 7 (a) as Canada does not see the S corporation as fiscally transparent.

Under both paragraph 6 and paragraph 7, it is relevant whether the treatment of an amount of income, profit or gain derived by a person through an entity under the tax law of the residence State is "the same as its treatment would be if that amount had been derived directly." For purposes of paragraphs 6 and 7, whether the treatment of an amount derived by a person through an entity under the tax law of the residence State is the same as its treatment would be if that amount had been derived directly by that person shall be determined in accordance with the principles set forth in Code section 894 and the regulations under that section concerning whether an entity will be treated as fiscally transparent with respect to an item of income received by the entity. Treas. Reg. section 1.894–1(d)(3)(iii) provides that an entity will be fiscally transparent under the laws of an interest holder's jurisdiction with respect to an item of income to the extent that the laws of that jurisdiction require the interest holder resident in that jurisdiction to separately take into account on a current basis the interest holder's respective share of the item of income paid to the entity, whether or not distributed to the interest holder, and the character and source of the item in the hands of the interest holder are determined as if such item were realized directly from the source from which realized by the entity. Although Canada does not have analogous provisions in its domestic law, it is anticipated that principles comparable to those described above will apply.

Paragraph 6

Under paragraph 6, an amount of income, profit or gain is considered to be derived by a resident of a Contracting State (residence State) if 1) the amount is derived by that person through an entity (other than an entity that is a resident of the other Contracting State (source State), and 2) by reason of that entity being considered fiscally transparent under the laws of the residence State, the treatment of the amount under the tax law of the residence State is the same as its treatment would be if that amount

had been derived directly by that person. These two requirements are set forth in subparagraphs 6(a) and 6(b), respectively.

For example, if a U.S. resident owns a French entity that earns Canadian-source dividends and the entity is considered fiscally transparent under U.S. tax law, the U.S. resident is considered to derive the Canadian-source dividends for purposes of Article IV (and thus, the dividends are considered as being "paid to" the resident) because the U.S. resident is considered under the tax law of the United States to have derived the dividend through the French entity and, because the entity is treated as fiscally transparent under U.S. tax law, the treatment of the income under U.S. tax law is the same as its treatment would be if that amount had been derived directly by the U.S. resident. This result obtains even if the French entity is viewed differently under the tax laws of Canada or of France (i.e., the French entity is treated under Canadian law or under French tax law as not fiscally transparent).

Similarly, if a Canadian resident derives U. S.-source income, profit or gain through an entity created under Canadian law that is considered a partnership for Canadian tax purposes but a corporation for U.S. tax purposes, U. S.-source income, profit or gain derived through such entity by the Canadian resident will be considered to be derived by the Canadian resident in considering the application of the Convention.

Application of paragraph 6 and related treaty provisions by Canada

In determining the entitlement of a resident of the United States to the benefits of the Convention, Canada shall apply the Convention within its own legal framework.

For example, assume that from the perspective of Canadian law an amount of income is seen as being paid from a source in Canada to USLLC, an entity that is entirely owned by U.S. persons and is fiscally transparent for U.S. tax purposes, but that Canada considers a corporation and, thus, under Canadian law, a taxpayer in its own right. Since USLLC is not itself taxable in the United States, it is not considered to be a U.S. resident under the Convention; but for new paragraph 6 Canada would not apply the Convention in taxing the income.

If new paragraph 6 applies in respect of an amount of income, profit or gain, such amount is considered as having been derived by one or more U.S. resident shareholders of USLLC, and Canada shall grant benefits of the Convention to the payment to USLLC and eliminate or reduce Canadian tax as provided in the Convention. The effect of the rule is to suppress Canadian taxation of USLLC to give effect to the benefits available under the Convention to the U.S. residents in respect of the particular amount of income, profit or gain.

However, for Canadian tax purposes, USLLC remains the only "visible" taxpayer in relation to this amount. In other words, the Canadian tax treatment of this taxpayer (USLLC) is modified because of the entitlement of its U.S. resident shareholders to benefits under the Convention, but this does not alter USLLC's status under Canadian law. Canada does not, for example, treat USLLC as though it did not exist, substituting the shareholders for it in the role of taxpayer under Canada's system.

Some of the implications of this are as follows. First, Canada will not require the shareholders of USLLC to file Canadian tax returns in respect of income that benefits from new paragraph 6. Instead, USLLC itself will file a Canadian tax return in which it will claim the benefit of the paragraph and supply any documentation required to support the claim. (The Canada Revenue Agency will supply additional practical guidance in this regard, including instructions for seeking to establish entitlement to Convention benefits in advance of payment.) Second, as is explained in greater detail below, if the income in question is business profits, it will be necessary to determine whether the income was earned through a permanent establishment in Canada. This determination will be based on the presence and activities in Canada of USLLC itself, not of its shareholders acting in their own right.

Determination of the existence of a permanent establishment from the business activities of a fiscally transparent entity

New paragraph 6 applies not only in respect of amounts of dividends, interest and royalties, but also profit (business income), gains and other income. It may thus be relevant in cases where a resident of one Contracting State carries on business in the other State through an entity that has a different characterization in each of the two Contracting States.

Application of new paragraph 6 and the provisions of Article V (Permanent Establishment) by CanadaAssume, for instance, that a resident of the United States is part owner of a U.S. limited liability company (USLLC) that is treated in the United States as a fiscally transparent entity, but in Canada as a corporation. Assume one of the other two shareholders of USLLC is resident in a country that does not have a tax treaty with Canada and that the remaining shareholder is resident in a country with which Canada does have a tax treaty, but that the treaty does not include a provision analogous to paragraph 6.

Assume further that USLLC carries on business in Canada, but does not do so through a permanent establishment there. (Note that from the Canadian perspective, the presence or absence of a permanent establishment is evaluated with respect to USLLC only, which Canada sees as a potentially taxable entity in its own right.) Regarding Canada's application of the provisions of the Convention, the portion of USLLC's profits that belongs to the U.S. resident shareholder will not be taxable in Canada, provided that the U.S. resident meets the Convention's limitation on benefits provisions. Under paragraph 6, that portion is seen as having been derived by the U.S. resident shareholder, who is entitled to rely on Article VII (Business Profits). The balance of USLLC's profits will, however, remain taxable in Canada. Since USLLC is not itself resident in the United States for purposes of the Convention, in respect of that portion of its profits that is not considered to have been derived by a U.S. resident (or a resident of another country whose treaty with Canada includes a rule comparable to paragraph 6) it is not relevant whether or not it has a permanent establishment in Canada.

Another example would be the situation where a USLLC that is wholly owned by a resident of the U.S. carries on business in Canada through a permanent establishment. If the USLLC is fiscally

transparent for U.S. tax purposes (and therefore, the conditions for the application of paragraph 6 are satisfied) then the USLLC's profits will be treated as having been derived by its U.S. resident owner inclusive of all attributes of that income (e.g., such as having been earned through a permanent establishment). However, since the USLLC remains the only "visible" taxpayer for Canadian tax purposes, it is the USLLC, and not the U.S. shareholder, that is subject to tax on the profits that are attributable to the permanent establishment.

Application of new paragraph 6 and the provisions of Article V (Permanent Establishment) by the United States

It should be noted that in the situation where a person is considered to derive income through an entity, the United States looks in addition to such person's activities in order to determine whether he has a permanent establishment. Assume that a Canadian resident and a resident in a country that does not have a tax treaty with the United States are owners of CanLP. Assume further that Can LP is an entity that is considered fiscally transparent for Canadian tax purposes but is not considered fiscally transparent for U.S. tax purposes, and that CanLP carries on business in the United States. If CanLP carries on the business through a permanent establishment, that permanent establishment may be attributed to the partners. Moreover, in determining whether there is a permanent establishment, the activities of both the entity and its partners will be considered. If CanLP does not carry on the business through a permanent establishment, the Canadian resident, who derives income through the partnership, may claim the benefits of Article VII (Business Profits) of the Convention with respect to such income, assuming that the income is not otherwise attributable to a permanent establishment of the partner. In any case, the third country partner cannot claim the benefits of Article VII of the Convention between the United States and Canada.

Paragraph 7

Paragraph 7 addresses situations where an item of income, profit or gain is considered not to be paid to or derived by a person who is a resident of a Contracting State. The paragraph is divided into two subparagraphs.

Under subparagraph 7(a), an amount of income, profit or gain is considered not to be paid to or derived by a person who is a resident of a Contracting State (the residence State) if (1) the other Contracting State (the source State) views the person as deriving the amount through an entity that is not a resident of the residence State, and (2) by reason of the entity not being treated as fiscally transparent under the laws of the residence State, the treatment of the amount under the tax law of the residence State is not the same as its treatment would be if that amount had been derived directly by the person.

For example, assume USCo, a company resident in the United States, is a part owner of CanLP, an entity that is considered fiscally transparent for Canadian tax purposes, but is not considered fiscally transparent for U.S. tax purposes. CanLP receives a dividend from a Canadian company in which it owns stock. Under Ca-

nadian tax law USCo is viewed as deriving a Canadian-source dividend through CanLP. For U.S. tax purposes, CanLP, and not USCo, is viewed as deriving the dividend. Because the treatment of the dividend under U.S. tax law in this case is not the same as the treatment under U.S. law if USCo derived the dividend directly, subparagraph 7(a) provides that USCo will not be considered as having derived the dividend. The result would be the same if CanLP were a third-country entity that was viewed by the United States as not fiscally transparent, but was viewed by Canada as fiscally transparent. Similarly, income from U.S. sources received by an entity organized under the laws of the United States that is treated for Canadian tax purposes as a corporation and is owned by shareholders who are residents of Canada is not considered derived by the shareholders of that U.S. entity even if, under U.S. tax law, the entity is treated as fiscally transparent.

Subparagraph 7(b) provides that an amount of income, profit or gain is not considered to be paid to or derived by a person who is a resident of a Contracting State (the residence State) where the person is considered under the tax law of the other Contracting State (the source State) to have received the amount from an entity that is a resident of that other State (the source State), but by reason of the entity being treated as fiscally transparent under the laws of the Contracting State of which the person is resident (the residence State), the treatment of such amount under the tax law of that State (the residence State) is not the same as the treatment would be if that entity were not treated as fiscally transparent under the laws of that State (the residence State).

That is, under subparagraph 7(b), an amount of income, profit or gain is not considered to be paid to or derived by a resident of a Contracting State (the residence State) if: (1) the other Contracting State (the source State) views such person as receiving the amount from an entity resident in the source State; (2) the entity is viewed as fiscally transparent under the laws of the residence State; and (3) by reason of the entity being treated as fiscally transparent under the laws of the residence State, the treatment of the amount received by that person under the tax law of the residence State is not the same as its treatment would be if the entity were not treated as fiscally transparent under the laws of the residence State.

For example, assume that USCo, a company resident in the United States is the sole owner of CanCo, an entity that is considered under Canadian tax law to be a corporation that is resident in Canada but is considered under U.S. tax law to be disregarded as an entity separate from its owner. Assume further that USCo is considered under Canadian tax law to have received a dividend from CanCo.

In such a case, Canada, the source State, views USCo as receiving income (i.e., a dividend) from a corporation that is a resident of Canada (CanCo), CanCo is viewed as fiscally transparent under the laws of the United States, the residence State, and by reason of CanCo being disregarded under U.S. tax law, the treatment under U.S. tax law of the payment is not the same as its treatment would be if the entity were regarded as a corporation under U.S. tax law. That is, the payment is disregarded for U.S. tax purposes,

whereas if U.S. tax law regarded CanCo as a corporation, the payment would be treated as a dividend. Therefore, subparagraph 7(b) would apply to provide that the income is not considered to be paid to or derived by USCo.

The same result obtains if, in the above example, USCo is considered under Canadian tax law to have received an interest or royalty payment (instead of a dividend) from CanCo. Under U.S. law, because CanCo is disregarded as an entity separate from its owner, the payment is disregarded, whereas if CanCo were treated as not fiscally transparent, the payment would be treated as interest or a royalty, as the case may be. Therefore, subparagraph 7(b) would apply to provide that such amount is not considered to be paid to or derived by USCo.

The application of subparagraph 7(b) differs if, in the above example, USCo (as well as other persons) are owners of CanCo, a Canadian entity that is considered under Canadian tax law to be a corporation that is resident in Canada but is considered under U.S. tax law to be a partnership (as opposed to being disregarded). Assume that USCo is considered under Canadian tax law to have received a dividend from CanCo. Such payment is viewed under Canadian tax law as a dividend, but under U.S. tax law is viewed as a partnership distribution. In such a case, Canada views USCo as receiving income (i.e., a dividend) from an entity that is a resident of Canada (CanCo), CanCo is viewed as fiscally transparent under the laws of the United States, the residence State, and by reason of CanCo being treated as a partnership under U.S. tax law, the treatment under U.S. tax law of the payment (as a partnership distribution) is not the same as the treatment would be if CanCo were not fiscally transparent under U.S. tax law (as a dividend). As a result, subparagraph 7(b) would apply to provide that such amount is not considered paid to or derived by the U.S. resident.

As another example, assume that CanCo, a company resident in Canada, is the owner of USLP, an entity that is considered under U.S. tax law (by virtue of an election) to be a corporation resident in the United States, but that is considered under Canadian tax law to be a branch of CanCo. Assume further that CanCo is considered under U.S. tax law to have received a dividend from USLP. In this case, the United States views CanCo as receiving income (i.e., a dividend) from an entity that is resident in the United States (USLP), but by reason of USLP being a branch under Canadian tax law, the treatment under Canadian tax law of the payment is not the same as its treatment would be if USLP were a company under Canadian tax law. That is, the payment is treated as a branch remittance for Canadian tax purposes, whereas if Canadian tax law regarded USLP as a corporation, the payment would be treated as a dividend. Therefore, subparagraph 7(b) would apply to provide that the income is not considered to be paid to or derived by CanCo. The same result would obtain in the case of interest or royalties paid by USLP to CanCo.

Paragraphs 6 and 7 apply to determine whether an amount is considered to be derived by (or paid to) a person who is a resident of Canada or the United States. If, as a result of paragraph 7, a person is not considered to have derived or received an amount of income, profit or gain, that person shall not be entitled to the bene-

fits of the Convention with respect to such amount. Additionally, for purposes of application of the Convention by the United States, the treatment of such payments under Code section 894(c) and the regulations thereunder would not be relevant.

New paragraphs 6 and 7 are not an exception to the saving clause of paragraph 2 of Article XXIX (Miscellaneous Rules). Accordingly, subparagraph 7(b) does not prevent a Contracting State from taxing an entity that is treated as a resident of that State under its tax law. For example, if a U.S. partnership with members who are residents of Canada elects to be taxed as a corporation for U.S. tax purposes, the United States will tax that partnership on its worldwide income on a net basis, even if Canada views the partnership as fiscally transparent.

Interaction of paragraphs 6 and 7 with the determination of "beneficial ownership"

With respect to payments of income, profits or gain arising in a Contracting State and derived directly by a resident of the other Contracting State (and not through a fiscally transparent entity), the term "beneficial owner" is defined under the internal law of the country imposing tax (i.e., the source State). Thus, if the payment arising in a Contracting State is derived by a resident of the other State who under the laws of the first-mentioned State is determined to be a nominee or agent acting on behalf of a person that is not a resident of that other State, the payment will not be entitled to the benefits of the Convention. However, payments arising in a Contracting State and derived by a nominee on behalf of a resident of that other State would be entitled to benefits. These limitations are confirmed by paragraph 12 of the Commentary to Article 10 of the OECD Model.

Special rules apply in the case of income, profits or gains derived through a fiscally transparent entity, as described in new paragraph 6 of Article IV. Residence State principles determine who derives the income, profits or gains, to assure that the income, profits or gains for which the source State grants benefits of the Convention will be taken into account for tax purposes by a resident of the residence State. Source country principles of beneficial ownership apply to determine whether the person who derives the income, profits or gains, or another resident of the other Contracting State, is the beneficial owner of the income, profits or gains. The source State may conclude that the person who derives the income, profits or gains in the residence State is a mere nominee, agent, conduit, etc., for a third country resident and deny benefits of the Convention. If the person who derives the income, profits or gains under paragraph 6 of Article IV would not be treated under the source State's principles for determining beneficial ownership as a nominee, agent, custodian, conduit, etc., that person will be treated as the beneficial owner of the income, profits or gains for purposes of the Convention.

Assume, for instance, that interest arising in the United States is paid to CanLP, an entity established in Canada which is treated as fiscally transparent for Canadian tax purposes but is treated as a company for U.S. tax purposes. CanCo, a company incorporated in Canada, is the sole interest holder in CanLP. Paragraph 6 of Ar-

ticle IV provides that CanCo derives the interest. However, if under the laws of the United States regarding payments to nominees, agents, custodians and conduits, CanCo is found be a nominee, agent, custodian or conduit for a person who is not a resident of Canada, CanCo will not be considered the beneficial owner of the interest and will not be entitled to the benefits of Article XI with respect to such interest. The payment may be entitled to benefits, however, if CanCo is found to be a nominee, agent, custodian or conduit for a person who is a resident of Canada.

With respect to Canadian-source income, profit or gains, beneficial ownership is to be determined under Canadian law. For example, assume that LLC, an entity that is treated as fiscally transparent for U.S. tax purposes, but as a corporation for Canadian tax purposes, is owned by USCo, a U.S. resident company. LLC receives Canadian-source income. The question of the beneficial ownership of the income received by LLC is determined under Canadian law. If LLC is considered the beneficial owner of the income under Canadian law, paragraph 6 shall apply to extend benefits of the Convention to the income received by LLC to the extent that the Canadian-source income is derived by U.S. resident members of LLC.

ARTICLE 3

Article 3 of the Protocol amends Article V (Permanent Establishment) of the Convention. Paragraph 1 of Article 3 of the Protocol adds a reference in Paragraph 6 of Article IV to new paragraph 9 of Article V. Paragraph 2 of Article 3 of the Protocol sets forth new paragraphs 9 and 10 of Article V.

Paragraph 9 of Article V

New paragraph 9 provides a special rule (subject to the provisions of paragraph 3) for an enterprise of a Contracting State that provides services in the other Contracting State, but that does not have a permanent establishment by virtue of the preceding paragraphs of the Article. If (and only if) such an enterprise meets either of two tests as provided in subparagraphs 9(a) and 9(b), the enterprise will be deemed to provide those services through a permanent establishment in the other State.

The first test as provided in subparagraph 9(a) has two parts. First, the services must be performed in the other State by an individual who is present in that other State for a period or periods aggregating 183 days or more in any twelve-month period. Second, during that period or periods, more than 50 percent of the gross active business revenues of the enterprise (including revenue from active business activities unrelated to the provision of services) must consist of income derived from the services performed in that State by that individual. If the enterprise meets both of these tests, the enterprise will be deemed to provide the services through a permanent establishment. This test is employed to determine whether an enterprise is deemed to have a permanent establishment by virtue of the presence of a single individual (i.e., a natural person).

For the purposes of subparagraph 9(a), the term "gross active business revenues" shall mean the gross revenues attributable to active business activities that the enterprise has charged or should

charge for its active business activities, regardless of when the actual billing will occur or of domestic law rules concerning when such revenues should be taken into account for tax purposes. Such active business activities are not restricted to the activities related to the provision of services. However, the term does not include income from passive investment activities.

As an example of the application of subparagraph 9(a), assume that Mr. X, an individual resident in the United States, is one of the two shareholders and employees of USCo, a company resident in the United States that provides engineering services. During the 12-month period beginning December 20 of Year 1 and ending December 19 of Year 2, Mr. X is present in Canada for periods totaling 190 days, and during those periods, 70 percent of all of the gross active business revenues of USCo attributable to business activities are derived from the services that Mr. X performs in Canada. Because both of the criteria of subparagraph 9(a) are satisfied, USCo will be deemed to have a permanent establishment in Canada by virtue of that subparagraph.

The second test as provided in subparagraph 9(b) provides that an enterprise will have a permanent establishment if the services are provided in the other State for an aggregate of 183 days or more in any twelve-month period with respect to the same or connected projects for customers who either are residents of the other State or maintain a permanent establishment in the other State with respect to which the services are provided. The various conditions that have to be satisfied in order for subparagraph 9(b) to have application are described in detail below.

In addition to meeting the 183-day threshold, the services must be provided for customers who either are residents of the other State or maintain a permanent establishment in that State. The intent of this requirement is to reinforce the concept that unless there is a customer in the other State, such enterprise will not be deemed as participating sufficiently in the economic life of that other State to warrant being deemed to have a permanent establishment.

Assume for example, that CanCo, a Canadian company, wishes to acquire USCo, a company in the United States. In preparation for the acquisition, CanCo hires Canlaw, a Canadian law firm, to conduct a due diligence evaluation of USCo's legal and financial standing in the United States. Canlaw sends a staff attorney to the United States to perform the due diligence analysis of USCo. That attorney is present and working in the United States for greater than 183 days. If the remuneration paid to Canlaw for the attorney's services does not constitute more than 50 percent of Canlaw's gross active business revenues for the period during which the attorney is present in the United States, Canlaw will not be deemed to provide the services through a permanent establishment in the United States by virtue of subparagraph 9(a). Additionally, because the services are being provided for a customer (CanCo) who neither is a resident of the United States nor maintains a permanent establishment in the United States to which the services are provided, Canlaw will also not have a permanent establishment in the United States by virtue of subparagraph 9(b).

Paragraph 9 applies only to the provision of services, and only to services provided by an enterprise to third parties. Thus, the provision does not have the effect of deeming an enterprise to have a permanent establishment merely because services are provided to that enterprise. Paragraph 9 only applies to services that are performed or provided by an enterprise of a Contracting State within the other Contracting State. It is therefore not sufficient that the relevant services be merely furnished to a resident of the other Contracting State. Where, for example, an enterprise provides customer support or other services by telephone or computer to customers located in the other State, those would not be covered by paragraph 9 because they are not performed or provided by that enterprise within the other State. Another example would be that of an architect who is hired to design blueprints for the construction of a building in the other State. As part of completing the project, the architect must make site visits to that other State, and his days of presence there would be counted for purposes of determining whether the 183-day threshold is satisfied. However, the days that the architect spends working on the blueprint in his home office shall not count for purposes of the 183-day threshold, because the architect is not performing or providing those services within the other State.

For purposes of determining whether the time threshold has been met, subparagraph 9(b) permits the aggregation of services that are provided with respect to connected projects. Paragraph 2 of the General Note provides that for purposes of subparagraph 9(b), projects shall be considered to be connected if they constitute a coherent whole, commercially and geographically. The determination of whether projects are connected should be determined from the point of view of the enterprise (not that of the customer), and will depend on the facts and circumstances of each case. In determining the existence of commercial coherence, factors that would be relevant include: 1) whether the projects would, in the absence of tax planning considerations, have been concluded pursuant to a single contract; 2) whether the nature of the work involved under different projects is the same; and 3) whether the same individuals are providing the services under the different projects. Whether the work provided is covered by one or multiple contracts may be relevant, but not determinative, in finding that projects are commercially coherent.

The aggregation rule addresses, for example, potentially abusive situations in which work has been artificially divided into separate components in order to avoid meeting the 183-day threshold. Assume for example, that a technology consultant has been hired to install a new computer system for a company in the other country. The work will take ten months to complete. However, the consultant purports to divide the work into two five-month projects with the intention of circumventing the rule in subparagraph 9(b). In such case, even if the two projects were considered separate, they will be considered to be commercially coherent. Accordingly, subject to the additional requirement of geographic coherence, the two projects could be considered to be connected, and could therefore be aggregated for purposes of subparagraph 9(b). In contrast, assume that the technology consultant is contracted to install a particular

computer system for a company, and is also hired by that same company, pursuant to a separate contract, to train its employees on the use of another computer software that is unrelated to the first system. In this second case, even though the contracts are both concluded between the same two parties, there is no commercial coherence to the two projects, and the time spent fulfilling the two contracts may not be aggregated for purposes of subparagraph 9(b). Another example of projects that do not have commercial coherence would be the case of a law firm which, as one project provides tax advice to a customer from one portion of its staff, and as another project provides trade advice from another portion of its staff, both to the same customer.

Additionally, projects, in order to be considered connected, must also constitute a geographic whole. An example of projects that lack geographic coherence would be a case in which a consultant is hired to execute separate auditing projects at different branches of a bank located in different cities pursuant to a single contract. In such an example, while the consultant's projects are commercially coherent, they are not geographically coherent and accordingly the services provided in the various branches shall not be aggregated for purposes of applying subparagraph 9(b). The services provided in each branch should be considered separately for purposes of subparagraph 9(b).

The method of counting days for purposes of subparagraph 9(a) differs slightly from the method for subparagraph 9(b). Subparagraph 9(a) refers to days in which an individual is present in the other country. Accordingly, physical presence during a day is sufficient. In contrast, subparagraph 9(b) refers to days during which services are provided by the enterprise in the other country. Accordingly, non-working days such as weekends or holidays would not count for purposes of subparagraph 9(b), as long as no services are actually being provided while in the other country on those days. For the purposes of both subparagraphs, even if the enterprise sends many individuals simultaneously to the other country to provide services, their collective presence during one calendar day will count for only one day of the enterprise's presence in the other country. For instance, if an enterprise sends 20 employees to the other country to provide services to a client in the other country for 10 days, the enterprise will be considered present in the other country only for 10 days, not 200 days (20 employees x 10 days).

By deeming the enterprise to provide services through a permanent establishment in the other Contracting State, paragraph 9 allows the application of Article VII (Business Profits), and accordingly, the taxation of the services shall be on a net-basis. Such taxation is also limited to the profits attributable to the activities carried on in performing the relevant services. It will be important to ensure that only the profits properly attributable to the functions performed and risks assumed by provision of the services will be attributed to the deemed permanent establishment.

In addition to new paragraph 9, Article 3 of the Protocol amends paragraph 6 of Article V of the Convention to include a reference to paragraph 9. Therefore, in no case will paragraph 9 apply to deem services to be provided through a permanent establishment

if the services are limited to those mentioned in paragraph 6 which, if performed through a fixed place of business, would not make the fixed place of business a permanent establishment under the provisions of that paragraph.

The competent authorities are encouraged to consider adopting rules to reduce the potential for excess withholding or estimated tax payments with respect to employee wages that may result from the application of this paragraph. Further, because paragraph 6 of Article V applies notwithstanding paragraph 9, days spent on preparatory or auxiliary activities shall not be taken into account for purposes of applying subparagraph 9(b).

Paragraph 10 of Article V

Paragraph 2 of Article 3 of the Protocol also sets forth new paragraph 10 of Article V. The provisions of new paragraph 10 are identical to paragraph 9 of Article V as it existed prior to the Protocol. New paragraph 10 provides that the provisions of Article V shall be applied in determining whether any person has a permanent establishment in any State.

ARTICLE 4

Article 4 of the Protocol replaces paragraph 2 of Article VII (Business Profits).

New paragraph 2 provides that where a resident of either Canada or the United States carries on (or has carried on) business in the other Contracting State through a permanent establishment in that other State, both Canada and the United States shall attribute to permanent establishments in their respective states those business profits which the permanent establishment might be expected to make if it were a distinct and separate person engaged in the same or similar activities under the same or similar conditions and dealing wholly independently with the resident and with any other person related to the resident. The term "related to the resident" is to be interpreted in accordance with paragraph 2 of Article IX (Related Persons). The reference to other related persons is intended to make clear that the test of paragraph 2 is not restricted to independence between a permanent establishment and a home office.

New paragraph 2 is substantially similar to paragraph 2 as it existed before the Protocol. However, in addition to the reference to a resident of a Contracting State who "carries on" business in the other Contracting State, the Protocol incorporates into the Convention the rule of Code section 864(c)(6) by adding "or has carried on" to address circumstances where, as a result of timing, income may be attributable to a permanent establishment that no longer exists in one of the Contracting States. In such cases, the income is properly within the scope of Article VII. Conforming changes are also made in the Protocol to Articles X (Dividends), XI (Interest), and XII (Royalties) of the Convention where Article VII would apply. As is explained in paragraph 5 of the General Note, these revisions to the Convention are only intended to clarify the application of the existing provisions of the Convention.

The following example illustrates the application of paragraph 2. Assume a company that is a resident of Canada and that maintains a permanent establishment in the United States winds up the permanent establishment's business and sells the permanent establishment's inventory and assets to a U.S. buyer at the end of year 1 in exchange for an installment obligation payable in full at the end of year 3. Despite the fact that the company has no permanent establishment in the United States in year 3, the United States may tax the deferred income payment recognized by the company in year 3.

The "attributable to" concept of paragraph 2 provides an alternative to the analogous but somewhat different "effectively connected" concept in Code section 864(c). Depending on the circumstances, the amount of income "attributable to" a permanent establishment under Article VII may be greater or less than the amount of income that would be treated as "effectively connected" to a U.S. trade or business under Code section 864. In particular, in the case of financial institutions, the use of internal dealings to allocate income within an enterprise may produce results under Article VII that are significantly different than the results under the effectively connected income rules. For example, income from interbranch notional principal contracts may be taken into account under Article VII, notwithstanding that such transactions may be ignored for purposes of U.S. domestic law. A taxpayer may use the treaty to reduce its taxable income, but may not use both treaty and Code rules where doing so would thwart the intent of either set of rules. *See* Rev. Rul. 84–17, 1984–1 C.B. 308.

The profits attributable to a permanent establishment may be from sources within or without a Contracting State. However, as stated in the General Note, the business profits attributable to a permanent establishment include only those profits derived from the assets used, risks assumed, and activities performed by the permanent establishment.

The language of paragraph 2, when combined with paragraph 3 dealing with the allowance of deductions for expenses incurred for the purposes of earning the profits, incorporates the arm's length standard for purposes of determining the profits attributable to a permanent establishment. The United States and Canada generally interpret the arm's length standard in a manner consistent with the OECD Transfer Pricing Guidelines.

Paragraph 9 of the General Note confirms that the arm's length method of paragraphs 2 and 3 consists of applying the OECD Transfer Pricing Guidelines, but taking into account the different economic and legal circumstances of a single legal entity (as opposed to separate but associated enterprises). Thus, any of the methods used in the Transfer Pricing Guidelines, including profits methods, may be used as appropriate and in accordance with the Transfer Pricing Guidelines. However, the use of the Transfer Pricing Guidelines applies only for purposes of attributing profits within the legal entity. It does not create legal obligations or other tax consequences that would result from transactions having independent legal significance. Thus, the Contracting States agree that the notional payments used to compute the profits that are attributable to a permanent establishment will not be taxed as if they

were actual payments for purposes of other taxing provisions of the Convention, for example, for purposes of taxing a notional royalty under Article XII (Royalties).

One example of the different circumstances of a single legal entity is that an entity that operates through branches rather than separate subsidiaries generally will have lower capital requirements because all of the assets of the entity are available to support all of the entity's liabilities (with some exceptions attributable to local regulatory restrictions). This is the reason that most commercial banks and some insurance companies operate through branches rather than subsidiaries. The benefit that comes from such lower capital costs must be allocated among the branches in an appropriate manner. This issue does not arise in the case of an enterprise that operates through separate entities, since each entity will have to be separately capitalized or will have to compensate another entity for providing capital (usually through a guarantee).

Under U.S. domestic regulations, internal "transactions" generally are not recognized because they do not have legal significance. In contrast, the rule provided by the General Note is that such internal dealings may be used to attribute income to a permanent establishment in cases where the dealings accurately reflect the allocation of risk within the enterprise. One example is that of global trading in securities. In many cases, banks use internal swap transactions to transfer risk from one branch to a central location where traders have the expertise to manage that particular type of risk. Under paragraph 2 as set forth in the Protocol, such a bank may also use such swap transactions as a means of attributing income between the branches, if use of that method is the "best method" within the meaning of regulation section 1.482–1(c). The books of a branch will not be respected, however, when the results are inconsistent with a functional analysis. So, for example, income from a transaction that is booked in a particular branch (or home office) will not be treated as attributable to that location if the sales and risk management functions that generate the income are performed in another location.

The understanding in the General Note also affects the interpretation of paragraph 3 of Article VII. Paragraph 3 provides that in determining the business profits of a permanent establishment, deductions shall be allowed for the expenses incurred for the purposes of the permanent establishment, ensuring that business profits will be taxed on a net basis. This rule is not limited to expenses incurred exclusively for the purposes of the permanent establishment, but includes expenses incurred for the purposes of the enterprise as a whole, or that part of the enterprise that includes the permanent establishment. Deductions are to be allowed regardless of which accounting unit of the enterprise books the expenses, so long as they are incurred for the purposes of the permanent establishment. For example, a portion of the interest expense recorded on the books of the home office in one State may be deducted by a permanent establishment in the other. The amount of the expense that must be allowed as a deduction is determined by applying the arm's length principle.

As noted above, paragraph 9 of the General Note provides that the OECD Transfer Pricing Guidelines apply, by analogy, in deter-

mining the profits attributable to a permanent establishment. Accordingly, a permanent establishment may deduct payments made to its head office or another branch in compensation for services performed for the benefit of the branch. The method to be used in calculating that amount will depend on the terms of the arrangements between the branches and head office. For example, the enterprise could have a policy, expressed in writing, under which each business unit could use the services of lawyers employed by the head office. At the end of each year, the costs of employing the lawyers would be charged to each business unit according to the amount of services used by that business unit during the year. Since this has the characteristics of a cost-sharing arrangement and the allocation of costs is based on the benefits received by each business unit, such a cost allocation would be an acceptable means of determining a permanent establishment's deduction for legal expenses. Alternatively, the head office could agree to employ lawyers at its own risk, and to charge an arm's length price for legal services performed for a particular business unit. If the lawyers were under-utilized, and the "fees" received from the business units were less than the cost of employing the lawyers, then the head office would bear the excess cost. If the "fees" exceeded the cost of employing the lawyers, then the head office would keep the excess to compensate it for assuming the risk of employing the lawyers. If the enterprise acted in accordance with this agreement, this method would be an acceptable alternative method for calculating a permanent establishment's deduction for legal expenses.

The General Note also makes clear that a permanent establishment cannot be funded entirely with debt, but must have sufficient capital to carry on its activities as if it were a distinct and separate enterprise. To the extent that the permanent establishment has not been attributed capital for profit attribution purposes, a Contracting State may attribute such capital to the permanent establishment, in accordance with the arm's length principle, and deny an interest deduction to the extent necessary to reflect that capital attribution. The method prescribed by U.S. domestic law for making this attribution is found in Treas. Reg. section 1.882–5. Both section 1.882–5 and the method prescribed in the General Note start from the premise that all of the capital of the enterprise supports all of the assets and risks of the enterprise, and therefore the entire capital of the enterprise must be allocated to its various businesses and offices.

However, section 1.882–5 does not take into account the fact that some assets create more risk for the enterprise than do other assets. An independent enterprise would need less capital to support a perfectly-hedged U.S. Treasury security than it would need to support an equity security or other asset with significant market and/or credit risk. Accordingly, in some cases section 1.882–5 would require a taxpayer to allocate more capital to the United States, and therefore would reduce the taxpayer's interest deduction more, than is appropriate. To address these cases, the General Note allows a taxpayer to apply a more flexible approach that takes into account the relative risk of its assets in the various jurisdictions in which it does business. In particular, in the case of financial institutions other than insurance companies, the amount of capital at-

tributable to a permanent establishment is determined by allocating the institution's total equity between its various offices on the basis of the proportion of the financial institution's risk-weighted assets attributable to each of them. This recognizes the fact that financial institutions are in many cases required to risk-weight their assets for regulatory purposes and, in other cases, will do so for business reasons even if not required to do so by regulators. However, risk-weighting is more complicated than the method prescribed by section 1.882–5. Accordingly, to ease this administrative burden, taxpayers may choose to apply the principles of Treas. Reg. section 1.882–5(c) to determine the amount of capital allocable to its U.S. permanent establishment, in lieu of determining its allocable capital under the risk-weighted capital allocation method provided by the General Note, even if it has otherwise chosen the principles of Article VII rather than the effectively connected income rules of U.S. domestic law. It is understood that this election is not binding for purposes of Canadian taxation unless the result is in accordance with the arm's length principle.

As noted in the Convention, nothing in paragraph 3 requires a Contracting State to allow the deduction of any expenditure which, by reason of its nature, is not generally allowed as a deduction under the tax laws in that State.

ARTICLE 5

Article 5 makes a number of amendments to Article X (Dividends) of the existing Convention. As with other benefits of the Convention, the benefits of Article X are available to a resident of a Contracting State only if that resident is entitled to those benefits under the provisions of Article XXIX A (Limitation on Benefits).

See the Technical Explanation for new paragraphs 6 and 7 of Article IV (Residence) for discussion regarding the interaction between domestic law concepts of beneficial ownership and the treaty rules to determine when a person is considered to derive an item of income for purposes of obtaining benefits of the Convention such as withholding rate reductions.

Paragraph 1

Paragraph 1 of Article 5 of the Protocol replaces subparagraph 2(a) of Article X of the Convention. In general, paragraph 2 limits the amount of tax that may be imposed on dividends by the Contracting State in which the company paying the dividends is resident if the beneficial owner of the dividends is a resident of the other Contracting State. Subparagraph 2(a) limits the rate to 5 percent of the gross amount of the dividends if the beneficial owner is a company that owns 10 percent or more of the voting stock of the company paying the dividends.

The Protocol adds a parenthetical to address the determination of the requisite ownership set forth in subparagraph 2(a) when the beneficial owner of dividends receives the dividends through an entity that is considered fiscally transparent in the beneficial owner's Contracting State. The added parenthetical stipulates that voting stock in a company paying the dividends that is indirectly held through an entity that is considered fiscally transparent in the beneficial owner's Contracting State is taken into account, provided

the entity is not a resident of the other Contracting State. The United States views the new parenthetical as merely a clarification.

For example, assume USCo, a U.S. corporation, directly owns 2 percent of the voting stock of CanCo, a Canadian company that is considered a corporation in the United States and Canada. Further, assume that USCo owns 18 percent of the interests in LLC, an entity that in turn owns 50 percent of the voting stock of CanCo. CanCo pays a dividend to each of its shareholders. Provided that LLC is fiscally transparent in the United States and not considered a resident of Canada, USCo's 9 percent ownership in CanCo through LLC (50 percent x 18 percent) is taken into account in determining whether USCo meets the 10 percent ownership threshold set forth in subparagraph 2(a). In this example, USCo may aggregate its voting stock interests in CanCo that it owns directly and through LLC to determine if it satisfies the ownership requirement of subparagraph 2(a). Accordingly, USCo will be entitled to the 5 percent rate of withholding on dividends paid with respect to both its voting stock held through LLC and its voting stock held directly. Alternatively, if, for example, all of the shareholders of LLC were natural persons, the 5 percent rate would not apply.

Paragraph 2

Paragraph 2 of Article 5 of the Protocol replaces the definition of the term "dividends" provided in paragraph 3 of Article X of the Convention. The new definition conforms to the U.S. Model formulation. Paragraph 3 defines the term dividends broadly and flexibly. The definition is intended to cover all arrangements that yield a return on an equity investment in a corporation as determined under the tax law of the source State, as well as arrangements that might be developed in the future.

The term dividends includes income from shares, or other corporate rights that are not treated as debt under the law of the source State, that participate in the profits of the company. The term also includes income that is subjected to the same tax treatment as income from shares by the law of the source State. Thus, for example, a constructive dividend that results from a non-arm's length transaction between a corporation and a related party is a dividend. In the case of the United States the term "dividend" includes amounts treated as a dividend under U.S. law upon the sale or redemption of shares or upon a transfer of shares in a reorganization. *See,* e.g., Rev. Rul. 92–85, 1992–2 C.B. 69 (sale of foreign subsidiary's stock to U.S. sister company is a deemed dividend to extent of the subsidiary's and sister company's earnings and profits). Further, a distribution from a U.S. publicly traded limited partnership that is taxed as a corporation under U.S. law is a dividend for purposes of Article X. However, a distribution by a limited liability company is not considered by the United States to be a dividend for purposes of Article X, provided the limited liability company is not characterized as an association taxable as a corporation under U.S. law.

Paragraph 3 of the General Note states that distributions from Canadian income trusts and royalty trusts that are treated as dividends as a result of changes to Canada's taxation of income and

royalty trusts enacted in 2007 (S.C. 2007, c. 29) shall be treated as dividends for the purposes of Article X.

Additionally, a payment denominated as interest that is made by a thinly capitalized corporation may be treated as a dividend to the extent that the debt is recharacterized as equity under the laws of the source State. At the time the Protocol was signed, interest payments subject to Canada's thin-capitalization rules were not recharacterized as dividends.

Paragraph 3

Paragraph 3 of Article 5 of the Protocol replaces paragraph 4 of Article X. New paragraph 4 is substantially similar to paragraph 4 as it existed prior to the Protocol. New paragraph 4, however, adds clarifying language consistent with the changes made in Articles 4, 6, and 7 of the Protocol with respect to income attributable to a permanent establishment that has ceased to exist. Paragraph 4 provides that the limitations of paragraph 2 do not apply if the beneficial owner of the dividends carries on or has carried on business in the State in which the company paying the dividends is a resident through a permanent establishment situated there, and the stockholding in respect of which the dividends are paid is effectively connected to such permanent establishment. In such a case, the dividends are taxable pursuant to the provisions of Article VII (Business Profits). Thus, dividends paid in respect of holdings forming part of the assets of a permanent establishment or which are otherwise effectively connected to such permanent establishment will be taxed on a net basis using the rates and rules of taxation generally applicable to residents of the State in which the permanent establishment is situated.

To conform with Article 9 of the Protocol, which deletes Article XIV (Independent Personal Services) of the Convention, paragraph 4 of Article 5 of the Protocol also amends paragraph 5 of Article X by omitting the reference to a "fixed base."

Paragraph 4

To conform with Article 9 of the Protocol, which deletes Article XIV (Independent Personal Services) of the Convention, paragraph 4 of Article 5 of the Protocol amends paragraph 5 of Article X by omitting the reference to a "fixed base."

Paragraph 5

Paragraph 5 of Article 5 of the Protocol replaces subparagraph 7(c) of Article X of the existing Convention. Consistent with current U.S. tax treaty policy, new subparagraph 7(c) provides rules that expand the application of subparagraph 2(b) for the treatment of dividends paid by a Real Estate Investment Trust (REIT). New subparagraph 7(c) maintains the rule of the existing Convention that dividends paid by a REIT are not eligible for the 5 percent maximum rate of withholding tax of subparagraph 2(a), and provides that the 15 percent maximum rate of withholding tax of subparagraph 2(b) applies to dividends paid by REITs only if one of three conditions is met.

First, the dividend will qualify for the 15 percent maximum rate if the beneficial owner of the dividend is an individual holding an

interest of not more than 10 percent in the REIT. For this purpose, subparagraph 7(c) also provides that where an estate or testamentary trust acquired its interest in a REIT as a consequence of the death of an individual, the estate or trust will be treated as an individual for the five-year period following the death. Thus, dividends paid to an estate or testamentary trust in respect of a holding of less than a 10 percent interest in the REIT also will be entitled to the 15 percent rate of withholding, but only for up to five years after the death.

Second, the dividend will qualify for the 15 percent maximum rate if it is paid with respect to a class of stock that is publicly traded and the beneficial owner of the dividend is a person holding an interest of not more than 5 percent of any class of the REIT's stock.

Third, the dividend will qualify for the 15 percent maximum rate if the beneficial owner of the dividend holds an interest in the REIT of 10 percent or less and the REIT is "diversified." A REIT is diversified if the gross value of no single interest in real property held by the REIT exceeds 10 percent of the gross value of the REIT's total interest in real property. For purposes of this diversification test, foreclosure property is not considered an interest in real property, and a REIT holding a partnership interest is treated as owning its proportionate share of any interest in real property held by the partnership.

A resident of Canada directly holding U.S. real property would pay U.S. tax either at a 30 percent rate of withholding tax on the gross income or at graduated rates on the net income. By placing the real property in a REIT, the investor absent a special rule could transform real estate income into dividend income, taxable at the rates provided in Article X, significantly reducing the U.S. tax that otherwise would be imposed. Subparagraph 7(c) prevents this result and thereby avoids a disparity between the taxation of direct real estate investments and real estate investments made through REIT conduits. In the cases in which subparagraph 7(c) allows a dividend from a REIT to be eligible for the 15 percent maximum rate of withholding tax, the holding in the REIT is not considered the equivalent of a direct holding in the underlying real property.

Article 6

Article 6 of the Protocol replaces Article XI (Interest) of the existing Convention. Article XI specifies the taxing jurisdictions over interest income of the States of source and residence and defines the terms necessary to apply Article XI. As with other benefits of the Convention, the benefits of Article XI are available to a resident of a Contracting State only if that resident is entitled to those benefits under the provisions of Article XXIX A (Limitation on Benefits).

Paragraph 1 of Article XI

New paragraph 1 generally grants to the residence State the exclusive right to tax interest beneficially owned by its residents and arising in the other Contracting State. *See* the Technical Explanation for new paragraphs 6 and 7 of Article IV (Residence) for discussion regarding the interaction between domestic law concepts of beneficial ownership and the treaty rules to determine when a per-

son is considered to derive an item of income for purposes of obtaining benefits under the Convention such as withholding rate reductions.

Subparagraph 3(d) of Article 27 of the Protocol provides an additional rule regarding the application of paragraph 1 during the first two years that end after the Protocol's entry into force. This rule is described in detail in the Technical Explanation to Article 27.

Paragraph 2 of Article XI

Paragraph 2 of new Article XI is substantially identical to paragraph 4 of Article XI of the existing Convention.

Paragraph 2 defines the term "interest" as used in Article XI to include, inter alia, income from debt claims of every kind, whether or not secured by a mortgage. Interest that is paid or accrued subject to a contingency is within the ambit of Article XI. This includes income from a debt obligation carrying the right to participate in profits. The term does not, however, include amounts that are treated as dividends under Article X (Dividends).

The term "interest" also includes amounts subject to the same tax treatment as income from money lent under the law of the State in which the income arises. Thus, for purposes of the Convention, amounts that the United States will treat as interest include (i) the difference between the issue price and the stated redemption price at maturity of a debt instrument (i.e., original issue discount (OID)), which may be wholly or partially realized on the disposition of a debt instrument (section 1273), (ii) amounts that are imputed interest on a deferred sales contract (section 483), (iii) amounts treated as interest or OID under the stripped bond rules (section 1286), (iv) amounts treated as original issue discount under the below-market interest rate rules (section 7872), (v) a partner's distributive share of a partnership's interest income (section 702), (vi) the interest portion of periodic payments made under a "finance lease" or similar contractual arrangement that in substance is a borrowing by the nominal lessee to finance the acquisition of property, (vii) amounts included in the income of a holder of a residual interest in a real estate mortgage investment conduit (REMIC) (section 860E), because these amounts generally are subject to the same taxation treatment as interest under U.S. tax law, and (viii) interest with respect to notional principal contracts that are recharacterized as loans because of a "substantial non-periodic payment."

Paragraph 3 is in all material respects the same as paragraph 5 of Article XI of the existing Convention. New paragraph 3 adds clarifying language consistent with the changes made in Articles 4, 5, and 7 of the Protocol with respect to income attributable to a permanent establishment that has ceased to exist. Also, consistent with the changes described in Article 9 of the Protocol, discussed below, paragraph 3 does not contain references to the performance of independent personal services through a fixed base.

Paragraph 3 provides an exception to the exclusive residence taxation rule of paragraph 1 in cases where the beneficial owner of the interest carries on business through a permanent establishment in the State of source and the interest is effectively connected to that permanent establishment. In such cases the provisions of Article

VII (Business Profits) will apply and the source State will retain the right to impose tax on such interest income.

Paragraph 4 of Article XI

Paragraph 4 is in all material respects the same as paragraph 6 of Article XI of the existing Convention. The only difference is that, consistent with the changes described below with respect to Article 9 of the Protocol, paragraph 4 does not contain references to a fixed base.

Paragraph 4 establishes the source of interest for purposes of Article XI. Interest is considered to arise in a Contracting State if the payer is that State, or a political subdivision, local authority, or resident of that State. However, in cases where the person paying the interest, whether a resident of a Contracting State or of a third State, has in a State other than that of which he is a resident a permanent establishment in connection with which the indebtedness on which the interest was paid was incurred, and such interest is borne by the permanent establishment, then such interest is deemed to arise in the State in which the permanent establishment is situated and not in the State of the payer's residence. Furthermore, pursuant to paragraphs 1 and 4, and Article XXII (Other Income), Canadian tax will not be imposed on interest paid to a U.S. resident by a company resident in Canada if the indebtedness is incurred in connection with, and the interest is borne by, a permanent establishment of the company situated in a third State. For the purposes of this Article, "borne by" means allowable as a deduction in computing taxable income.

Paragraph 5 of Article XI

Paragraph 5 is identical to paragraph 7 of Article XI of the existing Convention.

Paragraph 5 provides that in cases involving special relationships between the payer and the beneficial owner of interest income or between both of them and some other person, Article XI applies only to that portion of the total interest payments that would have been made absent such special relationships (i.e., an arm's-length interest payment). Any excess amount of interest paid remains taxable according to the laws of the United States and Canada, respectively, with due regard to the other provisions of the Convention.

New paragraph 6 provides anti-abuse exceptions to exclusive residence State taxation in paragraph 1 for two classes of interest payments.

The first class of interest, dealt with in subparagraphs 6(a) and 6(b), is so-called "contingent interest." With respect to interest arising in the United States, subparagraph 6(a) refers to contingent interest of a type that does not qualify as portfolio interest under U.S. domestic law. The cross-reference to the U.S. definition of contingent interest, which is found in Code section 871(h)(4), is intended to ensure that the exceptions of Code section 871 (h)(4)(C) will apply. With respect to Canada, such interest is defined in subparagraph 6(b) as any interest arising in Canada that is determined by reference to the receipts, sales, income, profits or other cash flow of the debtor or a related person, to any change in the

value of any property of the debtor or a related person or to any dividend, partnership distribution or similar payment made by the debtor or a related person.1 Any such interest may be taxed in Canada according to the laws of Canada.

Under subparagraph 6(a) or 6(b), if the beneficial owner is a resident of the other Contracting State, the gross amount of the "contingent interest" may be taxed at a rate not exceeding 15 percent.

The second class of interest is dealt with in subparagraph 6(c). This exception is consistent with the policy of Code sections 860E(e) and 860G(b) that excess inclusions with respect to a real estate mortgage investment conduit (REMIC) should bear full U.S. tax in all cases. Without a full tax at source, foreign purchasers of residual interests would have a competitive advantage over U.S. purchasers at the time these interests are initially offered. Also, absent this rule, the U.S. fisc would suffer a revenue loss with respect to mortgages held in a REMIC because of opportunities for tax avoidance created by differences in the timing of taxable and economic income produced by these interests.

Therefore, subparagraph 6(c) provides a bilateral provision that interest that is an excess inclusion with respect to a residual interest in a REMIC may be taxed by each State in accordance with its domestic law. While the provision is written reciprocally, at the time the Protocol was signed, the provision had no application in respect of Canadian-source interest, as Canada did not have REMICs.

Paragraph 7 of Article XI

Paragraph 7 is in all material respects the same as paragraph 8 of Article XI of the existing Convention. The only difference is that, consistent with the changes made in Article 9 of the Protocol, paragraph 7 removes the references to a fixed base.

Paragraph 7 restricts the right of a Contracting State to impose tax on interest paid by a resident of the other Contracting State. The first State may not impose any tax on such interest except insofar as the interest is paid to a resident of that State or arises in that State or the debt claim in respect of which the interest is paid is effectively connected with a permanent establishment situated in that State.

1 New subparagraph 6(b) of Article XI erroneously refers to a "similar payment made by the debtor to a related person." The correct formulation, which the Contracting States agree to apply, is "similar payment made by the debtor or a related person."

Relationship to other Articles

Notwithstanding the foregoing limitations on source State taxation of interest, the saving clause of paragraph 2 of Article XXIX (Miscellaneous Rules) permits the United States to tax its residents and citizens, subject to the special foreign tax credit rules of paragraph 5 of Article XXIV (Elimination of Double Taxation), as if the Convention had not come into force.

ARTICLE 7

Article 7 of the Protocol amends Article XII (Royalties) of the existing Convention. As with other benefits of the Convention, the

benefits of Article XII are available to a resident of a Contracting State only if that resident is entitled to those benefits under the provisions of Article XXIX A (Limitation on Benefits).

See the Technical Explanation for new paragraphs 6 and 7 of Article IV (Residence) for discussion regarding the interaction between domestic law concepts of beneficial ownership and the treaty rules to determine when a person is considered to derive an item of income for purposes of obtaining benefits of the Convention such as withholding rate reductions.

Paragraph 1

Paragraph 1 of Article 7 of the Protocol replaces paragraph 5 of Article XII of the Convention. In all material respects, new paragraph 5 is the same as paragraph 5 of Article XII of the existing Convention. However, new paragraph 5 adds clarifying language consistent with the changes made in Articles 4, 5, and 6 of the Protocol with respect to income attributable to a permanent establishment that has ceased to exist. To conform with Article 9 of the Protocol, which deletes Article XIV (Independent Personal Services) of the Convention, paragraph 1 of Article 7 of the Protocol also amends paragraph 5 of Article XII by omitting the reference to a "fixed base."

New paragraph 5 provides that the 10 percent limitation on tax in the source State provided by paragraph 2, and the exemption in the source State for certain royalties provided by paragraph 3, do not apply if the beneficial owner of the royalties carries on or has carried on business in the source State through a permanent establishment and the right or property in respect of which the royalties are paid is attributable to such permanent establishment. In such case, the royalty income would be taxable by the source State under the provisions of Article VII (Business Profits).

Paragraph 2

Paragraph 2 of Article 7 of the Protocol sets forth a new subparagraph 6(a) of Article XII that is in all material respects the same as subparagraph 6(a) of Article XII of the existing Convention. The only difference is that, consistent with the changes made in Article 9 of the Protocol, new subparagraph 6(a) omits references to a "fixed base."

Paragraph 3

Paragraph 3 of Article 7 of Protocol amends paragraph 8 of Article XII of the Convention to remove references to a "fixed base." In addition, paragraph 8 of the General Note confirms the intent of the Contracting States that the reference in subparagraph 3(c) of Article XII of the Convention to information provided in connection with a franchise agreement generally refers only to information that governs or otherwise deals with the operation (whether by the payer or by another person) of the franchise, and not to other information concerning industrial, commercial or scientific experience that is held for resale or license.

ARTICLE 8

Paragraph 1

Paragraph 1 of Article 8 of the Protocol replaces paragraph 2 of Article XIII (Gains) of the existing Convention. Consistent with Article 9 of the Protocol, new paragraph 2 does not contain any reference to property pertaining to a fixed base or to the performance of independent personal services.

New paragraph 2 of Article XIII provides that the Contracting State in which a resident of the other Contracting State has or had a permanent establishment may tax gains from the alienation of personal property constituting business property if such gains are attributable to such permanent establishment. Unlike paragraph 1 of Article VII (Business Profits), paragraph 2 limits the right of the source State to tax such gains to a twelve-month period following the termination of the permanent establishment.

Paragraph 2

Paragraph 2 of Article 8 of the Protocol replaces paragraph 5 of Article XIII of the existing Convention. In general, new paragraph 5 provides an exception to the general rule stated in paragraph 4 that gains from the alienation of any property, other than property referred to in paragraphs 1, 2, and 3, shall be taxable only in the Contracting State of which the alienator is a resident. Paragraph 5 provides that a Contracting State may, according to its domestic law, impose tax on gains derived by an individual who is a resident of the other Contracting State if such individual was a resident of the first-mentioned State for 120 months (whether or not consecutive) during any period of 20 consecutive years preceding the alienation of the property, and was a resident of that State at any time during the 10-year period immediately preceding the alienation of the property. Further, the property (or property received in substitution in a tax-free transaction in the first-mentioned State) must have been owned by the individual at the time he ceased to be a resident of the first-mentioned State and must not have been property that the individual was treated as having alienated by reason of ceasing to be a resident of the first-mentioned State and becoming a resident of the other Contracting State.

The provisions of new paragraph 5 are substantially similar to paragraph 5 of Article XIII of the existing Convention. However, the Protocol adds a new requirement to paragraph 5 that the property not be "a property that the individual was treated as having alienated by reason of ceasing to be a resident of the first-mentioned State and becoming a resident of the other Contracting State." This new requirement reflects the fact that the main purpose of paragraph 5—ensuring that gains that accrue while an individual is resident in a Contracting State remain taxable for the stated time after the individual has moved to the other State—is met if that pre-departure gain is taxed in the first State immediately before the individual's emigration. This rule applies whether or not the individual makes the election provided by paragraph 7 of Article XIII, as amended, which is described below.

Paragraph 3

Paragraph 3 of Article 8 of the Protocol replaces paragraph 7 of Article XIII.

The purpose of paragraph 7, in both its former and revised form, is to provide a rule to coordinate U.S. and Canadian taxation of gains in the case of a timing mismatch. Such a mismatch may occur, for example, where a Canadian resident is deemed, for Canadian tax purposes, to recognize capital gain upon emigrating from Canada to the United States, or in the case of a gift that Canada deems to be an income producing event for its tax purposes but with respect to which the United States defers taxation while assigning the donor's basis to the donee. The former paragraph 7 resolved the timing mismatch of taxable events by allowing the individual to elect to be liable to tax in the deferring Contracting State as if he had sold and repurchased the property for an amount equal to its fair market value at a time immediately prior to the deemed alienation.

The election under former paragraph 7 was not available to certain non-U.S. citizens subject to tax in Canada by virtue of a deemed alienation because such individuals could not elect to be liable to tax in the United States. To address this problem, the Protocol replaces the election provided in former paragraph 7, with an election by the taxpayer to be treated by a Contracting State as having sold and repurchased the property for its fair market value immediately before the taxable event in the other Contracting State. The election in new paragraph 7 therefore will be available to any individual who emigrates from Canada to the United States, without regard to whether the person is a U.S. citizen immediately before ceasing to be a resident of Canada. If the individual is not subject to U.S. tax at that time, the effect of the election will be to give the individual an adjusted basis for U.S. tax purposes equal to the fair market value of the property as of the date of the deemed alienation in Canada, with the result that only post-emigration gain will be subject to U.S. tax when there is an actual alienation. If the Canadian resident is also a U.S. citizen at the time of his emigration from Canada, then the provisions of new paragraph 7 would allow the U.S. citizen to accelerate the tax under U.S. tax law and allow tax credits to be used to avoid double taxation. This would also be the case if the person, while not a U.S. citizen, would otherwise be subject to taxation in the United States on a disposition of the property.

In the case of Canadian taxation of appreciated property given as a gift, absent paragraph 7, the donor could be subject to tax in Canada upon making the gift, and the donee may be subject to tax in the United States upon a later disposition of the property on all or a portion of the same gain in the property without the availability of any foreign tax credit for the tax paid to Canada. Under new paragraph 7, the election will be available to any individual who pays taxes in Canada on a gain arising from the individual's gifting of a property, without regard to whether the person is a U.S. taxpayer at the time of the gift. The effect of the election in such case will be to give the donee an adjusted basis for U.S. tax purposes equal to the fair market value as of the date of the gift. If the donor is a U.S. taxpayer, the effect of the election will be the

realization of gain or loss for U.S. purposes immediately before the gift. The acceleration of the U.S. tax liability by reason of the election in such case enables the donor to utilize foreign tax credits and avoid double taxation with respect to the disposition of the property.

Generally, the rule does not apply in the case of death. Note, however, that Article XXIX B (Taxes Imposed by Reason of Death) of the Convention provides rules that coordinate the income tax that Canada imposes by reason of death with the U.S. estate tax.

If in one Contracting State there are losses and gains from deemed alienations of different properties, then paragraph 7 must be applied consistently in the other Contracting State within the taxable period with respect to all such properties. Paragraph 7 only applies, however, if the deemed alienations of the properties result in a net gain.

Taxpayers may make the election provided by new paragraph 7 only with respect to property that is subject to a Contracting State's deemed disposition rules and with respect to which gain on a deemed alienation is recognized for that Contracting State's tax purposes in the taxable year of the deemed alienation. At the time the Protocol was signed, the following were the main types of property that were excluded from the deemed disposition rules in the case of individuals (including trusts) who cease to be residents of Canada: real property situated in Canada; interests and rights in respect of pensions; life insurance policies (other than segregated fund (investment) policies); rights in respect of annuities; interests in testamentary trusts, unless acquired for consideration; employee stock options; property used in a business carried on through a permanent establishment in Canada (including intangibles and inventory); interests in most Canadian personal trusts; Canadian resource property; and timber resource property.

Paragraph 4

Consistent with the provisions of Article 9 of the Protocol, paragraph 4 of Article 8 of the Protocol amends subparagraph 9(c) of Article XIII of the existing Convention to remove the words "or pertained to a fixed base."

Relationship to other Articles

The changes to Article XIII set forth in paragraph 3 were announced in a press release issued by the Treasury Department on September 18, 2000. Consistent with that press release, subparagraph 3(e) of Article 27 of the Protocol provides that the changes, jointly effectuated by paragraphs 2 and 3, will be generally effective for alienations of property that occur after September 17, 2000.

ARTICLE 9

To conform with the current U.S. and OECD Model Conventions, Article 9 of the Protocol deletes Article XIV (Independent Personal Services) of the Convention. The subsequent articles of the Convention are not renumbered. Paragraph 4 of the General Note elaborates that current tax treaty practice omits separate articles for independent personal services because a determination of the existence of a fixed base is qualitatively the same as the determination

of the existence of a permanent establishment. Accordingly, the taxation of income from independent personal services is adequately governed by the provisions of Articles V (Permanent Establishment) and VII (Business Profits).

ARTICLE 10

Article 10 of the Protocol renames Article XV of the Convention as "Income from Employment" to conform with the current U.S. and OECD Model Conventions, and replaces paragraphs 1 and 2 of that renamed article consistent with the OECD Model Convention.

Paragraph 1

New paragraph 1 of Article XV provides that, in general, salaries, wages, and other remuneration derived by a resident of a Contracting State in respect of an employment are taxable only in that State unless the employment is exercised in the other Contracting State. If the employment is exercised in the other Contracting State, the entire remuneration derived therefrom may be taxed in that other State, subject to the provisions of paragraph 2.

New paragraph 1 of Article XV does not contain a reference to "similar" remuneration. This change was intended to clarify that Article XV applies to any form of compensation for employment, including payments in kind. This interpretation is consistent with paragraph 2.1 of the Commentary to Article 15 (Income from Employment) of the OECD Model and the Technical Explanation of the 2006 U.S. Model.

Paragraph 2

New paragraph 2 of Article XV provides two limitations on the right of a source State to tax remuneration for services rendered in that State. New paragraph 2 is divided into two subparagraphs that each sets forth a rule which, notwithstanding any contrary result due to the application of paragraph 1 of Article XV, prevents the source State from taxing income from employment in that State.

First, subparagraph 2(a) provides a safe harbor rule that the remuneration may not be taxed in the source State if such remuneration is $10,000 or less in the currency of the source State. This rule is identical to the rule in subparagraph 2(a) of Article XV of the existing Convention. It is understood that, consistent with the prior rule, the safe harbor will apply on a calendar-year basis.

Second, if the remuneration is not exempt from tax in the source State by virtue of subparagraph 2(a), subparagraph 2(b) provides an additional rule that the source State may not tax remuneration for services rendered in that State if the recipient is present in the source State for a period (or periods) that does not exceed in the aggregate 183 days in any twelve-month period commencing or ending in the fiscal year concerned, and the remuneration is not paid by or on behalf of a person who is a resident of that other State or borne by a permanent establishment in that other State. For purposes of this article, "borne by" means allowable as a deduction in computing taxable income.

Assume, for example, that Mr. X, an individual resident in Canada, is an employee of the Canadian permanent establishment of

USCo, a U.S. company. Mr. X is sent to the United States to perform services and is present in the United States for less than 183 days. Mr. X receives more than $10,000 (U.S.) in the calendar year(s) in question. The remuneration paid to Mr. X for such services is not exempt from U.S. tax under paragraph 1, because his employer, USCo, is a resident of the United States and pays his remuneration. If instead Mr. X received less than $10,000 (U.S.), such earnings would be exempt from tax in the United States, because in all cases where an employee earns less than $10,000 in the currency of the source State, such earnings are exempt from tax in the source State.

As another example, assume Ms. Y, an individual resident in the United States is employed by USCo, a U.S. company. Ms. Y is sent to Canada to provide services in the Canadian permanent establishment of USCo. Ms. Y is present in Canada for less than 183 days. Ms. Y receives more than $10,000 (Canadian) in the calendar year(s) in question. USCo charges the Canadian permanent establishment for Ms. Y's remuneration, which the permanent establishment takes as a deduction in computing its taxable income. The remuneration paid to Ms. Y for such services is not exempt from Canadian tax under paragraph 1, because her remuneration is borne by the Canadian permanent establishment.

New subparagraph 2(b) refers to remuneration that is paid by or on behalf of a "person" who is a resident of the other Contracting State, as opposed to an "employer." This change is intended only to clarify that both the United States and Canada understand that in certain abusive cases, substance over form principles may be applied to recharacterize an employment relationship, as prescribed in paragraph 8 of the Commentary to Article 15 (Income from Employment) of the OECD Model. Subparagraph 2(b) is intended to have the same meaning as the analogous provisions in the U.S. and OECD Models.

Paragraph 6 of the General Note

Paragraph 6 of the General Note contains special rules regarding employee stock options. There are no similar rules in the U.S. Model or the OECD Model, although the issue is discussed in detail in paragraph 12 of the Commentary to Article 15 (Income from Employment) of the OECD Model.

The General Note sets forth principles that apply for purposes of applying Article XV and Article XXIV (Elimination of Double Taxation) to income of an individual in connection with the exercise or other disposal (including a deemed exercise or disposal) of an option that was granted to the individual as an employee of a corporation or mutual fund trust to acquire shares or units ("securities") of the employer in respect of services rendered or to be rendered by such individual, or in connection with the disposal (including a deemed disposal) of a security acquired under such an option. For this purpose, the term "employer" is considered to include any entity related to the service recipient. The reference to a disposal (or deemed disposal) reflects the fact that under Canadian law and under certain provisions of U.S. law, income or gain attributable to the granting or exercising of the option may, in some cases, not be recognized until disposition of the securities.

Subparagraph 6(a) of the General Note provides a specific rule to address situations where, under the domestic law of the Contracting States, an employee would be taxable by both Contracting States in respect of the income in connection with the exercise or disposal of the option. The rule provides an allocation of taxing rights where (1) an employee has been granted a stock option in the course of employment in one of the Contracting States, and (2) his principal place of employment has been situated in one or both of the Contracting States during the period between grant and exercise (or disposal) of the option. In this situation, each Contracting State may tax as Contracting State of source only that proportion of the income that relates to the period or periods between the grant and the exercise (or disposal) of the option during which the individual's principal place of employment was situated in that Contracting State. The proportion attributable to a Contracting State is determined by multiplying the income by a fraction, the numerator of which is the number of days between the grant and exercise (or disposal) of the option during which the employee's principal place of employment was situated in that Contracting State and the denominator of which is the total number of days between grant and exercise (or disposal) of the option that the employee was employed by the employer.

If the individual is a resident of one of the Contracting States at the time he exercises the option, that Contracting State will have the right, as the State of residence, to tax all of the income under the first sentence of paragraph 1 of Article XV. However, to the extent that the employee renders his employment in the other Contracting State for some period of time between the date of the grant of the option and the date of the exercise (or disposal) of the option, the proportion of the income that is allocated to the other Contracting State under subparagraph 6(a) of the General Note will, subject to paragraph 2, be taxable by that other State under the second sentence of paragraph 1 of Article XV of the Convention. For this purpose, the tests of paragraph 2 of Article XV are applied to the year or years in which the relevant services were performed in the other Contracting State (and not to the year in which the option is exercised or disposed). To the extent the same income is subject to taxation in both Contracting States after application of Article XV, double taxation will be alleviated under the rules of Article XXIV (Elimination of Double Taxation).

Subparagraph 6(b) of the General Note provides that notwithstanding subparagraph 6(a), if the competent authorities of both Contracting States agree that the terms of the option were such that the grant of the option is appropriately treated as transfer of ownership of the securities (e.g., because the options were in-the-money or not subject to a substantial vesting period), then they may agree to attribute income accordingly.

ARTICLE 11

Consistent with Article 9 and paragraph 1 of Article 10 of the Protocol, paragraphs 1, 2, and 3 of Article 11 of the Protocol revise paragraphs 1, 2, and 4 of Article XVI (Artistes and Athletes) of the existing Convention by deleting references to former Article XIV (Independent Personal Services) of the Convention and deleting

and replacing other language in acknowledgement of the renaming of Article XV (Income from Employment).

ARTICLE 12

Article 12 of the Protocol deletes Article XVII (Withholding of Taxes in Respect of Personal Services) from the Convention. However, the subsequent Articles are not renumbered.

ARTICLE 13

Article 13 of the Protocol replaces paragraphs 3, 4, and 7 and adds paragraphs 8 through 17 to Article XVIII (Pensions and Annuities) of the Convention.

Paragraph 1—Roth IRAs

Paragraph 1 of Article 13 of the Protocol separates the provisions of paragraph 3 of Article XVIII into two subparagraphs. Subparagraph 3(a) contains the existing definition of the term "pensions," while subparagraph 3(b) adds a new rule to address the treatment of Roth IRAs or similar plan (as described below).

Subparagraph 3(a) of Article XVIII provides that the term "pensions" for purposes of the Convention includes any payment under a superannuation, pension, or other retirement arrangement, Armed-Forces retirement pay, war veterans pensions and allowances, and amounts paid under a sickness, accident, or disability plan, but does not include payments under an income-averaging annuity contract (which are subject to Article XXII (Other Income)) or social security benefits, including social security benefits in respect of government services (which are subject to paragraph 5 of Article XVIII). Thus, the term "pensions" includes pensions paid by private employers (including pre-tax and Roth 401(k) arrangements) as well as any pension paid in respect of government services. Further, the definition of "pensions" includes, for example, payments from individual retirement accounts (IRAs) in the United States and from registered retirement savings plans (RRSPs) and registered retirement income funds (RRIFs) in Canada.

Subparagraph 3(b) of Article XVIII provides that the term "pensions" generally includes a Roth IRA, within the meaning of Code section 408A (or a similar plan described below). Consequently, under paragraph 1 of Article XVIII, distributions from a Roth IRA to a resident of Canada generally continue to be exempt from Canadian tax to the extent they would have been exempt from U.S. tax if paid to a resident of the United States. In addition, residents of Canada generally may make an election under paragraph 7 of Article XVIII to defer any taxation in Canada with respect to income accrued in a Roth IRA but not distributed by the Roth IRA, until such time as and to the extent that a distribution is made from the Roth IRA or any plan substituted therefore. Because distributions will be exempt from Canadian tax to the extent they would have been exempt from U.S. tax if paid to a resident of the United States, the effect of these rules is that, in most cases, no portion of the Roth IRA will be subject to taxation in Canada.

However, subparagraph 3(b) also provides that if an individual who is a resident of Canada makes contributions to his or her Roth IRA while a resident of Canada, other than rollover contributions

from another Roth IRA (or a similar plan described below), the Roth IRA will cease to be considered a pension at that time with respect to contributions and accretions from such time and accretions from such time will be subject to tax in Canada in the year of accrual. Thus, the Roth IRA will in effect be bifurcated into a "frozen" pension that continues to be subject to the rules of Article XVIII and a savings account that is not subject to the rules of Article XVIII. It is understood by the Contracting States that, following a rollover contribution from a Roth 401(k) arrangement to a Roth IRA, the Roth IRA will continue to be treated as a pension subject to the rules of Article XVIII.

Assume, for example, that Mr. X moves to Canada on July 1, 2008. Mr. X has a Roth IRA with a balance of 1,100 on July 1, 2008. Mr. X elects under paragraph 7 of Article XVIII to defer any taxation in Canada with respect to income accrued in his Roth IRA while he is a resident of Canada. Mr. X makes no additional contributions to his Roth IRA until July 1, 2010, when he makes an after-tax contribution of 100. There are accretions of 20 during the period July 1, 2008 through June 30, 2010, which are not taxed in Canada by reason of the election under paragraph 7 of Article XVIII. There are additional accretions of 50 during the period July 1, 2010 through June 30, 2015, which are subject to tax in Canada in the year of accrual. On July 1, 2015, while Mr. X is still a resident of Canada, Mr. X receives a lump-sum distribution of 1,270 from his Roth IRA. The 1,120 that was in the Roth IRA on June 30, 2010 is treated as a distribution from a pension plan that, pursuant to paragraph 1 of Article XVIII, is exempt from tax in Canada provided it would be exempt from tax in the United States under the Internal Revenue Code if paid to a resident of the United States. The remaining 150 comprises the after-tax contribution of 100 in 2010 and accretions of 50 that were subject to Canadian tax in the year of accrual.

The rules of new subparagraph 3(b) of Article XVIII also will apply to any plan or arrangement created pursuant to legislation enacted by either Contracting State after September 21, 2007 (the date of signature of the Protocol) that the competent authorities agree is similar to a Roth IRA.

Source of payments under life insurance and annuity contracts

Paragraph 1 of Article 13 also replaces paragraph 4 of Article XVIII. Subparagraph 4(a) contains the existing definition of annuity, while subparagraph 4(b) adds a source rule to address the treatment of certain payments by branches of insurance companies.

Subparagraph 4(a) provides that, for purposes of the Convention, the term "annuity" means a stated sum paid periodically at stated times during life or during a specified number of years, under an obligation to make the payments in return for adequate and full consideration other than services rendered. The term does not include a payment that is not periodic or any annuity the cost of which was deductible for tax purposes in the Contracting State where the annuity was acquired. Items excluded from the definition of "annuity" and not dealt with under another Article of the Convention are subject to the rules of Article XXII (Other Income).

Under the existing Convention, payments under life insurance and annuity contracts to a resident of Canada by a Canadian

branch of a U.S. insurance company are subject to either a 15-percent withholding tax under subparagraph 2(b) of Article XVIII or, unless dealt with under another Article of the Convention, an unreduced 30-percent withholding tax under paragraph 1 of Article XXII, depending on whether the payments constitute annuities within the meaning of paragraph 4 of Article XVIII.

On July 12, 2004, the Internal Revenue Service issued Revenue Ruling 2004–75, 2004–2 C.B. 109, which provides in relevant part that annuity payments under, and withdrawals of cash value from, life insurance or annuity contracts issued by a foreign branch of a U.S. life insurance company are U.S.-source income that, when paid to a nonresident alien individual, is generally subject to a 30-percent withholding tax under Code sections 871(a) and 1441. Revenue Ruling 2004–97, 2004–2 C.B. 516, provided that Revenue Ruling 2004–75 would not be applied to payments that were made before January 1, 2005, provided that such payments were made pursuant to binding life insurance or annuity contracts issued on or before July 12, 2004.

Under new subparagraph 4(b) of Article XVIII, an annuity or other amount paid in respect of a life insurance or annuity contract (including a withdrawal in respect of the cash value thereof), will generally be deemed to arise in the Contracting State where the person paying the annuity or other amount (the "payer") is resident. However, if the payer, whether a resident of a Contracting State or not, has a permanent establishment in a Contracting State other than a Contracting State in which the payer is a resident, the payment will be deemed to arise in the Contracting State in which the permanent establishment is situated if both of the following requirements are satisfied: (i) the obligation giving rise to the annuity or other amount must have been incurred in connection with the permanent establishment, and (ii) the annuity or other amount must be borne by the permanent establishment. When these requirements are satisfied, payments by a Canadian branch of a U.S. insurance company will be deemed to arise in Canada.

Paragraph 2

Paragraph 2 of Article 13 of the Protocol replaces paragraph 7 of Article XVIII of the existing Convention. Paragraph 7 continues to provide a rule with respect to the taxation of a natural person on income accrued in a pension or employee benefit plan in the other Contracting State. Thus, paragraph 7 applies where an individual is a citizen or resident of a Contracting State and is a beneficiary of a trust, company, organization, or other arrangement that is a resident of the other Contracting State, where such trust, company, organization, or other arrangement is generally exempt from income taxation in that other State, and is operated exclusively to provide pension, or employee benefits. In such cases, the beneficiary may elect to defer taxation in his State of residence on income accrued in the plan until it is distributed from the plan (or from another plan in that other Contracting State to which the income is transferred pursuant to the domestic law of that other Contracting State).

Paragraph 2 of Article 13 of the Protocol makes two changes to paragraph 7 of Article XVIII of the existing Convention. The first change is that the phrase "pension, retirement or employee benefits" is changed to "pension or employee benefits" solely to reflect the fact that in certain cases, discussed above, Roth IRAs will not be treated as pensions for purposes of Article XVIII. The second change is that "under" is changed to "subject to" to make it clear that an election to defer taxation with respect to undistributed income accrued in a plan may be made whether or not the competent authority of the first-mentioned State has prescribed rules for making an election. For the U.S. rules, see Revenue Procedure 2002–23, 2002–1 C.B. 744. As of the date the Protocol was signed, the competent authority of Canada had not prescribed rules.

Paragraph 3

Paragraph 3 of Article 13 of the Protocol adds paragraphs 8 through 17 to Article XVIII to deal with cross-border pension contributions. These paragraphs are intended to remove barriers to the flow of personal services between the Contracting States that could otherwise result from discontinuities in the laws of the Contracting States regarding the deductibility of pension contributions. Such discontinuities may arise where a country allows deductions or exclusions to its residents for contributions, made by them or on their behalf, to resident pension plans, but does not allow deductions or exclusions for payments made to plans resident in another country, even if the structure and legal requirements of such plans in the two countries are similar.

There is no comparable set of rules in the OECD Model, although the issue is discussed in detail in the Commentary to Article 18 (Pensions). The 2006 U.S. Model deals with this issue in paragraphs 2 through 4 of Article 18 (Pension Funds).

Workers on short-term assignments in the other Contracting State

Paragraphs 8 and 9 of Article XVIII address the case of a short-term assignment where an individual who is participating in a "qualifying retirement plan" (as defined in paragraph 15 of Article XVIII) in one Contracting State (the "home State") performs services as an employee for a limited period of time in the other Contracting State (the "host State"). If certain requirements are satisfied, contributions made to, or benefits accrued under, the plan by or on behalf of the individual will be deductible or excludible in computing the individual's income in the host State. In addition, contributions made to the plan by the individual's employer will be allowed as a deduction in computing the employer's profits in the host State.

In order for paragraph 8 to apply, the remuneration that the individual receives with respect to the services performed in the host State must be taxable in the host State. This means, for example, that where the United States is the host State, paragraph 8 would not apply if the remuneration that the individual receives with respect to the services performed in the United States is exempt from taxation in the United States under Code section 893.

The individual also must have been participating in the plan, or in another similar plan for which the plan was substituted, imme-

diately before he began performing services in the host State. The rule regarding a successor plan would apply if, for example, the employer has been acquired by another corporation that replaces the existing plan with its own plan, transferring membership in the old plan over into the new plan.

In addition, the individual must not have been a resident (as determined under Article IV (Residence)) of the host State immediately before he began performing services in the host State. It is irrelevant for purposes of paragraph 8 whether the individual becomes a resident of the host State while he performs services there. A citizen of the United States who has been a resident of Canada may be entitled to benefits under paragraph 8 if (a) he performs services in the United States for a limited period of time and (b) he was a resident of Canada immediately before he began performing such services.

Benefits are available under paragraph 8 only for so long as the individual has not performed services in the host State for the same employer (or a related employer) for more than 60 of the 120 months preceding the individual's current taxable year. The purpose of this rule is to limit the period of time for which the host State will be required to provide benefits for contributions to a plan from which it is unlikely to be able to tax the distributions. If the individual continues to perform services in the host State beyond this time limit, he is expected to become a participant in a plan in the host State. Canada's domestic law provides preferential tax treatment for employer contributions to foreign pension plans in respect of services rendered in Canada by short-term residents, but such treatment ceases once the individual has been resident in Canada for at least 60 of the preceding 72 months.

The contributions and benefits must be attributable to services performed by the individual in the host State, and must be made or accrued during the period in which the individual performs those services. This rule prevents individuals who render services in the host State for a very short period of time from making disproportionately large contributions to home State plans in order to offset the tax liability associated with the income earned in the host State. In the case where the United States is the host State, contributions will be deemed to have been made on the last day of the preceding taxable year if the payment is on account of such taxable year and is treated under U.S. law as a contribution made on the last day of the preceding taxable year.

If an individual receives benefits in the host State with respect to contributions to a plan in the home State, the services to which the contributions relate may not be taken into account for purposes of determining the individual's entitlement to benefits under any trust, company, organization, or other arrangement that is a resident of the host State, generally exempt from income taxation in that State and operated to provide pension or retirement benefits. The purpose of this rule is to prevent double benefits for contributions to both a home State plan and a host State plan with respect to the same services. Thus, for example, an individual who is working temporarily in the United States and making contributions to a qualifying retirement plan in Canada with respect to services performed in the United States may not make contributions to an

individual retirement account (within the meaning of Code section 40 8(a)) in the United States with respect to the same services.

Paragraph 8 states that it applies only to the extent that the contributions or benefits would qualify for tax relief in the home State if the individual were a resident of and performed services in that State. Thus, benefits would be limited in the same fashion as if the individual continued to be a resident of the home State. However, paragraph 9 provides that if the host State is the United States and the individual is a citizen of the United States, the benefits granted to the individual under paragraph 8 may not exceed the benefits that would be allowed by the United States to its residents for contributions to, or benefits otherwise accrued under, a generally corresponding pension or retirement plan established in and recognized for tax purposes by the United States. Thus, the lower of the two limits applies. This rule ensures that U.S. citizens working temporarily in the United States and participating in a Canadian plan will not get more favorable U.S. tax treatment than U.S. citizens participating in a U.S. plan.

Where the United States is the home State, the amount of contributions that may be excluded from the employee's income under paragraph 8 for Canadian purposes is limited to the U.S. dollar amount specified in Code section 415 or the U.S. dollar amount specified in Code section 402(g)(1) to the extent contributions are made from the employee's compensation. For this purpose, the dollar limit specified in Code section 402(g)(1) means the amount applicable under Code section 402(g)(1) (including the age 50 catch-up amount in Code section 402(g)(1)(C)) or, if applicable, the parallel dollar limit applicable under Code section 457(e)(15) plus the age 50 catch-up amount under Code section 414(v)(2)(B)(i) for a Code section 457(g) trust.

Where Canada is the home State, the amount of contributions that may be excluded from the employee's income under paragraph 8 for U.S. purposes is subject to the limitations specified in subsections 146(5), 147(8), 147.1(8) and (9) and 147.2(1) and (4) of the Income Tax Act and paragraph 8503(4)(a) of the Income Tax Regulations, as applicable. If the employee is a citizen of the United States, then the amount of contributions that may be excluded is the lesser of the amounts determined under the limitations specified in the previous sentence and the amounts specified in the previous paragraph.

The provisions described above provide benefits to employees. Paragraph 8 also provides that contributions made to the home State plan by an individual's employer will be allowed as a deduction in computing the employer's profits in the host State, even though such a deduction might not be allowable under the domestic law of the host State. This rule applies whether the employer is a resident of the host State or a permanent establishment that the employer has in the host State. The rule also applies to contributions by a person related to the individual's employer, such as contributions by a parent corporation for its subsidiary, that are treated under the law of the host State as contributions by the individual's employer. For example, if an individual who is participating in a qualifying retirement plan in Canada performs services for a limited period of time in the United States for a U.S. subsidiary of

a Canadian company, a contribution to the Canadian plan by the parent company in Canada that is treated under U.S. law as a contribution by the U.S. subsidiary would be covered by the rule.

The amount of the allowable deduction is to be determined under the laws of the home State. Thus, where the United States is the home State, the amount of the deduction that is allowable in Canada will be subject to the limitations of Code section 404 (including the Code section 401(a)(17) and 415 limitations). Where Canada is the home State, the amount of the deduction that is allowable in the United States is subject to the limitations specified in subsections 147(8), 147.1(8) and (9) and 147.2(1) of the Income Tax Act, as applicable.

Cross-border commuters

Paragraphs 10, 11, and 12 of Article XVIII address the case of a commuter who is a resident of one Contracting State (the "residence State") and performs services as an employee in the other Contracting State (the "services State") and is a member of a "qualifying retirement plan" (as defined in paragraph 15 of Article XVIII) in the services State. If certain requirements are satisfied, contributions made to, or benefits accrued under, the qualifying retirement plan by or on behalf of the individual will be deductible or excludible in computing the individual's income in the residence State.

In order for paragraph 10 to apply, the individual must perform services as an employee in the services State the remuneration from which is taxable in the services State and is borne by either an employer who is a resident of the services State or by a permanent establishment that the employer has in the services State. The contributions and benefits must be attributable to those services and must be made or accrued during the period in which the individual performs those services. In the case where the United States is the residence State, contributions will be deemed to have been made on the last day of the preceding taxable year if the payment is on account of such taxable year and is treated under U.S. law as a contribution made on the last day of the preceding taxable year.

Paragraph 10 states that it applies only to the extent that the contributions or benefits qualify for tax relief in the services State. Thus, the benefits granted in the residence State are available only to the extent that the contributions or benefits accrued qualify for relief in the services State. Where the United States is the services State, the amount of contributions that may be excluded under paragraph 10 is the U.S. dollar amount specified in Code section 415 or the U.S. dollar amount specified in Code section 402(g)(1) (as defined above) to the extent contributions are made from the employee's compensation. Where Canada is the services State, the amount of contributions that may be excluded from the employee's income under paragraph 10 is subject to the limitations specified in subsections 146(5), 147(8), 147.1(8) and (9) and 147.2(1) and (4) of the Income Tax Act and paragraph 8503(4)(a) of the Income Tax Regulations, as applicable.

However, paragraphs 11 and 12 further provide that the benefits granted under paragraph 10 by the residence State may not exceed

certain benefits that would be allowable under the domestic law of the residence State.

Paragraph 11 provides that where Canada is the residence State, the amount of contributions otherwise allowable as a deduction under paragraph 10 may not exceed the individual's deduction limit for contributions to registered retirement savings plans (RRSPs) remaining after taking into account the amount of contributions to RRSPs deducted by the individual under the law of Canada for the year. The amount deducted by the individual under paragraph 10 will be taken into account in computing the individual's deduction limit for subsequent taxation years for contributions to RRSPs. This rule prevents double benefits for contributions to both an RRSP and a qualifying retirement plan in the United States with respect to the same services.

Paragraph 12 provides that if the United States is the residence State, the benefits granted to an individual under paragraph 10 may not exceed the benefits that would be allowed by the United States to its residents for contributions to, or benefits otherwise accrued under, a generally corresponding pension or retirement plan established in and recognized for tax purposes by the United States. For purposes of determining an individual's eligibility to participate in and receive tax benefits with respect to a pension or retirement plan or other retirement arrangement in the United States, contributions made to, or benefits accrued under, a qualifying retirement plan in Canada by or on behalf of the individual are treated as contributions or benefits under a generally corresponding pension or retirement plan established in and recognized for tax purposes by the United States. Thus, for example, the qualifying retirement plan in Canada would be taken into account for purposes of determining whether the individual is an "active participant" within the meaning of Code section 21 9(g)(5), with the result that the individual's ability to make deductible contributions to an individual retirement account in the United States would be limited.

Paragraph 10 does not address employer deductions because the employer is located in the services State and is already eligible for deductions under the domestic law of the services State.

U.S. citizens resident in Canada

Paragraphs 13 and 14 of Article XVIII address the special case of a U.S. citizen who is a resident of Canada (as determined under Article IV (Residence)) and who performs services as an employee in Canada and participates in a qualifying retirement plan (as defined in paragraph 15 of Article XVIII) in Canada. If certain requirements are satisfied, contributions made to, or benefits accrued under, a qualifying retirement plan in Canada by or on behalf of the U.S. citizen will be deductible or excludible in computing his or her taxable income in the United States. These provisions are generally consistent with paragraph 4 of Article 18 of the U.S. Model treaty.

In order for paragraph 13 to apply, the U.S. citizen must perform services as an employee in Canada the remuneration from which is taxable in Canada and is borne by an employer who is a resident of Canada or by a permanent establishment that the employer has

in Canada. The contributions and benefits must be attributable to those services and must be made or accrued during the period in which the U.S. citizen performs those services. Contributions will be deemed to have been made on the last day of the preceding taxable year if the payment is on account of such taxable year and is treated under U.S. law as a contribution made on the last day of the preceding taxable year.

Paragraph 13 states that it applies only to the extent the contributions or benefits qualify for tax relief in Canada. However, paragraph 14 provides that the benefits granted under paragraph 13 may not exceed the benefits that would be allowed by the United States to its residents for contributions to, or benefits otherwise accrued under, a generally corresponding pension or retirement plan established in and recognized for tax purposes by the United States. Thus, the lower of the two limits applies. This rule ensures that a U.S. citizen living and working in Canada does not receive better U.S. treatment than a U.S. citizen living and working in the United States. The amount of contributions that may be excluded from the employee's income under paragraph 13 is the U.S. dollar amount specified in Code section 415 or the U.S. dollar amount specified in Code section 402(g)(1) (as defined above) to the extent contributions are made from the employee's compensation. In addition, pursuant to Code section 91 1(d)(6), an individual may not claim benefits under paragraph 13 with respect to services the remuneration for which is excluded from the individual's gross income under Code section 911(a).

For purposes of determining the individual's eligibility to participate in and receive tax benefits with respect to a pension or retirement plan or other retirement arrangement established in and recognized for tax purposes by the United States, contributions made to, or benefits accrued under, a qualifying retirement plan in Canada by or on behalf of the individual are treated as contributions or benefits under a generally corresponding pension or retirement plan established in and recognized for tax purposes by the United States. Thus, for example, the qualifying retirement plan in Canada would be taken into account for purposes of determining whether the individual is an "active participant" within the meaning of Code section 21 9(g)(5), with the result that the individual's ability to make deductible contributions to an individual retirement account in the United States would be limited.

Paragraph 13 does not address employer deductions because the employer is located in Canada and is already eligible for deductions under the domestic law of Canada.

Definition of "qualifying retirement plan"

Paragraph 15 of Article XVIII provides that for purposes of paragraphs 8 through 14, a "qualifying retirement plan" in a Contracting State is a trust, company, organization, or other arrangement that (a) is a resident of that State, generally exempt from income taxation in that State and operated primarily to provide pension or retirement benefits; (b) is not an individual arrangement in respect of which the individual's employer has no involvement; and (c) the competent authority of the other Contracting State agrees generally corresponds to a pension or retirement plan established

in and recognized for tax purposes in that State. Thus, U.S. individual retirement accounts (IRAs) and Canadian registered retirement savings plans (RRSPs) are not treated as qualifying retirement plans unless addressed in paragraph 10 of the General Note (as discussed below). In addition, a Canadian retirement compensation arrangement (RCA) is not a qualifying retirement plan because it is not considered to be generally exempt from income taxation in Canada.

Paragraph 10 of the General Note provides that the types of Canadian plans that constitute qualifying retirement plans for purposes of paragraph 15 include the following and any identical or substantially similar plan that is established pursuant to legislation introduced after the date of signature of the Protocol (September 21, 2007): registered pension plans under section 147.1 of the Income Tax Act, registered retirement savings plans under section 146 that are part of a group arrangement described in subsection 204.2(1.32), deferred profit sharing plans under section 147, and any registered retirement savings plan under section 146, or registered retirement income fund under section 146.3, that is funded exclusively by rollover contributions from one or more of the preceding plans.

Paragraph 10 of the General Note also provides that the types of U.S. plans that constitute qualifying retirement plans for purposes of paragraph 15 include the following and any identical or substantially similar plan that is established pursuant to legislation introduced after the date of signature of the Protocol (September 21, 2007): qualified plans under Code section 401(a) (including Code section 401(k) arrangements), individual retirement plans that are part of a simplified employee pension plan that satisfies Code section 408(k), Code section 408(p) simple retirement accounts, Code section 403(a) qualified annuity plans, Code section 403(b) plans, Code section 457(g) trusts providing benefits under Code section 457(b) plans, the Thrift Savings Fund (Code section 7701(j)), and any individual retirement account under Code section 408(a) that is funded exclusively by rollover contributions from one or more of the preceding plans.

If a particular plan in one Contracting State is of a type specified in paragraph 10 of the General Note with respect to paragraph 15 of Article XVIII, it will not be necessary for taxpayers to obtain a determination from the competent authority of the other Contracting State that the plan generally corresponds to a pension or retirement plan established in and recognized for tax purposes in that State. A taxpayer who believes a particular plan in one Contracting State that is not described in paragraph 10 of the General Note nevertheless satisfies the requirements of paragraph 15 may request a determination from the competent authority of the other Contracting State that the plan generally corresponds to a pension or retirement plan established in and recognized for tax purposes in that State. In the case of the United States, such a determination must be requested under Revenue Procedure 2006–54, 2006–49 I.R.B. 655 (or any applicable analogous provision). In the case of Canada, the current version of Information Circular 71–17 provides guidance on obtaining assistance from the Canadian competent authority.

Source rule

Paragraph 16 of Article XVIII provides that a distribution from a pension or retirement plan that is reasonably attributable to a contribution or benefit for which a benefit was allowed pursuant to paragraph 8, 10, or 13 of Article XVIII will be deemed to arise in the Contracting State in which the plan is established. This ensures that the Contracting State in which the plan is established will have the right to tax the gross amount of the distribution under subparagraph 2(a) of Article XVIII, even if a portion of the services to which the distribution relates were not performed in such Contracting State.

Partnerships

Paragraph 17 of Article XVIII provides that paragraphs 8 through 16 of Article XVIII apply, with such modifications as the circumstances require, as though the relationship between a partnership that carries on a business, and an individual who is a member of the partnership, were that of employer and employee. This rule is needed because paragraphs 8, 10, and 13, by their terms, apply only with respect to contributions made to, or benefits accrued under, qualifying retirement plans by or on behalf of individuals who perform services as an employee. Thus, benefits are not available with respect to retirement plans for self-employed individuals, who may be deemed under U.S. law to be employees for certain pension purposes. Paragraph 17 ensures that partners participating in a plan established by their partnership may be eligible for the benefits provided by paragraphs 8, 10, and 13.

Relationship to other Articles

Paragraphs 8, 10, and 13 of Article XVIII are not subject to the saving clause of paragraph 2 of Article XXIX (Miscellaneous Rules) by reason of the exception in subparagraph 3(a) of Article XXIX.

ARTICLE 14

Consistent with Articles 9 and 10 of the Protocol, Article 14 of the Protocol amends Article XIX (Government Service) of the Convention by deleting the reference to "Article XIV (Independent Personal Services)" and replacing such reference with the reference to "Article VII (Business Profits)" and by reflecting the new name of Article XV (Income from Employment).

ARTICLE 15

Article 15 of the Protocol replaces Article XX (Students) of the Convention. Article XX provides rules for host-country taxation of visiting students and business trainees. Persons who meet the tests of Article XX will be exempt from tax in the State that they are visiting with respect to designated classes of income. Several conditions must be satisfied in order for an individual to be entitled to the benefits of this Article.

First, the visitor must have been, either at the time of his arrival in the host State or immediately before, a resident of the other Contracting State.

Second, the purpose of the visit must be the full-time education or training of the visitor. Thus, if the visitor comes principally to work in the host State but also is a part-time student, he would not be entitled to the benefits of this Article, even with respect to any payments he may receive from abroad for his maintenance or education, and regardless of whether or not he is in a degree program. Whether a student is to be considered full-time will be determined by the rules of the educational institution at which he is studying.

The host State exemption in Article XX applies to payments received by the student or business trainee for the purpose of his maintenance, education or training that arise outside the host State. A payment will be considered to arise outside the host State if the payer is located outside the host State. Thus, if an employer from one of the Contracting States sends an employee to the other Contracting State for full-time training, the payments the trainee receives from abroad from his employer for his maintenance or training while he is present in the host State will be exempt from tax in the host State. Where appropriate, substance prevails over form in determining the identity of the payer. Thus, for example, payments made directly or indirectly by a U.S. person with whom the visitor is training, but which have been routed through a source outside the United States (e.g., a foreign subsidiary), are not treated as arising outside the United States for this purpose.

In the case of an apprentice or business trainee, the benefits of Article XX will extend only for a period of one year from the time that the individual first arrives in the host country for the purpose of the individual's training. If, however, an apprentice or trainee remains in the host country for a second year, thus losing the benefits of the Arti-cle, he would not retroactively lose the benefits of the Article for the first year.

Relationship to other Articles

The saving clause of paragraph 2 of Article XXIX (Miscellaneous Rules) does not apply to Article XX with respect to an individual who neither is a citizen of the host State nor has been admitted for permanent residence there. The saving clause, however, does apply with respect to citizens and permanent residents of the host State. Thus, a U.S. citizen who is a resident of Canada and who visits the United States as a full-time student at an accredited university will not be exempt from U.S. tax on remittances from abroad that otherwise constitute U.S. taxable income. However, an individual who is not a U.S. citizen, and who visits the United States as a student and remains long enough to become a resident under U.S. law, but does not become a permanent resident (i.e., does not acquire a green card), will be entitled to the full benefits of the Article.

ARTICLE 16

Article 16 of the Protocol revises Article XXI (Exempt Organizations) of the existing Convention.

Paragraph 1

Paragraph 1 amends Article XXI by renumbering paragraphs 4, 5, and 6 as 5, 6, and 7, respectively.

Paragraph 2

Paragraph 2 replaces paragraphs 1 through 3 of Article XXI with four new paragraphs. In general, the provisions of former paragraphs 1 through 3 have been retained.

New paragraph 1 provides that a religious, scientific, literary, educational, or charitable organization resident in a Contracting State shall be exempt from tax on income arising in the other Contracting State but only to the extent that such income is exempt from taxation in the Contracting State in which the organization is resident.

New paragraph 2 retains the provisions of former subparagraph 2(a), and provides that a trust, company, organization, or other arrangement that is resident in a Contracting State and operated exclusively to administer or provide pension, retirement or employee benefits or benefits for the self-employed under one or more funds or plans established to provide pension or retirement benefits or other employee benefits is exempt from taxation on dividend and interest income arising in the other Contracting State in a taxable year, if the income of such organization or other arrangement is generally exempt from taxation for that year in the Contracting State in which it is resident.

New paragraph 3 replaces and expands the scope of former subparagraph 2(b) Former subparagraph 2(b) provided that, subject to the provisions of paragraph 3 (new paragraph 4), a trust, company, organization or other arrangement that was a resident of a Contracting State, generally exempt from income taxation in that State and operated exclusively to earn income for the benefit of one or more organizations described in subparagraph 2(a) (new paragraph 2) was exempt from taxation on dividend and interest income arising in the other Contracting State in a taxable year. The Internal Revenue Service concluded in private letter rulings (PLR 200111027 and PLR 200111037) that a pooled investment fund that included as investors one or more organizations described in paragraph 1 could not qualify for benefits under former subparagraph 2(b). New paragraph 3 now allows organizations described in paragraph 1 to invest in pooled funds with trusts, companies, organizations, or other arrangements described in new paragraph 2.

Former subparagraph 2(b) did not exempt income earned by a trust, company or other arrangement for the benefit of religious, scientific, literary, educational or charitable organizations exempt from tax under paragraph 1. Therefore, the Protocol expands the scope of paragraph 3 to include such income.

As noted above with respect to Article X (Dividends), paragraph 3 of the General Note explains that distributions from Canadian income trusts and royalty trusts that are treated as dividends as a result of changes to Canada's law regarding taxation of income and royalty trusts shall be treated as dividends for the purposes of Article X. Accordingly, such distributions will also be entitled to the benefits of Article XXI.

New paragraph 4 replaces paragraph 3 and provides that the exemptions provided by paragraphs 1, 2, 3 do not apply with respect to the income of a trust, company, organization or other arrangement from carrying on a trade or business or from a related person, other than a person referred to in paragraph 1, 2 or 3. The term "related person" is not necessarily defined by paragraph 2 of Article IX (Related Person).

ARTICLE 17

Article 17 of the Protocol amends Article XXII (Other Income) of the Convention by adding a new paragraph 4. Article XXII generally assigns taxing jurisdiction over income not dealt with in the other articles (Articles VI through XXI) of the Convention.

New paragraph 4 provides a specific rule for residence State taxation of compensation derived in respect of a guarantee of indebtedness. New paragraph 4 provides that compensation derived by a resident of a Contracting State in respect of the provision of a guarantee of indebtedness shall be taxable only in that State, unless the compensation is business profits attributable to a permanent establishment situated in the other Contracting State, in which case the provisions of Article VII (Business Profits) shall apply. The clarification that Article VII shall apply when the compensation is considered business profits was included at the request of the United States. Compensation paid to a financial services entity to provide a guarantee in the ordinary course of its business of providing such guarantees to customers constitutes business profits dealt with under the provisions of Article VII. However, provision of guarantees with respect to debt of related parties is ordinarily not an independent economic undertaking that would generate business profits, and thus compensation in respect of such related-party guarantees is, in most cases, covered by Article XXII.

ARTICLE 18

Article 18 of the Protocol amends paragraph 2 of Article XXIII (Capital) of the Convention by deleting language contained in that paragraph consistent with the changes made by Article 9 of the Protocol.

ARTICLE 19

Article 19 of the Protocol deletes subparagraph 2(b) of Article XXIV (Elimination of Double Taxation) of the Convention and replaces it with a new subparagraph.

New subparagraph 2(b) allows a Canadian company receiving a dividend from a U.S. resident company of which it owns at least 10 percent of the voting stock, a credit against Canadian income tax of the appropriate amount of income tax paid or accrued to the United States by the dividend paying company with respect to the profits out of which the dividends are paid. The third Protocol to the Convention, signed March 17, 1995, had amended subparagraph (b) to allow a Canadian company to deduct in computing its Canadian taxable income any dividend received by it out of the exempt surplus of a foreign affiliate which is a resident of the United States. This change is consistent with current Canadian tax treaty

practice: it does not indicate any present intention to change Canada's "exempt surplus" rules, and those rules remain in effect.

ARTICLE 20

Article 20 of the Protocol revises Article XXV (Non-Discrimination) of the existing Convention to bring that Article into closer conformity to U.S. tax treaty policy.

Paragraphs 1 and 2

Paragraph 1 replaces paragraph 1 of Article XXV of the existing Convention. New paragraph 1 provides that a national of one Contracting State may not be subject to taxation or connected requirements in the other Contracting State that are more burdensome than the taxes and connected requirements imposed upon a national of that other State in the same circumstances. The OECD Model would prohibit taxation that is "other than or more burdensome" than that imposed on U.S. persons. Paragraph 1 omits the words "other than or" because the only relevant question under this provision should be whether the requirement imposed on a national of the other Contracting State is more burdensome. A requirement may be different from the requirements imposed on U.S. nationals without being more burdensome.

The term "national" in relation to a Contracting State is defined in subparagraph 1(k) of Article III (General Definitions). The term includes both individuals and juridical persons. A national of a Contracting State is afforded protection under this paragraph even if the national is not a resident of either Contracting State. Thus, a U.S. citizen who is resident in a third country is entitled, under this paragraph, to the same treatment in Canada as a national of Canada in the same or similar circumstances (i.e., one who is resident in a third State).

Whether or not the two persons are both taxable on worldwide income is a significant circumstance for this purpose. For this reason, paragraph 1 specifically refers to taxation or any requirement connected therewith, particularly with respect to taxation on worldwide income, as relevant circumstances. This language means that the United States is not obliged to apply the same taxing regime to a national of Canada who is not resident in the United States as it applies to a U.S. national who is not resident in the United States. U.S. citizens who are not resident in the United States but who are, nevertheless, subject to U.S. tax on their worldwide income are not in the same circumstances with respect to U.S. taxation as citizens of Canada who are not U.S. residents. Thus, for example, Article XXV would not entitle a national of Canada residing in a third country to taxation at graduated rates on U. S.-source dividends or other investment income that applies to a U.S. citizen residing in the same third country.

Because of the increased coverage of paragraph 1 with respect to the treatment of nationals wherever they are resident, paragraph 2 of this Article no longer has application, and therefore has been omitted.

Paragraph 3

Paragraph 3 makes changes to renumbered paragraph 3 of Article XXV in order to conform with Article 10 of the Protocol by deleting the reference to "Article XV (Dependent Personal Services)" and replacing it with a reference to "Article XV (Income from Employment)."

ARTICLE 21

Paragraph 1 of Article 21 of the Protocol replaces paragraph 6 of Article XXVI (Mutual Agreement Procedure) of the Convention with new paragraphs 6 and 7. New paragraphs 6 and 7 provide a mandatory binding arbitration proceeding (Arbitration Proceeding). The Arbitration Note details additional rules and procedures that apply to a case considered under the arbitration provisions.

New paragraph 6 provides that a case shall be resolved through arbitration when the competent authorities have endeavored but are unable through negotiation to reach a complete agreement regarding a case and the following three conditions are satisfied. First, tax returns have been filed with at least one of the Contracting States with respect to the taxable years at issue in the case. Second, the case (i) involves the application of one or more Articles that the competent authorities have agreed in an exchange of notes shall be the subject of arbitration and is not a case that the competent authorities agree before the date on which an Arbitration Proceeding would otherwise have begun, is not suitable for determination by arbitration; or (ii) is a case that the competent authorities agree is suitable for determination by arbitration. Third, all concerned persons and their authorized representatives agree, according to the provisions of subparagraph 7(d), not to disclose to any other person any information received during the course of the Arbitration Proceeding from either Contracting State or the arbitration board, other than the determination of the board (confidentiality agreement). The confidentiality agreement may also be executed by any concerned person that has the legal authority to bind any other concerned person on the matter. For example, a parent corporation with the legal authority to bind its subsidiary with respect to confidentiality may execute a comprehensive confidentiality agreement on its own behalf and that of its subsidiary.

The United States and Canada have agreed in the Arbitration Note to submit cases regarding the application of one or more of the following Articles to mandatory binding arbitration under the provisions of paragraphs 6 and 7 of Article XXVI: IV (Residence), but only insofar as it relates to the residence of a natural person, V (Permanent Establishment), VII (Business Profits), IX (Related Persons), and XII (Royalties) (but only (i) insofar as Article XII might apply in transactions involving related persons to whom Article IX might apply, or (ii) to an allocation of amounts between royalties that are taxable under paragraph 2 thereof and royalties that are exempt under paragraph 3 thereof). The competent authorities may, however, agree, before the date on which an Arbitration Proceeding would otherwise have begun, that a particular case is not suitable for arbitration.

New paragraph 7 provides six subparagraphs that detail the general rules and definitions to be used in applying the arbitration provisions.

Subparagraph 7(a) provides that the term "concerned person" means the person that brought the case to competent authority for consideration under Article XXVI (Mutual Agreement Procedure) and includes all other persons, if any, whose tax liability to either Contracting State may be directly affected by a mutual agreement arising from that consideration. For example, a concerned person does not only include a U.S. corporation that brings a transfer pricing case with respect to a transaction entered into with its Canadian subsidiary for resolution to the U.S. competent authority, but also the Canadian subsidiary, which may have a correlative adjustment as a result of the resolution of the case.

Subparagraph 7(c) provides that an Arbitration Proceeding begins on the later of two dates: two years from the "commencement date" of the case (unless the competent authorities have previously agreed to a different date), or the earliest date upon which all concerned persons have entered into a confidentiality agreement and the agreements have been received by both competent authorities. The "commencement date" of the case is defined by subparagraph 7(b) as the earliest date the information necessary to undertake substantive consideration for a mutual agreement has been received by both competent authorities.

Paragraph 16 of the Arbitration Note provides that each competent authority will confirm in writing to the other competent authority and to the concerned persons the date of its receipt of the information necessary to undertake substantive consideration for a mutual agreement. In the case of the United States, this information is (i) the information that must be submitted to the U.S. competent authority under Section 4.05 of Rev. Proc. 2006–54, 2006–49 I.R.B. 1035 (or any applicable successor publication), and (ii) for cases initially submitted as a request for an Advance Pricing Agreement, the information that must be submitted to the Internal Revenue Service under Rev. Proc. 2006–9, 2006–2 I.R.B. 278 (or any applicable successor publication). In the case of Canada, this information is the information required to be submitted to the Canadian competent authority under Information Circular 7 1–17 (or any applicable successor publication). The information shall not be considered received until both competent authorities have received copies of all materials submitted to either Contracting State by the concerned person(s) in connection with the mutual agreement procedure. It is understood that confirmation of the "information necessary to undertake substantive consideration for a mutual agreement" is envisioned to ordinarily occur within 30 days after the necessary information is provided to the competent authority.

The Arbitration Note also provides for several procedural rules once an Arbitration Proceeding under paragraph 6 of Article XXVI ("Proceeding") has commenced, but the competent authorities may modify or supplement these rules as necessary. In addition, the arbitration board may adopt any procedures necessary for the conduct of its business, provided the procedures are not inconsistent with any provision of Article XXVI of the Convention.

Paragraph 5 of the Arbitration Note provides that each Contracting State has 60 days from the date on which the Arbitration Proceeding begins to send a written communication to the other Contracting State appointing one member of the arbitration board. Within 60 days of the date the second of such communications is sent, these two board members will appoint a third member to serve as the chair of the board. It is agreed that this third member ordinarily should not be a citizen of either of the Contracting States.

In the event that any members of the board are not appointed (including as a result of the failure of the two members appointed by the Contracting States to agree on a third member) by the requisite date, the remaining members are appointed by the highest ranking member of the Secretariat at the Centre for Tax Policy and Administration of the Organisation for Economic Co-operation and Development (OECD) who is not a citizen of either Contracting State, by written notice to both Contracting States within 60 days of the date of such failure.

Paragraph 7 of the Arbitration Note establishes deadlines for submission of materials by the Contracting States to the arbitration board. Each competent authority has 60 days from the date of appointment of the chair to submit a Proposed Resolution describing the proposed disposition of the specific monetary amounts of income, expense or taxation at issue in the case, and a supporting Position Paper. Copies of each State's submissions are to be provided by the board to the other Contracting State on the date the later of the submissions is submitted to the board. Each of the Contracting States may submit a Reply Submission to the board within 120 days of the appointment of the chair to address points raised in the other State's Proposed Resolution or Position Paper. If one Contracting State fails to submit a Proposed Resolution within the requisite time, the Proposed Resolution of the other Contracting State is deemed to be the determination of the arbitration board. Additional information may be supplied to the arbitration board by a Contracting State only at the request of the arbitration board. The board will providecopies of any such requested information, along with the board's request, to the other Contracting State on the date the request is made or the response is received.

All communication with the board is to be in writing between the chair of the board and the designated competent authorities with the exception of communication regarding logistical matters.

In making its determination, the arbitration board will apply the following authorities as necessary: (i) the provisions of the Convention, (ii) any agreed commentaries or explanation of the Contracting States concerning the Convention as amended, (iii) the laws of the Contracting States to the extent they are not inconsistent with each other, and (iv) any OECD Commentary, Guidelines or Reports regarding relevant analogous portions of the OECD Model Tax Convention.

The arbitration board must deliver a determination in writing to the Contracting States within six months of the appointment of the chair. The determination must be one of the two Proposed Resolutions submitted by the Contracting States. The determination shall provide a determination regarding only the amount of income, ex-

pense or tax reportable to the Contracting States. The determination has no precedential value and consequently the rationale behind a board's determination would not be beneficial and shall not be provided by the board.

Paragraph 11 of the Arbitration Note provides that, unless any concerned person does not accept the decision of the arbitration board, the determination of the board constitutes a resolution by mutual agreement under Article XXVI and, consequently, is binding on both Contracting States. Each concerned person must, within 30 days of receiving the determination from the competent authority to which the case was first presented, advise that competent authority whether the person accepts the determination. The failure to advise the competent authority within the requisite time is considered a rejection of the determination. If a determination is rejected, the case cannot be the subject of a subsequent MAP procedure on the same issue(s) determined by the panel, including a subsequent Arbitration Proceeding. After the commencement of an Arbitration Proceeding but before a decision of the board has been accepted by all concerned persons, the competent authorities may reach a mutual agreement to resolve the case and terminate the Proceeding.

For purposes of the Arbitration Proceeding, the members of the arbitration board and their staffs shall be considered "persons or authorities" to whom information may be disclosed under Article XXVII (Exchange of Information). The Arbitration Note provides that all materials prepared in the course of, or relating to, the Arbitration Proceeding are considered information exchanged between the Contracting States. No information relating to the Arbitration Proceeding or the board's determination may be disclosed by members of the arbitration board or their staffs or by either competent authority, except as permitted by the Convention and the domestic laws of the Contracting States. Members of the arbitration board and their staffs must agree in statements sent to each of the Contracting States in confirmation of their appointment to the arbitration board to abide by and be subject to the confidentiality and nondisclosure provisions of Article XXVII of the Convention and the applicable domestic laws of the Contracting States, with the most restrictive of the provisions applying.

The applicable domestic law of the Contracting States determines the treatment of any interest or penalties associated with a competent authority agreement achieved through arbitration.

In general, fees and expenses are borne equally by the Contracting States, including the cost of translation services. However, meeting facilities, related resources, financial management, other logistical support, and general and administrative coordination of the Arbitration Proceeding will be provided, at its own cost, by the Contracting State that initiated the Mutual Agreement Procedure. The fees and expenses of members of the board will be set in accordance with the International Centre for Settlement of Investment Disputes (ICSID) Schedule of Fees for arbitrators (in effect on the date on which the arbitration board proceedings begin). All other costs are to be borne by the Contracting State that incurs them. Since arbitration of MAP cases is intended to assist taxpayers in resolving a governmental difference of opinion regarding

the taxation of their income, and is merely an extension of the competent authority process, no fees will be chargeable to a taxpayer in connection with arbitration.

ARTICLE 22

Article 22 of the Protocol amends Article XXVI A (Assistance in Collection) of the existing Convention. Article XXVI A sets forth provisions under which the United States and Canada have agreed to assist each other in the collection of taxes.

Paragraph 1

Paragraph 1 replaces subparagraph 8(a) of Article XXVI A. In general, new subparagraph 8(a) provides the circumstances under which no assistance is to be given under the Article for a claim in respect of an individual taxpayer. New subparagraph 8(a) contains language that is in substance the same as subparagraph 8(a) of Article XXVI A of the existing Convention. However, the revised subparagraph also provides that no assistance in collection is to be given for a revenue claim from a taxable period that ended before November 9, 1995 in respect of an individual taxpayer, if the taxpayer became a citizen of the requested State at any time before November 9, 1995 and is such a citizen at the time the applicant State applies for collection of the claim.

The additional language is intended to avoid the potentially discriminating application of former subparagraph 8(a) as applied to persons who were not citizens of the requested State in the taxable period to which a particular collection request related, but who became citizens of the requested State at a time prior to the entry into force of Article XXVI A as set forth in the third protocol signed March 17, 1995. New subparagraph 8(a) addresses this situation by treating the citizenship of a person in the requested State at anytime prior to November 9, 1995 as comparable to citizenship in the requested State during the period for which the claim for assistance relates if 1) the person is a citizen of the requested state at the time of the request for assistance in collection, and 2) the request relates to a taxable period ending prior to November 9, 1995. As is provided in subparagraph 3(g) of Article 27, this change will have effect for revenue claims finally determined after November 9, 1985, the effective date of the adoption of collection assistance in the third protocol signed March 17, 1995.

Paragraph 2

Paragraph 2 replaces paragraph 9 of Article XXVI A of the Convention. Under paragraph 1 of Article XXVI A, each Contracting State generally agrees to lend assistance and support to the other in the collection of revenue claims. The term "revenue claim" is defined in paragraph 1 to include all taxes referred to in paragraph 9 of the Article, as well as interest, costs, additions to such taxes, and civil penalties. New paragraph 9 provides that, notwithstanding the provisions of Article II (Taxes Covered) of the Convention, Article XXVI A shall apply to all categories of taxes collected, and to contributions to social security and employment insurance premiums levied, by or on behalf of the Government of a Contracting State. Prior to the Protocol, paragraph 9 did not contain

a specific reference to contributions to social security and employment insurance premiums. Although the prior language covered U.S. federal social security and unemployment taxes, the language did not cover Canada's social security (e.g., Canada Pension Plan) and employment insurance programs, contributions to which are not considered taxes under Canadian law and therefore would not otherwise have come within the scope of the paragraph.

ARTICLE 23

Article 23 of the Protocol replaces Article XXVII (Exchange of Information) of the Convention.

Paragraph 1 of Article XXVI

New paragraph 1 of Article XXVII is substantially the same as paragraph 1 of Article XXVII of the existing Convention. Paragraph 1 authorizes the competent authorities to exchange information as may be relevant for carrying out the provisions of the Convention or the domestic laws of Canada and the United States concerning taxes covered by the Convention, insofar as the taxation under those domestic laws is not contrary to the Convention. New paragraph 1 changes the phrase "is relevant" to "may be relevant" to clarify that the language incorporates the standard in Code section 7602 which authorizes the Internal Revenue Service to examine "any books, papers, records, or other data which may be relevant or material." (Emphasis added.) In United States v. Arthur Young & Co., 465 U.S. 805, 814 (1984), the Supreme Court stated that "the language 'may be' reflects Congress's express intention to allow the Internal Revenue Service to obtain 'items of even potential relevance to an ongoing investigation, without reference to its admissibility."' (Emphasis in original.) However, the language "may be" would not support a request in which a Contracting State simply asked for information regarding all bank accounts maintained by residents of that Contracting State in the other Contracting State, or even all accounts maintained by its residents with respect to a particular bank.

The authority to exchange information granted by paragraph 1 is not restricted by Article I (Personal Scope), and thus need not relate solely to persons otherwise covered by the Convention. Under paragraph 1, information may be exchanged for use in all phases of the taxation process including assessment, collection, enforcement or the determination of appeals. Thus, the competent authorities may request and provide information for cases under examination or criminal investigation, in collection, on appeals, or under prosecution.

Any information received by a Contracting State pursuant to the Convention is to be treated as secret in the same manner as information obtained under the tax laws of that State. Such information shall be disclosed only to persons or authorities, including courts and administrative bodies, involved in the assessment or collection of, the administration and enforcement in respect of, or the determination of appeals in relation to, the taxes covered by the Convention and the information may be used by such persons only for such purposes. (In accordance with paragraph 4, for the purposes of this Article the Convention applies to a broader range of taxes

than those covered specifically by Article II (Taxes Covered)). Although the information received by persons described in paragraph 1 is to be treated as secret, it may be disclosed by such persons in public court proceedings or in judicial decisions.

Paragraph 1 also permits, however, a Contracting State to provide information received from the other Contracting State to its states, provinces, or local authorities, if it relates to a tax imposed by that state, province, or local authority that is substantially similar to a national-level tax covered under Article II (Taxes Covered). This provision does not authorize a Contracting State to request information on behalf of a state, province, or local authority. Paragraph 1 also authorizes the competent authorities to release information to any arbitration panel that may be established under the provisions of new paragraph 6 of Article XXVI (Mutual Agreement Procedure). Any information provided to a state, province, or local authority or to an arbitration panel is subject to the same use and disclosure provisions as is information received by the national Governments and used for their purposes.

The provisions of paragraph 1 authorize the U.S. competent authority to continue to allow legislative bodies, such as the tax-writing committees of Congress and the Government Accountability Office to examine tax return information received from Canada when such bodies or offices are engaged in overseeing the administration of U.S. tax laws or a study of the administration of U.S. tax laws pursuant to a directive of Congress. However, the secrecy requirements of paragraph 1 must be met.

It is contemplated that Article XXVII will be utilized by the competent authorities to exchange information upon request, routinely, and spontaneously.

Paragraph 2 of Article XXVI

New paragraph 2 conforms with the corresponding U.S. and OECD Model provisions. The substance of the second sentence of former paragraph 2 is found in new paragraph 6 of the Article, discussed below.

Paragraph 2 provides that if a Contracting State requests information in accordance with Article XXVII, the other Contracting State shall use its information gathering measures to obtain the requested information. The instruction to the requested State to "use its information gathering measures" to obtain the requested information communicates the same instruction to the requested State as the language of former paragraph 2 that stated that the requested State shall obtain the information "in the same way as if its own taxation was involved." Paragraph 2 makes clear that the obligation to provide information is limited by the provisions of paragraph 3, but that such limitations shall not be construed to permit a Contracting State to decline to obtain and supply information because it has no domestic tax interest in such information.

In the absence of such a paragraph, some taxpayers have argued that subparagraph 3(a) prevents a Contracting State from requesting information from a bank or fiduciary that the Contracting State does not need for its own tax purposes. This paragraph clarifies that paragraph 3 does not impose such a restriction and that a

Contracting State is not limited to providing only the information that it already has in its own files.

Paragraph 3 of Article XXVI

New paragraph 3 is substantively the same as paragraph 3 of Article XXVII of the existing Convention. Paragraph 3 provides that the provisions of paragraphs 1 and 2 do not impose on Canada or the United States the obligation to carry out administrative measures at variance with the laws and administrative practice of either State; to supply information which is not obtainable under the laws or in the normal course of the administration of either State; or to supply information which would disclose any trade, business, industrial, commercial, or professional secret or trade process, or information the disclosure of which would be contrary to public policy.

Thus, a requesting State may be denied information from the other State if the information would be obtained pursuant to procedures or measures that are broader than those available in the requesting State. However, the statute of limitations of the Contracting State making the request for information should govern a request for information. Thus, the Contracting State of which the request is made should attempt to obtain the information even if its own statute of limitations has passed. In many cases, relevant information will still exist in the business records of the taxpayer or a third party, even though it is no longer required to be kept for domestic tax purposes.

While paragraph 3 states conditions under which a Contracting State is not obligated to comply with a request from the other Contracting State for information, the requested State is not precluded from providing such information, and may, at its discretion, do so subject to the limitations of its internal law.

As discussed with respect to paragraph 2, in no case shall the limitations in paragraph 3 be construed to permit a Contracting State to decline to obtain information and supply information because it has no domestic tax interest in such information.

Paragraph 4 of Article XXVI

The language of new paragraph 4 is substantially similar to former paragraph 4. New paragraph 4, however, consistent with new paragraph 1, discussed above, replaces the words "is relevant" with "may be relevant" in subparagraph 4(b).

Paragraph 4 provides that, for the purposes of Article XXVII, the Convention applies to all taxes imposed by a Contracting State, and to other taxes to which any other provision of the Convention applies, but only to the extent that the information may be relevant for the purposes of the application of that provision.

Article XXVII does not apply to taxes imposed by political subdivisions or local authorities of the Contracting States. Paragraph 4 is designed to ensure that information exchange will extend to taxes of every kind (including, for example, estate, gift, excise, and value added taxes) at the national level in the United States and Canada.

Paragraph 5 of Article XXVI

New paragraph 5 conforms with the corresponding U.S. and OECD Model provisions. Paragraph 5 provides that a Contracting State may not decline to provide information because that information is held by a financial institution, nominee or person acting in an agency or fiduciary capacity. Thus, paragraph 5 would effectively prevent a Contracting State from relying on paragraph 3 to argue that its domestic bank secrecy laws (or similar legislation relating to disclosure of financial information by financial institutions or intermediaries) override its obligation to provide information under paragraph 1. This paragraph also requires the disclosure of information regarding the beneficial owner of an interest in a person.

Paragraph 6 of Article XXVI

The substance of new paragraph 6 is similar to the second sentence of paragraph 2 of Article XXVII of the existing Convention. New paragraph 6 adopts the language of paragraph 6 of Article 26 (Exchange of Information and Administrative Assistance) of the U.S. Model. New paragraph 6 provides that the requesting State may specify the form in which information is to be provided (e.g., depositions of witnesses and authenticated copies of original documents). The intention is to ensure that the information may be introduced as evidence in the judicial proceedings of the requesting State.

The requested State should, if possible, provide the information in the form requested to the same extent that it can obtain information in that form under its own laws and administrative practices with respect to its own taxes.

Paragraph 7 of Article XXVI

New paragraph 7 is consistent with paragraph 8 of Article 26 (Exchange of Information and Administrative Assistance) of the U.S. Model. Paragraph 7 provides that the requested State shall allow representatives of the requesting State to enter the requested State to interview individuals and examine books and records with the consent of the persons subject to examination. Paragraph 7 was intended to reinforce that the administrations can conduct consensual tax examinations abroad, and was not intended to limit travel or supersede any arrangements or procedures the competent authorities may have previously had in place regarding travel for tax administration purposes.

Paragraph 13 of General Note

As is explained in paragraph 13 of the General Note, the United States and Canada understand and agree that the standards and practices described in Article XXVII of the Convention are to be in no respect less effective than those described in the Model Agreement on Exchange of Information on Tax Matters developed by the OECD Global Forum Working Group on Effective Exchange of Information.

ARTICLE 24

Article 24 amends Article XXIX (Miscellaneous Rules) of the Convention. Paragraph 1

Paragraph 1 replaces paragraph 2 of Article XXIX of the existing Convention. New paragraph 2 is divided into two subparagraphs. In general, subparagraph 2(a) provides a "saving clause" pursuant to which the United States and Canada may each tax its residents, as determined under Article IV (Residence), and the United States may tax its citizens and companies, including those electing to be treated as domestic corporations (e.g. under Code section 1504(d)), as if there were no convention between the United States and Canada with respect to taxes on income and capital. Subparagraph 2(a) contains language that generally corresponds to former paragraph 2, but omits certain language pertaining to former citizens, which are addressed in new subparagraph 2(b).

New subparagraph 2(b) generally corresponds to the provisions of former paragraph 2 addressing former citizens of the United States. However, new subparagraph 2(b) also includes a reference to former long-term residents of the United States. This addition, as well as other changes in subparagraph 2(b), brings the Convention in conformity with the U.S. taxation of former citizens and long-term residents under Code section 877.

Similar to subparagraph 2(a), new subparagraph 2(b) operates as a "saving clause" and provides that notwithstanding the other provisions of the Convention, a former citizen or former long-term resident of the United States, may, for a period of ten years following the loss of such status, be taxed in accordance with the laws of the United States with respect to income from sources within the United States (including income deemed under the domestic law of the United States to arise from such sources).

Paragraphs 11 and 12 of the General Note provide definitions based on Code section 877 that are relevant to the application of paragraph 2 of Article XXIX. Paragraph 11 of the General Note provides that the term "long-term resident" means any individual who is a lawful permanent resident of the United States in eight or more taxable years during the preceding 15 taxable years. In determining whether the eight-year threshold is met, one does not count any year in which the individual is treated as a resident of Canada under this Convention (or as a resident of any country other than the United States under the provisions of any other U.S. tax treaty), and the individual does not waive the benefits of such treaty applicable to residents of the other country. This understanding is consistent with how this provision is generally interpreted in U.S. tax treaties.

Paragraph 12 of the General Note provides that the phrase "income deemed under the domestic law of the United States to arise from such sources" as used in new subparagraph 2(b) includes gains from the sale or exchange of stock of a U.S. company or debt obligations of a U.S. person, the United States, a State, or a political subdivision thereof, or the District of Columbia, gains from property (other than stock or debt obligations) located in the United States, and, in certain cases, income or gain derived from the sale of stock of a non-U.S. company or a disposition of property

contributed to such non-U.S. company where such company would be a controlled foreign corporation with respect to the individual if such person had continued to be a U.S. person. In addition, an individual who exchanges property that gives rise or would give rise to U.S.-source income for property that gives rise to foreign-source income will be treated as if he had sold the property that would give rise to U.S.-source income for its fair market value, and any consequent gain shall be deemed to be income from sources within the United States.

Paragraph 2

Paragraph 2 replaces subparagraph 3(a) of Article XXIX of the existing Convention. Paragraph 3 provides that, notwithstanding paragraph 2 of Article XXIX, the United States and Canada must respect specified provisions of the Convention in regard to certain persons, including residents and citizens. Therefore, subparagraph 3(a) lists certain paragraphs and Articles of the Convention that represent exceptions to the "saving clause" in all situations. New subparagraph 3(a) is substantially similar to former subparagraph 3(a), but now contains a reference to paragraphs 8, 10, and 13 of Article XVIII (Pensions and Annuities) to reflect the changes made to that article in paragraph 3 of Article 13 of the Protocol.

ARTICLE 25

Article 25 of the Protocol replaces Article XXIX A (Limitation on Benefits) of the existing Convention, which was added to the Convention by the Protocol done on March 17, 1995. Article XXIX A addresses the problem of "treaty shopping" by residents of third States by requiring, in most cases, that the person seeking benefits not only be a U.S. resident or Canadian resident but also satisfy other tests. For example, a resident of a third State might establish an entity resident in Canada for the purpose of deriving income from the United States and claiming U.S. treaty benefits with respect to that income. Article XXIX A limits the benefits granted by the United States or Canada under the Convention to those persons whose residence in the other Contracting State is not considered to have been motivated by the existence of the Convention. As replaced by the Protocol, new Article XXIX A is reciprocal, and many of the changes to the former paragraphs of Article XXIX A are made to effectuate this reciprocal application.

Absent Article XXIX A, an entity resident in one of the Contracting States would be entitled to benefits under the Convention, unless it were denied such benefits as a result of limitations under domestic law (e.g., business purpose, substance-over-form, step transaction, or conduit principles or other anti-avoidance rules) applicable to a particular transaction or arrangement. As noted below in the explanation of paragraph 7, general anti-abuse provisions of this sort apply in conjunction with the Convention in both the United States and Canada. In the case of the United States, such anti-abuse provisions complement the explicit anti-treaty-shopping rules of Article XXIX A. While the anti-treaty-shopping rules determine whether a person has a sufficient nexus to Canada to be entitled to benefits under the Convention, the anti-abuse provisions under U.S. domestic law determine whether a particular trans-

action should be recast in accordance with the substance of the transaction.

Paragraph 1 of Article XXIX A

New paragraph 1 of Article XXIX A provides that, for the purposes of the application of the Convention, a "qualifying person" shall be entitled to all of the benefits of the Convention and, except as provided in paragraphs 3, 4, and 6, a person that is not a qualifying person shall not be entitled to any benefits of the Convention.

Paragraph 2 of Article XXIX A

New paragraph 2 lists a number of characteristics any one of which will make a United States or Canadian resident a qualifying person. The "look-through" principles introduced by the Protocol (e.g. paragraph 6 of Article IV (Residence)) are to be applied in conjunction with Article XXIX A. Accordingly, the provisions of Article IV shall determine the person who derives an item of income, and the objective tests of Article XXIX A shall be applied to that person to determine whether benefits shall be granted. The rules are essentially mechanical tests and are discussed below.

Individuals and governmental entities

Under new paragraph 2, the first two categories of qualifying persons are (1) natural persons resident in the United States or Canada (as listed in subparagraph 2(a)), and (2) the Contracting States, political subdivisions or local authorities thereof, and any agency or instrumentality of such Government, political subdivision or local authority (as listed in subparagraph 2(b)). Persons falling into these two categories are unlikely to be used, as the beneficial owner of income, to derive benefits under the Convention on behalf of a third-country person. If such a person receives income as a nominee on behalf of a third-country resident, benefits will be denied with respect to those items of income under the articles of the Convention that would otherwise grant the benefit, because of the requirements in those articles that the beneficial owner of the income be a resident of a Contracting State.

Publicly traded entities

Under new subparagraph 2(c), a company or trust resident in a Contracting State is a qualifying person if the company's principal class of shares, and any disproportionate class of shares, or the trust's units, or disproportionate interest in a trust, are primarily and regularly traded on one or more recognized stock exchanges. The term "recognized stock exchange" is defined in subparagraph 5(f) of the Article to mean, in the United States, the NASDAQ System and any stock exchange registered as a national securities exchange with the Securities and Exchange Commission, and, in Canada, any Canadian stock exchanges that are "prescribed stock exchanges" or "designated stock exchanges" under the Income Tax Act. These are, at the time of signature of the Protocol, the Montreal Stock Exchange, the Toronto Stock Exchange, and Tiers 1 and 2 of the TSX Venture Exchange. Additional exchanges may be added to the list of recognized exchanges by exchange of notes be-

tween the Contracting States or by agreement between the competent authorities.

If a company has only one class of shares, it is only necessary to consider whether the shares of that class meet the relevant trading requirements. If the company has more than one class of shares, it is necessary as an initial matter to determine which class or classes constitute the "principal class of shares." The term "principal class of shares" is defined in subparagraph 5(e) of the Article to mean the ordinary or common shares of the company representing the majority of the aggregate voting power and value of the company. If the company does not have a class of ordinary or common shares representing the majority of the aggregate voting power and value of the company, then the "principal class of shares" is that class or any combination of classes of shares that represents, in the aggregate, a majority of the voting power and value of the company. Although in a particular case involving a company with several classes of shares it is conceivable that more than one group of classes could be identified that account for more than 50% of the voting power and value of the shares of the company, it is only necessary for one such group to satisfy the requirements of this subparagraph in order for the company to be entitled to benefits. Benefits would not be denied to the company even if a second, non-qualifying, group of shares with more than half of the company's voting power and value could be identified.

A company whose principal class of shares is regularly traded on a recognized stock exchange will nevertheless not qualify for benefits under subparagraph 2(c) if it has a disproportionate class of shares that is not regularly traded on a recognized stock exchange. The term "disproportionate class of shares" is defined in subparagraph 5(b) of the Article. A company has a disproportionate class of shares if it has outstanding a class of shares which is subject to terms or other arrangements that entitle the holder to a larger portion of the company's income, profit, or gain in the other Contracting State than that to which the holder would be entitled in the absence of such terms or arrangements. Thus, for example, a company has a disproportionate class of shares if it has outstanding a class of "tracking stock" that pays dividends based upon a formula that approximates the company's return on its assets employed in the United States. Similar principles apply to determine whether or not there are disproportionate interests in a trust.

The following example illustrates the application of subparagraph 5(b).

Example. OCo is a corporation resident in Canada. OCo has two classes of shares: Common and Preferred. The Common shares are listed and regularly traded on a designated stock exchange in Canada. The Preferred shares have no voting rights and are entitled to receive dividends equal in amount to interest payments that OCo receives from unrelated borrowers in the United States. The Preferred shares are owned entirely by a single investor that is a resident of a country with which the United States does not have a tax treaty. The Common shares account for more than 50 percent of the value of OCo and for 100 percent of the voting power. Because the owner of the Preferred shares is entitled to receive payments corresponding to the U.S.-source interest income earned by

OCo, the Preferred shares are a disproportionate class of shares. Because the Preferred shares are not primarily and regularly traded on a recognized stock exchange, OCo will not qualify for benefits under subparagraph 2(c).

The term "regularly traded" is not defined in the Convention. In accordance with paragraph 2 of Article III (General Definitions) and paragraph 1 of the General Note, this term will be defined by reference to the domestic tax laws of the State from which benefits of the Convention are sought, generally the source State. In the case of the United States, this term is understood to have the meaning it has under Treas. Reg. section 1.884–5(d)(4)(i)(B), relating to the branch tax provisions of the Code, as may be amended from time to time. Under these regulations, a class of shares is considered to be "regularly traded" if two requirements are met: trades in the class of shares are made in more than de minimis quantities on at least 60 days during the taxable year, and the aggregate number of shares in the class traded during the year is at least 10 percent of the average number of shares outstanding during the year. Sections 1. 884–5(d)(4)(i)(A), (ii) and (iii) will not be taken into account for purposes of defining the term "regularly traded" under the Convention.

The regularly-traded requirement can be met by trading on one or more recognized stock exchanges. Therefore, trading may be aggregated for purposes of this requirement. Thus, a U.S. company could satisfy the regularly traded requirement through trading, in whole or in part, on a recognized stock exchange located in Canada. Authorized but unissued shares are not considered for purposes of this test.

The term "primarily traded" is not defined in the Convention. In accordance with paragraph 2 of Article III (General Definitions) and paragraph 1 of the General Note, this term will have the meaning it has under the laws of the State concerning the taxes to which the Convention applies, generally the source State. In the case of the United States, this term is understood to have the meaning it has under Treas. Reg. section 1.884–5(d)(3), as may be amended from time to time, relating to the branch tax provisions of the Code. Accordingly, stock of a corporation is "primarily traded" if the number of shares in the company's principal class of shares that are traded during the taxable year on all recognized stock exchanges exceeds the number of shares in the company's principal class of shares that are traded during that year on all other established securities markets.

Subject to the adoption by Canada of other definitions, the U.S. interpretation of "regularly traded" and "primarily traded" will be considered to apply, with such modifications as circumstances require, under the Convention for purposes of Canadian taxation.

Subsidiaries of publicly traded entities

Certain companies owned by publicly traded corporations also may be qualifying persons. Under subparagraph 2(d), a company resident in the United States or Canada will be a qualifying person, even if not publicly traded, if more than 50 percent of the vote and value of its shares, and more than 50 percent of the vote and value of each disproportionate class of shares, is owned (directly or

indirectly) by five or fewer persons that are qualifying persons under subparagraph 2(c). In addition, each company in the chain of ownership must be a qualifying person. Thus, for example, a company that is a resident of Canada, all the shares of which are owned by another company that is a resident of Canada, would qualify for benefits of the Convention if the principal class of shares (and any disproportionate classes of shares) of the parent company are regularly and primarily traded on a recognized stock exchange. However, such a subsidiary would not qualify for benefits under subparagraph 2(d) if the publicly traded parent company were a resident of a third state, for example, and not a resident of the United States or Canada. Furthermore, if a parent company qualifying for benefits under subparagraph 2(c) indirectly owned the bottom-tier company through a chain of subsidiaries, each subsidiary in the chain, as an intermediate owner, must be a qualifying person in order for the bottom-tier subsidiary to meet the test in subparagraph 2(d).

Subparagraph 2(d) provides that a subsidiary can take into account ownership by as many as five companies, each of which qualifies for benefits under subparagraph 2(c) to determine if the subsidiary qualifies for benefits under subparagraph 2(d). For example, a Canadian company that is not publicly traded but that is owned, one-third each, by three companies, two of which are Canadian resident corporations whose principal classes of shares are primarily and regularly traded on a recognized stock exchange, will qualify under subparagraph 2(d).

By applying the principles introduced by the Protocol (e.g. paragraph 6 of Article IV) in the context of this rule, one "looks through" entities in the chain of ownership that are viewed as fiscally transparent under the domestic laws of the State of residence (other than entities that are resident in the State of source).

The 50-percent test under subparagraph 2(d) applies only to shares other than "debt substitute shares." The term "debt substitute shares" is defined in subparagraph 5(a) to mean shares defined in paragraph (e) of the definition in the Canadian Income Tax Act of "term preferred shares" (see subsection 248(1) of the Income Tax Act), which relates to certain shares received in debt-restructuring arrangements undertaken by reason of financial difficulty or insolvency. Subparagraph 5(a) also provides that the competent authorities may agree to treat other types of shares as debt substitute shares.

Ownership/base erosion test

Subparagraph 2(e) provides a two-part test under which certain other entities may be qualifying persons, based on ownership and lack of "base erosion." A company resident in the United States or Canada will satisfy the first of these tests if 50 percent or more of the vote and value of its shares and 50 percent or more of the vote and value of each disproportionate class of shares, in both cases not including debt substitute shares, is not owned, directly or indirectly, by persons other than qualifying persons. Similarly, a trust resident in the United States or Canada will satisfy this first test if 50 percent or more of its beneficial interests, and 50 percent or more of each disproportionate interest, is not owned, directly or in-

directly, by persons other than qualifying persons. The wording of these tests is intended to make clear that, for example, if a Canadian company is more than 50 percent owned, either directly or indirectly (including cumulative indirect ownership through a chain of entities), by a U.S. resident corporation that is, itself, wholly owned by a third-country resident other than a qualifying person, the Canadian company would not pass the ownership test. This is because more than 50 percent of its shares is owned indirectly by a person (the third-country resident) that is not a qualifying person.

It is understood by the Contracting States that in determining whether a company satisfies the ownership test described in subparagraph 2(e)(i), a company, 50 percent of more of the aggregate vote and value of the shares of which and 50 percent or more of the vote and value of each disproportionate class of shares (in neither case including debt substitute shares) of which is owned, directly or indirectly, by a company described in subparagraph 2(c) will satisfy the ownership test of subparagraph 2(e)(i). In such case, no further analysis of the ownership of the company described in subparagraph 2(c) is required. Similarly, in determining whether a trust satisfies the ownership test described in subparagraph 2(e)(ii), a trust, 50 percent or more of the beneficial interest in which and 50 percent or more of each disproportionate interest in which, is owned, directly or indirectly, by a trust described in subparagraph (2)(c) will satisfy the ownership test of subparagraph (2)(e)(ii), and no further analysis of the ownership of the trust described in subparagraph 2(c) is required.

The second test of subparagraph 2(e) is the so-called "base erosion" test. A company or trust that passes the ownership test must also pass this test to be a qualifying person under this subparagraph. This test requires that the amount of expenses that are paid or payable by the entity in question, directly or indirectly, to persons that are not qualifying persons, and that are deductible from gross income (with both deductibility and gross income as determined under the tax laws of the State of residence of the company or trust), be less than 50 percent of the gross income of the company or trust. This test is applied for the fiscal period immediately preceding the period for which the qualifying person test is being applied. If it is the first fiscal period of the person, the test is applied for the current period.

The ownership/base erosion test recognizes that the benefits of the Convention can be enjoyed indirectly not only by equity holders of an entity, but also by that entity's obligees, such as lenders, licensors, service providers, insurers and reinsurers, and others. For example, a third-country resident could license technology to a Canadian-owned Canadian corporation to be sub-licensed to a U.S. resident. The U.S.-source royalty income of the Canadian corporation would be exempt from U.S. withholding tax under Article XII (Royalties) of the Convention. While the Canadian corporation would be subject to Canadian corporation income tax, its taxable income could be reduced to near zero as a result of the deductible royalties paid to the third-country resident. If, under a convention between Canada and the third country, those royalties were either exempt from Canadian tax or subject to tax at a low rate, the U.S.

treaty benefit with respect to the U.S.-source royalty income would have flowed to the third-country resident at little or no tax cost, with no reciprocal benefit to the United States from the third country. The ownership/base erosion test therefore requires both that qualifying persons substantially own the entity and that the entity's tax base is not substantially eroded by payments (directly or indirectly) to nonqualifying persons.

For purposes of this subparagraph 2(e) and other provisions of this Article, the term "shares" includes, in the case of a mutual insurance company, any certificate or contract entitling the holder to voting power in the corporation. This is consistent with the interpretation of similar limitation on benefits provisions in other U.S. treaties. In Canada, the principles that are reflected in subsection 256(8.1) of the Income Tax Act will be applied, in effect treating memberships, policies or other interests in a corporation incorporated without share capital as representing an appropriate number of shares.

The look-through principles introduced by the Protocol (e.g. new paragraph 6 of Article IV) are to be taken into account when applying the ownership and base erosion provisions of Article XXIX A. Therefore, one "looks through" an entity that is viewed as fiscally transparent under the domestic laws of the residence State (other than entities that are resident in the source State) when applying the ownership/base erosion test. Assume, for example, that USCo, a company incorporated in the United States, wishes to obtain treaty benefits by virtue of the ownership and base erosion rule. USCo is owned by USLLC, an entity that is treated as fiscally transparent in the United States. USLLC in turn is wholly owned in equal shares by 10 individuals who are residents of the United States. Because the United States views USLLC as fiscally transparent, the 10 U.S. individuals shall be regarded as the owners of USCo for purposes of the ownership test. Accordingly, USCo would satisfy the ownership requirement of the ownership/base erosion test. However, if USLLC were instead owned in equal shares by four U.S. individuals and six individuals who are not residents of either the United States or Canada, USCo would not satisfy the ownership requirement. Similarly, for purposes of the base erosion test, deductible payments made to USLLC will be treated as made to USLLC's owners.

Other qualifying persons

Under new subparagraph 2(f), an estate resident in the United States or Canada is a qualifying person entitled to the benefits of the Convention.

New subparagraphs 2(g) and 2(h) specify the circumstances under which certain types of not-for-profit organizations will be qualifying persons. Subparagraph 2(g) provides that a not-for-profit organization that is resident in the United States or Canada is a qualifying person, and thus entitled to benefits, if more than half of the beneficiaries, members, or participants in the organization are qualifying persons. The term "not-for-profit organization" of a Contracting State is defined in subparagraph 5(d) of the Article to mean an entity created or established in that State that is generally exempt from income taxation in that State by reason of its

not-for-profit status. The term includes charities, private foundations, trade unions, trade associations, and similar organizations.

New subparagraph 2(h) specifies that certain trusts, companies, organizations, or other arrangements described in paragraph 2 of Article XXI (Exempt Organizations) are qualifying persons. To be a qualifying person, the trust, company, organization or other arrangement must be established for the purpose of providing pension, retirement, or employee benefits primarily to individuals who are (or were, within any of the five preceding years) qualifying persons. A trust, company, organization, or other arrangement will be considered to be established for the purpose of providing benefits primarily to such persons if more than 50 percent of its beneficiaries, members, or participants are such persons. Thus, for example, a Canadian Registered Retirement Savings Plan ("RRSP") of a former resident of Canada who is working temporarily outside of Canada would continue to be a qualifying person during the period of the individual's absence from Canada or for five years, whichever is shorter. A Canadian pension fund established to provide benefits to persons employed by a company would be a qualifying person only if most of the beneficiaries of the fund are (or were within the five preceding years) individual residents of Canada or residents or citizens of the United States.

New subparagraph 2(i) specifies that certain trusts, companies, organizations, or other arrangements described in paragraph 3 of Article XXI (Exempt Organizations) are qualifying persons. To be a qualifying person, the beneficiaries of a trust, company, organization or other arrangement must be described in subparagraph 2(g) or 2(h).

The provisions of paragraph 2 are self-executing, unlike the provisions of paragraph 6, discussed below. The tax authorities may, of course, on review, determine that the taxpayer has improperly interpreted the paragraph and is not entitled to the benefits claimed.

Paragraph 3 of Article XXIX A

Paragraph 3 provides an alternative rule, under which a United States or Canadian resident that is not a qualifying person under paragraph 2 may claim benefits with respect to those items of income that are connected with the active conduct of a trade or business in its State of residence.

This is the so-called "active trade or business" test. Unlike the tests of paragraph 2, the active trade or business test looks not solely at the characteristics of the person deriving the income, but also at the nature of the person's activity and the connection between the income and that activity. Under the active trade or business test, a resident of a Contracting State deriving an item of income from the other Contracting State is entitled to benefits with respect to that income if that person (or a person related to that person under the principles of Code section 482, or in the case of Canada, section 251 of the Income Tax Act) is engaged in an active trade or business in the State where it is resident, the income in question is derived in connection with, or is incidental to, that trade or business, and the size of the active trade or business in the residence State is substantial relative to the activity in the

other State that gives rise to the income for which benefits are sought. Further details on the application of the substantiality requirement are provided below.

Income that is derived in connection with, or is incidental to, the business of making or managing investments will not qualify for benefits under this provision, unless those investment activities are carried on with customers in the ordinary course of the business of a bank, insurance company, registered securities dealer, or deposit-taking financial institution.

Income is considered derived "in connection" with an active trade or business if, for example, the income-generating activity in the State is "upstream," "downstream," or parallel to that conducted in the other Contracting State. Thus, for example, if the U.S. activity of a Canadian resident company consisted of selling the output of a Canadian manufacturer or providing inputs to the manufacturing process, or of manufacturing or selling in the United States the same sorts of products that were being sold by the Canadian trade or business in Canada, the income generated by that activity would be treated as earned in connection with the Canadian trade or business. Income is considered "incidental" to a trade or business if, for example, it arises from the short-term investment of working capital of the resident in securities issued by persons in the State of source.

An item of income may be considered to be earned in connection with or to be incidental to an active trade or business in the United States or Canada even though the resident claiming the benefits derives the income directly or indirectly through one or more other persons that are residents of the other Contracting State. Thus, for example, a Canadian resident could claim benefits with respect to an item of income earned by a U.S. operating subsidiary but derived by the Canadian resident indirectly through a wholly-owned U.S. holding company interposed between it and the operating subsidiary. This language would also permit a resident to derive income from the other Contracting State through one or more residents of that other State that it does not wholly own. For example, a Canadian partnership in which three unrelated Canadian companies each hold a one-third interest could form a wholly-owned U.S. holding company with a U.S. operating subsidiary. The "directly or indirectly" language would allow otherwise unavailable treaty benefits to be claimed with respect to income derived by the three Canadian partners through the U.S. holding company, even if the partners were not considered to be related to the U.S. holding company under the principles of Code section 482.

As described above, income that is derived in connection with, or is incidental to, an active trade or business in a Contracting State, must pass the substantiality requirement to qualify for benefits under the Convention. The trade or business must be substantial in relation to the activity in the other Contracting State that gave rise to the income in respect of which benefits under the Convention are being claimed. To be considered substantial, it is not necessary that the trade or business be as large as the income-generating activity. The trade or business cannot, however, in terms of income, assets, or other similar measures, represent only a very small percentage of the size of the activity in the other State.

The substantiality requirement is intended to prevent treaty shopping. For example, a third-country resident may want to acquire a U.S. company that manufactures television sets for worldwide markets; however, since its country of residence has no tax treaty with the United States, any dividends generated by the investment would be subject to a U.S. withholding tax of 30 percent. Absent a substantiality test, the investor could establish a Canadian corporation that would operate a small outlet in Canada to sell a few of the television sets manufactured by the U.S. company and earn a very small amount of income. That Canadian corporation could then acquire the U.S. manufacturer with capital provided by the third-country resident and produce a very large number of sets for sale in several countries, generating a much larger amount of income. It might attempt to argue that the U.S.-source income is generated from business activities in the United States related to the television sales activity of the Canadian parent and that the dividend income should be subject to U.S. tax at the 5 percent rate provided by Article X (Dividends) of the Convention. However, the substantiality test would not be met in this example, so the dividends would remain subject to withholding in the United States at a rate of 30 percent.

It is expected that if a person qualifies for benefits under one of the tests of paragraph 2, no inquiry will be made into qualification for benefits under paragraph 3. Upon satisfaction of any of the tests of paragraph 2, any income derived by the beneficial owner from the other Contracting State is entitled to treaty benefits. Under paragraph 3, however, the test is applied separately to each item of income.

Paragraph 4 of Article XXIX A

Paragraph 4 provides a limited "derivative benefits" test that entitles a company that is a resident of the United States or Canada to the benefits of Articles X (Dividends), XI (Interest), and XII (Royalties), even if the company is not a qualifying person and does not satisfy the active trade or business test of paragraph 3. In general, a derivative benefits test entitles the resident of a Contracting State to treaty benefits if the owner of the resident would have been entitled to the same benefit had the income in question been earned directly by that owner. To qualify under this paragraph, the company must satisfy both the ownership test in subparagraph 4(a) and the base erosion test of subparagraph 4(b).

Under subparagraph 4(a), the derivative benefits ownership test requires that the company's shares representing more than 90 percent of the aggregate vote and value of all of the shares of the company, and at least 50 percent of the vote and value of any disproportionate class of shares, in neither case including debt substitute shares, be owned directly or indirectly by persons each of whom is either (i) a qualifying person or (ii) another person that satisfies each of three tests. The three tests of subparagraph 4(a) that must be satisfied by these other persons are as follows:

First, the other person must be a resident of a third State with which the Contracting State that is granting benefits has a comprehensive income tax convention. The other person must be entitled to all of the benefits under that convention. Thus,

if the person fails to satisfy the limitation on benefits tests, if any, of that convention, no benefits would be granted under this paragraph. Qualification for benefits under an active trade or business test does not suffice for these purposes, because that test grants benefits only for certain items of income, not for all purposes of the convention.

Second, the other person must be a person that would qualify for benefits with respect to the item of income for which benefits are sought under one or more of the tests of paragraph 2 or 3 of Article XXIX A, if the person were a resident of the Contracting State that is not providing benefits for the item of income and, for purposes of paragraph 3, the business were carried on in that State. For example, a person resident in a third country would be deemed to be a person that would qualify under the publicly-traded test of paragraph 2 of Article XXIX A if the principal class of its shares were primarily and regularly traded on a stock exchange recognized either under the Convention between the United States and Canada or under the treaty between the Contracting State granting benefits and the third country. Similarly, a company resident in a third country would be deemed to satisfy the ownership/base erosion test of paragraph 2 under this hypothetical analysis if, for example, it were wholly owned by an individual resident in that third country and the company's tax base were not substantially eroded by payments (directly or indirectly) to nonqualifying persons.

The third requirement is that the rate of tax on the item of income in respect of which benefits are sought must be at least as low under the convention between the person's country of residence and the Contracting State granting benefits as it is under the Convention.

Subparagraph 4(b) sets forth the base erosion test. This test requires that the amount of expenses that are paid or payable by the company in question, directly or indirectly, to persons that are not qualifying persons under the Convention, and that are deductible from gross income (with both deductibility and gross income as determined under the tax laws of the State of residence of the company), be less than 50 percent of the gross income of the company. This test is applied for the fiscal period immediately preceding the period for which the test is being applied. If it is the first fiscal period of the person, the test is applied for the current period. This test is qualitatively the same as the base erosion test of subparagraph 2(e).

Paragraph 5 of Article XXIX AParagraph 5 defines certain terms used in the Article. These terms were identified and discussed in connection with new paragraph 2, above.

Paragraph 6 of Article XXIX A

Paragraph 6 provides that when a resident of a Contracting State derives income from the other Contracting State and is not entitled to the benefits of the Convention under other provisions of the Article, benefits may, nevertheless be granted at the discretion of the competent authority of the other Contracting State. This de-

termination can be made with respect to all benefits under the Convention or on an item by item basis. In making a determination under this paragraph, the competent authority will take into account all relevant facts and circumstances relating to the person requesting the benefits. In particular, the competent authority will consider the history, structure, ownership (including ultimate beneficial ownership), and operations of the person. In addition, the competent authority is to consider (1) whether the creation and existence of the person did not have as a principal purpose obtaining treaty benefits that would not otherwise be available to the person, and (2) whether it would not be appropriate, in view of the purpose of the Article, to deny benefits. If the competent authority of the other Contracting State determines that either of these two standards is satisfied, benefits shall be granted.

For purposes of implementing new paragraph 6, a taxpayer will be permitted to present his case to the competent authority for an advance determination based on a full disclosure of all pertinent information. The taxpayer will not be required to wait until it has been determined that benefits are denied under one of the other provisions of the Article. It also is expected that, if and when the competent authority determines that benefits are to be allowed, they will be allowed retroactively to the time of entry into force of the relevant provision of the Convention or the establishment of the structure in question, whichever is later (assuming that the taxpayer also qualifies under the relevant facts for the earlier period).

Paragraph 7 of Article XXIX A

New paragraph 7 is in substance similar to paragraph 7 of Article XXIX A of the existing Convention and clarifies the application of general anti-abuse provisions. New paragraph 7 provides that paragraphs 1 through 6 of Article XXIX A shall not be construed as limiting in any manner the right of a Contracting State to deny benefits under the Convention where it can reasonably be concluded that to do otherwise would result in an abuse of the provisions of the Convention. This provision permits a Contracting State to rely on general anti-avoidance rules to counter arrangements involving treaty shopping through the other Contracting State.

Thus, Canada may apply its domestic law rules to counter abusive arrangements involving "treaty shopping" through the United States, and the United States may apply its substance-over-form and anti-conduit rules, for example, in relation to Canadian residents. This principle is recognized by the OECD in the Commentaries to its Model Tax Convention on Income and on Capital, and the United States and Canada agree that it is inherent in the Convention. The statement of this principle explicitly in the Protocol is not intended to suggest that the principle is not also inherent in other tax conventions concluded by the United States or Canada.

ARTICLE 26

Article 26 of the Protocol replaces paragraphs 1 and 5 of Article XXIX B (Taxes Imposed by Reason of Death) of the Convention. In

addition, paragraph 7 of the General Note provides certain clarifications for purposes of paragraphs 6 and 7 of Article XXIX B.

Paragraph 1

Paragraph 1 of Article XXIX B of the existing Convention generally addresses the situation where a resident of a Contracting State passes property by reason of the individual's death to an organization referred to in paragraph 1 of Article XXI (Exempt Organizations) of the Convention. The paragraph provided that the tax consequences in a Contracting State arising out of the passing of the property shall apply as if the organization were a resident of that State.

The Protocol replaces paragraph 1, and the changes set forth in new paragraph 1 are intended to specifically address questions that have arisen about the application of former paragraph 1 where property of an individual who is a resident of Canada passes by reason of the individual's death to a charitable organization in the United States that is not a "registered charity" under Canadian law. Under one view, paragraph 1 of Article XXIX B requires Canada to treat the passing of the property as a contribution to a "registered charity" and thus to allow all of the same deductions for Canadian tax purposes as if the U.S. charity had been a "registered charity" under Canadian law. Under another view, paragraph 6 of Article XXI (Exempt Organizations) of the Convention continues to limit the amount of the income tax charitable deduction in Canada to the individual's income arising in the United States. The changes set forth in new paragraph 1 are intended to provide relief from the Canadian tax on gain deemed recognized by reason of death that would otherwise give rise to Canadian tax when the individual passes the property to a charitable organization in the United States, but, for purposes of the separate Canadian income tax, do not eliminate the limitation under paragraph 6 of Article XXI on the amount of the deduction in Canada for the charitable donation to the individual's income arising in the United States.

As revised, paragraph 1 is divided into two subparagraphs. New subparagraph 1(a) applies where property of an individual who is a resident of the United States passes by reason of the individual's death to a qualifying exempt organization that is a resident of Canada. In such case, the tax consequences in the United States arising from the passing of such property apply as if the organization were a resident of the United States. A bequest by a U.S. citizen or U.S. resident (as defined for estate tax purposes under the Code) to an exempt organization generally is deductible for U.S. federal estate tax purposes under Code section 2055, without regard to whether the organization is a U.S. corporation. Thus, generally, the individual's estate will be entitled to a charitable deduction for Federal estate tax purposes equal to the value of the property transferred to the organization. Generally, the effect is that no Federal estate tax will be imposed on the value of the property.

New subparagraph 1(b) applies where property of an individual who is a resident of Canada passes by reason of the individual's death to a qualifying exempt organization that is a resident of the United States. In such case, for purposes of the Canadian capital gains tax imposed at death, the tax consequences arising out of the

passing of the property shall apply as if the individual disposed of the property for proceeds equal to an amount elected on behalf of the individual. For this purpose, the amount elected shall be no less than the individual's cost of the property as determined for purposes of Canadian tax, and no greater than the fair market value of the property. The manner in which the individual's representative shall make this election shall be specified by the competent authority of Canada. Generally, in the event of a full exercise of the election under new subparagraph 1(b), no capital gains tax will be imposed in Canada by reason of the death with regard to that property.

New paragraph 1 does not address the situation in which a resident of one Contracting State bequeaths property with a situs in the other Contracting State to a qualifying exempt organization in the Contracting State of the decedent's residence. In such a situation, the other Contracting State may impose tax by reason of death, for example, if the property is real property situated in that State.

Paragraph 2

Paragraph 2 of Article 26 of the Protocol replaces paragraph 5 of Article XXIX B of the existing Convention. The provisions of new paragraph 5 relate to the operation of Canadian law. Because Canadian law requires both spouses to have been Canadian residents in order to be eligible for the rollover, these provisions are intended to provide deferral ("rollover") of the Canadian tax at death for certain transfers to a surviving spouse and to permit the Canadian competent authority to allow such deferral for certain transfers to a trust. For example, they would enable the competent authority to treat a trust that is a qualified domestic trust for U.S. estate tax purposes as a Canadian spousal trust as well for purposes of certain provisions of Canadian tax law and of the Convention. These provisions do not affect U.S. domestic law regarding qualified domestic trusts. Nor do they affect the status of U.S. resident individuals for any other purpose.

New paragraph 5 adds a reference to subsection 70(5.2) of the Canadian Income Tax Act. This change is needed because the rollover in respect of certain kinds of property is provided in that subsection. Further, new paragraph 5 adds a clause "and with respect to such property" near the end of the second sentence to make it clear that the trust is treated as a resident of Canada only with respect to its Canadian property.

For example, assume that a U.S. decedent with a Canadian spouse sets up a qualified domestic trust holding U.S. and Canadian real property, and that the decedent's executor elects, for Federal estate tax purposes, to treat the entire trust as qualifying for the Federal estate tax marital deduction. Under Canadian law, because the decedent is not a Canadian resident, Canada would impose capital gains tax on the deemed disposition of the Canadian real property immediately before death. In order to defer the Canadian tax that might otherwise be imposed by reason of the decedent's death, under new paragraph 5 of Article XXIX B, the competent authority of Canada shall, at the request of the trustee, treat the trust as a Canadian spousal trust with respect to the Ca-

nadian real property. The effect of such treatment is to defer the tax on the deemed distribution of the Canadian real property until an appropriate triggering event such as the death of the surviving spouse.

Paragraph 7 of the General Note

In addition to the foregoing, paragraph 7 of the General Note provides certain clarifications for purposes of paragraphs 6 and 7 of Article XXIX B. These clarifications ensure that tax credits will be available in cases where there are inconsistencies in the way the two Contracting States view the income and the property.

Subparagraph 7(a) of the General Note applies where an individual who immediately before death was a resident of Canada held at the time of death a share or option in respect of a share that constitutes property situated in the United States for the purposes of Article XXIX B and that Canada views as giving rise to employment income (for example, a share or option granted by an employer). The United States imposes estate tax on the share or option in respect of a share, while Canada imposes income tax on income from employment. Subparagraph 7(a) provides that for purposes of clause 6(a)(ii) of Article XXIX B, any employment income in respect of the share or option constitutes income from property situated in the United States. This provision ensures that the estate tax paid on the share or option in the United States will be allowable as a deduction from the Canadian income tax.

Subparagraph 7(b) of the General Note applies where an individual who immediately before death was a resident of Canada held at the time of death a registered retirement savings plan (RRSP) or other entity that is a resident of Canada and that is described in subparagraph 1(b) of Article IV (Residence) and such RRSP or other entity held property situated in the United States for the purposes of Article XXIX B. The United States would impose estate tax on the value of the property held by the RRSP or other entity (to the extent such property is subject to Federal estate tax), while Canada would impose income tax on a deemed distribution of the property in the RRSP or other entity. Subparagraph 7(b) provides that any income out of or under the entity in respect of the property is, for the purpose of subparagraph 6(a)(ii) of Article XXIX B, income from property situated in the United States. This provision ensures that the estate tax paid on the underlying property in the United States (if any) will be allowable as a deduction from the Canadian income tax.

Subparagraph 7(c) of the General Note applies where an individual who immediately before death was a resident or citizen of the United States held at the time of death an RRSP or other entity that is a resident of Canada and that is described in subparagraph 1(b) of Article IV (Residence). The United States would impose estate tax on the value of the property held by the RRSP or other entity, while Canada would impose income tax on a deemed distribution of the property in the RRSP or other entity. Subparagraph 7(c) provides that for the purpose of paragraph 7 of Article XXIX B, the tax imposed in Canada is imposed in respect of property situated in Canada. This provision ensures that the Canadian income tax will be allowable as a credit against the U.S. estate tax.

ARTICLE 27

Article 27 of the Protocol provides the entry into force and effective date of the provisions of the Protocol.

Paragraph 1

Paragraph 1 provides generally that the Protocol is subject to ratification in accordance with the applicable procedures in the United States and Canada. Further, the Contracting States shall notify each other by written notification, through diplomatic channels, when their respective applicable procedures have been satisfied.

Paragraph 2

The first sentence of paragraph 2 generally provides that the Protocol shall enter into force on the date of the later of the notifications referred to in paragraph 1, or January 1, 2008, whichever is later. The relevant date is the date on the second of these notification documents, and not the date on which the second notification is provided to the other Contracting State. The January 1, 2008 date is intended to ensure that the provisions of the Protocol will generally not be effective before that date.

Subparagraph 2(a) provides that the provisions of the Protocol shall have effect in respect of taxes withheld at source, for amounts paid or credited on or after the first day of the second month that begins after the date on which the Protocol enters into force. Further, subparagraph 2(b) provides that the Protocol shall have effect in respect of other taxes, for taxable years that begin after (or, if the later of the notifications referred to in paragraph 1 is dated in 2007, taxable years that begin in and after) the calendar year in which the Protocol enters into force. These provisions are generally consistent with the formulation in the U.S. Model treaty, with the exception that a parenthetical was added in subparagraph 2(b) to address the contingency that the written notifications provided pursuant to paragraph 1 may occur in the 2007 calendar year. Further, subparagraph 3(d) of Article 27 of the Protocol contains special provisions with respect to the taxation of cross-border interest payments that have effect for the first two calendar years that end after the date the Protocol enters into force. Therefore, during this period, cross-border interest payments are not subject to the effective date provisions of subparagraph 2(a).

Paragraph 3

Paragraph 3 sets forth exceptions to the general effective date rules set forth in paragraph 2 of Article 27 of the Protocol.

Dual corporate residence tie-breaker

Subparagraph 3(a) of Article 27 of the Protocol provides that paragraph 1 of Article 2 of the Protocol relating to Article IV (Residence) shall have effect with respect to corporate continuations effected after September 17, 2000. This date corresponds to a press release issued on September 18, 2000 in which the United States and Canada identified certain issues with respect to these transactions and stated their intention to negotiate a protocol that, if ap-

proved, would address the issues effective as of the date of the press release.

Certain payments through fiscally transparent entities

Subparagraph 3(b) of Article 27 of the Protocol provides that new paragraph 7 of Article IV (Residence) set forth in paragraph 2 of Article 2 of the Protocol shall have effect as of the first day of the third calendar year that ends after the Protocol enters into force.

Permanent establishment from the provision of services

Subparagraph 3(c) of Article 27 of the Protocol sets forth the effective date for the provisions of Article 3 of the Protocol, pertaining to Article V (Permanent Establishment) of the Convention. The provisions pertaining to Article V shall have effect as of the third taxable year that ends after the Protocol enters into force, but in no event shall it apply to include, in the determination of whether an enterprise is deemed to provide services through a permanent establishment under paragraph 9 of Article V of the Convention, any days of presence, services rendered, or gross active business revenues that occur or arise prior to January 1, 2010. Therefore, the provision will apply beginning no earlier than January 1, 2010 and shall not apply with regard to any presence, services or related revenues that occur or arise prior to that date.

Withholding rates on cross-border interest payments

Subparagraph 3(d) of Article 27 of the Protocol sets forth special effective date rules pertaining to Article 6 of the Protocol relating to Article XI (Interest) of the Convention. Article 6 of the Protocol sets forth a new Article XI of the Convention that provides for exclusive residence State taxation regardless of the relationship between the payer and the beneficial owner of the interest. Subparagraph 3(d), however, phases in the application of paragraph 1 of Article XI during the first two calendar years that end after the date the Protocol enters into force. During that period, paragraph 1 of Article XI of the Convention permits source State taxation of interest if the payer and the beneficial owner are related or deemed to be related by reason of paragraph 2 of Article IX (Related Persons) of the Convention (”related party interest”), and the interest would not otherwise be exempt under the provisions of paragraph 3 of Article XI as it read prior to the Protocol. However, subparagraph 3(d) also provides that the source State taxation on such related party interest is limited to 7 percent in the first calendar year that ends after entry into force of the Protocol and 4 percent in the second calendar year that ends after entry into force of the Protocol.

Subparagraph 3(d) makes clear that the provisions of the Protocol with respect to exclusive residence based taxation of interest when the payer and the beneficial owner are not related or deemed related (”unrelated party interest”) applies for interest paid or credited during the first two calendar years that end after entry into force of the Protocol.

The withholding rate reductions for related party interest and exemptions for unrelated party interest will likely apply retroactively. For example, if the Protocol enters into force on June 30,

2008, paragraph 1 of Article XI, as it reads under subparagraph 3(d) of Article 27, will have the following effect during the first two calendar years. First, unrelated party interest that is paid or credited on or after January 1, 2008 will be exempt from taxation in the source State. Second, related party interest paid or credited on or after January 1, 2008 and before January 1, 2009, will be subject to source State taxation but at a rate not to exceed 7 percent of the gross amount of the interest. Third, related party interest paid or credited on or after January 1, 2009 and before January 1, 2010, will be subject to source State taxation but at a rate not to exceed 4 percent of the gross amount of the interest. Finally, all interest paid or credited after January 1, 2010, will be subject to the regular rules of Article XI without regard to subparagraph 3(d) of Article 27.

Further, the provisions of subparagraph 3(d) ensure that even with respect to circumstances where the payer and the beneficial owner are related or deemed related under the provisions of paragraph 2 of Article IX, the source State taxation of such cross-border interest shall be no greater than the taxation of such interest prior to the Protocol.

Gains

Subparagraph 3(e) of Article 27 of the Protocol provides the effective date for paragraphs 2 and 3 of Article 8 of this Protocol, which relate to the changes made to paragraphs 5 and 7 of Article XIII (Gains) of the Convention. The changes set forth in those paragraphs shall have effect with respect to alienations of property that occur (including, for greater certainty, those that are deemed under the law of a Contracting State to occur) after September 17, 2000. This date corresponds to the press release issued on September 18, 2000 which announced the intention of the United States and Canada to negotiate a protocol that, if approved, would incorporate the changes set forth in these paragraphs to coordinate the tax treatment of an emigrant's gains in the United States and Canada.

Arbitration

Subparagraph 3(f) of Article 27 of the Protocol pertains to Article 21 of the Protocol which implements the new arbitration provisions. An arbitration proceeding will generally begin two years after the date on which the competent authorities of the Contracting States began consideration of a case. Subparagraph 3(f), however, makes clear that the arbitration provisions shall apply to cases that are already under consideration by the competent authorities when the Protocol enters into force, and in such cases, for purposes of applying the arbitration provisions, the commencement date shall be the date the Protocol enters into force. Further, the provisions of Article 21 of the Protocol shall be effective for cases that come into consideration by the competent authorities after the date that the Protocol enters into force. In order to avoid the potential for a large number of MAP cases becoming subject to arbitration immediately upon the expiration of two years from entry into force, the competent authorities are encouraged to develop and implement procedures for arbitration by January 1, 2009, and begin scheduling arbitration of otherwise unresolvable MAP cases in in-

ventory (and meeting the agreed criteria) prior to two years from entry into force.

Assistance in collection

Subparagraph 3(g) of Article 27 of the Protocol pertains to the date when the changes set forth in Article 22 of the Protocol, relating to assistance in collection of taxes, shall have effect. Consistent with the third protocol that entered into force on November 9, 1995, and which had effect for requests for assistance on claims finally determined after November 9, 1985, the provisions of Article 22 of the Protocol shall have effect for revenue claims finally determined by an applicant State after November 9, 1985.

X. ANNEX II.—TREATY HEARING OF JULY 10, 2008

TREATIES

Thursday, July 10, 2008

U.S. SENATE
COMMITTEE ON FOREIGN RELATIONS
Washington, D.C.

The committee met, pursuant to notice, at 2:45 p.m., in Room SD-419, Dirksen Senate Office Building, Hon. Robert Menendez, presiding.

Present: Senators Menendez [presiding] and Lugar.

OPENING STATEMENT OF HON. ROBERT MENENDEZ, U.S. SENATOR FROM NEW JERSEY

Senator MENENDEZ. This hearing of the Committee on Foreign Relations will now come to order.

Today, the committee meets to consider 12 treaties, many of which represent years of work that have culminated in the international frameworks we will discuss today. The topics vary widely—tax, the environment, telecommunications—and all are important issues for which international coordination is crucial. We have an ambitious agenda today, so I will keep my statement brief.

Two of the environmental treaties that we are considering today build on existing treaties to which the United States is already a party and has benefited from over the years. The London dumping protocol represents the culmination of a thorough and intensive effort to update and improve the 1972 London Convention. The land-based sources protocol builds on the 1983 Convention for the Protection and Development of the Marine Environment of the Wider Caribbean Region, also known as the Cartagena Convention.

The third treaty, the anti-fouling convention, stands on its own, but it was negotiated at and relies on the International Maritime Organization, to which the United States is an active member.

The next set of treaties are tax treaties. A basic objective of our bilateral income tax treaties, as their full title implies, is to prevent double taxation of income. In many cases, both the country where a company is headquartered and the company (sic) where a company earns its income tax a company's earnings with the result that the same dollars are taxed twice.

Tax treaties tend to allocate the right to certain income to the residence country rather than the source country or at least to limit source country taxation with the ultimate goal of minimizing the tax burden for the taxpayer. But in many ways, this is just the tip of the iceberg in terms of what tax treaties help the United States to accomplish.

Tax treaties can, one, reduce tax barriers to cross-border trade and investment; two, provide, if well drafted, clarity and greater certainty to taxpayers who are attempting to assess their potential

liability to tax in foreign jurisdictions in which they are doing business or working; and, three, ensure that U.S. taxpayers are not being subject to discriminatory taxes in foreign jurisdictions.

And last, but not least, tax treaties facilitate U.S. Government efforts to prevent tax evasion through important, but often overlooked provisions that provide for the exchange of information between tax authorities.

The United States is a party to 58 income tax treaties covering 66 countries. If we ratify the treaty with Bulgaria, along with the 2008 protocol, we will be adding yet another country to that impressive record. Today, we are considering four tax treaties with three different countries—Canada, Iceland, and Bulgaria. All are important instruments.

It is worth noting that the Canadian protocol we consider today has been in negotiations for over a decade. We do a tremendous amount of cross-border trade with Canada, and Canada is our leading merchandise export destination. It is easy to understand why this protocol is of such importance.

Perhaps the most important aspect of the Canada protocol is the binding arbitration mechanism that Treasury has negotiated. The first U.S. tax agreement to include a binding arbitration provision was the U.S.-Germany income tax treaty, which the committee considered and voted to approve last year.

Many U.S. entities have been caught up in unresolved disputes between the tax authorities of both countries when interpreting and applying the convention. This arbitration mechanism will afford those entities some relief through final decisions made by an arbitration board.

Now, I and other members have raised questions about this mechanism regarding how it might be improved. But I recognize this is a valuable addition to the U.S.-Canada tax treaty.

The new treaty with Iceland would replace an older treaty from 1975. The most important aspect of this treaty is the addition of a strong limitation on benefits provision, which will, if ratified, limit abuse of our treaty with Iceland by nonresidents.

The other two treaties are with Hungary and Poland. Consequently, these three countries present an attractive opportunity for treaty shopping, and it is certainly good to see that Treasury has worked to close this loophole. And I hope to see new treaties with Hungary and Poland that also include strong limitation on benefit provisions.

The new treaty with Bulgaria, along with the 2008 protocol, would be the first income tax treaty between the United States and Bulgaria. The treaty is designed to reduce tax barriers to cross-border investment, provide for better exchange of tax information, and facilitate cross-border tax administration more generally.

Finally, the last set of treaties are the ITU treaties, which was founded in 1865, barely 10 years after the first public message over a telegraph was sent between Washington and Baltimore. Back then, the organization was called the International Telegraph Union. Today, some 140 years later, the fundamental objectives of the organization remain basically unchanged. It is the leading international organization in the world for information and commu-

nication technologies, based in Geneva, and its membership includes 191 countries.

Three of these treaties under consideration today amend the constituent documents that define the ITU and its day-to-day functioning, its constitution, and its convention. These amendments have three main objectives—to facilitate private sector involvement in the organization, to improve the ITU's working methods and flexibility as an organization in order to respond to rapidly changing technology and membership needs, and, three, to promote greater fiscal stability and transparency.

The remaining two ITU treaties under consideration are revisions to the radio regulations, which are instruments negotiated under the auspices of the ITU. These treaties are technical instruments that address international spectrum allocations and radio regulations in many different services, including broadcasting, satellite sound broadcasting, mobile satellite services, and space services.

We are pleased to have a distinguished panel of witnesses, who will help us understand the treaties before us. Let me, on behalf of the committee, welcome Ambassador Balton from the Department of State, the Deputy Assistant Secretary for Oceans and Fisheries who will be testifying on the environmental treaties.

For the tax treaties, we have two witnesses. Let me welcome Mr. Michael Mundaca from the Department of Treasury, the Deputy Assistant Secretary in the Office of Tax Policy. And Ms. Emily McMahon, who is the Deputy Chief of Staff for the Joint Committee on Taxation.

And finally, let me welcome Mr. Richard Beaird, the Senior Deputy U.S. Coordinator for International Communications and Information Policy at the Department of State, who will testify on the ITU treaties.

With that, let me recognize the distinguished Ranking Member of the committee, Senator Lugar, for his opening statement.

STATEMENT OF HON. RICHARD G. LUGAR, U.S. SENATOR FROM INDIANA

Senator LUGAR. Well, thank you very much, Mr. Chairman, and I join you in welcoming our distinguished witnesses, who will help us examine the diverse group of treaties you have described.

The Senate has an important role under the Constitution in the treaty-making process. And this committee's work is central to the exercise of that role.

The treaties before the committee today address several issues in which cooperation between the United States and other governments can advance the interests of all parties. In the economic realm, the tax treaties with Bulgaria, Canada, and Iceland will bolster our economic relationships with countries that are already close trade and investment partners.

As the United States considers how to create jobs and maintain economic growth, it is important that we try to eliminate impediments that prevent our companies from fully accessing international markets. We should work to ensure that the companies pay their fair share of taxes while not being unfairly taxed twice on the same revenue.

Tax treaties are intended to prevent double taxation so that companies are not inhibited from doing business overseas. Now they also strengthen the United States Government's ability to enforce existing laws by enhancing our efforts to gather and compare information in cooperation with foreign governments. As the United States moves to keep the economy growing and to increase the United States employment, international tax policies that promote foreign direct investment in the United States are critically important.

The three environmental treaties before us provide frameworks for cooperation to address a variety of threats to the health of our oceans. These agreements seek to combat pollution of the oceans from multiple sources, including the dumping of waste into ocean waters, the leaching of protective coatings applied to the hulls of ships, and the runoff of wastewater and agricultural pollutants. Such pollution harms our ability to make productive use of ocean resources and threatens public health.

With respect to telecommunications, the agreements before us are part of the ongoing efforts of the United States to advance cooperation in the management and use of the radio spectrum under the auspices of the International Telecommunications Union. Reliable telecommunications capabilities play a critical role in economic activity and growth, and we have an interest in facilitating productive cooperation in this area.

Today's group of treaties places a number of important issues on the committee's plate. Several of these agreements are quite detailed and will require the committee's careful study and analysis. I appreciate the opportunity to discuss these treaties and look forward to the testimony of our witnesses today.

And I thank you, Mr. Chairman, for conducting the hearing.

Senator MENENDEZ. Thank you. Thank you, Senator Lugar.

With that, we will start the testimony of the witnesses. We ask that you keep your statements to about 5 minutes. Your entire statement will be included in the record, and this will give us some time for some questions and answers.

And if you would start, Ambassador Balton, in the order that I introduced you and move down the line? Thank you.

STATEMENT OF HON. DAVID A. BALTON, DEPUTY ASSISTANT SECRETARY FOR OCEANS AND FISHERIES, BUREAU OF OCEANS, ENVIRONMENTAL, AND SCIENTIFIC AFFAIRS, DEPARTMENT OF STATE, WASHINGTON, D.C.

Ambassador BALTON. Thank you very much, Mr. Chairman, members of the committee.

I am pleased to testify in support of the three treaties designed to protect the oceans. The three treaties address different aspects of marine pollution. We commend the committee for taking advantage of this opportunity to consider them together. Ratification of these treaties will allow the United States to reinforce its leadership role on oceans at the international level.

Two of these treaties require implementing legislation. The administration has, in both cases, forwarded to Congress draft legislation for this purpose. We believe that Senate advice and consent to these treaties would spur both houses to enact such legislation.

Please allow me to highlight a few key elements of each treaty. First, the convention on anti-fouling systems. This treaty prohibits the use and application of certain paint-like coatings on a ship's hull. Some of these coatings, while effective in preventing the attachment of barnacles and similar creatures, have significant adverse environmental side effects.

In particular, those coatings that contain organotin biocides can harm oysters and other valuable marine resources when those biocides leach into the water. U.S. law already prohibits use of such anti-foulants on most vessels in the United States. The United States canceled the last registration of organotin paint in 19—I am sorry—in 2005.

To implement the convention fully, the administration has proposed new legislation that would, among other things, broaden existing requirements to cover all U.S. ships as well as foreign ships entering U.S. ports and certain other waters. The anti-fouling coatings industry in the United States supports the standards in the convention and the proposed implementing legislation.

This treaty will enter into force this September. Thirty states representing more than 49 percent of the world's shipping tonnage have already adhered to it. As a party, the United States could participate fully in the international implementation of the convention, especially in the review and adoption of possible proposals to control other anti-fouling systems.

The second treaty is a protocol to the Cartagena Convention, which concerns environmental protection and sustainable development in the Caribbean region. The United States ratified the convention in 1984. The protocol before the Senate today is actually the third protocol to this convention. The United States is already a party to the other two, which deal with oil spills and specially protected areas and wildlife.

This third protocol addresses pollution of the marine environment from land-based sources and activities. Improving control over these sources of pollution, which account for an estimated 70 to 90 percent of all marine pollution, will help protect coral reefs and other sensitive coastal habitats, recreation, tourism, and public health.

Among other things, the protocol sets forth specific effluent limitations for domestic wastewater. The United States already meets or exceeds these standards in all respects.

The United States signed the protocol in 1999. Four states have ratified it so far. We believe U.S. ratification would spur others to follow suit. The protocol will enter into force when nine nations have adhered to it. Although the protocol applies only to the wider Caribbean region, it is the first regional agreement to establish effluent standards of this kind and may well serve as a model for other regions.

The third treaty is the 1996 London protocol, which regulates dumping of harmful wastes and other matter into the sea. The protocol updates the original London convention to which the United States has been a party since 1975. Although the convention and the protocol share many features, the protocol will protect the marine environment more effectively.

Where the convention generally prohibits the dumping of specifically listed substances, the protocol generally prohibits the dumping of all substances except those that are specifically listed. The list of substances that may be permitted for dumping can be amended in light of new information and technologies. Indeed, the list was already amended once to facilitate certain initiatives to sequester carbon dioxide below the sea floor.

The United States would join the treaty as amended. And as a party, the United States would best be able to influence possible further changes to this list as well as fully participate in all issues arising under the protocol.

The United States signed this protocol in 1998. It entered into force in 2006. Currently, it has 35 parties. U.S. ratification would not require significant changes for the United States. However, the administration has submitted proposed implementing legislation in the form of several amendments to the Ocean Dumping Act to bring U.S. law fully into conformity with the requirements of the protocol.

Thank you very much for this opportunity to convey the support of the administration for these vital treaties. I would be happy to answer any questions.

[The prepared statement of Ambassador Balton follows:]

PREPARED STATEMENT OF AMBASSADOR DAVID A. BALTON

MR. CHAIRMAN AND MEMBERS OF THE COMMITTEE: I am pleased to testify today in support of the Senate's provision of advice and consent to three treaties designed to protect the oceans. The three treaties address different aspects of marine pollution in distinct and vital ways. One controls toxic side effects of certain substances used on hulls to prevent attachment of barnacles and other unwanted organisms. Another reduces land-based sources of marine pollution in the Wider Caribbean Region. The third updates and improves an existing treaty on ocean dumping.

As you know, the administration supported Senate action on each of these treaties in its February 2007 letter to Chairman Biden setting out its treaty priorities for the 110th Congress. Although the treaties are not legally or institutionally connected, we commend the committee for taking advantage of this opportunity to consider them together in an effort to send a strong message about the urgent need to protect the world's oceans.

The three treaties before you are: the International Convention on the Control of Harmful Anti-Fouling Systems on Ships, or the "AFS Convention," transmitted to the Senate on January 22, 2008; the Protocol Concerning Pollution from Land-Based Sources and Activities, or the "LBS Protocol" to the Convention for the Protection and Development of the Marine Environment of the Wider Caribbean Region, or the "Cartagena Convention," transmitted to the Senate on February 16, 2007; and the 1996 Protocol to the Convention on the Prevention of Marine Pollution by Dumping of Wastes and Other Matter, or the "London Protocol," transmitted to the Senate on September 4, 2007.

Prompt action to facilitate ratification of these treaties will allow the United States to reinforce and maintain its leadership role on oceans issues at the international and regional levels. Ratification would enhance our ability to work with other States to promote effective implementation of these treaties. As a Party to these treaties, the United States would be able to participate fully in meetings of States Parties aimed at implementation of these treaties and, thereby, more directly affect the implementation and interpretation of these treaties. Further, after the United States ratifies a treaty, other nations are more likely to ratify as well, resulting in greater overall protection of the oceans from marine pollution.

The United States participated actively in the negotiation of each of these treaties. Our technical expertise and drafting skills significantly influenced the final language of each instrument. Throughout these processes, affected U.S. stakeholders provided meaningful input. We believe that ratification of all three treaties enjoys widespread support among these stakeholders and should not be contentious.

Two of the three treaties—the London Protocol and the AFS Convention—require implementing legislation prior to ratification. As discussed in more detail below, the administration has in both cases developed and forwarded to Congress draft legislation for this purpose. We believe that early action by the Senate to provide advice and consent would spur both Houses to enact such legislation.

The transmittal packages for these treaties detail the provisions under each regime. I would, however, like to highlight a few key elements in this testimony.

ANTI-FOULING SYSTEMS CONVENTION

I would like to first address the AFS Convention, which was adopted at the International Maritime Organization (IMO) in London and aims to protect the marine environment and human health from the negative effects of certain anti-fouling systems.

Anti-fouling systems are mainly paint-like coatings used on a ship's hull to prevent attachment of barnacles and other unwanted organisms that slow down ships. Some anti-fouling systems may adversely affect the marine environment through leaching of biocides into the water. In particular, anti-fouling systems containing organotin biocides can cause adverse reproductive effects and shell deformities in marine animals, including economically important species of oysters.

A Party to the AFS Convention must prohibit use and application of organotin-based anti-fouling systems on ships flying its flag or operating under its authority, as well as ships entering its ports, shipyards, or offshore terminals. A survey and certification system, which the Coast Guard would implement domestically for the United States, serves to verify that a ship is in compliance. Domestic law would govern violations of the certificate system and resulting sanctions. The Convention contains standard language on the treatment of vessels entitled to sovereign immunity.

While the treaty is currently limited to prohibitions on organotin-based systems, Annex 1 sets forth procedures for evaluating proposals to add controls on other harmful anti-fouling systems, after the IMO's Marine Environment Protection Committee has completed a comprehensive risk and benefits analysis. As described in the proposed declaration for Article 16 in the administration's transmittal package, a Party may choose to require its express consent prior to being bound by any amendment to Annex 1. The administration recommends that the United States exercise this option.

The Organotin Anti-Fouling Paint Control Act of 1988 (OAPCA), 33 U.S.C.A. §§ 2401–2410, restricts the release rate of organotin from anti-fouling systems and prohibits use of such systems on most vessels in the United States under 25 meters in length. The last organotin anti-fouling paint registration was cancelled in December 2005. The proposed implementing legislation forwarded to Congress would prohibit the use of organotin anti-fouling systems on U.S. ships and foreign ships entering U.S. ports and certain other waters. This prohibition would result in greater protection of the marine environment in near-coastal waters of the United States, and apply the same standards for anti-fouling systems on U.S. vessels and foreign vessels entering U.S. ports. The anti-fouling coatings industry has consistently supported the standards in the AFS Convention and the proposed implementing legislation. Most international shipping interests have already switched to alternative anti-fouling systems that do not contain organotin.

The AFS Convention will enter into force on September 17, 2008. Thirty States have ratified or otherwise accepted the Convention, including Panama, Japan, Mexico and Spain, representing more than 49% of the world's shipping tonnage. It would be highly desirable for the United States to be a Party to the Convention when it enters into force, or soon thereafter, so that we can participate fully in the international implementation of the Convention, especially the review of proposals to control other anti-fouling systems. Ratification of the treaty by the United States would more generally demonstrate our continued environmental leadership in this area and our support for more environmentally friendly anti-fouling technologies.

LAND-BASED SOURCES PROTOCOL

The second treaty I would like to address is a Protocol to the Cartagena Convention, a regional seas agreement negotiated under the auspices of the United Nations Environment Program. The Cartagena Convention, which the United States ratified in 1984, is a framework agreement that sets out general obligations to protect the marine environment of the Wider Caribbean Region, an area encompassing the Gulf of Mexico, Straits of Florida, Caribbean Sea, and the immediately adjacent areas of the Atlantic Ocean within 200-nautical miles of shore. This region is of particular importance to the United States, as waste from other nations combined with the circulation patterns in this area could result in increased pollution in U.S. waters.

The LBS Protocol is in fact one of three subsidiary agreements to the Cartagena Convention. The United States is already a Party to the other two agreements: the Protocol Concerning Co-operation in Combating Oil Spills in the Wider Caribbean Region, and the Protocol Concerning Specially Protected Areas and Wildlife. Together, these agreements offer significant protection to marine and coastal resources in this crucial region.

In negotiating the LBS Protocol, the United States sought to create requirements for other nations bordering this region that would, in effect, bring them up to U.S. standards with respect to controlling land-based sources of marine pollution. As a result of the success of this strategy, U.S. ratification of this instrument would not require new implementing legislation.

It is estimated that 70 to 90 percent of pollution entering the marine environment worldwide emanates from land-based sources and activities. Land-based sources of pollution endanger public health, degrade coral reefs and other sensitive coastal habitats, undermine fisheries resources, and negatively affect regional economies, recreation, and tourism.

The LBS Protocol elaborates on the obligation set forth in Article 7 of the Cartagena Convention to "take all appropriate measures to prevent, reduce and control pollution of the Convention area caused by coastal disposal or by discharges emanating from rivers, estuaries, coastal establishments, outfall structures, or any other sources on their territories."

Among the principal land-based sources of marine pollution in the Wider Caribbean Region are domestic wastewater and agricultural non-point source runoff. Specific effluent limitations for domestic wastewater and a requirement to develop plans for the prevention, reduction and control of agricultural non-point sources of pollution are contained in the legally binding annexes III and IV. Annex I sets forth a list of additional pollutants for Parties to take into account. The Protocol envisions that additional annexes will be developed to address these pollutants, and Annex II sets out factors to be considered by the Parties in developing such annexes. While these original four annexes apply to all Protocol Parties, a Party to the Protocol may choose to require its express consent prior to being bound by any additional annexes that may be adopted in the future. As described in the proposed declaration under Article XVII of the transmittal package, the administration recommends that the United States exercise this option.

While having significant beneficial impacts in a region of specific interest to the United States, the Protocol is also expected to have an impact even beyond the Wider Caribbean Region, as it is the first regional agreement to establish effluent standards to protect the marine environment. It therefore serves as a model for other regions that are also seeking to address this urgent problem.

The United States signed the LBS Protocol in October 1999. It is not yet in force, as only four of the nine necessary ratifications for entry into force have been received—from France, Panama, Saint Lucia, and Trinidad and Tobago.

However, given the strong leadership role played by the United States in the negotiation of the Protocol, U.S. ratification would provide strong encouragement to other States to become contracting parties. Indeed, several States in the region have indicated that they would be more likely to join following U.S. ratification.

LONDON PROTOCOL

The third treaty before you is the 1996 London Protocol, a treaty designed to protect the world's oceans from the dumping of harmful wastes and other matter. The Protocol regulates deliberate disposal at sea of wastes or other matter from vessels, aircraft, platforms, or man-made structures at sea. The Protocol also bans incineration at sea of all wastes or other matter. It represents the culmination of a thorough and intensive effort to update the 1972 London Convention, to which the United States has been a Party since 1975. The Protocol is a free-standing treaty that is intended eventually to replace the London Convention.

Although the Protocol and the London Convention share many features, the Protocol will protect the marine environment more effectively. The Protocol moves from a structure of listing substances that may not be dumped to a "reverse list" approach, which generally prohibits ocean dumping of all wastes or other matter, except for a few specified wastes in Annex 1. When considering whether to allow the dumping of a waste or other matter listed in Annex 1, a Party must follow detailed environmental assessment criteria found in Annex 2, which provide a complete waste management strategy, including consideration of alternatives to ocean disposal.

A few types of activities are not considered dumping under the Protocol. These include placement of matter, such as research devices or artificial reefs, for a pur-

pose other than mere disposal, provided that such placement is not contrary to the aims of the Protocol. Activities related to oil and gas exploration are excluded from the definition of dumping. Further, there are exceptions for "force majeure" and emergency situations. The Protocol contains standard language on the sovereign immunity of ships.

The Protocol, like the Convention, requires a Party to use a permit process to regulate dumping activities within areas subject to national jurisdiction, on vessels loaded in its territory and on vessels flying its flag. Permits are issued and violations are addressed domestically.

The list of substances on Annex 1 that currently may be considered for dumping is meant to be a dynamic list that can be amended when necessary as new information and technologies develop. For example, an amendment, which the U.S. supported, was adopted in November 2006 to add carbon dioxide streams from carbon dioxide capture processes for sequestration, to allow for the possibility of sequestration in sub-seabed geological formations. The United States would join the treaty as amended. As a party, of course, the United States would be able to have a say in the addition of other substances to this list, thereby protecting its interests in determining how and when the ocean may be used for dumping.

The administration's transmittal package proposes one declaration and one understanding to be deposited along with the instrument of ratification. The declaration in Article 3 stems from a suggestion of the United States during the negotiations that at the time of ratification, a State may declare that its consent is required before it may be subject to binding arbitration about the interpretation or application of the general principles in Article 3.1 or 3.2 on precaution and polluter pays. The administration proposes making such a declaration for the United States.

With respect to Article 10, the administration proposes an understanding making clear that disputes regarding the interpretation or application of the Protocol with respect to sovereign immune vessels are not subject to Article 16 dispute settlement procedures.

The United States signed the Protocol on March 31, 1998. It entered into force on March 24, 2006, having met the 26-State requirement. It currently has 35 Parties. The IMO serves as the Secretariat for both the Convention and the Protocol.

Now that the London Protocol has entered into force, it is highly desirable for the United States to join. The United States supported the updating and improvements of the Convention that the Protocol reflects. Further, it is important for the United States to maintain its current leadership role in this area and to ensure our participation in the development of policies and procedures under the Protocol.

The administration has transmitted to Congress a legislative proposal to implement the London Protocol in the form of amendments to the Ocean Dumping Act. While ratification of the Protocol would not require significant changes to the U.S. ocean dumping program as it currently operates, some changes to the Ocean Dumping Act would be needed. For example, it has long been U.S. practice not to authorize incineration at sea or dumping of low-level radioactive wastes. The proposed amendments to the Ocean Dumping Act would explicitly reflect those prohibitions.

CONCLUSION

United States' ratification of the treaties before you today would advance our national interest and would promote our leadership on the prevention of marine pollution. These treaties are widely supported and not contentious in our view.

Thank you, Mr. Chairman and members of the committee for this opportunity to convey the support of the administration for this effort. I urge that the committee give prompt and favorable consideration to these treaties. I would be happy to answer any questions.

Senator MENENDEZ. Thank you.

Mr. Mundaca?

STATEMENT OF MICHAEL MUNDACA, DEPUTY ASSISTANT SECRETARY (INTERNATIONAL), OFFICE OF TAX POLICY, DEPARTMENT OF THE TREASURY, WASHINGTON, D.C.

Mr. MUNDACA. Mr. Chairman, ranking member Lugar, I appreciate the opportunity to appear today to recommend on behalf of the administration favorable action on three tax treaties. We appreciate the committee's interest in these treaties and in the tax treaty network generally.

One of the primary functions of tax treaties is to provide certainty to taxpayers regarding whether their cross-border activities will subject them to tax in another country. Another primary function is to relieve double taxation, including through the reduction of withholding tax rates.

Tax treaties also provide a mechanism for dealing with tax treaty disputes, most often regarding double taxation. To resolve disputes, designated officials of the two governments, known as the competent authorities, consult and endeavor to reach agreement.

In addition, tax treaties include provisions related to tax administration, including information exchange, which is a priority for the United States. In fact, the inclusion of appropriate information exchange provisions is one of the few tax treaty matters we regard as non-negotiable.

The treaties before the committee today with Canada, Iceland, and Bulgaria would further the goals of our tax treaty program, and we urge the committee and the Senate to take prompt and favorable action on these agreements, which I will now describe very briefly.

The proposed protocol with Canada is the fifth protocol to the current convention. The most significant provisions in this protocol relate to the taxation of cross-border interest, the treatment of income derived from fiscally transparent entities, the taxation of services, and mandatory binding arbitration.

More specifically, the proposed protocol eliminates withholding taxes on cross-border interest, which has been a priority for the U.S. business community and the U.S. Treasury Department for a number of years, and represents a substantial improvement over the current convention, which generally provides for a 10 percent withholding tax rate.

In addition, the proposed protocol provides for mandatory binding arbitration of certain cases not able to be resolved by the competent authorities. The U.S. competent authority has a good track record in resolving disputes. Even in the most cooperative bilateral relationships, however, there will be instances in which the competent authorities will not be able to reach a timely and satisfactory result.

The mandatory binding arbitration provision included in the protocol with Canada was negotiated contemporaneously with and is very similar to a provision in our tax treaties with Germany and Belgium, which this committee and the Senate considered last year. We look forward to continuing to work with this committee to make arbitration an effective tool in promoting fair and expeditious resolution of tax treaty disputes.

The committee's comments made with respect to the German and Belgian arbitration provisions have been very helpful and will inform future negotiations of arbitration provisions.

Finally, the proposed protocol with Canada would allow taxation of income from certain provisions of services not subject to source country tax under the current convention. This rule is broader than the rule in the U.S. model treaty but was key to achieving an overall agreement that we believe is in the best interests of the U.S. taxpayers and the United States.

The proposed convention with Iceland would replace the current convention concluded in 1975. The most important change from the current convention is the addition of a limitation on benefits provision. The current convention does not contain anti-treaty shopping provisions and, as a result, has been abused by third country investors.

The proposed convention generally provides for withholding tax rates on investment income that are the same as or lower than those in the current convention. However, while the current convention eliminates withholding tax on cross-border payments of royalties, the proposed convention would allow withholding tax of 5 percent on certain trademark royalty payments. Inclusion of this provision was key to achieving an overall agreement.

The proposed convention with Bulgaria will be the first tax treaty between our two countries. Under the proposed convention, withholding taxes on dividend payments can be imposed at a maximum rate of 10 percent, lowered to 5 percent in the case of a dividend paid to a company that directly holds at least 10 percent of the company paying the dividend.

The proposed convention generally limits withholding taxes on cross-border interest and cross-border royalty payments to 5 percent. And the proposed convention includes a rule, similar to the rule in the proposed protocol with Canada, allowing source country taxation of income from services in certain cases.

Mr. Chairman and ranking member Lugar, let me conclude by thanking you for the opportunity to appear before the committee to discuss these three tax agreements. We thank the committee members and staff for devoting the time and attention to the review of these new agreements, and we are grateful for the assistance and cooperation of the staff on the Joint Committee on Taxation.

On behalf of the administration, we urge the committee and the Senate to take prompt and favorable action on the agreements before you, and I would be happy to answer any questions you might have.

[The prepared statement of Mr. Mundaca follows:]

PREPARED STATEMENT OF MICHAEL MANDACA

Mr. Chairman, ranking member Lugar, and distinguished members of the committee, I appreciate the opportunity to appear today to recommend, on behalf of the administration, favorable action on three tax treaties pending before this committee. We appreciate the committee's interest in these treaties and in the U.S. tax treaty network overall.

This administration is committed to eliminating barriers to cross-border trade and investment, and tax treaties are the primary means for eliminating tax barriers to such trade and investment. Tax treaties provide greater certainty to taxpayers regarding their potential liability to tax in foreign jurisdictions; they allocate taxing rights between the two jurisdictions and include other provisions that reduce the risk of double taxation, including provisions that reduce gross-basis withholding taxes; and they ensure that taxpayers are not subject to discriminatory taxation in the foreign jurisdiction.

This administration is also committed to preventing tax evasion, and our tax treaties play an important role in this area as well. A key element of U.S. tax treaties is exchange of information between tax authorities. Under tax treaties, one country may request from the other such information as may be relevant for the proper administration of the first country's tax laws. Because access to information from other countries is critically important to the full and fair enforcement of U.S. tax laws, information exchange is a top priority for the United States in its tax treaty program.

A tax treaty reflects a balance of benefits that is agreed to when the treaty is negotiated. In some cases, changes in law or policy in one or both of the treaty partners make the partners more willing to increase the benefits beyond those provided by the treaty; in these cases, negotiation of a revised treaty may be very beneficial. In other cases, developments in one or both countries, or international developments more generally, may make is desirable to revisit a treaty to prevent exploitation of treaty provisions and eliminate unintended and inappropriate consequences in the application of the treaty; in these cases, it may be expedient to modify the agreement. Both in setting our overall negotiation priorities and in negotiating individual treaties, our focus is on ensuring that our tax treaty network fulfills its goals of facilitating cross border trade and investment and preventing fiscal evasion.

The treaties before the committee today with Canada, Iceland, and Bulgaria serve to further the goals of our tax treaty network. The treaties with Canada and Iceland would modify existing tax treaty relationships. The tax treaty with Bulgaria would be the first between our two countries. We urge the committee and the Senate to take prompt and favorable action on all of these agreements.

Before discussing the pending treaties in more detail, I would like to address some more general tax treaty matters, to provide background for the committee's and the Senate's consideration of the pending tax treaties.

PURPOSES AND BENEFITS OF TAX TREATIES

Tax treaties set out clear ground rules that govern tax matters relating to trade and investment between the two countries.

One of the primary functions of tax treaties is to provide certainty to taxpayers regarding the threshold question with respect to international taxation: whether a taxpayer's cross-border activities will subject it to taxation by two or more countries. Tax treaties answer this question by establishing the minimum level of economic activity that must be engaged in within a country by a resident of the other before the first country may tax any resulting business profits. In general terms, tax treaties provide that if branch operations in a foreign country have sufficient substance and continuity, the country where those activities occur will have primary (but not exclusive) jurisdiction to tax. In other cases, where the operations in the foreign country are relatively minor, the home country retains the sole jurisdiction to tax.

Another primary function is relief of double taxation. Tax treaties protect taxpayers from potential double taxation primarily through the allocation of taxing rights between the two countries. This allocation takes several forms. First, the treaty has a mechanism for resolving the issue of residence in the case of a taxpayer that otherwise would be considered to be a resident of both countries. Second, with respect to each category of income, the treaty assigns the primary right to tax to one country, usually (but not always) the country in which the income arises (the "source" country), and the residual right to tax to the other country, usually (but not always) the country of residence of the taxpayer (the "residence" country). Third, the treaty provides rules for determining which country will be treated as the source country for each category of income. Finally, the treaty establishes the obligation of the residence country to eliminate double taxation that otherwise would arise from the exercise of concurrent taxing jurisdiction by the two countries.

In addition to reducing potential double taxation, tax treaties also reduce potential "excessive" taxation by reducing withholding taxes that are imposed at source. Under U.S. law, payments to non-U.S. persons of dividends and royalties as well as certain payments of interest are subject to withholding tax equal to 30 percent of the gross amount paid. Most of our trading partners impose similar levels of withholding tax on these types of income. This tax is imposed on a gross, rather than net, amount. Because the withholding tax does not take into account expenses incurred in generating the income, the taxpayer that bears the burden of withholding tax frequently will be subject to an effective rate of tax that is significantly higher than the tax rate that would be applicable to net income in either the source or residence country. The taxpayer may be viewed, therefore, as suffering excessive taxation. Tax treaties alleviate this burden by setting maximum levels for the withholding tax that the treaty partners may impose on these types of income or by providing for exclusive residence-country taxation of such income through the elimination of source-country withholding tax. Because of the excessive taxation that withholding taxes can represent, the United States seeks to include in tax treaties provisions that substantially reduce or eliminate source-country withholding taxes.

As a complement to these substantive rules regarding allocation of taxing rights, tax treaties provide a mechanism for dealing with disputes between the countries regarding the treaties, including questions regarding the proper application of the treaties that arise after the treaty enters into force. To resolve disputes, designated

tax authorities of the two governments—known as the "competent authorities" in tax treaty parlance—are to consult and to endeavor to reach agreement. Under many such agreements, the competent authorities agree to allocate a taxpayer's income between the two taxing jurisdictions on a consistent basis, thereby preventing the double taxation that might otherwise result. The U.S. competent authority under our tax treaties is the Secretary of the Treasury. That function has been delegated to the Deputy Commissioner (International) of the Large and Mid-Size Business Division of the Internal Revenue Service.

Tax treaties also include provisions intended to ensure that cross-border investors do not suffer discrimination in the application of the tax laws of the other country. This is similar to a basic investor protection provided in other types of agreements, but the non-discrimination provisions of tax treaties are specifically tailored to tax matters and, therefore, are the most effective means of addressing potential discrimination in the tax context. The relevant tax treaty provisions explicitly prohibit types of discriminatory measures that once were common in some tax systems. At the same time, tax treaties clarify the manner in which possible discrimination is to be tested in the tax context.

In addition to these core provisions, tax treaties include provisions dealing with more specialized situations, such as rules coordinating the pension rules of the tax systems of the two countries or addressing the treatment of Social Security benefits and alimony and child-support payments in the cross-border context. These provisions are becoming increasingly important as more individuals move between countries or otherwise are engaged in cross-border activities. While these matters may not involve substantial tax revenue from the perspective of the two governments, rules providing clear and appropriate treatment are very important to the affected taxpayers.

Tax treaties also include provisions related to tax administration. A key element of U.S. tax treaties is the provision addressing the exchange of information between the tax authorities. Under tax treaties, the competent authority of one country may request from the other competent authority such information as may be relevant for the proper administration of the first country's tax laws; the information provided pursuant to the request is subject to the strict confidentiality protections that apply to taxpayer information. Because access to information from other countries is critically important to the full and fair enforcement of the U.S. tax laws, information exchange is a priority for the United States in its tax treaty program. If a country has bank-secrecy rules that would operate to prevent or seriously inhibit the appropriate exchange of information under a tax treaty, we will not enter into a new tax treaty relationship with that country. Indeed, the need for appropriate information exchange provisions is one of the treaty matters that we consider non-negotiable.

TAX TREATY NEGOTIATING PRIORITIES AND PROCESS

The United States has a network of 58 income tax treaties covering 66 countries. This network covers the vast majority of foreign trade and investment of U.S. businesses and investors. In establishing our negotiating priorities, our primary objective is the conclusion of tax treaties that will provide the greatest benefit to the United States and to U.S. taxpayers. We communicate regularly with the U.S. business community and the Internal Revenue Service, seeking input regarding the areas in which treaty network expansion and improvement efforts should be focused and seeking information regarding practical problems encountered under particular treaties and particular tax regimes.

The primary constraint on the size of our tax treaty network may be the complexity of the negotiations themselves. Ensuring that the various functions to be performed by tax treaties are all properly taken into account makes the negotiation process exacting and time consuming.

Numerous features of a country's particular tax legislation and its interaction with U.S. domestic tax rules must be considered in negotiating a treaty or protocol. Examples include whether the country eliminates double taxation through an exemption system or a credit system, the country's treatment of partnerships and other transparent entities, and how the country taxes contributions to pension funds, earnings of the funds, and distributions from the funds.

Moreover, a country's fundamental tax policy choices are reflected not only in its tax legislation but also in its tax treaty positions. These choices differ significantly from country to country, with substantial variation even across countries that seem to have quite similar economic profiles. A treaty negotiation must take into account all of these aspects of the particular treaty partner's tax system and treaty policies to arrive at an agreement that accomplishes the United States' tax treaty objectives.

Obtaining the agreement of our treaty partners on provisions of importance to the United States sometimes requires concessions on our part. Similarly, the other country sometimes must make concessions to obtain our agreement on matters that are critical to it. Each treaty that we present to the Senate represents not only the best deal that we believe can be achieved with the particular country, but also constitutes an agreement that we believe is in the best interests of the United States.

In some situations, the right result may be no tax treaty at all. Prospective treaty partners must evidence a clear understanding of what their obligations would be under the treaty, especially those with respect to information exchange, and must demonstrate that they would be able to fulfill those obligations. Sometimes a tax treaty may not be appropriate because a potential treaty partner is unable to do so.

In other cases, a tax treaty may be inappropriate because the potential treaty partner is not willing to agree to particular treaty provisions that are needed to address real tax problems that have been identified by U.S. businesses operating there or because the potential treaty partner insists on provisions the United States will not agree to, such as providing a U.S. tax credit for investment in the foreign country (so-called "tax sparing"). With other countries there simply may not be the type of cross-border tax issues that are best resolved by treaty. For example, if a country does not impose significant income taxes, there is little possibility of double taxation of cross-border income, and an agreement that is focused on the exchange of tax information ("tax information exchange agreements" or TIEAs) may be the most appropriate agreement.

A high priority for improving our overall treaty network is continued focus on prevention of "treaty shopping." The U.S. commitment to including comprehensive limitation on benefits provisions is one of the keys to improving our overall treaty network. Our tax treaties are intended to provide benefits to residents of the United States and residents of the particular treaty partner on a reciprocal basis. The reductions in source-country taxes agreed to in a particular treaty mean that U.S. persons pay less tax to that country on income from their investments there and residents of that country pay less U.S. tax on income from their investments in the United States. Those reductions and benefits are not intended to flow to residents of a third country. If third-country residents are able to exploit one of our tax treaties to secure reductions in U.S. tax, such as through the use of an entity resident in a treaty country that merely holds passive U.S. assets, the benefits would flow only in one direction as third-country residents would enjoy U.S. tax reductions for their U.S. investments, but U.S. residents would not enjoy reciprocal tax reductions for their investments in that third country. Moreover, such third-country residents may be securing benefits that are not appropriate in the context of the interaction between their home country's tax systems and policies and those of the United States. This use of tax treaties is not consistent with the balance of the deal negotiated in the underlying tax treaty. Preventing this exploitation of our tax treaties is critical to ensuring that the third country will sit down at the table with us to negotiate on a reciprocal basis, so we can secure for U.S. persons the benefits of reductions in source-country tax on their investments in that country.

CONSIDERATION OF ARBITRATION

Tax treaties cannot facilitate cross-border investment and provide a more stable investment environment unless the treaty is effectively implemented by the tax administrations of the two countries. Under our tax treaties, when a U.S. taxpayer becomes concerned about implementation of the treaty, the taxpayer can bring the matter to the U.S. competent authority who will seek to resolve the matter with the competent authority of the treaty partner. The competent authorities will work cooperatively to resolve genuine disputes as to the appropriate application of the treaty.

The U.S. competent authority has a good track record in resolving disputes. Even in the most cooperative bilateral relationships, however, there will be instances in which the competent authorities will not be able to reach a timely and satisfactory resolution. Moreover, as the number and complexity of cross-border transactions increases, so does the number and complexity of cross-border tax disputes. Accordingly, we have considered ways to equip the U.S. competent authority with additional tools to resolve disputes promptly, including the possible use of arbitration in the competent authority mutual agreement process.

The first U.S. tax agreement that contemplated arbitration was the U.S.-Germany income tax treaty signed in 1989. Tax treaties with several other countries, including Canada, Mexico, and the Netherlands, incorporate authority for establishing voluntary binding arbitration procedures based on the provision in the prior U.S.-Ger-

many treaty. Although we believe that the presence of these voluntary arbitration provisions may have provided some limited assistance in reaching mutual agreements, it has become clear that the ability to enter into voluntary arbitration does not provide sufficient incentive to resolve problem cases in a timely fashion.

Over the past few years, we have carefully considered and studied various types of mandatory arbitration procedures that could be used as part of the competent authority mutual agreement process. In particular, we examined the experience of countries that adopted mandatory binding arbitration provisions with respect to tax matters. Many of them report that the prospect of impending mandatory arbitration creates a significant incentive to compromise before commencement of the process. Based on our review of the U.S. experience with arbitration in other areas of the law, the success of other countries with arbitration in the tax area, and the overwhelming support of the business community, we concluded that mandatory binding arbitration as the final step in the competent authority process can be an effective and appropriate tool to facilitate mutual agreement under U.S. tax treaties.

One of the treaties before the committee, the Protocol with Canada, includes a type of mandatory arbitration provision negotiated contemporaneously with, and very similar to, a provision in our current, recently ratified treaties with Germany and Belgium, which this committee and the Senate considered last year.

In the typical competent authority mutual agreement process, a U.S. taxpayer presents its problem to the U.S. competent authority and participates in formulating the position the U.S. competent authority will take in discussions with the treaty partner. Under the arbitration provision proposed in the Canadian protocol, as in the similar provisions that are now part of our treaties with Germany and Belgium, if the competent authorities cannot resolve the issue within two years, the competent authorities must present the issue to an arbitration board for resolution, unless both competent authorities agree that the case is not suitable for arbitration. The arbitration board must resolve the issue by choosing the position of one of the competent authorities. That position is adopted as the agreement of the competent authorities and is treated like any other mutual agreement (i.e., one that has been negotiated by the competent authorities) under the treaty.

Because the arbitration board can only choose between the positions of each competent authority, the expectation is that the differences between the positions of the competent authorities will tend to narrow as the case moves closer to arbitration. In fact, if the arbitration provision is successful, difficult issues will be resolved without resort to arbitration. Thus, it is our expectation that these arbitration provisions will be rarely utilized, but that their presence will encourage the competent authorities to take approaches to their negotiations that result in mutually agreed conclusions in the first instance.

The arbitration process proposed in the agreement with Canada, consistent with the German and Belgian provisions, is mandatory and binding with respect to the competent authorities. However, consistent with the negotiation process under the mutual agreement procedure, the taxpayer can terminate the arbitration at any time by withdrawing its request for competent authority assistance. Moreover, the taxpayer retains the right to litigate the matter (in the United States or the treaty partner) in lieu of accepting the result of the arbitration, just as it would be entitled to litigate in lieu of accepting the result of a negotiation under the mutual agreement procedure.

Arbitration is a growing and developing field, and there are many forms of arbitration from which to choose. We intend to continue to study other arbitration provisions and to monitor the performance of the provisions in the agreements with Belgium and Germany, as well as the performance of the provision in the agreement with Canada, if ratified. We look forward to continuing to work with the committee to make arbitration an effective tool in promoting the fair and expeditious resolution of treaty disputes. The committee's comments made with respect to the German and Belgian arbitration provisions have been very helpful and will inform future negotiations of arbitration provisions.

DISCUSSION OF PROPOSED TREATIES

I now would like to discuss in more detail the three treaties that have been transmitted for the Senate's consideration. We have submitted a Technical Explanation of each treaty that contains detailed discussions of the provisions of each treaty. These Technical Explanations serve as an official guide to each treaty. The Technical Explanation to the Protocol with Canada was reviewed by Canada, and Canada subscribes to its contents, as will be confirmed by a press release from the Canadian Ministry of Finance.

Canada

The proposed Protocol with Canada was signed in Chelsea on September 21, 2007, and is the fifth protocol of amendment to the current Convention negotiated in 1980 and amended by prior protocols in 1983, 1984, 1995, and 1997. The most significant provisions in this treaty relate to the taxation of cross-border interest, the treatment of income derived through fiscally transparent entities, the taxation of certain provisions of services, and the adoption of mandatory arbitration to facilitate the resolution of disputes between the U.S. and Canadian revenue authorities. The proposed Protocol also makes a number of changes to reflect changes in U.S. and Canadian law, and to bring the current Convention into closer conformity with current U.S. tax treaty policy.

The proposed Protocol eliminates withholding taxes on cross-border interest payments. The elimination of withholding taxes on all cross-border interest payments between the United States and Canada has been a top tax treaty priority for both the business community and the Treasury Department for many years. The proposed Protocol represents a substantial improvement over the current Convention, which generally provides for a source-country withholding tax rate of 10 percent. This provision would be effective for interest paid to unrelated parties on the first day of January of the year in which the proposed Protocol enters into force, and it would be phased in for interest paid to related persons over a three-year period. Consistent with U.S. tax treaty policy, the proposed Protocol also provides exceptions to the elimination of source-country taxation with respect to contingent interest and payments from a U.S. real estate mortgage investment conduit.

The proposed Protocol also would provide that a U.S. person is generally eligible to claim the benefits of the treaty when such person derives income through an entity that is considered by the United States to be fiscally transparent (e.g., a partnership) unless the entity is a Canadian entity and is not treated by Canada as fiscally transparent. The proposed Protocol in addition contains anti-abuse provisions intended to address certain situations involving the use of these entities to obtain treaty benefits inappropriately.

The current Convention generally limits the taxation by one country of the business profits of a resident of the other country. The source country's right to tax such profits is generally limited to cases in which the profits are attributable to a permanent establishment located in that country. The proposed Protocol would add provisions related to the taxation of permanent establishments. Most importantly, the proposed Protocol includes a special rule allowing source-country taxation of income from certain provisions of services not otherwise considered to be provided through a permanent establishment. This rule is broader than the permanent establishment rule in the U.S. Model tax treaty but was key to achieving an overall agreement that we believe is in the best interests of the United States and U.S. taxpayers.

As previously noted, the proposed Protocol provides for mandatory arbitration of certain cases that have not been resolved by the competent authority within a specified period, generally two years from the commencement of the case. Under the proposed Protocol, the arbitration process may be used to reach an agreement with respect to certain issues relating to residence, permanent establishment, business profits, related persons, and royalties. The arbitration board must deliver a determination within six months of the appointment of the chair of the arbitration board, and the determination must either be the proposed resolution submitted by the United States or the proposed resolution submitted by Canada. The board's determination has no precedential value and the board shall not provide a rationale for its determination.

The proposed Protocol also makes a number of other modifications to the current Convention to reflect changes to U.S. law and current U.S. tax treaty policy. For example, the proposed Protocol updates the current Convention's treatment of pensions for cross-border workers to remove barriers to the flow of personal services between the United States and Canada that could otherwise result from discontinuities in the laws of the two countries regarding the tax treatment of pensions. In addition, the proposed Protocol updates the current Convention's limitation on benefits provisions so that they apply on a reciprocal basis. The proposed Protocol also addresses the treatment of companies that engages in corporate "continuance" transactions and revises the current Convention's rules regarding the residence of so-called dual resident companies.

The proposed Protocol provides that the United States and Canada shall notify each other in writing, through diplomatic channels, when their respective applicable procedures for ratification have been satisfied. The proposed Protocol will enter into force upon the date of the later of the required notifications. For taxes withheld at source, it will generally have effect for amounts paid or credited on or after the first day of the second month that begins after the date the proposed Protocol enters into

force, although certain provisions with respect to interest may have earlier effect. With respect to other taxes, the proposed Protocol will generally have effect for taxable years that begin after the calendar year in which the proposed Protocol enters into force. Certain provisions will be phased in or have a delayed effective date. Provisions regarding corporate continuance transactions will apply retroactively, consistent with prior Treasury Department public statements.

Iceland

The proposed Convention and accompanying Protocol with Iceland was signed in Washington, D.C., on October 23, 2007. It would replace the current Convention, concluded in 1975. The most important change from the current Convention is the addition of a limitation on benefits provision. The proposed Convention also makes changes to some of the withholding tax rates provided in the current Convention. In addition, the proposed Convention makes a number of changes to reflect changes in U.S. and Icelandic law, and to conform to current U.S. tax treaty policy.

As just noted, the proposed Convention contains a comprehensive limitation on benefits provision, generally following the current U.S. Model income tax treaty. The current Convention does not contain treaty shopping protections and, as a result, has been abused by third-country investors in recent years. For this reason, revising the current Convention has been a top tax treaty priority.

The proposed Convention generally provides for withholding rates on investment income that are the same as or lower than those in the current Convention. Like the current Convention, the proposed Convention provides for reduced source-country taxation of cross-border dividends. In addition, the proposed Convention would eliminate source-country withholding tax on cross-border dividend payments to pension funds. As with the current Convention, the proposed Convention generally would eliminate source-country withholding tax on cross-border interest payments. However, while the current Convention eliminates source-country withholding taxes on all cross-border payments of royalties, the proposed Convention would allow the country in which certain cross-border trademark royalties arise to impose a withholding tax of up to 5 percent. Inclusion of this provision was key to achieving an overall agreement that we believe is in the best interests of the United States and U.S. taxpayers.

In addition, the proposed Convention provides for the exchange between the tax authorities of each country of information relevant to carrying out the provisions of the agreement or the domestic tax laws of either country.

The proposed Convention provides that the United States and Iceland shall notify each other in writing, through diplomatic channels, when their respective applicable procedures for ratification have been satisfied. The proposed Convention will enter into force on the date of the later of the required notifications. It will have effect, with respect to taxes withheld at source, for amounts paid or credited on or after the first day of January of the calendar year following entry into force, and with respect to other taxes, for taxable years beginning on or after the first day of January following the date upon which the proposed Convention enters into force. The current Convention will, with respect to any tax, cease to have effect as of the date on which this proposed Convention has effect with respect to such tax. However, where any person would be entitled to greater benefits under the current Convention, at the election of the person, the current Convention shall continue to have effect in its entirety with respect to such person for a period of 12 months from the date the provisions of the proposed Convention are effective.

Bulgaria

The proposed income tax Convention and accompanying Protocol with Bulgaria signed in Washington, D.C., on February 23, 2007, and the subsequent Protocol with Bulgaria signed in Sofia, on February 26, 2008, together would represent the first income tax treaty between the United States and Bulgaria. The proposed Convention is generally consistent with the current U.S. Model income tax treaty and with treaties that the United States has with other countries.

Under the proposed Convention, withholding taxes on cross-border portfolio dividend payments may be imposed by the source state at a maximum rate of 10 percent. When the beneficial owner of a cross-border dividend is a company that directly owns at least 10 percent of the stock of the company paying the dividend, withholding tax may be imposed at a maximum rate of 5 percent. The proposed Convention also provides for a withholding rate of zero on cross-border dividend payments to pension funds.

The proposed Convention generally limits withholding taxes on cross-border interest payments to a maximum rate of 5 percent. No withholding tax on a cross-border interest payment is generally permitted, however, when the interest is beneficially

owned by, or guaranteed by, the government or the central bank of the other country (or any institution owned by that country), a pension fund resident in the other country, or a financial institution (including a bank or an insurance company) resident in the other country.The proposed Convention provides that withholding taxes on cross-border royalty payments are limited to a maximum rate of 5 percent.

The proposed Convention also incorporates rules provided in the U.S. Model tax treaty for certain classes of investment income. For example, dividends paid by entities such as U.S. regulated investment companies and real estate investment trusts, are subject to special rules to prevent the use of these entities to transform what is otherwise higher-taxed income into lower-taxed income.

The proposed Convention limits the taxation by one country of the business profits of a resident of the other country. The source country's right to tax such profits is generally limited to cases in which the profits are attributable to a permanent establishment located in that country. The proposed Convention includes a rule, similar to a rule in the proposed Protocol with Canada, allowing source-country taxation of income from certain provisions of services. The proposed Convention also provides that certain employees or agents that maintain a stock of goods from which the agent regularly fills orders on behalf of the principal, and conduct additional activities contributing to the conclusion of sales, may result in a permanent establishment.

Consistent with current U.S. tax treaty policy, the proposed Convention includes a comprehensive limitation on benefits article, which is designed to deny treaty shoppers the benefits of the Convention. The proposed Convention provides for nondiscriminatory treatment by one country to residents and nationals of the other country. In addition, the proposed Convention provides for the exchange between the tax authorities of each country of information relevant to carrying out the provisions of the agreement or the domestic tax laws of either country. This will facilitate the enforcement of U.S. domestic tax rules.

The proposed Convention provides that the United States and Bulgaria shall notify each other, through diplomatic channels, when their respective applicable procedures for ratification have been satisfied.

The proposed Convention will enter into force upon the date of receipt of the later of the required notifications. It will have effect, with respect to taxes withheld at source, for amounts paid or credited on or after the first day of January in the year following the date upon which the proposed Convention enters into force and, with respect to other taxes, for taxable years beginning on or after the first day of January in the year following the date upon which the proposed Convention enters into force.

TREATY PROGRAM PRIORITIES

A key continuing priority for the Treasury Department is updating the few remaining U.S. tax treaties that provide for low withholding tax rates but do not include the limitation on benefits provisions needed to protect against the possibility of treaty shopping. Accordingly, we currently are in ongoing discussions with both Poland and Hungary regarding the inclusion of anti-treaty shopping provisions.

In addition, we continue to maintain a very active calendar of tax treaty negotiations. We recently initialed a new tax treaty with Malta. We also are currently negotiating with France and New Zealand, and expect to announce soon the opening of other negotiations.

We also have undertaken exploratory discussions with several countries in Asia and South America that we hope will lead to productive negotiations later in 2008 or in 2009.

CONCLUSION

Mr. Chairman and ranking member Lugar, let me conclude by thanking you for the opportunity to appear before the committee to discuss the administration's efforts with respect to the three agreements under consideration. We appreciate the committee's continuing interest in the tax treaty program, and we thank the members and staff for devoting time and attention to the review of these new agreements. We are also grateful for the assistance and cooperation of the staff of the Joint Committee on Taxation.

On behalf of the administration, we urge the committee to take prompt and favorable action on the agreements before you today. I would be happy to respond to any question you may have.

Senator MENENDEZ. Thank you.

Ms. McMahon?

STATEMENT OF EMILY S. MCMAHON, DEPUTY CHIEF OF STAFF, JOINT COMMITTEE ON TAXATION, UNITED STATES CONGRESS, WASHINGTON, D.C.

Ms. MCMAHON. Thank you, Mr. Chairman.

I appreciate the opportunity to present the testimony of the staff of the Joint Committee on Taxation concerning the proposed protocol with Canada and the proposed treaties with Iceland and Bulgaria.

As we have in the past, the Joint Committee staff has prepared pamphlets concerning the proposed protocol and the treaties. These provide detailed descriptions of their provisions and comparisons with the U.S. model treaty and with other recent U.S. income tax treaties. Therefore, in my time today, I am going to focus just on a few of the more significant features of the proposed agreements.

First, with respect to Canada, as has been mentioned, the proposed protocol would modify an existing treaty with Canada that was signed in 1980. Most of the provisions are intended to bring the treaty more in line with other recent U.S. treaties, but there are at least four provisions that merit particular attention.

The first is that the proposed protocol would reduce the rate of withholding tax on interest payments from 10 percent under the existing treaty to zero in most cases. The existing treaty with Canada is only—is one of only a handful of U.S. treaties that currently permit withholding on interest payments. So the proposed protocol would bring the Canadian treaty in line with most other U.S. treaties and with the model.

The protocol does not, however, provide for a zero rate of withholding on dividends paid by a subsidiary to a corporate parent, and that is a distinction from several of the more recent—a number of the more recent treaties with major trading partners.

Second, the proposed protocol, as has been mentioned, would replace the voluntary arbitration procedures of the present treaty with a mandatory binding arbitration procedure for resolving disputes between the competent authorities. The U.S. model also does not include a mandatory arbitration procedure, but a similar provision does appear in the recent treaties with Belgium and Germany.

We understand that there are a significant number of competent authority cases now pending between the United States and Canada and that, historically, a substantial number of these cases simply have not been resolved. The mandatory arbitration procedure is intended to ensure that tax disputes between the two countries are resolved effectively and within a limited time period. In fact, the mere existence of the procedure is expected to encourage the competent authorities to settle cases promptly in order to avoid arbitration.

However, it will take time to determine whether the procedure is effective or whether there may be unexpected problems. At this point, it is still too early to assess the effect of the mandatory arbitration provisions in the treaties with Germany and Belgium, and therefore, the committee may wish to understand how the Treasury Department intends to monitor the effectiveness of the arbitration procedures in all three of these treaties and the extent to which future treaties are expected to include similar procedures.

Third, the proposed protocol would add some new rules regarding the circumstances in which income earned through or paid by fiscally transparent entities will be entitled to treaty benefits. In many respects, those rules are consistent with existing U.S. internal tax rules. However, they also include some more restrictive rules that are designed to address so-called double-dip financing structures under which U.S. and Canadian taxpayers have used fiscally transparent hybrid entities to produce income that effectively escapes tax in both countries.

And finally, the proposed protocol adds a special rule under which income from services performed by an enterprise of one country in the other country can be taxed in the recipient country even if the service provider does not otherwise have a permanent establishment in that country. A similar provision appears in several existing U.S. treaties with developing countries and in the proposed treaty with Bulgaria, but this is the first time that such a provision has been proposed with a developed country.

There are a number of unresolved questions regarding the administration of this provision, and the committee may wish to understand whether discussion is going on between the U.S. and Canada to resolve these questions, especially in light of the substantial flow of cross-border services between the two countries.

With respect to Iceland, the proposed treaty would replace an existing treaty signed in 1975. And in most respects, the proposed new treaty is consistent with the U.S. model and other recent U.S. treaties. But as indicated earlier, its most significant feature is the inclusion of a comprehensive modern limitation on benefits provision that will prevent the inappropriate use of the treaty by third country residents, a practice known as treaty shopping.

The present treaty with Iceland is one of three treaties, the others being Hungary and Poland, that are especially—present especially attractive opportunities for treaty shopping. And the fact that the new treaty with Iceland includes a comprehensive limitation on benefits provision will eliminate one of those major opportunities.

And finally, with respect to Bulgaria, the proposed treaty would be the first treaty with that country, the first income tax treaty with that country. It is generally consistent with the provisions of the U.S. model and with other recent treaties with developing countries.

A somewhat unusual feature is that it does permit a 5 percent withholding rate on interest and dividends, but that is consistent with an EU directive that Bulgaria is eligible for for a transitional period in respect to payments to other EU countries, and Bulgaria has agreed to reconsider that rate in 2014 in connection with the expiration of that transitional period.

And finally, as mentioned earlier, the Bulgaria treaty does have the same services provision that appears in the Canadian treaty. But that is not so unusual in this case, given that this is a treaty with a developing country.

As I mentioned earlier, all of these provisions and issues are discussed in more detail in the Joint Committee pamphlets, and I would be happy to answer any questions that the committee may have either now or in the future.

Thank you.

[The prepared statement of Ms. McMahon follows:]

PREPARED STATEMENT OF EMILY S. MCMAHON

My name is Emily S. McMahon. I am Deputy Chief of Staff of the Joint Committee on Taxation. It is my pleasure to present today the testimony of the staff of the Joint Committee on Taxation concerning the proposed protocol to the income tax treaty with Canada and the proposed income tax treaties with Iceland and Bulgaria.[1]

OVERVIEW

As in the past, the Joint Committee staff has prepared pamphlets covering the proposed protocol and treaties. The pamphlets provide detailed descriptions of the proposed protocol and treaties, including comparisons with the United States Model Income Tax Convention of November 15, 2006 (the "U.S. Model treaty"), prepared by the Treasury Department, and with other recent U.S. income tax treaties.[2] The pamphlets also provide detailed discussions of certain issues raised by the proposed protocol and treaties. We consulted with the Treasury Department and with the staff of your committee in analyzing the proposed protocol and treaties and in preparing the pamphlets.

The principal purposes of the protocol and each treaty are to reduce or eliminate double taxation of income earned by residents of either the United States or the treaty country from sources within the other country and to prevent avoidance or evasion of the taxes of the two countries. The proposed protocol and each treaty also are intended to promote close economic cooperation between the United States and the respective treaty country and to eliminate possible barriers to trade and investment caused by the overlapping taxing jurisdictions of the United States and the treaty country. As in other U.S. income tax treaties, these objectives principally are achieved through each country's agreement to limit, in certain specified situations, its right to tax income derived from its territory by residents of the other country.

The proposed protocol with Canada would make several modifications to an existing income tax treaty that was signed in 1980. The U.S.-Canada income tax treaty has been modified by four previous protocols, in 1983, 1984, 1995, and 1997. The proposed income tax treaty with Iceland, together with a contemporaneously signed protocol, would replace an existing treaty signed in 1975. The proposed income tax treaty with Bulgaria, together with the proposed 2007 and 2008 protocols, would be the first income tax treaty between the United States and Bulgaria.

My testimony today will highlight some of the significant features of the proposed protocol and treaties and certain issues that they raise.

U.S. Model treaty

In November 2006, the Treasury Department released the present U.S. Model treaty.[3] As a general matter, the U.S. model tax treaties are intended to provide a framework for U.S. tax treaty policy and a starting point for negotiations with our treaty partners. These models provide helpful information to taxpayers, the Congress, and foreign governments as to U.S. policies on tax treaty matters. Periodical updates to reflect new developments and congressional views with regard to particular issues of U.S. tax treaty policy ensure that the model treaties remain meaningful and relevant.

The present U.S. Model treaty incorporates the key developments in U.S. income tax treaty policy that are reflected in recent U.S. income tax treaties. The proposed protocol and treaties that are the subject of this hearing are generally consistent with the provisions found in the U.S. Model treaty. However, there are some significant differences from the U.S. Model treaty that I will discuss.

---

[1] This document may be cited as follows: Joint Committee on Taxation, Testimony of the Staff of the Joint Committee on Taxation Before the Senate Committee on Foreign Relations Hearing on the Proposed Protocol to the Income Tax Treaty with Canada and the Proposed Tax Treaties with Iceland and Bulgaria (JCX-60-08), July 10, 2008. This publication can also be found at www.jct.gov.

[2] Joint Committee on Taxation, Explanation of Proposed Protocol to the Income Tax Treaty Between the United States and Canada (JCX-57-08), July 8, 2008; Joint Committee on Taxation, Explanation of Proposed Income Tax Treaty Between the United States and Iceland (JCX-58-08), July 8, 2008; Joint Committee on Taxation, Explanation of Proposed Income Tax Treaty Between the United States and Bulgaria (JCX-59-08), July 8, 2008.

[3] For a comparison of the 2006 U.S. model income tax treaty with its 1996 predecessor, see Joint Committee on Taxation, Comparison of the United States Model Income Tax Convention of September 15, 1996 with the United States Model Income Tax Convention of November 15, 2006 (JCX-27-07), May 8, 2007.

Limitation-on-benefits provisions

One important area in which the proposed protocol and treaties are generally consistent with the U.S. Model treaty is the inclusion in all three proposed instruments of a comprehensive limitation-on-benefits provision. These limitation-on-benefits provisions generally are intended to make it more difficult for residents of countries other than the United States and the treaty partner to benefit inappropriately from the treaty.

When a resident of one country derives income from another country, the internal tax rules of the two countries may cause that income to be taxed in both countries. One purpose of a bilateral income tax treaty is to allocate taxing rights for cross-border income and thereby to prevent double taxation of residents of the treaty countries. Although a bilateral income tax treaty is intended to apply only to residents of the two treaty countries, residents of third countries may attempt to benefit from a treaty by engaging in a practice known as "treaty shopping." Treaty shopping may involve directing an investment in one treaty country through an entity organized in the other treaty country or engaging in income-stripping transactions with a treaty-country resident. Limitation-on-benefits provisions are intended to deny treaty benefits in certain cases of treaty shopping.

The proposed treaty with Iceland contains a detailed limitation-on-benefits provision (Article 21) that reflects the anti-treaty-shopping provisions included in the U.S. Model treaty and more recent U.S. income tax treaties. In contrast, the present treaty between the United States and Iceland is one of only eight remaining U.S. income tax treaties that do not include any limitation-on-benefits rules. Three of those eight treaties, including the treaties with Iceland, Hungary, and Poland, provide for a complete exemption from withholding on interest payments from one treaty country to the other treaty country. Consequently, those three treaties present particularly attractive opportunities for treaty-shopping. In fact, a November 2007 report prepared by the Treasury Department at the request of the U.S. Congress suggests that the income tax treaties with Hungary and Iceland have increasingly been used for treaty-shopping purposes in recent years as the United States adopted modern limitation-on-benefits provisions in its other treaties.[4] The proposed treaty with Iceland, including its modern limitation-on-benefits rules, would thus eliminate a significant treaty-shopping opportunity. Nevertheless, the Committee may wish to inquire of the Treasury Department regarding its plans to address the remaining U.S. income tax treaties that do not include limitation-on-benefits provisions, and in particular the treaties with Hungary and Poland.

The proposed protocol with Canada replaces Article XXIX A (Limitation on Benefits) of the present treaty with a new article that reflects the anti-treaty-shopping provisions included in the U.S. Model treaty and more recent U.S. income tax treaties. Unlike the rules in the present treaty (which may be applied only by the United States), the new rules are reciprocal and are intended to prevent the indirect use of the treaty by persons who are not entitled to its benefits by reason of residence in Canada or the United States.

The proposed treaty with Bulgaria also contains a detailed limitation-on-benefits provision similar to that of the U.S. Model treaty to prevent the inappropriate use of the treaty by third-country residents (Article 21).

"Zero-rate" dividend provisions

Another significant similarity between the U.S. Model treaty and the proposed protocol and treaties is the lack of a "zero-rate" of withholding tax on certain intercompany dividends. Until 2003, no U.S. income tax treaty provided for a complete exemption from dividend withholding tax, and the U.S. Model treaty and the 2005 Model Convention on Income and Capital of the Organisation for Economic Co-operation and Development ("OECD") do not provide an exemption. By contrast, many bilateral income tax treaties of other countries eliminate withholding taxes on direct dividends between treaty countries, and the European Union ("EU") Parent-Subsidiary Directive repeals withholding taxes on intra-EU direct dividends (determined by reference to a 15-percent ownership threshold in 2007).

Moreover, the recent U.S. income tax treaties and protocols with Australia, Japan, Mexico, the Netherlands, Sweden, the United Kingdom, Germany, Belgium, Denmark, and Finland include zero-rate dividend provisions. Eligibility for this zero rate generally is contingent on meeting an 80-percent ownership threshold and certain additional requirements. The Senate ratified those treaties and protocols in

[4] Department of the Treasury, Report to the Congress on Earnings Stripping, Transfer Pricing and U.S. Income Tax Treaties (Nov. 28, 2007). The report states that, as of 2004, it does not appear that the U.S.-Poland income tax treaty has been extensively exploited by third-country residents.

2003 (Australia, Mexico, and the United Kingdom), 2004 (Japan and the Netherlands), 2006 (Sweden), and 2007 (Germany, Belgium, Denmark, and Finland). On the other hand, neither the recent protocol with France nor the recent treaties with Bangladesh and Sri Lanka include an exemption from dividend withholding.

In general, the dividend articles of the proposed protocol and treaties provide a maximum source-country withholding tax rate of 15 percent (10 percent under the proposed treaty with Bulgaria) and a reduced five-percent maximum rate for dividends received by a company owning at least 10 percent of the dividend-paying company. A zero rate of withholding is generally available under the proposed protocol and treaties for dividends received by a pension fund. The proposed protocol and treaties also include special rules for dividends received from U.S. regulated investment companies and real estate investment trusts. These special rules generally are similar to provisions included in other recent U.S. treaties and protocols.

In previous testimony before the Committee, the Treasury Department has indicated that zero-rate dividend provisions should be allowed only under treaties that have restrictive limitation-on-benefits rules and that provide comprehensive information exchange. Even in those treaties, according to previous Treasury Department statements, dividend withholding tax should be eliminated only based on an evaluation of the overall balance of benefits under the treaty. The Committee may wish to consider what overall balance of considerations prompted the Treasury Department not to seek a zero-rate provision in the proposed protocol and treaties, all of which have comprehensive limitation-on-benefits and information-exchange provisions.

Mandatory and binding arbitration provision in proposed protocol with Canada

One important feature of the proposed protocol with Canada is the replacement of the voluntary arbitration procedure of Article XXVI (Mutual Agreement Procedure) of the present treaty with a mandatory arbitration procedure that is sometimes referred to as "last best offer" arbitration. Under this procedure, each of the competent authorities proposes one and only one figure for settlement of a dispute, and the arbitrator must select one of those figures as the award. The last best offer approach is intended to induce the competent authorities to moderate their positions, including before arbitration proceedings would commence, and thus to increase the possibility of a negotiated settlement. Under the proposed protocol, unless a taxpayer or other "concerned person" (in general, a person whose tax liability is affected by the arbitration determination) does not accept the arbitration determination, it is binding on the treaty countries with respect to the case.

The U.S. Model treaty does not include a mandatory arbitration procedure. However, the use of mandatory and binding arbitration in tax disputes between countries is not a novel concept. A provision similar to the provision in the proposed protocol with Canada does appear in the protocol with Germany and the treaty with Belgium, both ratified by the Senate in 2007. Also in 2007, the OECD Committee on Fiscal Affairs adopted proposed changes to its model treaty and commentary that incorporate a mandatory and binding arbitration procedure, some elements of which are generally similar to those of the proposed protocol. The OECD has announced that it will be adopting those changes in final form shortly. In addition, the EU has adopted certain mandatory and binding arbitration procedures that are applicable to transfer pricing disputes between members of the EU.

Judging from the actions taken by the OECD and the EU, unresolved competent authority proceedings appear to be a multinational occurrence. As a general matter, it is beneficial to resolve tax disputes effectively and efficiently. The new arbitration procedures included in the proposed protocol are intended to ensure that the mutual agreement procedures occur pursuant to a schedule and that all cases are resolved within a limited time period.

We understand that there are a significant number of competent authority cases pending between the United States and Canada, and that, historically, a substantial number of double taxation cases have not been satisfactorily resolved by the U.S. and Canadian competent authorities. The Treasury Department does not release statistics that reflect competent authority activities by individual treaty partners. While many expect that the proposed mandatory and binding arbitration procedures will be successful in resolving recurring issues and will encourage the competent authorities to settle cases without resort to arbitration, it will take time to ascertain if these procedures are effective or if unexpected problems arise.

Meanwhile, the Treasury Department or other trading partners may seek to negotiate treaty provisions with current or future treaty partners that are similar, in whole or in part, to the arbitration procedures of the proposed treaty and protocol. It is still too early to assess the effect of the addition of mandatory arbitration provisions to the Germany and Belgium treaties on the competent authority processes

with respect to those countries. Therefore, the Committee may wish to better understand how the Treasury Department intends to monitor the competent authority function, as well as arbitration developments with respect to other countries, to determine the overall effects of the new arbitration procedures on the mutual agreement process. The Committee may wish to consider what information is needed to measure whether the proposed arbitration procedures result in more efficient case resolution, both before and during arbitration, and whether they enhance the quality of the outcome of the competent authority cases. In addition, the Committee may wish to inquire as to whether and under what circumstances the Treasury Department intends to pursue similar provisions in other treaties.

The Committee may also wish to consider certain specific features of the arbitration procedures included in the proposed protocol. For example, the mandatory arbitration procedure is available under the proposed protocol only with respect to certain articles specified by the treaty partners in diplomatic notes accompanying the protocol.[5] The Committee may wish to inquire about the basis for selection of those particular articles and the implications of excluding the others. Other points that the Committee may wish to clarify include the extent to which decisions of the arbitration board will be taken into account in subsequent competent authority cases involving the same taxpayer, the same issue and substantially similar facts, and the application of the mandatory arbitration procedures to competent authority cases already pending on the date on which the proposed protocol enters into force.

Other provisions of the proposed protocol with Canada

The proposed protocol modifies a number of the provisions in the existing treaty. The rules of the proposed protocol generally are similar to rules of recent U.S. income tax treaties, the U.S. Model treaty, and the 2005 Model Convention on Income and on Capital of the Organisation for Economic Cooperation and Development (the "OECD Model treaty"). However, the existing treaty, as amended by the proposed protocol, contains certain substantive deviations from these treaties and models.

The proposed protocol amends Article IV (Residence) of the existing treaty specifically to address companies that are residents of both treaty countries. The proposed protocol provides that if such a dual-resident company is created under the laws in force in a treaty country but not under the laws in force in the other treaty country, the company is deemed to be a resident only of the first treaty country. If that rule does not apply (for example, because a company created in one country is continued in the other country in accordance with its corporate law), the competent authorities of the treaty countries must endeavor to settle the question of residency by mutual agreement and determine the mode of application of the treaty to the company. In the absence of such an agreement, the company is not considered to be a resident of either treaty country for purposes of claiming any benefits under the treaty.

The proposed protocol also amends Article IV of the existing treaty to provide specific rules regarding the circumstances in which amounts of income, profit, or gain are deemed to be derived through or paid by fiscally transparent entities. In general, an amount of income, profit, or gain is considered to be derived by a resident of a treaty country if (1) that person is considered under the taxation law of that country to have derived the amount through an entity, other than an entity that is a resident of the other treaty country, and (2) by reason of that entity being treated as fiscally transparent under the laws of the first treaty country, the treatment of the amount under the taxation law of that country is the same as its treatment would be if that amount had been derived directly by that person. Notwithstanding the general rule, an amount of income, profit, or gain is considered not to be paid to or derived by a person who is a resident of a treaty country if (1) that person is considered under the taxation law of the other treaty country as deriving the amount through an entity that is not a resident of the first treaty country, but (2) by reason of the entity not being treated as fiscally transparent under the laws of that treaty country, the treatment of the amount under the taxation law of that country is not the same as its treatment would be if that amount had been derived directly by the person. These rules are consistent with present U.S. tax rules.

The proposed protocol provides an additional rule applicable in the area of fiscally transparent entities that is new to the U.S. tax treaty network. Under this new rule, an amount of income, profit, or gain is not considered to be paid to or derived by a person who is a resident of a treaty country if (1) the person is considered

[5] These articles are: Article IV (Residence), but only to the extent the case relates to the residence of natural persons; Article V (Permanent Establishment); Article VII (Business Profits); Article IX (Related Persons); and Article XII (Royalties), but only to the extent the case relates (1) to the application of Article XII to transactions involving related persons, or (2) to an allocation of amounts between taxable and non-taxable royalties.

under the tax law of the other treaty country to have received the amount from an entity resident in the other treaty country, but (2) by reason of the entity being treated as fiscally transparent under the laws of the first treaty country, the treatment of the amount received by that person under the tax law of that country is not the same as its treatment would be if the entity were treated as not fiscally transparent under the laws of that country. Thus, treaty benefits may not be claimed with respect to such payments. There is some uncertainty with regard to how this rule applies to deductible payments made by hybrid partnerships, and the Committee may wish to inquire about this point.

The proposed protocol amends Article V of the existing treaty to add a special rule under which services performed by an enterprise of a treaty country in the other treaty country may give rise to a permanent establishment in the other country if the enterprise exceeds certain levels of presence in the other country and if certain other conditions are met. The special rule applies if the enterprise does not have a permanent establishment in the other country by virtue of any of the customary treaty standards. A similar provision appears in several existing U.S. tax treaties with developing countries (and in the proposed treaty with Bulgaria), but this is the first time such a provision has been proposed with a developed country. If certain additional conditions are met, the provision would subject individual employees to taxation as well. There are several unresolved questions regarding the administration of this provision. The Committee may wish to inquire whether active discussion is occurring between the United States and Canada on these matters, and whether these questions will be resolved before the protocol becomes effective.

The proposed protocol applies the treaty partners' interpretation of the arm's-length standard in a manner consistent with the OECD Transfer Pricing Guidelines to the attribution of profits to a permanent establishment under Article VII, taking into account the different economic and legal circumstances of a single legal entity. Under the proposed protocol, the business profits to be attributed to a permanent establishment include only the profits derived from the assets used, risks assumed, and activities performed by the permanent establishment. The proposed protocol also amends Article VII of the existing treaty to clarify that income may be attributable to a permanent establishment that no longer exists in one of the treaty countries. In addition, the proposed protocol provides that income derived from independent personal services (i.e., income from the performance of professional services and of other activities of an independent character) is included within the meaning of the term "business profits." Accordingly, the treatment of such income is governed by Article VII rather than by present treaty Article XIV (Independent Personal Services), which the proposed protocol deletes. These new rules are similar to provisions included in other recent U.S. treaties and protocols, including the U.S Model treaty.

The proposed protocol modifies Article X (Dividends) of the present treaty to reflect more closely the dividend provisions included in the U.S. Model treaty and recent U.S. income tax treaties. The modifications include a revised definition of the term "dividends" and an updated special rule that applies to dividends paid by U.S. REITs.

The proposed protocol replaces Article XI (Interest) of the present treaty with a new article that generally provides for exclusive residence-country taxation of interest. Limited exceptions permit source-country taxation of interest if the beneficial owner of the interest carries on, or has carried on, business through a permanent establishment in the source country and the debt-claim in respect of which the interest is paid is effectively connected with that permanent establishment. Two anti-abuse provisions relating to contingent interest payments and residual interests in real estate mortgage investment conduits also permit source-country taxation of interest. Special rules apply to cases involving a non-arm's-length interest charge between a payer and a beneficial owner that have a special relationship.

The proposed protocol conforms Article XII (Royalties) to the proposed elimination of Article XIV (Independent Personal Services) and clarifies the treatment of income attributable to a permanent establishment that has ceased to exist.

The proposed protocol modifies Article XIII (Gains) of the present treaty in two principal respects. First, the proposed protocol narrows the emigration exception to the Article's rule providing for exclusive residence-country taxation of gains from the alienation of property in cases other than those specifically enumerated in Article XIII. The proposed protocol provides that this exception will not apply if the property was treated as alienated immediately before an individual's emigration. Second, the proposed protocol provides a revised election intended to coordinate U.S. and Canadian taxation of gains in the case of timing mismatches.

The proposed protocol conforms Article XV (Dependent Personal Services) of the present treaty to the U.S. and OECD Model treaties, as well as to the proposed

elimination of Article XIV (Independent Personal Services), and broadens the definition of "remuneration. In addition, the proposed protocol changes the rules with respect to calculating the number of days an individual is present in the other treaty country for purposes of determining if a resident of one treaty country may be taxed by the other treaty country. The proposed protocol also contains provisions intended to eliminate potential abuses through the use of intermediary employers. The diplomatic notes exchanged in connection with the proposed protocol set forth new rules for allocating income from the exercise or disposal of an option between the two treaty countries.

The proposed protocol modifies some of the existing treaty rules of Article XVIII of the present treaty (Pensions and Annuities), mostly to address Roth individual retirement accounts, and adds several new provisions that address cross-border pension contributions and benefits accruals. Many of the new rules are similar to those found in the U.S. Model treaty, but several reflect the uniquely large cross-border flow of personal services between Canada and the United States, including the large number of cross-border commuters. These rules are intended to remove barriers to the flow of personal services between the two countries that could otherwise result from discontinuities under the laws of each country regarding the deductibility of pension contributions and the taxation of a pension plan's earnings and accretions in value. In addition, the proposed protocol adds a new provision to address the source of certain annuity or life insurance payments made by branches of insurance companies.

The proposed protocol replaces Article XX (Students) of the present treaty with a new article that generally corresponds to the treatment provided under the present treaty. The proposed protocol adds a one-year limitation on the exemption from income tax in the host country in the case of apprentices and business trainees.

The proposed protocol modifies Article XXI (Exempt Organizations). The new rules are intended to permit charitable-type organizations to invest indirectly and to pool their investments with pension-type organizations.

The proposed protocol adds a new paragraph to Article XXII (Other Income) of the treaty for guarantee fees. The new paragraph provides that compensation derived by a resident of a contracting state in respect of a guarantee of indebtedness shall be taxable only in that state, unless the compensation is business profits attributable to a permanent establishment in the other contracting state, in which case Article VII (Business Profits) shall apply.

The proposed protocol changes the obligations of Canada under Article XXIV (Elimination of Double Taxation) of the treaty with respect to dividends received by a Canadian company from a U.S. resident company. Under the proposed protocol, a Canadian company receiving a dividend from a U.S. resident company of which it owns at least 10 percent of the voting stock, is allowed a credit against Canadian income tax for the appropriate amount of income tax paid or accrued to the United States by the dividend paying company with respect to the profits out of which the dividends are paid.

The proposed protocol revises the general rules of Article XXV (Non-Discrimination) of the present treaty to bring those rules into closer conformity with the U.S. Model treaty and recent U.S. income tax treaties. The proposed protocol generally prohibits a treaty country from discriminating against nationals of the other treaty country by imposing on those nationals more burdensome taxation than it imposes or may impose on its own nationals in the same circumstances.

The proposed protocol modifies Article XXVI A (Assistance in Collection) of the present treaty to further limit, in a narrow class of cases, one treaty country's obligation to assist the other treaty country in collecting taxes. The modifications also explicitly provide that the assistance-in-collection provisions apply to contributions to social security and employment insurance premiums levied by or on behalf of the government of a treaty country.

The proposed protocol replaces Article XXVII (Exchange of Information) of the present treaty with rules similar to those in the U.S. model treaty. The proposed rules generally provide that the two competent authorities will exchange such information as may be relevant in carrying out the provisions of the domestic laws of the United States and Canada concerning taxes to which the treaty applies to the extent the taxation under those laws is not contrary to the treaty.

The proposed protocol amends the saving clause in Article XXIX (Miscellaneous Rules) to bring the treaty generally in conformity with the U.S. taxation of former citizens and former long-term residents under section 877 of the Code. The proposed protocol provides that notwithstanding the other provisions of the treaty, a former citizen or former long-term resident of the United States, may, for a period of ten years following the loss of such status, be taxed in accordance with the laws of the

United States with respect to income from sources within the United States (including income deemed under the domestic law of the United States to arise from such sources). Section 877 is applicable to individuals who relinquish their U.S. citizenship or cease to be a lawful permanent resident prior to June 17, 2008.

For any individual who relinquishes U.S. citizenship or ceases to be a lawful permanent resident of the United States on or after June 17, 2008, a new set of rules applies. In general, to the extent those rules impose U.S. tax on an individual after the individual expatriates, they require or deem the individual to waive any rights to claim a reduction in U.S. tax under a U.S. tax treaty and any other rights under a U.S. tax treaty that would preclude the assessment or collection of tax imposed by the new rules.

The proposed protocol replaces Article XXIX B (Taxes Imposed by Reason of Death) of the present treaty with a new article that generally addresses certain concerns regarding the application of Canadian tax rules and regarding the availability of tax credits or deductions when the United States and Canada impose tax on the same items of income or property.

Article 27 of the proposed protocol provides for the entry into force of the proposed protocol. The provisions of the proposed protocol are generally effective on a prospective basis. However, the provisions with respect to dual-residence tie breakers (Article 2 of the proposed protocol) and an emigrant's gain (Article 8 of the proposed protocol) are effective retroactive to September 17, 2000. In certain situations, the reduction of interest withholding rates is also retroactive, with the initial phase-in rate applicable for the year in which the proposed protocol becomes effective. Also, the provisions for assistance in the collection of taxes are retroactively effective to revenue claims that have been definitively determined after November 9, 1985.

With respect to certain payments through fiscally transparent entities and the new provisions regarding permanent establishments, the proposed protocol is effective as of the first day of the third year that ends after the proposed protocol enters into force. Special rules apply for determining when to start counting (1) days present, (2) services rendered, and (3) gross active business revenues for purposes of the permanent establishment provision. With respect to the arbitration provisions, the proposed protocol clarifies that a competent authority matter currently in progress will be deemed to have started on the date on which the proposed protocol enters into force.

Iceland

The proposed treaty replaces the existing treaty that was signed in 1975. The rules of the proposed treaty generally are similar to rules of recent U.S. income tax treaties, the U.S Model treaty, and the OECD Model treaty. However, the proposed treaty contains certain substantive deviations from these treaties and models.

The proposed treaty contains provisions under which each country generally agrees not to tax business income derived from sources within that country by residents of the other country unless the business activities in the taxing country are substantial enough to constitute a permanent establishment (Article 7). Similarly, the proposed treaty contains certain exemptions under which residents of one country performing personal services in the other country will not be required to pay tax in the other country unless their contact with the other country exceeds specified minimums (Articles 7, 14, and 16). The proposed treaty also provides that pensions and other similar remuneration paid to a resident of one country may be taxed only by that country, and only at such time and to the extent that a pension distribution is made (Article 17).

The proposed treaty provides that dividends and certain gains derived by a resident of either country from sources within the other country generally may be taxed by both countries (Articles 10 and 13); however, the rate of tax that the source country may impose on a resident of the other country on dividends may be limited by the proposed treaty. The proposed treaty provides that, subject to certain rules and exceptions, interest and most types of royalties derived by a resident of either country from sources within the other country may be taxed only by the residence country (Articles 11 and 12). Notwithstanding this general rule, the source country may impose tax on certain royalties in an amount not to exceed five percent of such royalties.

In situations in which the country of source retains the right under the proposed treaty to tax income derived by residents of the other country, the proposed treaty generally provides for relief from the potential double taxation through the allowance by the country of residence of a tax credit for foreign taxes paid to the other country (Article 22).

The proposed treaty contains the standard provision (the "saving clause") included in U.S. tax treaties pursuant to which each country retains the right to tax its resi-

dents and citizens as if the treaty had not come into effect (Article 1). In addition, the proposed treaty contains the standard provision that the treaty may not be applied to deny any taxpayer any benefits to which the taxpayer would be entitled under the domestic law of a country or under any other agreement between the two countries (Article 1).

The proposed treaty (Article 19) generally provides that students, business trainees, and researchers visiting the other treaty country are exempt from host country taxation on certain types of payments received.

The proposed treaty includes the standard provision (Article 20) that assigns taxing jurisdiction over income not addressed in the other articles of the proposed treaty. In general, such income is taxable solely by the residence country. The proposed treaty provides authority for the two countries to resolve disputes (Article 24) and exchange information (Article 25) in order to carry out the provisions of the proposed treaty.

The provisions of the proposed treaty will have effect generally on or after the first day of January following the date that the proposed treaty enters into force. The proposed treaty allows taxpayers to temporarily continue to claim benefits under the present treaty for up to an additional year if they would have been entitled to greater benefits under the present treaty. In addition, a teacher entitled to benefits under the present treaty at the time the proposed treaty enters into force will continue to be entitled to the benefits available under the present treaty for as long as such individual would have been entitled to the previously existing benefits.

Bulgaria

The United States and Bulgaria do not have an income tax treaty currently in force. The rules of the proposed treaty and protocols generally are similar to various rules of recent U.S. income tax treaties, the U.S. Model treaty, the OECD Model treaty, and the 1980 United Nations Model Double Taxation Convention between Developed and Developing Countries, as amended January 11, 2001 ("the U.N. Model treaty"). However, the proposed treaty, as amended by the proposed 2007 and 2008 protocols, also contains certain substantive deviations from these treaties and models.

The proposed treaty contains provisions under which each country generally agrees not to tax business income derived from sources within that country by residents of the other country unless the business activities in the taxing country are substantial enough to constitute a permanent establishment (Article 5). The proposed treaty includes a special rule under which services performed by an enterprise of a treaty country in the other treaty country may give rise to a permanent establishment in the other country if the enterprise's activities in the other country occur for a certain number days and if certain other conditions are met. The special rule applies if the enterprise does not have a permanent establishment in the other country by virtue of any of the customary treaty standards.

The proposed treaty provides that dividends, interest, royalties, and certain capital gains derived by a resident of either country from sources within the other country generally may be taxed by both countries (Articles 10, 11, 12, and 13); however, the rate of tax that the source country may impose on a resident of the other country on dividends, interest, and royalties may be limited by the proposed treaty (Articles 10, 11, and 12). Withholding tax on dividends is limited to 10 percent in most cases and is limited to five percent for dividends received by a company owning at least 10 percent of the dividend-paying company. A zero rate of withholding tax generally applies to dividends received by pension funds. In general, withholding tax on interest and royalties is limited to five percent under the proposed treaty. Under the proposed 2007 protocol, the treaty countries agree to reconsider source-country taxation of interest and royalties arising in Bulgaria and beneficially owned by a resident of the United States, at a time that is consistent with the December 31, 2014 conclusion of the transition period under a European Union Council Directive applicable to interest and royalties deemed to arise in Bulgaria and beneficially owned by a resident of the European Union.

In situations in which the country of source retains the right under the proposed treaty to tax income derived by residents of the other country, the proposed treaty generally provides for relief from the potential double taxation, in the case of residents of the United States, through the allowance of a credit for foreign taxes paid to Bulgaria, and, in the case of residents of Bulgaria, through a combination of credits and exemptions (Article 22).

The proposed treaty contains the standard provision (the "saving clause") included in U.S. tax treaties pursuant to which each country retains the right to tax its residents and citizens as if the treaty had not come into effect (Article 1). In addition, the proposed treaty contains the standard provision providing that the treaty may

not be applied to deny any taxpayer any benefits the taxpayer would be entitled under the domestic law of a country or under any other agreement between the two countries (Article 1).

The proposed treaty includes the standard provision (Article 20) that assigns taxing jurisdiction over income not addressed in the other articles of the proposed treaty. In general, such income is taxable solely by the residence country. The proposed treaty provides authority for the two countries to exchange information (Article 25) in order to carry out the provisions of the proposed treaty. The proposed treaty also contains a detailed limitation-on-benefits provision to prevent the inappropriate use of the treaty by third-country residents (Article 21).

ConclusionThese provisions and issues are all discussed in more detail in the Joint Committee staff pamphlets on the proposed protocol and treaties. I am happy to answer any questions that the Committee may have at this time or in the future.

Senator MENENDEZ. Thank you.

Mr. Beaird?

STATEMENT OF RICHARD C. BEAIRD, SENIOR DEPUTY U.S. COORDINATOR FOR INTERNATIONAL COMMUNICATIONS AND INFORMATION POLICY, BUREAU FOR ECONOMIC, ENERGY, AND BUSINESS AFFAIRS, DEPARTMENT OF STATE, WASHINGTON, D.C.

Mr. BEAIRD. Thank you, Mr. Chairman.

Mr. Chairman, ranking member Lugar, I am pleased to be here to testify in support of the five telecommunications treaties before you this afternoon and to urge the Senate's advice and consent to ratification by the President.

These treaties flow from the work of the International Telecommunications Union, the United Nations (U.N.) specialized agency for telecommunication matters. Ratification of these treaties will advance the interests of U.S. businesses, consumers, and the United States Government. These treaties have enabled U.S. businesses to secure valuable radio spectrum and allowed them to offer innovative products and services to U.S. and foreign markets.

They have also protected U.S. Government spectrum interests and ensured that critical Government programs, ranging from the International Space Station to essential equipment for weather sensing and forecasting, can operate without interference. Furthermore, these treaties have ensured that first responders can more quickly and effectively coordinate their response to natural disasters and other emergencies.

These treaties have also helped make the ITU a more transparent, nimble, and accountable international organization that better serves the interests of its member states. As a result of these treaties—as a result, these treaties are strongly supported by U.S. businesses and by the Government, subject to the declarations and reservations outlined in each of the treaty packages.

In fact, a broad range of representatives from U.S. businesses and Government agencies were involved at every step in establishing and pursuing our negotiating objectives for these treaties. By becoming a party to these five ITU instruments, we will convey to the other members of the union our commitment to these important decisions and our continuing strong support for the mission of the ITU.

Mr. Chairman, I would like to identify some of the highlights of the ITU treaties, which fall into two main categories corresponding to the world radiocommunication conferences and the pleni-

potentiary conferences. The first category involves amendments to the radio regulations, which are treaties governing the use of the radio frequency spectrum and the geostationary and non-geostationary satellite orbits.

At the 1992 World Administrative Radio Conference, the United States was successful in obtaining additional spectrum for Voice of America, spectrum allocation for low-Earth orbit satellite systems, frequency allocation for digital audio radio service, and additional spectrum for NASA projects such as the lunar and Martian missions.

At the 1995 World Radiocommunication Conference, the United States achieved new spectrum allocation for mobile satellite systems and a new allocation for non-geostationary fixed satellite services for broadband Internet.

The second category of treaties are proposed amendments to the ITU constitution and convention, which are the result of ITU plenipotentiary conferences which are the principal administrative and policy conferences of the ITU.

In 1998, the United States hosted the first plenipotentiary conference since it hosted the conference in 1947. The United States achieved several objectives at this conference including enhanced status of public and private companies participating in ITU activities, added provisions in the constitution to convene world radio conferences every 2 to 3 years to meet the challenges of a dynamic telecom environment, improved ITU's accountability through changes in the budget process.

At the 2002 Plenipotentiary Conference in Marrakesh, Morocco, that conference adopted the following. The conference developed a financial plan to balance the ITU budget and reduce expenditures by 10 percent. The conference allowed private companies to become observers at ITU council meetings, and it changed the structure of the Radio Regulations Board to make it more effective.

At the 2006 Plenipotentiary Conference held in Antalya, Turkey, the United States achieved the following results. The conference enhanced ITU budgetary process requiring ITU carry out annual review of income and expenditures. It lengthened the dates between ITU's established conferences so as to hold down costs. It enhanced member state oversight of ITU financial and administrative activities. It promoted budgetary transparency, and it preserved the private sector role within the ITU.

Mr. Chairman, this completes my summary of the treaties. Telecommunications is growing at an incredible pace, and U.S. companies are introducing new services here and abroad on a steady basis. The United States Government stands ready to move forward as rapidly as possible to bring the benefits of international telecommunications to our citizens.

It was my pleasure and honor to present this testimony. I recommend that the Senate act favorably on these treaties. This concludes my oral statement, and I have submitted a more comprehensive account in my written statement and ask that it be entered into the record.

Mr. Chairman, I stand ready to answer any questions that the committee may have. Thank you.

[The prepared statement of Mr. Beaird follows:]

PREPARED STATEMENT OF RICHARD C. BEAIRD

Chairman Menendez, ranking member Hagel, members of the subcommittee, I am pleased to be here to testify in support of the five telecommunications treaties before you this morning, and to urge the Senate's advice and consent to ratification by the President. These treaties flow from the work of the International Telecommunication Union (ITU), the United Nations' (UN) specialized agency for telecommunication matters. They are contained in the Final Acts of:

- The ITU World Administrative Radio Conference—1992
- The ITU World Radiocommunication Conference—1995
- The ITU Plenipotentiary Conference—1998
- The ITU Plenipotentiary Conference—2002
- The ITU Plenipotentiary Conference—2006

Ratification of these treaties will advance the interests of U.S. businesses, consumers and the U.S. Government. These treaties have enabled U.S. businesses to secure valuable radio spectrum and allowed them to offer innovative products and services to U.S. and foreign markets. They also have protected U.S. Government spectrum interests and ensured that critical government programs ranging from the International Space Station to essential equipment for weather sensing and forecasting can operate without interference. Furthermore, these treaties have ensured that first responders can more quickly and effectively coordinate their response to natural disasters and other emergencies. These treaties also have helped make the ITU a more transparent, nimble and accountable international organization that better serves the interests of its Member States.

As a result, these treaties are strongly supported by U.S. businesses and by the U.S. Government, subject to the declarations and reservations outlined in each of the treaty packages. In fact, a very broad range of representatives from U.S. businesses, and government agencies were involved at every step in establishing and pursuing U.S. negotiating objectives for these treaties. By becoming a party to these five ITU instruments, we will convey to the other members of the Union our commitment to these important decisions and our continuing strong support for the mission of the ITU.

Before I summarize what each of the treaties does, it might be helpful for me to quickly share with you some background about the ITU and how the United States organizes its participation in the negotiations that led to these treaties.

The International Telecommunication Union was formed in 1865 when European countries saw the need to work together to facilitate telegraphic communications across their borders. Today, the ITU is involved in every phase of global telecommunications, working to maintain international cooperation among its 191 Member States for management of global spectrum use, and the adoption of international telecommunication standards, and to foster the expansion of telecommunication systems and services in developing countries. ITU's purposes and activities are governed by several international instruments, including the Constitution, the Convention, and the Administrative Regulations.

The organization is unusual among UN agencies in that its membership also includes 715 Sector Members (86 of which are from the United States) and 164 Associates, representing companies and organizations with an interest in telecommunications. This feature is particularly vital to U.S. interests, in view of our reliance on the private sector for the provision of telecommunications networks and services on both the national and international levels, and in view of the dependence of many U.S. companies on effective communications to support their multinational operations.

As a result of the 1992 Plenipotentiary Conference, the ITU was reorganized to give it greater flexibility to adapt to today's increasingly complex, interactive, and competitive environment. Consequently, the Union is organized into three Sectors, corresponding to its three main areas of activity: (1) Telecommunication Standardization (ITU-T); (2) Radiocommunication (ITU-R); and (3) Telecommunication Development (ITU-D). The reorganization also introduced a regular cycle of conferences to help the Union rapidly respond to new technological advances.

The Union's three sectors represent an extremely diverse comm unity, ranging from regulators to users, manufacturers to service providers, as well as consumers. In one form or another, international telecommunications involve every government agency and touch most aspects of A merican business and the public in general. Hence, the work of the ITU is of great importance and interest to the United States.

The Union convenes Plenipotentiary Conferences to set the Union's general policies, which often are reflected in amendments to the ITU Constitution and Conven-

tion, and World Radiocommunication Conferences (WRCs) to revise international Radio Regulations. Three of the treaties before the Committee are the result of the Union's top policy making body, the Plenipotentiary Conference, and the remaining two treaties are the result of WRCs.

The Department of State's responsibility is to coordinate U.S. participation in the activities of the U nion. This includes the presentation of U.S. proposals to the ITU and its member countries, development of strategies and positions relating to conference issues, and assembly of well-qualified delegations from both the public and private sector to carry out the complex and often technical negotiations. For these five treaties which amend the ITU Constitution and Convention, and the Radio Regulations, the Department is assisted in the detailed preparations for the ITU conferences by the Federal Communications Commission (FCC) and the National Telecommunications and Information Administration (NTIA) in the Department of Commerce. The FCC regulates all non-Federal use of the radio spectrum and all interstate telecommunications as well as all international communications that originate or terminate in the United States. The NTIA manages Federal use of the radio spectrum and is the President's principal adviser on telecommunications and information policy issues, representing the Executive Branch in both domestic and international telecommunications and information policy activities.

One important advantage of this extensive national effort is that it ensures the United States is well prepared to negotiate at the conferences. Moreover, private groups and individuals have the opportunity to express their views at each stage of the process, from initial conception of ideas to the eventual adoption of the national regulations.

I will now give a summary of the treaties that fall into two main categories, corresponding to the W RCs and the Plenipotentiary Conferences.

The first category involves amendments to the Radio Regulations which are treaties governing the use of the radio-frequency spectrum and the geostationary and non-geostationary satellite orbits. At the 1992 World Administrative Radio Conference (WARC), the United States was successful in obtaining a considerable amount of additional spectrum to relieve frequency congestion in the existing broadcasting bands used by Voice of America. Allocation for Low Earth Orbit (LEO) satellite systems to enable voice-grade telephony and data was one of the most difficult and complex debates during WARC-92 and one of the highest U.S. priorities and achievements. The conference essentially adopted the U.S. allocation proposal. The United States also secured a Satellite Digital Audio Radio

Service frequency allocation. In support of NASA's communication needs, the U nited States obtained additional spectrum for such programs as the International Space Station, lunar and Mars missions, and NASA's next-generation robotic deep space exploration programs.

At the 1995 World Radiocommunication Conference (W RC), the United States achieved a new spectrum allocation that would permit global deployment of new satellite technologies, specifically, Mobile Satellite Systems. This allocation was critical to the future operation of LEO satellite systems, which are used for expanding communications and observation networks. WRC-95 also acted favorably on the U.S. spectrum proposal for non-geostationary fixed satellites. This new technology paved the way for U.S. industry to provide satellite based global broadband Internet to remote regions. All these achievements are reflected in the proposed amendments to the Radio Regulations for which we are seeking advice and consent.

The second category of treaties are proposed amendments to the ITU Constitution and Convention which are the result of ITU Plenipotentiary Conferences, which are the principal administrative and policy conferences of the ITU. In 1998, the United States hosted its first Plenipotentiary Conference since 1947. The United States achieved several objectives at this Conference, including enhancing the status of public and private companies that participate in ITU activities, adding a provision in the Constitution to convene W RCs every two to three years to meet the challenges of a dynamic telecom environment, and improving the ITU's accountability through changes in the budget process. All of these changes improved the function of the ITU and strengthened the role of the private sector within the ITU.

The 2002 Plenipotentiary Conference in Marrakesh, Morocco, adopted several amendments supported by the U nited States to improve management, functioning and finances of the ITU. Because of ITU's serious budget shortfalls, the United States led in the effort to develop a financial plan that balanced the ITU budget and reduced 10% of program expenditures. One of the U.S. proposed amendments allows private companies to be represented as observers at ITU Council meetings. A nother broadened the field of potential candidates to the ITU's Radio Regulation Board (RRB). These and other amendments approved by the 2002 Plenipotentiary

Conference have made it easier for the ITU to respond to changes in the telecom munications environment.

The 2006 Plenipotentiary Conference held in Antalya, Turkey, adopted new provisions to enhance the ITU budgetary process by requiring that the ITU Council carry out an annual review of income and expenditures and by advancing the deadline for budget contributions. The Conference also adopted another fiscally responsible measure by lengthening the dates between ITU's established Conferences and Assemblies so as to hold down costs. The United States achieved many of its objectives at this Conference, including enhancing Member State oversight of ITU financial and administrative activities, promoting budgetary transparency, and preserving the role of the private sector in the ITU.

Mr. Chairman, this completes my summary of the treaties. Telecommunication is growing at an incredible pace and U.S. companies are introducing new services here and abroad on a steady basis. They are looking for a quick response from the U.S. Government as they conduct business in this fast-moving world. The United States understands that the ITU must encourage rapid progress in telecommunications; the ITU must be a partner in progress and a catalyst to technological innovation. The United States Government stands ready to move forward as rapidly as possible to bring the benefits of international telecommunications to our citizens.

Mr. Chairman, it was my pleasure and honor to present this testimony, and to discuss the International Telecommunication Union. In conclusion, I recommend that the Senate act favorably on these treaties. I stand ready to answer any questions that the committee may have.

Senator MENENDEZ. Thank you.

All of your statements will be fully included in the record, and we will start with 10-minute rounds since I see there is massive interest here. I think you and I, Senator Lugar, might cover the waterfront.

So let me start off. I have questions for all of you, but within my 10 minutes, let us see how far we can go.

Mr. Mundaca, with reference to the Canada protocol, that includes a provision that would broaden the current definition of permanent establishment or what is often referred to as the 183-day rule. I read it a couple of times, and maybe you can help me. The—I am sure businesses would like some help as well.

If a U.S. service enterprise doesn't have a fixed place of business in Canada, it may still be deemed to have a permanent establishment if it meets one of two tests. I won't read them because I am sure you are fully, intimately familiar with them. But a great many businesses have raised concerns with us about this provision, suggesting that particularly in relationship to Canada, it will be very hard for them to administrate.

Now I understand we have included such a provision in other treaties with developing nations, and in fact, the Bulgaria treaty includes such a provision. But as noted in Ms. McMahon's testimony, this is the first time such a provision has been included in a tax treaty with a developed nation like Canada.

Can you talk a little bit about this provision, explain why you think it works, and why was it included in this protocol? And we will start there, and I have a few other questions in this regard.

Mr. MUNDACA. Thank you, Senator.

We do—I should begin by saying we do understand the concerns with administering this provision. We have already begun discussions with Canada in the context of both in coming to an agreement on the technical explanation of the treaty that goes into a little bit more detail on what the provision provides, and we will continue those discussions to try to provide some further guidance to make this easier to administer.

As you note, this is not a new provision. It has been in treaties in the past, but never with a developed country and never with a country with whom we have such a great cross-border trade and services. And again, we do understand that we will need to provide more guidance so that companies know if they do trip the 183-day rule.

Some of the complexities of this that we know we need to address are with respect to whether projects are connected, when you have to count together certain periods of time in which you are providing services to see if you reach the 183 day. There also are some issues with determining when it is that you cross this threshold and if you will cross it in a year, if you haven't planned on doing that.

If, for example, the project takes longer than you might have thought and you wind up providing services in excess of 183 day, you may not have had the proper withholding mechanisms, estimated tax payments in place. We do understand those—those complexities.

As you may know, this is an issue that is not just between ourselves and Canada. The OECD, the 30 larger economies in the world have been wrestling with this issue as well. There are many countries who do feel that this provision is appropriate, that if someone does provide services in excess of 6 months in a 12-month period that they should be subject to tax even if they don't trip the fixed-base rule that is standard in our treaties.

That is not our view. That is not our treaty policy. We do not intend to extend this beyond those cases in which another country has offered a package of benefits with respect to this provision that we feel makes this in the best interest of the U.S.

Senator MENENDEZ. Well, you answered my next question, whether this was a change in policy. And I am glad to hear that it is not.

But let me go back to the challenge, the test that is devised here presents a number of challenges. For one thing, the sheer amount of effort and resources that would presumably have to be spent on keeping track of one's employees, its customers, its revenue stream from each country. It is pretty daunting.

In addition, what is the 12-month period? It is not necessarily tied to a fiscal year. And so, that a business would have to keep continuous records in order to determine if during any consecutive 12-month period—it is like a revolving 12-month period—they had crossed the line.

And Joint Tax, I think, has raised concerns regarding how this provision interacts with amendments made under the protocols of Article 15 of the treaty in relation to the treatment of employees.

So have you thought about these challenges as we move forward?

Mr. MUNDACA. We have, and we have been in discussions with Canada regarding how best to address them. We also welcome input from your committee or from the business community about the best ways to make this administerable for all of us. As you mentioned, this is a rolling 12-month period. It is not tied to a fiscal year. It will require record keeping.

One of the issues we think we need to address that could provide some clarity around these issues is, again, what the definition is of the connected projects for which you do have to aggregate peri-

ods. So I think a clear definition of that will provide some relief to taxpayers so they do know when they can cut off counting days with respect to a particular provision of services.

I should also note that some other variants of this provision, one that the OECD is considering is broader than we have provided here. They do not have the restriction we have in our provision regarding the geographic coherence. That is, if you are not providing services in one place, our rule doesn't apply. THE OECD rule is broader in that extent.

So we have tried to build in some safeguards for overbreadth, but we do recognize that we do have more work to do. There is a delayed effective date on this. We will work this year and next year to provide further guidance on this.

Senator MENENDEZ. One last thing, I will just stick with you for one more concern. And I hope you take this concern back to the department seriously because I think the committee had it in its report. I raised it in the last meeting that I chaired on the question of some other treaties that we had. I want to talk about the arbitration mechanism that appears in the Canada protocol.

In the last hearing where your colleague, Mr. Harrington, was here, a concern about the fact that the arbitration mechanism in both the Germany and Belgium treaties did not provide for direct taxpayer input to the arbitration board during an arbitration proceeding. Now this—notwithstanding raising those issues in those treaties, this is not changed in the Canada protocol. The mechanism still does not provide for direct taxpayer input to an arbitration board during an arbitration proceeding.

And I know that the committee report on both of those previous treaties raised other issues, including concerns regarding treaty interpretation and the selection of arbitrators, but, you know, I haven't seen the department be responsive. And I hope you can address—can we expect to see some of these concerns that have been raised dealt with in future track's treaties with similar arbitration mechanisms because if not, speaking as one Senator, I will have difficulties in being as supportive as I have been to date.

Mr. MUNDACA. We understand, and we appreciate your past support, and we understand the concerns. They were not taken onboard with respect to the Canada provision, as you point out. Not because we didn't regard them as valid or important, but simply because that had been agreed to before we got the input with respect to Germany and Belgium. Those provisions, all of them were negotiated approximately the same time, and we had locked down that issue with Canada.

But we do take those concerns seriously. They will be reflected in future arbitration provisions. We will certainly raise them with treaty partners we talk to about this provision. Again, it is a negotiation. What their reaction will be to the issues you raised with respect to taxpayer input, precedential value of decisions, the authorities for the arbitration board to consider, and the choice of the arbiters, please know we will raise all those issues with people we negotiate with in the future.

Senator MENENDEZ. All right. Ambassador Balton, let me just take one or two questions with you in the time I have remaining.

Did the U.S. industry groups that are affected by these environmental treaties that we are considering before the committee today participate in the negotiations? And to the extent that they did, did they support the treaties, and have they voiced any specific concerns?

Ambassador BALTON. Let me take each of the treaties separately.

Senator MENENDEZ. Yes, if you could put your microphone on?

Ambassador BALTON. Thank you, Senator. Let me take you to those treaties separately on that question.

With respect to the London protocol, the American Association of Ports and Harbors was involved in the negotiations of this, and indeed, this group attends the meetings of both the London convention and now the London protocol regularly.

The U.S. industry group that is most affected or would be most affected by U.S. ratification is actually our dredging industry. And the U.S. industry association in this field, the Dredging Contractors of America, have indicated that they are fully aware of the protocol and support its objectives.

With respect to the anti-foulants convention, here, the U.S. anti-fouling paint industry favors this convention. Why? Because it promotes a single regulatory program for all countries. That will likely increase the use of environmentally friendly anti-foulants that they, the U.S. industry, have developed. U.S. shipyards are also interested in the single international standard because it provides a more level playing field as between them and shipyards in other countries.

And finally, the U.S. ship owners and operators, what they most want is an effective set of anti-fouling systems that do not increase their costs. They have already moved on, away from the anti-foulants that are prohibited under the convention to use the environmentally friendly anti-foulants that are permitted for use, both under the convention and U.S. law. So they support our moving forward, too.

Finally, with respect to the LBS protocol, the land-based sources protocol, I should start by saying that our entire approach to the negotiation of this treaty was to create a set of environmental standards that the United States was already meeting or exceeding. The idea was to bring our neighbors in the Caribbean region, most of whom are developing countries, up to or at least close to U.S. standards.

And because of this approach, which was successful, U.S. industry was not directly involved in the negotiations. U.S. ratification of this treaty will not have a significant bearing on their activities. We have not heard and are not aware of any opposition to U.S. ratification from dischargers, agricultural interests, or other similar U.S. industry stakeholders.

We fully expect that a wide variety of other U.S. industries who will stand to benefit from stronger environmental protection of the oceans support ratification of the protocol. Here, I am thinking of the U.S. fishing industry, the U.S. tourism industry, among others.

Finally, I would note that U.S. negotiators of this protocol did consult throughout the negotiations with officials from the U.S. States and territories that border this region. Those include Texas,

Louisiana, Mississippi, Alabama, Florida, as well as the Commonwealth of Puerto Rico and the territory of the Virgin Islands.

Senator MENENDEZ. So all of the industries that did participate with you, they are, as I hear your answer, supportive and raise no concerns?

Ambassador BALTON. That is a fair summary, sir.

Senator MENENDEZ. Thank you very much.

Senator Lugar?

Senator LUGAR. Thank you, Mr. Chairman.

Mr. Beaird, I would like to just query this point about this particular timing for the ITU treaties. My understanding is that revisions to the ITU radio regulations were concluded in 1992 and 1995, respectively. They were submitted to the Senate for advice and consent in 2002 and 2004.

Now why did nearly a decade elapse before the executive branch sought Senate advice and consent on these instruments? And given the significant passage of time and the vast changes in the telecommunications sector and innovating period, why does the administration consider important that the Senate act upon these instruments now?

Mr. BEAIRD. Thank you very much, Senator Lugar.

We are quite aware of the time lapse that has occurred between the final acts of the treaty—these final acts of these conferences and the present submission for advice and consent. We are reviewing that process within the department. We are aware that oftentimes priorities within the department do not elevate telecommunications treaties to the position that, in some cases, we would prefer in the Economic and Energy Bureau, but we are talking with colleagues about that to remedy the situation.

Secondly, Mr. Chairman—Senator Lugar and Mr. Chairman, the implementation of these final acts do take place within the Administrative Procedures Act of the FCC and the National Telecommunications and Information Administration. As such, we rely upon them to tell us the timing of the implementation of the final act. So we work closely with those agencies to make sure that no one is disadvantaged.

However, we also—and thirdly, we also are having conversations with the staff of your committee to assess how we can best move forward so that we can shorten the length of time between the final acts and their submission for advice and consent.

Senator LUGAR. I appreciate that response, and you have been very candid that sometimes, as you say, the priorities within the department have not elevated this perhaps in such a timely way. This is, I suppose, one of the problems with the treaties, all of them that we are discussing today. These are of vast significance to American business, to those who are innovating an American society.

And yet at the same time, they do not have frequently the currency of warfare or threatened international conflagrations and so forth, even though the amount of money involved—the jobs and so forth—are vast and not really recognized. That is why I pursued this because in telecommunications, as you would testify and would know more about it than I would, the amount of innovation, extraordinary changes in this period of time really would tax the

abilities of everyone who was trying to get their arms around the problem and bring about equity, fairness, accessibility, all the things that telecommunications people are interested in.

This leads me to sort of the second question. To what extent the new treaties lead to more private industry participation with the ITU? In other words, are you informed in a timely way by people who are on the frontiers, figuring out new ways of communicating so that the regulations with which you are entrusted not only are enforced, but there is some relevance to what you are enforcing as compared to what is actually occurring in the world?

Mr. BEAIRD. Senator Lugar, we made, as a fundamental purpose of the 1998 Plenipotentiary in Minneapolis, the goal to enhance the role of the private sector in the ITU, and we think we have accomplished that in a number of areas.

First of all, we have given an opportunity to participate in leadership positions in the ITU, to chair committees at conferences that they—the conferences that have a bearing upon the future of their businesses and an opportunity for them to have an input into the innovative process of the ITU to bring these new services to the marketplace.

Secondly, we have given them a wider opportunity to participate in actual meetings of the ITU as in the sense that they are now observers at the council meetings of the ITU, the governing board of the ITU.

Our assessment is that if you look at the U.N. system as a whole, we believe that we have achieved a balance between the intergovernmental organization that the ITU is and the need to bring to that organization a private sector participation and leadership. We think we have set the bar very high for the U.N. system, but we are also continuing to review the situation in the ITU, to make sure that other opportunities, as appropriate, can be given to the private sector.

Senator LUGAR. Are the companies and the industries involved supportive of these treaties? If they were sitting at the table with you, would they be testifying enthusiastically or strongly, or how would you characterize their feelings?

Mr. BEAIRD. Well, I am confident, having spent many years working very closely with them, that they would be very supportive of these treaties. They would only underscore your comment as to the need to get them up here quicker than we have, and we are also consulting with industry on that point.

Senator LUGAR. Thank you.

Mr. Mundaca, let me just explore for a moment this term treaty shopping, which arises whenever we have one of these treaties, and the fact that the new Iceland treaty closes a much-exploited loophole. Now, what was the loophole? Describe why the problems of the Iceland situation were difficult and why Americans should be concerned about that?

Mr. MUNDACA. Thank you, Senator.

The concern is that when we negotiate treaties, we negotiate them based on reciprocal benefits provided by, for example, Iceland to our residents and for us to provide benefits to Iceland residents. Through treaty shopping, through various techniques, residents of third countries can access those benefits.

So, for example, we saw in the case of Iceland, and we are seeing it with respect to Hungary as well, is that third country residents set up corporations or other entities in those jurisdictions. Those entities then derive interest payments, for example, from the United States. They claim zero withholding on that, and that income is not subject to tax in the jurisdiction, either Iceland or Hungary, and the owners are able to access the U.S. treaty, achieve zero withholding, not pay tax in the other jurisdiction, and get the benefits of the treaty when, in fact, they should not.

The inclusion of limitation on benefits provisions prevents that. We have other mechanisms to go after some of these structures, some of the anti-concurrent rules that we have, et cetera. But limitation on benefits provisions are the best way to prevent the treaties by being accessed by third country residents.

We saw huge debt flows. We delivered a report to Congress at the end of 2007 that reported on some of these issues. And again, although they are not some of our leading trading partners, both Iceland and Hungary were within the top 10 of recipients of interest payments out of the U.S. And again, we think primarily because of these loopholes in the treaties.

Senator LUGAR. Well, how, as a practical matter, do you identify these third countries? For example, is Iceland under the treaty responsible for saying the people taking advantage of this treaty are our citizens, they are Icelanders. In other words, there are no Swedes or Norwegians or what have you?

Mr. MUNDACA. Right.

Senator LUGAR. Or front companies. In other words, an Iceland representative, but really behind it is the capital flow coming in from somewhere else, taking advantage of the namesake on the door there.

Mr. MUNDACA. And that is the issue is under the current treaty, there is no such obligation to determine who the owners are of these entities in order to grant that entity benefit. So the Icelandic entity can be owned by just about anybody in the world and claim benefits under our treaty. With the inclusion of the limitation on benefits provision, that would end. And it would have to be reporting and proving of the owners of the companies before they could claim benefits.

Senator LUGAR. So you are relying on the reporting system and the integrity of the country that we are dealing with.

Now how does the information sharing business work in this case? In other words, how deeply can we probe down in the weeds as to who is doing what in what country? To what extent are there privacy issues involved in these probes?

Mr. MUNDACA. There are privacy issues, and the privacy issues with respect to confidentiality are dealt with in the treaty. So there is no chance of the information that is gained in exchange being used inappropriately or being released. On the other hand, in the Iceland treaty, there is full exchange of information. There is no hiding behind bank secrecy laws or other laws of either the U.S. or Iceland to shield from the ownership information that is required.

Also, because we do require that information be provided in order for U.S. withholding agents, for example, to grant the lower with-

holding, we don't have to necessarily go out and get that information. That has to be provided to us in order for the lower withholding rate to apply.

Senator LUGAR. But the U.S. could send auditors to Iceland and sort of go through the books?

Mr. MUNDACA. Yes, that is right. Under the treaty, that sort of investigation is permitted.

Senator LUGAR. Thank you very much.

Thank you, Mr. Chairman.

Senator MENENDEZ. Thank you, Senator Lugar.

I just have another—we will do another round if necessary. I just have a few more questions that I would like to get on the record.

Ambassador Balton, with reference to the reverse list approach taken in the London dumping protocol, which is an improvement of the 1972 London Convention to which the U.S. is now a party, why is it that we consider it an improvement?

And secondly, while I understand that it is more restrictive, are we worried that we may find and identify other items, like carbon sequestration, as something that we think should be dumped and then find ourselves engaged in a very lengthy negotiation to amend the treaty?

Ambassador BALTON. Thank you, Senator.

We do agree that the reverse list approach represented by the protocol is better than the sort of black list approach of the convention to which we are now bound. It is simpler and more effective, in our view, and we do not foresee conflicts between the approach of the protocol and the U.S. pollution dumping program as it stands.

The list on the protocol, the white list, already includes a broad range of substances that may be considered for dumping. And this list reflects more than 35 years of worldwide experience in determining which substances may cause harm to the marine environment if dumped.

To the extent that another substance not previously considered may need to be added in the future, the London protocol parties have already shown their agility in responding to new and emerging technologies. They, in fact, amended the list once already precisely on the topic you raised, Senator. The list now includes carbon dioxide streams for purposes of sub seabed geological sequestration.

The U.S., though not a party to the protocol, supported this amendment very much. The process was quick. It took less than a year from start to finish.

There are other protections under the protocol as well. I note that there are a variety of activities that are not defined as dumping for purposes of the protocol. These include disposal into the sea of substances derived from normal operations of vessels and other craft, placement of substances in the sea for purposes other than mere disposal.

The protocol also does not cover disposal or storage of substances arising from or related to the exploration, exploitation, or processing of offshore oil, gas, or other resources. And finally, the protocol gives parties significant flexibility to dump substances in emergency or force majeure situations.

I raise these because for all these reasons, we believe that the reverse list approach does not constrain the legitimate needs of the United States or other nations on this range of issues of ocean disposal and waste management.

Senator MENENDEZ. And one last question on the protocol. What if we find an emergent situation in which something that is prohibited needs to be dumped? Is there some mechanism that deals with that?

Ambassador BALTON. Yes, sir. Article 8 of the protocol is a good example of the sophistication of this treaty in providing flexibility. There are two different situations it allows for.

First, it allows a party to issue a permit and thus create an exception to the protocol's general rules on dumping in situations of emergencies posing an unacceptable threat to human health, safety, or the marine environment when there is no other feasible alternative. This provision, the emergency permit, is actually broader than the one of the original convention to which we are now bound.

And then there is the second provision as well, which is replicated from the original convention. It contains a provision for situations of force majeure caused by weather or other immediate threats to human life or the marine environment where there is no other alternative. In these situations, dumping or incineration at sea may proceed even without the permit, although a party should conduct these things in a manner so as to minimize harm to human or marine life.

So, in light of these provisions, once again we believe the protocol provides the necessary flexibility we would need as a party.

Senator MENENDEZ. Thank you.

Mr. Mundaca, one last question. I am going back to the protocol with London. What sorts of disputes do you think are most likely to be arbitrated through the mandatory arbitration mechanism provided for in the protocol? And will that mandatory arbitration provision be applicable to disputes that have already arisen? How do you see this working?

Mr. MUNDACA. Based on the experience we have of the pending cases, I would guess—and it is just a guess—is that transfer pricing disputes would be the ones that will proceed to arbitration. Those are the ones that we have seen, in our experience, are the most difficult at this point to come to an agreement with in a timely manner.

And therefore, I would expect, looking at the types of cases that are currently pending, that those are the ones that would likely be the predominant cases that are moving to arbitration.

Regarding the coverage of current cases, they are covered. The 2-year trigger for a case moving out of the negotiation phase of the competent authority process to the arbitration phase, the trigger date will be the entry into force of the treaty, and then 2 years after that, pending cases can move into arbitration.

We are working with Canada on a mechanism for identifying cases that are currently beyond the 2-year mark that could be moved into arbitration more quickly. And we hope over the next months to get that process in place so that the taxpayers don't have to wait the full 2 years that they have already had a case in competent authority that has been unable to be resolved.

Senator MENENDEZ. All right. Thank you.

Mr. Beaird, one question for you—two questions. One is one of our key concerns in negotiating radio regulations is the ability to obtain the high-frequency bands necessary to broadcast Voice of America throughout the world. In instances where the United States has not obtained enough of the spectrum to meet its needs, it has entered reservations stating that it will take appropriate actions to maintain broadcasting.

When other countries accuse the United States of causing harmful interference and attempt to jam our broadcasts, what is our response, and how does the ITU manage these situations?

Mr. BEAIRD. Thank you very much, Mr. Chairman.

In instances in which this has occurred, and it has occurred certainly in the last 30 years and in more than one instance, the United States complains to the ITU in a filing indicating the signal's origin and its strength and the extent of time and time and duration of the interference. That complaint is then referred to the Radio Regulations Board, which makes a finding.

We have a situation currently where we have filed a complaint against a country neighboring to us, and the board has found that the origin of the signal was, in fact, from that country and has asked, pursuant to the radio regulations, that the harmful interference be resolved through the cooperation of the two countries.

Now that is an approach that is undertaken by the ITU. The ITU is not an adjudicative body. It can only recommend a solution or a resolution of the harmful interference. But the United States always, when it occurs, registers the complaint to make it known to the ITU that there is such an interference occurring.

Senator MENENDEZ. So it is not a binding determination?

Mr. BEAIRD. That is correct.

Senator MENENDEZ. All right. And one last question. The ITU was not in the best financial shape a few years ago, and I am wondering have the amendments to the budget process improved the situation, and what are the current challenges the entity faces in this area?

Mr. BEAIRD. Thank you, Mr. Chairman.

We believe we have made great progress at the ITU. In 2002, at the plenipotentiary in Marrakesh, for the first time we had a resolution adopted that called for a balanced budget at the ITU. It resulted in some—and we also indicated we wanted at least 10 percent cuts in the expenditures of the union.

There were follow-up actions. Staff levels were reduced, new software introduced, budget transparency brought about. And in 2007, at the ITU council, which adopts its budget, I am pleased to report that a balanced budget was adopted at that council.

We believe we have made great improvements at the ITU, but it is an ongoing task for us and the other member states and the sector members—that is, say, the private sector—to monitor the financial situation of the union. But we believe, at this time, the union is in far better financial shape than it was certainly in 2002.

Senator MENENDEZ. Thank you.

Senator Lugar?

Senator LUGAR. Mr. Balton, you have touched upon this, but amplify a bit more about the land-based sources protocol. Because this

protocol, as you pointed out, was concluded in 1999, which is 9 years or so ago. And so, there is a track record by this time of what kind of pollution may have been abated in the Caribbean to some extent. But can you give us sort of a mind's eye map?

How many States are a part of that protocol now, and how would you characterize the pollution situation? What is under control and what is not under control due to non-adherents or non-membership?

Ambassador BALTON. Thank you, Senator.

I am sorry to say that as we sit here today only four nations have ratified the protocol. It is not yet in force. It requires a minimum of nine to enter into force. The four that have—

Senator LUGAR. This is after 9 years, only 4 states? I see.

Ambassador BALTON. The four that are are France, which does have territories in—other parts of France in the area, Panama, St. Lucia, Trinidad and Tobago. My supposition, Senator, is that a number of other countries of the region are waiting for the United States.

Senator LUGAR. I see.

Ambassador BALTON. We were among the driving forces behind the protocol. We are one of the few developed countries in the region. We are a leader, and we have not yet ratified.

Some of that is due to other priorities. We are sorry it took as long as it has to get the protocol to the Senate. We are, nevertheless, hopeful that the protocol can go through, and we can become a party and encourage other countries in the region to become party and to bring their environmental standards up to those of the United States in this area.

The situation is not good overall. The problems of marine pollution in the Caribbean region are very real. Effluents of many sorts—agricultural runoff, domestic wastewater, other types of pollutants from land-based activities—are causing real harm. And we believe the protocol, once it is in force, can serve as a vehicle to find collective solutions to a region that we, in fact, share with many countries.

So that is our hope, and that is the reason we are seeking Senate advice and consent.

Senator LUGAR. Well, I appreciate your candor, and I appreciate even more your bringing the treaty to this point and, likewise, the Chairman holding the hearing. One of the dilemmas, and we touched upon this a little bit with the ITU situation, is that these affairs have been rumbling out there for many, many years. And I think you make a very good point that the rest of the world, in some cases, waits upon the United States to offer leadership. Or to the contrary, if we don't, others say, well, why should we care?

Now, still in the conservation mode that so many Americans, I would hope a majority, are in with concerns that are addressed by this, and I think that is shared by other countries. It is interesting that France would be one of the four, clearly not a place of residence in the Caribbean, although interests in the various countries, as you say. But in terms of the actual citizens of that area, this is really significant.

But this is not a time to complain why was there no priority. It is a time to celebrate the fact that we finally have come to the

table, have a session of this variety attended at least by two members of the committee who are deeply interested in what is going on here, as well as a good number of citizens who have come to hear what you had to say today and to see whether progress was going to occur. So I appreciate that.

Let me just raise one more question with regard to the tax treaties. And I will ask you again, Mr. Mundaca, I am just—I am curious, for instance, why some people in the business community that I have heard from are very appreciative of the Canadian treaty in particular. They think this really has very substantial significance.

Now, in part, I can understand this from a parochial standpoint. My State of Indiana has—is just seventh, I have found, in terms of trade between Indiana and Canada. But even then we are exporting about $10 billion worth of goods and services from Indiana to Canada. We are importing $6 billion. So we are producing a balance of trade of $4 billion in one State with barely 2.5 percent of the population of the country.

So this is a very significant treaty in terms of income for people in Canada and Indiana, for that matter. So I can understand why they would be interested in it. But they are saying beyond that apparently there were the questions that we were just discussing before of this binding arbitration is especially significant, maybe because there are so many elements of trade. Maybe it is so many more deals or sophisticated questions or entities that come into this.

I am wondering whether that has been the case as you have found it from testimony around the country, that because really of our trading relationship with Canada, a sizable amount, that this is not necessarily overwhelming, but at the same time it could be. The number of cases stacking up that are unresolved, justice denied for years. So that then there gets to be a good bit of indecision about the tax code.

Back here in the Congress, we change the tax code, or we don't really change it. But meanwhile, all these cases are out there. What is the caseload, just out of curiosity? And is this one reason why there is such business support for this particular treaty?

Mr. MUNDACA. I think that is exactly right that the level of trade we have with Canada, the nearness of Canada and, therefore, the opportunities for many taxpayers—not just large multi-nationals, but small businesses and individuals to engage in cross-border activity with Canada—has led to many more tax disputes than we see with other countries. And there has developed a backlog of cases with Canada people are eager to see resolved on a more timely basis.

And we are very optimistic this mechanism will speed to resolution through the negotiation process pending cases, and if they can't be settled in that—in that phase, then moved to arbitration so the taxpayers get the certainty that they deserve.

Oftentimes, taxpayers, although they always mind paying taxes, they really mind paying taxes twice. And what they really do want is certainty about where their tax needs to go and have the other country respect that determination, and that is what we hope that this mechanism will provide in this context.

There are probably more pending cases between the U.S. and Canada than we have with any other jurisdiction at this point. We get complaints about the timeliness of the resolution of those disputes, and again, we are very optimistic this mechanism can speed those along.

Senator LUGAR. Now from the standpoint outside of the business community of taxpayers in both countries, what confidence do taxpayers have generally that these businesses finally are paying taxes properly, either in Canada or the United States? Do you note a good bit of evasion through all this delay or maybe through a lack of definition to begin with?

Mr. MUNDACA. Actually, from what we have seen, at least with respect to Canada, it mostly goes the other way. Is that companies are concerned that they have a tax liability with respect to the same income stream to both Canada and the United States due to the lack of resolution of some of these large pending cases.

So at least in my experience, I have not seen cases where the issue is that neither country is seeing the income and, therefore, it goes untaxed. The issue we see more are cases in which taxpayers come forward, and there are clear double tax cases that need to be resolved.

Senator LUGAR. Thank you very much.

Thank you, Mr. Chairman.

Senator MENENDEZ. Thank you, Senator Lugar.

Let me thank you all for your testimony and the hard work you put into treaties over many years. I specifically want to thank Avril Haines from the committee staff, who has done a tremendous service preparing the materials for this hearing and making them understandable to some of us who are not intricately engaged in this work.

The record will remain open for 1 day so that committee members may submit additional questions to the witnesses, and we ask the witnesses to respond expeditiously to these questions.

And seeing no other member seeking recognition, the hearing is adjourned.

[Whereupon, at 4:00 p.m., the hearing was adjourned.]

APPENDIX

RESPONSES TO ADDITIONAL QUESTIONS FOR THE RECORD SUBMITTED TO DEPUTY ASSISTANT SECRETARY MICHAEL MUNDACA BY SENATOR JOSEPH R. BIDEN, JR.

Question. The President's Letter of Transmittal for the proposed Iceland Tax Treaty notes that because the existing treaty with Iceland from 1975 does not contain a Limitation on Benefits ("LOB") provision, which is intended to prevent so-called treaty shopping, there has been "substantial abuse of the existing Treaty's provisions by third country investors." See Treaty Doc. 110–17 at III. Please describe the evidence upon which this statement is based.

Answer. A Treasury Department report to Congress, "Earning Stripping, Transfer Pricing and U.S. Income Tax Treaties," released in November 2007 (2007 Treasury Report), describes abuses of the U.S. tax treaty network by third-country investors, particularly through inappropriate reductions in withholding tax. The 2007 Treasury Report presented data, gathered from U.S. tax returns, on deductible payments such as interest made by U.S. companies to related foreign companies located in treaty jurisdictions. The data suggested that tax treaties that have no LOB provision and a zero rate of withholding tax on deductible payments, such as our treaties with Iceland and Hungary, had begun to be abused by third-country investors. In particular, the 2007 Treasury Report notes that while in 1996 almost no U.S.-source interest was paid by foreign-controlled U.S. companies to related parties in Iceland and Hungary, payments of such interest had increased by 2004 to over $2 billion. In addition, publicly available information indicates that many of those related parties were ultimately owned by corporations from third countries. This evidence strongly suggests the existence of treaty abuse by third-country residents.

Question. Please explain how the LOB provision will be enforced against third-country investors that attempt to benefit from the treaty's provisions, should the new treaty be ratified. In addition, please describe specific enforcement challenges, if any, that the United States has faced in the past when attempting to enforce LOB provisions in other tax treaties.

Answer. The Internal Revenue Service has a multi-pronged approach to enforcing compliance with treaty LOB provisions.

With respect to payments of amounts subject to withholding, such as interest, royalties, and dividends, U.S. withholding agents (e.g., banks, brokers) are obligated to obtain, from each foreign payee, documentation on which the withholding agents can rely to treat a payment as made to a foreign person entitled to a reduced rate of withholding tax under the treaty. Absent such documentation, withholding at 30 percent is required. More specifically, foreign taxpayers who derive and beneficially own the payment must complete a Form W-8BEN (Certificate of Foreign Status of Beneficial Owner for U.S. Tax Withholding) to claim a reduced rate of withholding tax. Part II of the W-8BEN is entitled "Claim of Tax Treaty Benefits." On line 9 the beneficial owner must identify its country of residence and, if the person is not an individual, represent that it meets the LOB article of the relevant treaty.

With respect to claiming treaty benefits other than withholding tax reductions, such as a claim that a taxpayer does not have a permanent establishment in the United States, the taxpayer must file Form 8833 (Treaty-Based Return Position Disclosure Under Section 6114 or 7701(b)) attached to a Form 1120-F (U.S. Income Tax Return of a Foreign Corporation) or Form 1040 NR (U.S. Nonresident Alien Income Tax Return). Line 4 of Form 8833 requires the taxpayer to identify the LOB provision that the taxpayer relies upon to be eligible to take the treaty-based return position.

In addition, the Internal Revenue Service audits LOB compliance as part of its general assessment of whether a foreign taxpayer is eligible to claim treaty benefits. The Treasury Department understands that the IRS' audit experience indicates that

LOB issues most often arise in the context of audits of U.S. corporations that makes payments of interest, dividends, or royalties to related foreign persons.

In the end, however, the simple inclusion of a LOB article in a treaty may by itself be largely responsible for limiting treaty shopping. The 2007 Treasury Report provides evidence that the mere inclusion of a comprehensive LOB provision is a deterrent against treaty shopping.

Question. As set forth in Article 27(3) of the proposed treaty with Iceland, an unusual year-long transition period is provided for investors that are entitled to greater benefits under the 1975 treaty than the new treaty, during which they can elect to continue to benefit from the application of the 1975 treaty, rather than have the new treaty's provisions applied to them. Why was this provision included? How does this provision benefit the United States? Is this provision one that might be included in future treaties?

Answer. The transition rule coordinating the entry into force of the proposed Iceland treaty and the termination of benefits of the 1975 treaty is not an uncommon practice when an existing treaty is being replaced by a new agreement or is being amended by a new protocol. For instance, similar provisions were included in the U.S.-Belgium tax treaty (signed November 27, 2006), the U.S.-Germany protocol (signed June 1, 2006), the U.S.-U.K. tax treaty (signed July 24, 2001), and the U.S.-Denmark tax treaty (signed August 19, 1999). In order to reach agreement in 2007 with Iceland regarding inclusion of a LOB provision, we agreed to this election.

Question. U.S. income tax treaties with Hungary and Poland provide an exemption from withholding on cross-border interest payments and, as in the case of the 1975 tax treaty with Iceland, these treaties do not include an LOB provision. Is the Treasury Department negotiating protocols with Hungary and Poland in order to rectify the omission of an LOB provision? If not, why not? If so, please describe the status of those negotiations.

Answer. Updating the agreements with Hungary and Poland is a key part of the Treasury Department's effort to protect the U.S. tax treaty network from abuse. The Treasury Department has had two rounds of negotiations with Hungary already in 2008 with the aim of concluding a new agreement as soon as possible. The next round of negotiations is scheduled for September 2008, and an additional round is also scheduled, if necessary, for December 2008.

As shown in the 2007 Treasury Report, it does not appear that the U.S.-Poland tax treaty has yet been extensively exploited by third-country residents. Nevertheless, the Treasury Department has had preliminary discussions with Poland and anticipates continuing those discussions in 2008 with the goal of commencing negotiations to conclude a new agreement to update the 1976 agreement. The United States places a very high priority on bringing the proposed treaty with Iceland into force and on concluding as soon as possible negotiations with Hungary and Poland.

Beyond renegotiating the treaties with Hungary and Poland, the Treasury Department reviews the current U.S. tax-treaty network on a continuing basis to identify deficiencies in existing agreements and areas where more beneficial terms for the United States and U.S. taxpayers could be negotiated. As part of this process, anti-treaty-shopping provisions are given special scrutiny to ensure that they are functioning appropriately. Those treaties with LOB provisions that are out of date or need strengthening are given higher priority in the Treasury Department's plan for negotiations.

Question. The proposed treaty with Iceland includes special anti-abuse rules intended to deny benefits in certain circumstances in which an Icelandic-resident company earns U.S.-source income attributable to a third-country permanent establishment and is subject to little or no tax in the third jurisdiction and Iceland. Similar anti-abuse rules are included in other recent treaties, including the proposed Convention with Bulgaria. The U.S. Model Tax Treaty, however, does not include rules addressing so-called "triangular arrangements." Why? Is this a provision that might be added to the U.S. Model Tax Treaty?

Answer. The Treasury Department's current policy is to incorporate the so-called "triangular rule" into tax treaties in which the treaty partner exempts from tax certain foreign source income such that a tax treaty may be used inappropriately in conjunction with certain branch structures to exempt fully from tax certain U.S.-source payments. The Treasury Department is considering whether it is appropriate to include such a rule in the next update of the U.S. Model tax treaty.

Question. The Committee on Taxation of Business Entities of the New York City Bar has written to the Committee on Foreign Relations in reference to the so-called "derivative benefits'" test contained in, for example, Article 21(3) of the LOB provi-

sion in the proposed treaty with Iceland. In particular, the Bar's Committee on Taxation of Business Entities has stated that they "believe that there is a need for guidance in determining the scope of the dividend payment relief under such derivative provisions, due to the uncertainties involved in calculating the relevant stock ownership." Has the Office of Tax Policy considered whether it would be useful to publish guidance on this topic?

Answer. The New York City Bar Association's Committee on Taxation of Business Entities, in its May 2008 report (the NYCBA Report), suggests that there is need for guidance clarifying how ownership is calculated for purposes of the derivative-benefits rule in our recent tax treaties. The Office of Tax Policy recognizes the importance of providing published guidance with respect to income tax treaties generally, and is currently considering this and other recommendations made by the NYCBA Report.

Question. Under the U.S. Model Tax Treaty child support payments paid to a resident of a treaty country is exempt from tax in either country. The proposed treaty with Iceland, however, makes no mention of the tax treatment of child support payments. Why is that?

Answer. The absence of a special rule governing the taxation of child support payments in the proposed Iceland treaty means that the taxation of such payments would be governed by Article 20 (Other Income), which assigns the exclusive right to tax to the country of residence of the recipient. During the course of the negotiations, the Treasury Department learned that under Iceland's domestic law, most child support payments are not subject to tax. Accordingly, leaving the treatment of child support payments to Article 20 (Other Income) achieves a tax result very similar to the result under the U.S. Model rule; that is, the residence country will have the exclusive right to tax child support, but such payments are in most cases exempt from tax under the domestic laws of both the United States and Iceland.

Question. Why doesn't the proposed treaty with Iceland address the tax treatment of cross-border pension contributions?

Answer. The proposed treaty with Iceland does not address the tax treatment of cross-border pension contributions primarily for two reasons. First, the U.S. Model pension funds provision provides for deductibility in one State of contributions to a pension fund of the other State only where the pension fund "generally corresponds" to a pension fund in the first state. The provision is, therefore, only appropriate if the two countries have pension systems that are similar. During the course of negotiations, it became clear that Iceland and the United States have very different pension systems. As a result, the provision was not appropriate to include in the proposed treaty. Second, Iceland had limited flexibility in changing by tax treaty its rules for taxing pensions, because those rules are technically under Iceland's pension law, not its tax law.

Question. Like the U.S. Model Tax Treaty, the Iceland Treaty provides that pension distributions owned by a resident of a contracting country are taxable in the recipient's country of residence. The U.S. Model Tax treaty, however, contains an exception to this provision under which a pension beneficiary's country of residence must exempt from tax a pension amount or other similar remuneration that would be exempt from tax in the other contracting country where the pension fund is established, as if the beneficiary had been a resident of that other country. Why doesn't the proposed treaty with Iceland contain such an exception?

Answer. Like other departures from the U.S. Model, the omission in the U.S.-Iceland tax treaty of the exemption from tax for pension benefits that would be exempt from tax in the source country was the result of the negotiation process. Moreover, Iceland had limited flexibility in changing by tax treaty its rules for taxing pensions, because those rules are technically under Iceland's pension law, not its tax law.

Question. The U.S. Model Tax Treaty allows recipients of "income, gains, or profits" from an entity that is fiscally transparent under the tax laws of the recipient's residence to enjoy the same treaty benefits on that income as they would have if the "income, gains, or profits" had been received by them directly, so long as the income coming to them through the entity is treated no differently by their resident country than it would have been had it been received directly by them. The provision in the Iceland Treaty for fiscally transparent entities closely parallels the provision in the U.S. Model Tax Treaty. Yet, rather than referring to such entities as "fiscally transparent," the Iceland Treaty refers instead to entities that are either "a partnership, trust, or estate." See Article 1(6). Treasury's Technical Explanation makes clear that this is intended to include U.S. limited liability companies ("LLCs") that are treated as partnerships or as disregarded entities for U.S. tax pur-

poses, including LLCs with only one member. Although the meaning appears to be equivalent, why wasn't the phrase "fiscally transparent" used in Article 1(6)?

Answer. Paragraph 6 of Article 1 of the proposed treaty with Iceland does not use the U.S. Model's phrase "fiscally transparent" because that term does not have meaning under the domestic law of Iceland. During the course of the negotiations, the Treasury Department obtained agreement in principle with Iceland over the intent and application of paragraph 6 of Article 1. Accordingly, the Treasury Department believes that the rule will be interpreted and applied by Iceland consistent with the language in the U.S. Model Tax Treaty.

Question. The Convention Between the United States and the Republic of Bulgaria for the avoidance of Double Taxation and the Prevention of Fiscal Evasion With Respect to Taxes on Income, with accompanying Protocol, was signed on February 23, 2007. Before transmitting this treaty to the Senate, however, a Protocol amending the 2007 treaty was negotiated with Bulgaria. This Protocol was signed on February 26, 2008 and only after its completion, did the Executive Branch transmit the original treaty to the Senate for advice and consent. Why was the 2008 Protocol needed? What changed between February 2007 and February 2008 to necessitate amending the 2007 treaty? What is the most important correction made by the 2008 Protocol to the underlying treaty?

Answer. The 2008 Protocol made certain technical corrections to the 2007 Convention and accompanying Protocol, and addressed features of the Bulgarian tax system and treaty network that could result in a Bulgarian tax exemption for U.S. source income attributable to offshore branches of the Bulgarian company receiving the U.S. source income. To address the potential "double exemption" issue, the proposed 2008 Protocol would add a so-called "triangular rule" to the LOB provision of the proposed treaty, which is the most important addition to be made by the 2008 Protocol.

Question. Under the Bulgaria Convention, with limited exceptions, the withholding tax on cross-border royalty and interest payments would be imposed at a maximum rate of five percent. Under the accompanying protocol, the United States and Bulgaria are to reconsider source-taxation of interest and royalties arising in Bulgaria and beneficially owned by a resident of the United States, at a time that is "consistent with the conclusion of the transition period" under a European Union Council Directive applicable to interest and royalties deemed to arise in Bulgaria and beneficially owned by a resident of the European Union. The conclusion of the transition period is due to occur on December 31, 2014. Please explain the reason for including this commitment to reconsider source-taxation of interest and royalties arising in Bulgaria and beneficially owned by a resident of the United States. Is it fair to say that when you consult, you expect to negotiate an amendment to the Bulgaria Convention that would further reduce the maximum rate of withholding that can be imposed on cross-border interest and royalties arising in Bulgaria and beneficially owned by a resident of the United States?

Answer. At the conclusion of the transition period under the European Union Council Directive, Bulgaria is expected to adopt rates of withholding on cross-border interest and royalties for residents of European Union member states that are lower than the rate provided for in the proposed treaty. The provision of the 2007 Protocol is intended to memorialize the understanding between Bulgaria and the United States that the United States will have the opportunity at the conclusion of the transition period to negotiate a further protocol to the proposed treaty with Bulgaria that could reduce the maximum rate of withholding that may be imposed on cross-border interest and royalties arising in Bulgaria.

Question. Both the Bulgaria Convention and the Canada Protocol include a special rule that broadens the typical definition of a "Permanent Establishment" such that a service enterprise may still be deemed to have a Permanent Establishment in a treaty country, even if it does not have a fixed place of business in that country (the "services country"). See Article 5(8) of the Bulgaria Convention and Article 3(2) of the Canada Protocol.

A number of the terms used in this rule are somewhat ambiguous and although the Technical Explanations for the Bulgaria Convention and the Canadian Protocol help to resolve some of that ambiguity, there is still work to be done. Please describe the steps you are taking with Canada, Bulgaria, and internally to further clarify the application and operation of this provision, including the specific terms you are focused on clarifying. In particular, is work being done to further clarify what constitutes "presen[ce]" in the services country and what constitutes a "connected project"? What about the "provision of services"? Is this term, for example, intended

to include preparatory work or the collection of data from an office in one country in order to provide services in the other country?

Question. In preparing the agreed Technical Explanation of the proposed Protocol with Canada, the Treasury Department had many discussions with Canada regarding the interpretation and application of the new rule concerning the taxation of services.

Answer. If the proposed Protocol is approved by the Senate, the Treasury Department will continue these discussions with Canada. The Treasury Department's discussions with Canada to date have encompassed the interpretation of a number of terms, including "presen[ce]" in the services country, what constitutes ″connected projects,″ and the meaning of "provision of services." For example, the Technical Explanation to the proposed Protocol clarifies that paragraph 6 of Article V (Permanent Establishment) of the existing U.S.-Canada treaty applies notwithstanding the new rule for taxation of services. Paragraph 6 identifies activities with respect to which a fixed place of business will not give rise to a permanent establishment, which includes activities that have a preparatory or auxiliary character. Accordingly, days spent on preparatory or auxiliary activities shall not be taken into account for purposes of applying the services rule described in subparagraph 9(b) of Article V.

The Treasury Department recognizes that additional guidance with respect to the services rule included in both the proposed Canada Protocol and the Bulgaria Convention is needed to provide more certainty to taxpayers, and we welcome further input regarding application of the rule.

Question. Article 14(1) of the Bulgaria Convention, with certain exceptions, sets forth a general rule that if an employee who is a resident of one treaty country (the "residence country") is working in the other treaty country (the "employment country"), his or her salaries, wages, and other remuneration derived from the exercise of employment in that country may be taxed by that country—i.e., the employment country. Notwithstanding this general rule, Article 14(2) of the treaty provides that the remuneration derived by the employee from the exercise of employment in the employment country shall be taxed only by the residence country (and not the employment country) if 1) the employee is present in the employment country for 183 days or less in any 12-month period commencing or ending in the taxable year concerned; 2) the remuneration is paid by, or on behalf of, an employer who is not a resident of the employment country; and 3) the remuneration is not "borne" by a permanent establishment that the employer has in the employment country. The Canada Protocol has a variation of this provision in Article 10(2), which amends Article XV of the Canada Tax Treaty. In both treaties, the final requirement (i.e., that the remuneration is not "borne" by a permanent establishment that the employer has in the employment country), interacts with the special rule expanding the definition of a permanent establishment in a potentially problematic way.

For example, in the case of the Bulgaria Convention, it appears that the salaries, wages, and other remuneration derived by an employee performing services through a permanent establishment arising under Article 5(8) of the treaty would be subject under Article 14 to being taxed by the employment country, even if the other requirements of the test in Article 14(2) had been met (i.e., the employee had been present in the employment country for less than 183 days during any 12-month period commencing or ending in the taxable year concerned and the employee's remuneration was paid by an employer who is a resident of the other country). Is this correct? If so, the interaction of these two provisions would increase the complexities associated with the special rule contained in Article 5(8). For example, such a scenario would mean that an employer and the relevant employees would need to fulfill several tax-related obligations, including obtaining tax identification numbers and providing for the withholding of income taxes and other taxes as appropriate that would cover the period beginning on the first day such services were performed by such employee during the affected year. Please explain how the Department intends to address the problems presented by this result for taxpayers that may not know whether they will be deemed to have a permanent establishment under the treaty until perhaps 6 months into the relevant 12-month period, and will therefore be subject to various taxes, including employment taxes, by the services country reaching back to the beginning of the relevant 12-month period.

Answer. It is correct that a permanent establishment arising under Article 5(8) of the proposed Bulgaria Convention is a permanent establishment for purposes of Article 14 of the Convention, and therefore the salaries, wages, and other remuneration of an employee borne by a permanent establishment of the employer arising under Article 5(8) of the treaty would be subject under Article 14 to being taxed

by the source country, even if the other requirements of the test in Article 14(2) had been met.

The Treasury Department recognizes that the rule for taxation of services in the proposed Canada Protocol raises compliance and administrative concerns for companies and their employees. The Treasury Department and Internal Revenue Service have met with a number of U.S. taxpayers, including professional services firms, to discuss the interpretation and application of this rule, focusing on administrative issues. The Treasury Department has discussed with Canada and, if the proposed Protocol is approved by the Senate, will continue to discuss with Canada, possible methods of easing the administrative burden on businesses associated with complying with this new rule, the effective date of which is delayed until the third taxable year ending after the proposed Protocol enters into force. The Technical Explanation to the proposed Canada Protocol, the contents of which the Government of Canada has subscribed to, provides that "[t]he competent authorities are encouraged to consider adopting rules to reduce the potential for excess withholding or estimated tax payments with respect to employee wages that may result from the application of [the services rule]."

Question. A version of this special rule appears in the 2008 OECD draft update to the OECD Model Tax Convention as an alternative services permanent establishment provision. There are, however, a few differences in language between the OECD rule and the one used in the Bulgaria Convention and the Canada Protocol. In particular, the OECD language clarifies that services performed by an individual on behalf of an enterprise may be considered as performed by that enterprise only if the enterprise supervises, directs, or controls the manner in which the services are performed by the individual. The language in the text of the Bulgaria Convention and the Canada Protocol are silent on this point, apparently leaving open the question of whether, and if so, under what circumstances, the use of a subcontractor might give rise to a permanent establishment of a general contractor. Is it Treasury's view that services performed by an individual on behalf of an enterprise may be considered as performed by that enterprise only if the enterprise supervises, directs, or controls the manner in which the services are performed by the individual? Does Canada share this view? Does Bulgaria?

Answer. For a number of years, the OECD has debated whether to include an alternative rule for the taxation of services in the OECD Model or its Commentary. The 2008 Update to the OECD Model, released on July 18, 2008, includes a version of the services rule as an alternative in the Model Commentary. The language of the OECD provision does not match in all respects the language of provision included in the proposed Bulgaria Convention and the Canada Protocol. For example, the language of the Bulgarian and Canadian provision requires that the services be provided "for customers who are either residents of that other State or who maintain a permanent establishment in that other State." That language regarding the provision of services to customers is not included in the OECD provision, and thus the issue of whether the use of a subcontractor might give rise to a permanent establishment is especially important in applying the OECD provision. If the Senate approves the proposed the Bulgaria Convention and Canada Protocol, the Treasury Department will continue to discuss with Bulgaria and Canada the interpretation and application of the version of the rule for taxation of services included in our agreements.

Question. One aspect of the rule in both the Bulgaria Convention and the Canada Protocol that would appear to be difficult to manage is the fact that the 12-month period isn't tied to a fiscal year. Is this something you considered and rejected during the course of negotiations? Is this something that might be considered in the future, should you include this special rule in future treaties?

Answer. The rule for taxation of services in the proposed agreements with Bulgaria and Canada refers to an aggregate of 183 days or more in "any 12-month period" as opposed to, for example, 183 days or more in a fiscal or calendar year. The reference to "any 12-month period" addresses potential situations in which, for example, work has been artificially divided into two separate fiscal years in order to avoid meeting the 183-day threshold. For instance, a taxpayer could circumvent a threshold based on 183 days in a fiscal year by providing services in the other state for the last five months of one fiscal year and the first five months of the following fiscal year.

The Treasury Department recognizes the administrative and compliance concerns of companies and their employees regarding the rule's reference to "any 12-month period." If the proposed agreements with Bulgaria and Canada are approved by the Senate, the Treasury Department will continue to discuss the interpretation and ap-

plication of this rule with Bulgaria and Canada in the context of exploring ways to alleviate administrative and compliance burdens.

The inclusion of a rule for taxation of services in the proposed agreements with Bulgaria and Canada does not reflect a change in U.S. tax treaty policy, and inclusion of such a provision in the U.S. Model is not being considered. However, it is a provision that the Treasury Department will consider in the context of negotiating a particular agreement in exchange for significant concessions in other areas, and the inclusion of such a provision in the proposed agreements with Bulgaria and Canada was a key element to achieving overall agreements that provide benefits to the United States and to U.S. taxpayers. At the same time, the Treasury Department recognizes the concerns raised by the Joint Committee on Taxation's "Explanation of Proposed Protocol to the Income Tax Treaty between the United States and Canada" about the appropriateness of including a services rule in a tax treaty with a developed country.

In the context of negotiating a particular agreement in the future, the Treasury Department may consider referring to an alternative 12-month period. The Treasury Department welcomes input concerning this issue.

Question. Mandatory arbitration was included in the Protocol with Canada, but not in the treaty with Iceland or Bulgaria. Please explain why. In negotiating future treaties, what are the factors considered by Treasury when deciding whether or not to include binding arbitration in a new tax treaty or in an amendment to an existing tax treaty? Are you currently negotiating mandatory arbitration mechanisms with other countries? If so, which countries?

Answer. The Treasury Department believes that mandatory binding arbitration, as an extension of the competent authority process, is an effective tool to strengthen the Mutual Agreement Procedure in the U.S. treaty network as a whole. Even in the best competent authority relationships, there are, on occasion, difficult treaty interpretation questions and disputes that arise. The Treasury Department believes that the arbitration mechanism included in the proposed agreement with Canada will help resolve cases in a timely manner and enhance the working relationship of the competent authorities.

The Treasury Department has been discussing mandatory binding arbitration in general terms with our treaty partners, and intends to continue to raise inclusion of a mandatory binding arbitration provision with our treaty partners in future negotiations. The Treasury Department welcomes further input from the committee concerning the factors that should be taken into account when considering whether to include an arbitration provision in the context of the negotiation of a particular agreement, as well as ways that the arbitration provision in future agreements might be improved or varied.

Question. When considering the mandatory arbitration provisions in the Belgium and Germany tax treaties, which were approved by the Senate last year, the committee focused on, among other things, the selection of fair, objective, and independent arbiters. In answer to a question for the record regarding your process for selecting arbiters, it was noted that the Treasury Department "expect[s] to have further discussions with our treaty partners concerning the [selection of arbiters], with a view toward achieving the best balance of the concerns expressed and providing to taxpayers an efficient and effective resolution of their double taxation." Please describe the status of such discussions with Belgium and Germany. Does the Department expect to have discussions with Canada on this topic as well? Specifically, what work has been done to ensure that the United States and all three treaty partners will select fair, objective, and independent arbiters for service on arbitration boards constituted by the mechanisms provided in these treaties?

Answer. The U.S. competent authority has formally begun discussions with Belgium and Germany on a number of procedural matters to ensure the effective implementation of the arbitration provision, including regarding the qualifications for arbiters, especially those qualifications required to ensure that arbiters are sufficiently independent. In those discussions, the U.S. competent authority has expressed the concerns raised by the committee in its considerations of the Belgian and German agreements regarding the selection of Government employees as arbiters. We hope that similar discussions with Canada begin soon. While we do not yet have formal agreements with any of these treaty partners, they understand and agree with the need for fair, objective, and independent arbitration boards.

Question. The Canada Protocol, as in the case of the Belgium and Germany tax treaties, does not identify the procedural rules that will be used by arbitration boards constituted in accordance with the mandatory arbitration provision included in each treaty. In answer to a question for the record on this topic in relation to

the Belgium and Germany tax treaties, the Treasury Department noted that "after studying the details of the [procedural] rules commonly used in commercial arbitration, we concluded that most of these rules relate to evidentiary procedures not relevant to the simplified arbitration format proposed in the agreements with Belgium and Germany, primarily because the decision of the arbitration board is to be based upon a record rather than a presentation of evidence." Has the Treasury Department had discussions with Canada, Belgium, and Germany regarding what procedural rules would be appropriate for the arbitration format provided for in these treaties? In particular, has there been any discussion regarding conflict of interest rules that might apply to arbiters?

Answer. The U.S. competent authority has formally begun discussions with Belgium and Germany, and informally with Canada, on a number of procedural matters to ensure the effective implementation of the arbitration provision. The objective of these discussions is to have the procedures in place with respect to Belgium and Germany no later than December 31, 2008. As part of the discussions with Belgium and Germany, the U.S. competent authority has also begun discussing the need for conflict-of-interest rules to govern arbiters. For example, the U.S. competent authority has discussed whether safeguards might be built into the necessary procurement arrangements between the United States and the arbiter. While the U.S. competent authority does not yet have formal agreements with any of these treaty partners, they understand and agree with the need for fair, objective, and independent arbitration boards.

Question. The committee Report on the Germany and Belgium treaties raised certain concerns regarding the mandatory arbitration mechanism, including concerns regarding treaty interpretation and the selection of arbiters. Other Members have indicated related concerns regarding these provisions. None of these are addressed in the Canada Protocol arbitration provision, but presumably that is because the Canada Protocol was already negotiated when these concerns were raised. Can you, however, confirm that these concerns will be considered and addressed in future tax treaties with similar arbitration mechanisms?

Answer. The arbitration provision in the proposed Protocol with Canada was already negotiated at the time the Senate considered the agreements with Germany and Belgium in 2007. It is for this reason that the concerns expressed by the committee on the agreements with Germany and Belgium are not reflected in the proposed Canada Protocol.

The Treasury Department greatly appreciates the input received from the committee on several aspects of the German and Belgian arbitration provisions, and similarly with the Canadian Protocol. The committee's concerns have been and will continue to be considered in any arbitration negotiations the Treasury Department conducts.

Question. The exchange of notes between the United States and Canada that accompanies the Canada Protocol includes many of the details that would govern the binding arbitration mechanism to be included in the treaty. Among other things, the notes make clear that the arbitration mechanism would only apply to certain articles in the treaty, which are listed, unless otherwise agreed to by the parties.

How were the articles to which arbitration applies, selected?

Answer. The Treasury Department believes that mandatory binding arbitration, as an extension of the competent authority process, is an effective tool to strengthen the Mutual Agreement Procedure in the U.S. treaty network as a whole. However, the scope of an arbitration provision in a particular agreement is a matter that must be negotiated with the treaty partner. Some countries may be willing to cover only specific articles in the treaty. It should be noted that while the mandatory binding arbitration provision in the proposed Canada Protocol is limited to certain articles, other issues are eligible for arbitration if the competent authorities agree that the particular case is suitable for arbitration.

Question. Why isn't Article 3 (Definitions) among the articles included in this list?

Answer. Article III of the existing Canada treaty provides definitions and general rules of interpretation for the treaty. Paragraph 1 of Article III defines a number of terms for purposes of the treaty. Certain other terms are defined in other articles of the treaty. Paragraph 2 of Article III provides that, in the case of a term not defined in the treaty, the domestic tax law of the Contracting State applying the treaty shall control, unless the context in which the term is used requires a definition independent of domestic tax law or the competent authorities reach agreement on a meaning.

To the extent that an issue concerning the definition of a term is part of a case regarding the application of one or more articles explicitly within the scope of the mandatory arbitration provision, such definitional issue will be considered during the arbitration process.

Question. If a dispute focuses on a term that is defined in Article 3 and appears in another Article that is within the scope of the arbitration mechanism, would such a dispute be subject to arbitration under the Protocol?

Answer. To the extent that an issue concerning the definition of a term defined in Article III is part of a case regarding the application of one or more articles explicitly within the scope of the mandatory arbitration provision, such definitional issue will be considered during the arbitration process

Question. Article 2(1) of the proposed Canada Protocol addresses the issue of so-called "dual-resident corporations." It provides that if such a company is created under the laws in force in a treaty country but not under the laws in force in the other treaty country, the company is deemed to be a resident only of the first treaty country. Have you considered whether this rule is equitable, for example, in circumstances in which a corporation was organized under the laws of the United States many years ago and has long since ceased to have significant contacts with the United States, but instead is managed and controlled in Canada? Have you considered whether it might be appropriate to provide discretion to the Competent Authorities in such a case to determine, for example, that the company is in fact a resident of Canada?

Answer. To address abuses of the existing treaty by U.S. companies continuing into Canada, the proposed Protocol replaces the existing treaty's rule for resolving dual-residency conflicts for corporations with an updated rule that is similar to the rule in the U.S. Model. It has been a longstanding treaty policy of the United States to place significant weight on the place of incorporation when addressing questions of dual corporate residence. However, we have included in other agreements, for example in our agreement with the United Kingdom and the proposed Bulgaria and Iceland agreements, provisions directing the Competent Authorities to endeavor to determine for treaty purposes the residence of dual resident corporations.

Question. Article 2(2) of the Canada Protocol would amend Article IV of the Canada Tax Treaty to include a new paragraph 6 and 7, setting forth specific rules for the treatment of certain income, profit, or gain derived through or paid by fiscally transparent entities. The new paragraph 6 would set forth a "positive" rule, which identifies scenarios in which "income, profit or gain shall be considered to be derived by a person who is a resident of a Contracting State." The new paragraph 7 would set forth a "negative" rule intended to prevent the use of such entities to claim the benefits where the investors are not subject to tax on the income in their state of residence. In particular, paragraph 7 is aimed largely at curtailing the use of certain legal entity structures that include hybrid fiscally transparent entities, which, when combined with the selective use of debt and equity, may facilitate the allowance of either 1) duplicated interest deductions in the United States and Canada, or 2) a single, internally generated, interest deduction in one country without offsetting interest income in the other country. As noted by the Joint Committee on Taxation in its explanation of the Canada Protocol, commentators have raised a question as to whether subparagraph 7(b) is too broad, because it could prevent legitimate business structures that are not engaging in potentially abusive transactions from taking advantage of benefits that would otherwise be available to them under the treaty. Please explain whether you agree or disagree with the assertion that subparagraph 7(b) is overbroad. If so, has there been any discussion regarding what might be done to improve the situation? In addition, does the Treasury Department expect to include such a rule in future tax treaties? If so, has the Treasury Department considered alternate versions that might provide for a narrower exception from the rule in paragraph 6?

Answer. Subparagraph 7(b) essentially denies benefits in cases in which the residence country treats a payment differently than the source country and other conditions are met. The rule is broader than an analogous rule in Treasury regulations issued pursuant to section 894 of the Internal Revenue Code. The Treasury Department is aware that the scope of subparagraph 7(b) is potentially overbroad, especially in the case of non-deductible payments. The Treasury Department has been discussing, and will continue to discuss with Canada, whether to address this issue. The Treasury Department does not contemplate incorporating such a rule in future tax treaties.

Question. The Treasury Department's Technical Explanation provides several examples of the application of subparagraph 7(b) to certain legal entity structures. But, the Technical Explanation does not provide an example of a payment made by a U.S. domestic reverse hybrid entity that is treated as a partnership for Canadian tax purposes to one of its owners. Although the partnership example in the Technical Explanation should apply reciprocally to a payment treated as a dividend for U.S. tax purposes and a partnership distribution for Canadian tax purposes, the Technical Explanation does not state so explicitly. Can you confirm that this is the case?

In addition, the Technical Explanation does not include examples relating to a deductible interest (or royalty) payment from a hybrid partnership entity to one of its owners. In the case of such a payment from a Canadian hybrid partnership entity, the U.S. recipient of the payment would generally treat it as a payment of interest (or royalties) for U.S. tax purposes.[1] One might expect that subparagraph 7(b) would not apply in this case because the fiscal transparency of the partnership would generally not be relevant for residence-country tax purposes, but there is no discussion of this case in the Technical Explanation. Can you confirm that this is a reasonable reading of subparagraph 7(b)? Also, please clarify whether subparagraph 7(b) applies with respect to deductible payments by a domestic reverse hybrid partnership entity to one of its Canadian owners.

Answer. Page 10 of the agreed Technical Explanation provides an example of the application of subparagraph 7(b):

> [Assume] in the above example, USCo (as well as other persons) are owners of CanCo, a Canadian entity that is considered under Canadian tax law to be a corporation that is resident in Canada but is considered under U.S. tax law to be a partnership (as opposed to being disregarded). Assume that USCo is considered under Canadian tax law to have received a dividend from CanCo. Such payment is viewed under Canadian tax law as a dividend, but under U.S. tax law is viewed as a partnership distribution. In such a case, Canada views USCo as receiving income (i.e., a dividend) from an entity that is a resident of Canada (CanCo), CanCo is viewed as fiscally transparent under the laws of the United States, the residence State, and by reason of CanCo being treated as a partnership under U.S. tax law, the treatment under U.S. tax law of the payment (as a partnership distribution) is not the same as the treatment would be if CanCo were not fiscally transparent under U.S. tax law (as a dividend). As a result, subparagraph 7(b) would apply to provide that such amount is not considered paid to or derived by the U.S. resident.

The provisions of subparagraph 7(b) apply reciprocally. Assume, for example, that CanCo (as well as other persons) are owners of USCo, a U.S entity that is considered under U.S. tax law to be a corporation resident in the United States, but is considered under Canadian tax law to be a partnership (a so-called "domestic reverse hybrid"). Assume that CanCo is considered under U.S. tax law to have received a dividend from USCo. Such payment is viewed under U.S. tax law as a dividend, but under Canadian tax law is viewed as a partnership distribution. In such a case, the United States views CanCo as receiving income (i.e., a dividend) from an entity that is a resident of the United States (USCo), USCo is viewed as fiscally transparent under the laws of Canada, the residence State, and by reason of USCo being treated as a partnership under Canadian tax law, the treatment under Canadian tax law of the payment (as a partnership distribution) is not the same as the treatment would be if USCo were not fiscally transparent under Canadian tax law (as a dividend). As a result, subparagraph 7(b) would apply to provide that such amount is not considered paid to or derived by the Canadian resident.

As noted in the agreed Technical Explanation: "Paragraphs 6 and 7 apply to determine whether an amount is considered to be derived by (or paid to) a person who is a resident of Canada or the United States. If, as a result of paragraph 7, a person is not considered to have derived or received an amount of income, profit or gain, that person shall not be entitled to the benefits of the Convention with respect to such amount. Additionally, for purposes of application of the Convention by the United States, the treatment of such payments under Code section 894(c) and the regulations thereunder would not be relevant." Thus, subparagraph 7(b) applies

[1] Under section 707(a) and Treas. Reg. section 1.707–1(a), if a partner engages in a transaction with a partnership other than in the capacity as a member of the partnership, the transaction is, in general, considered as occurring between the partnership and one who is not a partner. See Rev. Rul. 73–301, 1973–2 C.B. 215.

with respect to deductible payments by a domestic reverse hybrid to its Canadian owners.

Although not specifically addressed in the Technical Explanation, the Treasury Department and Canada agree that subparagraph 7(b) does not apply to deny benefits to interest and royalty payments by an entity that is treated as a partnership by one country and a corporation by the other if the treatment of such amount by the country of the person deriving the income would be the same if such amount had been derived directly by such person (interest or royalties).

Question. Does the Treasury Department intend to formally share its Technical Explanation regarding the Bulgaria and Iceland Treaties with each country, as a courtesy?

Answer. As a courtesy, the Treasury Department has sent copies of its Technical Explanation to each country. Unlike the Technical Explanation to the proposed Canada Protocol, however, the Technical Explanations to the proposed Bulgaria and Iceland Conventions have not been reviewed by or subscribed to by the relevant country.

RESPONSES TO ADDITIONAL QUESTIONS FOR THE RECORD SUBMITTED TO DEPUTY ASSISTANT SECRETARY MICHAEL MUNDACA BY SENATOR RICHARD G. LUGAR

Question. Please give an overview of current cases that have not been resolved and the anticipated case load that would be addressed by the Arbitration Provision in the Protocol with Canada, including number of cases, length of time unresolved, and country of origin breakdowns.

Answer. There are currently 192 active cases with Canada. Of those, approximately 90 percent are transfer-pricing cases, with the remainder involving interpretive issues, such as residency and permanent-establishment determinations. The Canadian tax authorities initiated the adjustment in 85 percent of the cases caused by a transfer pricing adjustment.

Fifty-three of the 192 total cases have been unresolved for over two years. Of those 53 cases, the "oldest" case is 2,289 days old and the "youngest" case is 762 days old. Four of the 53 cases involve interpretive issues, the oldest of which is 1,657 days and the youngest of which is 1085 days.

We should note that different countries track their outstanding competent authority cases differently. For example, concepts such as the definition of a case may vary by country. Thus, we have observed that where a treaty partner has aggregate information regarding its case load with the United States the numbers sometimes notably diverge from the numbers used by the United States.

Question. Traditionally, tax treaties agreements have been seen as facilitating cross-border trade and investment of multinational businesses. However, increasing globalization also affects small businesses. Is the current model for U.S. Tax Treaties clear, understandable and usable for smaller businesses? Give examples of how small business can take advantage of these treaties.

Answer. The current U.S. Model Tax Treaty and Technical Explanation are available on the Treasury Department website. The Treaty and especially the Technical Explanation are drafted to be as clear and understandable as possible, but we recognize that technical international tax rules and issues may appear opaque to many taxpayers. IRS publications, especially Publication 901 on Tax Treaties, provide international tax guidance in less technical terms and may be more accessible to individuals who do not have significant tax experience.

We further recognize that in our increasingly global economy, small businesses and individuals may, and perhaps must, address cross-border tax issues. Because our tax treaties provide generally uniform and clear rules regarding such important issues as withholding tax rates and tax jurisdictional thresholds, we think they can be especially useful to small businesses and individuals, who may not have access to multi-national advisors or foreign tax advice. More specifically, tax treaties generally allow U.S. businesses to engage in trade in goods and services of greater value and duration with foreign clients without incurring foreign taxes than would be the case in the absence of treaties. Treaties may also facilitate access to foreign skilled workers and researchers, and to foreign capital via reduced withholding rates.

We welcome further input from the committee regarding how best to serve small businesses in this regard.

Question. Please describe the current U.S. position on reciprocal elimination of withholding taxes on cross-border dividends paid between a subsidiary and its parent company. Has there been a change in the U.S. policy position?

Answer. The policy of the Treasury Department continues to be that the elimination of source-country taxation of dividends should be considered only on a case-by-case basis. Such a provision is not part of the U.S. Model because we do not believe that it is appropriate to include in every treaty. We must consider the interaction of our tax system with our treaty partner's, as well as the overall balance of the treaty before deciding whether inclusion is appropriate.

RESPONSES TO ADDITIONAL QUESTIONS FOR THE RECORD SUBMITTED TO SENIOR DEPUTY U.S. COORDINATOR RICHARD BEAIRD BY SENATOR JOSEPH R. BIDEN, JR.

Question. Please provide a list of recent accomplishments of the International Telecommunications Union ("ITU") that have had a significant impact on U.S. interests, with a particular focus on national security, public diplomacy, and economic interests.

Answer. In terms of National Security, the ITU has been a leader in the development of Standards for Emergency Telecommunications (and related standards for Telecommunications for Disaster Relief). This is important because emerging telecommunications networks are based on fundamentally different switching technologies from the legacy Public Switched Telecommunications Networks.

In terms of public diplomacy, the ITU Development (D) Sector has made one of its primary goals developing a "cybersecurity best practices" report for use by the developing world. The U.S. has a leadership role in this effort. The draft report on cybersecurity best practices has been well received by developing nations, and already constitutes a success story at the ITU for both the U.S. (which developed the basic materials), and the institution.

In terms of economic interest, the 2007 World Radiocommunication Conference (WRC-07) addressed some 30 agenda items related to almost all terrestrial and space radio services and applications. These included future generations of mobile telephony, aeronautical telemetry and telecommand systems, satellite services including meteorological applications, maritime distress and safety signals, digital broadcasting, and the use of radio in the prediction and detection of natural disasters.

Question. Please provide a list of current and future priorities of the ITU that are of importance to the United States.

Answer. The United States supports the ITU's approach of focusing on the theme of convergence in providing a range of services over a single network. As legacy telecommunication systems transition to Internet Protocol-based platforms that support expanded information and communication technologies (ICTs), the U.S. believes it is necessary to examine the potential of ICTs to address significant global issues. One such issue is ICT and its effect on the environment.

The U.S. also supports the ITU's efforts to coordinate the needs of developing and developed countries to expand Digital Inclusion. The ITU is also urging Regional Groups to fully collaborate to identify the necessary spectrum for International Mobile Telecommunications (IMT), which will allow use of advanced broadband mobile technology on a global basis. In October 2007, at the World Radiocommunication Assembly, the ITU added a WiMAX-derived technology to the IMT-2000 set of global standards. This paves the way for the world-wide deployment of voice, data and multimedia services to stationary and mobile devices, at higher speeds and across wider areas.

Question. Many of the amendments made to the ITU Constitution and the ITU Convention that are now under consideration (Treaty Docs. 108–5, 109–11, and 110–16), are designed to facilitate private sector participation in the work of the ITU.

Please describe how the increased private sector participation has changed the dynamic at the ITU.

Answer. There are a number of trends in ITU participation since the year 2000 that have changed the landscape in the ITU. Since 2000, the private sector has shown increased interest in participating in ITU activities (as ITU Sector Members) and in partnering with the ITU in order to interface with relevant governmental decision-makers (and other potential partners) that are involved in addressing the constantly changing and evolving telecommunication environment. The increased participation of ITU Sector Members has assisted the ITU in developing innovative agendas to encourage access to Information and Communication Technologies (ICTs) in developing countries. It has also provided Sector Members with new business opportunities.

Question. Does more need to be done to facilitate private sector participation?

Answer. We continue to look for ways to make the ITU a more attractive forum for private sector participation. At the last Plenipotentiary Conference in Antalya, the U.S. was successful in keeping the Conference from increasing the minimum contribution for Sector Members. We believe that maintenance of the current levels of contribution will encourage private sector participation in the ITU. We are encouraged that major corporations have recently broadened their participation in the ITU.

Question. At what point does private sector participation become concerning? What are the challenges that the ITU faces in balancing Member States' rights with the involvement of the private sector?

Answer. Private sector participation in the ITU's activities is crucial to the future success of the ITU. More participation per se by the private sector is never a threat. However, if changes were made in the ITU's procedural rules that resulted in Sector Members gaining control over the ITU's processes, such changes would be a concern because they could prevent Member States from exercising their appropriate role as guardians of the public interest and national security. No such changes are currently envisioned.

Question. One of the most important aspects of the 1998 amendments to the Constitution and the Convention was a clarification of the roles of Member States of the ITU and private sector participants in the ITU, which include "Sector Members" and "Associates."

Answer. Please provide information on the role and importance of Sector Members within the ITU.

Answer. Sector Members have an important role to play in all three ITU Sectors, but their participation relative to that of Member States varies from Sector to Sector. In the ITU-T, since national networks have been privatized, Member States generally no longer engage in technical work (with some exceptions where there are national interests at stake, such as priority of communications in times of national disasters and emergencies, or identity management). Consequently, Sector Members are largely responsible for preparing technical contributions for telecommunications standards. In the ITU-R, both Sector Members and Member States have major stakes in obtaining and protecting radio spectrum. In the ITU-D, with some notable exceptions, the private sector has historically been much less involved. This may be because the business case for assisting developing countries is much less obvious than the need to obtain spectrum for a new service (in ITU-R), or to establish an international standard for telecommunications equipment (in ITU-T).

Question. Why did the United States decide not to authorize the direct application procedures that were added to Article 19 of the Convention in an effort to streamline the application process for Sector Members?

Answer. The U.S. has chosen to maintain minimal oversight over which U.S. entities are allowed to apply for ITU membership for a number of reasons. One is that the U.S., which has more Sector Members than any other country, wants to be kept informed about what U.S. entities are participating in the ITU. Another is that the U.S. may incur some de facto responsibilities as a result of a U.S. company becoming an ITU member. For example, the ITU turns to the U.S. to assist in seeking payment from a U.S. entity when that U.S. entity does not meet its ITU obligations, such as failure to pay its contributory share.

Question. Please provide information on the role and importance of Associates, including their role in ITU study groups.

Answer. Associates are entitled to attend and participate in a specific Study Group or Groups, whereas Sector Members are entitled to attend and participate in all the Study Groups in a given Sector. Associates play an important role in the ITU standards development process. Creation of an Associate category has increased private sector participation in the ITU and brought into the ITU process entities with specialized expertise in particular fields of telecommunications. The private sector has benefited from the Associate category because it has allowed entities that have expertise in a particular telecommunications subject to participate in that part of the work of the ITU that is of interest to them, at a lower rate than they would have to pay to as Sector Members.

Question. Is there any overlap between Sector Members and Associates?

Answer. Sector Membership entitles a private sector member to attend all the Study Groups in a Sector. An Associate can only participate in the specific Study Group(s) for which it is an Associate. If an entity is a Sector Member, it would make no sense for it also to be an Associate in the same sector.

We are aware that several entities have chosen to be a Sector Member in one Sector but an Associate in another Sector.

Question. How many U.S. Sector Members and U.S. Associates participate in the ITU's work? Is there a list that is publicly available?

Answer. Yes.

There is a publicly available list of Sector Members on the ITU's website at—

www.itu.int/cgi-bin/htsh/mm/scripts/mm.list?_search=sec&_languageid=1

And Associates at—

www.itu.int/cgi-bin/htsh/mm/scripts/mm.list?_search=associates&_languageid=1

There are currently 568 Sector Members and 153 Associate Members listed, in addition to 191 Member States.

Question. The 1998 amendments to Article 28 of the Constitution provide that the Secretary General should notify the Member States of the provisional values of contributory units before the beginning of the Plenipotentiary Conference and that Member States, in turn, should determine their final choice of contributory unit, their allocation level, before the end of the Conference. The United States unsuccessfully opposed the change in the time allowed for Member States to notify the Secretary General of their final allocation level, arguing that it needed more time for Congressional input. Has this change in the time-line for contributions created any problems for the United States?

Answer. The time-line has not created any problems for the U.S.

Question. There has been considerable discussion relating to the role that the ITU should play in governing the Internet. The Report of the U. S. Delegation to the Plenipotentiary Conference of the International Telecommunications Union in Marrakesh (2002) stated that "while Member States have become significantly more interested in the issues related to Internet governance, the U.S. successfully worked to ensure that three ITU resolutions concerning management of the Internet reaffirmed private sector leadership in this area and limited the ITU involvement to its core competencies." See pg. 2. The Report of the United States Delegation to the Plenipotentiary Conference of the International Telecommunication Union in Antalya, Turkey (2006) indicated that the role of the ITU in internet governance was discussed and was affirmed insofar as it related to cyber security, consistent with the existing mandate of the ITU. See pg. 16.

What is the role that the ITU currently plays in Internet governance? Which ITU bodies are most involved in this work?

Answer. The Administration believes that the term "Internet governance" covers a wide range of public policy-related issues and serves as a "catch-all" for a multitude of topics related to the Internet including spam, e-commerce, e-literacy, universal connectivity, management of the domain name and addressing system (DNS), etc. Given the breadth of topics potentially encompassed under the rubric of "Internet governance," the Administration believes that no single venue can appropriately address the subject in its entirety. As a general matter and consistent with its mandate, the ITU has a role with respect to the telecommunications infrastructure over which the Internet operates. All three ITU Sectors (ITU-D, ITU-R, and ITU-T) are involved in this work.

While the Administration recognizes that the current private-sector led system for management of the Internet is working, we continue to encourage an ongoing dialogue with all stakeholders around the world in the various entities (including the ITU) that are involved in various aspects of the Internet (pursuant to their expertise, core competencies, and governing agreements), as a way to facilitate discussion and to advance our shared interest in the ongoing robustness and dynamism of the Internet.

Question. Going forward, what role should the ITU play in Internet governance? Have public statements been made, which reflect the Administration's position on this question? If so, where?

Answer. The advancement and proliferation of the Internet is dependent upon the continued interworking of the underlying telecommunication infrastructure that the ITU has historically addressed. The Administration supports continuation of this work, as well as the ITU's technical involvement in Internet Protocol-based networks through its membership-driven study group process on issues such as spam, cybersecurity, etc., to the extent such work is consistent with the historical core competencies of the ITU. We do not support an expanded scope for the ITU into other issues related to "Internet governance" and we have strived to ensure that ITU work programs are not duplicative of work ongoing in other international and intergovernmental institutions. This view is routinely conveyed in written contributions to ITU as well as speeches and testimony of senior Administration officials.

Question. The Report of the United States Delegation to the Plenipotentiary Conference of the International Telecommunication Union in Antalya, Turkey (2006) indicated that "the ITU Council should establish a working group to consider the range of issues associated with the participation of all relevant stakeholders in the

activities of the Union related to [World Summit on the Information Society]." See pg. 16. The World Summit on the Information Society (WSIS) is focused on ensuring that the benefits of the Internet are accessible to everyone. Did the ITU Council establish a working group, as envisioned in the 2006 Report? If so, what were the recommendations of this group?

Answer. On November 24, 2006 at an extraordinary session, the ITU Council created the Council Working Group on the Study on the Participation of All Relevant Stakeholders in ITU Activities Related to the WSIS (WG-WSIS), as called for in Resolution 141of the Plenipotentiary Conference in Antalya, Turkey. The group, which will present a final report to the 2009 session of Council, has met four times thus far and is scheduled to meet again September 29–30, 2008 in Geneva. The upcoming meeting will review the results of questionnaires developed by the Working Group to seek input of ITU Member States as well as entities that were accredited to the WSIS regarding the effectiveness of existing mechanisms for participation in the ITU.

Question. Please explain to what extent the Executive Branch regards the ITU instruments under consideration to be self-executing.

Answer. The ITU instruments under consideration are not of their own force intended to be judicially enforceable. Implementation by the United States is authorized by the Communications Act of 1934, 47 U.S.C. § 151, et seq., as amended, and by the National Telecommunications and Information Administration Organization Act, 47 U.S.C. § 901 et seq., as amended. No new U.S. legislation is needed to implement these amendments.

Question. The 1998 amendments to the Constitution increased the number of members of the Radio Regulations Board (RRB) from nine to not more than 12 or a number corresponding to six percent of the total number of Member States, whichever is greater. See Article 14 of the Constitution. Article 9 of the Constitution of the ITU provides that each Member State may propose only one candidate to the RRB. What is the current make-up of the RRB? How does this amendment to Article 14 affect, if at all, the United States' chance of having its candidate elected to the RRB?

Answer. The RRB is currently comprised of representatives from twelve countries. They are the USA (Chair for 2008), Cameroon, Canada, France, India, Kyrgyzstan, Lithuania, Malaysia, Morocco, Nigeria, Pakistan and Poland. The RRB members perform their duties independently and on a part-time basis, normally meeting up to four times a year in Geneva, and are elected at the Plenipotentiary Conference. The twelve candidates receiving the most votes at the Plenipotentiary Conference are elected to the RRB. Under such rules, the chances of a country having its candidate elected are increased as the size of the Board increases.

Question. The 2006 amendments to the Convention included the deletion of a provision in the Convention that gave the representative of each Member State of the Council the right to attend, as an observer, all meetings of the ITU Sectors. See Article 4(7) of the Convention (SUP 58). Moreover, the Convention was amended to clarify that Sector Members may attend (and not merely be represented at) meetings of the Council, its committees, and its working groups, subject to certain conditions. See Article 4(9ter). Please explain why each of these amendments were made and whether the United States supported these amendments.

Answer. A practical difficulty preceding the 2006 amendments was the status of observer Member States attending ITU Council meetings. The specific issue was whether such observer Member States could participate at committees and working groups of Council. This issue consumed significant energy, particularly in that vocal observer Member States sought entrance to committee meetings and working groups of the Council that some Member States already represented on the Council thought were not authorized. The United States' view was that, subject to the rules in force, all participants at Council meetings and working groups should be afforded the opportunity to make their views known. In the view of the United States, affording participants at lower level meetings the opportunity to generally voice their views is the best method of achieving a consensus on the eventual outcomes. Accordingly the U.S. supported the amendments in question.

RESPONSES TO ADDITIONAL QUESTIONS FOR THE RECORD SUBMITTED TO SENIOR DEPUTY U.S. COORDINATOR RICHARD BEAIRD BY SENATOR RICHARD LUGAR

Questions Relating to Treaty Docs. 108–5, 109–11, and 110–16 Generally

Question. What is the current status of the amendments to the ITU Constitution and Convention contained in these documents?

In the case of each set of amendments, how many ITU Member States have ratified or acceded to the amendments, and how many have not done so?

Answer. All of the amendments are in force for those ITU Member States that have deposited their instrument of ratification, acceptance or approval of the amendments with the ITU.

Treaty Doc Number	Total ITU Member States	Member States that have ratified, acceded or approved	Member States that have not ratified, acceded or approved
108–5	189	81	108
109–11	189	63	126
110–16	191	8	183

Question. To the extent that the amendments have entered into force for some ITU Member States, and not for others, what rules govern when an issue addressed by the amendments arises?

Answer. As the ITU Constitution and Convention and their amending instruments are silent on this question, customary rules of international law govern the ITU legal relations between ITU Member States that are parties to such amendments and those that are not. Pursuant to those customary rules, as between any two such Member States, only the amendments to the ITU Constitution and Convention to which both states are parties apply to their mutual relations. For the United States, this is the ITU Constitution and Convention, as amended in 1992 and 1994.

Question. Is the United States currently enjoying rights provided for in these amendments even though it has not yet ratified them? If so, please indicate what rights the United States is enjoying and on what legal basis it is enjoying them?

Answer. In general terms, we believe that the various amendments to the Constitution and Convention, many of which have been voluntarily implemented by Member States that have not yet ratified them, have improved the management, functioning and finances of the ITU so as to make the ITU a more transparent, nimble and accountable organization that better serves the interests of its Member States, including the United States.

Question. Is the United States currently complying with obligations of ITU Member States provided for in these amendments even though it has not yet ratified them? If so, please indicate what such obligations the United States is currently complying with and on what legal basis it is doing so?

Answer. As indicated in the public testimony and in our response to General Question 1c above, many of the amendments to the ITU Constitution and Convention that are pending for Senate advice and consent to ratification concern the management, functioning and finances of the ITU. The United States has voluntarily supported implementation of these amendments, even though it has not yet ratified them. For example, in 1998 and 2006, the ITU Plenipotentiary Conferences adopted amendments to the ITU Constitution to require Member States to announce their class of contribution by particular deadlines so that the ITU could develop a realistic budget. The United States has voluntarily sought to adhere to those deadlines in order to improve the management and finances of the ITU, even though it is not yet required to do so.

Question. Are U.S. private sector entities currently able to enjoy rights with respect to participation in the ITU provided for in these amendments even though the United States has not ratified them? If so, please indicate on what legal basis such entities are able to enjoy such rights?

Answer. We believe that the U.S. private sector has gained significant benefits from these amendments, in terms of its participation in the ITU. The 1998 ITU

Plenipotentiary Conference adopted amendments to enhance the status of ITU Sector Members, including recognition that Sector Members may provide chairs and vice chairs at sector assemblies and meetings and at World Telecommunication Development Conferences and establishing a new category of ITU Associate that can participate in the work of a particular ITU Study Group. The 2002 and 2006 ITU Plenipotentiary Conference adopted amendments to allow private ITU Sector Members may attend meetings of the ITU Council, its committees and working groups under certain conditions. All of these amendments have enhanced the ability of the private sector to participate in the work of the ITU. The legal basis for that participation is the various ITU amendments that have entered into force, even though the United States has not yet ratified those amendments. Thus, U.S. private sector entities are able to enjoy these benefits even though the U.S. has not yet ratified the amendments.

Question. Does the Administration believe it is sound policy for the ITU to amend its governing rules every four years? What impact does this practice have on the stability of the ITU's activities and the legal certainty of the rules governing them?

Answer. The ITU reviews its governing rules every four years. The governing rules are changed only when necessary, on the basis of consensus. This practice provides for a flexible organization with the ability to adapt to emergent technologies and yet offers stability to the multiplicity of ITU Member States and ITU Sector Members. While various amendments are made to the ITU Constitution and Convention as part of this process, those amendments do not fundamentally change the basic structure of the ITU. Hence, the technical changes to the ITU governing rules do not disrupt the stability of the ITU's activities and the legal certainty of the rules governing those activities.

Question. The United States made a number of declarations and reservations to the instruments contained in these documents at the time it signed the Final Acts of the relevant Plenipotentiary Conferences, and is seeking advice and consent to those declarations and reservations. Please indicate whether and when the Executive Branch consulted with the Senate prior to making these declarations and reservations?

Answer. While the Executive Branch did not formally consult with the Senate prior to making these declarations and reservations, the Executive Branch sought in its declarations and reservations to preserve the prerogatives of the Senate in providing advice and consent to ratification of these instruments amending the Constitution and Convention. In particular, the Executive Branch made clear in each case that it reserved the right of the United States to make additional declarations and reservations to each instrument at the time of deposit of its instrument of ratification of the amendments with the ITU, so as to preserve the right of the Senate to provide additional declarations and reservations at the time of advice and consent to ratification. Also, because certain provisions of the 1992/1994 ITU Constitution provide for implied consent to be bound by revisions of the Administrative (Radio) Regulations adopted either before or after amendments to the ITU Constitution and Convention have been adopted, the Executive Branch has also included specific declarations in each instance specifying that the United States has not consented to be bound by those revisions without specific notification to the ITU of the United States' consent to be bound. These declarations and reservations will be found at Treaty Doc. 110–16, at X–XI; Treaty Doc. 109–11, at 8–9; and Treaty Doc. 108–5, at X. Further, the declarations and reservations in these instruments are consistent with those made in earlier instruments to which the Senate has previously given its advice and consent. See Treaty Doc. 104–34, at IX.

Questions Relating to Treaty Doc. 108–5

Question. The transmittal package for Treaty Doc. 108–5 describes amendments relating to the Rules of Procedure of Conferences and Meetings of the ITU as follows:

> The 1998 Conference adopted amendments to the Convention that removed the Rules of Procedure of Conferences and Meetings of the ITU, with the exception of provisions relating to reservations and the right to vote, from the Convention and transferred them to a separate legal instrument. (See Convention, Article 32B, SUP 341–467.) This separate legal instrument entered into force on January 1, 2000, for those Member States that, as of that date, had submitted their instrument of ratification, acceptance, approval or accession to the 1998 Amendments. It will enter into force for all other Member States, including the United States, on the date on which they deposit their instruments of ratification, acceptance, approval or accession to the 1998 Amendments. Unless

otherwise agreed to by a plenipotentiary conference, amendments to this separate legal instrument shall enter into force on the date of signature of the Final Acts of the plenipotentiary conference at which they are adopted. (See Rules of Procedure of Conferences and Other Meetings of the International Telecommunication Union, 25.)

What was the source of the Rules of Procedure that governed the United States participation in the 2002 and 2006 ITU Plenipotentiary Conferences?

Answer. Prior to 1998, the Rules of Procedure for ITU Conferences and other meetings were contained in Article 32 (## 340406, 410–444, 447–467) of the 1992/1994 ITU Convention, which entered into force for the United States on October 26, 1997. As noted above above, the relations of an ITU member state that has not ratified, acceded or approved later amendments (such as the United States) with an ITU member state that has ratified, acceded or approved the later amendments is governed by the earlier version of the ITU Constitution and Convention to which both ITU Member States are parties, without the amendments. Hence, for the United States, the Rules of Procedure found in the 1992/1994 version of the ITU Convention governed United States participation at the 2002 and 2006 ITU Plenipotentiary Conferences.

Question. Was the source of these rules different than that of the Rules of Procedure that governed the participation of ITU Member States that ratified the 1998 Amendments prior to January 1, 2000?

Answer. Yes. The ITU Rules of Procedure are now found in a separate legal instrument entitled "General Rules of Conferences, Assemblies and Meetings of the Union." Since these rules, however, originated in Article 32 of the 1992/1994 ITU Convention and were extracted from the 1992/1994 Convention to form the separate legal instrument, the substance of the rules, in large part, is the same as that found in Article 32 of the 1992/1994 ITU Convention.

Question. To date, have any changes been made to the Rules of Procedure contained in the "separate legal instrument" provided for in these amendments?

Answer. Yes, minor amendments.

Question. If so, is United States participation in ITU meetings currently governed by such changes even though it has not yet ratified the amendments providing for the "separate legal instrument"?

Answer. No.

Question. If so, what is the legal basis for the application of such changes to the United States?

Answer. See answers above.

Question. To the extent that different Rules of Procedure have applied to different ITU Member States at ITU meetings subsequent to the entry into force for some states of these amendments, how were matters addressed in the case of conflicts between the varying sets of rules?

Answer. To our knowledge, no such conflicts have arisen. If they did, they should be resolved as indicated in General Question 1b above and Question 1a immediately above.

Question. Amendments to Article 20 of the ITU Convention provide for the establishment of Business Study Groups which may adopt certain questions and recommendations without the formal consultation of ITU Member States.

Please provide a list of topics on which Business Study Groups have adopted questions or recommendations without formal consultation with ITU Member States.

Answer. Article 20 of the Convention provides for the "Conduct of Business of Study Groups." Pursuant to Article 20 (in particular, paragraph CV 246–A and 246–D), Member States have established procedures for both study Questions and Recommendations to be adopted without formal consultation of the Member States where there is no doubt that the Questions and Recommendations involved lack policy or regulatory implications. In the ITU Telecommunication Standardization Sector, Questions may be adopted at Study Group meetings where there is consensus (see WTSA Resolution 1, Section 7.2.2). Recommendations may also be adopted without formal Member State consultation pursuant to the streamlined process set forth in ITU-T Recommendation A.8.

Twenty-two Questions were adopted during the 2004–2008 period without formal Member State consultation.

In the ITU Telecommunication Standardization Sector, most Recommendations are highly technical and do not involve regulatory or policy issues, and are therefore

approved under the streamlined process, i.e., by the Member States and Sector Members present at the Study Group meeting without further formal consultation of all Member States. In the period from 2004–2008, there were 840 ITU-T Recommendations approved using this process; a list of these can be provided if requested. It is estimated that this constitutes over 90% of the ITU-T's recommendations during this period. However, even in these cases, Member States may call for a formal Member State consultation process where they believe policy or regulatory issues are involved.

Question. Please indicate whether there have been any disputes within the ITU over whether particular questions or recommendations required formal consultation with ITU Member States under these amendments and how any such disputes were resolved.

Answer. The process adopted by Member States for approval of Questions without formal Member State consultation is set forth in WTSA Resolution 1 at Section 7.2. It permits study groups to approve Questions if there is consensus of those present (including Member States) at the meeting (Section 7.2.2). However, if there is no consensus, a formal Member State consultation process may be initiated (Section 7.2.3). It has never been necessary to apply this formal consultation process.

From time to time the issue of whether a given Recommendation should be approved according to the streamlined approval process or by formal consultation with Member States has arisen. If there is no consensus at the study group meeting at which the issue arises, ITU-T Recommendation A.8, Section 8.1.1 calls for Member States present to decide the issue by majority vote, but it has never been necessary to apply this voting procedure.

Question. The transmittal package for Treaty Doc. 108–5 (1998 Plenipotentiary Conference) indicates that the United States unsuccessfully sought an amendment to Article 33 of the ITU Convention that would have eliminated the requirement that interest be paid on arrears to the ITU.

Is the United States currently in arrears to the ITU?

Answer. The U.S. has paid all the assessed contributions except for the 2008 assessment of Swiss francs (CHF) 9,540,000 ($9,376,321). Because of a funding shortfall in the Contributions to International Organizations (CIO) account, U.S. payments to ITU, along with eight other organizations, became partially deferred in FY 2006. The assessed contribution to ITU for calendar year 2008 will be paid from two different fiscal years: thirty percent from FY08 funds and seventy percent from FY09 funds.

Question. Has the United States been in arrears to the ITU at any point in the past? Please indicate the amounts and dates of any such arrears.

Answer. Yes, the 1997 assessment for ITU was short by CHF 1,419,594. ($1,394,932)

Question. Has the ITU sought to invoke Article 33 to collect interest payments from the United States? If so, please indicate the amounts and dates of any such efforts.

Answer. Yes, per article 33 outstanding amounts bear interest from the beginning of the fourth month of the financial year (April 1) at 3% then at 6% from the beginning of the seventh month (July 1.) As a result, the U.S. has been invoiced as follows:

1996 CHF	155,158 ($152,480)	interest on arrears
1997 CHF	1,483,476 ($1,457,585)	shortfall on 1997 assessment and interest on arrears
1998 CHF	88,050 ($86,538)	interest on arrears
1999 CHF	92,971 ($91,394)	interest on arrears
2000 CHF	98,475 ($96,808)	interest on arrears
2001 CHF	104,301 ($102,536)	interest on arrears
2002 CHF	100,202 ($98,507)	interest on arrears
2003 CHF	37,587 ($36,948)	interest on arrears
2004 CHF	310,672 ($305,328)	interest on arrears
2005 CHF	173,293 ($170,299)	interest on arrears
2006 CHF	456,286 ($448,403)	interest on arrears
2007 CHF	321,180 ($315,601)	interest on arrears

The current balance for interest on arrears as of January 2008 is CHF 1,369,380 ($1,345,728).

Question. Has the United States made any payments of interest on arrears to the ITU? If so, please indicate the dates and amounts of any such interest payments.

Answer. Yes, CHF 602,837 ($592,402) on November 14, 2002 to partially pay the accumulated interest on arrears owed.

Question. The transmittal package for Treaty Doc. 108–5 states that "for domestic policy reasons" the United States will require U.S. private Sector Members to continue to apply for ITU Sector Membership using procedures requiring the direct involvement of the U.S. Government, rather than through alternative procedures providing for direct applications through the ITU.

Please explain the domestic policy reasons for this decision.

Answer. The U.S. has chosen to maintain minimal oversight over which U.S. entities are allowed to apply for ITU membership for a number of reasons. One is that the U.S., which has more Sector Members than any other country, wants to be kept informed about what U.S. entities are participating in the ITU. Another is that the U.S. may incur some *de facto* responsibilities as a result of a U.S. company becoming an ITU member. For example, the ITU turns to the U.S. to assist in seeking payment from a U.S. entity when that U.S. entity does not meet its ITU obligations, such as failure to pay its contributory share.

Please give an assessment of how the direct application procedures have worked in practice for those states that have utilized them, and of the impact on the work of the ITU of the participation of Sector Members admitted through such procedures.

Answer. Although other Member States do not disclose the benefits of their direct application procedures, for the U.S., the application process has worked very well. The endorsement process is not complicated for either the U.S. or for the ITU. This is evident in the large number of public and private companies that have joined the ITU (568 Sector Members, of which 86 are from the U.S., and 153 Associate members).

Questions Related to Treaty Doc. 109–11

Question. Please indicate how much money the ITU is expected to save on an annual basis as a result of the amendments to Article 4 of the Convention with regard to the payment of travel expenses of Member State representatives in connection with meetings of the ITU Council. Please also indicate how much money the ITU currently spends on such expenses on an annual basis.

Answer. Using today's conversion rate of U.S. Dollar to Swiss Franc (CHF) ($1 US = .97 CHF), the expected savings on travel expenses for the sixteen ITU Member States that are developed countries (at an average cost of $3,931) equals $62,896 per ITU council meeting. The ITU Council meets annually. Hence, the expected savings on daily subsistence allowance expenses for the sixteen ITU Member States that are developed countries (at $491/day over an average of 10 days), equals $78,560 per Council session. This results in a total savings of $141,456.

The ITU's annual travel expenditures between 2002 and 2007 amount to approximately $2.2 million ($ 3.3 million including fellowships).

Questions Related to Treaty Doc. 110–16

Question. As described in the transmittal package, amendments to Article 5 of the ITU Convention contained in 110–16 provide for the ITU Secretary General and other specified ITU officials to participate in ITU meetings "in an advisory, vice consultative, capacity." Please explain the distinction between these two capacities and the significance of this change.

Question. The distinction between the two terms relates to the core role that is desired of the Secretary General in the ITU. Each sector of the ITU (ITU-R, ITU-T and ITU-D) has an advisory group whose output is available for consideration by the Member States. Prior to the Antalya Plenipotentiary Conference, the term "consultative," as applied to the Secretary-General's participation, was deemed to give the Secretary General too strong a role in the conduct of what is fundamentally an inter-governmental organization. The ITU Member States did not regard the Secretary-General as properly being on a par with the Member States. Accordingly, the Antalya Plenipotentiary Conference made clear that the Secretary-General and other ITU officials provide advice to the Member States but Member States need not consult them.

Questions Related to Treaty Docs. 107–17 and 108–28

Question. The revisions to the ITU radio regulations contained in Treaty Docs. 107–17 and 108–28 were concluded in 1992 and 1995, respectively.

Is the United States already implementing or acting in accordance with these revisions? If so, please indicate the authorities on which the Executive Branch has relied in order to do so.

Answer. In the exercise of their statutory and regulatory authority, the Federal Communications Commission (FCC) and the National Telecommunications and Information Administration (NTIA) have generally been able to implement revisions to the Radio Regulations through notice and comment rulemaking under the Administrative Procedure Act (APA). Both the FCC and NTIA have broad authority over their respective spheres of telecommunication regulation, the FCC for non-governmental telecommunications and the NTIA for governmental telecommunications. The FCC's basic authority is found in 47 U.S.C. §§ 152(a), 301 and 303. The NTIA exercises delegated Presidential authority over all governmental telecommunications found in 47 U.S.C. 305 under Reorganization Plan No. 1 of 1977 and E.O.12046, as set forth in 47 U.S.C. 902(b). 47 U.S.C. 303(r) specifically authorizes the FCC to make rules and regulations, not inconsistent with law, necessary to carry out the provisions of any international radio or wire communications treaty or convention to which the United States is or may hereafter become a party. 47 U.S.C. 902(b)(2)(A) & (K) authorize the NTIA to assign frequencies and establish policies concerning spectrum use by radio stations belonging to the U.S. Pursuant to this law, NTIA implements amendments to the ITU instruments regarding telecommunications spectrum for governmental stations.

Question. Given the significant changes in telecommunications sector in the intervening period since the adoption of these revisions, please explain why these revisions remain relevant and why the Administration considers their ratification to be important.

Answer. We are making an earnest effort to bring the United States up-do-date with all ITU instruments because we believe, among other things, that this would continue to support the United States' strong presence in the ITU, which hopefully will assist in furthering the USG's telecommunications goals within that organization. It is important that the United States not be seen as picking and choosing ITU Final Acts to ratify since it would send a signal internationally that the U.S. has moved away from its historical practice of managing international telecom and spectrum policy. Further, these earlier revisions provide the foundation for more recent amendments to the radio regulations, and thus it is important for the United States to ratify them in a comprehensive fashion.

RESPONSES TO ADDITIONAL QUESTIONS FOR THE RECORD SUBMITTED TO DEPUTY ASSISTANT SECRETARY DAVID A. BALTON BY SENATOR JOSEPH R. BIDEN, JR.

Question. How will joining these three environmental treaties (The Anti-Fouling Convention, the London Dumping Protocol, and the Land-Based Sources Protocol) benefit the United States? Why should the Senate act on them now?

Answer. Prompt action to facilitate ratification of these treaties will allow the United States to reinforce and maintain its leadership role on oceans issues at the international and regional levels. Ratification would enhance our ability to work with other States to promote effective implementation of these treaties. As a Party to these treaties, the United States would be able to participate fully in meetings of States Parties and, thereby, more directly affect the implementation and interpretation of these treaties. Further, after the United States ratifies a treaty, other nations are more likely to ratify as well, resulting in greater overall protection of the oceans from marine pollution.

With respect to the Anti-Fouling Systems Convention, the United States has an obvious interest in protecting its marine environment and ecosystems from the harmful effects of anti-fouling systems, particularly hazardous leaching of organotin in our ports and other waters. U.S. ratification and enactment of the proposed implementing legislation will together require foreign vessels entering U.S. ports and certain other waters to stop using harmful anti-foulants containing organotins. Since the United States already has significant existing prohibitions against organotin use, this will help create a "level playing field" on this issue. Ratification would also allow the United States to participate in decisions on inclusion of other harmful anti-fouling systems in the future.

The Caribbean region covered by the Land-Based Sources Protocol is of crucial importance, as pollution of these waters directly affects the United States. For this

reason, the United States strongly advocated the development of the Land-Based Sources Protocol. Ratification by the United States is likely to spur other governments in the region to also become Party. This would lead to an overall improvement of the marine environment in this neighboring region, resulting in improved protection of human health and marine resources, as well as a stronger regional economy and tourism industry.

The London Protocol is increasingly replacing the London Convention as the primary international regime for addressing ocean dumping. It is therefore crucial that the United States be able to fully participate in this forum to advance and protect key U.S. interests such as protection of the marine environment and proper regulation of legitimate uses of the oceans for disposal purposes.

Question. What has been the impact of the Cartagena Convention and the two Cartagena Protocols that we've joined regarding oil spills and specially protected areas and wildlife? Do you have any concerns about their operation thus far? Have these instruments been effectively implemented?

Answer. The Cartagena Convention (the Convention for the Protection and Development of the Marine Environment of the Wider Caribbean Region) serves as an umbrella agreement for addressing marine environmental protection in the Caribbean Region. Twenty-three nations in the Caribbean participate in this regime and overall the United States has been very satisfied with how the Cartagena Convention and its Protocols have been implemented.

The Protocol Concerning Cooperation in Combating Oils Spills has been very successful in strengthening oil spill preparedness and response capacity of the nations and territories of the region, and in facilitating co-operation and mutual assistance to prevent and control major oil spill incidents. The United States helps support a regional oil spill training and response center in Curacao, and has detailed a U.S. Coast Guard officer to this facility to provide technical assistance.

The Protocol Concerning Specially Protected Areas and Wildlife—the SPAW Protocol—has served as an important vehicle for promoting greater awareness of the threats to marine species in the region. The Protocol has made significant progress in helping Caribbean nations and territories better protect marine mammals, and has developed guidelines to help members evaluate and designate marine protected areas.

Question. The Land-Based Sources Protocol calls for international cooperation and assistance relating to land-based sources of maritime pollution. Does the United States already provide such assistance to nations in the Caribbean region? Would we be expected to provide additional assistance as a Party to the Protocol?

Answer. The United States already provides substantial assistance to nations in the Caribbean region for environmental programs, including for control of land-based sources of marine pollution. Much of our assistance to the region in this area is through in-kind services and the provision of technical expertise.

The United States provides technical advice on marine environmental protection to the Caribbean through USAID, the Department of Agriculture, NOAA and EPA. In addition, the United States is a principal contributor to the United Nation's Caribbean Environment Program (CEP), which supports marine environmental protection activities in the region. In recent years we have provided approximately $400,000 in annual support to the CEP's Caribbean Trust Fund, and an additional $50,000 or so for the CEP's work on land-based sources of marine pollution.

As a party to the Land-Based Sources Protocol, we would not incur any new funding obligations. Financing is done on a voluntary basis.

We nevertheless hope that entry into force of the Protocol may spur international donors to provide greater assistance to nations of the Caribbean to address these issues.

Question. Do you have any concerns regarding other countries that could join the Land-Based Sources Protocol, meeting the standards set forth in the Protocol and particularly Annex III of that Protocol?

Answer. The Land-Based Sources Protocol was negotiated with the aim of helping other countries in the region improve their domestic standards. We are aware that some of these countries face challenges in this regard, and are hopeful that the Land-Based Sources Protocol will provide a mechanism for them to raise their standards.

Question. Article 15 of the London Dumping Protocol states that "[i]n accordance with the principles of international law regarding State responsibility for damage to the environment of other States or to any other area of the environment, the Contracting Parties undertake to develop procedures regarding liability arising from the

dumping or incineration at sea of wastes or other matter." Have these procedures been developed since the Protocol entered into force? If so, please provide a copy for the committee's information. If not, please describe their status and indicate whether the United States is involved in the process of their development. Does the United States have any concerns regarding their development?

Answer. Article 15 liability procedures have not been developed under the London Protocol. Indeed, the second Meeting of Contracting Parties held in November 2007 agreed not to embark on the development of liability procedures under Article 15 at this stage. It is worth noting that the London Convention contains a similar provision in Article X regarding the development of liability procedures, but that no such procedures have ever been developed.

Article 15, like Article X of the London Convention, describes a process for consideration of this issue rather than mandating a specific outcome. Were this process to move forward, which it has not yet done, the United States would participate as fully as possible so as to advance and protect U.S. interests.

Question. Have there been any proposals to amend Annex I of the London Dumping Protocol since the addition of carbon dioxide streams from carbon dioxide capture processes for sequestration? If so, please provide information on such proposals, including the U.S. position on any such proposals.

Answer. We are unaware of any current proposals to amend Annex I.

Question. Article 26 of the London Dumping Protocol allows non-parties to the 1972 London Convention to declare, when ratifying the Protocol, that they require up to five years to comply with specified Protocol provisions. Have any such declarations been made thus far?

Answer. No Article 26 declarations have been made.

Question. The Anti-Fouling Convention uses the venue of the International Maritime Organization's Marine Environmental Protection Committee to review proposals to amend Annex 1 to the Convention. Does the United States have a seat on the Marine Environmental Protection Committee? If so, is it a permanent seat?

Answer. Pursuant to Article 37 of the Convention on the International Maritime Organization, the Marine Environment Protection Committee shall consist of all the Members. The United States became a Member of the International Maritime Organization in 1950 and plays a strong and active role in this committee.

Question. The Letter of Submittal for the Anti-Fouling Convention indicates that Article 5 will be implemented through existing provisions of the Solid Waste Disposal Act and the Clean Water Act. Please specify which provisions of these two acts will be relied upon to implement Article 5. See Treaty Doc. 110–13, Letter of Submittal at VII.

Answer. Article 5 of the Anti-Fouling Systems Convention addresses collection, handling, treatment and disposal of wastes associated with the application and removal of anti-fouling systems. Certain wastes generated during application and removal of anti-fouling paints may be considered hazardous wastes, due to their solvent and/or active ingredient content. Hazardous wastes are subject to Solid Waste Disposal Act (SWDA) requirements, including those addressing generation, transport, treatment, storage, and disposal (see SWDA §§ 3002, 3003, 3004). In addition § 301(a) of the Clean Water Act (CWA) regulates the discharge of pollutants into waters of the United States. Discharges from industrial facilities such as shipyards and dry-docks may be subject to permitting under CWA § 402, and those permits would establish technology-based effluent limits for discharges of pollutants from such facilities, and where necessary, any more stringent limits needed to achieve applicable water quality standards adopted by States or EPA under CWA § 303.

Question. Is it correct that the use of TBT as an anti-fouling coating on ships has already been phased out in the United States? When was the last FIFRA registration for TBT use on a ship cancelled?

Answer. The cancellation of the last FIFRA registration for a TBT antifouling coating product for hulls of ships and boats became effective on December 1, 2005. This is the date after which the registrant could no longer legally sell or distribute the product except as permitted in a limited existing stocks provision. The registrant was allowed until December 31, 2005 to sell any existing stocks of its product (produced before 12/1/05). Stocks in the hands of users may be used until exhausted. The functional shelf-life of this material is also limited, so significant use of the products at this time seems unlikely.

Section 13 of the proposed implementing legislation does allow continued use of TBT antifouling product on sonar domes and in conductivity sensors in oceanographic instruments.

Question. Where in the world are TBT-based anti-fouling systems still being produced and used?

Answer. It is our understanding that TBT-based systems are still produced in Asia, particularly Southeast Asia and Korea, although the extent has not been determined. In the past, there were a small number of U.S.-based companies that marketed TBT paint for export to the Caribbean, reportedly for use on pleasure craft. This practice may continue today on a small scale. A U.S. registration is not a requirement for export.

The European Union has already implemented restrictions for vessels bearing TBT on their hulls. The major cruise lines and many shippers have switched to non-TBT alternatives. Likely consumers of TBT paints would probably include owner/operators of vessels traveling within Asia where restrictions do not exist.

Question. Do any of these three environmental treaties (The Anti-Fouling Convention, the London Dumping Protocol, and the Land-Based Sources Protocol) provide for mandatory technology transfers?

Answer. No, there are no provisions in these treaties mandating technology transfer.

Question. Do any of these three environmental treaties (The Anti-Fouling Convention, the London Dumping Protocol, and the Land-Based Sources Protocol) provide a private right of action in U.S. courts for individuals claiming a violation of any of these treaties?

Answer. No.

RESPONSES TO ADDITIONAL QUESTIONS FOR THE RECORD SUBMITTED TO DEPUTY ASSISTANT SECRETARY DAVID A. BALTON BY SENATOR RICHARD G. LUGAR

Relating to Multiple Treaties

Question. Article 3(2) of the Convention on anti-fouling systems and Article 10(4) of the marine dumping protocol each exempt from the respective instruments' application certain categories of state vessels, but these provisions define differently the categories of vessels covered by the exemptions. Is there any difference in scope between the two exemptions? If so, please explain the difference and the rationale for it.

Answer. The London Protocol Article 10.4 language was taken from Article VII(4) of the 1972 London Convention. The Anti-Fouling Systems Convention Article 3.2 language was modeled after Article 3(3) of the International Convention on the Prevention of Pollution from Ships, 1973, and Article 236 of the United Nations Convention on the Law of the Sea. The language in these provisions effectively excludes the same vessels from coverage by the treaties. (It should be noted that the London Protocol also includes a reference to aircraft, which is explained by the fact that it covers aircraft within the scope of its obligations, while the Anti-Fouling Systems Convention does not.)

Relating to Treaty Doc. 110–13 (Anti-Fouling)

Question. Article 11 of the Convention refers to guidelines to be developed by the International Maritime Organization for the inspection of ships for the purpose of determining whether they are in compliance with the Convention.

a. Have such guidelines been developed? If so, please provide a copy of the guidelines.

b. If such guidelines have not yet been developed, please describe the status of the process for developing them and indicate when the guidelines are expected to be finalized.

c. Please indicate whether ship owners and operators have had or will have the opportunity to participate in the development of these guidelines, and describe the process allowing for such participation.

Answer. Article 11 guidelines under the Anti-Fouling Systems Convention have been developed in the form of MEPC.102(48) (see Attachment 1), MEPC.104(49) (see Attachment 2) and MEPC.105(49) (see Attachment 3). Additionally, work continues at the International Maritime Organization (IMO) to integrate this guidance into

the more general Survey Guidelines under the Harmonized System of Survey and Certification (A.948(23)) and the Procedures for Port State Control (A.787(19), as amended), which are presently under consideration for revision. Enhancements to the existing guidelines are likely to result from this ongoing work, within the next two to three years.

Ship owner and operator representatives have been, and continue to be, very active in the development of these guidelines. They participate at the relevant IMO Committee and Sub-committee meetings, both as members of national delegations and as members of non-governmental organization observer delegations such as International Chamber of Shipping, International Shipping Federation, and INTERTANKO. Further, they have made, and continue to make, their perspectives known to the United States delegation. They can do this on an ad hoc basis and via the Shipping Coordination Committee, in preparation for the relevant IMO meetings. The Shipping Coordination Committee is a public forum whose meetings are conducted as recorded proceedings, under the cognizance of the Department of State.

Question. The transmittal package for the Convention indicates that the Coast Guard has adequate existing authorities to compensate any meritorious claims with respect to undue delay or detention of ships raised pursuant to Article 13.

a. Please identify the authorities on which the Coast Guard would rely to address such cases.

b. Please indicate what standard would be used to determine the amount of damages in such cases, and the potential extent of damages that could arise.

Answer. The Coast Guard has existing authorities, such as the Suits in Admiralty Act and the Military Claims Act, which provide compensation mechanisms for meritorious claims of this nature. In the case where liability is found, the amount of damages would be subject to proof by the claimant of the type of damages payable in a civil action in admiralty if a private person had caused the same kind of injury. Damages might involve fixed costs like crew wages, dockage fees, and indemnification or contribution for losses to cargo interests for which the carrier would be responsible.

Relating to Treaty Doc. 110–5 (Marine-Dumping)

Question. Article 8(1) provides a force majeure exception to the protocol's prohibitions which applies, inter alia, in cases of a "real threat to vessels, aircraft, platforms or other man-made structures at sea." What is the meaning of the word "real" as used in this context? Does it have a substantive effect on the scope of the force majeure exception?

Answer. The force majeure exception under the London Protocol closely parallels the one found in London Convention Article V(1). It is intended to cover threats of an immediate nature to the safety of human life or of vessels, aircraft, platforms, or other man-made structures at sea. The term "real," which also is used in the London Convention provision, should be interpreted in the sense of "actual" and "imminent." Article 8(1) may be invoked only if dumping appears to be the only way of averting the threat and if there is every probability that the damage consequent upon such dumping will be less than would otherwise occur.

Question. Article 11 specifies that no later than two years after the protocol's entry into force, the Meeting of Contracting Parties shall establish procedures and mechanisms to assess and promote compliance with the protocol.

a. Have such procedures and mechanisms been finalized? If so, please provide a copy of the procedures and mechanisms. If not, please indicate the status of efforts to establish them.

b. What rules apply to the adoption of such procedures and mechanisms by the parties to the protocol? Must such procedures and mechanisms be adopted by consensus, or may they be adopted over the objection of one or more parties?

c. What legal effect will these procedures and mechanisms have for parties to the protocol? Will parties be legally obligated to comply with them?

Answer. The rules and procedures on compliance mandated by Article 11 of the London Protocol were adopted at the 2nd Meeting of Contracting Parties in November 2007 (LC 29/17 Annex 7, see Attachment 4). They were adopted by consensus.

The compliance procedures create a facilitative process that will not lead to binding consequences for Parties.

Question. Article 12 provides for parties to the protocol to engage in regional efforts consistent with the protocol to reduce and, where practicable, eliminate pollu-

tion caused by dumping or incineration at sea of wastes or other matter. Are any such efforts currently underway or anticipated with respect to regions of which the United States is a part? If so, please indicate the status and objectives of such efforts.

Answer. For more than thirty years, the U.S. has been a leader in the control of marine pollution from ocean disposal, and our technical experts are in high demand for advising other nations on managing their dredging programs and other ocean disposal activities. The United States has been an active participant in regional cooperation activities to improve management of ocean dumping, especially within the Western Hemisphere. In recent years, U.S. technical experts from EPA and the Army Corps have participated in regional workshops on ocean disposal in Ecuador, China, and Bahrain. We engaged with countries in the wider Caribbean to encourage them to join the London Convention and Protocol through UNEP's Caribbean Environment Programme. We are also an active member of the South Pacific Regional Environment Programme, and leader within that organization on preventing marine pollution from ocean dumping in the Pacific.

U.S. technical experts played a leading role in the London Convention/Protocol Scientific Group in developing "Waste Assessment Guidance" for evaluating various types of material for ocean disposal. This year EPA is providing the London Convention/Protocol Secretariat at the IMO with $80,000 to develop guidance for developing countries on dredged material management, and to promote training and capacity building in ocean dumping regulation. Over the next two years, we plan to contribute additional funds to this effort with a focus on Latin America and the Caribbean. Should we become Party to the London Protocol, we would expect to continue our leadership role in promoting cooperation and providing technical assistance on ocean dumping.

Question. Article 15 provides for parties to the protocol to develop procedures regarding liability arising from the dumping or incineration at sea of wastes or other matter.

a. What is the status of efforts to develop such procedures?

b. What rules apply to the adoption of such procedures by the parties to the protocol? Must such procedures be adopted by consensus, or may they be adopted over the objection of one or more parties?

c. What legal effect will such procedures have for parties to the protocol? Will parties be legally obligated to comply with them?

Answer. Article 15 liability procedures have not been developed under the London Protocol. Indeed, the second Meeting of Contracting Parties held in November 2007 agreed not to embark on the development of liability procedures under Article 15 at this stage. It is worth noting that the London Convention contains a similar provision in Article X regarding the development of liability procedures, but that no such procedures have ever been developed. The rules of procedure of the Protocol apply to adoption of all decisions and contain provisions on voting.

Article 15, like Article X of the London Convention, describes a process for consideration of this issue rather than mandating a specific outcome. Were this process to become active and were it to lead to the development of new legally binding obligations, there is nothing in the treaty that would authorize the automatic imposition of such obligations on Parties. A further instrument would be required and, were the United States to be interested in joining, it would need to obtain appropriate authority prior to becoming bound by any such obligations.

Question. Please explain why the Administration believes that the procedures in Article 16 for the resolution of disputes are appropriate to this protocol.

Answer. Article 16 and Annex 3 of the London Protocol set forth the process for settling any disputes that may arise. In the first instance, Parties are to resolve any such dispute through negotiation, mediation, conciliation or other peaceful means of their choice. If no resolution is reached, the dispute shall, at the request of any Party, be settled by arbitration, using procedures contained in Annex 3, unless the Parties to the dispute agree on a different mechanism. The Annex 3 arbitration procedures are identical to a proposed amendment to the London Convention that the U.S. ratified in the 1980's, but which never entered into force.

Given our experience under our environmental treaties, compliance issues are unlikely to be of a bilateral nature such that these kinds of procedures would be relevant. Rather, compliance issues have tended to be treated under multilateral, consultative compliance procedures. Nevertheless, the existence of the procedure may promote compliance by other Parties, which is an important U.S. objective.

Question. Please indicate what additional costs the International Maritime Organization is expected to incur in connection with the performance of Secretariat duties provided for in Article 19. Please also indicate what portion of any such additional costs will be assessed to the United States as an IMO member.

Answer. London Convention and London Protocol meetings are held jointly, and the programs and activities performed by the Secretariat in support of the London Protocol are effectively the same as those performed in support of the Convention. In 1996 the IMO Council agreed that the Secretariat would accept the functions assigned by the Protocol "on the understanding that additional functions shall not result in additional costs to the Organization." It is not possible to separate out the Secretariat's costs for supporting the Protocol from what it costs to support the Convention, but it would be no more than any additional costs incurred by additional Parties joining the Convention. The United States will bear no additional costs than it would as merely a Convention Party, since our IMO assessment is based on flag-state member ship tonnage.

ANNEX 7

COMPLIANCE PROCEDURES AND MECHANISMS PURSUANT TO ARTICLE 11 OF THE 1996 PROTOCOL TO THE LONDON CONVENTION 1972

1 GENERAL GUIDANCE

1.1 The objective of the compliance procedures and mechanisms is to assess and promote compliance with the 1996 Protocol to the London Convention 1972 (the Protocol) with a view to allowing for the full and open exchange of information, in a constructive manner.

1.2 The Meeting of Contracting Parties shall retain overall responsibility for compliance matters.

1.3 Any work on compliance shall be in accordance with these procedures or as otherwise authorized by the Meeting of Contracting Parties.

1.4 A Compliance Group (CG) is hereby established by the Meeting of Contracting Parties.

2 FUNCTIONS OF BODIES RELATED TO COMPLIANCE

2.1 The Meeting of Contracting Parties may:

.1 refer, as appropriate, compliance matters (individual situations of possible non-compliance, systemic issues and other compliance matters) to the Compliance Group and/or the LP Scientific Group;

.2 offer advice, assistance or co-operation to Contracting Parties and non-Contracting Parties, after full consideration of any information submitted pursuant to this Protocol and any recommendations made through these procedures and mechanisms;

.3 periodically review the effectiveness of the compliance procedures and mechanisms, including the roles of the Compliance Group, the LP Scientific Group and itself;

.4 review reports under Articles 9.4.1, 9.4.2, 9.4.3, 10.3, 26.5 and 26.6 pursuant to section 6 below and consider advice on these reports from the Compliance Group and/or the LP Scientific Group, as appropriate; and

.5 undertake other activities, as appropriate, to promote compliance.

2.2 The Compliance Group may:

.1 consider and assess an individual situation of a Party's possible non-compliance referred to it in accordance with section 4, with a view to identifying the facts, possible causes and specific circumstances;

.2 make recommendations to the Meeting of Contracting Parties on systemic compliance issues referred to it or that it proposes to pursue;

.3 make recommendations to the Meeting of Contracting Parties on individual situations of possible non-compliance as described in section 5;

.4 make recommendations to the Meeting of Contracting Parties on other activities to promote compliance;

.5 review the implementation of Meeting of Contracting Parties' recommendations and decisions on compliance;

.6 review and provide advice to the Meeting of Contracting Parties on reports and records submitted as described in section 6 below;

.7 with a view to addressing compliance issues without delay provide advice and guidance to a Party pending consideration by the Meeting of Contracting Parties;

.8 upon request of a non-Party, provide advice and guidance to facilitate its becoming a Party to the Protocol; and

.9 request advice and information from the LP Scientific Group.

2.3 The LP Scientific Group may, within its terms of reference, contribute to the work of the Compliance Group.

3 CHARACTERISTICS AND OPERATIONS OF THE COMPLIANCE GROUP

3.1 The Compliance Group shall be limited in size to fifteen members.

3.2 The Compliance Group shall be composed of individuals selected on the basis of their scientific, technical or legal expertise.

3.3 Members shall serve objectively and in the interest of promoting compliance with the Protocol.

3.4 Members shall be nominated by Contracting Parties, based on equitable and balanced geographic representation of the five Regional Groups of the UN, and elected by the Meeting of Contracting Parties.

3.5 The Meeting of Contracting Parties shall elect five of the members for one term, five of the members for two terms, and five of the members for three terms. The Meeting of Contracting Parties shall, at each ordinary meeting thereafter, elect for three full terms new members to replace those members whose period of office has expired, or is about to expire. Members shall not serve for more than three consecutive terms. For the purpose of this decision, "term" means the period that begins at the end of one ordinary Meeting of Contracting Parties and ends at the next ordinary session of the Meeting of Contracting Parties.

3.6 The Compliance Group shall elect its own Chairman and Vice-Chairman.

3.7 The Compliance Group shall meet as necessary at least once a year and when specifically requested to do so by the Meeting of Contracting Parties. In determining the dates of the meetings, due consideration should be given to the meeting schedules of the Meeting of Contracting Parties and other relevant bodies under the Protocol.

3.8 Any Party or any non-Party observer may attend meetings of the Compliance Group, except that when individual situations of compliance are under consideration by the Compliance Group, the meeting shall be closed if the Party whose compliance is in question so requests.

3.9 The members of the Compliance Group shall make every effort to reach agreement on all matters by consensus. If all efforts to reach consensus have been exhausted and no agreement has been reached, the Compliance Group shall act, as a last resort, by a three-quarters majority vote of the members present and voting. Where consensus cannot be reached, the report shall reflect the views of all members of the Compliance Group.

3.10 Two-thirds of the members of the Compliance Group shall constitute a quorum.

3.11 In carrying out its functions, the Compliance Group may seek, or receive, and consider relevant information from any source it considers to be reliable.

4 SUBMISSIONS AND PROCEDURES

4.1 An issue regarding individual situations of possible non-compliance may be raised by:

.1 the Meeting of Contracting Parties. This includes where the Meeting of Contracting Parties considers that information provided by Parties, the Secretariat or observers raises important compliance issues;

.2 a Party regarding itself; and

.3 a Party that has reservations about another Party's compliance with the obligations under the Protocol when it has an interest that is affected or likely to be affected by the possible non-compliance. A Party intending to make a submission under this sub-paragraph should before so doing undertake consultations with the Party whose compliance is in question.

4.2 The Compliance Group may reject submissions which it considers are *de minimis*, manifestly ill-founded, or anonymous.

4.3 A submission pursuant to paragraph 4.1 shall be addressed in writing to the Secretariat, and shall set out:

.1 the matter of concern;
.2 the relevant provisions of the Protocol; and
.3 information substantiating the submission.

4.4 The Secretariat shall forward all submissions within two weeks upon their receipt to the Compliance Group for consideration at its next meeting. In cases of submissions other than by a Party with respect to its own compliance, the Secretariat shall send within two weeks upon their receipt a copy to the Party whose compliance is in question. Notice of all submissions shall be sent to all Parties for their information. A copy of any full submission would be available to any Party upon request.

4.5 Comments or information provided in response by the Party whose compliance is in question should be forwarded to the Secretariat within three months upon receipt of the submission by the Party in question, unless the party requests an extension. Such extension may be provided by the Chairman for a period of up to 90 days, with a reasonable justification. Such comments or information shall immediately be forwarded by the Secretariat to the Compliance Group for consideration at its next meeting.

4.6 The International Atomic Energy Agency (IAEA) is the competent international body for all issues involving radioactive wastes and other radioactive matter and radiation protection of humans and the marine environment. Where a submission raises compliance matters involving radioactive wastes and other radioactive matter, the Secretariat, on behalf of the Compliance Group, shall refer the matter to the IAEA for technical evaluation and review. The Compliance Group shall take into account the IAEA's evaluation in its consideration of the matter.

5 MEASURES

5.1 Following consideration and assessment of an issue regarding a Party's possible non-compliance, and taking into account the capacity of the Party concerned, and the comments or information provided under 4.5, and such factors as the cause, type, degree and frequency of any non-compliance, the Compliance Group may recommend to the Meeting of Contracting Parties that one or more of the following measures be taken:

.1 the provision of advice and recommendations, with a view to assisting the Party concerned to implement the Protocol;

.2 the facilitation of co-operation and assistance;

.3 the elaboration, with the co-operation of the Party or Parties concerned, of compliance action plans, including targets and timelines; and

.4 the issuing of a formal statement of concern regarding a Party's compliance situation.

5.2 Where the Meeting of Contracting Parties has agreed to measures referred to in sub-paragraphs 5.1.1, 5.1.2, 5.1.3, or 5.1.4 regarding a Party's compliance situation, that Party may make a statement to the Meeting of Contracting Parties on its situation.

5.3 Prior to submitting recommendations to the Meeting of Contracting Parties, the Compliance Group shall share its conclusions and recommendations with the Party concerned for consideration and an opportunity to comment by the Party concerned. The nature of the opportunity to comment and any comments provided by the Party shall be annexed to the report of the Compliance Group to the Meeting of Contracting Parties.

5.4 The Meeting of Contracting Parties shall make the final decision regarding any measures proposed by the Compliance Group to be taken in response to a Party's possible non-compliance. The Meeting of Contracting Parties may also consider additional measures within its mandate, as appropriate, to facilitate compliance by the Party concerned.

6 REPORTS AND RECORDS

6.1 Reports and Records made pursuant to Articles 9.4.1, 9.4.2 and 9.4.3, 10.3, 26.5 and 26.6 shall be handled as described in the following paragraphs.

6.2 Parties shall maintain their own records under Article 9.4.1 and submit these to the Secretariat, which then transmits them to the LP Scientific Group and the Compliance Group. The LP Scientific Group will, in accordance with its terms of reference, evaluate this information and advise the Compliance Group, as appropriate, as well as the Meeting of Contracting Parties.

6.3 Once Parties' reports under Articles 9.4.2 and 9.4.3, (regarding administrative and legislative measures taken to implement the provisions of the Protocol, including a summary of enforcement measures, the effectiveness of such measures and any other problems encountered in their application) are submitted to the Secretariat, it shall refer them to the Compliance Group for evaluation. The Compliance Group will report its conclusions to an appropriate Meeting or Special Meeting of Contracting Parties.

6.4 The Secretariat shall compile the "Incident Information Forms" it receives under Article 10.3 and present a compilation of them to each Meeting of Contracting Parties for consideration, and, if appropriate, referral to the Compliance Group or the LP Scientific Group.

6.5 Parties that have made a notification under Article 26.1 regarding the need for a transitional period shall submit reports pursuant to Articles 26.5 and 26.6 to the Secretariat prior to each Meeting of Contracting Parties held during their transitional period. The Meeting of Contracting Parties shall take action on the reports, including, if appropriate, referral to the Compliance Group or the LP Scientific Group.

6.6 The Compliance Group shall submit a report to each Meeting of Contracting Parties presenting:

.1 the work that the Compliance Group has undertaken in fulfilling its functions concerning the compliance of individual Parties, including any recommendations to the Meeting of Contracting Parties;

.2 the work that the Compliance Group has undertaken in fulfilling its functions concerning systemic compliance issues, including recommendations, to the Meeting of Contracting Parties; and

.3 the Compliance Group's future work programme for the consideration and approval by the Meeting of Contracting Parties.

7 RELATIONSHIP WITH OTHER PROVISIONS OF THE PROTOCOL

This mechanism shall be without prejudice to the provisions of Article 16 of the Protocol on settlement of disputes.

**

ANNEX 8

RESOLUTION MEPC.102(48)

Adopted on 11 October 2002

GUIDELINES FOR SURVEY AND CERTIFICATION OF ANTI-FOULING SYSTEMS ON SHIPS

THE MARINE ENVIRONMENT PROTECTION COMMITTEE,

RECALLING Article 38(a) of the Convention on the International Maritime Organization concerning the functions of the Marine Environment Protection Committee conferred upon it by the international conventions for the prevention and control of marine pollution,

RECALLING ALSO that the International Conference on the Control of Harmful Anti-fouling Systems for Ships, 2001, held in October 2001, adopted the International Convention on the Control of Harmful Anti-fouling Systems on Ships, 2001 (the AFS Convention) together with four Conference resolutions,

NOTING that Article 10 of the AFS Convention prescribes that ships shall be surveyed and certified in accordance with the regulations of Annex 4 of the Convention,

NOTING ALSO that regulation 1(4)(a) of Annex 4 of the AFS Convention refers to the guidelines to be developed by the Organization and Conference resolution 2 urges the Organization to develop these guidelines as a matter of urgency for them to be adopted before the entry into force of the Convention,

HAVING CONSIDERED the draft Guidelines for Survey and Certification of Anti-fouling Systems on Ships prepared by the Sub-Committee on Flag State Implementation at its tenth session,

1. ADOPTS the Guidelines for Survey and Certification of Anti-fouling Systems on Ships, as set out in the Annex to this resolution;

2. INVITES Governments to apply the Guidelines as soon as possible, or when the Convention becomes applicable to them; and

3. RECOMMENDS that the Guidelines be reviewed on a regular basis.

ANNEX

GUIDELINES FOR SURVEY AND CERTIFICATION OF ANTI-FOULING SYSTEMS ON SHIPS

1 General

1.1 Article 10 of the International Convention on the Control of Harmful Anti-fouling Systems on Ships, 2001, hereinafter referred to as "the Convention," prescribes that ships shall be surveyed and certified in accordance with the regulations of Annex 4 of the Convention. The purpose of this document is to provide the Guidelines for Surveys and Certification of Anti-fouling Systems on Ships referred to in Regulation 1(4)(a) of Annex 4, hereinafter referred to as the "Guidelines", that will assist the Administrations and recognized organizations, in the uniform application of the provisions of the Convention and assist companies, shipbuilders, manufacturers of anti-fouling systems, as well as other interested parties to understand the process of the surveys and issuance and endorsement of the certificates.

1.2 These Guidelines provide the procedures for survey to ensure that a ship's anti-fouling system complies with the Convention, and those necessary for issuance and endorsement of an International Anti-fouling System Certificate. A guidance for compliant anti-fouling systems is given in the Appendix to this Annex.

1.3 These Guidelines apply to surveys of ships of 400 gross tonnage and above engaged in international voyages, excluding fixed or floating platforms, floating storage units (FSUs), and floating production storage and off-loading units (FPSOs), as specified in Regulation 1(1) of Annex 4 to the Convention.

1.4 The sole purpose of the survey activities described in these Guidelines is to verify compliance with the provisions of the Convention. Consequently, such surveys do not relate to any aspect not regulated by the Convention even if such aspects relate to the performance of an anti-fouling system on the hull of a ship, including the quality of workmanship during the application process.

1.5 In the event that a new survey method is developed, or in the event that the use of a certain anti-fouling system is prohibited and/or restricted, or in the light of experience gained, these Guidelines may need to be revised in the future.

2 Definitions

For the purposes of these Guidelines:

2.1 "Administration" means the Government of the State under whose authority the ship is operating. With respect to a ship entitled to fly a flag of a State, the Administration is the Government of that State. With respect to fixed or floating platforms engaged in exploration and exploitation of the sea-bed and subsoil thereof adjacent to the coast over which the coastal State exercises sovereign rights for the purposes of exploration and exploitation of their natural resources, the Administration is the Government of the coastal State concerned.

2.2 "Anti-fouling system" means a coating, paint, surface treatment, surface, or device that is used on a ship to control or prevent attachment of unwanted organisms.

2.3 "Company" means the owner of the ship or any other organization or person such as the manager or the bareboat charterer, who has assumed the responsibility for the operation of the ship from the owner of the ship and who, on assuming such responsibility, has agreed to take over all duties and responsibilities imposed by the International Safety Management (ISM) Code.

2.4 "Gross tonnage" means the gross tonnage calculated in accordance with the tonnage measurement regulations contained in Annex 1 to the International Convention on Tonnage Measurement of Ships, 1969, or any successor Convention.

2.5 "International voyage" means a voyage by a ship entitled to fly the flag of one State to or from a port, shipyard, or offshore terminal under the jurisdiction of another State.

2.6 "Length" means the length as defined in the International Convention on Load Lines, 1966, as modified by the Protocol of 1988 relating thereto, or any successor Convention.

2.7 "Ship" means a vessel of any type whatsoever operating in the marine environment and includes hydrofoil boats, air-cushion vehicles, submersibles, floating craft, fixed or floating platforms, floating storage units (FSUs) and floating production storage and off-loading units (FPSOs).

3 When are surveys required

3.1 An initial survey should be carried out:

.1 for a newbuilding; or

.2 for an existing ship, before the International Anti-fouling System Certificate required under Regulations 2 or 3 of Annex 4 to the Convention is issued for the first time.

3.2 In order to ease the burden on the companies and other parties, the initial survey of the anti-fouling system on existing ships may best be carried out in connection with a drydock survey.

3.3 A survey should be carried out whenever an anti-fouling system is changed or replaced. Such surveys should cover the same scope as in Section 5.2.

3.4 A major conversion affecting the anti-fouling system of a ship may be considered as a newbuilding as determined by the Administration.

3.5 Repairs generally do not require a survey. However, repairs affecting approximately twenty-five (25) percent or more of the anti-fouling system, should be considered as a change or replacement of the anti-fouling system.

3.6 A non-compliant anti-fouling system controlled under Annex I of the Convention, that undergoes repair must be repaired, or replaced with a compliant anti-fouling system.

4 Request for survey

4.1 Prior to any survey, a request for survey should be submitted by the Company to the Administration, or to a recognized organization along with the ship's data required in the International Anti-fouling System Certificate as listed:

.1 Name of ship

.2 Distinctive number or letters

.3 Port of registry

.4 Gross tonnage

.5 IMO number

4.2 A request for survey should be supplemented by a declaration and supporting information from the anti-fouling system manufacturer, confirming that the anti-fouling system applied, or intended to be applied to the ship is in compliance with the requirements of the Convention (with an identification of the version of the Convention referred to). Such declaration should provide the following information contained in the Record of Anti-Fouling System, as can be found in Appendix 1 to Annex 4 of the Convention:

.1 Type of anti-fouling system[1]

.2 Name of anti-fouling system manufacturer

.3 Name and colour of anti-fouling system

.4 Active ingredient(s) and their Chemical Abstract Service Registry Number (CAS number(s))

Information required by the surveyor regarding compliance of product with the Convention should be found in a declaration from the anti-fouling system manufacturer which may be provided on the anti-fouling system container and/or on supportive documentation (such as Material Safety Data Sheets (MSDSs), or similar). A link between the supportive documentation and the relevant container should exist.

5 Conduct of surveys

5.1 Surveys for newbuildings

.1 As part of the survey, it should be verified that the anti-fouling system specified by the documentation submitted with the request for survey complies with the Convention. The survey should include verification that the anti-fouling system applied is identical to the system specified in the request for survey.

---

[1] Examples of suitable wording could be: Organotin-free self polishing type, Organotin-free ablative type, Organotin-free conventional, Biocide-free silicon type paint, others. In the case of an anti-fouling system containing no active ingredients, the words 'biocide-free' should be used.

.2 Taking into account experience gained and the prevailing circumstances, the verification required by paragraph 5.1.1 should include one or more of the following tasks, as deemed necessary to verify compliance:

(a) Checking that the product identification on anti-fouling system containers used during the application process is identical to the system specified in the request for survey.

(b) Sampling of the anti-fouling system.

(c) Testing of the anti-fouling system.

(d) Other checks conducted on site.

.3 The verification tasks set out in paragraph 5.1.2 should be conducted at any time, either before, during, or after the anti-fouling system has been applied to the ship, as deemed necessary to verify compliance. No checks or tests must affect the integrity, structure or operation of the anti-fouling system.

5.2 Surveys of existing ships intending to apply a new anti-fouling system

.1 If the existing anti-fouling system is confirmed by an International Anti-fouling System Certificate not to be controlled under Annex 1 of the Convention, the provisions described in paragraph 5.1 apply.

.2 If the existing anti-fouling system is declared not to be controlled under Annex 1 of the Convention, without being documented by an International Anti-Fouling System Certificate, a verification should be carried out to confirm that the anti-fouling system complies with the requirements of the Convention. This verification may be based on sampling and/or testing and/or reliable documentation, as deemed necessary based on experience gained and the existing circumstances. Documentation for verification could e.g. be MSDSs, or similar, a declaration of compliance from the anti-fouling system manufacturer, invoices from the shipyard and/or the anti-fouling system manufacturer. To verify the new anti-fouling system, the provisions described in paragraph 5.1 apply.

.3 If the existing anti-fouling system has been removed, the removal should be verified in addition to the provisions described in paragraph 5.1.

.4 If a sealer coat has been applied, a verification should be carried out to confirm that the name, type and colour of the sealer coat applied to the ship match those specified in the request for survey, and that the existing anti-fouling system has been covered with that sealer coat. Additionally the provisions described in paragraph 5.1 apply.

.5 If the existing anti-fouling system is controlled under Annex 1 of the Convention, it should be removed according to sub-paragraph 5.2.3 or covered by a sealer coat according to sub-paragraph 5.2.4 not later than 1 January 2008. Prior to this date, the existing anti-fouling system may be over-coated with an anti-fouling system not controlled under Annex 1 without removing or sealing the existing anti-

fouling system. This option should be stated on the International Anti-Fouling System Certificate by ticking off the appropriate box. To verify the new anti-fouling system, the provisions described in paragraph 5.1 apply.

5.3 Surveys of existing ships requesting only an International Anti-fouling System Certificate

.1 If the existing anti-fouling system is declared to be controlled under Annex 1 of the Convention (i.e. containing prohibited/regulated compounds), an International Anti-fouling System Certificate may be issued on request stating that the anti-fouling system will be removed, or covered with a sealer coat when directed by the Convention.

.2 If the existing anti-fouling system is declared not to be controlled under Annex 1 of the Convention, a verification should be carried out to confirm that the anti-fouling system complies with the requirements of the Convention. This verification may be based on sampling and/or testing and/or reliable documentation, as deemed necessary based on experience gained and the existing circumstances. Such documentation could be MSDSs or similar, a declaration of compliance from the anti-fouling system manufacturer, invoices from the shipyard and/or the anti-fouling system manufacturer. If this information raises no reasonable doubt that the system applied is compliant with Annex 1 of the Convention, the International Anti-fouling System Certificate may be issued on this basis.

5.4 Surveys of ships prior to entry into force of the Convention

.1 Prior to the Convention having entered into force, an Administration may conduct surveys of ships in accordance with these Guidelines, and may then issue a Statement of Compliance to this effect.

.2 Ships capable of documenting full compliance with the Convention through such a statement of compliance may be issued, upon entry into force of the Convention, an International Anti-fouling System Certificate on that basis, subject to any additional requirements from the Administration.

6 Issuing or endorsing the International Anti-fouling System Certificate

6.1 The International Anti-fouling System Certificate along with the Record of Anti-fouling Systems should be:

.1 issued upon satisfactory completion of the initial survey;

.2 issued upon acceptance of another Party's International Anti-fouling System Certificate; or

.3 endorsed upon satisfactory completion of a survey for change or replacement of an anti-fouling system.

APPENDIX

Guidance for compliant anti-fouling systems

For the purpose of compliance with Annex I of the Convention, small quantities of organotin compounds acting as a chemical catalyst (such as mono- and di- substituted organotin compounds) are allowed, provided that they are present at a level which does not provide a biocidal effect to the coating. On a practical level, when used as a catalyst, an organotin compound should not be present above 2,500 mg total tin per kg of dry paint.

***

ANNEX 9

RESOLUTION MEPC.104(49)

Adopted on 18 July 2003

GUIDELINES FOR BRIEF SAMPLING OF ANTI-FOULING SYSTEMS ON SHIPS

THE MARINE ENVIRONMENT PROTECTION COMMITTEE,

RECALLING Article 38(a) of the Convention on the International Maritime Organization concerning the functions of the Marine Environment Protection Committee conferred upon it by the international conventions for the prevention and control of marine pollution,

RECALLING ALSO that the International Conference on the Control of Harmful Anti-fouling Systems for Ships, 2001, held in October 2001, adopted the International Convention on the Control of Harmful Anti-fouling Systems on Ships, 2001 (the AFS Convention) together with four Conference resolutions,

NOTING that article 11(1) of the AFS Convention prescribes that ships to which this Convention applies may, in any port, shipyard, or offshore terminal of a Party, be inspected by officers authorized by that Party for the purpose of determining whether the ship is in compliance with this Convention, and that such inspection includes brief sampling of the ship's anti-fouling system,

NOTING ALSO that article 11(1) of the AFS Convention refers to the guidelines to be developed by the Organization and Conference resolution 2 urges the Organization to develop these guidelines as a matter of urgency for them to be adopted before the entry into force of the Convention,

NOTING FURTHER that through resolutions MEPC.102(48) and MEPC.105(49) the Organization has developed "Guidelines for Survey and Certification of Anti-fouling Systems on Ships" and "Guidelines for Inspection of Anti-fouling Systems on Ships", respectively, and

HAVING CONSIDERED the recommendation made by the Sub-Committee on Flag State Implementation at its eleventh session,

1. ADOPTS the Guidelines for brief sampling of anti-fouling systems on ships, the text of which is set out in the Annex to this resolution;

2. INVITES Governments to apply the Guidelines as soon as possible, or when the Convention becomes applicable to them; and

3. RECOMMENDS that the Guidelines be reviewed on a regular basis.

ANNEX

GUIDELINES FOR BRIEF SAMPLING OF ANTI-FOULING SYSTEMS ON SHIPS

TABLE OF CONTENTS

1. General

Purpose
Structure of these Guidelines

2. Definitions

3. Personnel safety when sampling

Health
Safety

4. Sampling and analysis

Sampling methods
Technical aspects
Sampling strategy and number of samples
Analysis

5. Thresholds and tolerance limits

Thresholds
Tolerance range

6. Definition of compliance

7. Documentation and recording of information

Appendix:	Possible methods for brief sampling and analysis of anti-fouling systems on ships - organotin
Method 1	
Appendix to Method 1:	Record sheet for the brief sampling procedure for compliance with the Convention in terms of the presence of organotin acting as a biocide in anti-fouling systems on ship hulls
Method 2	
Appendix to Method 2:	Record sheet for the sampling and analysis of anti-fouling systems on ship hulls - organotin compounds

1 General

Purpose

1.1 Article 11 of the International Convention on the Control of Harmful Anti-fouling Systems on Ships, 2001, hereinafter referred to as "the Convention", and resolution MEPC.102(48) Guidelines for Survey and Certification of Anti-Fouling Systems on Ships refer to sampling as a method of verification of compliance of a ships anti fouling system with the Convention for inspection and survey.

1.2 The "Guidelines for Brief Sampling of Anti-Fouling Systems on Ships", hereinafter referred to as "the Guidelines", provide procedures for sampling to support the effectiveness of survey and inspection to ensure that a ship's anti-fouling system complies with the Convention and thus assists:

.1 Administrations and recognized organizations (ROs) in the uniform application of the provisions of the Convention;

.2 port State control officers with guidance on methods and handling of brief sampling in accordance with Article 11(1)(b) of the Convention; and

.3 companies, shipbuilders, manufacturers of anti-fouling systems, as well as any other interested parties in understanding the process of sampling as required in terms of the Convention.

1.3 However, inspections or surveys do not necessarily always need to include sampling of anti-fouling system.

1.4 These Guidelines apply to surveys and inspections of ships subject to the Convention.

1.5 The sole purpose of the sampling activities described in the Guidelines is to verify compliance with the provisions of the Convention. Consequently, such activities do not relate to any aspect not regulated by the Convention, (even if such aspects relate to the performance of an anti-fouling system on the hull of a ship, including the quality of workmanship).

Structure of these Guidelines

1.6 These Guidelines contain:

.1 a main body covering aspects of general nature common to "sampling" procedures related to the regulation of anti-fouling systems controlled by the Convention; and

.2 appendices describing the unique procedures associated with the sampling and analysis of anti-fouling systems controlled by the Convention. These appendices only serve as examples of sampling and analytical methods and other sampling methods not described in an appendix may be used subject to the satisfaction of the Administration or the port State, as appropriate.

1.7 For reasons including the event of other anti-fouling systems becoming controlled under the Convention, or in the light of new experience acquired, these Guidelines may need to be reviewed or amended in the future.

2 Definitions

For the purposes of these Guidelines:

2.1 "Administration" means the Government of the State under whose authority the ship is operating. With respect to a ship entitled to fly a flag of a State, the Administration is the Government of that State. With respect to fixed or floating platforms engaged in exploration and exploitation of the sea-bed and subsoil thereof adjacent to the coast over which the coastal State exercises sovereign rights for the purposes of exploration and exploitation of their natural resources, the Administration is the Government of the coastal State concerned.

2.2 "Anti-fouling system" means a coating, paint, surface treatment, surface or device that is used on a ship in order to control or prevent attachment of unwanted organisms.

2.3 "Threshold value" means the concentration limit of the chemical under investigation below which compliance with the relevant provisions of the Convention may be assumed.

2.4 "Company" means the owner of the ship or any other organization or person such as the manager or the bareboat charterer, who has assumed the responsibility for the operation of the ship from the owner of the ship and who, on assuming such responsibility, has agreed to take over all duties and responsibilities imposed by the International Safety Management (ISM) Code.

2.5 "Length" means the length as defined in the International Convention on Load Lines, 1966, as modified by the Protocol of 1988 relating thereto, or any successor Convention.

2.6 "Tolerance range" means the numerical range added to the threshold value indicating the range where detected concentrations above the threshold value are acceptable due to recognised analytical inaccuracy and thus do not compromise the assumption of compliance.

3 Personnel safety when sampling

Health

3.1 Persons carrying out sampling should be aware that solvents or other materials used for sampling may be harmful. Wet paint which is sampled may also be harmful. In these cases the material safety data sheet (MSDS) for the solvent or paint should be read and appropriate precautions should be taken. This will normally include the wearing of long sleeve solvent resistant gloves of suitable impervious material - e.g. nitrile rubber.

3.2 Quantities of dry anti-fouling paint removed during sampling from ships' hulls will normally be too small to cause significant health effects.

Safety

3.3 Access to ships to carry out sampling safely may be difficult. If a ship is moored alongside persons carrying out sampling must ensure they have safe access to reach the hull from e.g. platforms, crane baskets, cherry-pickers, gangways. They must ensure that they are protected by railings or a climbing harness or take other precautions so that they cannot fall into the water between the quay and the ship. If in doubt a lifejacket and possibly a safety line, should be worn when sampling.

3.4 Access to ships in dry-dock should be made by secure means. Scaffolding should be securely constructed and cherry-pickers or dock-arms should be properly constructed and maintained if they are to be used to gain access. There should be a system to record the presence of the inspector in the dock area, and he should preferably be accompanied. Safety harnesses should be worn in cherry-picker baskets, if used.

4 Sampling and Analysis

Sampling methods

4.1 During sampling, care should be taken not to affect the integrity or operation of the anti-fouling system.

4.2 Sampling where the anti-fouling coating is visibly damaged[1] or on block mark areas on the flat bottom of the ship (where the intact anti-fouling system is not applied) should be avoided. Sampling adjacent to or below areas where the anti-fouling system is damaged should also be avoided. When a sample point on the hull has been selected, any fouling present should be removed with water and a soft sponge/cloth before taking a specimen of the anti-fouling system (to avoid contamination of sample). Where possible, if carried out in dry-dock, sampling should be carried out after the hull has been water-washed.

4.3 The materials required for brief sampling methodologies should ideally be inexpensive, widely available and therefore readily accessible, irrespective of sampling conditions and/or location.

4.4 The sampling procedure should ideally be easily and reliably undertaken. Persons conducting sampling should receive appropriate training in sampling methods.

Technical aspects

4.5 The sampling method should take into account the type of anti-fouling system used on the ship.

4.6 Specimens of paint for analysis during survey and certification can be taken either as wet paint[2] from product containers, or dry paint film sampled from the hull.

Sampling strategy and number of samples

4.7 The sampling strategy is dependent on the precision of the sampling method, the analytical requirements, costs and required time and the purpose of the sampling. The number of

---

[1] During in-service periods, anti-fouling coatings on ships' hulls often become damaged. The extent of damage varies between ships and damaged areas can be visually recognised. Typically damage can be restricted to localised areas e.g. anchor chain damage (bow region), fender damage (vertical sides of hull), 'rust through areas' (underlying rust causing coating failure) or in some cases be in smaller areas scattered over larger areas of the hull (usually older ships where over-coating of original system has taken place many times).

[2] In order to prevent contamination, wet paint samples should be taken from a newly opened container. Paint should be stirred to ensure even consistency before sampling and all equipment used should be cleaned prior to use. Liquid paint samples should be stored in appropriate sealed packaging which will not react with or contaminate the sample. In the case of multi-component coatings (where on-site mixing of several components is required prior to application), samples of each component should be taken and the required mixing ratio recorded. When a sample of wet paint is taken from a container, details of the paint should be recorded e.g. details required for the IAFS Certificate along with a batch number for the product.

paint specimens taken of each sample should allow for a retention quantity for back-up/storage in the event of a dispute. For dry samples, triplicate specimens of paint at each sampling point should be taken in close proximity to each other on the hull (e.g. within 10 cm of each other).

4.8 In cases where it is recognized that more than one type of anti-fouling system is present on the hull, where access can be gained, samples should be taken from each type of system:

.1 for survey purposes or for more thorough inspections pursuant to article 11(2) of the Convention, in order to verify the compliance of an anti-fouling system, the number of sample points should reflect representative areas of the ship's hull; and

.2 for inspection purposes pursuant to article 11(1) of the Convention sample points on the hull should be selected covering representative areas where the anti-fouling system is intact. Depending on the size of the vessel and accessibility to the hull, at least four sample points should be equally spaced down the length of the hull. If sampling is undertaken in dry-dock, flat bottom areas of the hull should be sampled in addition to vertical sides as different anti-fouling systems can be present on these different areas.

Analysis

4.9 The analysis of the anti-fouling system should ideally involve minimal analytical effort and economic cost.

4.10 The analysis should be conducted by a recognized laboratory meeting the ISO 17025 standard or another appropriate facility at the discretion of the Administration or the port State.

4.11 The analytical process should be expeditious, such that results are rapidly communicated to the officers authorized to enforce the Convention.

4.12 The analysis should produce unambiguous results expressed in units consistent with the Convention and its associated Guidelines. For example, for organotin, results should be expressed as: mg tin (Sn) per kg of dry paint.

NOTE: Compound-specific sampling and analytical methodologies are described in the appendices to these Guidelines.

5 Thresholds and tolerance limits

Thresholds

5.1 The analysis should be quantitative to the point of being able to accurately verify the threshold limits within the given tolerance.

5.2 In cases where compliance with acceptable limits, or lack thereof, is unclear, additional sampling or other methodologies for sampling should be considered.

Tolerance range

5.3 Statistical reliability for each (compound-specific) brief sampling procedure should be documented. The analysis should be quantitative to the point of being able to accurately verify

the threshold limits within the given tolerance. On the basis of these data a compound-specific tolerance range should be derived and stated compound-specific in the method description. In general, the tolerance range should not be higher than the standard deviation under typical conditions for testing and should under no circumstances go beyond 30 %.

6 Definition of compliance

6.1 Compliance with Annex 1 of the Convention is assumed if the anti-fouling system contains organotin at a level which does not provide a biocidal effct . In practice organotin compounds should not be present above 2,500 mg organotin (measured as Sn) per kg of dry paint.

6.2 Compliance is largely dependent on the results of sampling and subsequent analysis. As every method of sampling and analysis has its specific accuracy, a compound-specific tolerance level may be applied in borderline cases with concentrations very close to the threshold level.

6.3 In general, compliance is assumed when the samples yield results below the threshold value.

7 Documentation and recording of information

7.1 The results of the sampling procedure should be fully documented on a method-specific record sheet. Examples are provided in the appendices to these Guidelines.

7.2 Such record sheets should be completed by the sampler and should be submitted to the competent authority of the Port State or Administration.

APPENDIX

POSSIBLE METHODS FOR BRIEF SAMPLING AND ANALYSIS OF ANTI-FOULING SYSTEMS ON SHIPS

- ORGANOTIN -

METHOD 1

1 Purpose of this method concerning brief sampling and analysis of anti-fouling systems

1.1 This method has been developed in order to describe a rapid methodology appropriate for the identification of anti-fouling systems on ship hulls containing organotin compounds acting as biocide. This method has been designed such that sealers should not be affected, and any underlying anti-fouling agent (or primer) is not taken up in the sampling procedure. The method is not recommended for silicon-based anti-fouling systems.

1.2 This method is based on a two-step analysis. The first step detects total tin as an indicator for organotin; the second step, detecting specific organotin compounds, is only necessary in the case of the first step proving positive.

2 Sampling device and materials

2.1 The sampling device is constructed in a way that only the upper layer of paint is removed, thereby and should leave any underlying paint (sealer, primer etc.) intact. This result is achieved through the use of a moving disk, (eccentric rotation) which is covered by an abrasive material like quartz or glass fibre fabric. This abrasive material has to be suitable for its use as a supporting material for the removed paint.

2.2 The device fulfils the following requirements:

.1 the device has to work independently from any stationary power supply. The device may be driven by an electrical motor (battery-driven) or may be mechanically driven by a clockwork-like spring, provided it is able to sustain the movement over the required time period;

.2 the applied force has to be constant during the operation, and the area for paint removal has to be defined;

.3 the abrasive material has to be inert against chemical solvents and acids and must not contain more than trace amounts of tin or tin compounds; and

.4 the amount of paint removed after a regular operation of the device has to be shown to exceed 20 mg per sample.

2.3 The device as described in the following section has been shown to be suitable for the brief sampling procedure. Any other device may be used however, provided such a device has proven to meet all the above-mentioned requirements.

2.4 The sampling device described here consists of a polyethylene disk, on which fibre glass fabric can be mounted by the use of an O-ring. The disk is moved on an eccentrically rotating axis.

3 Sampling procedure

3.1 The sampling procedure should be performed in the following manner:

.1 control samples should be taken through the entire sampling and analytical process to account for possible contamination;

.2 the mass of the fibre glass pads is weighed with a precision of at least 1 mg. The weight should be documented for each sample;

.3 the fabric should be moistened thoroughly with isopropanol (0.7ml per sample) immediately before sampling;

.4 when a sample point on the hull has been selected, any fouling present should be removed with water and a soft sponge/cloth before taking a specimen of the anti-fouling system (to avoid contamination of sample). Where possible, if carried out in dry-dock, sampling should be carried out after the hull has been water-washed;

.5 the sampling device is then held against the surface to be sampled for a period of 5 seconds, prior to the sampling device being switched on;

.6 the sampling device is switched on, thereby removing paint by the circular motion of the fibre glass fabric against the surface of the ship;

.7 the sampling device should be applied to the surface of the hull for a suitable period of time, such that at least 20 mg of paint is taken up by the pad. As a general rule, if the pad colour after sampling matches the colour of the hull coating a sufficient sample has been taken;

.8 the two-step analysis procedure requires that every sample should be taken in triplicate. Two of the specimens should be labelled Specimen 'A' and Specimen 'B'. In addition a third specimen for storage/back-up should be taken. These specimens should be taken as close to each other as possible, but without overlap; and

.9 upon completion of the sampling, the fibre glass fabric pads should be left to dry, and re-weighed.

3.2 Samples should be stored in appropriate sealed packaging, which will not react with or contaminate the sample.

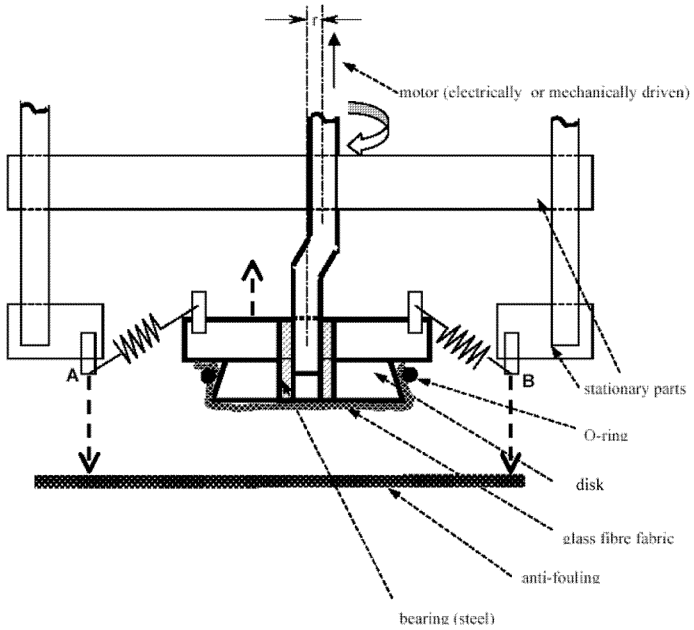

DIAGRAM A: Schematic cross section of the sampling device

The indicated points A and B are to be pressed against the surface. The polyethylene disk, covered with the glass fibre fabric, is moved with an amplitude of 2 r (r = 1,0 cm) on the surface.

Specific data:

Force applied on the paint surface:	25N (Newton)
Effective diameter of the disk:	5cm
Frequency of rotation:	6 rotations/s
Solvent used	isopropanol (0.8ml per sample).

4 Sampling strategy

4.1 Sampling should be conducted in accordance with paragraph 4 of the Guidelines.

4.2 For inspection purposes in most cases accessibility to all parts of the hull will not be given. A minimum number of eight independent samples should be taken from different accessible parts of the hull.

5 Analytical procedure

5.1 The two components comprising the analytical procedure are illustrated in the flow diagram B. The two components, or steps, are as follows:

.1 (STEP 1) - An analysis of Specimen A for the presence of total tin; and

.2 (STEP 2) - A more cost- and time-consuming analysis of Specimen B, that is applied only when Step 1 produces positive results. This test involves organotin analysis by gas chromatography/mass spectrophotometry (GC/MS) after derivatisation and provides specific data on the respective organotin species.

Step 1: Investigation of total tin content in Specimen 'A'

Analysis of Specimen 'A'

5.2 Specimen 'A' is analysed for mass of total tin per kilogram of dry paint (or mass of tin per sample) by applying inductively coupled plasma/mass spectrometry (ICP/MS), once the material had been solubilized by digestion using aqua regia. It should be noted that any other scientifically recognized procedure for tin analysis (such as AAS, XRF and ICP-OES) is acceptable.

Step 2: Characterization of organotin in Specimen 'B'

Analysis of Specimen 'B'

5.3 Should Specimen 'A' produce positive results, organotin compounds should be identified and quantified in Specimen 'B'. Specimen 'B' may be analysed using the following procedure:

.1 solvent extraction of Specimen 'B' as supported by sonication in an ultrasonic bath;

.2 derivatisation with ethylmagnesium bromide;

.3 clean-up of the extract;

.4 analysis using high resolution gas chromatography/mass spectrophotrometry (GC/MS); and

.5 quantifications using tripropyltin as a standard.

5.5 Any equally reliable method for the chemical identification and quantification of organotin compounds is acceptable.

6 Threshold and tolerance range

6.1 The threshold value for the brief sampling method as described here is:

"2,500mg tin (Sn) per kg of dry paint."

Tolerance range

6.2 The tolerance range is 500mg Sn / kg of dry paint (20%) in addition to the threshold value.

Organotin containing compounds acting as biocides or catalysts

6.3 As stated in the appendix of resolution MEPC.102(48), for the purposes of defining compliance with annex 1 of the Convention, it should be noted that small quantities of organotin compounds, acting as chemical catalysts (such as mono- and di-substituted organotin compounds) are allowed, provided they are not acting as a biocide.

6.4 Inorganic impurities in the constituents of the paints should be considered.

6.5 At present neither organotin catalysts nor inorganic impurities are found at concentrations which will be close to the threshold level (2,500mg Sn/kg of dry paint) or higher. However, organotin-containing compounds, when present in paint in order to act as a biocide, were found in concentrations up to 50,000mg Sn/kg of dry paint. Thus the discrimination between anti-fouling systems containing organotin compounds acting as a biocide and anti-fouling systems not containing these compounds or not containing these compounds at concentrations where they act as a biocide, is reliably possible.

7 Definition of compliance

Two-step procedure

7.1 The analytical verification of the compliance with the Convention is performed in a two-step procedure according to the flow-diagram (diagram B).

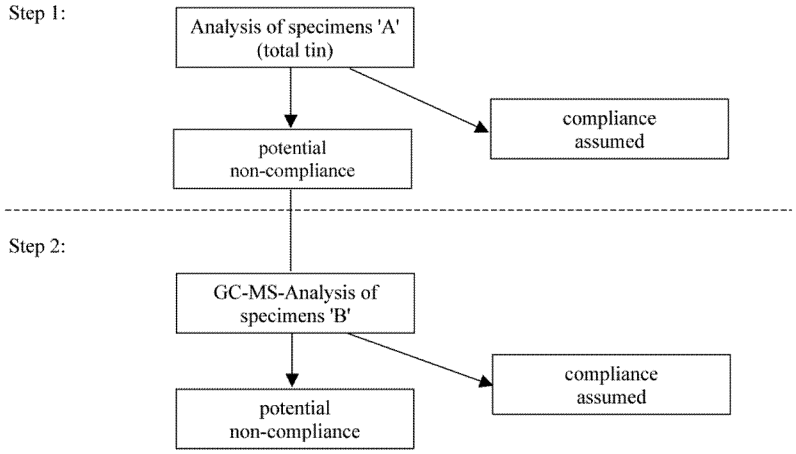

DIAGRAM B: Flow diagram illustrating the two-step analysis procedure

Compliance with the criteria at the 'Step 1-level'

7.2 Compliance with the Convention is assumed when the results from the specimens 'A', analysed in step 1, meet the following:

.1 no more than 25% of the total number of samples yield results above 2,500 milligrams total tin per kilogram dry paint (2,500 mg Sn/kg of dry paint); and

.2 no sample of the total number of at least eight samples shows a concentration of total tin higher than the sum of threshold value plus the tolerance range, i.e. no sample must exceed the concentration 3,000 mg Sn/kg of dry paint.

7.3 If the results in specimen 'A' indicate that no organotin acting as biocide is present, then performing step 2 is not necessary.

Non-compliance with the criteria at the 'Step 1-level'

7.4 A positive result (non-compliance) is indicated if provisions of paragraph 7.2 are not met.

7.5 A positive result at step 1 (specimen 'A') would indicate that step 2 should be undertaken, and those samples labelled specimen 'B' should be analysed in order to determine and characterize the organotin present (see diagram B).

Compliance with the criteria at the 'Step 2-level'

7.6 Compliance with the Convention is assumed when the results from the specimens 'B', analysed in step 2, meet the following requirements at the same time:

.1 no more than 25% of the total number of samples yield results above 2,500 milligrams total tin per kilogram dry paint (2,500 mg Sn/kg of dry paint); and

.2 no sample of the total number of at least eight samples shows a concentration of total tin higher than the sum of threshold value plus the tolerance range, i.e., no sample must exceed the concentration 3,000 mg Sn/kg of dry paint.

Non-compliance at 'step 2-level'

7.7 A positive result in step 2 indicates non-compliance if the provisions of paragraph 7.6 are not met. Such results should be interpreted to mean that organotin compounds are present in the anti-fouling system at a level at which it would act as a biocide.

APPENDIX TO METHOD 1

RECORD SHEET FOR THE BRIEF SAMPLING PROCEDURE FOR COMPLIANCE WITH THE CONVENTION IN TERMS OF THE PRESENCE OF ORGANOTIN ACTING AS A BIOCIDE IN ANTI-FOULING SYSTEMS ON SHIP HULLS

RECORD SHEET : **GUIDELINES FOR BRIEF SAMPLING OF ANTI-FOULING SYSTEMS ON SHIPS - ORGANOTIN -**			***RECORD NUMBER:***
SECTION A: Administration			
1. Country	**2. Name of port**	**3. Date**	
4. Reason for sampling: ☐ Port State control ☐ Survey & Certification ☐ Other flag State compliance inspection			
5. Company details: 1. Name of ship: 2. Distinctive number or letters: 3. Port of registry: 4. Gross tonnage: 5. IMO number:		**6. Inspecting official's details** 1. Name: 2. Comments:	
SECTION B: Sampling			
1. Time sampling procedure initiated:			
2. Description of location from where samples were taken (frame number and distance from boot topping, refer to paragraph 3.2):			
3. Number of samples taken (three specimens per sample): 4. Photographs taken of the sample points prior to sampling? ☐ Yes ☐ No			
5. Time sampling procedure completed:			
6. Additional comments concerning sampling procedure:			

SECTION C: Analysis and results

1. Step 1 total tin analysis:

Company name: ……..

Analyst responsible:…… Date :……

2. Specimen 'A' results: _____ total number of specimens 'A' analysed: _____

No.	mg Sn / kg	No.	mg Sn / kg	No.	mg Sn / kg	No.	mg Sn / kg
1		5		9		13	
2		6		10		14	
3		7		11		15	
4		8		12		16	

Number of specimens exceeding 2,500 mg/kg: _____

1 or more specimens exceeding 3,000 mg/kg: yes ☐ no ☐

Conclusion: Step 2 required ☐

Compliance, Further analysis unnecessary: ☐

3. Additional comments concerning analysis of results from Specimen 'A':

4. Organotin analysis undertaken by:

Company name: ……

Analyst responsible:…… Date :……

5. Specimen 'B' results: _____ total number of specimens 'B' analyzed: _____

No.	organotin (mg / kg) as Sn	No.	organotin (mg / kg) as Sn	No.	organotin (mg / kg) as Sn	No.	organotin (mg / kg) as Sn
1		5		9		13	
2		6		10		14	
3		7		11		15	
4		8		12		16	

Number of specimens exceeding 2,500 mg/kg: _____

1 or more specimens exceeding 3,000 mg/kg: yes ☐ no ☐

Conclusion: Non-compliance assumed ☐

Compliance assumed ☐

6. Additional comments concerning analysis of results from Specimens 'B':

7. Summarized conclusion:

Compliance assumed ☐

Non-compliance assumed ☐

THIS IS TO CERTIFY that this Record is correct in all respects.

Issued at …….
(Place of issue of Record)

……..……
(Date of issue) (Printed name and signature of authorized official issuing the Record)

(Seal or stamp of the authority /organization)

METHOD 2

1 Purpose of this method

1.1 This method provides sampling and analysis procedures to identify the presence of organotin compounds in the anti-fouling systems on ships. The method is designed such that the sampling and the first stage analysis could be carried out by ship surveyors or port State control officers (PSCOs) on the survey/inspection site, e.g. at a dry dock.

1.2 This method is based on a two-stage analysis. The first stage detects total tin as an indicator for the presence of organotin and the second stage is necessary only in the case that the first stage analysis providing a positive result to detect specific organotin compounds.

2 Sampling

2.1 The sampling is carried out by using abrasive paper rubbing on the surface of the anti-fouling system. This results in collection of paint fragment of the anti-fouling system from thin area, less than several micrometer in depth from the surface, which do not affect the coatings lying underneath such as sealers.

2.2 Abrasive paper is pasted on a disc of approximately 10 mm in diameter. Rubbing the surface of the anti-fouling system with the disc collects several milligrams of the sample on to the abrasive paper.

2.3 The sampling device consists of an electric motor, two (or three) rotating rods on each of which a disc is attached, and a battery for electric power supply. The discs are pressed on to the surface of ship's hull by spring coils. The disks rotate counter-clockwise while the rods turn clockwise around the centre of the device. Schematic diagram is illustrated in figure 1.

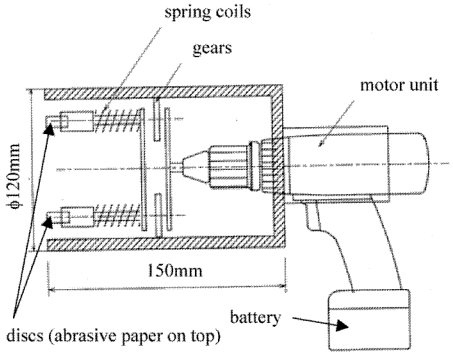

Figure 1. Schematic diagram of sampling device

2.4 Sampling point is selected such that the anti-fouling system is intact over an area of approximately 50 cm x 50 cm or more. At each sampling point, three sets of sampling, or more if necessary, should be carried out to obtain at least six specimens.

2.5 The device is pressed on the ship's hull where it is appropriate to be sampled and held by hand. The electric motor is switched on to slide along the painted surface to lightly scrape off the fragments of the paint onto the abrasive paper. After the sample collection, each disc is removed from the device and stored in an inert container.

2.6 Sampling should normally be carried out with the sampling device. However, in the case that accessibility to the sampling point is poor, it is acceptable to collect samples with the discs by hand if necessary.

3 The first-stage analysis

3.1 The first-stage analysis is assumed to be carried out on the spot of the survey or inspection, e.g. dry docks and sea ports. In order to accomplish the on-site analysis, X-ray fluorescence analysis (XRF) is used in this method to detect total tin content.

3.2 Analytical characteristics, such as detection limit and accuracy, are highly dependent on the type of the instrument, i.e. type of X-ray tube, spectrometer, optical arrangement (filters or collimators), etc. Among several types of the XRF instruments, an energy-dispersive spectrometer with a silicon drift detector (SDD), which is compact in size and be able to be operated without liquid nitrogen, is preferable to the present analytical system for a field use, whereas wave-length dispersion system or solid-state detector are also available if the analysis carried out at laboratories.

3.3 Software customized for the tin analysis is prepared to assist the operator, who is assumed to be a ship surveyor or PSCO, to detect total tin in the specimens.

3.4 The customized software may in advance need a calibration curve of the characteristic X-ray intensity of tin in relation to the tin content particularly in the range of 0.1 to 0.5%.

3.5 After the preparation including the warming-up of the XRF instrument and starting-up of the computer, a specimen (sampling disc) is placed on the sample stage of the instrument. Afterwards, analysis is executed by the customized software. A single batch of analysis for one specimen normally takes 5 minutes and the result is shown on a display automatically.

3.6 Since the XRF analysis does not affect any properties of the specimens, all of the collected specimens (six to nine specimens), including those for the second analysis and storage, are able to be used for this analysis.

4 Interpretation of the result at the first-stage analysis

4.1 Following the procedures above, XRF data of six, or nine, specimens are obtained for each sampling point. Omitting the maximum and minimum values from the data, an average of the tin content is calculated from the intermediate values for the representing value of the sampling point.

4.2 Compliance with the Convention is assumed when none of the tin contents (average values) from the samples do not exceed the sum of the threshold (2,500 mg per kg) and a tolerance (500 mg per kg).

4.3 When one or more average values of samples from different sampling points do not meet the above criteria, the samples should be sent to a laboratory for the second stage analysis. Regardless of the results, it is also possible to undergo the second stage analysis when the surveyor or PSCO considers that it is necessary to do so.

5 Second-stage analysis

5.1 Since the second-stage analysis provides the final and definitive results of the samples, the method should be thoroughly reviewed by experts based on scientific evidence. The following is a brief summary of a tentative methodology for the second stage analysis.

5.2 The collected paint specimens are removed from the abrasive paper and total mass is measured with an electronic balance to an order of 0.1 mg. The specimens are hydrolysed with sodium hydroxide aqueous solution, extracted with organic solvent, and then derivatised with propylmagnesium bromide. After cleaning up the extract, analysis using high resolution gas chromatography/mass spectrometry (GC/MS) is carried out. For quantification analysis, tetrabutyl tin d36 is added as the internal standard.

5.3 These analyses provide the data of chemical species and their content (mg per kg of the specimens). The content of organotin is obtained in a unit of mg per kg of dry paint.

6 Compliance with the Convention

6.1 Compliance with the Convention is assumed when the results from the second-stage analysis meet the following requirements at the same time:

.1 no more than 25% of the total number of samples yield results above 2,500 milligrams tin as organic form per kilogram dry paint (2,500 mg Sn/kg of dry paint); and

.2 no sample of the total number of specimens shows a concentration of tin as organic form higher than the sum of the threshold value plus the tolerance range, i.e., no sample must exceed the concentration 3,000 mg Sn/kg dry paint.

6.2 When the result does not meet the above criteria, it is interpreted to mean that organotin compounds are present in the anti-fouling system at a level where they would act as a biocide.

APPENDIX TO METHOD 2

Record Sheet for the Sampling and Analysis of Anti-Fouling Systems on Ship Hulls - Organotin Compounds

		Record Number
Section A: Administration		
1. Country		2. Location
3. Date		
4. Reason for Survey/Inspection		
5. Details of the Ship		
	5.1 Name of Ship	
	5.2 Distinctive Number or Letters	
	5.3 Gross Tonnage	5.4 Year of Built
	5.5 Owner or Operator of Ship	
	5.6 Flag State	5.7 Class of Ship
	5.8 Authority of AFS Certificate	
	5.9 Date of Issue	
	5.10 Date of Last Endorsement	
	5.11 IMO Number	
	5.12 Name of Shipmaster	
	5.13 Product Name of Anti-Fouling System	
	5.14 Name of Manufacturer	
	5.15 Name of Shipyard where applied	
	5.16 Comments	
6. Inspecting Official's Details		
	6.1 Name	
	6.2 Comments	

	Record Number
Section B: Sampling and Stage I Analysis (X-ray Fluorescence Analysis)	
Date	Instrument I.D.

Sample/Location	Specimen I.D.	Sampling Disc	Content of Tin (mg/kg)	max	min	Average
A	A1	☐abrasives		☐	☐	
	A2	☐metal		☐	☐	
	A3	☐others		☐	☐	Average
	A4	☐abrasives		☐	☐	
	A5	☐metal		☐	☐	_____ mg/kg
	A6	☐others		☐	☐	☐>2,500mg/kg
	A7	☐abrasives		☐	☐	☐>3,000mg/kg
	A8	☐metal		☐	☐	
	A9	☐others		☐	☐	
B	B1	☐abrasives		☐	☐	
	B2	☐metal		☐	☐	
	B3	☐others		☐	☐	Average
	B4	☐abrasives		☐	☐	
	B5	☐metal		☐	☐	_____ mg/kg
	B6	☐others		☐	☐	☐>2,500mg/kg
	B7	☐abrasives		☐	☐	☐>3,000mg/kg
	B8	☐metal		☐	☐	
	B9	☐others		☐	☐	
C	C1	☐abrasives		☐	☐	
	C2	☐metal		☐	☐	
	C3	☐others		☐	☐	Average
	C4	☐abrasives		☐	☐	
	C5	☐metal		☐	☐	_____ mg/kg
	C6	☐others		☐	☐	☐>2,500mg/kg
	C7	☐abrasives		☐	☐	☐>3,000mg/kg
	C8	☐metal		☐	☐	
	C9	☐others		☐	☐	
D	D1	☐abrasives		☐	☐	
	D2	☐metal		☐	☐	
	D3	☐others		☐	☐	Average
	D4	☐abrasives		☐	☐	
	D5	☐metal		☐	☐	_____ mg/kg
	D6	☐others		☐	☐	☐>2,500mg/kg
	D7	☐abrasives		☐	☐	☐>3,000mg/kg
	D8	☐metal		☐	☐	
	D9	☐others		☐	☐	

☐Stage II required	☐ ___ samples out of ___ are above 2,500mg/kg ☐ Sample ___ is above 3,000mg/kg	☐Compliant
Sampled by	Analyzed by	
Signature	Signature	

Record Number

Section C: Stage II Analysis (Gas Chromatograph Mass Spectrometry)

Date

Instrument I.D.

Comments on the Method

Sample I.D.	Specimen Used	Content of Tin (XRF analysis) (mg/kg)	Content of Tin (as organotin) (mg/kg)	Compliance
A				☐>2,500mg/kg ☐>3,000mg/kg
B				☐>2,500mg/kg ☐>3,000mg/kg
C				☐>2,500mg/kg ☐>3,000mg/kg
D				☐>2,500mg/kg ☐>3,000mg/kg

4. Conclusion

☐Not Compliant ____ samples out of __ are above 2,500mg(Sn)/kg(dry paint).
Sample(s) __ is (are) above 3,000mg(Sn)/kg(dry paint).

☐Compliant

5. Additional Comments

6. Laboratory Name

7. Analyzed by | 8. Signature

Section D: Final Conclusion

1. Conclusion

☐Anti-fouling system is compliant with the AFS Convention 2001.

☐Anti-fouling system is NOT compliant with the AFS Convention 2001.

2. Comments

3. Processed Official

3.1 Name _____ 3.2 Date _____

3.3 Signature

4. Authorized Administrator

4.1 Name _____ 4.2 Date _____

4.3 Signature

***

ANNEX 10

RESOLUTION MEPC.105(49)

Adopted on 18 July 2003

GUIDELINES FOR INSPECTION OF ANTI-FOULING SYSTEMS ON SHIPS

THE MARINE ENVIRONMENT PROTECTION COMMITTEE,

RECALLING Article 38(a) of the Convention on the International Maritime Organization concerning the functions of the Marine Environment Protection Committee conferred upon it by the international conventions for the prevention and control of marine pollution,

RECALLING ALSO that the International Conference on the Control of Harmful Anti-fouling Systems for Ships, 2001, held in October 2001, adopted the International Convention on the Control of Harmful Anti-fouling Systems on Ships, 2001 (the AFS Convention) together with four Conference resolutions,

RECALLING FURTHER that Article 11 of the AFS Convention prescribes that ships to which this Convention applies may, in any port, shipyard, or offshore terminal of a Party, be inspected by officers authorized by that Party for the purpose of determining whether the ship is in compliance with this Convention,

NOTING that Article 3(3) of the AFS Convention prescribes that Parties to this Convention shall apply the requirements of this Convention as may be necessary to ensure that no more favourable treatment is given to ships of non-Parties to this Convention,

NOTING ALSO that Article 11(2) of the AFS Convention refers to the guidelines to be developed by the Organization and Conference resolution 2 urges the Organization to develop these guidelines as a matter of urgency for them to be adopted before the entry into force of the Convention,

NOTING FURTHER that through resolutions MEPC.102(48) and MEPC.104(49) the Organization has developed "Guidelines for Survey and Certification of Anti-fouling Systems on Ships" and "Guidelines for Brief Sampling of Anti-Fouling Systems on Ships", respectively, and

HAVING CONSIDERED the draft Guidelines for inspection of anti-fouling systems on ships pursuant to the International Convention on the Control of Harmful Anti-fouling Systems on Ships, 2001, prepared by the Sub-Committee on Flag State Implementation at its eleventh session,

1. ADOPTS the Guidelines for inspection of anti-fouling systems on ships pursuant to the International Convention on the Control of Harmful Anti-fouling Systems on Ships, 2001, as set out in the Annex to this resolution;

2. INVITES Governments to apply the Guidelines as soon as possible, or when the Convention becomes applicable to them; and

3. RECOMMENDS that the Guidelines be adopted as amendments to resolution A.787(19) on Procedures for port State control, as further amended by resolution A.882(21) once the AFS Convention has entered into force and that the Guidelines be reviewed on a regular basis.

ANNEX

GUIDELINES FOR INSPECTION OF ANTI-FOULING SYSTEMS ON SHIPS

PART 1

Port State control inspections of anti-fouling systems on ships are governed by Article 11 of the AFS Convention. The process for conducting these inspections is described below. The flow diagram in the Appendix to this annex also describes the AFS port State inspection process.

SUB-PART 1

INSPECTION OF INTERNATIONAL ANTI-FOULING SYSTEM (IAFS) CERTIFICATE OR DECLARATION ON ANTI-FOULING SYSTEM

1 Ships required to carry an IAFS Certificate or Declaration on Anti-Fouling System

.1 On boarding and introduction to the master or responsible ship's officer, the port State control officer (PSCO) should examine the IAFS Certificate or Declaration on Anti-Fouling System, and the attached Record of Anti-Fouling Systems, if appropriate.

.2 The IAFS Certificate carries the information on the particulars of the ship and a series of checkboxes to indicate if an anti-fouling system controlled under Annex I of AFS 2001 has or has not been applied, removed or been covered with a sealer coat, and if an anti-fouling system controlled under Annex I of AFS 2001 was applied on the ship prior to or after the date specified in AFS 2001.

.3 As a preliminary check, the validity of the IAFS Certificate should be confirmed by verifying that the IAFS Certificate is properly completed and signed/endorsed by the Administration, or by a recognized organization (RO) and stating that the required survey has been performed. In reviewing the IAFS Certificate, particular attention should be given to verifying that the initial survey matches the dry dock period listed in the ship's log(s) and that only one box should be marked.

.4 The Record of Anti-Fouling Systems should be inspected to ensure that the records are attached to the IAFS Certificate and are up to date. The most recent Record must correlate with the correct checkbox on the front of the IAFS Certificate.

2 Ships of Non-Parties to AFS 2001

.1 As ships of non-Parties to AFS 2001 are not entitled to an IAFS Certificate, the PSCO should look for documentation that contains all of the information in the IAFS Certificate. The records described in resolution MEPC.102(48), paragraphs 5.2.2 and 5.3.2 can be used as examples of this types of documentation. If the ship has such documentation, the PSCO may take its content into account in the evaluation of that ship's compliance.

.2 In all other respects the PSCO should be guided by the procedures for ships referred to in paragraph 1 above (Ships required to carry an IAFS Certificate).

SUB-PART 2

BRIEF SAMPLING OF ANTI-FOULING SYSTEMS ON SHIPS

1 In addition to reviewing the IAFS Certificate, the AFS 2001 specifies that the inspection may also include a brief sampling of the ship's anti-fouling system. The sampling must not affect the integrity, structure, or operation of the anti-fouling system, taking into account the guidelines contained in resolution MEPC.104(49).

2 If a brief sampling is conducted, the time to process the results shall not be used as a basis for preventing the movement and departure of the ship.

PART 2

MORE THOROUGH INSPECTION

1 If the results of the inspection, observations on board, or other information leads to clear grounds for believing that the ship is in violation of the AFS 2001, or if the anti-fouling system does not correspond substantially with the particulars of the IAFS Certificate, a more thorough inspection may be carried out taking into account any of the following steps.

2 Inspection of additional documentation, to include:

.1 ship's logs, including entries regarding:

.1 date of last repair, drydock or application of anti-fouling system, date of departure from location;

.2 current port and date of arrival; and

.3 ship's position at or near the time the boarding took place; and

.2 inspection of additional documentation described in paragraphs 5.2.2 and 5.2.3 of resolution MEPC.102(48).

3 If appropriate, spot check dates of last hull coating matches date in drydock?

4 If the IAFS Certificate is not properly completed, information on the following questions may be pertinent:

.1 "When was the last time the ship's anti-fouling system was applied?";

.2 "If the anti-fouling system is controlled under Annex 1 to AFS 2001 and was removed, what was the name of the facility and date of the work performed?";

.3 "If the anti-fouling system is controlled under Annex 1 of AFS 2001 and has been covered by a sealer coat, what was the name of the facility and date applied?";

.4 "What is the name of the anti-fouling/sealer products and the manufacturer or distributor for the existing anti-fouling system?"; and

.5 "If the current anti-fouling system was changed from the previous system, what was the type of anti-fouling system and name of the previous manufacturer or distributor?".

5 Performing additional verification, for example, more comprehensive sampling and analysis of the ship's anti-fouling system. Such sampling and analysis will likely be more detailed and comprehensive than the brief inspection that may be carried out during the initial port State control inspection, and may involve the use of laboratories and detailed scientific testing procedures. Refer to the guidelines in resolution MEPC.104(49) when conducting these additional samples or analyses.

6 Additional information available to the PSCO, depending on the circumstances of the case, such as reports of recent previous violations or alleged contraventions received from other port States.

PART 3

PORT STATE ACTION IN RESPONSE TO ALLEGED CONTRAVENTIONS

1 Article 11(4) of AFS 2001 allows Parties to inspect ships on request of another Party, if a request for an investigation is received and sufficient evidence that the ship is operating or has operated in violation of the Convention is provided. Article 12(2) permits port States conducting inspection to furnish the Administration of the ship concerned such information and evidence as may be in its possession that a violation has occurred. Experience has shown that information furnished to the flag State is often inadequate to enable the flag State to cause proceedings to be brought in respect of the alleged violation of the AFS 2001 requirements. This part is intended to identify information which is often needed by a flag State for the prosecution of such possible violations.

2 It is recommended that in preparing a port State report on deficiencies, where contravention to AFS 2001 requirements is involved, the authorities of the coastal or port State be guided by the itemized list of possible evidence as shown in part 2. It should be borne in mind in this connection that:

.1 the report aims to provide the optimal collation of obtainable data; however, even if all the information cannot be provided, as much information as possible should be submitted; and

.2 it is important for all the information included in the report to be supported by facts which, when considered as a whole, would lead the port or coastal State to believe a contravention had occurred.

3 In addition to the port State report on deficiencies, a report should be completed by a port or coastal State, on the basis of the itemized list of possible evidence. It is important that these reports are supplemented by documents such as:

.1 a statement by the PSCO of the suspected non-conforming anti-fouling system. In addition to the information required in part 2, the statement should include considerations which lead the PSCO to carry out a more detailed inspection;

.2 statements concerning any sampling procedures of the anti-fouling system. These should include: location of the vessel at the time it was sampled as well as an

indication of where the sample was taken from the hull, including the vertical distance from the boot topping, the time of sampling, identity of person(s) taking the samples, and receipts identifying the persons having custody and receiving transfer of the samples;

.3 reports of analyses of any samples taken of the anti-fouling system; the reports should include the results of the analyses, a description of the method employed, reference to or copies of scientific documentation attesting to the accuracy and validity of the method employed, the names of persons performing the analyses and their experience and a description of the quality assurance measures of the analyses;

.4 a statement by the PSCO on board together with the PSCO's rank and organization;

.5 statements by persons being questioned;

.6 statements by witnesses;

.7 photographs of the hull and sample areas; and

.8 copy of the IAFS Certificate, including copies of relevant pages of the Record of Anti-fouling Systems, log books, MSDS or similar, declaration of compliance from the anti-fouling system manufacturer, invoices from the shipyard and other dry dock records pertaining to the anti-fouling system, etc.

4 All observations, photographs and documentation should be supported by a signed verification of their authenticity. All certifications, authentications or verifications should be executed in accordance with the laws of the State which prepares them. All statements should be signed and dated by the person making the statement. The names of the persons signing statements should be printed in legible script above or below the signature.

5 The reports referred to under paragraphs 2 and 3 of this part should be sent to the flag State. If the coastal State observing the contravention and the port State carrying out the investigation on board are not the same, the State carrying out the latter investigation should also send a copy of its findings to the State which initiated the investigation.

PART 4

RESPONSIBILITIES OF PORT STATE TO NOTIFY THE CONTRAVENTION TO THE FLAG STATE

1 Article 11(3) of AFS 2001 states that any time a ship is warned or detained, or is dismissed or excluded from a port for violation of the Convention, the Party taking such action shall immediately inform the flag Administration of the ship concerned. The form in Appendix 5 should be used to inform the flag Administration. In the event that the deficiencies identified by the PSCO cannot be corrected in the port of inspection and the ship is allowed to sail from that port, the guidance in paragraph 4.7.3 and the forms in Appendices 6 and 7 should be used.

APPENDIX

AFS port State inspection process

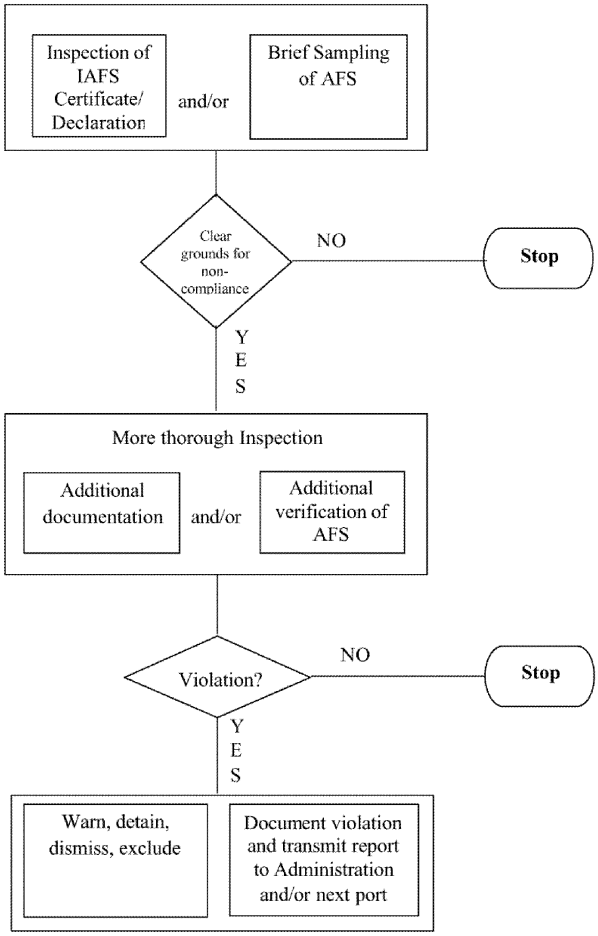

***

○