5–26–95
Vol. 60 No. 102
Pages 27867–28026

federal register

Friday
May 26, 1995

Briefings on How To Use the Federal Register
For information on briefings in Washington, DC and Boston, MA see announcement on the inside cover of this issue.

FEDERAL REGISTER Published daily, Monday through Friday, (not published on Saturdays, Sundays, or on official holidays), by the Office of the Federal Register, National Archives and Records Administration, Washington, DC 20408, under the Federal Register Act (49 Stat. 500, as amended; 44 U.S.C. Ch. 15) and the regulations of the Administrative Committee of the Federal Register (1 CFR Ch. I). Distribution is made only by the Superintendent of Documents, U.S. Government Printing Office, Washington, DC 20402.

The **Federal Register** provides a uniform system for making available to the public regulations and legal notices issued by Federal agencies. These include Presidential proclamations and Executive Orders and Federal agency documents having general applicability and legal effect, documents required to be published by act of Congress and other Federal agency documents of public interest. Documents are on file for public inspection in the Office of the Federal Register the day before they are published, unless earlier filing is requested by the issuing agency.

The seal of the National Archives and Records Administration authenticates this issue of the **Federal Register** as the official serial publication established under the Federal Register Act. 44 U.S.C. 1507 provides that the contents of the **Federal Register** shall be judicially noticed.

The **Federal Register** is published in paper, 24x microfiche and as an online database through *GPO Access*, a service of the U.S. Government Printing Office. The online database is updated by 6 a.m. each day the **Federal Register** is published. The database includes both text and graphics from Volume 59, Number 1 (January 2, 1994) forward. It is available on a Wide Area Information Server (WAIS) through the Internet and via asynchronous dial-in. The annual subscription fee for a single workstation is $375. Six-month subscriptions are available for $200 and one month of access can be purchased for $35. Discounts are available for multiple-workstation subscriptions. To subscribe, Internet users should telnet to swais.access.gpo.gov and login as newuser (all lower case); no password is required. Dial-in users should use communications software and modem to call (202) 512–1661 and login as swais (all lower case); no password is required; at the second login prompt, login as newuser (all lower case); no password is required. Follow the instructions on the screen to register for a subscription for the **Federal Register** Online via *GPO Access.* For assistance, contact the *GPO Access* User Support Team by sending Internet e-mail to help@eids05.eids.gpo.gov, or a fax to (202) 512–1262, or by calling (202) 512–1530 between 7 a.m. and 5 p.m. Eastern time, Monday through Friday, except Federal holidays.

The annual subscription price for the **Federal Register** paper edition is $494, or $544 for a combined **Federal Register**, Federal Register Index and List of CFR Sections Affected (LSA) subscription; the microfiche edition of the **Federal Register** including the Federal Register Index and LSA is $433. Six month subscriptions are available for one-half the annual rate. The charge for individual copies in paper form is $8.00 for each issue, or $8.00 for each group of pages as actually bound; or $1.50 for each issue in microfiche form. All prices include regular domestic postage and handling. International customers please add 25% for foreign handling. Remit check or money order, made payable to the Superintendent of Documents, or charge to your GPO Deposit Account, VISA or MasterCard. Mail to: New Orders, Superintendent of Documents, P.O. Box 371954, Pittsburgh, PA 15250–7954.

There are no restrictions on the republication of material appearing in the **Federal Register.**

How To Cite This Publication: Use the volume number and the page number. Example: 60 FR 12345.

SUBSCRIPTIONS AND COPIES

PUBLIC

Subscriptions:

Paper or fiche	**202–512–1800**
Assistance with public subscriptions	**512–1806**

Online:

Telnet swais.access.gpo.gov, login as newuser <enter>, no password <enter>; or use a modem to call (202) 512–1661, login as swais, no password <enter>, at the second login as newuser <enter>, no password <enter>.

Assistance with online subscriptions	**202–512–1530**

Single copies/back copies:

Paper or fiche	**512–1800**
Assistance with public single copies	**512–1803**

FEDERAL AGENCIES

Subscriptions:

Paper or fiche	**523–5243**
Assistance with Federal agency subscriptions	**523–5243**

For other telephone numbers, see the Reader Aids section at the end of this issue.

THE FEDERAL REGISTER

WHAT IT IS AND HOW TO USE IT

FOR: Any person who uses the Federal Register and Code of Federal Regulations.

WHO: The Office of the Federal Register.

WHAT: Free public briefings (approximately 3 hours) to present:

1. The regulatory process, with a focus on the Federal Register system and the public's role in the development of regulations.
2. The relationship between the Federal Register and Code of Federal Regulations.
3. The important elements of typical Federal Register documents.
4. An introduction to the finding aids of the FR/CFR system.

WHY: To provide the public with access to information necessary to research Federal agency regulations which directly affect them. There will be no discussion of specific agency regulations.

WASHINGTON, DC

WHEN: June 28 at 9:00 am

WHERE: Office of the Federal Register Conference Room, 800 North Capitol Street NW., Washington, DC (3 blocks north of Union Station Metro)

RESERVATIONS: 202–523–4538

BOSTON, MA

WHEN: June 20 at 9:00 am

WHERE: Room 419, Barnes Federal Building 495 Summer Street, Boston, MA

RESERVATIONS: Call the Federal Information Center 1–800–347–1997

Printed on recycled paper containing 100% post consumer waste

Contents

Federal Register

Vol. 60, No. 102

Friday, May 26, 1995

Agricultural Marketing Service
PROPOSED RULES
Tobacco inspection:
Flue-cured tobacco, 27912–27913

Agriculture Department
See Agricultural Marketing Service
See Animal and Plant Health Inspection Service
See Commodity Credit Corporation
See Consolidated Farm Service Agency
See Cooperative State Research, Education, and Extension Service
See Grain Inspection, Packers and Stockyards Administration

Animal and Plant Health Inspection Service
PROPOSED RULES
Import and export user fees, 27913–27924

Blind or Severely Disabled, Committee for Purchase From People Who Are
See Committee for Purchase From People Who Are Blind or Severely Disabled

Centers for Disease Control and Prevention
NOTICES
Grants and cooperative agreements; availability, etc.:
State health promotion and chronic disease prevention databases/clearinghouses development, 27978–27980

Coast Guard
RULES
Ports and waterways safety:
Ohio River, OH; safety zone, 27887–27888
Tennessee River, KY; safety zone, 27888–27889
Regattas and marine parades:
Geneva Offshore Grand Prix, 27886–27887
Harvard-Yale Regatta, 27885–27886
PROPOSED RULES
Regattas and marine parades:
Connecticut River Raft Race, 27933–27934
NOTICES
Meetings:
Merchant Marine Personnel Advisory Committee, 28009

Commerce Department
See Export Administration Bureau
See Foreign-Trade Zones Board
See International Trade Administration
See Minority Business Development Agency
See National Institute of Standards and Technology
See National Oceanic and Atmospheric Administration
See Patent and Trademark Office

Committee for Purchase From People Who Are Blind or Severely Disabled
NOTICES
Procurement list; additions and deletions, 27967–27968

Committee for the Implementation of Textile Agreements
NOTICES
Cotton, wool, and man-made textiles:
Hong Kong; correction, 27965
Macau, 27965–27966
Malaysia, 27966
Thailand, 27966–27967

Commodity Credit Corporation
RULES
Loan and purchase programs:
Price support levels—
Peanuts, 27868–27870
Tobacco, 27867–27868

Commodity Futures Trading Commission
NOTICES
Contract market proposals:
Coffee, Sugar & Cocoa Exchange—
Milk, 27968–27969

Consolidated Farm Service Agency
RULES
Loan and purchase programs:
Price support levels—
Tobacco, 27867–27868

Cooperative State Research, Education, and Extension Service
NOTICES
Grants and cooperative agreements; availability, etc.:
Small business innovation research program, 28026

Copyright Office, Library of Congress
RULES
Digital audio recording devices and media; access to and confidentiality of statements of account and verification audit filings
Correction, 28019

Employment Standards Administration
NOTICES
Minimum wages for Federal and federally-assisted construction; general wage determination decisions, 27990–27991

Energy Department
See Federal Energy Regulatory Commission
NOTICES
Meetings:
Environmental Management Site Specific Advisory Board—
Hanford Site, 27969

Environmental Protection Agency
RULES
Air quality implementation plans; approval and promulgation; various States:
District of Columbia, 27889–27891
Idaho, 27891–27893
Pennsylvania, 27893–27896
Superfund program:
National oil and hazardous substances contingency plan—
National priorities list update, 27896–27898

PROPOSED RULES
Air quality implementation plans; approval and promulgation; various States:
District of Columbia, 27944
Idaho, 27944–27945
Pennsylvania, 27945
Clean Air Act:
Enhanced monitoring program
Public meeting, 27943–27944
Federal operating permits program, 27945
NOTICES
Environmental statements; availability, etc.:
Agency statements—
Comment availability, 27974–27975
Weekly receipts, 27975
Meetings:
State FIFRA Issues Research and Evaluation Group, 27975–27976

Export Administration Bureau
NOTICES
Meetings:
President's Export Council, 27956

Federal Aviation Administration
RULES
Airworthiness directives:
Bell, 27873–27874
Hartzell Propeller Inc., 27871–27873
Class D airspace, 27874–27875
Class E airspace, 27875–27878
PROPOSED RULES
Airworthiness directives:
Robinson Helicopter Co., 27926–27932
NOTICES
Exemption petitions; summary and disposition, 28010–28011

Federal Communications Commission
RULES
Radio stations; table of assignments:
Louisiana, 27899
PROPOSED RULES
Common carrier services:
Hearing Aid Compatibility Negotiated Rulemaking Committee—
Meetings, 27945–27946

Federal Deposit Insurance Corporation
NOTICES
Collateralized letters of credit; treatment after FDIC appointment as conservator or receiver; policy statement, 27976–27977

Federal Emergency Management Agency
NOTICES
Hotel and Motel Fire Safety Act; national master list, 28022–28024

Federal Energy Regulatory Commission
RULES
Electric utilities (Federal Power Act):
Federal regulatory review
Correction, 27882
Transmission services provided by public utilities; pricing policy statement, 27878–27882
NOTICES
Electric rate and corporate regulation filings:
CNG Power Services Corp. et al., 27970–27973
Environmental statements; availability, etc.:
Alaska Power & Telephone Co., 27973–27974
Applications, hearings, determinations, etc.:
Hamilton, OH, 27970
Pacific Gas Transmission Co., 27969
Tennessee Gas Pipeline Co., 27969–27970

Federal Railroad Administration
RULES
Railroad locomotive safety standards:
Event recorders, 27900–27906
NOTICES
Exemption petitions, etc.:
National Railroad Passenger Corp. (Amtrak), 28011–28013

Federal Reserve System
NOTICES
Applications, hearings, determinations, etc.:
Bank of New York Co., Inc., 27978
Corliss, Michael J., 27977–27978
Farmers & Merchants Bank Employee Stock Ownership Plan, 27977
MBNA Corp., 27978
Union Planters Corp. et al., 27977

Federal Retirement Thrift Investment Board
PROPOSED RULES
Thrift savings plan:
Investment funds; participant choices, 27908–27912

Fish and Wildlife Service
PROPOSED RULES
Endangered and threatened species:
Findings on petitions, etc.—
Wood turtle, 27954–27955
NOTICES
Endangered and threatened species permit applications, 27987

Food and Drug Administration
NOTICES
Compliance policy guides; revocation, 27980–27981
Human drugs:
Patent extension; regulatory review period determinations—
FRAGMIN, 27981
Neurolite, 27982
Medical devices; premarket approval:
Atakr Radio Frequency Catheter Ablation System; correction, 28019

Foreign-Trade Zones Board
NOTICES
Applications, hearings, determinations, etc.:
Illinois
Marathon Oil Co.; oil refinery, 27956–27957

Grain Inspection, Packers and Stockyards Administration
NOTICES
Stockyards; posting and deposting:
Reel Livestock Center, Inc., IL; correction, 27956

Health and Human Services Department
See Centers for Disease Control and Prevention
See Food and Drug Administration
See Health Resources and Services Administration
See Public Health Service

Health Resources and Services Administration
NOTICES
National practitioner data bank:
Fee payment method change, 27982–27983

Housing and Urban Development Department
NOTICES
Grant and cooperative agreement awards:
Low income housing—
Preservation outreach and training and other activities, 27984
Grants and cooperative agreements; availability, etc.:
Facilities to assist homeless—
Excess and surplus Federal property, 27984–27985

Interior Department
See Fish and Wildlife Service
See Land Management Bureau
See National Park Service

International Trade Administration
NOTICES
Antidumping:
Ferrovanadium and nitrided vanadium from—
Russian Federation, 27957–27963
Countervailing duty orders:
Injury investigations; domestic interested parties right to request, 27963–27964

International Trade Commission
NOTICES
Meetings; Sunshine Act, 28018

Interstate Commerce Commission
NOTICES
Motor carriers:
Compensated intercorporate hauling operations, 27988–27989
Railroad operation, acquisition, construction, etc.:
Eastern Idaho Railroad, Inc., 27989
Railroad services abandonment:
Boston & Maine Corp., 27989–27990
CSX Transportation, Inc., 27989

Justice Department
PROPOSED RULES
Privacy Act; implementation, 27933
NOTICES
Pollution control; consent judgments:
Broderick Investment Co. et al., 27990
Privacy Act:
Systems of records, 27990

Labor Department
See Employment Standards Administration
NOTICES
Meetings:
Excellence in State and Local Government through Labor-Management Cooperation Task Force, 27991–27992

Land Management Bureau
NOTICES
Alaska Native claims selection:
Cape Fox Corp., 27985
Realty actions; sales, leases, etc.:
Arizona, 27985–27986
Wyoming, 27986–27987
Recreation management restrictions, etc.:
Anchorage District, AK; dog mushing wheeled carts or vehicles, limited use, 27987

Library of Congress
See Copyright Office, Library of Congress

Minority Business Development Agency
NOTICES
Business development center program applications:
South Carolina, 27964–27965

National Institute of Standards and Technology
NOTICES
Patent licenses; non-exclusive, exclusive, or partially exclusive:
American Dental Association Health Foundation, 27965

National Oceanic and Atmospheric Administration
RULES
Fishery conservation and management:
Summer flounder, 27906–27907
NOTICES
Meetings:
Atlantic States Marine Fisheries Commission coastal fisheries management plans, 27965

National Park Service
NOTICES
Concession contract negotiations:
Presidio of San Francisco, CA—
Gymnasiums and swimming pool, 27987–27988
Meetings:
Denali National Park Subsistence Resource Commission, 27988
Pea Ridge National Military Park Advisory Team, 27988
San Francisco Maritime National Historical Park Advisory Commission, 27988

Nuclear Regulatory Commission
NOTICES
Environmental statements; availability, etc.:
Duquesne Light Co. et al., 27992–27993
Generic letters:
Reactor vessel structural integrity, 27993
Reports; availability, etc.:
Licensed uranium recovery facilities, effluent disposal at; staff technical position, 27993–27994

Patent and Trademark Office
PROPOSED RULES
Patent and trademark cases:
Fee revisions, 27934–27943

Personnel Management Office
RULES
Health benefits, Federal employees:
Inpatient hospital charges, physician charges, and FEHB benefit payments; limitations
Correction, 28019
NOTICES
Meetings:
National Partnership Council, 27994

Postal Rate Commission
NOTICES
Meetings; Sunshine Act, 28018

Postal Service
NOTICES
Meetings; Sunshine Act, 28018

Public Health Service
See Centers for Disease Control and Prevention
See Food and Drug Administration
See Health Resources and Services Administration
RULES
National practitioner data bank for adverse information on physicians and other health care practitioners:
User fees, 27898–27899
NOTICES
Veterans Health Care Act:
Limitation on prices of drugs purchased by covered entities
New drug pricing, 27983–27984

Research and Special Programs Administration
PROPOSED RULES
Pipeline safety:
Hazardous liquid transportation—
Areas unusually sensitive to environmental damage; workshop, 27948–27954

Secret Service
RULES
Security:
White House perimeter; street closure and vehicular traffic ban, 27882–27885

Securities and Exchange Commission
NOTICES
Securities:
Transactions settlement; Rule 15c6–1 exemption, 27994–27996
Self-regulatory organizations; proposed rule changes:
Chicago Board Options Exchange, Inc., 28003–28007
Chicago Stock Exchange, Inc., 28007–28008
National Association of Securities Dealers, Inc., 27997–28003
Pacific Stock Exchange, Inc., 27996–27997
Philadelphia Stock Exchange, Inc.; correction, 28019
Applications, hearings, determinations, etc.:
Value Line Intermediate Bond Fund; correction, 28019

Small Business Administration
RULES
Certification by recipient of financial assistance that recipient is not delinquent on court order, etc., requiring payment of child support, 27870–27871
PROPOSED RULES
Small business size standards:
Non-manufacturers; provision of manufacturer's product on small business set-aside or section 8(a) contracts, 27924–27926
NOTICES
Disaster loan areas:
Texas, 28009

State Department
NOTICES
Meetings:
Overseas Security Advisory Council, 28009

Textile Agreements Implementation Committee
See Committee for the Implementation of Textile Agreements

Transportation Department
See Coast Guard
See Federal Aviation Administration
See Federal Railroad Administration
See Research and Special Programs Administration
PROPOSED RULES
Privacy Act; implementation, 27946–27948
NOTICES
Aviation proceedings:
Certificates of public convenience and necessity and foreign air carrier permits; weekly applications, 28009–28010

Treasury Department
See Secret Service
NOTICES
Agency information collection activities under OMB review, 28013–28017

United States Information Agency
NOTICES
Art objects; importation for exhibition:
Golden Age of Danish Art: Drawings from the Royal Museum of Fine Arts, Copenhagen, 28017
Mingei: Japanese Folk Art from the Montgomery Collection, 28017

Separate Parts In This Issue

Part II
Federal Emergency Management Agency, 28022–28024

Part III
Department of Agriculture, Cooperative State Research, Education, and Extension Service, 28026

Reader Aids
Additional information, including a list of public laws, telephone numbers, and finding aids, appears in the Reader Aids section at the end of this issue.

Electronic Bulletin Board
Free **Electronic Bulletin Board** service for Public Law numbers, **Federal Register** finding aids, and a list of documents on public inspection is available on 202–275–1538 or 275–0920.

CFR PARTS AFFECTED IN THIS ISSUE

A cumulative list of the parts affected this month can be found in the Reader Aids section at the end of this issue.

5 CFR
890.....28019
Proposed Rules:
1601.....27908

7 CFR
723.....27867
1421.....27868
1464.....27867
Proposed Rules:
29.....27912

9 CFR
Proposed Rules:
130.....27913

13 CFR
116.....27870
Proposed Rules:
121.....27924

14 CFR
39 (2 documents) 27871, 27873
71 (4 documents) 27874, 27875, 27876, 27877
Proposed Rules:
39.....27926

18 CFR
2.....27878
34.....27882

28 CFR
Proposed Rules:
16.....27933

31 CFR
413.....27882

33 CFR
100 (2 documents) 27885, 27886
165 (2 documents) 27887, 27888
Proposed Rules:
100.....27933

37 CFR
201.....28019
Proposed Rules:
1.....27934
2.....27934
7.....27934

40 CFR
52 (3 documents) 27889, 27891, 27893
300.....27896
Proposed Rules:
51.....27943
52 (4 documents) 27943, 27944, 27945
55.....27945
60.....27943
61.....27943
64.....27943
71.....27945

45 CFR
60.....27898

47 CFR
73.....27899
Proposed Rules:
Ch. I.....27945

49 CFR
229.....27900
Proposed Rules:
10.....27946
195.....27948

50 CFR
625.....27906
Proposed Rules:
17.....27954

Rules and Regulations

Federal Register
Vol. 60, No. 102
Friday, May 26, 1995

This section of the FEDERAL REGISTER contains regulatory documents having general applicability and legal effect, most of which are keyed to and codified in the Code of Federal Regulations, which is published under 50 titles pursuant to 44 U.S.C. 1510.

The Code of Federal Regulations is sold by the Superintendent of Documents. Prices of new books are listed in the first FEDERAL REGISTER issue of each week.

DEPARTMENT OF AGRICULTURE

Consolidated Farm Service Agency

7 CFR Part 723

Commodity Credit Corporation

7 CFR Part 1464

RIN 0560–AD63

1995 Marketing Quota and Price Support for Burley Tobacco

AGENCIES: Consolidated Farm Service Agency and Commodity Credit Corporation, USDA.

ACTION: Final rule.

SUMMARY: The purpose of this final rule is to codify determinations made by the Secretary of Agriculture (Secretary) with respect to the 1995 crop of burley tobacco. In accordance with the Agricultural Adjustment Act of 1938, as amended (1938 Act), the Secretary determined the 1995 marketing quota for burley tobacco to be 549.0 million pounds. In accordance with the Agricultural Act of 1949, as amended (the 1949 Act), the Secretary determined the 1995 price support level to be 172.5 cents per pound.

EFFECTIVE DATE: February 1, 1995.

FOR FURTHER INFORMATION CONTACT: Robert Tarczy, CFSA, USDA, room 3739, South Building, PO. Box 2415, Washington, DC 20013–2415, on 202 720–5346.

SUPPLEMENTARY INFORMATION:

Executive Order 12866

This final rule has been determined to be significant for purposes of Executive Order 12866 and, therefore, has been reviewed by OMB under Executive Order 12866.

Federal Assistance Program

The title and number of the Federal Assistance Program, as found in the Catalog of Federal Domestic Assistance, to which this rule applies, are Commodity Loans and Purchases—10.051.

Executive Order 12778

This final rule has been reviewed in accordance with Executive Order 12778, Civil Justice Reform. The provisions of this rule do not preempt State laws, are not retroactive, and do not involve administrative appeals.

Paperwork Reduction Act

The amendments to 7 CFR parts 723 and 1464 set forth in this final rule do not contain any new or revised information collection requirements that require clearance through the Office of Management and Budget under the provisions of 44 U.S.C. chapter 35.

Regulatory Flexibility Act

It has been determined that the Regulatory Flexibility Act is not applicable to this final rule because CFSA is not required by 5 U.S.C. 553 or any other provision of law to publish a notice of proposed rulemaking with respect to the subject matter of this rule.

Proclamation

On February 1, 1995, the Secretary proclaimed the national marketing quota and announced price support level for the 1995 crop of burley tobacco. The Secretary also announced that a referendum would be conducted by mail ballot with respect to burley tobacco.

During February 27–March 2, 1995, eligible burley tobacco producers voted in a referendum to determine whether such producers disapprove marketing quotas for the 1995, 1996, and 1997 marketing years (MY's) for this kind of tobacco. Of the producers voting, 96.8 percent favored marketing quotas for burley tobacco. Accordingly, quotas and price support are in effect for the 1995 MY.

Marketing Quota

Section 319(c)(3)(A)(B) of the 1938 Act provides, in part, that the national marketing quota for a marketing year for burley tobacco is the quantity of such tobacco that is not more than 103 percent nor less than 97 percent of the total of: (1) The amount of burley tobacco that domestic manufacturers of cigarettes estimate they intend to purchase on U.S. auction markets or from producers, (2) the average quantity exported annually from the U.S. during the 3 marketing years immediately preceding the marketing year for which the determination is being made, and (3) the quantity, if any, that the Secretary, in the Secretary's discretion, determines necessary to adjust loan stocks to the reserve stock level.

Section 319(c)(3)(C) further provides that, with respect to the 1995 and 1996 marketing years, any reduction in the national marketing quota being determined shall not exceed 10 percent of the previous year's national marketing quota. However, if actual loan stocks exceed the prescribed reserve stock level by 50 percent, the Secretary may set the quota according to the three-component formula (plus or minus 3 percent). The reserve stock level is defined in section 301(b)(14)(C) of the 1938 Act as the greater of 50 million pounds or 15 percent of the national marketing quota for burley tobacco for the marketing year immediately preceding the marketing year for which the level is being determined.

Section 320A of the 1938 Act provides that all domestic manufacturers of cigarettes with more than 1 percent of U.S. cigarette production and sales shall submit to the Secretary a statement of purchase intentions for the 1995 crop of burley tobacco by January 15, 1995. Five such manufacturers were required to submit such a statement for the 1995 crop and the total of their intended purchases for the 1995 crop is 385.0 million pounds. The 3-year average of exports is 160.1 million pounds.

The national marketing quota for the 1994 crop year was 542.7 million pounds (59 FR 33723). Thus, in accordance with section 301 (b)(14)(D), the reserve stock level for use in determining the 1995 marketing quota for burley tobacco is 81.4 million pounds.

On December 1, 1994, the major cigarette manufacturers contracted with Burley Tobacco Growers Cooperative Association, Inc. and Burley Stabilization Corporation to buy all 1991–93 loan stocks. Loans from the 1994 crop total 60.5 million pounds. Accordingly, the adjustment necessary to maintain loan stocks at the reserve supply level is an increase of 20.9 million pounds.

The total of the three marketing quota components for the 1995–96 marketing year is 566.0 million pounds. In addition, USDA used the discretionary authority to reduce the three-component total by 3 percent because the Secretary determined that the 1995/96 supply would be more than ample. Accordingly, the national marketing quota for the marketing year beginning October 1, 1995, for burley tobacco is 549.0 million pounds.

In accordance with section 319(c) of the 1938 Act, the Secretary is authorized to establish a national reserve from the national quota in an amount equivalent to not more than 1 percent of the national quota for the purpose of making corrections in farm quotas adjusting for inequities, and for establishing quotas for new farms. The Secretary has determined that a national reserve for the 1995 crop of burley tobacco of 2,187,713 pounds is adequate for these purposes.

Price Support

Price support is required to be made available for each crop of a kind of tobacco for which quotas are in effect, or for which marketing quotas have not been disapproved by producers, at a level determined in accordance with a formula prescribed in section 106 of the 1949 Act.

With respect to the 1995 crop of burley tobacco, the level of support is determined in accordance with sections 106 (d) and (f) of the 1949 Act. Section 106(f)(7)(A) of the 1949 Act provides that the level of support for the 1995 crop of burley tobacco shall be:

(1) The level, in cents per pound, at which the 1994 crop of burley tobacco was supported, plus or minus, respectively,

(2) An adjustment of not less than 65 percent nor more than 100 percent of the total, as determined by the Secretary after taking into consideration the supply of the kind of tobacco involved in relation to demand, of:

(A) 66.7 percent of the amount by which:

(I) The average price received by producers for burley tobacco on the United States auction markets, as determined by the Secretary, during the 5 marketing years immediately preceding the marketing year for which the determination is being made, excluding the year in which the average price was the highest and the year in which the average price was the lowest in such period, is greater or less than:

(II) The average price received by producers for burley tobacco on the United States auction markets, as determined by the Secretary, during the 5 marketing years immediately preceding the marketing year prior to the marketing year for which the determination is being made, excluding the year in which the average price was the highest and the year in which the average price was the lowest in such period; and

(B) 33.3 percent of the change, expressed as a cost per pound of tobacco, in the index of prices paid by the tobacco producers from January 1 to December 31 of the calendar year immediately preceding the year in which the determination is made.

The difference between the two 5-year averages (i.e., the difference between (A) (I) and (II)) is 2.1 cents per pound. The difference in the cost index from January 1 to December 31, 1994, is 0.9 cents per pound. Applying these components to the price support formula (2.1 cents per pound, two-thirds weight; 0.9 cents per pound, one-third weight) results in a weighted total of 1.7 cents per pound. As indicated, section 106 provides that the Secretary may, on the basis of supply and demand conditions, limit the change in the price support level to no less than 65 percent of that amount. In order to remain competitive in foreign and domestic markets, the Secretary used his discretion to limit the increase to 65 percent of the maximum allowable increase. Accordingly, the 1995 crop of burley tobacco will be supported at 172.5 cents per pound, 1.1 cents higher than in 1994.

List of Subjects

7 CFR Part 723

Acreage allotments, Marketing quotas, Penalties, Reporting and recordkeeping requirements, Tobacco.

7 CFR Part 1464

Loan programs—agriculture, Price support programs, Tobacco, Reporting and recordkeeping requirements, Warehouses.

Accordingly, 7 CFR parts 723 and 1464 are amended as follows:

PART 723—TOBACCO

1. The authority citation for 7 CFR part 723 continues to read as follows:

Authority: 7 U.S.C. 1301, 1311–1314, 1314–1, 1314b, 1314b–1, 1314b–2, 1314c, 1314d, 1314e, 1314f, 1314i, 1315, 1316, 1362, 1363, 1372–75, 1421, 1445–1, and 1445–2.

2. Section 723.112 is amended by adding paragraph (c) to read as follows:

§ 723.112 Burley (type 31) tobacco.

* * * * *

(c) The 1995-crop national marketing quota is 549.0 million pounds.

PART 1464—TOBACCO

3. The authority citation for 7 CFR part 1464 continues to read as follows:

Authority: 7 U.S.C. 1421, 1423, 1441, 1445, 1445–1 and 1445–2; 15 U.S.C. 714b and 714c.

4. Section 1464.19 is amended by adding paragraph (c) to read as follows:

§ 1464.19 Burley (type 31) tobacco.

* * * * *

(c) The 1995-crop national price support level is 172.5 cents per pound.

Signed at Washington, DC, on May 21, 1995.

Bruce R. Weber.

Acting Administrator, Consolidated Farm Service Agency and Acting Executive Vice President, Commodity Credit Corporation.

[FR Doc. 95–13001 Filed 5–25–95; 8:45 am]

BILLING CODE 3410–05–P

Commodity Credit Corporation

7 CFR Part 1421

RIN 0560–AD67

1995-Crop Peanuts; National Average Support Levels for Quota and Additional Peanuts; and Minimum Commodity Credit Corporation Export Edible Sale Price for Additional Peanuts

AGENCY: Commodity Credit Corporation, USDA.

ACTION: Final rule.

SUMMARY: The purpose of this final rule is to codify determinations made by the Secretary of Agriculture (Secretary) with respect to the 1995 peanut crop: the national average support level for quota peanuts of $678.36 per short ton (st); the national average support level for additional peanuts of $132 per st; and the minimum Commodity Credit Corporation (CCC) export edible sale price for additional peanuts of $400 per st. The determinations of the national average support levels for quota and additional peanuts were made pursuant to the statutory requirements of the Agricultural Act of 1949 (the 1949 Act), as amended. The determination and announcement of the minimum CCC export edible sale price for additional peanuts is a discretionary action made to facilitate the negotiation of private contracts for export edible peanuts.

EFFECTIVE DATE: February 15, 1995.

FOR FURTHER INFORMATION CONTACT: John A. Craven, Consolidated Farm Service Agency (CFSA), Room 3744, South Building, United States Department of Agriculture, PO. Box 2415, Washington, DC 20013–2415, Telephone 202–690–0446.

SUPPLEMENTARY INFORMATION:

Executive Order 12866

This final rule has been determined to be significant and was reviewed by OMB under Executive Order 12866.

Federal Assistance Program

The title and number of the Federal Assistance Program, as found in the catalogue of Federal Domestic Assistance, to which this rule applies, are Commodity Loans and Purchases—10.051.

Executive Order 12778

This rule has been reviewed in accordance with Executive Order 12778. The provisions of this rule do preempt State law, are not retroactive, and do not involve administrative appeals.

Regulatory Flexibility Act

It has been determined that the Regulatory Flexibility Act is not applicable because CCC is not required by 5 U.S.C. 553 or any other provision of law to publish a notice of proposed rulemaking with respect to the subject of these determinations.

Paperwork Reduction Act

The amendments to 7 CFR part 1421 set forth in this final rule do not contain information collections that require clearance by the Office of Management and Budget under the provisions of 44 U.S.C. 35.

Determinations

This rule is issued pursuant to the provisions of the 1949 Act.

On February 15, 1995, the Secretary announced the national average support levels for 1995-crop quota and additional peanuts and the minimum CCC export edible sales price for 1995-crop additional peanuts.

Section 1017 of the Food Security Act of 1985, as amended, provides that the Secretary shall determine the rate of loans, payments, and purchases for the 1991 through 1995 crops of commodities without regard to the requirements for notice and public participation in rulemaking as prescribed in 5 U.S.C. 553 or any directive of the Secretary.

A. Quota Peanuts Support Level

In accordance with section 108B(a)(2) of the 1949 Act, the national average price support level for 1995 crop quota peanuts must be the corresponding 1994-crop price support level adjusted to reflect any increases in the national average cost of peanut production (excluding any changes in the cost of land) during the calendar year immediately preceding marketing year (MY) 1995, except that the MY 1995 price support level cannot exceed the MY 1994 support level by more than 5 percent. In the event of a reduction in these costs of production, the MY 1995 price support level for quota peanuts would be required, under the terms of Section 108B, to be unchanged from MY 1994. The MY 1994 quota peanut price support level is $678.36 per short ton (st). The MY 1995 support level for quota peanuts was determined based on the following estimates:

PEANUT PRODUCTION COST CALCULATIONS

Variable/component	1993	1994
Production costs.	$492.91/acre	$489.07/acre.
Trend yields .	2,500 lbs./acre.	2,500 lbs./acre.
Production costs.	$394.33/st	$391.26/st.

1995 QUOTA CALCULATIONS

[Dollars per short ton]

Change during 1994 in the average cost of producing peanuts	– $3.07
1995 Quota Support Level (1994 Support + any cost increase)	678.36

As indicated, relevant peanut production costs decreased from calendar year 1993 to 1994. The MY 1995 quota peanut price support level is accordingly established at $678.36 per st, unchanged from MY 1994.

B. Additional Peanut Support Level

Section 108B(b)(1) of the 1949 Act provides that price support shall be made available for additional peanuts at such level as the Secretary determines will ensure no losses to CCC from the sale or disposal of such peanuts, taking into consideration the demand for peanut oil and peanut meal, expected prices of other vegetable oils and protein meals, and the demand for peanuts in foreign markets.

The MY 1995 price support level for additional peanuts is established at $132 per st to ensure no losses to CCC from the sale or disposal of such peanuts, unchanged from MY 1994. Peanuts are pledged as collateral for price support loans. The peanuts are then sold out of inventory in order to recoup the loan principal, interest and related costs. The statutory factors have been analyzed as set out below. Based on those factors, it is anticipated that while the current oil market is unusually strong, there is enough uncertainty in the market to suggest caution in setting the floor price for inventory peanuts sold for crushing. For that reason, it has been determined that the support rate should remain unchanged from the level for additional peanuts that was in place for the 1994 crop, that being $132.00 per st.

In making this determination, the following information was considered:

1. The domestic use of peanut oil during MY 1995 is forecast to be 115,000 st, up 2 percent from MY 1994 projected domestic use. MY 1995 peanut oil beginning stocks are expected to be 19,000 st, up 50 percent from MY 1994. The MY 1995 average peanut oil price is expected to be $0.40 per pound, down $0.06 per pound from MY 1994.

2. The domestic use of peanut meal during MY 1995 is forecast to be 180,000 st, down 2,000 st from MY 1994 projected domestic use. MY 1995 peanut meal beginning stocks are expected to be 5,000 st, down 2,000 st from MY 1994. The MY 1995 average peanut meal price is expected to be $155 per st, up $20 per st from MY 1994.

3. The domestic disappearance of soybean oil during MY 1995 is forecast to be 6,650,000 st, up 2.3 percent from projected MY 1994 domestic disappearance. MY 1995 soybean oil beginning stocks are expected to be 640,000 st, up 16 percent from MY 1994. The MY 1995 average soybean oil price is expected to be $0.27 per pound, unchanged from MY 1994.

4. The domestic disappearance of cottonseed oil during MY 1995 is forecast to be 510,000 st, up slightly from projected MY 1994 domestic disappearance. MY 1995 cottonseed oil beginning stocks are expected to be 40,000 st, down 25 percent from MY 1994. The MY 1995 average cottonseed oil price is expected to be $0.27 per pound, up $0.02 from MY 1994.

5. The domestic disappearance of soybean meal during MY 1995 is forecast to be 26,500,000 st, up 1.0 percent from projected MY 1994 domestic disappearance. MY 1995 soybean meal beginning stocks are expected to be 300,000 st, up 50 percent from MY 1994. The MY 1995 average soybean meal price is expected to be $160 per st, up $5 per st from MY 1994.

6. The domestic disappearance of cottonseed meal during MY 1995 is forecast to be 1,725,000 st, up 3 percent from projected MY 1994 domestic disappearance. MY 1995 cottonseed meal beginning stocks are expected to be 65,000 st, up 23 percent from MY 1994. The average cottonseed meal price for MY 1995 is expected to be $125 per st, up $5 per st from MY 1994.

7. The world use of peanuts for MY 1994 is expected to be 24.42 million metric tons, up 1.3 percent from MY 1993. World peanut production for MY 1994 is forecast to be 24.47 million metric tons, up 2 percent from MY 1993. Ending stocks for MY 1994 are forecast at 0.70 million metric tons, up 8 percent from MY 1993.

C. Minimum CCC Export Edible Sales Price for Additional Peanuts

The minimum price at which additional peanuts owned or controlled by CCC may be sold for use as edible peanuts in export markets is a discretionary action that, by practice, is announced at the same time as quota and additional peanut support levels to facilitate the negotiation of additional peanut contracts by producers and handlers.

A proposed rule setting forth the MY 1995 minimum CCC export edible sales price of $400 per st was published on January 4, 1995 (60 FR 381). Six comments were received in response to the notice during the public comment period that ended on January 17, 1995. The six respondents addressing this issue were five shellers or sheller/processors and one peanut product manufacturer. Five comments supported a CCC export edible sales price of $400 per st or above; most of these felt that the $400 minimum had served the industry well since 1986. One sheller respondent felt that CCC should discontinue the policy of announcing a minimum export edible sales price and make all additional peanuts available to export markets at market determined prices. The $400 price has been adopted in this final rule for the reasons set out in the January 4 notice.

List of Subjects in 7 CFR Part 1421

Grains, Loan programs-agriculture, Oilseeds, Peanuts, Price support programs, Reporting and recordkeeping requirements, Soybeans, Surety bonds, Warehouses.

Accordingly, 7 CFR part 1421 is amended as follows:

PART 1421—GRAINS AND SIMILARLY HANDLED COMMODITIES

1. The authority citation for 7 CFR part 1421 continues to read as follows:

Authority: 7 U.S.C. 1421, 1423, 1425, 1441z, 1444f–1, 1445b–3a, 1445c–3, 1445e, and 1446f; 15 U.S.C. 714b and 714c.

2. Section 1421.7(b)(8)(iv) is revised and paragraph (b)(8)(v) is added to read as follows:

§ 1421.7 Adjustment of basic support rates.

* * * * *

(b) * * *

(8) * * *

(iv) 1994 Peanuts, Quota—$678.36 per short ton; Additional—$132.00 per short ton;

(v) 1995 Peanuts, Quota—$678.36 per short ton; Additional—$132.00 per short ton;

* * * * *

3. Sections 1421.27(a)(2)(iv) is revised and paragraph (a)(2)(v) is added to read as follows:

§ 1421.27 Producer-handler purchases of additional peanuts pledged as collateral for a loan.

(a) * * *

(2) * * *

(iv) The 1994 minimum CCC sales price for additional peanuts sold for export edible use is $400 per short ton;

(v) The 1995 minimum CCC sales price for additional peanuts sold for export edible use is $400 per short ton.

* * * * *

Signed at Washington, DC, on May 21, 1995.

Bruce R. Weber,

Acting Executive Vice President, Commodity Credit Corporation.

[FR Doc. 95–13000 Filed 5–25–95; 8:45 am]

BILLING CODE 3410–05–P

SMALL BUSINESS ADMINISTRATION

13 CFR Part 116

Policies of General Application

AGENCY: Small Business Administration (SBA).

ACTION: Interim final rule with request for comments.

SUMMARY: On October 22, 1994, the President signed Public Law 103–403, The Small Business Administration Reauthorization and Amendments Act of 1994. Section 612 of that Act requires SBA to promulgate regulations by April 22, 1995 which require certification by any recipient of financial assistance under the Small Business Act that such recipient is not delinquent on a court order or other formal agreement requiring payment of child support. This interim final rule, published in accordance with Public Law 103–403, implements this requirement.

DATES: This rule becomes effective May 26, 1995. Comments by June 26, 1995.

ADDRESSES: Comments should be sent to John R. Cox, Associate Administrator for Financial Assistance, Small Business Administration, 409 Third Street, SW., Washington, DC 20416.

FOR FURTHER INFORMATION CONTACT: John R. Cox, (202) 205–6490.

SUPPLEMENTARY INFORMATION: Public Law 103–403 required SBA, among other things, to promulgate regulations which require certification by any recipient of Agency financial assistance under the Small Business Act that the recipient is not delinquent on a court order or other formal agreement requiring payment of child support. In that regard, Section 612 of Pub. L. 103–403, October 22, 1994, states:

(f) Certification of Compliance with Child Support Obligations.—

(1) In General. For financial assistance approved *after the promulgation of final regulations to implement this section,* each recipient of financial assistance under this Act, including a recipient of a direct loan or a loan guarantee, shall certify that the recipient is not more than 60 days delinquent under the terms of any—

(A) administrative order;

(B) court order; or

(C) repayment agreement entered into between the recipient and the custodial parent or State agency providing child support enforcement services, that requires the recipient to pay child support, as such is defined in section 462(b) of the Social Security Act.

(2) Enforcement. *Not later than 6 months after the date of enactment of this subsection, the Administration shall promulgate such regulations as may be necessary to enforce compliance with the requirements of this subsection.*

[Emphasis added.]

The Conference Report language on this section is useful in providing guidance for implementing this requirement. (See Report 103–824 to accompany S. 2060.) It provides:

Sec. 612. Certification of compliance with child support obligations.

Both bills contained provisions requiring SBA borrowers to certify that they are not in violation of any court order or agreement requiring the payment of child support. The conference report contains the same provision with a clarification with court orders, administrative orders, or agreements, specifically 60 days or more in arrears.

While intending to strengthen federal policy in support of family support obligations, the conferees recognize that economic circumstances may from time to time cause a parent to be late in such payments. It is not the intent of the conferees to subject minor lapses to the criminal and civil penalties contained in both the Small Business Act and the False Statements Act for false representations made to the agency in the course of a loan application or other application for assistance. Hence, the conference agreement provides for a certification that the applicant is not more than 60 days late in making any child support payment required by court order or agreement. Loan applicants should be advised of this provision at the outset of the

application process, but certification pursuant to this section may be made as part of the loan closing.

Thus, certification at the time of application does not appear to be *required*, although it may be used as a means for ''weeding out'' delinquents. In the alternative, certification at the time of closing is consistent with the intent of Congress, and these regulations require such certification.

SBA has also determined that the intent of the legislation is to require *individuals* who are subject to agreements requiring the payment of child support to make the required certifications. Many of the applicants for SBA financial assistance are corporations, partnerships and sole proprietorships. For purposes of these regulations, SBA will require any owner or partner holding 50% or more of the voting interests of an applicant (a principal) to certify.

Finally, SBA takes the position that the statute intends coverage only for its business loan and disaster loan program; i.e. financial assistance made available under the Small Business Act. Therefore, only applicants for assistance under those programs will be required to make the required certifications.

In practice, after the effective date of these regulations, SBA or its participating lender will notify the principals of all applicants for assistance under the business and disaster loan programs at the time of application that they must certify to compliance with outstanding court orders or agreements requiring the payment of child support. The required certification will be made a condition of the loan authorization which if not satisfied will be a ground for not closing the loan.

Compliance With Executive Orders 12612, 12778, and 12866, the Regulatory Flexibility Act, 5 U.S.C. 601 et seq., and the Paperwork Reduction Act, 44 U.S.C. Ch. 35

For purposes of the Regulatory Flexibility Act, 5 U.S.C. 601 et seq., SBA certifies that this final rule does not have a significant economic impact on a substantial number of small entities.

BAS certifies that this final rule does not constitute a significant regulatory action for the purposes of Executive Order 12866, since the change is not likely to result in an annual effect on the economy of $100 million or more.

SBA certifies that this final rule does not impose additional reporting or recordkeeping requirements which would be subject to the Paperwork Reduction Act, 44 U.S.C. Chapter 35.

This final rule does not have federalism implications warranting the preparation of a Federalism Assessment in accordance with Executive Order 12612.

For purposes of Executive Order 12778, SBA certifies that this final rule is drafted, to the extent practicable, in accordance with the standards set forth in section 2 of that Order.

Because this final rule reflects a reporting requirement imposed by Pub. L. 103–403, and is required to be effective by April 22, 1995, SBA is publishing this final rule without opportunity for prior public comment pursuant to 5 U.S.C. 553(b)(A). However, SBA solicits and will consider any comments it receives with respect to this final rule in making future adjustments.

(Catalog of Federal Domestic Assistance Program Nos. 59.001, 59.002, 59.008, 59.012, 59.021)

List of Subjects in 13 CFR Part 116

Small businesses.

Accordingly, pursuant to the authority contained in section 5(b)(6) of the Small Business Act, 15 U.S.C. 634(b)(6), SBA amends part 116, chapter I, title 13, Code of Federal Regulations, as follows:

1. Subpart F is added to read as follows:

Subpart F—Compliance With Child Support Obligations.

116.42 Policy.
116.43 Certification.
116.44 Recipient.

Authority: Sec. 612 of Pub. L. 103–403, 108 Stat. 4175.

Subpart F—Compliance With Child Support Obligations

§ 116.42 Policy.

It is the policy of SBA that each recipient of financial assistance under the Small Business Act shall certify that the recipient is not more than 60 days delinquent under any administrative order, court order, or repayment agreement between the recipient and the custodial parent or a State agency providing child support enforcement services that requires the recipient to pay child support as that term is defined in section 462(b) of the Social Security Act.

§ 116.43 Certification.

The certification required to comply with the statement of policy expressed in § 116.41 shall be a condition of all financial assistance granted under sections 7 (a) and (b) of the Small Business Act.

§ 116.44 Recipient.

For purposes of this subpart the term recipient shall mean an owner of 50% or more of the ownership interest of an applicant for assistance under section 7 (a) or (b) of the Small Business Act.

Dated: April 26, 1995.

Cassandra M. Pulley,

Deputy Administrator.

[FR Doc. 95–12647 Filed 5–25–95; 8:45 am]

BILLING CODE 8025–01–M

DEPARTMENT OF TRANSPORTATION

Federal Aviation Administration

14 CFR Part 39

[Docket No. 95–ANE–05; Amendment 39–9243; AD 95–11–08]

Airworthiness Directives; Hartzell Propeller Inc. Models HC–92WK–( ) and HC–92ZK–( ) Propellers

AGENCY: Federal Aviation Administration, DOT.

ACTION: Final rule; request for comments.

SUMMARY: This amendment supersedes airworthiness directive (AD) 73–02–01, applicable to Hartzell Propeller Inc. Models HC–92WK–( ) and HC–92ZK–( ) propellers, that currently requires visual and penetrant inspections of the propeller blade shank area for corrosion at 1,000 hour time in service (TIS) intervals and shotpeening after inspection. This amendment requires a one-time inspection of the blade clamp screws, then a dye penetrant inspection, compressive rolling of the blade shank, and replacement of blade clamp screws, all to be accomplished at intervals of 500 hours TIS. This amendment is prompted by reports of two recent propeller blade separations that occurred at less than 1,000 hours TIS since last inspection. The actions specified by this AD are intended to prevent propeller blade separation, which could result in loss of control of the aircraft.

DATES: Effective June 12, 1995.

The incorporation by reference of certain publications listed in the regulations is approved by the Director of the Federal Register as of June 12, 1995.

Comments for inclusion in the Rules Docket must be received on or before July 25, 1995.

ADDRESSES: Submit comments in triplicate to the Federal Aviation Administration (FAA), New England Region, Office of the Assistant Chief Counsel, Attention: Rules Docket No.

95–ANE–05, 12 New England Executive Park, Burlington, MA 01803–5299.

The service information referenced in this AD may be obtained from Hartzell Propeller Inc., One Propeller Place, Piqua, OH 45356–2634; telephone (513) 778–4200, fax (513) 778–4391. This information may be examined at the FAA, New England Region, Office of the Assistant Chief Counsel, Burlington, MA; or at the Office of the Federal Register, 800 North Capitol Street, NW., suite 700, Washington, DC.

FOR FURTHER INFORMATION CONTACT: Tomaso DiPaolo, Aerospace Engineer, Chicago Aircraft Certification Office, FAA, Small Airplane Directorate, 2300 East Devon Avenue, Room 232, Des Plaines, IL 60018; telephone (708) 294–7031, fax (708) 294–7834.

SUPPLEMENTARY INFORMATION: On January 5, 1973, the Federal Aviation Administration (FAA) issued airworthiness directive (AD) 73–02–01, Amendment 39–1584 (38 FR 1381, January 12, 1973), applicable to Hartzell Propeller Inc. Models HC–92WK–( ) and HC–92ZK–( ) propellers, to require visual and penetrant inspections of the propeller blade shank area for corrosion prior to accumulating 1,000 hour time in service (TIS) intervals, and shotpeening after inspection. That action was prompted by the separation of a blade at the blank shank of a Hartzell propeller. That condition, if not corrected, could result in propeller blade separation, which could result in loss of control of the aircraft.

Since the issuance of that AD, the FAA has received reports of two recent propeller blade separations that occurred at less than 1,000 hours TIS since last inspection. In both accidents, the propeller blade separation resulted from a crack at the propeller blade shank. Either crack may have initiated from a failed blade clamp screw, part number A–282, which was found in both accidents.

The FAA has reviewed and approved the technical contents of Hartzell Propeller Inc. Service Bulletin (SB) No. 202, dated January 5, 1995, that describes procedures for inspection of the clamp screw, visual and dye penetrant inspections and compressive rolling of the propeller blade shank, and replacement of blade clamp screws. Since an unsafe condition has been identified that is likely to exist or develop on other propellers of this same type design, this AD supersedes AD 73–02–01 to require a one-time inspection of the clamp screws, then a dye penetrant inspection, compressive rolling of the propeller blade shank, and replacement of blade clamp screws, all to be accomplished at intervals of 500 hours TIS. The actions are required to be accomplished in accordance with the SB described previously.

Since a situation exists that requires the immediate adoption of this regulation, it is found that notice and opportunity for prior public comment hereon are impracticable, and that good cause exists for making this amendment effective in less than 30 days.

Comments Invited

Although this action is in the form of a final rule that involves requirements affecting flight safety and, thus, was not preceded by notice and an opportunity for public comment, comments are invited on this rule. Interested persons are invited to comment on this rule by submitting such written data, views, or arguments as they may desire. Communications should identify the Rules Docket number and be submitted in triplicate to the address specified under the caption **ADDRESSES.** All communications received on or before the closing date for comments will be considered, and this rule may be amended in light of the comments received. Factual information that supports the commenter's ideas and suggestions is extremely helpful in evaluating the effectiveness of the AD action and determining whether additional rulemaking action would be needed.

Comments are specifically invited on the overall regulatory, economic, environmental, and energy aspects of the rule that might suggest a need to modify the rule. All comments submitted will be available, both before and after the closing date for comments, in the Rules Docket for examination by interested persons. A report that summarizes each FAA-public contact concerned with the substance of this AD will be filed in the Rules Docket.

Commenters wishing the FAA to acknowledge receipt of their comments submitted in response to this notice must submit a self-addressed, stamped postcard on which the following statement is made: ''Comments to Docket Number 95–ANE–05.'' The postcard will be date stamped and returned to the commenter.

The regulations adopted herein will not have substantial direct effects on the States, on the relationship between the national government and the States, or on the distribution of power and responsibilities among the various levels of government. Therefore, in accordance with Executive Order 12612, it is determined that this final rule does not have sufficient federalism implications to warrant the preparation of a Federalism Assessment.

The FAA has determined that this regulation is an emergency regulation that must be issued immediately to correct an unsafe condition in aircraft, and is not a ''significant regulatory action'' under Executive Order 12866. It has been determined further that this action involves an emergency regulation under DOT Regulatory Policies and Procedures (44 FR 11034, February 26, 1979). If it is determined that this emergency regulation otherwise would be significant under DOT Regulatory Policies and Procedures, a final regulatory evaluation will be prepared and placed in the Rules Docket. A copy of it, if filed, may be obtained from the Rules Docket at the location provided under the caption **ADDRESSES.**

List of Subjects in 14 CFR Part 39

Air transportation, Aircraft, Aviation safety, Incorporation by reference, Safety.

Adoption of the Amendment

Accordingly, pursuant to the authority delegated to me by the Administrator, the Federal Aviation Administration amends part 39 of the Federal Aviation Regulations (14 CFR part 39) as follows:

PART 39—AIRWORTHINESS DIRECTIVES

1. The authority citation for part 39 continues to read as follows:

Authority: 49 U.S.C. App. 1354(a), 1421 and 1423; 49 U.S.C. 106(g); and 14 CFR 11.89.

§ 39.13 [Amended]

2. Section 39.13 is amended by removing Amendment 39–1584, (38 FR 1381, January 12 ,1973), and by adding a new airworthiness directive, Amendment 39–9243, to read as follows:

95–11–08 Hartzell Propeller Inc.: Amendment 39–9243. Docket 95–ANE–05. Supersedes AD 73–02–01, Amendment 39–1584.

Applicability: Hartzell Propeller Inc. Models HC–92WK–( ) and HC–92ZK–( ) propellers, installed on but not limited to the following aircraft: Aerostar Aircraft Corp. (formerly Ted Smith Aerostar) Model Aerostar 360; Air & Space America, Inc. Model 18A; Aircraft Acquisition Corp. (formerly Helio) Models H–250, 500; Beech Models 95, B95, B95A, D95A, E95; Cessna Models 172, 175, 175A; Found Brothers Aviation Ltd. Models FBA 100, FBA–2C; Kwad Company Model Super-V; Mooney Aircraft Corp. Model M20A; Piper Models PA–23, PA–24, PA–25; Procaer Model F15/B; Revo Inc. Models C2, Lake LA–4; and

Simmering Graz Pauker A.G. Model SGP–222.

Note 1: This airworthiness directive (AD) applies to each propeller identified in the preceding applicability provision, regardless of whether it has been modified, altered, or repaired in the area subject to the requirements of this AD. For propellers that have been modified, altered, or repaired so that the performance of the requirements of this AD is affected, the owner/operator must use the authority provided in paragraph (e) to request approval from the Federal Aviation Administration (FAA). This approval may address either no action, if the current configuration eliminates the unsafe condition, or different actions necessary to address the unsafe condition described in this AD. Such a request should include an assessment of the effect of the changed configuration on the unsafe condition addressed by this AD. In no case does the presence of any modification, alteration, or repair remove any propeller from the applicability of this AD.

Note 2: The above is not an exhaustive list of aircraft which may contain the affected Hartzell Models HC–92WK–( ) and HC–92ZK–( ) propellers because of installation approvals made by, for example, Supplemental Type Certificate or field approval under FAA Form 337 ''Major Repair and Alteration.'' It is the responsibility of the owner, operator, and person returning the aircraft to service to determine if an aircraft has an affected propeller.

Compliance: Required as indicated, unless accomplished previously.

To prevent propeller blade separation, which could result in loss of control of the aircraft, accomplish the following:

(a) For all affected propellers, within 10 hours time in service (TIS) after the effective date of this AD, perform a blade clamp screw inspection in accordance with Procedure No. 1 of Hartzell Propeller Inc. Service Bulletin (SB) No. 202, dated January 5, 1995. If any clamp screws are loose (i.e., screws turn when applying torque in a clockwise rotation) or broken, remove propeller and send to an authorized repair station for disassembly and inspection in accordance with paragraph (b) of this AD prior to further flight.

(b) For affected propellers whose time since last blade dye penetrant inspection or compliance with AD 73–02–01 is unknown, within the next 10 hours TIS after the effective date of this AD, accomplish the following:

(1) Disassemble, perform a dye penetrant inspection of the blade shank, perform compressive rolling of the blade shank, and replace clamp socket screws with Part Number (P/N) A–321 clamp socket screws in accordance with Procedure No. 2 of Hartzell Propeller Inc. SB No. 202, dated January 5, 1995. If cracks are found during a dye penetrant inspection of the blade shank, replace with a serviceable blade that has been compressively rolled in the blade shank.

(2) At intervals not to exceed 500 hours TIS since last inspection, repeat paragraph (b)(1) of this AD. The P/N A–321 clamp screws are to be used one time only and are to be replaced with new screws each time the propeller blade clamp is disassembled.

(c) For affected propellers whose time since last blade dye penetrant inspection or compliance with AD 73–02–01 is greater than 275 hours TIS, within the next 25 hours TIS after the effective date of this AD, accomplish paragraphs (b)(1) and (b)(2) of this AD.

(d) For affected propellers whose time since last blade dye penetrant inspection or compliance with AD 73–02–01 is less than or equal to 275 hours TIS, prior to reaching 300 hours TIS since last blade dye penetrant inspection or compliance with AD 73–02–01, accomplish paragraphs (b)(1) and (b)(2) of this AD.

(e) An alternative method of compliance or adjustment of the compliance time that provides an acceptable level of safety may be used if approved by the Manager, Chicago Aircraft Certification Office. The request should be forwarded through an appropriate FAA Maintenance Inspector, who may add comments and then send it to the Manager, Chicago Aircraft Certification Office.

Note: Information concerning the existence of approved alternative methods of compliance with this airworthiness directive, if any, may be obtained from the Chicago Aircraft Certification Office.

(f) Special flight permits may be issued in accordance with sections 21.197 and 21.199 of the Federal Aviation Regulations (14 CFR 21.197 and 21.199) to operate the aircraft to a location where the requirements of this AD can be accomplished. Special flight permits should not be issued if loose or broken screws are found.

(g) The actions required by this AD shall be done in accordance with the following Hartzell Propeller Inc. SB:

Document No. SB No. 202.

Pages: 1–5.

Date: January 5, 1995.

Total pages: 5.

This incorporation by reference was approved by the Director of the Federal Register in accordance with 5 U.S.C. 552(a) and 1 CFR part 51. Copies may be obtained from Hartzell Propeller Inc., One Propeller Place, Piqua, OH 45356–2634; telephone (513) 778–4200, fax (513) 778–4391. Copies may be inspected at the FAA, New England Region, Office of the Assistant Chief Counsel, 12 New England Executive Park, Burlington, MA; or at the Office of the Federal Register, 800 North Capitol Street, NW., suite 700, Washington, DC.

(h) This amendment becomes effective on June 12, 1995.

Issued in Burlington, Massachusetts, on May 17, 1995.

James C. Jones,

Acting Manager, Engine and Propeller Directorate, Aircraft Certification Service.

[FR Doc. 95–12825 Filed 5–24–95; 2:35 pm]

BILLING CODE 4910–13–U

14 CFR Part 39

[Docket No. 94–SW–08–AD; Amendment 39–9247; AD 95–11–14]

Airworthiness Directives; Bell Helicopter Textron, Inc. Model 206A, 206B, 206L, 206L–1, 206L–3, and 206L–4 Helicopters

AGENCY: Federal Aviation Administration, DOT.

ACTION: Final rule.

SUMMARY: This amendment adopts a new airworthiness directive (AD), applicable to Bell Helicopter Textron, Inc. Model 206A, 206B, 206L, 206L–1, 206L–3, and 206L–4 helicopters, that requires removal and replacement of certain crosstube assemblies (crosstubes). This amendment is prompted by two accidents attributed to crosstube failures and 27 field reports that indicated corrosion or metal fatigue may cause a failure of the affected crosstubes. The actions specified by this AD are intended to prevent failure of the crosstubes and subsequent loss of control of the helicopter.

DATE: Effective June 30, 1995.

FOR FURTHER INFORMATION CONTACT: Mr. Tony Nguyen, Aerospace Engineer, FAA, Rotorcraft Directorate, Rotorcraft Certification Office, Fort Worth, Texas 76193–0170, telephone (817) 222–5177, fax (817) 222–5959.

SUPPLEMENTARY INFORMATION: A proposal to amend part 39 of the Federal Aviation Regulations (14 CFR part 39) to include an airworthiness directive (AD) that is applicable to Bell Helicopter Textron, Inc. Model 206A, 206B, 206L, 206L–1, 206L–3, and 206L–4 helicopters was published in the **Federal Register** on November 14, 1994 (59 FR 56438). That action proposed to require removal and replacement of certain crosstubes within the next 90 calendar days.

Interested persons have been afforded an opportunity to participate in the making of this amendment. Due consideration has been given to the one comment received.

The commenter states that the FAA should require an annual skid gear inspection rather than requiring the more costly replacement of the crosstubes. The FAA does not concur. The FAA has determined that, due to the location of the potential crack and the speed at which a crack could propagate, an annual inspection would not be a sufficient interval to detect a potentially critical crack. The economic impact of a repetitive inspection at an interval short enough to detect the crack would have a greater adverse economic impact on owners/operators than the

economic impact which would be incurred by replacing the crosstubes.

After careful review of the available data, including the comment noted above, the FAA has determined that air safety and the public interest require the adoption of the rule as proposed, except for editorial changes and adding explanatory Note 1, relating to the scope of the applicability statement when modifications, alterations, or repairs have been made in the area subject to the requirements of the AD.

The FAA estimates that 5,700 helicopters of U.S. registry will be affected by this AD, that it will take approximately 10 work hours per helicopter to accomplish the required actions, and that the average labor rate is $60 per work hour. Required parts will cost approximately $6,400 per helicopter. Based on these figures, the total cost impact of the AD on U.S. operators is estimated to be $39,900,000 to replace two crosstubes per helicopter.

The regulations adopted herein will not have substantial direct effects on the States, on the relationship between the national government and the States, or on the distribution of power and responsibilities among the various levels of government. Therefore, in accordance with Executive Order 12612, it is determined that this final rule does not have sufficient federalism implications to warrant the preparation of a Federalism Assessment.

For the reasons discussed above, I certify that this action (1) is not a ''significant regulatory action'' under Executive Order 12866; (2) is not a ''significant rule'' under DOT Regulatory Policies and Procedures (44 FR 11034, February 26, 1979); and (3) will not have a significant economic impact, positive or negative, on a substantial number of small entities under the criteria of the Regulatory Flexibility Act. A final evaluation has been prepared for this action and it is contained in the Rules Docket. A copy of it may be obtained from the Rules Docket at the location provided under the caption **ADDRESSES**.

List of Subjects in 14 CFR Part 39

Air transportation, Aircraft, Aviation safety, Safety. Adoption of the Amendment

Accordingly, pursuant to the authority delegated to me by the Administrator, the Federal Aviation Administration amends part 39 of the Federal Aviation Regulations (14 CFR part 39) as follows:

PART 39—AIRWORTHINESS DIRECTIVES

1. The authority citation for part 39 continues to read as follows:

Authority: 49 U.S.C. App. 1354(a), 1421 and 1423; 49 U.S.C. 106(g); and 14 CFR 11.89.

§ 39.13 [Amended]

2. Section 39.13 is amended by adding a new airworthiness directive to read as follows:

95–11–14 Bell Helicopter Textron, Inc (BHTI): Amendment 39–9247 Docket No. 94–SW–08–AD.

Applicability: Model 206A, 206B, 206L, 206L–1, 206L–3, and 206L–4 helicopters, with crosstube assemblies (crosstubes), BHTI part numbers (P/N) 206–050–107, 206–050–119, 206–050–134, 206–050–157, 206–050–169, 206–053–109, 206–053–119, and 206–053–129 (all dash numbers), or Airborne Supply, Inc. P/N AB206–050–107, AB206–050–119, or AB206–053–109 (all dash numbers), installed, certificated in any category.

Note 1: This AD applies to each helicopter identified in the preceding applicability provision, regardless of whether it has been modified, altered, or repaired in the area subject to the requirements of this AD. For helicopters that have been modified, altered, or repaired so that the performance of the requirements of this AD is affected, the owner/operator must use the authority provided in paragraph (c) to request approval from the FAA. This approval may address either no action, if the current configuration eliminates the unsafe condition, or different actions necessary to address the unsafe condition described in this AD. Such a request should include an assessment of the effect of the changed configuration on the unsafe condition addressed by this AD. In no case does the presence of any modification, alteration, or repair remove any helicopter from the applicability of this AD.

Compliance: Required as indicated, unless accomplished previously. To prevent failure of the crosstubes and subsequent loss of control of the helicopter, accomplish the following:

(a) Within 90 calendar days after the effective date of this AD, remove any affected crosstube and replace it with an airworthy crosstube in accordance with the appropriate maintenance manual or service instructions. Any crosstubes removed as a result of this AD shall be permanently marked as unairworthy.

Note 2: For BHTI P/N 206–053–109 and 206–053–119, the P/N are vibro-etched on the upper cuff of the crosstube on the aft side on both forward and aft crosstubes; for BHTI P/N 206–053–129, the P/N is vibro-etched on the bottom of the cuff on the aft side on both forward and aft crosstubes; for BHTI P/N 206–050–107, 206–050–119, 206–050–134, 206–050–157, and 206–050–169, the P/N are stamped in ink on the crosstube, which is shipped without paint (once the helicopter is painted, the P/N are covered); and for Airborne Supply, Inc., P/N AB206–050–107, AB206–050–119, and AB206–053–109, the P/N are rubber stamped at the bottom end of the crosstube.

(b) If the crosstubes' P/N cannot be determined by reference to the crosstubes, if possible, determine the P/N by reference to the maintenance records or other aircraft records. If the crosstubes' P/N cannot be determined, replace the crosstubes with airworthy crosstubes within 90 calendar days after the effective date of this AD in accordance with the appropriate maintenance manual or service instructions.

(c) An alternative method of compliance or adjustment of the compliance time that provides an acceptable level of safety may be used when approved by the Manager, Rotorcraft Certification Office, FAA, Rotorcraft Directorate. Operators shall submit their requests through an FAA Principal Maintenance Inspector, who may concur or comment and then send it to the Manager, Rotorcraft Certification Office.

Note 3: Information concerning the existence of approved alternative methods of compliance with this AD, if any, may be obtained from the Rotorcraft Certification Office.

(d) Special flight permits may be issued in accordance with sections 21.197 and 21.199 of the Federal Aviation Regulations (14 CFR 21.197 and 21.199) to operate the helicopter to a location where the requirements of this AD can be accomplished.

(e) This amendment becomes effective on June 30, 1995.

Issued in Fort Worth, Texas, on May 19, 1995.

Eric Bries,

Acting Manager, Rotorcraft Directorate, Aircraft Certification Service.

[FR Doc. 95–12957 Filed 5–25–95; 8:45 am]

BILLING CODE 4910–13–P

---

14 CFR Part 71

[Airspace Docket No. 94–ASW–18]

Amendment of Class D Airspace; New Orleans NAS, Alvin Callender Field, LA

AGENCY: Federal Aviation Administration (FAA), DOT.

ACTION: Final rule.

SUMMARY: This action amends the Class D airspace at New Orleans Naval Air Station (NAS), Alvin Callender Field, New Orleans, LA. The decommissioning of the New Orleans NAS Non-directional Radio Beacon (NDB) removes the need for controlled airspace to protect the standard instrument approach for the NDB. This action is intended to eliminate the Class D airspace that is no longer necessary as a result of the decommissioning of the New Orleans NAS NDB at New Orleans NAS, Alvin Callender Field, New Orleans, LA.

EFFECTIVE DATE: 0901 UTC, July 20, 1995.

FOR FURTHER INFORMATION CONTACT: Donald J. Day, System Management Branch, Air Traffic Division, Southwest Region, Federal Aviation Administration, Fort Worth, TX 76193–0530, telephone 817–222–5593.

SUPPLEMENTARY INFORMATION:

History

On December 16, 1994, a proposal to amend part 71 of the Federal Aviation Regulations (14 CFR part 71) to amend the Class D airspace at New Orleans NAS, Alvin Callender Field, LA, was published in the **Federal Register** (59 FR 64877). Decommissioning of the NDB permits the amendment of Class D airspace at this airport. The proposal was to remove the controlled airspace that was no longer needed as a result of the decommissioning of the NDB and the associated NDB SIAP.

Interested parties were invited to participate in this rulemaking proceeding by submitting written comments on the proposal to the FAA. No comments to the proposal were received. Therefore the rule is adopted as proposed.

The coordinates for this airspace docket are based on North American Datum 83. Class D airspace designations are published in Paragraph 5000 of FAA Order 7400.9B dated July 18, 1994, and effective September 16, 1994, which is incorporated by reference in 14 CFR 71.1. The Class D airspace designation listed in this document will be published subsequently in the Order.

The Rule

This amendment to part 71 of the Federal Aviation Regulations (14 CFR part 71) revises the Class D airspace located at New Orleans NAS, Alvin Callender, Field, LA, to that necessary to provide controlled airspace for IFR operations at the airfield.

The FAA has determined that this regulation only involves an established body of technical regulations that need frequent and routine amendments to keep them operationally current. It, therefore—(1) is not a ''significant regulatory action'' under Executive Order 12866; (2) is not a ''significant rule'' under DOT Regulatory Policies and Procedures (44 FR 11034; February 26, 1979); and (3) does not warrant preparation of a regulatory evaluation as the anticipated impact is so minimal. Since this is a routine matter that will only affect air traffic procedures and air navigation, it is certified that this rule will not have a significant economic impact on a substantial number of small entities under the criteria of the Regulatory Flexibility Act.

List of Subjects in 14 CFR part 71

Airspace, Incorporation by reference, Navigation (air).

Adoption of the Amendment

In consideration of the foregoing, the Federal Aviation Administration amends 14 CFR part 71 as follows:

PART 71—[AMENDED]

1. The authority citation for 14 CFR part 71 continues to read as follows:

Authority: 49 U.S.C. app. 1348(a), 1354(a), 1510; E.O. 10854; 24 FR 9565, 3 CFR 1959–1963 Comp., p. 389; 49 U.S.C. 106(g); 14 CFR 11.69.

§ 71.1 [Amended]

2. The incorporation by reference in 14 CFR 71.1 of the Federal Aviation Administration Order 7400.9B, *Airspace Designations and Reporting Points*, dated July 18, 1994, and effective September 16, 1994, is amended as follows:

Paragraph 5000 General

* * * * *

ASW LA D New Orleans NAS, Alvin Callender Field, LA [Revised]

New Orleans NAS, Alvin Callender Field, LA
(Lat. 29°049′31″ N., long. 90°002′06″ W.)
Harvey VORTAC
(Lat. 29°051′01″ N., long. 90°000′10″ W.)

That airspace extending upward from the surface to and including 2,500 feet MSL within a 4.7-mile radius of New Orleans NAS Alvin Callender Field and within 1.3 miles each side of the 228° radial of the Harvey VORTAC extending from the 4.7-mile radius to 5.6 miles southwest of the airport and within 1.3 miles each side of the 058° radial of the Harvey VORTAC extending from the 4.7 mile radius to 6 miles northeast of the airport excluding that airspace within the New Orleans, LA, Class B airspace area.

* * * * *

Issued in Fort Worth, TX on May 11, 1995.

Larry D. Gray,

Manager, Air Traffic Division, Southwest Region.

[FR Doc. 95–13014 Filed 5–25–95; 8:45 am]

BILLING CODE 4910–13–M

---

14 CFR Part 71

[Airspace Docket No. 94–ASW–19]

Establishment and Revision of Class E Airspace; Fayetteville, AR

AGENCY: Federal Aviation Administration (FAA), DOT.

ACTION: Final rule.

SUMMARY: This action establishes Class E airspace extending upward from the surface as an extension to the Class D airspace at Drake Field, Fayetteville, AR. Additionally, this action revises the Class E airspace extending upward from 700 fee above ground level (AGL) at Drake Field, Fayetteville, AR. The development of a new Microwave Landing System (MLS) standard instrument approach procedure (SIAP) has made this action necessary. This action is intended to provide adequate Class E airspace to contain instrument flight rule (IFR) operations for aircraft executing the MLS SIAP at Drake Field, Fayetteville, AR.

EFFECTIVE DATE: 0901 UTC, July 20, 1995.

FOR FURTHER INFORMATION CONTACT: Donald J. Day, System Management Branch, Air Traffic Division, Southwest Region, Federal Aviation Administration, Fort Worth, TX 76193–0530, telephone 817–222–5593.

SUPPLEMENTARY INFORMATION:

History

On December 16, 1994, a proposal to amend part 71 of the Federal Aviation Regulations (14 CFR part 71) to establish and amend the Class E airspace at Fayetteville, AR, was published in the **Federal Register** (59 FR 64879). A MLS SIAP developed for Drake Field, Fayetteville, AR, requires additional Class E airspace from the surface to 700 feet AGL as an extension to the Class D airspace presently established at this airport. Additionally, the proposal was to revise the controlled airspace extending upward from 700 feet AGL to contain IFR operations in controlled airspace during portions of the terminal operation and while transitioning between the enroute and terminal environments.

Interested parties were invited to participate in this rulemaking proceeding by submitting written comments on the proposal to the FAA. No comments to the proposal were received. Therefore the rule is adopted as proposed.

The coordinates for this airspace docket are based on North American Datum 83. Class E airspace designations for airspace areas extending upward from 700 feet or more AGL are published in Paragraph 6005 of FAA Order 7400.9B dated July 18, 1994, and effective September 16, 1994, which is incorporated by reference in 14 CFR 71.1. The Class E airspace designation listed in this document will be published subsequently in the Order.

The Rule

This amendment to part 71 of the Federal Aviation Regulations (14 CFR part 71) establishes new controlled airspace and revises the Class E airspace

located at Drake Field, Fayetteville, AR, to provide controlled airspace for aircraft executing the MLS SIAP.

The FAA has determined that this regulation only involves an established body of technical regulations that need frequent and routine amendments to keep them operationally current. It, therefore—(1) is not a ''significant regulatory action'' under Executive Order 12866; (2) is not a ''significant rule'' under DOT Regulatory Policies and Procedures (44 FR 11034; February 26, 1979); and (3) does not warrant preparation of a regulatory evaluation as the anticipated impact is so minimal. Since this is a routine matter that will only affect air traffic procedures and air navigation, it is certified that this rule will not have a significant economic impact on a substantial number of small entities under the criteria of the Regulatory Flexibility Act.

List of Subjects in 14 CFR Part 71

Airspace, Incorporation by reference, Navigation (air).

Adoption of the Amendment

In consideration of the foregoing, the Federal Aviation Administration amends 14 CFR part 71 as follows:

PART 71—[AMENDED]

1. The authority citation for 14 CFR part 71 continues to read as follows:

Authority: 49 U.S.C. app. 1348(a), 1354(a), 1510; E.O. 10854; 24 FR 9565, 3 CFR, 1959–1963 Comp., p. 389; 49 U.S.C. 106(g); 14 CFR 11.69.

§ 71.1 [Amended]

2. The incorporation by reference in 14 CFR 71.1 of the Federal Aviation Administration Order 7400.9B, *Airspace Designations and Reporting Points,* dated July 18, 1994, and effective September 16, 1994, is amended as follows:

Paragraph 6004 Class E airspace areas designated as an extension to a Class D surface area

* * * * *

ASW AR E4 Fayetteville, Drake Field, AK [New]

Fayetteville, Drake Field, AK
(Lat. 36°00′18″ N., long. 94°10′12″ W.)
Fayetteville MLS
(Lat. 35°59′59″ N., long. 94°10′05″ W.)

That airspace extending upward from the surface within 3 miles each side of the MLS 354° course inbound extending from the 4.1-mile radius of the airport to 12 miles south of the airport.

* * * * *

Paragraph 6005 Class E Airspace Areas Extending upward From 700 Feet or More Above the Surface of the Earth

* * * * *

ASW AR E5 Fayetteville, AR [Revised]

Point of Origin
(lat. 36°12′00″ N., long. 94°14′01″ W.)
Fayetteville MLS
(lat. 35°59′59″ N., long. 94°10′05″ W.)

That airspace extending upward from 700 feet above the surface within 8 miles west and 4 miles east of the MLS 354° course inbound extending from the 23.9-mile radius of the point of origin to the 33.4-mile radius of the point of origin.

* * * * *

Issued in Fort Worth, TX, on May 11, 1995.

Larry D. Gray,

Manager, Air Traffic Division, Southwest Region.

[FR Doc. 95–13015 Filed 5–25–95; 8:45 am]

BILLING CODE 4910–13–M

---

14 CFR Part 71

[Airspace Docket No. 94–ASW–20]

Revision of Class E Airspace; Laredo, TX

AGENCY: Federal Aviation Administration (FAA), DOT.

ACTION: Final rule.

SUMMARY: This action revised the Class E airspace extending upward from 700 feet above ground level (AGL) at Laredo International Airport, Laredo, TX. The development of a revised standard instrument approach procedure (SIAP) to Runway (RWY) 14 has made this action necessary. Controlled airspace extending upward from 700 feet AGL is needed to contain aircraft executing the SIAP. This action is intended to provide adequate Class E airspace to contain instrument flight rule (IFR) operations for aircraft executing the Very High Frequency Omnidirectional Range/Distance Measuring Equipment (VOR/DME) or Tactical Air Navigation (TACAN) or Global Positioning System (GPS) SIAP to RWY 14 at Laredo International Airport, Laredo, TX.

EFFECTIVE DATE: 0901 UTC, July 20, 1995.

FOR FURTHER INFORMATION CONTACT: Donald J. Day, System Management Branch, Air Traffic Division, Southwest Region, Federal Aviation Administration, Fort Worth, TX 76193–0530, telephone 817–222–5593.

SUPPLEMENTARY INFORMATION:

History

On December 16, 1994, a proposal to amend part 71 of the Federal Aviation Regulations (14 CFR part 71) to revise the Class E airspace at Laredo, TX, was published in the **Federal Register** (59 FR 64880). A revised VOR/DME or TACAN or GPS RWY 14 SIAP developed for Laredo Municipal Airport, Laredo, TX, requires the revision of the Class E airspace at this airport. The proposal was to revise the controlled airspace extending upward from 700 feet AGL to contain IFR operations in controlled airspace during portions of the terminal operation and while transitioning between the enroute and terminal environments. However, the proposal was published with an incorrect bearing citation in the description of the airspace. The proposed description of Class E airspace referred incorrectly to the 189° bearing of the Laredo VORTAC. The correct bearing should have been the 181° bearing of the Laredo VORTAC. The description of the Class E airspace in this rule has been revised to reflect this change. The FAA has determined that this change is editorial in nature and will not increase the scope of this rule.

Interested parties were invited to participate in this rulemaking proceeding by submitting written comments on the proposal to the FAA. No comments to the proposal were received. Except for the non-substantive change just discussed, the rule is adopted as proposed.

The coordinates for this airspace docket are based on North American Datum 83. Class E airspace designations for airspace areas extending upward from 700 feet or more AGL are published in Paragraph 6005 of the FAA Order 7400.9B dated July 18, 1994, and effective September 16, 1994, which is incorporated by reference in 14 CFR 71.1. The Class E airspace designation listed in this document will be published subsequently in the Order.

The Rule

This amendment to part 71 of the Federal Aviation Regulations (14 CFR part 71) establishes the Class E airspace located at Laredo International Airport, Laredo, TX, to provide controlled airspace extending upward from 700 feet AGL for aircraft executing the VOR/DME or TACAN or GPS RWY 14 SIAP.

The FAA has determined that this regulation only involves an established body of technical regulations that need frequent and routine amendments to keep them operationally current. It, therefore—(1) Is not a ''significant regulatory action'' under Executive Order 12866; (2) is not a ''significant rule''; under DOT Regulatory Policies and Procedures (44 FR 11034; February 26, 1979); and (3) does not warrant preparation of a regulatory evaluation as

the anticipated impact is so minimal. Since this is a routine matter that will only affect air traffic procedures and air navigation, it is certified that this rule will not have a significant economic impact on a substantial number of small entities under the criteria of the Regulatory Flexibility Act.

List of Subjects in 14 CFR Part 71

Airspace, Incorporation by reference, Navigation (air).

Adoption of the Amendment

In consideration of the foregoing, the Federal Aviation Administration amends 14 CFR part 71 as follows:

PART 71—[AMENDED]

1. The authority citation for 14 CFR part 71 continues to read as follows:

Authority: 49 U.S.C. app. 1348(a), 1354(a), 1510; E.O. 10854; 24 FR 9565, 3 CFR, 1959–1963 Comp., p. 389; 49 U.S.C. 106(g); 14 CFR 11.69.

§ 71.1 [Amended]

2. The incorporation by reference in 14 CFR 71.1 of the Federal Aviation Administration Order 7400.9B, *Airspace Designations and Reporting Points,* dated July 18, 1994, and effective September 16, 1994, is amended as follows:

Paragraph 6005 Class E Airspace Areas Extending Upward From 700 Feet or More Above the Surface of the Earth

* * * * *

ASW TX E5 Laredo, TX [Revised]

Laredo International Airport, TX
(Lat. 27°32′41″ N, long. 99°27′41″ W)
Laredo VORTAC
(Lat. 27°28′44″ N, long. 99°25′04″ W)
Laredo, Rancho Blanco Airport, TX
(Lat. 27°18′31″ N, long. 99°28′53″ W)
Laredo Auxiliary No. 2 Airport, TX
(Lat. 27°28′33″ N, long. 99°13′32″ W)

That airspace extending upward from 700 feet above the surface within a 7.8-mile radius of Laredo International Airport and within 4.0 miles each side of the 328° bearing of the Laredo VORTAC extending from the 7.8-mile radius to 18.0 miles northwest of the Laredo VORTAC and within a 6.6-mile radius of Rancho Blanco Airport and within 1.6 miles each side of the 181° bearing of the Laredo VORTAC extending from the 6.6-mile radius to 12.1 miles north of the airport and within a 6.8-mile radius of Laredo Auxiliary No. 2 Airport excluding that airspace in Mexico.

* * * * *

Issued in Forth Worth, TX, on May 11, 1995.

Larry D. Gray,

Manager, Air Traffic Division, Southwest Region.

[FR Doc. 95–13016 Filed 5–25–95; 8:45 am]

BILLING CODE 4910–13–M

---

14 CFR Part 71

[Airspace Docket No. 94–ASW–16]

Establishment of Class E Airspace; Ozona, TX

AGENCY: Federal Aviation Administration (FAA), DOT.

ACTION: Final rule.

SUMMARY: This action establishes Class E airspace extending upward from 700 feet above ground level (AGL) at Ozona Municipal Airport, Ozona, TX. The development of a Global Positioning System (GPS) standard instrument approach procedure (SIAP) to Runway (RWY) 16 has made this action necessary. Controlled airspace extending upward from 700 feet above ground level (AGL) is needed to contain aircraft executing the SIAP. This action is intended to provide adequate Class E airspace to contain instrument flight rule (IFR) operations for aircraft executing the SIAP at Ozona Municipal Airport, Ozona, TX.

EFFECTIVE DATE: 0901 UTC, July 20, 1995.

FOR FURTHER INFORMATION CONTACT: Donald J. Day, System Management Branch, Air Traffic Division, Southwest Region, Federal Aviation Administration, Forth Worth, TX 76193–0530, telephone 817–222–5593.

SUPPLEMENTARY INFORMATION:

History

On December 5, 1994, a proposal to amend part 71 of the Federal Aviation Regulations (14 CFR part 71) to establish the Class E airspace at Ozona, TX, was published in the **Federal Register** (59 FR 62364). A GPS SIAP developed for Ozona Municipal Airport, Ozona, TX, requires Class E airspace. The proposal was to revise the controlled airspace extending upward from 700 feet AGL to contain IFR operations in controlled airspace during portions of the terminal operation and while transitioning between the enroute and terminal environments.

Interested parties were invited to participate in this rulemaking proceeding by submitting written comments on the proposal to the FAA. No comments to the proposal were received. Therefore, the rule is adopted as proposed.

The coordinates for this airspace docket are based on North American Datum 83. Class E airspace designations for airspace areas extending upward from 700 feet or more AGL are published in Paragraph 6005 of FAA Order 7400.9B dated July 18, 1994, and effective September 16, 1994, which is incorporated by reference in 14 CFR 71.1. The Class E airspace designation listed in this document will be published subsequently in the Order.

The Rule

This amendment to part 71 of the Federal Aviation Regulations (14 CFR part 71) establishes the Class E airspace located at Ozona Municipal Airport, Ozona, TX, to provide controlled airspace extending upward from 700 feet AGL for aircraft executing the GPS RWY 16 SIAP.

The FAA has determined that this regulation only involves an established body of technical regulations that need frequent and routine amendments to keep them operationally current. It, therefore—(1) is not a ''significant regulatory action'' under Executive Order 12866; (2) is not a ''significant rule'' under DOT Regulatory Policies and Procedures (44 FR 11034; February 26, 1979); and (3) does not warrant preparation of a regulatory evaluation as the anticipated impact is so minimal. Since this is a routine matter that will only affect air traffic procedures and air navigation, it is certified that this rule will not have a significant economic impact on a substantial number of small entities under the criteria of the Regulatory Flexibility Act.

List of Subjects in 14 CFR Part 71

Airspace, Incorporation by reference, Navigation (air).

Adoption of the Amendment

In consideration of the foregoing, the Federal Aviation Administration amends 14 CFR part 71 as follows:

PART 71—[AMENDED]

1. The authority citation for 14 CFR part 71 continues to read as follows:

Authority: 49 U.S.C. app. 1348(a), 1354(a), 1510; E.O. 10854; 24 FR 9565, 3 CFR, 1959–1963 Comp., p. 389; 49 U.S.C. 106(g); 14 CFR 11.69.

§ 71.1 [Amended]

2. The incorporation by reference in 14 CFR 71.1 of the Federal Aviation Administration Order 7400.9B, *Airspace Designations and Reporting Points,* dated July 18, 1994, and effective September 16, 1994, is amended as follows:

Paragraph 6005 Class E Airspace Areas Extending Upward From 700 Feet or More Above the Surface of the Earth

* * * * *

ASW TX E5 Ozona, TX [New]

Ozona, Ozona Municipal Airport, TX (lat. 30°44′06″ N., long. 101°12′10″ W.)

That airspace extending upward from 700 feet above the surface within a 6.5-mile radius of Ozona Municipal Airport.

* * * * *

Issued in Fort Worth, TX, on May 11, 1995.

Larry D. Gray,

Manager, Air Traffic Division, Southwest Region.

[FR Doc. 95–13017 Filed 5–25–95; 8:45 am]

BILLING CODE 4910–13–M

DEPARTMENT OF ENERGY

Federal Energy Regulatory Commission

18 CFR Part 2

[Docket No. RM93–19–001]

Inquiry Concerning the Commission's Pricing Policy for Transmission Services Provided by Public Utilities Under the Federal Power Act

Issued May 22, 1995.

AGENCY: Federal Energy Regulatory Commission.

ACTION: Final rule; order on reconsideration and clarifying policy statement.

SUMMARY: The Commission in its Transmission Pricing Policy Statement, issued on October 26, 1994, announced a new policy regarding the pricing of transmission services provided by public utilities and transmitting utilities under the Federal Power Act that allows greater transmission pricing flexibility than was allowed under previous Commission policies. The Commission traditionally had allowed only postage-stamp, contract-path pricing. the Policy Statement announced that the Commission also will allow a variety of other pricing methods that may be more suitable for competitive wholesale power markets, including distance-sensitive and flow-based pricing. In response to filings by certain entities, the Commission is denying requests for reconsideration of the Policy Statement; however, the Commission is clarifying certain matters concerning non-conforming transmission pricing proposals.

EFFECTIVE DATE: This order is effective as of May 22, 1995.

FOR FURTHER INFORMATION CONTACT:

Deborah B. Leahy, Office of the General Counsel, Federal Energy Regulatory Commission, 825 North Capitol Street NE, Washington, D.C. 20426, Telephone: (202) 208–2039, (legal issues)

Stephen J. Henderson, Office of Economic Policy, Federal Energy Regulatory Commission, 825 North Capitol Street NE, Washington, D.C. 20426, Telephone: (202) 208–0100, (technical issues)

SUPPLEMENTARY INFORMATION: In addition to publishing the full text of this document in the **Federal Register**, the Commission also provides all interested persons an opportunity to inspect or copy the contents of this document during normal business hours in Room 3104, at 941 North Capitol Street, N.E., Washington, D.C. 20426.

The Commission Issuance Posting System (CIPS), an electronic bulletin board service, provides access to the texts of formal documents issued by the Commission. CIPS is available at no charge to the user and may be accessed using a personal computer with a modem by dialing (202) 208–1397. To access CIPS, set your communications software to 19200, 14400, 12000, 9600, 7200, 4800, 2400, 1200 or 300 bps, full duplex, no parity, 8 data bits and 1 stop bit. The full text of this document will be available on CIPS for 60 days from the date of issuance in ASCII and WordPerfect 5.1 format. After 60 days the document will be archived, but still accessible. The complete text on diskette in WordPerfect format may also be purchased from the Commission's copy contractor, La Dorn Systems Corporation, also located in Room 3104, 941 North Capitol Street NE., Washington, D.C. 20426.

Order on Reconsideration and Clarifying Policy Statement

Issued May 22, 1995.

On October 26, 1994, the Commission issued a Transmission Pricing Policy Statement.[1] We announced a new policy regarding the pricing of transmission services provided by public utilities and transmitting utilities under the Federal Power Act (FPA) that allows greater transmission pricing flexibility than was allowed under previous Commission policies. The Commission traditionally had allowed only postage-stamp, contract-path pricing. The Policy Statement announced that the Commission also will allow a variety of other pricing methods that may be more suitable for competitive wholesale power markets, including distance-sensitive and flow-based pricing.

The Policy Statement identified five principles for evaluating transmission pricing proposals. The first principle is that transmission pricing should conform to the traditional embedded cost revenue requirement. However, the Commission also provided procedures whereby utilities can propose rates that do not conform to the traditional revenue requirement and thus do not meet the first principle, *i.e.*, non-conforming proposals. The second principle requires that any new transmission pricing proposal, conforming or non-conforming, must meet the Commission's comparability standard.[2] The remaining three principles (concerning economic efficiency, fairness, and practicality) reflect goals that an applicant must try to meet, but that may need to be balanced against one another in the Commission's determination of whether the proposed rates are just and reasonable.

On November 22, 1994, the Vermont Department of Public Service (Vermont Department) filed a request for reconsideration of the Commission's decision to treat opportunity cost pricing as a form of marginal cost pricing consistent with comparability principles. On November 23, 1994, the American Forest and Paper Association (American Forest and Paper) filed a request for rehearing and motion for reconsideration concerning several aspects of the Policy Statement. American Forest and Paper asks the Commission to replace the Policy Statement with a Notice of Proposed Rulemaking. Further, it opposes the Commission's decision to allow opportunity cost pricing and marginal

[1] *Inquiry Concerning the Commission's Pricing Policy for Transmission Services Provided by Public Utilities Under the Federal Power Act,* Policy Statement, III FERC Stats. & Regs. ¶ 31,005 (1994); 59 FR 55031, Nov. 3, 1994. (Policy Statement).

[2] *See* American Electric Power Service Corporation (*AEP*), 67 FERC ¶ 61,168 (1994), *reh'g pending.* The comparability standard generally provides that ''[a]n open access tariff that is not unduly discriminatory or anticompetitive should offer third parties access on the same or comparable basis, and under the same or comparable terms and conditions, as the transmission provider's uses of its system.'' *Id.* at 61,490. The Commission explained in the Policy Statement that comparability of service applies to price as well as to terms and conditions. Policy Statement at 31,142. The Commission recently issued a Notice of Proposed Rulemaking in which it proposes to require all public utilities to have on file non-discriminatory open access transmission tariffs and provides guidance on the comparability standard. *See* Promoting Wholesale Competition Through Open Access Non-discriminatory Transmission Services by Public Utilities; Recovery of Stranded Costs by Public Utilities and Transmitting Utilities, Docket Nos. RM95–8–000 and RM94–7–001, Notice of Proposed Rulemaking, 60 FR 17662 (Apr. 7, 1995), IV FERC Stats. & Regs. ¶ 32,514 (1995) (Open Access NOPR).

cost pricing. In addition, it asks the Commission to clarify that non-conforming proposals are subject to the notice and filing requirements of the FPA. Also on November 23, 1994, Catex Vitol Electric, Inc. (Catex) filed a request for reconsideration. Catex argues, among other things, that a generic approach specifying a standard method of transmission pricing is preferable to a case-by-case approach that allows experimentation.[3]

As discussed below, the requests for reconsideration of the Policy Statement are denied.[4] However, the Commission clarifies certain matters concerning non-conforming transmission pricing proposals.

Discussion

A. Policy Statement or Rulemaking

American Forest and Paper and Catex support a generic approach to transmission pricing in lieu of the case-by-case approach envisioned in the Policy Statement. American Forest and Paper argues that the Policy Statement will increase uncertainty concerning transmission rates and thus inhibit the development of competitive power markets. It contends that the Policy Statement will allow utilities to propose widely varying tariffs that will make it difficult for a prospective customer to calculate transmission rates. American Forest and Paper and Catex argue that the customer will be forced to bear litigation costs and to wait until the completion of rate proceedings and any court review to know with certainty what rates, terms and conditions will be in effect. By that time, the customer may have lost the opportunity to win a competitive bid or otherwise finalize a long-term power plant financing. American Forest and Paper also argues that the Policy Statement will create a heavy administrative burden because the Commission will be required to adjudicate a high number of transmission rate cases. It requests that the Commission replace the Policy Statement with a Notice of Proposed Rulemaking of greater specificity.

Catex similarly asks the Commission to consider adopting a generic approach to transmission pricing, arguing that transmitting utilities will use the case-by-case approach to file experimental tariffs that will inhibit the transition to competition and open access. It submits that power marketers may be foreclosed for economic reasons from participating in all of the rate cases that they deem important. Catex also argues that the case-by-case approach will create a patchwork of rate structures that will make it difficult for transmission customers to arrange multi-utility transactions or calculate rates.

While we understand the concerns voiced by American Forest and Paper and Catex, we nevertheless do not believe that a ''simple, generic approach to transmission pricing''[5] is advisable. As we noted in the Policy Statement, there was a strong consensus among the 165 entities from whom the Commission received comments that we should allow greater pricing flexibility. We provided several reasons in the Policy Statement why greater pricing flexibility is required.[6] First, exclusive use of methods that worked reasonably well in the past does not provide sufficient flexibility to accommodate the evolving needs of transmission owners and users in a more competitive era. Second, our existing ''or'' pricing policy may not always encourage the most efficient investments in and use of the transmission grid. Third, regional differences, such as power flow patterns and population densities, justify a more flexible policy that can account for such differences. Fourth, a more flexible pricing policy may be necessary to implement effectively our regional transmission group (RTG) policy, which encourages RTGs to deal with a broad range of issues, including pricing, and which indicates that the Commission will afford deference to RTG decision-making.

Our conclusion at this juncture in the transition to competitive bulk power markets is that, if the pricing flexibility envisioned in the Policy Statement is to be achieved, a case-by-case approach to transmission pricing, not a generic approach, is appropriate. As a result, we will deny the requests of American Forest and Paper and Catex to replace the Policy Statement with a generic proceeding.

With regard to the concerns of American Forest and Paper and Catex as to transmission pricing certainty, as the Policy Statement makes clear, the Commission, too, supports pricing certainty. Indeed, the Policy Statement states that the comparability principle includes comparable pricing certainty.[7] In addition, the fifth pricing principle is that transmission pricing should be practical and as easy to administer as appropriate given the other pricing principles. The Policy Statement recognizes, however, that certain of the Commission's goals may have to be balanced against one another. For example, we recognize the inevitability of tradeoffs between the sometimes competing goals of simplicity and better price signals.[8] Some pricing proposals may be so complex that they are difficult to understand and analyze. The Policy Statement indicates that while such complexity is not fatal, it should be balanced by efficiency gains or other advantages.[9]

B. Opportunity Cost and Marginal Cost Pricing

In the Policy Statement, the Commission explained that when the transmission grid is constrained and a utility chooses not to expand its system, we have allowed the utility to charge transmission-only customers the higher of embedded costs or legitimate and verifiable opportunity costs, but not the sum of the two (''or'' pricing). The opportunity costs are capped by incremental expansion costs.[10] The Policy Statement reflects the Commission's support for the use of marginal cost pricing to promote efficient decision-making by both transmission owners and users. It states that, to the extent practicable,

[3] On November 28, 1994, the Rural Utilities Service (RUS), a credit agency in the U.S. Department of Agriculture, filed comments in response to the Policy Statement. RUS asks the Commission to consider the impact of transmission pricing decisions on the RUS electric program, under which RUS provides low-cost financial assistance to rural electric distribution and power generation and transmission cooperatives pursuant to the Rural Electrification Act (RE-Act). RUS suggests, for example, that in considering pricing mechanisms involving RUS borrowers, the Commission should not permit non-RE-Act beneficiaries to get the benefit of RUS loan subsidies to the detriment of RUS borrowers. Although styled as comments, RUS's pleading was submitted after the deadline for comments in this proceeding had closed. Accordingly, we will treat RUS's pleading as a motion for reconsideration and deny it because we believe the issues raised by RUS are best addressed on a case-by-case basis as they may arise in connection with a particular transmission pricing proposal.

[4] We stated in the Policy Statement that we would accept motions for reconsideration to help us refine the principles established therein and to provide an opportunity to respond to any questions or clarify any ambiguity. Policy Statement at 31,150. Although American Forest and Paper styled its pleading as both a request for rehearing and a motion for reconsideration, we will treat it as a motion for reconsideration only, as we find that rehearing does not lie. First, contrary to American Forest and Paper's argument that the Policy Statement has the force of a final rule ''because it changes the filing requirements for electric transmission rates'' (American Forest and Paper pleading at 1 n.1), as discussed below, the Policy Statement makes no such change in the filing requirements. Second, we find that rehearing does not lie because the Policy Statement constitutes a general statement of policy to be applied to transmission pricing proposals submitted in individual cases. *See, e.g., Pacific Gas & Electric Company* v. *FPC,* 506 F.2d 33 (D.C. Cir. 1974).

[5] Catex pleading at 2.

[6] Policy Statement at 31,139.

[7] *Id.* at 31,143.

[8] *Id.* at 31,139.

[9] *Id.* at 31,144.

[10] *Id.* at 31,138.

transmission rates should be designed to reflect marginal costs, rather than embedded costs, in a manner consistent with the remaining pricing principles. As we explained, when lines are not congested, marginal transmission costs are primarily line losses. When lines are congested, marginal transmission costs are opportunity costs.[11]

The Vermont Department asks us to reconsider our holding that opportunity cost pricing is a form of marginal cost pricing consistent with comparability principles. It argues that opportunity cost pricing is not marginal cost pricing because marginal cost pricing contemplates that all customers will be assessed the same marginal cost price and because opportunity costs are inherently unverifiable. The Vermont Department further contends that opportunity cost pricing makes rates unpredictable, contrary to the comparability requirement.[12] The Vermont Department requests that the Commission either find that opportunity cost pricing is inconsistent with the comparability standard or provide that filings proposing opportunity cost pricing will be treated as non-conforming proposals.

American Forest and Paper similarly urges the Commission to reconsider whether utilities should be permitted to propose opportunity cost pricing. It argues that opportunity cost pricing is unfair and anticompetitive. According to American Forest and Paper, the requirement that the utility charge itself the same opportunity costs as it charges others is unenforceable because the determination that opportunity costs exist is a subjective decision made by the utility.

American Forest and Paper also opposes the use of marginal cost pricing, arguing that it will not create efficient transmission and generation siting decisions, as anticipated by the Policy Statement, in the absence of a competitive market for transmission. It suggests that the expansion of transmission capacity and the location of new generators and new load will be based on critical environmental, fuel supply, and siting factors rather than on marginal cost-based transmission rates.

We stand by our policy of allowing utilities to include opportunity cost charges in their transmission rates. The rationale for that policy is discussed in the Policy Statement, is set forth in prior Commission orders, and has been affirmed by the Court of Appeals for the District of Columbia Circuit.[13]

Moreover, because any new transmission pricing proposal, whether conforming or non-conforming, must meet the comparability standard, we will have ample opportunity to address any concerns that opportunity cost pricing may be unfair and anticompetitive or otherwise inconsistent with the comparability standard in the course of our evaluation of a particular transmission pricing proposal. With regard to the Vermont Department's argument that opportunity cost pricing is not the equivalent of marginal cost pricing because marginal cost pricing contemplates that all customers will be charged the same price, we do not agree that marginal cost pricing requires that all customers be charged the same price. [14]

With regard to American Forest and Paper's opposition to marginal cost pricing, while we agree that environmental, fuel supply, and siting factors are important considerations in the expansion of transmission capacity and the location of new generators and load, we also believe that providing more efficient price signals through the use of marginal cost pricing can influence efficient siting decisions. As we make clear in the Policy Statement, we believe that marginal cost pricing will promote efficient decision-making by both transmission owners and users. [15] As a result, we encourage experimentation regarding marginal cost pricing proposals, but we expect such proposals to be fully supported. In the end, the Commission will determine the appropriateness of marginal cost pricing proposals on a case-by-case basis.

C. Procedures For Filing Non-Conforming Proposals

American Forest and Paper argues that two of the procedures in the Policy Statement relating to non-conforming proposals may be inconsistent with the FPA. First, it notes that the Policy Statement would permit a utility to submit a non-conforming proposal in the form of a petition for declaratory order. However, American Forest and Paper suggests that the FPA requires utilities to file and support proposed changes in rates and requires ''a hearing in which [the utilities'] customers can be afforded due process of law.'' [16] Second, American Forest and Paper objects that the Policy Statement would improperly exempt non-conforming proposals from the notice provisions of section 205. It asks the Commission to clarify that the FPA controls the notice and filing requirements for utilities submitting non-conforming proposals.

The clarification that American Forest and Paper seeks concerning non-conforming proposals submitted via a petition for declaratory order is unnecessary. A non-conforming proposal that is submitted in a petition for declaratory order will be subject to a notice and comment period. If, at the end of the declaratory order proceeding, the Commission finds that a non-conforming pricing proposal meets the statutory criteria, the Policy Statement provides that ''the utility would still need to file a rate reflecting the proposal pursuant to FPA section 205.'' [17] As the Policy Statement suggests, ''[p]resumably the section 205 proceeding would be straightforward (*i.e.* akin to a compliance filing) * * * since the Commission would have already addressed the merits of the proposal in the declaratory order.'' [18] However, such a non-conforming proposal would, in any event, be subject to the notice and filing requirements, and opportunity for hearing, under section 205.

With regard to non-conforming proposals submitted under section 205 in conjunction with conforming proposals, the Policy Statement provides that ''[t]he conforming proposal would be subject to the notice and suspension procedures of section 205. The non-conforming proposal would not.'' [19] The phrase ''notice and suspension procedures of section 205'' was intended to refer to those provisions of section 205 that require a public utility to give 60 days' notice to the Commission and the public before making a rate change and that permit the Commission to suspend the effective

[11] *Id.* at 31,143.

[12] The Vermont Department notes that the Policy Statement provides that comparability of pricing includes certainty of pricing and that a transmission customer should have the same price certainty as does the transmitting utility. Policy Statement at 31,143. The Vermont Department (as well as American Forest and Paper) argue that price certainty is particularly important in light of the court's decision in *Cajun Electric Power Cooperative, Inc.* v. *FERC,* F.3d 173 (D.C. Cir. 1994).

[13] *See, e.g.,* Policy Statement at 31,137–38; Pennsylvania Electric Company, 58 FERC ¶ 61,278, *reh'g denied and pricing policy clarified,* 60 FERC ¶ 61,034, *reh'g denied,* 60 FERC ¶ 61,244 (1992), *affirmed sub nom. Pennsylvania Electric Company* v. *FERC,* 11 F.3d 207 (D.C. Cir. 1993).

[14] Marginal cost pricing could be implemented either by charging all customers the same price or by charging a customer for marginal costs at the time it signs a contract. Under the contract version of marginal cost pricing, customers who sign contracts at different times would be charged different prices.

[15] Policy Statement at 31,143.

[16] American Forest and Paper pleading at 7.

[17] Policy Statement at 31,148.

[18] Id.

[19] Id. at 31,147.

date of such rates. [20] These provisions are not applicable to non-conforming proposals because, as the Policy Statement indicates, a non-conforming proposal will be permitted to go into effect only prospectively from the date the Commission determines that such a pricing proposal meets the statutory requirements. [21] Although American Forest and Paper apparently has interpreted the statement that non-conforming proposals would not be subject to the notice and suspension procedures of section 205 to mean that public utilities would not be required to provide notice of the submission of non-conforming proposals, that was not the Commission's intention. Accordingly, we clarify that any non-conforming proposal submitted in conjunction with a conforming proposal must still be filed with the Commission. As with any rate filing under section 205, the Commission would notice the filing of both pricing proposals (*i.e.*, conforming and non-conforming) and provide a period for public comment.

We also wish to clarify the procedures for filing non-conforming pricing proposals. In the Policy Statement, the Commission described those procedures as follows:

> Any public utility that seeks non-conforming pricing must have on file with the Commission an open access transmission tariff offering comparable services. Such comparability tariff must have been accepted for filing by the Commission before a non-conforming pricing proposal will be considered. Moreover, utilities proposing non-conforming transmission pricing must submit such pricing proposals either: (a) in conjunction with a section 205 conforming transmission pricing proposal (the non-conforming proposal would be reflected as alternative ''pro forma'' rate sheets to the conforming proposal); or (b) in a petition for declaratory order.[22]

The Policy Statement states that, for alternative (a) above, the Commission and interested parties would review the non-conforming proposal in conjunction with review of the companion conforming pricing proposal.

The above-quoted language is somewhat unclear. On one hand, it states that the Commission will not consider a non-conforming proposal unless a comparability tariff has *already* been accepted for filing. On the other hand, it contemplates that a utility may file a non-conforming pricing proposal *simultaneously* with the filing of a conforming pricing proposal—one that has not already been accepted for filing.

We wish to clarify that if a public utility does not already have on file an open access comparability tariff, it may simultaneously file both a conforming pricing proposal and a non-conforming pricing proposal in conjunction with its filing of an open access comparability tariff;[23] however, the non-conforming proposal must consist of ''pro forma'' rate sheets that can take effect, if at all, only on a prospective basis at the end of the section 205 proceeding. If a public utility chooses to submit a non-conforming proposal via a petition for a declaratory order, it must already have a comparability tariff that has been accepted for filing by the Commission.

We also clarify that if a utility already has an open access comparability tariff on file and later seeks to file a non-conforming pricing proposal, the utility can submit the non-conforming proposal either in a section 205 filing or in a petition for a declaratory order. In other words, the utility may submit the non-conforming proposal alone in a section 205 filing, to take effect, if at all, only on a prospective basis at the end of the section 205 proceeding; it does not have to re-file the conforming proposal that already has been accepted or file a new conforming proposal. In any event, the open access comparability tariff must be filed before or simultaneously with the non-conforming proposal.

Similarly, we clarify that if a public utility already has an approved non-conforming proposal and seeks to submit a replacement non-conforming proposal, the utility can submit the new non-conforming proposal either in a section 205 filing, to take effect, if at all, only on a prospective basis at the end of the section 205 proceeding (the utility need not file a conforming proposal) or in a petition for a declaratory order. In those cases in which the utility chooses the declaratory order procedure, and the Commission finds that the utility's proposal meets the statutory criteria, the utility would still need to file a rate reflecting the proposal pursuant to FPA section 205.[24]

We hope that this clarification removes any uncertainty that may have existed regarding the procedures for filing non-conforming pricing proposals. As we noted in the Policy Statement, we believe that those procedures are flexible enough to permit utilities to propose non-conforming pricing innovations which they believe will benefit ratepayers and promote the development of a competitive bulk power market.[25]

In addition to allowing utilities to propose non-conforming pricing proposals, the Policy Statement also allows considerable flexibility in the types of conforming proposals that may be filed. As we stated in the Policy Statement, we anticipate that a wide variety of pricing proposals may be reconciled with the traditional revenue requirement.[26] However, only a few such proposals have been filed to date.[27] Accordingly, we reiterate here that many varieties of cost-based pricing are possible and encourage utilities to consider innovative pricing approaches that conform to the traditional revenue requirement. We anticipate that many utilities will consider filing such pricing proposals in conjunction with non-discriminatory open access (comparability) tariffs that could be filed either prior to issuance of a final rule on open access or in Stage Two proceedings following issuance of any final rule.[28]

D. Miscellaneous

Catex urges the Commission to: (1) emphasize that rates must be simple and predictable; (2) require a utility to give the same transmission rate discounts to a competitor as are given to the utility's affiliates or to support the utility's own sales; (3) avoid subsidies and the loading of fixed costs onto non-firm

[20] See 16 U.S.C. §§ 824d(d),(e); Policy Statement at 31,136.

[21] Policy Statement at 31,136. As the Policy Statement provides, if ''the Commission determines that the alternative, non-conforming rate proposal is acceptable under the FPA, the Commission will allow the utility to make a compliance rate filing, and the rates will be put into effect prospectively.'' Id. at 31,147.

[22] *Id.*

[23] We note that in Entergy Services, Inc., *et al.*, 70 FERC ¶ 61,006 (1995) (*Entergy*), the Commission rejected the non-conforming pricing proposal that Entergy Services, Inc. (Entergy) filed simultaneously with a conforming pricing proposal. The Commission gave three reasons for its decision, one of which was that Entergy's non-conforming proposal was premature because Entergy did not have on file (*i.e.*, accepted by the Commission) an open access tariff offering comparable services. Although our clarification in this order of the procedures for submitting non-conforming pricing proposals eliminates prematurity as a basis for rejecting Entergy's non-conforming proposal, the other two bases remain valid. As a result, our clarification here does not require reversal of the *Entergy* result.

[24] *See* Policy Statement at 31,148.

[25] *Id.* at 31,150.

[26] *Id.* at 31,144–46.

[27] We are aware of only two pricing proposals filed since the issuance of the Policy Statement that propose an alternative to postage-stamp, contract-path pricing. *See* Jersey Central Power & Light Company, *et al.*, Docket No. ER95–791–000; Southern Company Services, Inc., Docket No. ER95–969–000.

[28] Under the Commission's recently proposed Open Access NOPR, if utilities have not filed open access comparability tariffs by the time a final rule is issued, the Commission in Stage One would place on file for such utilities open access tariffs reflecting postage-stamp embedded cost rates. Such utilities could seek a different rate methodology in Stage Two. *See* Open Access NOPR, IV FERC Stats. & Regs. ¶ 32,514 at ____, *mimeo* at 288–95.

transmission rates; and (4) require power pools to meet the comparability standard. We will deny Catex's motion for reconsideration with regard to these issues. The first three issues are already adequately addressed in the pricing principles set forth in the Policy Statement as discussed briefly below. The fourth (*i.e.*, that power pools be required to meet the comparability standard) has already been proposed by the Commission in the Open Access NOPR.[29]

With regard to Catex's request that the Commission emphasize simplicity and predictability in transmission rates, we note that the Policy Statement already reflects the Commission's support of transmission pricing that is simple and predictable. Indeed, one of the Policy Statement's pricing principles is that transmission pricing should be practical. To this end, the Policy Statement provides that a transmission user should be able to calculate how much it will be charged for transmission service.[30] At the same time, however, the Policy Statement recognizes that this principle may need to be balanced on a case-by-case basis against the other pricing principles, such as the principle that transmission pricing should promote economic efficiency. In addition, although Catex contends that charges to a transmission customer should not be raised after the fact, for example, to compensate for loop flows on other systems, the Commission believes that whether a transmission rate should be increased, as opposed to fixed for the term of a transaction, is a matter to be determined based on the facts and circumstances of a particular case.[31]

With regard to Catex's concern about discounts, we note that the Commission historically has prohibited preferential pricing to affiliates.[32] Moreover, such preferential pricing would be inconsistent with the requirement of non-discriminatory open access transmission.[33] As the Policy Statement makes clear, the requirement that transmission pricing must reflect comparability prohibits the transmission owner from selling itself transmission service at a discount.[34]

As to Catex's concern that subsidies be avoided, we reiterate that the Policy Statement provides that, consistent with the principle that transmission pricing must reflect comparability, a transmission owner that uses its own transmission system to make off-system sales should pay for transmission service at the same rate that third-party customers pay for the same service. As a result, a transmission owner is prohibited from selling itself transmission service at a discount that would be subsidized by native load and transmission-only customers.[35] With respect to Catex's concerns about appropriate pricing of non-firm transmission services, the Commission will consider on a case-by-case basis whether non-firm transmission customers are subsidizing other transmission users.

The Commission Orders

(A) The motions for reconsideration of American Forest and Paper, Catex, the Vermont Department, and RUS are hereby denied as set forth in the body of this order.

(B) The Commission's Policy Statement is hereby clarified as set forth in the body of this order.

By the Commission.

Linwood A. Watson, Jr.,

Acting Secretary.

[FR Doc. 95–12990 Filed 5–25–95; 8:45 am]

BILLING CODE 6717–01–P

[29] See Open Access NOPR, IV FERC Stats. & Regs. ¶ 32,514 at ____, *mimeo* at 96–97; 290–91.

[30] Policy Statement at 31,144.

[31] However, we note that our ''or'' policy permits transmission rates to reflect the higher of embedded or opportunity costs and that the calculation of such costs can be on an annual basis. *See* Florida Power & Light Company, 70 FERC ¶ 61,158 at 61,483 (1995), *rehearing pending.*

[32] *See, e.g.*, Heartland Energy Services, Inc., 68 FERC ¶ 61,223 at 62,062–63 (1994); Ocean State Power, 44 FERC ¶ 61,261 at 61,983–85 (1988).

[33] *See AEP*, 67 FERC at 61,490; Open Access NOPR, IV FERC Stats. & Regs. ¶ 32,514 at ____, *mimeo* at 87–88.

[34] Policy Statement at 31,142–43.

[35] *Id.* at 31,142–43.

18 CFR Part 34

[Docket No. RM92–12–000]

Streamlining of Regulations Pertaining to Parts II and III of the Federal Power Act and the Public Utility Regulatory Policies Act of 1978; Technical Amendment to Order No. 575

May 22, 1995.

AGENCY: Federal Energy Regulatory Commission.

ACTION: Final rule; technical amendment.

SUMMARY: The Federal Energy Regulatory Commission is amending the final rule issued on January 13, 1995 (60 FR 5831, Jan. 25, 1995) in this proceeding to correct an error in the ''Worksheet for Computation of Interest Coverage'' contained in 18 CFR 34.4(e).

EFFECTIVE DATE: May 22, 1995.

FOR FURTHER INFORMATION CONTACT: Wayne McDanal, Office of Chief Accountant, Federal Energy Regulatory Commission, 825 North Capitol Street, N.E., Washington, D.C. 20426, (202) 219–2622.

SUPPLEMENTARY INFORMATION:

List of Subjects in 18 CFR Part 34

Electric power, Electric utilities, Reporting and recordkeeping requirements, Securities.

Lois D. Cashell,

Secretary.

Accordingly, Part 34, Chapter I, Title 18 of the *Code of Federal Regulations* is amended as set forth below.

PART 34—APPLICATION FOR AUTHORIZATION OF THE ISSUANCE OF SECURITIES OR THE ASSUMPTION OF LIABILITIES

1. The authority citation for Part 34 continues to read as follows:

Authority: 16 U.S.C. 791a–825r, 2601–2645; 31 U.S.C. 9701; 42 U.S.C. 7101–7352.

§ 34.4 [Amended]

2. In the worksheet in § 34.4(e) the words

''Total Interest Expense ÷ Income Before Interest and Income Taxes = Interest Coverage''

are removed and the words

''Income Before Interest and Income Taxes ÷ Total Interest Expense = Interest Coverage''

are added in their place.

[FR Doc. 95–12988 Filed 5–25–95; 8:45 am]

BILLING CODE 6717–01–M

DEPARTMENT OF THE TREASURY

United States Secret Service

31 CFR Part 413

[1505–AA68]

Closure of Streets

AGENCY: United States Secret Service, Treasury.

ACTION: Final rule.

SUMMARY: Pursuant to 31 U.S.C. 321, 18 U.S.C. 3056, 3 U.S.C. 202, and Treasury Order 170–09, the Secret Service has closed to public vehicular traffic the following streets in order to secure the perimeter of the White House: (i) the segment of Pennsylvania Avenue NW., between Madison Place and Seventeenth Street and; (ii) State Place and the segment of South Executive Avenue that connects into State Place.

DATES: 5:00 a.m. (local time), May 20, 1995.

FOR FURTHER INFORMATION CONTACT: Eric G. Harnischfeger, Special Agent, Office of Government Liaison and Public Affairs, United States Secret Service, 1800 G Street NW., Washington, D.C. 20223, (202) 435–5708.

SUPPLEMENTARY INFORMATION:

Background

In response to the September 12, 1994, plane crash on the South Grounds of the White House, then Secretary of the Treasury Lloyd Bentsen established the White House Security Review (''Review'') to examine the White House security issues in light of this incident. The Review's scope was expanded to include a study of additional security issues raised by a number of subsequent incidents, including the shooting at the White House by Francisco Duran.

The Review issued a classified report that included a number of recommendations. One of the recommendations made by the Review was to close to vehicular traffic Pennsylvania Avenue, N.W., between Madison Place and Seventeenth Street, State Place and the segment of South Executive Avenue that connects into State Place. This recommendation was unanimously endorsed by the Review's Advisory Committee. The affected streets are contained in the National Capital Service Area, a federal enclave consisting of the White House and other federal buildings and property. *See* 40 U.S.C. 136.

This recommendation was based on extensive analysis of classified information by the Review, which ultimately was ''not able to identify any alternative to prohibiting vehicular traffic [on those streets] that would ensure the protection of the President and others in the White House Complex from explosive devices carried by vehicles near the perimeter.''

This final rule[1] implements that recommendation based on that conclusion.

As Director of the United States Secret Service, I find that this action is necessary to provide necessary and appropriate protection for the President, the First Family and those working in or visiting the White House Complex. This urgency has been accelerated by recent events, including the bombing of a Federal building in Oklahoma City.

The portions of those streets affected by this final rule are identified on the following map:

BILLING CODE 4810–42–P

[1] Without regard to whether this action constitutes a rule within the meaning of 5 U.S.C. 551(4), the Department has elected to treat it as such in order to inform the public fully regarding this action.

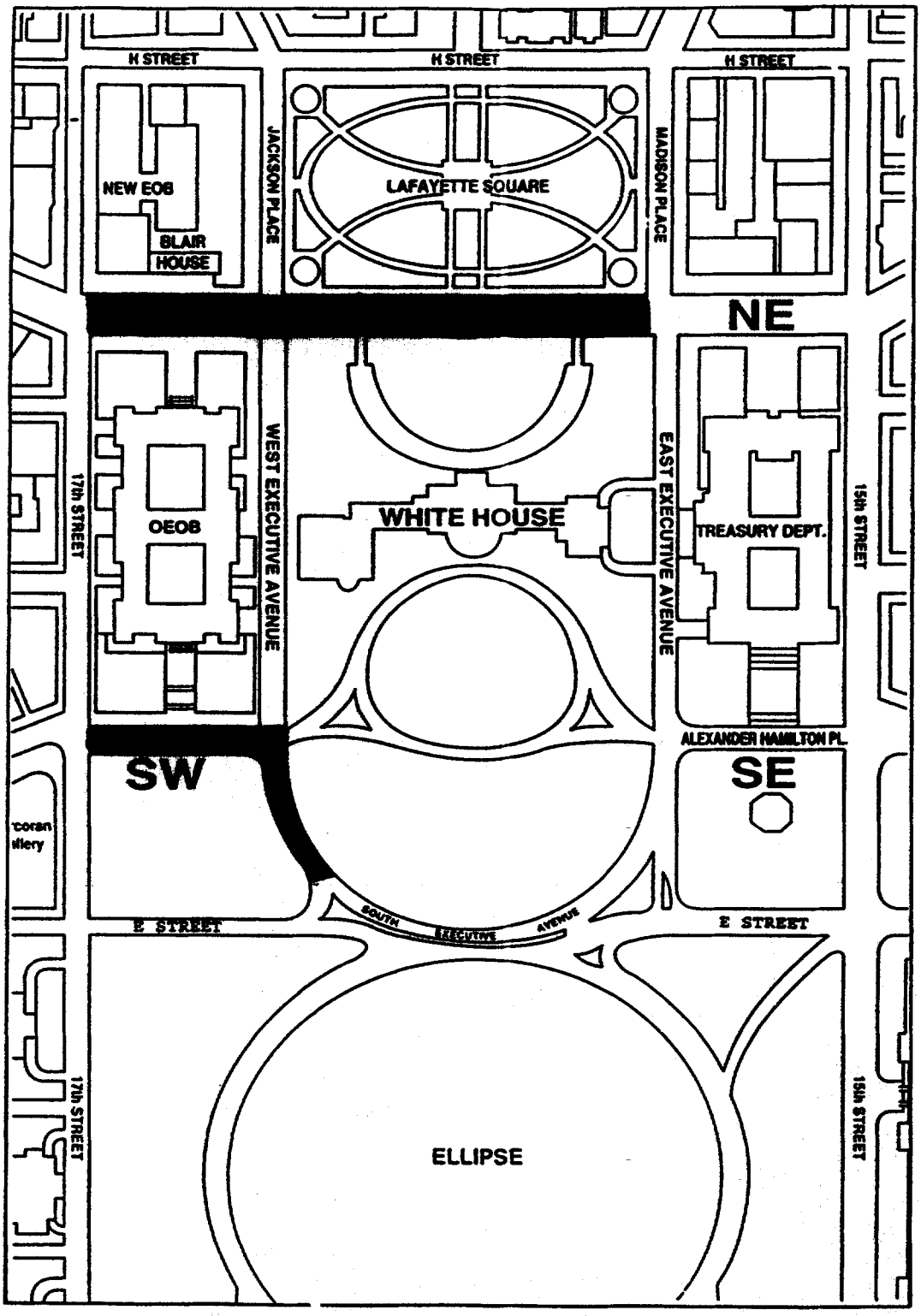

BILLING CODE 4810–42–C

Because this final rule involves a matter relating to public property, notice and public procedure and a delayed effective date are not required pursuant to 5 U.S.C. 553 (a)(2). In addition, pursuant to 5 U.S.C. 553(b)(B), I find that notice and public procedure on this rule is impracticable and contrary to the public interest because any delay in this action will result in an unacceptably high risk of danger to the President, the First Family, and others in the White House Complex. Moreover, any delay in implementing the street closures after the announcement of an intent to take such action would increase these risks. For the same reasons, I find pursuant to 5 U.S.C. 553(d) that there is good cause to waive the 30-day delayed effective date.

It has been determined that this final rule is not a significant regulatory action under Executive Order 12866.

Because no notice of proposed rulemaking is required for this rule, the provisions of the Regulatory Flexibility Act (5 U.S.C. 601) do not apply.

List of Subjects in 31 CFR Part 413

Federal Buildings and Facilities, Security Measures.

For the reasons set out in the preamble, 31 CFR chapter IV is amended as set forth below.

1. Part 413 is added to read as follows:

PART 413—CLOSURE OF STREETS NEAR THE WHITE HOUSE

Sec.
413.1 Closure of Streets.
413.2 Coordination with other Authority.

Authority: 31 U.S.C. 321, 18 U.S.C. 3056, 3 U.S.C. 202, Treasury Order 170–09.

§ 413.1 Closure of Streets.

(a) *District of Columbia.* The following streets in the District of Columbia are closed to public vehicular traffic:

(1) The segment of Pennsylvania Avenue, Northwest, situated between Madison Place, Northwest, and Seventeenth Street, Northwest;

(2) The 1600 block of State Place, Northwest, situated between Seventeenth Street, Northwest, and the White House Complex; and

(3) The segment of South Executive Avenue that connects to the 1600 block of State Place, Northwest.

(b) *Authorized access.* The streets described in paragraph (a) shall remain open to public pedestrian use, official use of the United States, and authorized vehicular access for ingress and egress to the White House Complex and adjacent Federal Buildings.

§ 413.2 Coordination with other authorities.

Nothing in section 413.1 shall be in derogation of any authority conferred upon the Secretary of the Interior, the Secretary of the Treasury or the Director, United States Secret Service.

Dated: May 23, 1995.

Eljay B. Bowron,

Director.

[FR Doc. 95–13007 Filed 5–25–95; 8:45 am]

BILLING CODE 4810–42–P

DEPARTMENT OF TRANSPORTATION

Coast Guard

33 CFR Part 100

[CGD01–95–017]

Special Local Regulation: Harvard-Yale Regatta, Thames River, New London, CT

AGENCY: Coast Guard, DOT.

ACTION: Temporary final rule.

SUMMARY: The annual Harvard-Yale Regatta is a rowing race event held on the Thames River in New London, Connecticut. This regulation temporarily amends the permanent regulation published in 33 CFR 100.101 by changing the time period for the event. These regulations are necessary to control vessel traffic within the immediate vicinity of the event due to the confined nature of the waterway and anticipated congestion at the time of the event, thus providing for the safety of life and property on the affected navigable waters.

EFFECTIVE DATES: This rule is effective from 3:30 p.m. to 8 p.m. on June 10, 1995. If the event is postponed for any reason, the regulations will be effective between the hours of 6 a.m. and 9 a.m. on June 11, 1995.

FOR FURTHER INFORMATION CONTACT: Lieutenant (Junior Grade) Benjamin M. Algeo, Chief Boating Affairs Branch, First Coast Guard District, (617) 223–8310.

SUPPLEMENTARY INFORMATION:

Drafting Information

The drafters of this notice are Lieutenant (Junior Grade) B.M. Algeo, project officer, Chief, Boating Affairs Branch, First Coast Guard District and Lieutenant Commander S.R. Watkins, project counsel, First Coast Guard District Legal Office.

Regulatory History

A notice of proposed rulemaking (NPRM) was published on April 24, 1995 proposing a permanent change to the effective period in the current regulation found in 33 CFR 100.101. The proposed change would provide for a flexible time period during which the event would be held because event times are dependent upon certain tidal conditions which vary from year to year. The comment period established in the April 24, 1995 NPRM extends beyond the date of this year's race, therefore a temporary final rule is necessary to change the event times for this year's race. No NPRM was published specifically for this temporary final rule and good cause exists for making it effective in less than 30 days after **Federal Register** publication. The Harvard-Yale Regatta is a long-standing and popular local event. The public is well aware of the general procedures followed to hold this annual event. This regulation simply changes the time of the event to allow the race committee to hold the event during optimal tidal conditions. Little commercial traffic is known to transit the area. Sufficient notice will be provided for any affected party to alter plans with minimal impact. Publishing an NPRM and delaying its effective date would be contrary to the public interest since immediate action is needed to respond to any potential hazards to the maritime public.

Background and Purpose

This temporary final rule changes the published time of the Harvard-Yale Regatta found in the permanent regulation at 100 CFR 100.101. The event sponsor has determined that optimal tidal conditions for this year's event exist between 3:30 p.m. and 8 p.m. on Saturday, June 10, 1995 (and between 6 a.m. and 9 a.m. on the alternate date, Sunday, June 11, 1995). These race times also will be published prior to the event in the Coast Guard Local Notice to Mariners. In order to provide for the safety of spectators and participants, the Coast Guard will restrict vessel movement in the race course area and will allow vessels to transit the regulated area under Coast Guard escort.

Regulatory Evaluation

This rule is not a significant regulatory action under section 3(f) of Executive Order 12866, and does not require an assessment of potential costs and benefits under section 6(a)(3) of that order. It has been exempted from review by the Office of Management and Budget under that order. It is not significant under the regulatory policies and procedures of the Department of Transportation (DOT) (44 FR 11040,

February 26, 1979). The Coast Guard expects the economic impact of this rule to be so minimal that a full Regulatory Evaluation, under paragraph 10e of the regulatory policies and procedures of DOT, is unnecessary. This conclusion is based on the fact that this rule makes only a slight change to the effective period found in the permanent rule at 33 CFR 100.101. The public is fully aware of the terms and conditions of this annual event. Commercial traffic on the affected portion of the Thames River is infrequent. The race is popular and of short duration. Local commercial entities and the U.S. Navy have been notified of the race schedule. Vessel traffic may be allowed to transit the regulated area at the discretion of the patrol commander.

Small Entities

Under the Regulatory Flexibility Act (5 U.S.C. 601 *et seq.*), the Coast Guard must consider whether this rule will have a significant economic impact on a substantial number of small entities. Small entities include independently owned and operated small businesses that are not dominant in their field, and that otherwise qualify as ''small business concerns'' under section 3 of the Small Business Act (15 U.S.C. 632). For the reasons set forth in the above Regulatory Evaluation, the Coast Guard expects the impact of this regulation to be minimal, and certifies under 5 U.S.C. 605(b) that this temporary final rule will not have a significant economic impact on a substantial number of small entities.

Collection of Information

This regulation contains no collection of information requirements under the Paperwork Reduction Act (44 U.S.C. 3501 *et seq.*).

Federalism

The Coast Guard has analyzed this action in accordance with the principles and criteria contained in Executive Order 12612, and has determined that this regulation does not raise sufficient federalism implications to warrant the preparation of a Federal Assessment.

Environment

The Coast Guard has considered the environmental impact of this regulation and in accordance with paragraph 2.B.2.e(35)(3) of Commandant Instruction M16475.1B, the event is deemed to be categorically excluded from further environmental documentation.

List of Subjects in 33 CFR Part 100

Marine safety, Navigation (water), Records and recordkeeping requirements, Waterways.

For the reasons set forth in the preamble, the Coast Guard temporarily amends part 100 of title 33, Code of Federal Regulations, as follows:

PART 100—SAFETY OF LIFE ON NAVIGABLE WATERS

1. The authority citation for Part 100 continues to read as follows:

Authority: 33 U.S.C. 1233; 49 CFR 1.46 and 33 CFR 100.35.

2. In § 100.101, paragraph (b) is suspended and a new paragraph (d) is temporarily added to read as follows:

§ 100.101 Harvard-Yale Regatta, Thames River, New London, CT.

* * * * *

(d) Effective period. This section is effective between the hours of 3:30 p.m. and 8 p.m. on June 10, 1995. If the races scheduled for June 10, 1995 are postponed, this section will be effective between the hours of 6 a.m. and 9 a.m. on June 11, 1995.

Dated: May 15, 1995.

J.L. Linnon,

Rear Admiral, U. S. Coast Guard, Commander, First Coast Guard District.

[FR Doc. 95–13024 Filed 5–25–95; 8:45 am]

BILLING CODE 4910–14–M

---

33 CFR Part 100

[CGD 09–95–010]

Special Local Regulation; Geneva Offshore Grand Prix, Lake Erie, Geneva-on-the-Lake, OH

AGENCY: Coast Guard, DOT.

ACTION: Temporary final rule.

SUMMARY: A special local regulation is being adopted for the Geneva Offshore Grand Prix. This event will be held on Lake Erie, Geneva-on-the-Lake, OH, on May 28, 1995. The Geneva Offshore Grand Prix will have an estimated 35 offshore race boats racing a closed course race on Lake Erie which could pose hazards to navigation in the area. This regulation will restrict general navigation on Lake Erie between Cowles Creek and the Redbrook Boat Club and is needed to provide for the safety of life, limb, and property on navigable waters during the event.

EFFECTIVE DATE: This regulation is effective from 11 a.m. (EDST) until 3 p.m. (EDST) on May 28, 1995.

FOR FURTHER INFORMATION CONTACT: Marine Science Technician Second Class Jeffrey M. Yunker, Ninth Coast Guard District, Aids to Navigation and Waterways Management Branch, Room 2083, 1240 East Ninth Street, Cleveland, Ohio, 44199–2060, (216) 522–3990.

SUPPLEMENTARY INFORMATION: In accordance with 5 U.S.C. 553, a Notice of Proposed Rulemaking has not been published for this regulation and good cause exists for making it effective in less than 30 days from the date of publication. Following normal rulemaking procedures would have been impracticable. The application to hold this event was not received by the Commander, Ninth Coast Guard District, until May 4, 1995, and there was not sufficient time remaining to publish a proposed rule in advance of the event or to provide for a delayed effective date.

Drafting Information

The drafters of this notice are Lieutenant Junior Grade Byron D. Willeford, Project Officer, Ninth Coast Guard District, Aids to Navigation and Waterways Management Branch, and Lieutenant Karen E. Lloyd, Project Attorney, Ninth Coast Guard District Legal Office.

Discussion of Regulation

The Geneva Offshore Grand Prix will be held on Lake Erie between Cowles Creek and the Redbrook Boat Club on May 28, 1995. This event will have an estimated 35 offshore race boats racing a closed course race on Lake Erie which could pose hazards to navigation in the area. The effect of this rule will be to restrict general navigation on that portion of Lake Erie, in an area rectangular in shape, from the mouth of Cowles Creek, west along the shoreline approximately 4.4 statute miles, extending offshore approximately 0.7 statute miles, for the safety of spectators and participants. This regulation is necessary to ensure the protection of life, limb, and property on navigable waters during this event. Any vessel desiring to transit the regulated area may do so only with prior approval of the Patrol Commander (Officer in Charge, U.S. Coast Guard Station Ashtabula, OH).

This rule is issued pursuant to 33 U.S.C. 1233 as set out in the authority citation for all of Part 100.

Federalism Implications

This action has been analyzed in accordance with the principles and criteria contained in Executive Order 12612, and it has been determined that the rulemaking does not have sufficient

federalism implications to warrant the preparation of a Federalism Assessment.

Environment

The Coast Guard is conducting an environmental analysis for this event in accordance with section 2.B.2.c of Coast Guard Commandant Instruction M16475.1B, and the Coast Guard Notice of final agency procedures and policy for categorical exclusions found at (59 FR 38654; July 29, 1994).

Economic Assessment and Certification

This rule is not a significant regulatory action under section 3(f) of Executive Order 12866 and does not require an assessment of potential costs and benefits under section 6(a)(3) of that order. It has been exempted from review by the Office of Management and Budget under that order. It is not significant under the regulatory policies and procedures of the Department of Transportation (DOT) (44 FR 11040; February 26, 1979). The Coast Guard expects the economic impact of this regulation to be so minimal that a full Regulatory Evaluation under paragraph 10e of the regulatory policies and procedures of the DOT is unnecessary.

Collection of Information

This rule will impose no collection of information requirements under the Paperwork Reduction Act, 44 U.S.C. 3501 et seq.

List of Subjects in 33 CFR Part 100

Marine safety, Navigation (water), Reporting and recordkeeping requirements, Waterways.

Temporary Regulation

In consideration of the foregoing, Part 100 of Title 33, Code of Federal Regulations, is amended as follows:

PART 100—[AMENDED]

1. The authority citation for Part 100 continues to read as follows:

Authority: 33 U.S.C. 1233; 49 CFR 1.46 and 33 CFR 100.35.

2. A temporary section 100.35–T09–010 is added to read as follows:

§ 100.35—T09–010 Geneva Offshore Grand Prix, Lake Erie, Geneva-on-the-Lake, OH.

(a) *Regulated Area:* That portion of Lake Erie from:

Latitude	*Longitude*
41°51.5′N	080°58.2′W, thence to
41°52.4′N	080°53.4′W, thence to
41°53′N	080°53.4′W, thence to
41°52.2′N	080°58.2′W, thence to
41°51.5′N	080°58.2′W.

Datum: NAD 83

(b) *Special local regulation:* This section restricts general navigation in the regulated area for the safety of spectators and participants. Any vessel desiring to transit the regulated area may do so only with prior approval of the Patrol Commander.

(c) *Patrol Commander:* (1) The Coast Guard will patrol the regulated area under the direction of a designated Coast Guard Patrol Commander (Officer in Charge, U.S. Coast Guard Station Ashtabula, OH). The Patrol Commander may be contacted on channel 16 (156.8 MHZ) by the call sign ''Coast Guard Patrol Commander.''

(2) The Patrol Commander may direct the anchoring, mooring, or movement of any boat or vessel within the regulated area. A succession of sharp, short signals by whistle or horn from vessels patrolling the area under the direction of the U.S. Coast Guard Patrol Commander shall serve as a signal to stop. Any vessel so signaled shall stop and shall comply with the orders of the Patrol Commander. Failure to do so may result in expulsion from the area, citation for failure to comply, or both.

(3) The Patrol Commander may establish vessel size and speed limitations and operating conditions.

(4) The Patrol Commander may restrict vessel operation within the regulated area to vessels having particular operating characteristics.

(5) The Patrol Commander may terminate the marine event or the operation of any vessel at any time it is deemed necessary for the protection of life, limb, or property.

(6) All persons in the area shall comply with the orders of the Coast Guard Patrol Commander.

(d) *Effective Date:* This section is effective from 11 a.m. (estd) until 3 p.m. (edst) on May 28, 1995, unless otherwise terminated by the Coast Guard Patrol Commander (Officer in Charge, U.S. Coast Guard Station Ashtabula, OH).

Dated: May 16, 1995.

Rudy K. Peschel,

Rear Admiral, U.S. Coast Guard, Commander, Ninth Coast Guard District.

[FR Doc. 95–13028 Filed 5–25–95; 8:45 am]

BILLING CODE 4910–14–M

---

33 CFR Part 165

[COTP Louisville 95–002]

RIN 2115–AA97

Safety Zone; Ohio River, Cincinnati, OH

AGENCY: Coast Guard, DOT.

ACTION: Temporary rule.

SUMMARY: The Coast Guard is establishing a temporary safety zone on the Ohio River. The regulation is needed to control commercial vessel traffic in the regulated area while transiting downbound at night during high water conditions. The regulation will restrict commercial navigation in the regulated area for the safety of vessel traffic and the protection of life and property along the river.

EFFECTIVE DATES: This regulation is effective on May 18, 1995, at 4 p.m. edst. It will terminate at 6 p.m. edst, on May 30, 1995, unless sooner terminated by the Captain of the Port, Louisville, Kentucky.

FOR FURTHER INFORMATION CONTACT: LT Paul D. Thorne, Supervisor, Coast Guard Marine Safety Detachment, Cincinnati, Ohio at (513) 922–3820.

SUPPLEMENTARY INFORMATION:

Background and Purpose

The situation requiring this rule is high water in the Ohio River in the vicinity of Cincinnati, Ohio. The Ohio River in the Cincinnati area is hazardous to transit under the best conditions. To transit the area, mariners must navigate through several sweeping turns and seven bridges. When the water level in the Ohio River reaches 45 feet, on the Cincinnati gauge, river currents increase and become very unpredictable, making it difficult for downbound vessels to maintain steerageway. During hours of darkness the background lights of the city of Cincinnati hamper mariners' ability to maintain sight of the front of their tow. The rule is intended to protect the public and the environment, at night during periods of high water, from a potential hazard of large downbound tows carrying hazardous material through the regulated area.

In accordance with 5 U.S.C. 553, a notice of proposed rulemaking has not been published for this regulation and good cause exists for making it effective in less than 30 days from the date of publication. Following normal rulemaking procedures would have been impracticable. Specifically, the high water periods in the Cincinnati, Ohio area are natural events which cannot be predicted with any reasonable accuracy. The Coast Guard deems it to be in the public's best interest to issue a rule now, as the situation presents an immediate hazard to navigation, life, and property.

Regulatory Evaluation

This rule is not a significant regulatory action under section 3(f) of

Executive Order 12866 and does not require an assessment of potential costs and benefits under section 6(a)(3) of that order. It has been exempted from review by the Office of Management and Budget under that order. It is not under the regulatory policies and procedures of the Department of Transportation (DOT) (44 FR 11040; February 26, 1979). Because the duration of this emergency situation is anticipated to be short, the Coast Guard expects the economic impact of this rule to be so minimal that a full Regulatory Evaluation under paragraph 10e of the regulatory policies and procedures of DOT is unnecessary.

To avoid any unnecessary adverse economic impact on businesses which use the river for commercial purposes, Captain of the Port, Louisville, Kentucky will monitor river conditions and will authorize entry of restricted vessels into the regulated area as conditions permit. Changes will be announced by Marine Safety Information Radio broadcast (Broadcast Notice to Mariners) on VHF marine band radio, channel 22 (157.1 MHZ). Mariners may also call LT Paul D. Thorne, Supervisor, Coast Guard Marine Safety Detachment, Cincinnati, Ohio at (513) 922–3820 for current information.

Collection of Information

This rule contains no collection of information requirements under the Paperwork Reduction Act (44 U.S.C. 3501 *et seq.*)

Federalism Assessment

The Coast Guard has analyzed this rule under the principles and criteria contained in Executive Order 12612 and has determined that it does not raise sufficient federalism implications to warrant the preparation of a Federalism Assessment.

Environment

The Coast Guard considered the environmental impact of this rule and concluded that, under section 2.B.2. of Commandant Instruction M16475.1B, this rule is categorically excluded from further environmental documentation.

Lists of Subjects in 33 CFR Part 165

Harbors, Marine safety, Navigation (water), Reporting and recordkeeping requirements, Security measures, Waterways.

For the reasons set out in the preamble, the Coast Guard amends 33 CFR Part 165 as follows:

PART 165—[AMENDED]

1. The authority citation for Part 165 continues to read as follows:

Authority: 33 U.S.C. 1231; 50 U.S.C. 191; 33 CFR 1.05–1(g), 6.04–1, 6.04–6, and 160.5; 49 CFR 1.46.

2. A new temporary § 165.T02–008 is added, to read as follows:

§ 165.T02–008 Safety Zone: Ohio River, Cincinnati, OH.

(a) *Location.* The following area is a safety zone: The Ohio River between miles 468.5 and 473.0.

(b) *Effective Dates.* This section becomes effective on May 18, 1995, at 4 p.m. EDST. It will terminate at 6 p.m. EDST on May 30, 1995, unless sooner terminated by the Captain of the Port, Louisville, Kentucky.

(c) *Regulations.* In accordance with the general regulations of § 165.23 of this part, entry into this zone by all downbound vessels towing cargoes regulated by Title 46, Code of Federal Regulations, Subchapters D and O, with a tow length exceeding 600 feet, excluding the tow boat, is prohibited from one-half hour before sunset to one-half hour after sunrise. The Captain of the Port will notify the maritime community of river conditions affecting the area covered by this safety zone by Marine Safety Information Radio Broadcast on VHF Marine Band Radio, Channel 22 (157.1 MHZ).

Dated: May 18, 1995.

W.J. Morani, Jr.,

Captain, U.S. Coast Guard, Captain of the Port, Louisville, Kentucky.

[FR Doc. 95–13027 Filed 5–25–95; 8:45 am]

BILLING CODE 4910–14–M

---

33 CFR Part 165

[COTP Paducah 95–001]

RIN 2115–AA97

Safety zone; Tennessee River, Mile 161.5 to 162.5

AGENCY: Coast Guard, DOT.

ACTION: Temporary final rule.

SUMMARY: The Coast Guard is establishing a temporary safety zone on the Tennessee River from mile 161.5 to 162.5. The zone is needed to protect life and property during the salvage of a highway bridge that collapsed into the river. The regulation restricts navigation into the zone.

EFFECTIVE DATE: This regulation becomes effective at 9:30 a.m. on May 19, 1995 and terminates at 8 p.m. on June 30, 1995.

FOR FURTHER INFORMATION CONTACT:

LTJG Patrick S. Reilly, Operations Officer, Captain of the Port, Paducah, Kentucky at (502) 442–1621.

SUPPLEMENTARY INFORMATION:

Background and Purpose

The situation requiring this rule is the reduction of the navigation channel at mile 161.9 on the Tennessee River due to the collapsing of a highway over the river. Construction equipment will be onscene to remove the obstruction to navigation and the remainder of the bridge in the water has reduced a navigable channel to approximately 150 feet. The rule is intended to limit commercial tows to no more than three barges long by one barge wide and to require tows to use the assist tug provided by the bridge construction company. Commercial tows can transit the safety zone only during daylight hours. Light commercial boats and recreational vessels will be allowed to transit the zone twenty four hours, but must contact the Coast Guard representative onscene for transiting instructions. All vessels must contract Coast Guard representative onsence via VHF–FM channel 13 or 16 for passing instructions.

In accordance with 5 U.S.C. 553, a notice of proposed rulemaking was not published for this rule and good cause exists for making it effective in less than 30 days after **Federal Register** publication. Following normal rulemaking procedures would have been impracticable. Publication of a notice of proposed rulemaking and delay of effective date would be contrary to the public interest because immediate action is necessary to prevent injury to human life or damage to property of vessels that would be transiting the area.

Regulatory Evaluation

This rule is not a significant regulatory action under section 3(f) of Executive Order 12866 and does not require an assessment of potential costs and benefits under section 6(a)(3) of that order. It has been exempted from review by the Office of Management and Budget under that order. It is not under the regulatory policies and procedures of the Department of Transportation (DOT) (44 FR 11040; February 26, 1979). The Coast Guard expects the economic impact of this proposal to be so minimal that a full Regulatory Evaluation under paragraph 10e of the regulatory policies and procedures of DOT is unnecessary because of the short duration of the closure.

Collection of Information

This rule contains no information collection requirements under the Paperwork Reduction Act (44 U.S.C. 3501 *et seq.*).

Federalism

The Coast Guard has analyzed this rule under the principles and criteria contained in Executive Order 12612 and has determined that this rule does not have sufficient federalism implications to warrant the preparation of a Federalism Assessment.

Environment

The Coast Guard considered the environmental impact of this rule and concluded that, under paragraph 2.B.2.g[5] of Commandant Instruction M16475.1B, (as revised by 59 FR 38654; July 29, 1994) this rule is categorically excluded from further environmental documentation as an action to protect public safety. A Categorical Exclusion Determination has been prepared and placed in the rulemaking.

List of Subjects in 33 CFR Part 165

Harbors, Marine safety, Navigation (water) Reporting and recordkeeping, requirements Security measures, Waterways.

For the reasons set out in the preamble, the Coast Guard amends 33 CFR Part 165 as follows:

PART 165—[AMENDED]

1. The authority citation for Part 165 continues to read as follows:

Authority: 33 U.S.C. 1231; 50 U.S.C. 191; 33 CFR 1.05–1(g), 6.04–1, 6.04–6, and 160.5; 49 CFR 1.46.

2. A temporary § 165.T02–017 is added to read as follows:

§ 165.T02–017 Safety Zone; Tennessee River mile 161.5 to 162.5.

(a) *Location.* The following area is a Safety Zone: Tennessee River mile 161.5 to 162.5.

(b) *Effective Dates.* This section becomes effective at 9:30 a.m. on May 19, 1995 and terminates at 8 p.m. on June 30, 1995.

(c) *Regulations.* In accordance with the general regulations in § 165.23 of this part, entry into this zone is prohibited except as authorized by the Captain of the Port.

Dated: May 19, 1995.

Robert M. Segovis,

Commander, USCG, Captain of the Port.

[FR Doc. 95–13026 Filed 5–25–95; 8:45 am]

BILLING CODE 4910–14–M

ENVIRONMENTAL PROTECTION AGENCY

40 CFR Part 52

[DC15–1–6358; FRL–5178–7]

Approval and Promulgation of Air Quality Implementation Plans; District of Columbia—Emission Statement Program

AGENCY: U.S. Environmental Protection Agency (EPA).

ACTION: Direct final rule.

SUMMARY: EPA is approving a State Implementation Plan (SIP) revision submitted by the District of Columbia. This revision consists of an emission statement program for stationary sources which emit volatile organic compounds (VOCs) and/or nitrogen oxides (NO_X) at or above specified actual emission threshold levels. The intended effect of this action is to approve a regulation for annual reporting of actual emissions by sources that emit VOC and/or NO_X within the District in accordance with section 182(a)(3)(b) of the 1990 Clean Air Act Amendments (CAAA). This action is being taken under section 110 of the Clean Air Act.

EFFECTIVE DATE: This action will become effective July 25, 1995 unless notice is received on or before June 26, 1995 that adverse or critical comments will be submitted. If the effective date is delayed, timely notice will be published in the **Federal Register**.

ADDRESSES: Comments may be mailed to Thomas J. Maslany, Director, Air, Radiation, and Toxics Division, U.S. Environmental Protection Agency, Region III, 841 Chestnut Building, Philadelphia, Pennsylvania, 19107. Copies of the documents relevant to this action are available for public inspection during normal business hours at the Air, Radiation, and Toxics Division, U.S. Environmental Protection Agency, Region III, 841 Chestnut Building, Philadelphia, PA 19107; the Air and Radiation Docket and Information Center, U.S. Environmental Protection Agency, 401 M Street. SW, Washington, DC 20460; and the Environmental Regulation Administration, District of Columbia Department of Consumer and Regulatory Affairs, 2100 Martin Luther King Ave, S.E., Washington, DC 20020.

FOR FURTHER INFORMATION CONTACT: Enid A. Gerena, U.S. Environmental Protection Agency, Air, Radiation, and Toxics Division, 841 Chestnut Building, Philadelphia, PA 19107, (215) 597–8239.

SUPPLEMENTARY INFORMATION: On October 22, 1993, the District of Columbia Department of Consumer and Regulatory Affairs (DCRA) submitted a formal revision to its SIP. One of those revisions is the District's Emission Statement program which requires owners of stationary sources that emit VOCs and/or NO_X, above specified actual emission applicability thresholds, to submit annual statements certifying emissions. This notice only addresses the District's Emission Statement SIP submittal. The other revisions submitted on October 22, 1993 are the subjects of separate rulemaking notices.

I. Background

The air quality planning and State Implementation Plan (SIP) requirements for ozone nonattainment and transport areas are set out in subparts I and II of Part D of Title I of the Clean Air Act, as amended by the Clean Air Act Amendments of 1990. EPA published a ''General Preamble'' describing EPA's preliminary views on how it intends to review SIP's and SIP revisions submitted under Title I of the CAA, including those State submittals for ozone transport areas within the States {see 57 FR 13498 (April 16, 1992) [''SIP: General Preamble for the Implementation of Title I of the Clean Air Act Amendments of 1990''], 57 FR 18070 (April 28, 1992) [''Appendices to the General Preamble''], and 57 FR 55620 (November 25, 1992) [''SIP: NO_X Supplement to the General Preamble'']}.

EPA also issued a draft guidance document describing the requirements for the emission statement programs discussed in this action, entitled ''Guidance on the Implementation of an Emission Statement Program'' (July, 1992). The Agency is also conducting a rulemaking process to modify title 40, part 51 of the CFR to reflect the requirements of the emission statement program.

Section 182 of the Act sets out a graduated control program for ozone nonattainment areas. Section 182(a) sets out requirements applicable in marginal ozone nonattainment areas, which are also made applicable by section 182 (b), (c), (d), and (e) to all other ozone nonattainment areas. Among the requirements in section 182(a) is a program for stationary sources to prepare and submit to the State each year emission statements certifying their actual emissions of VOCs and NO_X. This section of the Act provides that the States or in this case the District, are to submit a revision to their SIPs by November 15, 1992 establishing this emission statement program.

If a source emits either VOCs or NO_X at or above the designated minimum reporting level, the other pollutant should be included in the emission statement, even if it is emitted at levels below the specified cutoffs.

States or the District may waive, with EPA approval, the requirement for an emission statement for classes or categories of sources with less than 25 tons per year of actual plant-wide NO_X or VOC emissions in nonattainment areas if the class or category is included in the base year and periodic inventories and emissions are calculated using emissions factors established by EPA (such as those found in EPA publication AP–42) or other methods acceptable to EPA. Emissions from stationary sources that emit less than 25 tons per year of VOC and NO_X are included in the District of Columbia's 1990 base year emission inventory and must also be included in the periodic emission inventories.

At minimum, the emission statement data should include:

—Certification of data accuracy;
—Source identification information;
—Operating schedule;
—Emissions information (to include annual and typical ozone season day emissions);
—Control equipment information; and
—Process data.

EPA developed emission statements data elements to be consistent with other source and State reporting requirements. This consistency is essential to assist States (or the District) with quality assurance for emission estimates and to facilitate consolidation of all EPA reporting requirements.

II. EPA's Evaluation of the District's Submittal

A. Procedural Background

The District of Columbia held a public hearing on October 27, 1992, for the purpose of soliciting public comment on proposed regulatory revisions concerning emission statements for stationary sources. The regulatory revisions were adopted on July 16, 1993, submitted to EPA on October 22, 1993 as a revision to the SIP, and became effective in the District on September 30, 1993.

B. Components of the District's Emission Statement Program

There are several key and specific components of an acceptable emission statement program. Specifically, the District must submit a revision to its SIP which consists of an emission statement program which meets the minimum requirements for reporting by the sources and the State (or the District). For the emission statement program to be approvable, the District's SIP revision must include, at a minimum, definitions and provisions for applicability, compliance, and specific source reporting requirements and reporting forms.

The District's revision consists of amendments to D.C. ACT 10–56 District of Columbia Air Pollution Control Act of 1984. These amendments revise Section 20 DCMR 199, Definitions and add Section 20 DCMR 500.7, Emission Statements.

Section 20 DCMR 199, Definitions, has been revised by adding the definitions of the following terms:

Annual process rate; Certifying individual; Control efficiency; Control equipment identification code; Emission factor; Emission statement; Estimated emission method code; Oxides of nitrogen; Percent annual throughput; Plant; Point; Process rate; Standard industrial classification code; Typical ozone season day; and Volatile organic compounds.

Section 20 DCMR 500.7, Emission Statements, requires that a person who owns or operates any installation, source, or premises located in areas designated by the CAA as marginal, moderate, serious, severe or extreme ozone nonattainment area to report the levels of emissions from the sources emitting 25 tons per year (TPY) or more of VOCs and NO_X, in order to track emission reductions necessary to attain the ozone National Ambient Air Quality Standards (NAAQS). Section 20 DCMR 500.7, Emission Statements, also requires that a certifying official for each facility provide the District with a statement reporting emissions by April 15 of each year, beginning with April 15, 1993, for the emissions discharged during the previous calendar year. Section 20 DCMR 500.7, Emission Statements, also defines specific requirements for the content of these annual emission statements.

C. Enforceability

The District of Columbia has provisions in its SIP which ensure that the emission statement requirements of Section 182(a)(3)(B) and Sections 184(b)(2) and 182(f) of the CAA as required by D.C. ACT 10–56, sections 20 DCMR 199, and section 20 DCMR 500.7 are adequately enforced. Once EPA completes the rulemaking process approving the District's Emission Statement program as part of the SIP, it will be federally enforceable.

EPA has determined that the submittal made by the District of Columbia satisfies the relevant requirements of the CAA and EPA's guidance document, ''Guidance on the Implementation of an Emission Statement Program'' (July 1992). EPA's detailed review of the District's Emission Statement Program is contained in a Technical Support Document (TSD) which is available, upon request, from the EPA Regional Office listed in the **ADDRESSES** section of this action.

EPA is approving this SIP revision without prior proposal because the Agency views this as a noncontroversial amendment and anticipates no adverse comments. However, in a separate document in this **Federal Register** publication, EPA is proposing to approve the SIP revision should adverse or critical comments be filed. This action will be effective July 25, 1995 unless, within 30 days of publication, adverse or critical comments are received.

If EPA receives such comments, this action will be withdrawn before the effective date by publishing a subsequent notice that will withdraw the final action. All public comments received will then be addressed in a subsequent final rule based on this action serving as a proposed rule. EPA will not institute a second comment period on this action. Any parties interested in commenting on this action should do so at this time. If no such comments are received, the public is advised that this action will be effective on July 25, 1995.

III. Final Action

EPA is approving revisions to the District of Columbia SIP to include an Emission Statement Program. These revisions consist of amendments to D.C. ACT 10–56 District of Columbia Air Pollution Control Act by revising section 20 DCMR 199, Definitions, and the addition of section 20 DCMR 500.7, Emission Statements.

Nothing in this action should be construed as permitting or allowing or establishing a precedent for any future request for revision of any SIP. Each request for revision to the SIP shall be considered separately in light of specific technical, economic, and environmental factors and in relation to relevant statutory and regulatory requirements.

Under the Regulatory Flexibility Act, 5 U.S.C. 600 *et. seq.*, EPA must prepare a regulatory flexibility analysis assessing the impact of any proposed or final rule on small entities. 5 U.S.C. 603 and 604. Alternatively, EPA may certify that the rule will not have a significant economic impact on a substantial number of small entities. Small entities include small businesses, small not-for-

profit enterprises, and government entities with jurisdiction over populations of less than 50,000.

SIP approvals under section 110 and subchapter I, Part D of the Act do not create any new requirements, but simply approve requirements that the State is already imposing. Therefore, because the Federal SIP-approval does not impose any new requirements, the Administrator certifies that it does not have a significant impact on small entities. Moreover, due to the nature of the federal-state relationship under the CAA, preparation of a regulatory flexibility analysis would constitute federal inquiry into the economic reasonableness of state or District action. The CAA forbids EPA to base its actions concerning SIPs on such grounds. *Union Electric Co.* v. *U.S. E.P.A.* , 427 U.S. 246, 256–66 (S.Ct. 1976); 42 U.S.C. section 7410 (a)(2).

This action has been classified as a Table 2 action for signature by the Regional Administrator under the procedures published in the **Federal Register** on January 19, 1989 (54 FR 2214–2225) as revised by an October 4, 1993 memorandum from Michael H. Shapiro, Acting Assistant Administrator for Air and Radiation. The OMB has exempted this regulatory action from E.O. 12866 review. Under section 307(b)(1) of the Clean Air Act, petitions for judicial review of this action must be filed in the United States Court of Appeals for the appropriate circuit by July 25, 1995. Filing a petition for reconsideration by the Administrator of this final rule does not affect the finality of this rule for the purposes of judicial review nor does it extend the time within which a petition for judicial review may be filed, and shall not postpone the effectiveness of such rule or action.

This action approving the District of Columbia Emission Statement SIP submittal may not be challenged later in proceedings to enforce its requirements. (See section 307(b)(2).)

List of Subjects in 40 CFR Part 52

Environmental protection, Air pollution control, Hydrocarbons, Incorporation by reference, Intergovernmental relations, Oxides of nitrogen, Ozone, Reporting and recordkeeping requirements, volatile organic compounds.

Dated: January 25, 1995.

Peter H. Kostmayer,

Regional Administrator, Region III.

40 CFR part 52, subpart J of chapter I, title 40 is amended as follows:

PART 52—[AMENDED]

1. The authority citation for Part 52 continues to read as follows:

Authority: 42 U.S.C. 7401–7671q.

Subpart J—District of Columbia

2. Section 52.470 is amended by adding paragraph (c)(32) to read as follows:

§ 52.470 Identification of plan.

* * * * *

(c) * * *

(32) Revisions to the District of Columbia Regulations State Implementation Plan submitted on October 22, 1993 by the Government of the District of Columbia Department of Consumer and Regulatory Affairs.

(i) Incorporation by reference.

(A) Letter of October 22, 1993 from the Government of the District of Columbia Department of Consumer and Regulatory Affairs transmitting a revised regulation which require owners of stationary sources to submit emission statements annually.

(B) D.C. ACT 10–56 amendments to District of Columbia Air Pollution Control Act of 1984, Section 20 DCMR 199, specifically the addition of new definitions, and the addition of Section 20 DCMR 500.7. Effective on September 30, 1993.

[FR Doc. 95–12927 Filed 5–25–95; 8:45 am]

BILLING CODE 6560–50–P

---

40 CFR Part 52

[ID12–1–6992a; FRL -5206–6]

Approval and Promulgation of Implementation Plans: State of Idaho

AGENCY: Environmental Protection Agency.

ACTION: Direct final rule.

SUMMARY: On August 25, 1994, the Environmental Protection Agency (EPA) issued a direct final rule approving the State Implementation Plan for the Pinehurst, Idaho, PM–10 (particulate matter with an aerodynamic diameter of less than or equal to a nominal ten micrometers) nonattainment area (59 FR 43745 (August 25, 1994)). In this rulemaking action, EPA is approving the provisions of that plan for the area just outside the City of Pinehurst which was designated nonattainment in January 1994.

EFFECTIVE DATE: This direct final rule will be effective on July 25, 1995 unless adverse or critical comments are received by June 26, 1995. If the effective date is delayed, timely notice will be published in the **Federal Register**.

ADDRESSES: Written comments should be addressed to: Montel Livingston, SIP Manager, EPA, Air & Radiation Branch (AT–082), 1200 Sixth Avenue, Seattle, Washington 98101.

Copies of material submitted to EPA may be examined during normal business hours at the following locations: EPA, Region 10, Air & Radiation Branch, 1200 Sixth Avenue (AT–082), Seattle, Washington 98101, and the State of Idaho Division of Environmental Quality, 1410 N. Hilton, Boise, ID 83720.

FOR FURTHER INFORMATION CONTACT: Doug Cole, EPA, Idaho Operations Office, 1435 N. Orchard St., Boise, ID 83706, (208) 334–9555.

SUPPLEMENTARY INFORMATION:

I. Background

On August 25, 1994, EPA issued a direct final rule approving the State Implementation Plan (SIP) for the Pinehurst PM–10 nonattainment area in Shoshone County, Idaho. *See* 59 FR 43745. The rule became effective October 24, 1994. In that document, EPA described its approval action as covering the Pinehurst, Idaho nonattainment area that was designated nonattainment for PM–10 and classified as moderate under sections 107(d)(4)(B) and 188(a) of the Clean Air Act upon enactment of the 1990 Clean Air Act Amendments (citing 56 FR 56694 (November 6, 1991)).[1] The document inadvertently failed to explain, however, that, effective January 20, 1994, EPA approved the redesignation of an additional area in Shoshone County, adjacent to the Pinehurst nonattainment area, as nonattainment for PM–10. *See* 58 FR 67334, 67339 (December 21, 1993) and 40 CFR 81.313 (codified air quality designations for the State of Idaho). Further, the August 25, 1994 document did not explain that the SIP revision submitted by Idaho to address certain moderate PM–10 nonattainment planning requirements for Pinehurst also applied to the adjacent moderate PM–10 nonattainment area.

II. This Action

In this action, EPA is approving the PM–10 SIP submitted by the State of Idaho on April 14, 1992 and described in the August 25, 1994 **Federal Register**

[1] The 1990 Amendments to the Clean Air Act made significant changes to the Act. *See* Public Law No. 101–549, 104 Stat. 2399. References herein are to the Clean Air Act, as amended (''Act'' or ''CAA''). The Clean Air Act is codified, as amended, in the U.S. Code at 42 U.S.C. 7401, et seq.

document (59 FR 43745), as meeting certain Clean Air Act moderate PM–10 nonattainment area planning requirements for the portion of the Shoshone County, Idaho nonattainment area outside the City of Pinehurst.

In the **Federal Register** document approving the redesignation of the area just outside the City of Pinehurst (hereinafter, the ''Pinehurst expansion area''), EPA noted that if the moderate area PM–10 SIP developed by the State for the City of Pinehurst also addressed the Pinehurst expansion area and was ultimately approved by EPA, it would satisfy the applicable planning requirements and therefore be unnecessary for the State to submit a separate moderate area plan addressing the Pinehurst expansion area. *See* 58 FR 67339. The control strategies, attainment demonstration and other plan elements of the SIP submitted by the State for the City of Pinehurst did in fact cover the nonattainment boundary as revised effective January 20, 1994, although EPA inadvertently failed to discuss this in its August 25, 1994 approval action. There are no differences in the manner in which the control strategies and other plan elements apply within the City of Pinehurst, on the one hand, and within the Pinehurst expansion area, on the other hand. The plan cites the resolution of the Pinehurst City Council supporting the voluntary wood burning curtailment program as a factor in the program's effectiveness. However, there is no reason to expect that the program would have less effect in the Pinehurst expansion area, which is just outside city limits. Additionally, the woodstove replacement and weatherizations programs are being applied to the Pinehurst expansion area. Therefore, the evaluation and conclusions in EPA's August 25, 1994 action approving the SIP for the City of Pinehurst apply equally to the Pinehurst expansion area. Thus, EPA is approving the Idaho SIP revision addressed in the August 25, 1994, **Federal Register** document as also satisfying certain moderate PM–10 nonattainment planning requirements for the additional PM–10 nonattainment area in Shoshone County referred to as the Pinehurst expansion area. *See* 40 CFR 81.313. EPA concludes that the State has satisfied the requirements calling for: reasonably available control measures (including reasonably available control technology); a demonstration that the area will attain the PM–10 national ambient air quality standards (NAAQS) as expeditiously as practicable; an accurate emissions inventory; and the other moderate PM–10 nonattainment planning requirements discussed in the August 25, 1994 **Federal Register** document and underlying documents. EPA is also determining that major stationary sources of PM–10 precursors do not contribute significantly to PM–10 levels in excess of the NAAQS in the Pinehurst expansion area and is therefore granting the exclusion from precursor control requirements set out at section 189(e) of the CAA. *See generally* CAA section 172 (c), 188 & 189; 57 FR 13498 (April 16, 1992) & 57 FR 18070 (April 28, 1992).

However, as indicated in the August 25, 1994 **Federal Register** document, the State has not satisfied the requirement for contingency measures for either the City of Pinehurst or the Pinehurst expansion area. *See* CAA section 172 (c)(9) and 59 FR at 43750–43751. Contingency measures for the City of Pinehurst were due on November 15, 1993 and the State has until July 13, 1995 to correct this deficiency for the City of Pinehurst or it will face federal highway or offset sanctions. *See* 57 FR 13543 & 59 FR 43751. Contingency measures for the Pinehurst expansion area are due July 20, 1995. *See* 58 FR 67341. The State's obligation to submit a permit program for the construction and operation of new and modified stationary sources of PM–10 (NSR program) in the Pinehurst expansion area by July 13, 1995, has been satisfied by the State's May 17, 1994 submittal of an NSR program covering all nonattainment areas in the State. EPA is currently in the process of reviewing the State's NSR program to determine if the program meets the requirements of the CAA. EPA intends to take action on Idaho's NSR program when EPA has completed its review.

For additional discussion of the control measures and other planning requirements contained in the SIP and EPA's analysis, please see the State submittal, EPA's approval of the plan for the City of Pinehurst (59 FR 43745) and the docket supporting that approval.

III. Administrative Review

Under the Regulatory Flexibility Act, 5 U.S.C. 600 et seq., EPA must prepare a regulatory flexibility analysis assessing the impact of any proposed or final rule on small entities. 5 U.S.C. 603 and 604. Alternatively, EPA may certify that the rule will not have a significant impact on a substantial number of small entities. Small entities include small businesses, small not-for-profit enterprises, and government entities with jurisdiction over populations of less than 50,000.

SIP approvals under section 110 and subchapter I, Part D of the CAA do not create any new requirements, but simply approve requirements that the state is already imposing. Therefore, because the federal SIP-approval does not impose any new requirements, I certify that it does not have a significant impact on any small entities affected. Moreover, due to the nature of the federal-state relationship under the Act, preparation of a regulatory flexibility analysis would constitute federal inquiry into the economic reasonableness of state action. The CAA forbids EPA to base its actions concerning SIPs on such grounds. *Union Electric Co.* v. *U.S.E.P.A.*, 427 U.S. 246, 256–66 (S.Ct. 1976); 42 U.S.C. 7410(a)(2).

The EPA is publishing this action without prior proposal because the Agency views this as a noncontroversial amendment and anticipates no adverse comments. However, in a separate document in this **Federal Register** publication, the EPA is proposing to approve the SIP revision should adverse or critical comments be filed. This action will be effective July 25, 1995 unless, within 30 days of its publication, adverse or critical comments are received.

If EPA receives such comments, this action will be withdrawn before the effective date by publishing a subsequent notice that will withdraw the final action. All public comments received will be addressed in a subsequent final rule based on this action serving as a proposed rule. The EPA will not institute a second comment period on this action. Any parties interested in commenting on this action should do so at this time. If no such comments are received, the public is advised that this action will be effective July 25, 1995.

The EPA has reviewed this request for revision of the federally-approved SIP for conformance with the provisions of the 1990 Clean Air Act Amendments enacted on November 15, 1990. The EPA has determined that this action conforms with those requirements.

Nothing in this action should be construed as permitting or allowing or establishing a precedent for any future request for revision to any SIP. Each request for revision to the SIP shall be considered separately in light of specific technical, economic and environmental factors and in relation to relevant statutory and regulatory requirements.

This action has been classified as a Table 2 action by the Regional Administrator under the procedures published in the **Federal Register** on January 19, 1989 (54 FR 2214–2225), as

revised by an October 4, 1993 memorandum from Michael H. Shapiro, Acting Assistant Administrator for Air and Radiation. The OMB has exempted this regulatory action from E.O. 12866 review.

Under section 307(b)(1) of the Clean Air Act, petitions for judicial review of this action must be filed in the United States Court of Appeals for the appropriate circuit by July 25, 1995. Filing a petition for reconsideration by the Administrator of this final rule does not affect the finality of this rule for the purposes of judicial review nor does it extend the time within which a petition for judicial review may be filed and shall not postpone the effectiveness of such rule or action. This action may not be challenged later in proceedings to enforce its requirements. (See section 307(b)(2), 42 U.S.C. 7607(b)(2)).

List of Subjects in 40 CFR Part 52

Environmental protection, Air pollution control, Incorporation by reference, Particulate matter.

Dated: April 28, 1995.

Chuck Clarke,

Regional Administrator.

Part 52, chapter I, title 40 of the Code of Federal Regulations is amended as follows:

PART 52—[AMENDED]

1.The authority citation for part 52 continues to read as follows:

Authority: 42 U.S.C. 7401–7671q.

Subpart N—Idaho

2. Section 52.670 is amended by revising paragraph (c)(28) introductory text to read as follows:

§ 52.670 Identification of plan.

* * * * *

(c) * * *

(28) On April 14, 1992, the State of Idaho submitted a revision to the SIP for Pinehurst, ID, for the purpose of bringing about the attainment of the national ambient air quality standards for particulate matter with an aerodynamic diameter less than or equal to a nominal 10 micrometers. This submittal includes an additional area in Shoshone County adjacent to the City of Pinehurst which EPA designated nonattainment and moderate for PM–10 on January 20, 1994.

* * * * *

[FR Doc. 95–12929 Filed 5–25–95; 8:45 am]

BILLING CODE 6560–50–P

40 CFR Part 52

[SIPTRAX No. PA63–1–7032a; FRL–5211–1]

Approval and Promulgation of Air Quality Implementation Plans; Commonwealth of Pennsylvania: Determination of Attainment of Ozone Standard by the Pittsburgh-Beaver Valley and Reading Ozone Nonattainment Areas and Determination Regarding Applicability of Certain Reasonable Further Progress and Attainment Demonstration Requirements

AGENCY: Environmental Protection Agency (EPA).

ACTION: Direct final rule.

SUMMARY: EPA has determined that the Pittsburgh-Beaver Valley and Reading ozone nonattainment areas have attained the National Ambient Air Quality Standard (NAAQS) for ozone. This determination is based upon three years of ambient air monitoring data for the years 1992–94 that demonstrate that the ozone NAAQS has been attained in these areas. On the basis of this determination, EPA is also determining that certain reasonable further progress and attainment demonstration requirements, along with certain other related requirements, of Part D of Title I of the Clean Air Act (CAA) are not applicable to these areas as long as these areas continue to attain the ozone NAAQS.

EFFECTIVE DATE: This action will become effective July 10, 1995 unless notice is received on or before June 26, 1995 that adverse or critical comments will be submitted. If the effective date is delayed, timely notice will be published in the **Federal Register**.

ADDRESSES: Comments may be mailed to Marcia L. Spink, Associate Director, Air Programs, Mailcode 3AT00, U.S. Environmental Protection Agency, Region III, 841 Chestnut Building, Philadelphia, Pennsylvania 19107. Copies of the documents relevant to this action are available for public inspection during normal business hours at the Air, Radiation, and Toxics Division, U.S. Environmental Protection Agency, Region III, 841 Chestnut Building, Philadelphia, Pennsylvania 19107.

FOR FURTHER INFORMATION CONTACT: Kathleen Henry, (215) 597–0545.

SUPPLEMENTARY INFORMATION:

I. Background

Subpart 2 of Part D of Title I of the Clean Air Act (CAA) contains various air quality planning and state implementation plan (SIP) submission requirements for ozone nonattainment areas. EPA believes it is reasonable to interpret provisions regarding reasonable further progress (RFP) and attainment demonstrations, along with certain other related provisions, so as not to require SIP submissions if an ozone nonattainment area subject to those requirements is monitoring attainment of the ozone standard (i.e., attainment of the NAAQS demonstrated with three consecutive years of complete, quality assured air quality monitoring data). As described below, EPA has previously interpreted the general provisions of subpart 1 of part D of Title I (sections 171 and 172) so as not to require the submission of SIP revisions concerning RFP, attainment demonstrations, or contingency measures. As explained in a memorandum dated May 10, 1995, from John S. Seitz, Director, Office of Air Quality Planning and Standards to the Regional Air Division Directors, entitled ''Reasonable Further Progress, Attainment Demonstration, and Related Requirements for Ozone Nonattainment Areas Meeting the Ozone National Ambient Air Quality Standard'', EPA believes it is appropriate to interpret the more specific RFP, attainment demonstration and related provisions of subpart 2 in the same manner.

First, with respect to RFP, section 171(1) states that, for purposes of part D of Title I, RFP ''means such annual incremental reductions in emissions of the relevant air pollutant as are required by this part or may reasonably be required by the Administrator for the purpose of ensuring attainment of the applicable national ambient air quality standard by the applicable date.'' Thus, whether dealing with the general RFP requirement of section 172(c)(2), or the more specific RFP requirements of subpart 2 for classified ozone nonattainment areas (such as the 15 percent plan requirement of section 182(b)(1)), the stated purpose of RFP is to ensure attainment by the applicable attainment date.[1] If an area has in fact attained the standard, the stated purpose of the RFP requirement will have already been fulfilled and EPA does not believe that the area need submit revisions providing for the

[1] EPA notes that paragraph (1) of subsection 182(b) is entitled ''PLAN PROVISIONS FOR REASONABLE FURTHER PROGRESS'' and that subparagraph (B) of paragraph 182(c)(2) is entitled ''REASONABLE FURTHER PROGRESS DEMONSTRATION,'' thereby making it clear that both the 15 percent plan requirement of section 182(b)(1) and the 3 percent per year requirement of section 182(c)(2) are specific varieties of RFP requirements.

further emission reductions described in the RFP provisions of section 182(b)(1).

EPA notes that it took this view with respect to the general RFP requirement of section 172(c)(2) in the General Preamble for the Interpretation of Title I of the Clean Air Act Amendments of 1990 (57 FR 13498 (April 16, 1992)), and it is now extending that interpretation to the specific provisions of subpart 2. In the General Preamble, EPA stated, in the context of a discussion of the requirements applicable to the evaluation of requests to redesignate nonattainment areas to attainment, that the ''requirements for RFP will not apply in evaluating a request for redesignation to attainment since, at a minimum, the air quality data for the area must show that the area has already attained. Showing that the State will make RFP towards attainment will, therefore, have no meaning at that point.'' (57 FR 13564)[2]

Second, with respect to the attainment demonstration requirements of section 182(b)(1), an analogous rationale leads to the same result. Section 182(b)(1) requires that the plan provide for ''such specific annual reductions in emissions * * * as necessary to attain the national primary ambient air quality standard by the attainment date applicable under this Act.'' As with the RFP requirements, if an area has in fact monitored attainment of the standard, EPA believes there is no need for an area to make a further submission containing additional measures to achieve attainment. This is also consistent with the interpretation of certain section 172(c) requirements provided by EPA in the General Preamble to Title I, as EPA stated there that no other measures to provide for attainment would be needed by areas seeking redesignation to attainment since ''attainment will have been reached.'' (57 FR 13564; *see also* September 1992 Calcagni memorandum at page 6.) Upon attainment of the NAAQS, the focus of state planning efforts shifts to maintenance of the NAAQS and the development of a maintenance plan under section 175A.

Similar reasoning applies to the contingency measure requirements of section 172(c)(9). EPA has previously interpreted the contingency measure requirement of section 172(c)(9) as no longer being applicable once an area has attained the standard since those ''contingency measures are directed at ensuring RFP and attainment by the applicable date.'' (57 FR 13564; *see also* September 1992 Calcagni memorandum at page 6.) Similarly, as the section 172(c)(9) contingency measures are linked with the RFP requirements of section 182(b)(1), the requirement no longer applies once an area has attained the standard.

EPA emphasizes that the lack of a requirement to submit the SIP revisions discussed above exists only for as long as an area designated nonattainment continues to attain the standard. If EPA subsequently determines that such an area has violated the NAAQS, the basis for the determination that the area need not make the pertinent SIP revisions would no longer exist. The EPA would notify the State of that determination and would also provide notice to the public in the **Federal Register**. Such a determination would mean that the area would have to address the pertinent SIP requirements within a reasonable amount of time, which EPA would establish taking into account the individual circumstances surrounding the particular SIP submissions at issue. Thus, a determination that an area need not submit one of the SIP submittals amounts to no more than a suspension of the requirement for so long as the area continues to attain the standard.

The State must continue to operate an appropriate air quality monitoring network, in accordance with 40 CFR part 58, to verify the attainment status of the area. The air quality data relied upon to determine that the area is attaining the ozone standard must be consistent with 40 CFR part 58 requirements and other relevant EPA guidance and recorded in EPA's Aerometric Information Retrieval System (AIRS).

The determinations that are being made with this **Federal Register** notice are not equivalent to the redesignation of the area to attainment. Attainment of the ozone NAAQS is only one of the criteria set forth in section 107(d)(3)(E) that must be satisfied for an area to be redesignated to attainment. To be redesignated the state must submit and receive full approval of a redesignation request for the area that satisfies all of the criteria of that section, including the requirement of a demonstration that the improvement in the area's air quality is due to permanent and enforceable reductions and the requirements that the area have a fully-approved SIP meeting all of the applicable requirements under section 110 and Part D and a fully-approved maintenance plan.

Furthermore, the determinations made in this notice do not shield an area from future EPA action to require emissions reductions from sources in the area where there is evidence, such as photochemical grid modeling, showing that emissions from sources in the area contribute significantly to nonattainment in, or interfere with maintenance by, other nonattainment areas. EPA has authority under sections 110(a)(2)(A) and 110(a)(2)(D) to require such emission reductions as necessary and appropriate to deal with transport situations.

II. Analysis of Air Quality Data

EPA has reviewed the ambient air monitoring data for ozone (consistent with the requirements contained in 40 CFR part 58 and recorded in AIRS) for the Pittsburgh-Beaver Valley and Reading moderate ozone nonattainment areas in the Commonwealth of Pennsylvania from 1992 through the present time. On the basis of that review EPA has concluded that the area attained the ozone standard during the 1992–94 period and continues to attain the standard at this time.

The current design value for the Pittsburgh-Beaver Valley nonattainment area, computed using ozone monitoring data for 1992 through 1994, is 121 parts per billion (ppb). The average annual number of expected exceedances is 0.7 for that same time period. The current design value for the Reading nonattainment area, computed using ozone monitoring data for 1992 through 1994, is 105 ppb. The average annual number of expected exceedances is 0.3 for that same time period. An area is considered in attainment of the standard if the average annual number of expected exceedances is less than or equal to 1.0. Thus, these areas are no longer recording violations of the air quality standard for ozone. A more detailed summary of the ozone monitoring data for the area is provided in the Technical Support Document for this notice.

EPA is making these determinations without prior proposal. However, in a separate document in this **Federal Register** publication, EPA is proposing to make these determinations should adverse or critical comments be filed. This action will be effective July 10, 1995 unless, within 30 days of publication, adverse or critical comments are received.

If EPA receives such comments, this action will be withdrawn before the effective date by publishing a subsequent notice that will withdraw

[2] *See also* ''Procedures for Processing Requests to Redesignate Areas to Attainment,'' from John Calcagni, Director, Air Quality Management Division, to Regional Air Division Directors, September 4, 1992, at page 6 (stating that the ''requirements for reasonable further progress * * * will not apply for redesignations because they only have meaning for areas not attaining the standard'') (hereinafter referred to as ''September 1992 Calcagni memorandum'').

the final action. All public comments received will then be addressed in a subsequent final rule based on this action serving as a proposed rule. EPA will not institute a second comment period on this action. Any parties interested in commenting on this action should do so at this time. If no such comments are received, the public is advised that this action will be effective on July 10, 1995.

Final Action

EPA has determined that the Pittsburgh-Beaver Valley and Reading ozone nonattainment areas have attained the ozone standard and continue to attain the standard at this time. As a consequence of this determination, the requirements of section 182(b)(1) concerning the submission of the 15 percent plan and ozone attainment demonstration and the requirements of section 172(c)(9) concerning contingency measures are not applicable to the area so long as the area does not violate the ozone standard. Since these areas will not be required to submit 15 percent plans or attainment demonstrations, these areas will not be in the control strategy period for conformity purposes for so long as the areas do not violate the standard. However, the Pittsburgh-Beaver Valley and Reading areas, which are already demonstrating conformity to a submitted maintenance plan pursuant to 40 CFR Part 51, section 51.448(i), may continue to do so, or the Commonwealth may elect to withdraw the applicability of the submitted maintenance plan budget for conformity purposes until the maintenance plan is approved. The applicability may be withdrawn through the submission of a letter from the Governor or his or her designee. If the applicability of the submitted maintenance plan budget is withdrawn for transportation conformity purposes, the build/no-build and less-than-1990 tests will apply until the maintenance plan is approved.

EPA emphasizes that these determinations are contingent upon the continued monitoring and continued attainment and maintenance of the ozone NAAQS in the affected area. When and if a violation of the ozone NAAQS is monitored in the Pittsburgh-Beaver Valley or Reading nonattainment areas (consistent with the requirements contained in 40 CFR part 58 and recorded in AIRS), EPA will provide notice to the public in the **Federal Register**. Such a violation would mean that the area would thereafter have to address the requirements of section 182(b)(1) and section 172(c)(9) since the basis for the determination that they do not apply would no longer exist.

As a consequence of the determination that these areas have attained the NAAQS and that the RFP and attainment demonstration requirements of section 182(b)(1) do not presently apply, the sanctions clocks started by EPA on January 18, 1994, for failure to submit these requirements is hereby stopped since the deficiency for which the clock was started no longer exists.

Nothing in this action should be construed as permitting or allowing or establishing a precedent for any future request for revision to any state implementation plan. Each request for revision to the state implementation plan shall be considered separately in light of specific technical, economic, and environmental factors and in relation to relevant statutory and regulatory requirements.

Under the Regulatory Flexibility Act, 5 U.S.C. 600 *et seq.*, EPA must prepare a regulatory flexibility analysis assessing the impact of any proposed or final rule on small entities. 5 U.S.C. 603 and 604. Alternatively, EPA may certify that the rule will not have a significant impact on a substantial number of small entities. Small entities include small businesses, small not-for-profit enterprises, and government entities with jurisdiction over populations of less than 50,000. Today's determination does not create any new requirements, but suspends the indicated requirements. Therefore, because this notice does not impose any new requirements, I certify that it does not have a significant impact on any small entities affected.

Under Sections 202, 203, and 205 of the Unfunded Mandates Reform Act of 1995 (''Unfunded Mandates Act''), signed into law on March 22, 1995, EPA must undertake various actions in association with proposed or final rules that include a Federal mandate that may result in estimated costs of $100 million or more to the private sector, or to State, local, or tribal governments in the aggregate.

EPA's final action does not impose any federal intergovernmental mandate, as defined in section 101 of the Unfunded Mandates Act, upon the State. No additional costs to State, local, or tribal governments, or to the private sector, result from this action, which suspends the indicated requirements. Thus, EPA has determined that this final action does not include a mandate that may result in estimated costs of $100 million or more to either State, local, or tribal governments in the aggregate, or to the private sector.

This action has been classified as a Table 2 action for signature by the Regional Administrator under the procedures published in the **Federal Register** on January 19, 1989 (54 FR 2214–2225), as revised by an October 4, 1993 memorandum from Michael H. Shapiro, Acting Assistant Administrator for Air and Radiation. The OMB has exempted this regulatory action from E.O. 12866 review.

Under section 307(b)(1) of the Clean Air Act, petitions for judicial review of this action must be filed in the United States Court of Appeals for the appropriate circuit by July 25, 1995. Filing a petition for reconsideration by the Administrator of this final rule does not affect the finality of this rule for the purposes of judicial review nor does it extend the time within which a petition for judicial review may be filed, and shall not postpone the effectiveness of such rule or action. This action may not be challenged later in proceedings to enforce its requirements. (See section 307(b)(2)).

List of Subjects in 40 CFR Part 52

Environmental protection, Air pollution control, Hydrocarbons, Intergovernmental relations, Nitrogen dioxide, Ozone.

Dated: May 16, 1995.

Stanley Laskowski,

Acting Regional Administrator, Region III.

40 CFR part 52, subpart NN of chapter I, title 40 is amended as follows:

PART 52—[AMENDED]

1. The authority citation for part 52 continues to read as follows:

Authority: 42 U.S.C. 7401–7671q.

Subpart NN—Pennsylvania

2. Section 52.2037 is amended by adding paragraph (b) to read as follows:

§ 52.2037 Control Strategy: Carbon monoxide and ozone (hydrocarbons).

* * * * *

(b)(1) Determination—EPA has determined that, as of July 10, 1995, the Pittsburgh-Beaver Valley ozone nonattainment area has attained the ozone standard and that the reasonable further progress and attainment demonstration requirements of section 182(b)(1) and related requirements of section 172(c)(9) of the Clean Air Act do not apply to this area for so long as the area does not monitor any violations of the ozone standard. If a violation of the ozone NAAQS is monitored in the Pittsburgh-Beaver Valley ozone nonattainment area, these determinations shall no longer apply.

(2) Determination—EPA has determined that, as of July 10, 1995, the Reading ozone nonattainment area has attained the ozone standard and that the reasonable further progress and attainment demonstration requirements of section 182(b)(1) and related requirements of section 172(c)(9) of the Clean Air Act do not apply to this area for so long as the area does not monitor any violations of the ozone standard. If a violation of the ozone NAAQS is monitored in the Reading ozone nonattainment area, these determinations shall no longer apply.

[FR Doc. 95–13004 Filed 5–25–95; 8:45 am]

BILLING CODE 6560–50–P

---

40 CFR Part 300

[FRL–5211–3]

National Priorities List for Uncontrolled Hazardous Waste Sites

AGENCY: Environmental Protection Agency.

ACTION: Final rule.

SUMMARY: The Comprehensive Environmental Response, Compensation, and Liability Act of 1980 (''CERCLA'' or ''the Act''), as amended, requires that the National Oil and Hazardous Substances Pollution Contingency Plan (''NCP'') include a list of national priorities among the known releases or threatened releases of hazardous substances, pollutants, or contaminants throughout the United States. The National Priorities List (''NPL'') constitutes this list.

This rule adds 1 new site to the NPL. The NPL is intended primarily to guide the Environmental Protection Agency (''EPA'' or ''the Agency'') in determining which sites warrant further investigation to assess the nature and extent of public health and environmental risks associated with the site and to determine what CERCLA-financed remedial action(s), if any, may be appropriate.

EFFECTIVE DATE: June 26, 1995.

ADDRESSES: For addresses for the Headquarters and Regional dockets, as well as further details on what these dockets contain, see ''Information Available to the Public'' in Section I of the ''Supplementary Information'' portion of this preamble.

FOR FURTHER INFORMATION CONTACT: Terry Keidan, Hazardous Site Evaluation Division, Office of Emergency and Remedial Response (mail code 5204G), U.S. Environmental Protection Agency, 401 M Street, SW, Washington, DC, 20460, or the Superfund Hotline, phone (800) 424–9346 or (703) 412–9810 in the Washington, DC, metropolitan area.

SUPPLEMENTARY INFORMATION:

I. Introduction.
II. Contents of This Final Rule.
III. Executive Order 12866.
IV. Unfunded Mandates.

I. Introduction

Background

In 1980, Congress enacted the Comprehensive Environmental Response, Compensation, and Liability Act, 42 U.S.C. 9601–9675 (''CERCLA'' or ''the Act''), in response to the dangers of uncontrolled hazardous waste sites. CERCLA was amended on October 17, 1986, by the Superfund Amendments and Reauthorization Act (''SARA''), Public Law No. 99–499, stat. 1613 *et seq.* To implement CERCLA, EPA promulgated the revised National Oil and Hazardous Substances Pollution Contingency Plan (''NCP''), 40 CFR Part 300, on July 16, 1982 (47 FR 31180), pursuant to CERCLA section 105 and Executive Order 12316 (46 FR 42237, August 20, 1981). The NCP sets forth the guidelines and procedures needed to respond under CERCLA to releases and threatened releases of hazardous substances, pollutants, or contaminants. EPA has revised the NCP on several occasions. The most recent comprehensive revision was on March 8, 1990 (55 FR 8666).

Section 105(a)(8)(A) of CERCLA requires that the NCP include ''criteria for determining priorities among releases or threatened releases throughout the United States for the purpose of taking remedial action* * * and, to the extent practicable taking into account the potential urgency of such action, for the purpose of taking removal action.'' ''Removal'' actions are defined broadly and include a wide range of actions taken to study, clean up, prevent or otherwise address releases and threatened releases. 42 USC 9601(23). ''Remedial'' actions'' are those ''consistent with permanent remedy, taken instead of or in addition to removal actions. * * *'' 42 USC 9601(24).

Pursuant to section 105(a)(8)(B) of CERCLA, as amended by SARA, EPA has promulgated a list of national priorities among the known or threatened releases of hazardous substances, pollutants, or contaminants throughout the United States. That list, which is Appendix B of 40 CFR Part 300, is the National Priorities List (''NPL'').

CERCLA section 105(a)(8)(B) defines the NPL as a list of ''releases'' and as a list of the highest priority ''facilities.'' The discussion below may refer to the ''releases or threatened releases'' that are included on the NPL interchangeably as ''releases,'' ''facilities,'' or ''sites.''

CERCLA section 105(a)(8)(B) also requires that the NPL be revised at least annually. A site may undergo remedial action financed by the Trust Fund established under CERCLA (commonly referred to as the ''Superfund'') only after it is placed on the NPL, as provided in the NCP at 40 CFR 300.425(b)(1). However, under 40 CFR 300.425(b)(2) placing a site on the NPL ''does not imply that monies will be expended.'' EPA may pursue other appropriate authorities to remedy the releases, including enforcement action under CERCLA and other laws.

The purpose of the NPL is merely to identify releases that are priorities for further evaluation. Although a CERCLA ''facility'' is broadly defined to include any area where a hazardous substance release has ''come to be located'' (CERCLA section 101(9)), the listing process itself is not intended to define or reflect the boundaries of such facilities or releases.

It is the Agency's policy that, in the exercise of its enforcement discretion, EPA will not take enforcement actions against an owner of residential property to require such owner to undertake response actions or pay response costs, unless the residential homeowner's activities lead to a release or threat of release of hazardous substances, resulting in the taking of a response action at the site (OSWER Directive #9834.6, July 3, 1991). This policy includes residential property owners whose property is located above a ground water plume that is proposed to or on the NPL, where the residential property owner did not contribute to the contamination of the site. EPA may, however, require access to that property during the course of implementing a clean up.

Three mechanisms for placing sites on the NPL for possible remedial action are included in the NCP at 40 CFR 300.425(c) (55 FR 8845, March 8, 1990). Under 40 CFR 300.425(c)(1), a site may be included on the NPL if it scores sufficiently high on the Hazard Ranking System (''HRS''), which EPA promulgated as Appendix A of 40 CFR Part 300. On December 14, 1990 (55 FR 51532), EPA promulgated revisions to the HRS partly in response to CERCLA section 105(c), added by SARA. The revised HRS evaluates four pathways: ground water, surface water, soil exposure, and air. The HRS serves as a screening device to evaluate the relative

potential of uncontrolled hazardous substances to pose a threat to human health or the environment. As a matter of Agency policy, those sites that score 28.50 or greater on the HRS are eligible for the NPL.

Under a second mechanism for adding sites to the NPL, each State may designate a single site as its top priority, regardless of the HRS score. This mechanism, provided by the NCP at 40 CFR 300.425(c)(2), requires that, to the extent practicable, the NPL include within the 100 highest priorities, one facility designated by each State representing the greatest danger to public health, welfare, or the environment among known facilities in the State.

The third mechanism for listing, included in the NCP at 40 CFR 300.425(c)(3), allows certain sites to be listed regardless of their HRS score, if all of the following conditions are met:

- The Agency for Toxic Substances and Disease Registry (ATSDR) of the U.S. Public Health Service has issued a health advisory that recommends dissociation of individuals from the release.
- EPA determines that the release poses a significant threat to public health.
- EPA anticipates that it will be more cost-effective to use its remedial authority (available only at NPL sites) than to use its removal authority to respond to the release.

EPA promulgated an original NPL of 406 sites on September 8, 1983 (48 FR 40658). The NPL has been expanded since then, most recently on April 25, 1995 (60 FR 20335).

The NPL includes two sections, one of sites that are evaluated and cleaned up by EPA (the ''General Superfund Section''), and one of sites being addressed by other Federal agencies (the ''Federal Facilities Section''). Under Executive Order 12580 (52 FR 2923, January 29, 1987) and CERCLA section 120, each Federal agency is responsible for carrying out most response actions at facilities under its own jurisdiction, custody, or control, although EPA is responsible for preparing an HRS score and determining whether the facility is placed on the NPL. EPA is not the lead agency at these sites, and its role at such sites is accordingly less extensive than at other sites. The Federal Facilities Section includes those facilities at which EPA is not the lead agency.

Deletions/Cleanups

EPA may delete sites from the NPL where no further response is appropriate under Superfund, as explained in the NCP at 40 CFR 300.425(e) (55 FR 8845, March 8, 1990). To date, the Agency has deleted 77 sites from the General Superfund Section of the NPL. EPA also has developed an NPL construction completion list (''CCL'') to simplify its system of categorizing sites and to better communicate the successful completion of cleanup activities (58 FR 12142, March 2, 1993). Sites qualify for the CCL when:

(1) any necessary physical construction is complete, whether or not final cleanup levels or other requirements have been achieved;

(2) EPA has determined that the response action should be limited to measures that do not involve construction (e.g., institutional controls); or

(3) the site qualifies for deletion from the NPL.

Inclusion of a site on the CCL has no legal significance.

In addition to the 76 sites that have been deleted from the NPL because they have been cleaned up (the Waste Research and Reclamation site was deleted based on deferral to another program and is not considered cleaned up), an additional 216 sites are also in the NPL CCL, all but four from the General Superfund Section. Thus, as of May 1995, the CCL consists of 292 sites.

Cleanups at sites on the NPL do not reflect the total picture of Superfund accomplishments. As of March 31, 1995, EPA had conducted 661 removal actions at NPL sites, and 2,413 removal actions at non-NPL sites. Information on removals is available from the Superfund hotline.

Action In This Notice

This final rule adds 1 site, Southern Shipbuilding in Slidell, Louisiana, to the General Superfund Section of the NPL. This site is added to the NPL based on an HRS score of 28.5 or greater. This actions result in an NPL of 1,237 sites, 1,082 of them in the General Superfund Section and 155 of them in the Federal Facilities Section. On April 25, 1995 (59 FR 65206) EPA published the most recent complete list of NPL sites to which the Southern Shipbuilding site is being added. An additional 49 sites remain proposed, 42 in the General Superfund Section and 7 in the Federal Facilities Section, and are awaiting final Agency action. Final and proposed sites now total 1,286.

Clarification

The full name of the Fremont National Forest/White King and Lucky Lass Uranium Mines (USDA) site, which was added to the NPL on April 25, 1995 (60 FR 20330), was inadvertantly shortened in EPA's **Federal Register** notice. For the record, the full name of this site is Fremont National Forest/White King and Lucky Lass Uranium Mines (USDA). However, this name will continue to appear in its shortened version in Appendix B to part 300—The National Priorities List and other automated public information lists due to space limitations within the NPL database.

Information Available to the Public

The Headquarters and Regional public dockets for the NPL contain documents relating to the evaluation and scoring of the site in this final rule. The dockets are available for viewing, by appointment only, after the appearance of this action. The hours of operation for the Headquarters docket are from 9:00 a.m. to 4:00 p.m., Monday through Friday, excluding Federal holidays. Please contact the Regional Docket for hours.

Addresses and phone numbers for the Headquarters and Regional dockets follow:

Docket Coordinator, Headquarters, U.S. EPA CERCLA Docket Office, Crystal Gateway #1, 12th Floor, 1235 Jefferson Davis Highway, Arlington, VA 703/603–8917

(Please note this is viewing address only. Do not mail documents to this address.)

Bart Canellas, Region 6, U.S. EPA, 1445 Ross Avenue, Mail Code 6H–MA, Dallas, TX 75202–2733, 214/655–6740

The Headquarters docket for this rule contains HRS score sheets for the final site; the Documentation Record for the site describing the information used to compute the score; pertinent information regarding statutory requirements or EPA listing policies that affect the site; and a list of documents referenced in the Documentation Record. The Headquarters docket also contains comments received; and the Agency's responses to those comments. The Agency's responses are contained in the ''Support Document for the Revised National Priorities List Final Rule—May 1995.''

A general discussion of the statutory requirements affecting NPL listing, the purpose and implementation of the NPL, the economic impacts of NPL listing, and the analysis required under the Regulatory Flexibility Act is included as part of the Headquarters rulemaking docket in the ''Additional Information'' document.

The Regional docket contains all the information in the Headquarters docket, plus the actual reference documents containing the data principally relied

upon by EPA in calculating or evaluating the HRS score for the site. These reference documents are available only in the Regional docket.

Interested parties may view documents, by appointment only, in the Headquarters or Regional Dockets, or copies may be requested from the Headquarters or Regional Dockets. An informal written request, rather than a formal request under the Freedom of Information Act, should be the ordinary procedure for obtaining copies of any of these documents. If you wish to obtain documents by mail from EPA Headquarters Docket, the mailing address is as follows: Docket Coordinator, Headquarters, U.S. EPA CERCLA Docket Office (Mail Code 5201G), 1401 M Street, SW., Washington, DC 20460, 703/603–8917. (Please note this is the mailing address only. If you wish to visit the HQ Docket to view documents, see viewing address above.)

II. Contents of This Action

This action promulgates a final rule to add 1 site to the General Superfund Section of the NPL. This site is Southern Shipbuilding in Slidell, Louisiana which was proposed on February 13, 1995 in NPL Proposal #18 (60 FR 8212) based on an HRS score of 28.5 or greater. The group number identified for this site is 5/6. Group numbers are determined by arranging the NPL by rank and dividing it into groups of 50 sites. For example, a site in Group 4 has a score that falls within the range of scores covered by the fourth group of 50 sites on the NPL.

Public Comments

EPA reviewed all comments received on the site included in this notice. The formal comment period ended on April 14, 1995.

EPA's response to site-specific public comments and explanations of any score changes made as a result of such comments are addressed in the ''Support Document for the Revised National Priorities List Final Rule—May 1995.''

III. Executive Order 12866

The Office of Management and Budget (OMB) has exempted this regulatory action from Executive Order 12866 review.

IV. Unfunded Mandates

Under Section 202 of the Unfunded Mandates Reform Act of 1995 (''Unfunded Mandates Act''), signed into law on March 22, 1995, EPA must prepare a written statement to accompany any rules that have ''Federal mandates'' that may result in the expenditure by the private sector of $100 million or more in any one year. Under Section 205, EPA must select the most cost-effective and least burdensome alternative that achieves the objective of such a rule and that is consistent with statutory requirements. Section 203 requires EPA to establish a plan for informing and advising any small governments that may be significantly and uniquely affected by the rule.

The Unfunded Mandates Act defines a ''Federal private sector mandate'' for regulatory purposes as one that, among other things, ''would impose an enforceable duty upon the private sector.'' EPA finds that today's listing decision does not impose any enforceable duties upon the private sector since inclusion of a site on the NPL does not itself impose any costs. It does not establish that EPA necessarily will undertake remedial action, nor does it require any action by a private party or determine its liability for site response costs. Costs that arise out of site responses result from site-by-site decisions about what actions to take, not directly from the act of listing itself. Therefore, today's rulemaking is not a ''Federal private sector mandate'' and is not subject to the requirements of sections 202 or 205 of the Unfunded Mandates Act. As to Section 203 of this Act, EPA finds that small governments will not be significantly and uniquely affected by this rulemaking.

List of Subjects in 40 CFR Part 300

Environmental protection, Air pollution control, Chemicals, Hazardous materials, Intergovernmental relations, Natural resources, Oil pollution, Reporting and recordkeeping requirements, Superfund, Waste treatment and disposal, Water pollution control, Water supply.

Dated: May 22, 1995.

Elliott P. Laws,

Assistant Administrator, Office of Solid Waste and Emergency Response.

40 CFR part 300 is amended as follows:

PART 300—[AMENDED]

1. The authority citation for Part 300 continues to read as follows:

Authority: 33 U.S.C. 1321(c)(2); 42 U.S.C. 9601–9657; E.O. 12777, 56 FR 54757, 3 CFR, 1991 Comp., p. 351; E.O. 12580, 52 FR 2923, 3 CFR, 1987 Comp., p. 193.

2. Appendix B to Part 300 is amended by adding the Southern Shipbuilding site in Slidell, Louisiana, to Table 1, General Superfund Section, in alphabetical order.

[FR Doc. 95–12995 Filed 5–25–95; 8:45 am]

BILLING CODE 6560–50–P

DEPARTMENT OF HEALTH AND HUMAN SERVICES

Public Health Service

45 CFR Part 60

RIN 0905–AE53

National Practitioner Data Bank for Adverse Information on Physicians and Other Health Care Practitioners; Payment of Fees

AGENCY: Health Resources and Services Administration, PHS, HHS.

ACTION: Final rule.

SUMMARY: This final rule amends the existing regulations governing the National Practitioner Data Bank for Adverse Information on Physicians and Other Health Care Practitioners (the Data Bank) authorizing the reporting and release of information concerning: Payments made for the benefit of physicians, dentists, and other health care practitioners as a result of medical malpractice actions or claims; and certain adverse actions taken regarding the licenses and clinical privileges of physicians and dentists. This final rule removes restrictions on allowed methods of payment for Data Bank fees.

EFFECTIVE DATE: This regulation is effective May 26, 1995.

FOR FURTHER INFORMATION CONTACT: Thomas C. Croft, Director, Division of Quality Assurance, Bureau of Health Professions, Health Resources and Services Administration, Room 8A–55, 5600 Fishers Lane, Rockville, Maryland 20857; telephone number (301) 443–2300.

SUPPLEMENTARY INFORMATION: This final rule amends the existing regulations for the National Practitioner Data Bank for Adverse Information on Physicians and Other Health Care Practitioners under 45 CFR part 60. Section 60.12(c)(1) and (2) currently state that requests to the Data Bank constitute an agreement to pay the established user fee and that the billing of such use will be made during established intervals. Section 60.12(c)(3) currently states that Data Bank fees must be paid by check or money order made payable to the U.S. Department of Health and Human Services. The Department has removed these regulatory restrictions on allowable methods of payment to permit the Secretary to announce alternate

payment methods through periodic notice in the **Federal Register**. Paragraph (c)(4) is being redesignated as (c) and revised to allow the Data Bank the flexibility: (1) to streamline and automate its approach to fee collection; and (2) to offer a greater variety of payment options to its users, thereby improving customer service. Paragraphs (c)(1), (2), and (3) are deleted.

Justification for Omitting Notice of Proposed Rulemaking

Since these amendments to the Data Bank regulations are of a technical nature and only amend the regulations to reflect the fee payment practices of the Data Bank, the Secretary has determined, pursuant to 5 U.S.C. 553 and departmental policy that it is unnecessary and impractical to follow proposed rulemaking procedures or to delay the effective data of these regulations.

Economic Impact

Executive Order 12866 requires that all regulations reflect consideration of alternatives, of costs, of benefits, or incentives, of equity, and of available information. Regulations must meet certain standards, such as avoiding unnecessary burden. Regulations which are ''significant'' because of cost, adverse effects on the economy, inconsistency with other agency actions, effects on the budget, or novel legal or policy issue, require special analysis.

The Department believes that the resources required to implement the requirements in these regulations are minimal. This final rule simply removes restrictions on the number of options available to users of the Data Bank. Therefore, in accordance with the Regulatory Flexibility Act of 1980, the Secretary certifies that these regulations will not have a significant impact on a substantial number of small entities. For the same reasons, the Secretary has also determined that this is not a ''significant'' rule under Executive Order 12866.

Paperwork Reduction Action of 1980

These amendments do not affect the recordkeeping or reporting requirements in the existing regulations for the National Practitioner Data Bank for Adverse Information on Physicians and Other Health Care Practitioners.

List of Subjects in 45 CFR Part 60

Health professions, Insurance companies, Malpractice, Reporting and recordkeeping requirements.

Dated: April 11, 1995.

Philip R. Lee,

Assistant Secretary for Health.

Approved: May 19, 1995.

Donna E. Shalala,

Secretary.

Accordingly, 45 CFR part 60 is amended as set forth below:

PART 60— NATIONAL PRACTITIONER DATA BANK FOR ADVERSE INFORMATION PHYSICIANS AND OTHER HEALTH CARE PRACTITIONERS

1. The authority citation for 45 CFR part 60 continues to read as follows:

Authority: Secs. 401–432 of the Health Care Quality Improvement Act of 1986, Pub. L. 99–660, 100 Stat. 3784–3794, as amended by section 402 of Pub. L. 100–177, 101 Stat. 1007–1008 (42 U.S.C. 11101–11152.)

2. Section 60.12 is amended by revising paragraph (c) to read as follows:

§ 60.12 Fees applicable to requests for information.

* * * * *

(c) *Assessing and collecting fees.* The Secretary will announce through notice in the **Federal Register** from time to time the methods of payment of Data Bank fees. In determining these methods, the Secretary will consider efficiency, effectiveness, and convenience for the Data Bank users and the Department. Methods may include: credit card; electronic fund transfer; check; and money order.

[FR Doc. 95–12907 Filed 5–25–95; 8:45 am]

BILLING CODE 4160–15–P

FEDERAL COMMUNICATIONS COMMISSION

47 CFR Part 73

[MM Docket No. 94–51; RM–8466]

Radio Broadcasting Services; Mamou and Jonesville, LA

AGENCY: Federal Communications Commission.

ACTION: Final rule.

SUMMARY: The Commission adopts a petition for reconsideration filed by Simla B. Ellis, d/b/a SoTo Broadcasting, permittee of Station KAHK(FM), Channel 266A, Mamou, Louisiana. The Commission substitutes Channel 266C3 for Channel 266A at Mamou, Louisiana, and modifies the construction permit of Station KAHK(FM) to specify operation on the higher powered channel. To accommodate the upgrade at Mamou, the Commission also substitutes Channel 286A for vacant Channel 266A at Jonesville, Louisiana. *See* 59 FR 51153, October 7, 1994. Both channels can be allotted in compliance with the Commission's minimum distance separation requirements. Channel 266C3 at Mamou has a site restriction of 12.2 kilometers (7.6 miles) east to accommodate Ellis' desired site. The coordinates for Channel 266C3 at Mamou are North Latitude 30–39–42 and West Longitude 92–17–52. The coordinates for Channel 286A at Jonesville are North Latitude 31–35–38 and West Longitude 91–45–23.

With this action, this proceeding is terminated.

EFFECTIVE DATE: July 7, 1995.

FOR FURTHER INFORMATION CONTACT: Pam Blumenthal, Mass Media Bureau, (202) 418–2180.

SUPPLEMENTARY INFORMATION: This is a synopsis of the Commission's *Memorandum Opinion and Report,* MM Docket No. 94–51, adopted May 11, 1995, and released May 23, 1995. The full text of this Commission decision is available for inspection and copying during normal business hours in the FCC Reference Center (Room 239), 1919 M Street, NW, Washington, DC. The complete text of this decision may also be purchased from the Commission's copy contractor, ITS, Inc., (202) 857–3800, 2100 M Street, NW, Suite 140, Washington, DC 20037.

List of Subjects in 47 CFR Part 73

Radio broadcasting.

PART 73—[AMENDED]

1. The authority citation for Part 73 continues to read as follows:

Authority: Sec. 303, 48 Stat., as amended, 1082; 47 U.S.C. 154, as amended.

§ 73.202 [Amended]

2. Section 73.202(b), the Table of FM Allotments under Louisiana, is amended by removing Channel 266A and adding Channel 266C3 at Mamou; and by removing Channel 266A and adding Channel 286A at Jonesville.

Federal Communications Commission.

Douglas W. Webbink,

Chief, Policy and Rules Division, Mass Media Bureau.

[FR Doc. 95–12959 Filed 5–25–95; 8:45 am]

BILLING CODE 6712–01–F

DEPARTMENT OF TRANSPORTATION

Federal Railroad Administration

49 CFR Part 229

[Docket No. LI–7; Notice 6]

RIN 2130–AA53

Event Recorders

AGENCY: Department of Transportation (DOT), Federal Railroad Administration (FRA).

ACTION: Final rule; response to petitions for reconsideration.

SUMMARY: In response to petitions for reconsideration, FRA is amending its regulation on event recorders. FRA is removing the requirement that, following an accident reportable to the National Transportation Safety Board, the railroad must refrain from extracting or analyzing event recorder data for a period of 8 hours or until that agency notifies the railroad that it will not conduct an investigation, whichever comes first. FRA is also amending the definition of ''lead locomotive'' to provide greater latitude for the location of event recorders and is simplifying the requirements for removing event recorders from service.

DATES: This rule is effective May 26, 1995. The final rule, as published in the **Federal Register** for July 8, 1993 (58 FR 36605), was effective November 5, 1993. The date for compliance with the duty to have an in-service event recorder in the lead locomotive of any train operated faster than 30 miles per hour (§ 229.135(a)) is May 5, 1995.

FURTHER INFORMATION CONTACT: Rolf Mowatt-Larssen, Chief, Motive Power and Equipment Division, Office of Safety Enforcement, RRS–14, Room 8326, Federal Railroad Administration, Department of Transportation, 400 Seventh Street SW., Washington, DC 20590 (telephone 202–366–4094), or Thomas A. Phemister, Trial Attorney, Office of Chief Counsel, Federal Railroad Administration, 400 Seventh Street SW., Washington, DC 20590 (telephone 202–366–0635).

SUPPLEMENTARY INFORMATION: On July 8, 1993, FRA published a Final Rule in this docket in the **Federal Register**. 58 FR 36605. That rule requires trains operated at speeds in excess of 30 miles per hour to be equipped with an event recorder in the lead locomotive, requires maintenance of event recorders, and requires post-accident security for data in the recorder. FRA received petitions for reconsideration and requests for clarification from several parties. This notice is the agency's response, arranged by topic.

Compliance Date

The original publication of this rule included a mistakenly calculated date for compliance with the duty to equip the lead locomotive on a train operated faster than 30 miles per hour. A correction was published in the **Federal Register** for July 28, 1993 (58 FR 40468), but that correction has not been published in the bound volume of the Code of Federal Regulations. The correct date for compliance with the duty to equip locomotives was 18 months after the effective date of the final rule in this docket, or May 5, 1995. This notice rewrites § 229.135(a) to include that date.

Post-Accident Data Security

On July 8, 1993, FRA published a Final Rule in this docket in the **Federal Register**. 58 FR 36605. That rule, at § 229.135(d)(1), stated

> *Accidents Reportable to the National Transportation Safety Board.* If any locomotive equipped with an event recorder is involved in an accident that is required to be reported to the National Transportation Safety Board (see 49 CFR Part 840), the railroad using the locomotive shall make no attempt, except by the direction of a representative of the Board, or as may be necessary to preserve the data from destruction, to extract or analyze the recorded data until 8 hours have passed from the time the accident is reported to the National Response Center, or until the Board declares that it will not conduct an investigation of the accident, whichever comes first. If, within the 8- hour period, the Board notifies the railroad that an investigation will be conducted, the railroad will be governed by the Board's instructions; if the Board notifies the railroad that an investigation will not be conducted, or if the Board fails to give notification within the 8-hour period, the railroad may extract the data consistent with the preservation requirements of paragraph (d)(2) of this section.

FRA adopted this requirement in consideration of the comments made in writing in response to the Advance Notice of Proposed Rulemaking (November 23, 1988, 53 FR 47557) and the Notice of Proposed Rulemaking (June 18, 1991, 56 FR 27931) and at the hearings held as part of both earlier notices and after consulting with the National Transportation Safety Board (Safety Board). It was FRA's understanding that this provision advanced railroad transportation safety and met the Safety Board's needs.

The Association of American Railroads (AAR), in its petition for reconsideration, argues that FRA does not have the power to issue § 229.135(d)(1) and that, if it has the power, it has exercised that power unlawfully. AAR also urges FRA to facilitate the railroads' needs for access to event recorder data as soon as possible after an accident. Finally, AAR states its opinion that FRA's actions in this regard are ''not a good idea'' as a matter of policy.

Union Pacific Railroad Company (UP) also included the issue of post-accident data security in its petition for reconsideration, arguing that railroads should have immediate access to event recorder data at all times. UP buttresses its argument by stating that railroads need event recorder data to facilitate their own accident investigations. Quick access to event recorder data may, for instance, lead to immediate operational improvements or may aid in pinpointing physical evidence that needs to be examined before the track is restored to service or, presumably, before rail equipment is removed from the scene.

Canadian Pacific Legal Services, filing a petition for reconsideration on behalf of CP Rail System (CPRS), echoes the need to have immediate access to event recorder data in the wake of an accident.

While the Safety Board both urged and endorsed the data security rule quoted above, it has re-evaluated this language in light of its own Notice of Proposed Rulemaking, published June 19, 1991 (56 FR 28132). In a letter to FRA dated October 1, 1993, the Board said that it believes that the language of § 229.135(d)(1) ''may place a regulatory burden on both the Safety Board and the railroad industry that goes beyond that required for the efficient discharge of the Safety Board's accident investigation program.'' In light of a reassessment of FRA's rule and considering the comments filed in response to its own notice, the Board has decided to explore a revision to its earlier proposal and has requested that FRA withdraw § 229.135(d)(1).

FRA finds no merit in AAR's arguments that FRA does not have the power to act as it did or that it exercised that power unlawfully. Because FRA is granting the relief sought by AAR and others, this issue need not be explored further, but AAR's statement about FRA's ''power'' misses the impact of the Federal railroad safety laws, and the delegations under them. These enactments, for instance, extend to FRA the authority to prescribe regulations for every area of railroad safety (49 U.S.C. 20103). Certainly post-accident data security is one such area.

FRA, however, agrees with railroads' need for early access to event recorder data and believes that the current

§ 229.135(d)(2) will provide the data security it needs while at the same time facilitating the railroad's own legitimate accident investigation priorities. For the reasons stated, FRA grants the petitions for reconsideration insofar as they request withdrawal of § 229.135(d)(1) and amends the regulations accordingly. The language now in § 229.135(d)(2) will survive as a new paragraph (d)(1) and the explanation of the relation of this regulation to other laws, now in paragraph (d)(3), will be preserved as a new § 229.135(d)(2).

Lead Locomotive

The final rule, at § 229.135(a), states:

(a) *Duty to equip*. Effective [insert a date 18 months after the effective date of a final rule in this docket], and except as provided in paragraph (b) of this section, any train operated faster than 30 miles per hour shall have an in-service event recorder in the lead locomotive. For the purpose of this section ''train'' includes a locomotive or group of locomotives with or without cars and ''lead locomotive'' means the locomotive from whose cab the crew is operating the train and, when cab control locomotives and/or MU locomotives are coupled together, is the first locomotive proceeding in the direction of movement.

Several interested parties, including the Association of American Railroads (AAR), the American Public Transit Association (APTA), Union Pacific Railroad Company (UP), Metro-North Commuter Railroad Company (MN), and The Long Island Rail Road Company (LIRR) requested FRA to clarify the term ''lead locomotive'' so that it would accommodate the operations of carriers using cab control cars, married pairs of cars, and other similar configurations.

FRA stated in the preamble (58 FR 36610–11) that the agency ''has determined that the recorder will be most helpful if it records the events happening in the locomotive occupied by the engineer, that is, the lead locomotive.'' FRA also noted that it was

Aware that push-pull commuter operations don't have a traditional 'locomotive' at the lead in one direction and that this may present problems in some cases. The ideal solution would be for the actions taken at the engineer's stand in the control car to be recorded on the device in the locomotive.

FRA's primary concern is still as it was when the preamble was written: to provide the best data for analysis, the recorder must capture what the engineer sees and does.

In light of the submissions since the final rule was published, FRA recognizes that its definition of ''lead locomotive'' is unnecessarily geographically strict. The definition in the current § 229.135(a) will be amended by adding the following sentence:

The duty to equip the lead locomotive may be satisfied with an event recorder located elsewhere provided that such event recorder monitors and records the required data as though it were located in the lead locomotive.

Notice of Equipped Status/Removal from Service

Several parties requested clarification on the proper means for indicating that a locomotive is equipped with an event recorder or that the recorder is, or has been taken, out of service. These parties also asked whether a locomotive, once equipped with an event recorder, must always remain equipped with an event recorder.

FRA's final event recorder rule does not impose any burden to keep event recorders on locomotives merely because they were once so equipped. The rule very clearly mandates a recorder on the lead locomotive of all trains operated faster than 30 miles per hour. Thus, a railroad deciding to limit certain locomotives to slow speed service, where they would not operate faster than 30 miles per hour, is permitted to remove the recorders from that equipment.

The current rule contains no specific requirement that an *equipped* locomotive be marked in any way. FRA is aware that there are many ways to tell if a locomotive is recorder-equipped, from the physical presence of an apparatus to the ''Canadian'' method, in which the locomotive is limited so that it *cannot* assume the lead position unless the recorder is operative according to its own self-test. As noted in the next section on testing and maintaining recorders, block 15, item 5 of the cab card (FRA Form 6180–49A) will note the successful completion of periodic testing and maintenance on the event recorder. FRA believes that the best way to be certain that a locomotive has an event recorder is to note that fact on the reverse side of the cab card, under the ''**REMARKS:**'' section. Section 229.135(a) is amended to require annotating the cab card when a locomotive is equipped with an event recorder unless the recorder is designed to prohibit the locomotive from assuming the lead position if it is not functioning.

The current rule does, however, contain a requirement at § 229.135(c) that an out-of-service recorder be tagged, and the tag described in § 229.9(a)(3) is given as an example of a proper method of marking a malfunctioning recorder. While ''tagging'' may be suitable for older recorders, it does not serve a purpose where the recorder is buried within the electrical panel or fully integrated into the electrical system. Since the final rule was issued, it has become clear that more flexibility is necessary to accommodate different types of event recorders. Accordingly, FRA is amending current § 229.135(c) so that annotating the cab card (Form FRA F6180–49A), on the reverse side, under ''**REMARKS:**'' becomes the method of noting the out-of-service status of a recorder. Part 229 requires each locomotive to have a cab card to record the results of periodic inspections so there will be no burden to apply an extra tag. As a matter of enforcement policy, FRA will instruct its inspectors to look on the cab card first for notes about the event recorder status of a locomotive.

Once equipped, always equipped? The inquiries about departure testing at the conclusion of the periodic inspection also raise the issue about whether or not a locomotive, equipped with an event recorder, must always remain equipped. The primary requirement of the rule, as it relates to equipment, is that the lead locomotive of a train operated faster than 30 miles per hour must have an event recorder (from and after May 5, 1995). Section 21 of the Rail Safety Improvement Act of 1988 (RSIA), Pub.L. 100–342, 102 Stat. 624 (June 22, 1988), now codified at 49 U.S.C. 20138, prescribed rules ''to prohibit the willful tampering with, or disabling of * * * railroad safety or operational monitoring devices,'' including event recorders. In its final rule proscribing tampering with safety devices, published February 3, 1989 (54 FR 5485) (the rules appear at Subpart D of Part 218), FRA required installed event recorders to be operative unless the locomotive was being hauled dead-in-tow or unless the event recorder became inoperative enroute, in which case FRA imposed a notification requirement similar to that used for certain signal-related equipment that controls or restricts train operations. The AAR filed a petition for reconsideration in that Docket. The final rule in this docket responded in part to that petition.

While this rule requires event recorders to be in operating order at the time the locomotive is cleared from the quarterly inspection, these devices, like any mechanical or electronic device, are subject to random failures. FRA sees no safety benefit in severely restricting the operation of a locomotive costing upwards of a million dollars because of the failure of a fifty-dollar part in a blackbox. The final rule in this docket permits operation of a locomotive with

an event recorder known to have failed, but it cannot be the sole power, nor the lead locomotive, on a train operated faster than 30 miles per hour. Section 229.135(c) is amended to read:

(c) *Removal from Service.* A railroad may remove an event recorder from service, and, if a railroad knows that an event recorder is not monitoring or recording the data specified in § 229.5(g), shall remove the event recorder from service. When a railroad removes an event recorder from service, a qualified person shall cause to be recorded the date the device was removed from service on Form FRA F6180–49A, under the REMARKS section. An event recorder designed to allow the locomotive to assume the lead position only if the recorder is properly functioning is not required to have its removal from service noted on Form FRA F6180–49A.

This rule will ensure the integrity of the periodic inspection because, when the person conducting the inspection on electrical equipment signs the cab card, that signature will attest to the fact that the event recorder is in working order. At the same time, the rule will permit railroads, for operational reasons of their own, to have event recorders in fewer than all of their locomotives. Simply put, if a locomotive is equipped with an event recorder, the recorder must be in operating order before the locomotive is released from the periodic inspection. If the flexibility FRA has designed into this rule is abused by the railroads, FRA will not hesitate to impose a stricter standard.

Testing and Maintaining Recorders

The current regulations require inspection at the quarterly intervals specified in § 229.25. The recorder must be tested prior to performing any maintenance work and, if it fails, must be repaired and tested until a subsequent test is successful. A record of the inspection and test, including a copy of the data verification results, must be maintained until the next quarterly interval.

APTA, the Southeast Pennsylvania Transit Authority (SEPTA), AAR, Canadian National Railways (CN), and CP Rail System expressed concern about these requirements as they relate to micro-processor based event recorders. Such recorders, and they appear to be the standard on Canadian locomotives, constantly self-test and, if a self-test fails, force a penalty brake application on the locomotive until it is taken out of the lead position. For these recorders, it is argued, a separate test in the shop conducting the periodic inspection is neither necessary nor productive. FRA agrees and is amending the requirements at § 229.25(e)(2) to count a self-testing micro-processor event recorder that has not indicated a failure as having ''passed'' the pre-maintenance inspection requirement.

Several interested parties have suggested that the results of the periodic inspections be simply noted on the cab card. While the *fact* that a recorder has been successfully inspected, tested, and maintained is noted on the cab card (FRA Form 6180–49A, Block 15, Item Code 5), the event recorder regulation also calls for a copy of the ''data verification results.'' With a magnetic tape machine, the ''results'' are, physically, the printout of the tape reading; similarly with a micro-processor, the ''results'' are also a readable representation of what the machine has recorded. FRA agrees with those who urge the electronic filing of the ''data verification results'' and notes that the rule does not limit the means by which the results ''shall be maintained.'' Electronic filing is permissible, but FRA requires that the electronic filing be reduced to writing upon demand.

Events To Be Recorded

The definition of an event recorder, at § 229.5(g), is of a device

That monitors and records data on train speed, direction of motion, time, distance, throttle position, brake applications and operations (including train brake, independent brake, and, if so equipped, dynamic brake applications and operations) and, where the locomotive is so equipped, cab signal aspect(s), over the most recent 48 hours of operation of the electrical system of the locomotive on which it is installed.

Derived data: A device that ''monitors and records data on'' various aspects of the operation of a train does not necessarily have to record data on each separate aspect of operations. ''Train speed,'' ''time,'' and ''distance,'' for instance, are mutually dependent and any one of these parameters can be derived from the other two. The event recorder rule does not prohibit derived data, and whether an event is recorded directly or derived is largely a matter left to the railroad, so long as the calculated or derived data offer the same accuracy, reliability and precision as data recorded directly.

Throttle position/brake applications: Several interested parties requested clarification about the requirement to record throttle position and brake application and operations. In their powered phase of operations, diesel-electric locomotive event recorders typically capture several stages of throttle position, ''idle'' and notches 1 and 2 as a group and notches 3–8 individually. The heavy electric commuter railroads have referred to a 5-position controller on multiple-unit (MU) cars; while this has fewer positions than that of a diesel-electric locomotive, an event recorder that captured each of these positions would comply with the rule. A device that monitored and recorded only one position of forward motion would not. In the braking phase of operations, current diesel-electric locomotive recorders monitor dynamic brake set up and brake pipe pressure reductions if different amounts, depending on the railroad and the event recorder. Independent brake applications are, typically, recorded as ''on/off'' with 15 psi as the dividing line. An MU locomotive event recorder that records degrees or steps of braking power, and that shows the on/off application of the independent brake, complies with the event recorder rule. FRA does not see a problem just because certain heavy electric commuter equipment has ''blended brakes,'' in which both air and dynamic braking occur automatically with the movement of a single lever.

Traction motor current/dynamic braking current: APTA and CN inquired about the recording of traction motor current and dynamic brake current. The rule does not require the recording of traction motor current in either the powered or the dynamic brake phase, although, on some commuter equipment, it is one way to provide the required data on brake operations and equivalent throttle position or motoring mode.

Direction of motion: Section 229.5(g) lists ''direction of motion'' as a required parameter. Unless the information can be derived from other data, it must be directly recorded. FRA notes that, in the typical freight locomotive, the position of the reverser handle is a recorded parameter.

The ''48-hour'' rule: Several parties asked FRA to reduce the interval for recording data. The regulation, at § 229.5(g), requires monitoring and recording data ''over the most recent 48 hours of operation of the electrical system of the locomotive.'' There is an exception, not relevant here, for recorders installed prior to the effective date of the rule. Several types of recorders capture data at set intervals or whenever the operations of the locomotive change. A road locomotive used in switching, for instance, has frequent changes in direction, speed, and brake system actuation. The concern of those pushing for a shorter interval is that operations like switching will overtax the memory capacity of a recorder. FRA chose the 48-hour rule to be on the safe side of ensuring capture of the initial terminal brake test.

Information from the initial terminal test proved important in the investigation of the May 12, 1989, accident at San Bernardino, California, as discussed in the preamble to the final rule. (58 FR 36606). Other than the initially granted grandfather rights, FRA is not aware of any reason with an equivalent level of safety to reduce the required recording duration.

Cab signals—Northeast Corridor 9-aspect system: Cab signals, for locomotives so equipped, will continue to be a required parameter, including the new 9-aspect system on the Northeast Corridor.

Cab signals-joint operations: Several railroads operate over joint territory and use each other''s cab signals. An earlier practice was to marshall locomotives so that a unit belonging to the home railroad was always in the lead or was swapped into the lead at the border between the railroads. This method of operating allowed the ''home'' locomotive to respond to the signals controlling its operation. Union Pacific Railroad (UP) and Chicago and Northwestern Railway Company (CNW) currently conduct joint operations over hundreds of miles of each other''s cab signal territory. Their power pool arrangements are such that a locomotive of either railroad may be in the lead and it would be detrimental to service to change lead locomotives at the property line. The problem is that the two carriers have incompatible cab signal systems, a condition they have mitigated by having dual cab signals in the pooled locomotives. Either railroad''s locomotives can read the signals of the other, but their event recorders are not equipped with the capacity to record other than the signals of the home road. The rationale for requiring cab signal recording was that it was a vital part of accident investigation and that, because the signal was already on board, it would not be overly difficult to record it. That rationale is still valid, and FRA does not contemplate amending this portion of the event recorder rule. UP and CNW are welcome to petition for a waiver, or for an extension of time to expand the recording capacity of their event recorders, but this notice makes no change in the requirement as published.

Cab signals—separate recorders: Delaware and Hudson Railway Company operates a small number of locomotives with cab signal equipment. That equipment has a built-in device that records, in real time, date, speed, cab signal aspects, distance, and the status of the automatic equipment test. Proprietary software is used to download this information into a portable computer. This equipment complies with the event recorder rule, provided that the two recordings can be synchronized with a common parameter.

Speed

APTA requested clarification on the ''over 30 miles per hour'' parameter for requiring recorders; does it, for instance, exclude trains that are restricted by a railroad's operating rules and/or policy to speeds of 30 miles per hour or less? FRA does not restrict the methods railroads use to set the speeds of the trains they operate. Whether a train is restricted to 30 miles per hour or less by the class of track on which it operates or by company policy is immaterial. Effective May 5, 1995, if a train is operated faster than 30 miles per hour, it must have an event recorder in the lead locomotive—slower than that, the requirement does not apply.

Accuracy

Several parties requested clarification on accuracy and data resolution. FRA believes that accuracy, together with refinements in sampling intervals, are issues for future activity. As the agency said in the preamble to the final rule (58 FR 36609),

> Some commenters raised issues about the recorder's sampling intervals and sampling accuracy. FRA certainly expects that event recorders will be as accurate as present standards for speed indicators and for air gauges, but the agency realizes that more developmental work needs to be done in this area. FRA has decided not to further delay the requirement to have event recorders on trains and will postpone for now standards that would require resolution of technological issues that are intertwined with the extended development of solid state recorders and with recommendations that event recorders be standardized as to size, location, and crash worthiness.

Event Recorder Maintenance

Remote inspection: Kansas City Southern (KCS), D&H, and Soo Line requested clarification of and relief from the blackbox maintenance rules. Some of their locomotives are maintained at facilities without the equipment to read and analyze the data tapes from the recorders, and they seek to perform the recorder pre-maintenance inspection at a location remote from the shop where the rest of the periodic inspection work is performed. The rule does not specify where periodic recorder maintenance must be done, but only that it be performed every periodic inspection. The operative principles are (1) locomotives shall not leave the periodic inspection point with an inoperative event recorder—unless the cab card is annotated to show the locomotive as ''unequipped,'' (2) testing of recorders must precede maintenance work on them, and (3) trains operated over 30 miles per hour must have an in-service event recorder in the lead locomotive. In order to provide necessary flexibility, FRA will consider an event recorder test done up to 5 calendar days prior to the periodic inspection as complying with the requirements of this rule. If a railroad finds that it cannot complete testing and maintenance on an event recorder prior to the completion of the periodic inspection, it has the option of taking the recorder out of service and noting that fact on the cab card, following procedures allowed in § 229.135(c). FRA had been requested to allow a 5-day ''grace'' period—before or after the periodic inspection— for event recorder testing and maintenance where data analysis and/or recorder repair took place other than at the facility performing the period inspection. The agency understands the practical problems associated with providing every point performing periodic inspections with the sophisticated electronic equipment necessary to test and maintain event recorders. At the same time, FRA must maintain the integrity of its periodic inspection requirements. Section 229.23(d) has not been amended by this rule. The person conducting an inspection signs the card and that person's supervisor certifies that the work was done. In the case of event recorders, as noted earlier, the fact that a recorder has been successfully inspected, tested, and maintained is noted on the cab card (FRA Form 6180–49A, Block 15, Item Code 5). This means that a locomotive can depart the periodic inspection in one of three ways: without an event recorder, with a working event recorder, or with an event recorder properly taken out of service.

Ninety percent effective: In the preamble to the final rule, FRA stated:

> FRA has no desire to create unnecessary maintenance burdens on the railroads on the one hand, but, on the other, it cannot condone event recorders which fail for lack of effective maintenance. Testimony and comments by representatives of the railroads and of the suppliers demonstrate agreement that a properly maintained recorder will operate from one quarterly inspection to the next without failure, virtually all of the time. The final rule recognizes what industry has said and, accordingly, requires event recorders to be maintained so well that 90 percent of them are still functioning as intended when they arrive at the quarterly inspection. If this level of performance cannot be met on a month-to-month basis, the final rule then requires maintenance

intervals and practices to be adjusted so that it can.

APTA asked if the ''90 percent functional'' requirement applied to all parameters recorded by a particular carrier's blackbox or only to those required by the rule. Because the rule defines event recorders in relation to particular, required parameters, and because pre-maintenance testing requires ''cycling all required parameters,'' the rule clearly aims only at maintaining the operability of the required parameters. A recorder with a non-functioning, but non-defining parameter may still be both an ''in-service'' recorder under § 229.5(I) and ''fully functional'' under § 229.25.

Post-periodic inspection departure testing: The event recorder rule, at § 229.25(e)(3), states:

(3) If this test does not reveal that the device is recording all the specified data and that all recordings are within the designed recording parameters, this fact shall be noted on the data verification result required to be maintained by this section and maintenance and testing shall be performed as necessary until a subsequent test is successful.

The blackboxes used by the Canadian railroads are interchangeable, and if one is discovered with a fault, it is swapped out for a known good one and the defective unit is returned to the factory for repair. (Part of the installation procedure includes entry into the computer of the identification of the locomotive on which the unit is located.) Section 229.25(e)(3) could be read as requiring successful repair of the unit *currently installed on the locomotive* before that locomotive departs the 92-day inspection. Such an interpretation strains against industry practices and injects an unnecessary layer of regulation into the system. FRA supports the change-out of bad units for good as part of the post-periodic departure check-out.

Removal from service—calendar day inspection: One of the commuter railroads asked if a locomotive found at the Monday morning inspection with the recorder ''fault light'' on can be used as a lead locomotive until Tuesday morning. Assuming the railroad complies with the requirements for taking a recorder out of service, § 229.135(b) allows the use of the locomotive as a lead unit until the next calendar day inspection.

New and Rebuilt Locomotives

AAR and The American Short Line Railroad Association (ASLRA) seek to have the event recorder requirements apply to new and rebuilt locomotives only. This is in accord with industry practices, and according to data presented by the railroads during the rulemaking process, 62 percent of Class I road locomotives are currently equipped with a qualifying event recorder. Based on industry information and testimony presented before the final rule was issued, 90 percent or more of the road trains are equipped with a recorder. While it is not always clear exactly what types of trains are being counted in these figures, it is clear that not all locomotives need to be equipped to achieve full compliance with a rule requiring event recorders on the lead locomotive of all trains operated faster than 30 miles per hour.

FRA considered the new/rebuilt option and concluded, in concert with safety, policy, and legal offices at the agency and Departmental level, that a rule requiring event recorders on new and rebuilt locomotives only does not reflect the best interpretation of the mandate in RSIA to equip trains where doing so will enhance safety. FRA believes that the option it chose, requiring event recorders on the lead locomotive of trains operated faster than 30 miles per hour, does satisfy the best interpretation of a statutory mandate to ''issue such rules, regulations, standards, and orders as may be necessary to enhance safety by requiring that trains be equipped with event recorders * * *.'' (RSIA, section 21) The safety enhancements of recorders were fully discussed in the preamble to the final rule and need not be repeated here. In addition, FRA became aware, during the development of this rule, that several railroads believe the number of recorder equipped locomotives in their fleets will enable them to comply with a requirement for an event recorder in the lead locomotive of every train operated faster than 30 miles per hour. For these railroads, a requirement to equip each new or rebuilt locomotive with an event recorder would be an unjustified burden.

Another party to this proceeding, NTSB, urged that *all* locomotives in a train should be equipped (the ultimate result of equipping new and rebuilt locomotives) in order to permit accident investigators to determine the performance of each locomotive in the consist. In addition to the obvious cost implications of this suggestion, there are sound reasons for not attempting to mandate equipping all locomotives at this time. FRA knows that event recorder technology is likely to advance rapidly. Accordingly, rather than establish a rule that would eventually require an event recorder meeting today's standard on every locomotive (except those traveling so slowly they do not even need speed indicators), FRA believes that it is wise to wait to see whether the recorders themselves become significantly better than they now are. FRA believes that, as recorder technology advances, standards will be set for sampling intervals, the ranges of recorded parameters, the accuracy of recording, accident survivability, and data extraction protocols. As good as these ideas are, FRA cannot bring them into being simply by mandating them; FRA's option of equipping fast trains rather that all new and rebuilt locomotives will allow time to bring these concepts to mature and practical fruition.

In analyzing costs, FRA used the best data it had. As noted in its ''Final Rule Regulatory Impact Analysis,''

Under normal railroad operations, where many trains are powered by multiple power units, 100% coverage is possible with significantly less than 100% of the units being equipped with a recorder.

There is a point, however, at which the efforts to manage, reassign, and shift power to assure full coverage may cost more that the installation of additional recorders. Unfortunately, FRA does not have the type of individualized, proprietary information necessary to analyze these trade-offs and arrive at the perfect cost-minimalization strategy. We have therefore employed what we believe to be a conservative approach in a deliberate effort not to understate costs.

''Event Recorders Final Rule Regulatory Impact Analysis,'' February 12, 1993, p. 9.

Finally, as FRA discussed in the preamble to the final rule (58 FR 36607), the primary safety benefit of event recorders lies in their use as a tool to diagnose train handling accidents, to continue building a knowledge base of accident causation, and, through sampling actual train movements, to evaluate changes in methods of train operation. Event recorders also provide a way to sample the train-handling ability of an engineer in a real-world environment. FRA has determined that event recorders enhance railroad safety. Whether they are used to aid accident analysis, to monitor locomotive engineers' performance, or to monitor equipment performance, event recorders provide data that are free from bias, free from the inconsistent powers of human observation, and free from the possible taint of self-interest. The data extracted from recorders can be played over and over as part of the analysis process without losing their consistency. Event recorders provide FRA with a growing pool of verifiable factual information about how trains are operated and what happens when they become part of an accident. Even the presence of event recorder data will not ensure the

discovery of the cause of every accident nor eliminate all sources of controversy about causation, but as shown in the Southern Pacific's San Bernardino derailment, event recorder data can help direct the attention of an accident investigator to possible causes not at first suspected. In addition, by reducing the potential for bias from accident investigations, the data from event recorders can help pinpoint operational changes that may prevent the next accident.

FRA does not find merit in the argument that event recorders should only be required on new and rebuilt locomotives and rejects the requests filed by AAR and ASLRA to so amend the final rule.

Recording While Stationary

FRA's event recorder rule states, at § 229.5(g),

''Event recorder'' means a device, designed to resist tampering, that monitors and records data on train speed, direction of motion, time, distance, throttle position, brake applications and operations (including train brake, independent brake, and, if so equipped, dynamic brake applications and operations) and, where the locomotive is so equipped, cab signal aspect(s), over the most recent 48 hours of operation of the electrical system of the locomotive on which it is installed. A device, designed to resist tampering, that monitors and records the specified data only when the locomotive is in motion shall be deemed to meet this definition provided the device was installed prior to November 5, 1993, and records the specified data for the last eight hours the locomotive was in motion.

CN is concerned about the ''installed prior to * * *'' language, because its present recorders record only while the locomotive is in motion but, because its recorders are interchangeable, a particular unit may be ''installed'' and ''uninstalled'' as necessary to keep an operating recorder on the locomotive in the lead. The purpose of the cut-off date was to prevent additional purchases of ''motion only'' recorders and to give railroads owning such recorders time to phase out these units in the normal course of business. FRA is aware that CN has embarked on a program to upgrade their recorders when factory maintenance is performed. Unless a pattern of abuse comes to FRA's attention, FRA sees no need to change its flexible approach: ''motion only'' event recorders in a carrier's service, whether in inventory or installed on a locomotive, as of November 5, 1993, are deemed to comply.

Extensions of Time

APTA said that ''it would be helpful for * * * FRA to elaborate on some of the general criteria it expects to use and the minimum supporting documentation it expects to receive in considering * * *'' requests for an extension of time to comply with the event recorder rule. Unfortunately, there is no cookbook recipe for a petition for waiver of a safety rule, other than as published in 49 CFR Part 211. Railroads seeking waivers are advised to state their real needs as clearly as possible and to carefully follow the procedures in §§ 211.7 and 211.9.

Regulatory Impact

This rule has been evaluated under Executive Order 12688 and the DOT policies and procedures. Although the original rule met the criteria for being a significant rule under those policies and procedures, these amendments are not considered significant since they either delete requirements concerning procedural matters or allow for greater flexibility in complying with the rule.

The economic impact of this change will be to reduce the cost of compliance with FRA regulations. That cost reduction will be of a minimal nature and does not alter FRA's original analysis of the costs and benefits associated with the basic rule. FRA certifies that this amendment will not have a significant impact on small entities. Similarly, this amendment will not alter the information collection requirements of this regulation; will have no identifiable environmental impact; and will have no effect on the states or the distribution of power and responsibilities among various levels of government.

As provided for in 5 U.S.C. 553(d), FRA finds that there is good cause for making this rule effective in less that 30 days from publication. Efforts to comply with certain requirements being deleted by this rule might generate an undue burden on the Safety Board and the railroad industry. Prompt amendment of the provision dealing with post-accident data security will avoid unwarranted confusion within the regulated community concerning their legal obligation in the event of an accident. The other amendments made by this notice recognize the enforcement policy of the agency.

List of Subjects in 49 CFR Part 229

Penalties, Railroad safety, Reporting and recordkeeping requirements.

The Rule

Therefore, in consideration of the foregoing, FRA amends Part 229, Chapter II, Subtitle B of Title 49, Code of Federal Regulations as follows:

PART 229—RAILROAD LOCOMOTIVE SAFETY STANDARDS

1. The authority citation for part 229 is revised to read as follows:

Authority: 49 U.S.C. Chapters 201, 207, and 213; 49 U.S.C. 103; Pub. L. 100–342; Pub. L. 102–365; Pub. L. 102–533; Pub. L. 103–272; 49 CFR 1.49 (c), (g), and (m).

2. By revising § 229.5(i) to read as follows:

§ 229.5 Definitions.

(i) *In-service event recorder* means an event recorder that was successfully tested as prescribed in § 229.25(e) and whose subsequent failure to operate as intended, if any, is not actually known by the railroad operating the locomotive on which it is installed.

* * * * *

3. By revising § 229.25(e)(2) to read as follows:

§ 229.25 Tests: every periodic inspection.

* * * * *

(e) * * *

(2) The event recorder shall be tested prior to performing any maintenance work on it. At a minimum, the event recorder test shall include cycling all required recording parameters and determining the full range of each parameter by reading out recorded data. A micro-processor based event recorder, equipped to perform self-tests, has passed the pre-maintenance inspection requirement if it has not indicated a failure.

* * * * *

4. By revising § 229.135 (a) through (d) to read as follows:

§ 229.135 Event Recorders.

(a) *Duty to equip*. Effective May 5, 1995, and except as provided in paragraph (b) of this section, any train operated faster than 30 miles per hour shall have an in-service event recorder in the lead locomotive. The presence of the event recorder shall be noted on Form FRA F6180–49A, under the REMARKS section, except that an event recorder designed to allow the locomotive to assume the lead position only if the recorder is properly functioning is not required to have its presence noted on Form FRA F6180–49A. For the purpose of this section, ''train'' includes a locomotive or group of locomotives with or without cars, and ''lead locomotive'' means the locomotive from whose cab the crew is operating the train and, when cab control locomotives and/or MU locomotives are coupled together, is the first locomotive proceeding in the direction of movement. The duty to equip the lead locomotive may be met

with an event recorder located elsewhere than the lead locomotive provided that such event recorder monitors and records the required data as though it were located in the lead locomotive.

(b) *Response to defective equipment.* A locomotive on which the event recorder has been taken out of service as provided in paragraph (c) of this section may remain as the lead locomotive only until the next calendar-day inspection. A locomotive with an inoperative event recorder is not deemed to be in improper condition, unsafe to operate, or a non-complying locomotive under §§ 229.7 and 229.9, and notwithstanding any other requirements in this chapter, inspection, maintenance, and testing of event recorders is limited to the requirements set forth in § 229.25(e).

(c) *Removal from service.* A railroad may remove an event recorder from service and, if a railroad knows that an event recorder is not monitoring or recording the data specified in § 229.5(g), shall remove the event recorder from service. When a railroad removes an event recorder from service, a qualified person shall cause to be recorded the date the device was removed from service on Form FRA F6180–49A, under the REMARKS section. An event recorder designed to allow the locomotive to assume the lead position only if the recorder is properly functioning is not required to have its removal from service noted on Form FRA F6180–49A.

(d) *Preserving accident data.* For the purposes of this section, the term ''event recorder'' includes all locomotive-mounted recording devices designed to record information concerning the functioning of a locomotive or train regardless of whether the device meets the definition of ''event recorder'' in § 229.5.

(1) *Accidents required to be reported to the Federal Railroad Administration.* If any locomotive equipped with an event recorder is involved in an accident that is required to be reported to FRA, the railroad using the locomotive shall, to the extent possible, and to the extent consistent with the safety of life and property, preserve the data recorded by the device for analysis by FRA. This preservation requirement permits the railroad to extract and analyze such data; *provided* the original or a first-order accurate copy of the data shall be retained in secure custody and shall not be utilized for analysis or any other purpose except by direction of FRA or the National Transportation Safety Board. This preservation requirement shall expire 30 days after the date of the accident unless FRA or the Board notifies the railroad in writing that the data are desired for analysis.

(2) *Relationship to other laws.* Nothing in this section is intended to alter the legal authority of law enforcement officials investigating potential violation[s] of State criminal law[s] and nothing in this chapter is intended to alter in any way the priority of National Transportation Safety Board investigations under 49 U.S.C. 1131 and 1134, nor the authority of the Secretary of Transportation to investigate railroad accidents under 49 U.S.C. 5121, 5122, 20107, 20111, 20112, 20505, 20702, 20703, and 20902.

* * * * *

Issued in Washington, D.C., on May 19, 1995.

Jolene M. Molitoris,

Administrator.

[FR Doc. 95–12963 Filed 5–25–95; 8:45 am]

BILLING CODE 4910–06–P

DEPARTMENT OF COMMERCE

National Oceanic and Atmospheric Administration

50 CFR Part 625

[Docket No. 950206038–5038–01; I.D. 051595E]

Summer Flounder Fishery; Adjustments to 1995 State Quotas

AGENCY: National Marine Fisheries Service (NMFS), National Oceanic and Atmospheric Administration (NOAA), Commerce.

ACTION: Notification of commercial quota adjustment.

SUMMARY: NMFS announces adjustments to the commercial quota for the 1995 summer flounder fishery. This action complies with regulations implementing the Fishery Management Plan for the Summer Flounder Fishery (FMP), which require that annual quota overages landed in any state be deducted from that state's quota for the following year. The public is advised that a quota adjustment has been made and is informed of the revised state quotas. The Director, Northeast Region, NMFS (Regional Director), has also determined that there is no Federal summer flounder quota available for those coastal states that did not receive a portion of the annual commercial summer flounder quota. Vessels issued a Federal moratorium permit for the summer flounder fishery may not land summer flounder in these states.

EFFECTIVE DATE: May 22, 1995.

FOR FURTHER INFORMATION CONTACT: Hannah Goodale, 508–281–9101.

SUPPLEMENTARY INFORMATION: Regulations implementing Amendment 2 to the FMP are found at 50 CFR part 625 (57 FR 57358, December 4, 1992). The regulations require annual specification of a commercial quota that is apportioned among the Atlantic coastal states from North Carolina through Maine. The process to set the annual commercial quota and the percent allocated to each state is described in § 625.20. The commercial summer flounder quota for the 1995 calendar year, adopted to ensure achievement of the appropriate fishing mortality rate of 0.53 for 1995, is set to equal 14,690,407 lb (6.7 million kg) (60 FR 8958, February 16, 1995).

Section 625.20(d)(2) provides that all landings for sale in a state shall be applied against that state's annual commercial quota. Any landings in excess of the state's quota will be deducted from that state's annual quota for the following year. Based on dealer reports and other available information, NMFS has determined that the States of Massachusetts and Rhode Island have exceeded their 1994 quota by 17,707 lb (8.8 kg) and 60,670 lb (27.4 kg), respectively. The remaining States of Maine, New Hampshire, Connecticut, New Jersey, New York, Delaware, Maryland, and North Carolina did not exceed their 1994 quotas. A complete summary of quota adjustments for 1995 is in Table 1.

The Commonwealth of Virginia collects landings data from the summer flounder fishery conducted in its waters, and the landings for the fourth quarter of 1994 have not yet been compiled. If those final figures result in landings in excess of the 1994 quota, a further adjustment will be required and a notification will be published in the **Federal Register**.

TABLE 1—ADJUSTED 1995 COMMERCIAL QUOTA FOR THE SUMMER FLOUNDER FISHERY

	1994 quota (lb)	1994 landings (lb)	1994 overage (lb)	Initial 1995 quota (lb)	Adjusted 1995 quota	
					(lb)	(kg)
ME	7,463	4,857	.....	6,987	6,987	3,169
NH	74	.....	.....	67	67	30
MA	1,031,194	1,048,901	17,707	1,001,953	984,246	
					6,446	
RI	2,510,149	2,570,819	60,670	2,303,894	2,243,224	1,017,526
CT	384,247	370,413	.....	331,574	331,574	150,399
NY	1,423,943	1,270,012	.....	1,123,374	1,123,374	509,554
NJ	2,510,745	2,413,761	.....	2,456,969	2,456,969	1,114,462
DE	4,681	3,635	.....	2,614	2,614	1,186
MD	273,117	160,380	.....	299,551	299,551	135,874
VA	3,240,192	3,100,801	.....	3,131,519	3,131,519	1,420,433
NC	4,216,993	3,571,188	.....	4,031,905	4,031,905	1,828,841

This notification also announces the Regional Director's determination that no quota is available for those coastal states that did not receive a distribution from the annual commercial summer flounder quota. The Regional Director's determination triggers the summer flounder moratorium permit condition that owners of federally permitted vessel agree not to land summer flounder in any state that did not receive any part of the annual commercial summer flounder quota. The purpose of this condition is to aid in maintaining the integrity of the overall quota, which is set to achieve a specific mortality reduction goal, as state quotas are filled.

Historically, measurable landings of summer flounder have occurred only in those coastal states from North Carolina northward to Maine. These are the states that have received distributions from the annual commercial summer flounder quota. Recent reports, however, indicate that harvesters intend to land summer flounder in other states, such as South Carolina, in response to the closures of Virginia and North Carolina to landings of summer flounder. States other than those specified in Table 1 do not have any available summer flounder quota because they did not receive a share of the annual commercial quota. Therefore, vessels with a Federal summer flounder moratorium permit may not land summer flounder in these states.

This notification serves to trigger the permit condition that prevents vessels that are issued a Federal summer flounder moratorium permit from landing summer flounder in any state that has no commercial summer flounder quota.

Classification

This action is required by 50 CFR part 625 and is exempt from review under E.O. 12866.

Authority: 16 U.S.C. 1801 *et seq.*

Dated: May 22, 1995.

Richard H. Schaefer,

Director, Office of Fisheries Conservation and Management, National Marine Fisheries Service.

[FR Doc. 95–12935 Filed 5–22–95; 4:58 pm]

BILLING CODE 3510–22–W

Proposed Rules

Federal Register
Vol. 60, No. 102
Friday, May 26, 1995

This section of the FEDERAL REGISTER contains notices to the public of the proposed issuance of rules and regulations. The purpose of these notices is to give interested persons an opportunity to participate in the rule making prior to the adoption of the final rules.

FEDERAL RETIREMENT THRIFT INVESTMENT BOARD

5 CFR Part 1601

Participant Choices of Investment Funds

AGENCY: Federal Retirement Thrift Investment Board.

ACTION: Proposed rule.

SUMMARY: The Executive Director of the Federal Retirement Thrift Investment Board (Board) is publishing proposed amendments to interim regulations on participants' choices of Thrift Savings Plan (TSP) investment funds. The proposed amendments, to subparts A and C of 5 CFR Part 1601, reflect changes in the methods by which TSP participants may request interfund transfers, including use of an automated voice response system to make, change, or cancel interfund transfer requests. The proposed amendments also remove the investment and interfund transfer restrictions on accounts of participants who withdraw their accounts in one or more equal payments. Finally, the proposed amendments increase the number of interfund transfers permitted per year from four (4) to twelve (12). No amendments are proposed to subpart B.

DATES: Comments must be received on or before June 26, 1995.

ADDRESSES: Comments may be sent to: David L. Hutner, (202) 942–1661.

SUPPLEMENTARY INFORMATION: Interim rules governing participants' choices of investment funds were originally published in the **Federal Register** on March 29, 1990, as an amendment to title 5 of the Code of Federal Regulations, adding Part 1601, Participants' Choice of Investment Funds. Revised interim rules were published in the **Federal Register** on January 7, 1991, primarily to implement section 3 of the Thrift Savings Plan Technical Amendments Act of 1990 (TSPTAA), which removed investment restrictions that had been in place prior to the effective date of the TSPTAA. On December 28, 1994, the Board published a proposed rule in the **Federal Register** (59 FR 66796) setting forth changes in the procedures by which TSP participants may make, change, or cancel interfund transfer requests. The Board did not receive any comments on the proposed regulations. However, the December 28, 1994, proposed amendments to the interim rules are being withdrawn and replaced by these proposed amendments.

The present proposed rules, when adopted, will amend the interim rules by making changes to the procedures by which TSP participants may make, change, or cancel interfund transfer requests. The primary change in the procedures involves the availability of the automated voice response system, known as the ''ThriftLine,'' for participants to make interfund transfer requests over the telephone. The ThriftLine provides services to participants in addition to enabling them to make interfund transfer requests, but those other functions are not addressed in these regulations. These proposed regulations also address two policy changes which have been adopted by the Board since the publication of the previous proposed amendments. The present proposed rules will amend the interim rules by removing the investment and interfund transfer restrictions on accounts of participants who withdraw their accounts in one or more equal payments. Such participants were previously required to invest their entire accounts in the G Fund. Finally, the proposed amendments will amend the interim rules by increasing the number of interfund transfers permitted per year from four (4) to twelve (12).

Section-by-Section Analysis

Subpart A

The proposed rule amends § 1601.1, which contains the definitions applicable to Part 1601, by revising one definition and adding three new ones.

The definition of ''Interfund transfer request'' has been amended to reflect that properly completing and submitting to the TSP recordkeeper an Interfund Transfer Request (Form TSP–30) is no longer the exclusive method to request an interfund transfer. A request may also be made by proper entry of the transaction on the automated ThriftLine.

Definitions of ''Board'' (the Federal Retirement Thrift Investment Board), ''Acknowledgment of Risk,'' and ''ThriftLine'' have been added. Under 5 U.S.C. 8439(d), all participants who invest in the Common Stock Index Investment Fund (C Fund) or the Fixed Income Investment Fund (F Fund) must sign an acknowledgment that the investment is made at the participant's own risk and that the participant is not protected against losses on the investment or guaranteed a return on the investment. Under § 1601.5 (as amended by the proposed rule), the procedures for satisfying the requirements of 5 U.S.C. 8439(d) have been changed.

Instructions for use of the ThriftLine to make interfund transfer requests on the telephone will be widely available to all TSP participants.

Subpart B

Subpart B is unchanged by the proposed amendment.

Subpart C

The proposed amendments will remove § 1601.4(c) which requires that the account balance of a participant who withdraws his or her account balance in one or more equal payments be invested entirely in the G Fund. This change will allow a participant who receives equal payments to invest the remaining account balance in any of the TSP investment funds in which to invest the portion of the account that is remaining and to make interfund transfers under the same rules applicable to other TSP participants. The remainder of § 1601.4 is unchanged by the proposed amendment.

Proposed § 1601.5 sets forth the methods by which interfund transfer requests can be made. Section 1601.5(a) contains the general rules that interfund transfer requests may now be made either by submission of a properly completed Form TSP–30 or by entry of the transaction on the ThriftLine. Section 1601.5(a) also states explicitly that Forms TSP–30 generated prior to October 1990 cannot be used to make interfund transfer requests. Such forms can be readily identified because they were preprinted with participants' names and addresses, described restrictions on the amounts that could be invested in the C Fund and F Fund, and specified a particular effective date for the interfund transfer. Similarly, Form TSP–30–S, which was designed for use only by certain FERS

participants to make interfund transfers effective as of the end of December 1990, cannot be used to make interfund transfer requests.

Section 1601.5(b) retains the rule that interfund transfer requests must include designations of percentages to be invested in each of the TSP investment funds in multiples of 5 percent that total 100 percent. This requirement applies regardless of whether the interfund transfer request is entered on the ThriftLine or is submitted on Form TSP–30. Section 1601.5 also retains from the previous rule the admonition that an interfund transfer request does not affect future contributions made by a participant. If a participant wishes to change the allocation of future contributions among the investment funds, that can only be accomplished by submission to his or her employing agency of a properly completed Election Form (TSP–1) during a TSP Open Season. The rules for submission of Election Forms are set forth in Subpart B, which is unchanged by the amendments.

Section 1601.5(c) retains the previous rule that percentages elected by the participant are applied to the account balance as of the effective date of the interfund transfer, which is established as provided in § 1601.6. The percentages are applied to the account in the same manner, whether submitted on Form TSP–30 or entered on the ThriftLine.

Section 1601.5(d) contains significant changes to the procedures governing the acknowledgment of risk required by 5 U.S.C. 8439(d). Under the previous rule, all participants requesting an interfund transfer were required to sign the acknowledgment of risk section on Form TSP–30 each time the form was submitted, unless the request was for investment of 100% of the account balance in the Government Securities Investment Fund (G Fund). The proposed rule is premised on a determination that each participant should only be required to acknowledge investment risk once. To date, participants who have invested any portion of their accounts in the C Fund or the F Fund at any time must have already signed an acknowledgment of risk, either on Form TSP–1 or on Form TSP–30, since those are the only two methods by which money could have been invested in the C Fund or F Fund. Accordingly, all participants whose account records indicate that they have invested in the C Fund or F Fund (regardless of whether they currently have money in those funds) are deemed to have satisfied the requirements of 5 U.S.C. 8439(d), and are permitted to use the ThriftLine to request interfund transfers without further acknowledgment of investment risk. Participants who have never invested in the C Fund or F Fund, and therefore have never been required to sign an acknowledgment of risk, will not be permitted to make interfund transfers on the ThriftLine until the TSP recordkeeper receives a signed acknowledgment of risk form from them. An Acknowledgment or Risk For ThriftLine Interfund Transfers (Form TSP–32) has been created for this purpose. The proposed rule treats participants who may continue to make their interfund transfer requests on paper, using Form TSP–30, consistently with those who use the ThirftLine. Since it is only necessary to acknowledge investment risk once, participants who use Form TSP–30 and fail to sign the acknowledgment of risk section will no longer have their forms rejected if they have previously invested any portion of their TSP account in the C Fund or F Fund, or if the TSP recordkeeper has received a properly completed Form TSP–32. Form TSP–30 has been amended to delete the statement that all forms requesting investment in the C Fund or F Fund will be rejected if the acknowledgment of risk section of the form is not signed. The proposed rule retains the requirement that the form itself (as opposed to the acknowledgment of risk section) must be signed and dated in all cases.

It is anticipated that some participants may continue to sign the acknowledgment of risk section even though they have already invested in the C Fund and/or F Fund and therefore do not need to sign again. This is not an area of concern to the Board, however, because the superfluous signature does not impose a significant burden on participants. Any participant who submits Form TSP–30 requesting investment in the C Fund or F Fund and is uncertain as to whether he or she has ever invested in those funds should sign the acknowledgment of risk section of the form to eliminate the possibility that the form will be rejected for lack of an acknowledgment of risk. For purposes of determining whether participants' interfund transfer requests should be processed, the TSP recordkeeping system will identify whether a participant has ever invested in the C Fund or F Fund, even if the participant subsequently transferred his or her entire account to the G Fund.

Section 1601.5(e) of the proposed rule, which addresses only use of Form TSP–30, remains virtually unchanged in substance from the previous rule, except that paragraph (2) has been amended to reflect the rules set forth in § 1601.5(d). The other changes to this section are designed to consolidate the language for ease of reading rather than to make substantive changes to the procedures for processing interfund transfer requests. In particular, the language ''or otherwise is not properly completed in accordance with the instructions on the form'' in proposed § 1601.5(e)(1) is a substitute for several of the specific bases for rejection of forms that were included in the previous rule. Since the instructions on Form TSP–30 include requirements that had been reflected in separate paragraphs of the previous rule, those paragraphs have been eliminated to avoid redundancy.

Section 1601.5(f) has not been changed in substance.

Section 1601.6 of the proposed rule governs the timing and effective dates of interfund transfers. The proposed rule sets forth the order of precedence with respect to multiple transfer requests and cancellations using the ThriftLine and/or Form TSP–30. Although the proposed rule permits interaction between entry of transactions on the ThriftLine and on paper (i.e., by Form TSP–30 or written cancellations), the Board notes that the rules governing that interaction are, in some cases, complex; therefore, participants are encouraged to avoid, if possible, mixing the two methods. The ThriftLine provides the most expeditious and certain method of entering all transactions, because it eliminates any delays caused by mail delivery and processing of documents.

Section 1601.6(a) of the proposal allows participants to make up to twelve interfund transfers per calendar year rather than the four interfund transfers per calendar year that were previously allowed.

Section 1601.6(b) contains the general rule governing the date on which an interfund transfer will be made effective, based on the date of receipt of the interfund transfer request. In the case of a request made on the ThriftLine, the date of receipt is the date the transaction is entered on the ThriftLine. In the case of a request made by Form TSP–30, the date of receipt is the date the form is delivered to the TSP recordkeeper. Apart from the fact that interfund transfer requests may now be received by two methods, the general rule adopted by this rule is identical to the previous rule: requests received on or before the 15th of a month (or next business day if the 15th is not a business day) are effective as of the end of the month of receipt; requests received after the 15th of a month are effective as of the end of the month following receipt.

Section 1601.6(c) sets forth the rules governing receipt of more than one interfund transfer request during the same one-month period after the 15th of one month (or next business day) and on or before the 15th of the next month. The basic rule, set forth in § 1601.6(c)(1), is that the request with the latest date of signature (if Form TSP–30 is used) or entry (if the ThriftLine is used) controls. Thus, if a properly completed Form TSP–30 was dated June 17 and received by NFC on June 25, and another interfund transfer request was entered on the ThriftLine on June 23, the ThriftLine transaction would supersede the request on Form TSP–30, because the June 23 ThriftLine transaction was later than the June 17 signature on the Form TSP–30.

The rules are based on the presumption that, when a participant enters a new transfer on the ThriftLine, he or she intends to supersede a form that was mailed on an earlier date. The rules also presume that a participant intends a later ThriftLine entry to supersede an earlier one. Similarly, where a Form TSP–30 is dated one day and another Form TSP–30 is dated on a subsequent day, it is presumed that the participant intends to override the earlier dated form, regardless of the order in which the forms may be received by the TSP recordkeeper, because that order can be affected by the uncertainties of mail delivery.

Therefore, under the proposed rules, the date of receipt of Form TSP–30 determines only the effective date for the interfund transfer that is requested. A Form TSP–30 dated June 8 and received by the TSP recordkeeper on June 12 cannot be superseded by a subsequent form dated June 13 but not received by the recordkeeper until June 17. The former will be processed as of the end of June; the latter as of the end of July. If participants using Form TSP–30 wish to control the month end for which a transfer is to be made effective, it is their responsibility to ensure that the form is actually delivered to NFC during the proper one-month period. This can be accomplished in most cases by allowing sufficient time to accommodate potential mail delays or by using overnight mail (or other guaranteed forms of delivery). Participants can also control the effective date of their interfund transfers by using the ThriftLine rather than Form TSP–30, because the ThriftLine provides immediate acceptance of properly entered interfund transfer requests.

Section 1601.6(c)(2) of the proposal provides more detailed rules governing receipt of multiple interfund transfer requests having the same date. Section 1601.6(c)(2)(i) provides that, as between a ThriftLine request and a Form TSP–30 dated the same day, the ThriftLine entry will be made effective. Thus, the ThriftLine entry will supersede a Form TSP–30 dated the same day.

Section 1601.6(c)(2)(ii) provides that as between two transactions entered the same day on the ThriftLine, the one entered later in the day supersedes the earlier request.

Finally § 1601.6(c)(2)(iii) provides that if more than one Form TSP–30 has the same date signed, then all shall be rejected, unless they contain an identical percentage allocation among the investment funds, in which case that allocation will be accepted. Unlike interfund transfer requests entered on the ThriftLine, where Forms TSP–30 bear the same date but different allocation elections, the Board has no way to determine which form represents the participant's latest request. What is most important to participants is that there be uniform rules that can be consistently applied in cases involving multiple interfund transfer requests. The proposed rule accomplishes that purpose.

Section 1601.6(c)(3) sets forth the rules for determining the date of an interfund transfer request. Under § 1601.6(c)(3)(i), if made on the ThriftLine, the date of the interfund transfer request is the date of the telephone entry of the transaction. Under § 1601.6(c)(3)(ii), if the interfund transfer request is made on Form TSP–30, the date of the request is the signature date entered on the form by the participant. As previously discussed, the date of receipt of the form is not the date of the request; the receipt date controls only the effective date for which the form is deemed to be a request. Finally, under § 1601.6(c)(3)(iii), the date on which a transaction is entered on the ThriftLine is determined by application of Central Time. For example, a transaction entered at 12:15 a.m. Eastern Time on the 16th of a month will be considered a transaction entered on the 15th, because it was 11:15 p.m. Central Time when the transaction occurred. Conversely, a transaction entered at 11:15 p.m. Pacific Time on the 15th, is entered at 1:15 a.m. Central Time and will therefore be considered a transaction entered on the 16th. The determination of the date on which a ThriftLine transaction was requested may be important for two purposes: (1) to determine whether the request was made by the applicable l5th of the month cutoff date, and (2) to determine whether the request supersedes or cancels another request.

Section 1601.6(d) of the proposed rule governs cancellation of interfund transfer requests. Under § 1601.6(d)(1), a signed and dated cancellation letter containing the required information must be received by the same cutoff date (15th of the month or next business day if the 15th is not a business day) that applies to receipt of an interfund transfer request that is to be effective as of the end of the month for which the transfer to be canceled is pending. For example, a letter to cancel a pending interfund transfer that is to be made effective as of the end of June must be received by June 15 (nor next business day). A cancellation letter will not cancel a transfer request with a date after the date of the cancellation letter. If a cancellation letter does not state unambiguously the specific interfund transfer request to be canceled, it will cancel any earlier dated interfund transfer request that is pending for the applicable effective date. If the letter does state unambiguously the interfund transfer request to be canceled, then only that request will be canceled by the letter.

The TSP recordkeeper will compare multiple interfund transfer requests to determine which is the controlling request prior to determining the effect of a written cancellation. For example, assume there are two interfund transfer requests received prior to June 15, one dated June 3 and one dated June 5. The June 5 request supersedes the June 3 request. If there is a cancellation letter dated June 10 (and received by June 15) specifying cancellation of the June 5 request, then no interfund transfer would be processed, because the June 3 request would be superseded and the June 5 request would be canceled. On the other hand, if the June 10 letter specified cancellation of the June 3 request, then the June 5 request would be processed, because it would not be superseded by the earlier June 3 request nor would it be canceled by the June 10 cancellation letter that specified cancellation of the June 3 request.

The last sentence of § 1601.6(d)(1) governs the rare situation where the written cancellation bears the same date as an interfund transfer request. A different rule applies depending upon whether the interfund transfer request was submitted on Form TSP–30 or entered on the ThriftLine. In the former case, it is presumed that the cancellation letter was intended to cancel a Form TSP–30 dated the same day. In the latter case, with one exception, the ThriftLine entry is presumed to supersede the cancellation

letter, which may have been an attempt to cancel another Form TSP–30 that was received for a prior effective date or that has not yet been received or entered into the TSP system. The only exception is where the written cancellation specifically states that it is intended to cancel the ThriftLine entry of the same date; in that situation, the cancellation letter will be effective to cancel the ThriftLine request of the same date.

Under § 1601.6(d)(2), cancellation entered on the ThriftLine before the relevant 15th of the month cutoff date will cancel a pending interfund transfer request that had been entered previously on the ThriftLine. An interfund transfer request made using Form TSP–30 can be canceled using the ThriftLine only if it has been entered into the TSP recordkeeping system and is, therefore, at the time the cancellation is entered on the ThriftLine, a pending transfer. In that regard, participants are cautioned that in many cases Forms TSP–30 are not entered into the TSP recordkeeping system until after the 15th cutoff, even if they are received before that cutoff. If that is the case, then the participant cannot use the ThriftLine to cancel an interfund transfer request that was submitted on Form TSP–30. For that reason, participants who prefer to make interfund transfer requests by use of Form TSP–30 are encouraged to cancel only in writing. The Board will not be responsible for a participant's inability to cancel a Form TSP–30 by use of the ThriftLine. Participants are encouraged to use, in any one interfund transfer period, only one method to make, change, or cancel interfund transfer requests.

Section 1601.7 is unchanged by the proposed amendment.

Regulatory Flexibility Act

I certify that these regulations will not have a significant economic impact on a substantial number of small entities.

Paperwork Reduction Act

I certify that these regulations do not require additional reporting under the criteria of the Paperwork Reduction Act of 1980.

List of Subjects in 5 CFR Part 1601

Employee benefit plans, Government employees, Retirement, Pensions.

Dated: May 11, 1995.

John J. O'Meara,

Executive Director (Acting), Federal Retirement Thrift Investment Board.

For the reasons set out in the preamble, Part 1601 of chapter VI of title 5 of the Code of Federal Regulations is proposed to be amended as set forth below:

PART 1601—[AMENDED]

1. The authority citation for Part 1601 continues to read as follows:

Authority: 5 U.S.C. 8351, 8438, 8474(b)(5) and (c)(1).

2. Section 1601.1 is amended by revising the definition ''Interfund Transfer Request'' and adding in alphabetical order definitions of ''Acknowledgment of Risk'', ''Board'', and ''ThriftLine'', to read as follows:

§ 1601.1 Definitions.

* * * * *

Acknowledgment of Risk means an acknowledgment that any investment in the C Fund or the F Fund is made at the participant's risk, that the participant is not protected by the United States Government or the Board against any loss on the investment, and that neither the United States Government nor the Board guarantees any return on the investment.

* * * * *

Board means the Federal Retirement Thrift Investment Board.

* * * * *

Interfund transfer request means submission of a properly completed Interfund Transfer Request (Form TSP–30) or proper entry of an interfund transfer through use of the ThriftLine.

* * * * *

ThriftLine means the automated voice response system by which TSP participants may, among other things, make interfund transfer requests by telephone.

* * * * *

3. Section 1601.4 is amended by removing paragraph (c).

4. Section 1601.5 is revised to read as follows:

§ 1601.5 Methods of requesting an interfund transfer.

(a) To make an interfund transfer, participants may either submit to the TSP recordkeeper a properly completed Interfund Transfer Request (Form TSP–30), or may enter the interfund transfer request over the telephone by using the ThriftLine. Forms TSP–30 generated prior to October 1990, which were preprinted with a participant's name and address, described restrictions on the amounts which could be invested in the C Fund and the F Fund, and specified an effective date for the interfund transfer, are obsolete forms. They will be rejected by the TSP recordkeeper if submitted to make an interfund transfer request. Similarly, Form TSP–30–S, which was designed for use only by certain FERS participants to make interfund transfers effective as of the end of December 1990, are obsolete forms which will be rejected by the TSP recordkeeper if submitted to make an interfund transfer request.

(b) To make an interfund transfer request, a participant must designate the percentages of his or her account balance that are to be invested in the C Fund, the F Fund, and/or the G Fund. The percentages selected by the participant must be in multiples of 5 percent and must total 100 percent. An interfund transfer request has no effect on contributions made by a participant after the effective date of the interfund transfer (as determined in accordance with § 1601.6); such subsequent contributions will continue to be allocated among the investment funds in accordance with the participant's election under subpart B of this part.

(c) The percentages elected by the participant will be applied to the participant's account balance attributable to each source of contributions as of the effective date of the interfund transfer, as determined in accordance with § 1601.6.

(d) Participants who have at any time in the past invested any portion of their TSP accounts in the C Fund or the F Fund are eligible to make interfund transfer requests using the ThriftLine since they must, at some previous time, have submitted an Acknowledgment of Risk; such participants need not, if using Form TSP–30 to make a written interfund transfer request, complete the section of the form that contains the acknowledgment of risk. Participants who have not at any time in the past invested any portion of their TSP accounts in the C Fund or the F Fund are not eligible to make interfund transfers using the ThriftLine until a properly completed Acknowledgment of Risk for ThriftLine Interfund Transfer (Form TSP–32) has been received by the TSP recordkeeper. Participants who have not at any time in the past invested any portion of their TSP accounts in the C Fund or the F Fund must complete the Acknowledgment of Risk section of Form TSP–30 if they make a written interfund transfer request, unless a properly completed Form TSP–32 has been received by the TSP recordkeeper.

(e) An Interfund Transfer Request (Form TSP–30) that has been submitted to the TSP recordkeeper will not be processed and will have no effect, if:

(1) it is not signed and dated, or otherwise is not properly completed in accordance with the instructions on the form; or

(2) in the case of a participant who has not previously invested any portion of his or her TSP account in the C Fund or the F Fund and for whom a properly completed Form TSP–32 has not been received by the TSP recordkeeper, the acknowledgment of risk section of the Form TSP–30 is not signed; or

(3) the participant is not otherwise eligible to make an interfund transfer (e.g., because he or she is scheduled for a withdrawal of the entire account balance).

(f) If a Form TSP–30 is rejected, the form will have no effect. The participant will be provided with a brief written statement of the reason the form was rejected.

5. Section 1601.6 is revised to read as follows:

§ 1601.6 Timing and effective dates of interfund transfers.

(a) *Annual Limit.* A participant may have twelve interfund transfers made effective during any calendar year, one in each calendar month.

(b) *Effective dates.* Interfund transfer requests received by the TSP recordkeeper (whether by Form TSP–30 or on the ThriftLine) on or before the 15th day of a month (or, if the 15th day is not a business day, by the next business day) shall be effective as of the end of the month during which the interfund transfer request was received. Interfund transfer requests received by the TSP recordkeeper after the 15th day of a month (or, if applicable, by the next business day) will be effective as of the end of the month following the month during which the interfund transfer request was received. Account balances that are reallocated among the investment funds effective as of the end of any month will reflect the effects of all other account activity posted to the account effective during or as of the end of that month.

(c) *Multiple interfund transfer requests.*

(1) If two or more properly completed interfund transfer requests with different dates (as determined by paragraph (c)(3) of this section) are received for the same participant after the 15th day of one month (or, if applicable, after the next business day), but on or before the 15th day of the next month (or, if applicable, the next business day), the interfund transfer request with the latest date (as determined by paragraph (c)(3) of this section) will be made effective and the earlier interfund transfer request(s) will be superseded.

(2) If two or more properly completed interfund transfer requests with the same dates are received for the same participant after the 15th day of one month (or, if applicable, after the next business day), but on or before the 15th day of the next month (or, if applicable, the next business day), the following rules shall apply:

(i) If one or more of the interfund transfer requests was submitted using the ThriftLine and one or more was made on Form TSP–30, the request(s) made on the ThriftLine will supersede the request(s) made on Form TSP–30;

(ii) If more than one of the interfund transfer requests were made on the ThriftLine, the request entered at the latest time of day will supersede the earlier request(s); and

(iii) If more than one of the interfund transfer requests were submitted using Form TSP–30, all such forms will be rejected, unless they all contain identical percentage allocations among the TSP investment funds, in which case one will be accepted.

(3) For purposes of determining the date of an interfund transfer request:

(i) The date of an interfund transfer request made on the ThriftLine is the date of its telephone entry;

(ii) The date of an interfund transfer request made on Form TSP–30 is the signature date set forth on the form by the participant; and

(iii) Central time will be used for determining the date on which a transaction is entered on the ThriftLine.

(d) *Cancellation of interfund transfer requests.* Interfund transfer requests may be canceled either in writing or by entering the cancellation on the ThriftLine.

(1) *Cancellation by letter.* A participant may cancel an interfund transfer request by submitting a letter to the TSP recordkeeper requesting cancellation. To be accepted, the cancellation letter must be signed and dated and must contain the participant's name, Social Security number, and date of birth. To be effective, the cancellation letter must be received on or before the 15th day of the month as of the end of which the interfund transfer is to be effective (or, if applicable, by the next business day). Unless the letter states unambiguously the specific interfund transfer request it seeks to cancel, the written cancellation will apply to any interfund transfer request with a date (as determined under paragraph (c)(3) of this section) before the date of the cancellation letter. If the date of a cancellation letter is the same as the date of an interfund transfer request and the request was made on Form TSP–30, the Form TSP–30 will be canceled; if the request was made on the ThriftLine it will only be canceled if the written cancellation specifies the date of the ThriftLine request to be canceled.

(2) *Cancellation on the ThriftLine.*

(i) An interfund transfer request may also be canceled by entering the cancellation on the ThriftLine on or before the 15th day of the month (or, if applicable, the next business day) as of the end of which the interfund transfer is to be effective. A cancellation entered on the ThriftLine will apply to a pending interfund transfer request entered on the ThriftLine before the entry of the cancellation. A cancellation entered on the ThriftLine can only apply to interfund transfer requests submitted on Forms TSP–30 that were:

(A) Dated on or before the date of the cancellation; and

(B) Received and entered into the TSP recordkeeping system before the cancellation is attempted on the ThriftLine.

(ii) The Board cannot guarantee that the TSP recordkeeper will enter Forms TSP–30 into the TSP recordkeeping system before the 15th day of the month, regardless of the date the Form TSP–30 may have been received. Thus, participants cannot rely on the ThriftLine to cancel an interfund transfer request that was submitted on Form TSP–30, and participants are discouraged from attempting to do so. The Board is not responsible for any consequences of a participant's inability to cancel on the ThriftLine an interfund transfer request submitted on Form TSP–30.

[FR Doc. 95–12942 Filed 5–25–95; 8:45 am]

BILLING CODE 6760–01–M

DEPARTMENT OF AGRICULTURE

Agricultural Marketing Service

7 CFR Part 29

[Docket No. TB–95–12]

Tobacco Inspection; Standards

AGENCY: Agricultural Marketing Service, USDA.

ACTION: Proposed rule.

SUMMARY: The Department is proposing to revise the regulations for flue-cured tobacco to add a special factor to identify lots of tobacco that contain 25 percent of an adjacent stalk position. This rule will encourage producers to offer a more desirable product for market by separating stalk positions.

DATES: Comments are due on or before June 26, 1995.

ADDRESSES: Send comments to John P. Duncan III, Director, Tobacco Division,

Agricultural Marketing Service (AMS), United States Department of Agriculture (USDA), Room 502 Annex Building, P.O. Box 96456, Washington, D.C. 20090–6456. Comments will be available for public inspection at this location during regular business hours.

FOR FURTHER INFORMATION CONTACT: John P. Duncan III, Director, Tobacco Division, AMS, USDA, Room 502 Annex Building, P.O. Box 96456, Washington, D.C. 20090–6456. Telephone (202) 205–0567.

SUPPLEMENTARY INFORMATION: Notice is hereby given that the Department proposes to revise the Official Standard Grades for Flue-Cured Tobacco, U.S. Types 11–14 and Foreign Type 92 pursuant to the authority contained in the Tobacco Inspection Act of 1935, as amended (49 Stat. 731; 7 U.S.C. 511 *et seq.*).

The proposed revision will add a special factor (subgrade) to describe mixing of adjacent stalk positions. Stalk positions or groups as defined in the current standards are a division of a type covering closely related grades based on certain characteristics such as shape, body, or the general quality of tobacco. The traditional practice of sorting tobacco in the flue-cured marketing area has changed dramatically during the past decade. Producers are combining adjacent stalk positions which makes grading more difficult and has made U.S. tobacco less desirable for certain customers in the world market. This new special factor would identify any lot of tobacco which contains 25 percent of an adjacent stalk position.

The Flue-Cured Tobacco Cooperative Stabilization Corporation, composed of all flue-cured producers, recommended the adoption of a new mixed grade definition in a letter to the Department dated April 18, 1995. Also, an Advisory Committee, appointed by Congress to study the government tobacco program in 1995, included a similar recommendation in their final report dated April 27, 1995. The committee was composed of 31 members representing tobacco producers, dealers and manufacturers.

This rule has been determined not significant for the purposes of Executive Order 12866, and therefore has not been reviewed by the Office of Management and Budget.

This proposed rule has been reviewed under Executive Order 12778, Civil Justice Reform. This action is not intended to have retroactive effect. This proposed rule will not preempt any State or local laws, regulations, or policies, unless they present an irreconcilable conflict with this rule. There are no administrative procedures which must be exhausted prior to any judicial challenge to the provisions of this rule.

Additionally, in conformance with the provisions of the Regulatory Flexibility Act (5 U.S.C. 601 *et seq.*), full consideration has been given to the potential economic impact upon small business. All tobacco warehouses and producers fall within the confines of ''small business'' which are defined by the Small Business Administration (13 CFR 121.601) as those having annual receipts of less than $500,000, and small agricultural service firms are defined as those whose annual receipts are less than $3,500,000. The Administrator of the Agricultural Marketing Service, has determined that this action would not have a significant economic impact on a substantial number of small entities. This proposed rule would not substantially affect the normal movement of the commodity in the marketplace. Compliance with this proposed rule would not impose substantial direct economic cost, recordkeeping, or personnel workload changes of small entities, and would not alter the market share or competitive positions of small entities relative to the large entities and would in no way affect normal competition in the marketplace.

All persons who desire to submit written data, views, or arguments for consideration in connection with this proposal may file them with the Director, Tobacco Division, AMS, USDA, Room 502 Annex Building, P.O. Box 96456, Washington, D.C., 20090–6456, not later than (30 days after publication).

List of Subjects in 7 CFR Part 29

Administrative practice and procedure, Advisory committees, Government publications, Imports, Pesticides and pests, Reporting and recordkeeping requirements, Tobacco.

For the reasons set forth in the preamble, it is proposed that the regulations at 7 CFR Part 29 be amended as follows:

PART 29—TOBACCO INSPECTION

Subpart C—Standards

1. The authority citation for Part 29, subpart C is revised to read as follows:

Authority: 7 U.S.C. 511b, 511m, and 511r.

2. Section 29.1059 is revised to read as follows:

§ 29.1059 Special factor.

A symbol or term authorized to be used with specified grades. Tobacco to which a special factor is applied may meet the general specifications but which has a peculiar side or characteristic which tends to modify the grade. (See Rules 10, 21, 22, 26, 28, and 29.)

3. A new § 29.1135 is added to read as follows:

§ 29.1135 Rule 29.

Any lot of tobacco containing 25 percent or more of an adjacent group, which otherwise meets the specifications of a grade shall be treated as a special factor grade by placing the special factor ''M'' preceding the grademark.

4. In § 29.1181, the first sentence in the paragraph immediately following table ''13 Grades of Nondescript'', is revised to read as follows:

§ 29.1181 Summary of standard grades.

* * * * *

Special factors ''U'' (unsound), ''W'' (doubtful-keeping order), ''S'' (strip), and ''M'' (mixed) may be applied to all grades. * * *

Dated: May 19, 1995.

Lon Hatamiya,

Administrator.

[FR Doc. 95–12813 Filed 5–25–95; 8:45 am]

BILLING CODE 3410–02–P

Animal and Plant Health Inspection Service

9 CFR Part 130

[Docket No. 92–174–1]

RIN 0579–AA67

Import/Export User Fees

AGENCY: Animal and Plant Health Inspection Service, USDA.

ACTION: Proposed rule.

SUMMARY: We are proposing to amend existing user fees for certain import- and export-related services we provide for live animals and birds, animal products, organisms and vectors, and germ plasm and veterinary diagnostic services. We are also proposing to establish user fees for certain import- and export-related services we provide for live animals and birds, and animal products and byproducts. We are also proposing to make several miscellaneous changes, such as amending the definitions of certain words. These actions are necessary to help ensure that we recover our costs and to simplify and clarify the application of user fees for the public.

These actions are taken in accordance with the Food, Agriculture, Conservation, and Trade Act of 1990, as amended, which gives us the authority to set and collect these user fees.

DATES: Consideration will be given only to comments received on or before July 25, 1995.

ADDRESSES: Please send an original and three copies of your comments to Docket 92–174–1, Animal and Plant Health Inspection Service, Policy and Program Development, Regulatory Analysis & Development, 4700 River Road Unit 118, Riverdale, MD 20737–1238. Please state that your comments refer to Docket No. 92–174–1. Comments received may be inspected at USDA, room 1141, South Building, 14th Street and Independence Avenue SW., Washington, DC, between 8 a.m. and 4:30 p.m., Monday through Friday, except holidays. Persons wishing to inspect comments are requested to call ahead on (202) 690–2817 to facilitate entry into the comment reading room.

FOR FURTHER INFORMATION CONTACT: For information concerning services provided for live animals and birds, and germ plasm, contact Dr. Robert Kahrs, Director, National Center for Import and Export, VS, APHIS, 4700 River Road Unit 38, Riverdale, MD 20737–1231; (301) 734–3294.

For information concerning services provided for animal products and byproducts, organisms and vectors, contact Dr. Kathleen Akin, Senior Staff Veterinarian, Import/Export Products, VS, APHIS, 4700 River Road Unit 40, Riverdale, MD 20737–1231; (301) 734–7830.

For information concerning services provided for veterinary diagnostics, contact Dr. Joan M. Arnoldi, Director, National Veterinary Services Laboratories, P.O. Box 844, Ames, IA 50010; (515) 239–8266.

For information concerning fees, contact Ms. Barbara Thompson, Chief, Financial Systems and Services Branch, Budget and Accounting Division, APHIS, 4700 River Road Unit 54, Riverdale, MD 20737–1232; (301) 734–5901.

SUPPLEMENTARY INFORMATION:

Background

The Food, Agriculture, Conservation and Trade Act of 1990, as amended (referred to below as the Farm Bill), authorizes the Secretary of Agriculture, among other things, to prescribe and collect fees to reimburse the Secretary for the cost of carrying out the provisions of the Federal animal quarantine laws that relate to the importation, entry, and exportation of animals, articles, or means of conveyance (section 2509(c)(1) of the Farm Bill). The Secretary of Agriculture is also authorized, under section 2509(c)(2) of the Farm Bill, to prescribe and collect fees to recover the costs of carrying out certain veterinary diagnostics services.

The user fee regulations in 9 CFR part 130 (referred to below as the regulations) prescribe user fees that the Animal and Plant Health Inspection Service (APHIS) of the U.S. Department of Agriculture (USDA) collects for various services that we provide. The regulations currently include fees for: (1) Endorsing export certificates for animals; (2) providing quarantine services within the United States for imported animals; (3) providing certain inspection and supervision services within the United States for animals intended for export; (4) conducting certain veterinary inspections outside the United States; and (5) conducting certain veterinary diagnostics services.

Our user fees are calculated to cover the full cost of providing the service for which the fee is charged. The cost of providing a service includes direct labor and direct material costs. It also includes administrative support, agency overhead, and Departmental charges.

Direct labor costs are the costs of employee time spent specifically to provide the service. For example, at APHIS's Animal Import Centers, animal caretakers and veterinarians prepare for the arrival of animals or birds to be quarantined in the Center, care for them (feed, water, clean cages or stalls) while they are quarantined, observe them while they are quarantined, release them from quarantine, and clean the quarantine area afterwards. These are all direct labor costs. For other services, the direct labor costs would be different. For example, if the service is testing a tissue sample for disease-causing organisms, then direct labor costs include the time spent by laboratory personnel to prepare the sample, conduct the test, and read the test. Or, if the service is inspecting an animal, the direct labor costs include the time spent by the inspector to conduct the inspection. Direct labor costs vary with the type of service provided.

Direct material costs include the cost of any materials needed to supply the service. For example, among other things, animals in quarantine need feed, water and bedding, disinfectants, and pharmaceuticals (for preparation of any needed tranquilizers). These are all direct material costs. Again, direct material costs are different for different services. For example, direct material costs for conducting a laboratory test would include animals, eggs, glassware, chemicals, and other supplies necessary to perform the test.

Administrative support costs include local clerical and administrative activities; indirect labor hours (supervision of personnel and time spent doing work that is not directly connected with the service but which is nonetheless necessary, such as repairing equipment); travel and transportation for personnel; supplies, equipment, and other necessary items; training; general supplies for offices, washrooms, cleaning, etc.; contractual services (such as guard service, maintenance, trash pickup, etc.); grounds maintenance; chemicals and glassware; and utilities (such as water, trash pickup, telephone, electricity, natural and propane gas, heating and diesel oil). Some administrative support items may be contractual or not, depending on local circumstances. For example, trash pickup may be provided as a utility or a contractual service. However, the costs are all administrative support. As with direct labor and direct material costs, the type, amount and cost of administrative support vary with the type of service provided.

Agency overhead is the pro-rata share, attributable to a particular service, of the management and support cost for all agency activities. Included are the cost of providing budget and accounting services, management support, including the Administrator's office and support at the regional level, personnel services, public information service, and liaison with Congress.

The final cost item included in the calculation, Departmental charges, is APHIS's share, expressed as a percentage of the total cost, of services provided centrally by the Department of Agriculture (Department). Services the Department provides centrally include the Federal Telephone Service; mail; National Finance Center processing of payroll, billing, collections, and other money management; unemployment compensation; Office of Workers Compensation Programs; and central supply for storing and issuing commonly used supplies and Department forms. The Department notifies APHIS how much the agency owes for these services. We have included a pro-rata share of these Departmental charges, as attributable to a particular service, in our fee calculations. An outline of the basic process is shown below. The actual components, quantities, and costs used to calculate the fee are different for each service.

The basic steps in the calculation, for each particular service, are:

1. Determine the following costs:
direct labor;
direct material;
pro-rata share of administrative support;
pro-rata share of agency overhead; and
pro-rata share of Departmental charges;

2. Add all costs;

3. Estimate, based on past experience, the frequency of service, that is, the number of times the service will be performed in one year; and

4. Divide the total of all costs by the frequency of service.

The result of these calculations is the total cost to provide a particular service one time.

When we first adopted user fees, we determined that our user fees for import- and export-related services should be rounded up to the nearest quarter. The amended user fees proposed in this document are also rounded up to the nearest quarter. This is necessary in order to ensure that we collect enough revenue to cover the costs of providing these services. If we were to round down, many fees would be lower than the cost of the service. As we would not have a reserve fund, there would be no funds for us to draw on to make up the deficiency.

As we stated at the time we published our current user fees (see Docket 92–042–2, 58 FR 67647–67656, at p. 67649), we intend to review our user fees at least annually to ensure that they accurately reflect the cost of the services provided, and to publish any necessary adjustments in the **Federal Register**.

We have therefore reviewed our records of user fees collected during fiscal years (FYs) 1992 through 1994. Our current user fees are based on FY 1990 costs. In the four years since then, there has been an overall increase in all costs of providing services, due to inflation and general economic conditions. Additionally, we underestimated personnel costs when we set our current fees. For example, in addition to anticipated federal pay increases (4.2 percent in FY 1992 and 3.7 percent in FY 1993), in FY 1994 there were locality pay and cost of living increases of 3.09 to 8 percent for employees stationed in different parts of the United States. We also underestimated support costs, such as clerical support, office rent, telephone, etc., in setting our current user fees. It is also now apparent that we overestimated our anticipated revenues when setting our current fees. For example, unexpected drops in both the number of animals exported from the United States and the number of export certificates requested has resulted in a correspondingly unexpected drop in user fees collected for export-related services.

As a result of general cost increases, and our errors in estimating costs and revenues, we did not collect enough money in user fees during FYs 1992 through 1994 to cover the costs of providing the services for which we charged fees. In fact, for each of those fiscal years, we incurred a deficit of over $1 million. As our user fees are intended to recover full cost, it is apparent that our user fees are too low and must be raised to reflect changes in direct labor costs, direct material costs, administrative support costs, Agency overhead, and other expenses.

In addition, based upon our review, we believe certain existing user fees should be restructured. For example, some general fees need to be broken down into more specific fees. Also, some new fees need to be established to cover services which we provide, but for which we are not now charging a user fee. The specific proposed user fee changes are discussed below under ''Revised Fees.''

In addition, we are proposing to amend certain provisions of the regulations to clarify their intended meaning. The specific changes are discussed below under ''Miscellaneous.''

Revised Fees

Hourly and Minimum User Fees (§§ 130.3, 130.5, 130.6, 130.7, 130.9, 130.10, and 130.21)

Our user fees are calculated to recover our costs to provide routine services. Our personnel often conduct inspections and provide supervision for animals and birds within the United States that are different from or in addition to our flat fee services, which are discussed under ''Flat Rate User Fees'' below. In those instances, we charge an hourly rate user fee to recover these costs. However, these hourly rates do not ensure that our basic costs are always covered. We developed the minimum fee primarily to cover the costs of handling unusually small importations at ports of entry. Therefore, we charge an hourly rate user fee, with a minimum fee, for services in the following areas: APHIS Animal Import Centers; privately operated temporary import quarantine facilities; import or entry of live animals; miscellaneous import or entry services; endorsement of export health certificates; inspection and supervision provided within the United States for animals, birds, and animal products and byproducts intended for export; and veterinary diagnostics.

We are proposing to revise our hourly and minimum fees, which are listed in §§ 130.3, 130.5, 130.6, 130.7, 130.9, and 130.21, to reflect projected FY 1995 costs. These user fees need to be amended due to increased direct labor costs, direct material costs, agency overhead, administrative support, agency overhead, and Departmental charges.

For the reasons stated above, we are proposing to amend §§ 130.3, 130.5, 130.9, and 130.21 to increase the hourly and quarter-hour user fees from $50.00 to $56.00 and from $12.50 to $14.00, respectively. Additionally, we are proposing to amend §§ 130.5, 130.6, 130.7, 130.9, and 130.21 to increase the minimum user fee for any service provided on an hourly basis from $16.00 to $16.50.

Further, in many of these sections, we are proposing to make changes to clarify the application of the user fee. These proposed changes are discussed below.

User Fees for Exclusive Use of Space at APHIS Animal Import Centers (§ 130.3)

Section 130.3 includes a provision allowing importers, at their option, to request space at certain APHIS Animal Import Centers for the exclusive use of the animals for which the request was made. The user fee for this service is a single, monthly rate. Section 130.3(a)(1) designates the South Wing and North Wing at the Miami, FL, Animal Import Center and 5,904 sq. ft. (548.5 sq.m.) at the Newburgh, NY, Animal Import Center as available for exclusive use. The exclusive use space at Newburgh, NY, is designated in terms of square footage only because there are several buildings that meet those specifications. As a result, the buildings may be used interchangeably, depending upon the number and type of animals for which the space is being requested. However, any building that is utilized for this service will be occupied only by the specific animals for which the service was requested. The overall operating costs for these designated spaces have increased, mainly due to increases in locality pay, direct labor, and supplies. Therefore, we are proposing to revise the monthly user fee charged for this service.

Additionally, we are proposing to make an additional space available for exclusive use at the Newburgh, NY, Animal Import Center. This additional space, which would be designated as Space B, would provide 9,742 sq.ft. (905 sq.m.) for exclusive use. The proposed user fee for this service would be $78,555.00 per month. If this proposed amendment is adopted, we will designate the existing exclusive use

space currently being charged on a monthly basis at the Newburgh, NY, Animal Import Center as Space A to avoid confusion. As stated above, proposed newly-designated Spaces A and B would represent available square footage, not specific buildings.

User Fees for Services Conducted Outside an APHIS Employee's Normal Tour of Duty (§§ 130.5, 130.9, & 130.21)

We often receive requests for services outside of employees' normal tours of duty. Employees' normal tours of duty are those hours, during the business hours of the facility where the employees work, when employees are scheduled for duty. Employee's normal tours of duty do not include Federal holidays or holidays that are observed locally. For example, our facilities and employees in foreign countries observe local holidays. When we provide services outside employee's normal tours of duty, we charge reimbursable overtime in accordance with existing regulations, in addition to the APHIS user fee for each service. This action, which became effective on January 21, 1994 (58 FR 67647–67656, Docket No. 92–042–2), was necessary to fully recover our costs of providing user fee services on overtime.

When this action became effective, several importers and exporters raised concerns about paying the user fee plus reimbursable overtime when the user fee is charged at the hourly rate. In these cases, both the user fee and the reimbursable overtime fee are structured on a direct labor hourly basis, and consequently, some users perceived that they were being billed twice for the services.

We have re-examined this requirement and propose to revise it regarding charging reimbursable overtime in connection with the hourly user fees.

Consequently, we propose to amend §§ 130.5, 130.9, and 130.21 to charge a premium user fee rate of $65.00 per hour on weekdays and holidays and $74.00 per hour on Sundays for each employee required to conduct a service outside of the regular tour of duty. These rates were determined by calculating the average grade and step of APHIS field personnel and applying the Federal salary for an individual at that grade level. The rates for weekdays, holidays, and Sundays are different because the rate of basic pay for employees is different for these days [1]: holiday pay is one-and-one-half times the hourly pay for regularly scheduled weekday duty; Sunday pay is twice the hourly pay for regularly scheduled weekday duty. If a holiday falls on a Sunday, the highest applicable rate of pay applies, that is, Sunday pay.

If this proposal is adopted, we will charge only the premium user fee for hourly user fee services performed outside an APHIS employee's normal tour of duty.

We charge hourly user fees for providing miscellaneous veterinary services related to the import, entry or export of live animals, animal products, organisms and vectors, and germ plasm. We charge hourly user fees in these cases as it would be difficult to establish a flat fee. This is because costs vary widely from one customer to another; consequently, a flat fee would be very inequitable to some importers and exporters. Because the hourly user fees are structured to more directly charge importers and exporters for the exact time required to provide the service, we believe we should establish hourly fees for work performed on overtime, rather than specify that two hourly rates be charged.

Other user fees that are charged on a flat rate basis, for example, per animal inspected or certificate issued, represent an average of the costs for providing the service during normal working hours. For example, the fee for issuing an export health certificate is calculated by determining the average time it takes to research the requirements of the destination country, advise an exporter, verify test results or certification statements or both, endorse a certificate, and complete the necessary paperwork. In these cases, we will continue to charge the flat rate user fee plus reimbursable overtime, or we would not recover our costs. In the example given above, an office may spend several hours during the normal working day to research the requirements of the destination country and advise the exporter. If the exporter comes in after normal working hours and only reimbursable overtime is charged for verifying the tests and endorsing the certificate, APHIS will not recover costs for related services performed during the day, or the time spent the next day to file the paperwork.

User Fees for Inspection and Supervision Services Provided Within the United States for Export Animals, Birds, and Animal Products and Byproducts (§ 130.21)

Section 130.21 covers user fees for APHIS services provided in the United States for the export of animals, birds, and animal products and byproducts. For the convenience of the public, this section lists examples of the types of services we perform. Therefore, we are proposing to amend § 130.21 to add the following service to the list of inspection and supervision services we provide within the United States for the export of animals, birds, and animal products and byproducts: Approving or inspecting an embryo or semen collection center or the animals in it. We currently charge a user fee for these services. We are proposing to add this service to the inspection and supervision services list to eliminate some recent confusion regarding our ability to charge for these particular services.

Because it is impracticable to list all the services that we provide, we are also proposing to add a statement that § 130.21 covers export or embarkation services not specified elsewhere in the regulations. This proposed change would make this section equivalent to § 130.9, which governs user fees for APHIS services provided for importation or entry of animals, birds, and animal products and byproducts.

Further, we are proposing to add a statement to make it clear that the user fees established in § 130.21 will be charged for each employee assigned to perform the service. We believe these proposed amendments will provide users further clarification of our user fees.

Flat Rate User Fees

We charge a flat rate user fee for services that do not vary widely in the amount of time needed to complete them. These user fees are based on time (daily, monthly, etc.); commodity (animal, animal product, germ plasm, etc.); service (endorsement, inspection, supervision); measurement (certificate, load, lot, etc.); or purpose (breeder, feeder, slaughter, etc.). The flat rate user fees also reflect the average cost of providing particular services on a nationwide basis. As with the hourly user fees, the flat rate fees must recover our costs for direct labor, direct material, agency overhead, administrative support, agency overhead, and Departmental charges. As with the hourly user fees (see discussion above), these costs have increased.

[1] See 5 U.S.C. 5542 and 5 CFR 550.113, and Salary Tables published by the United States Office of Personnel Management, Personnel Systems and Oversight Group, Office of Compensation Policy, Theodore Roosevelt Building, 1900 E Street NW, Washington, DC 20415–0001.

Therefore, we are proposing to revise the flat rate user fees contained in §§ 130.2, 130.3, 130.6, 130.7, 130.8, 130.10, and 130.20. We are also proposing to amend the flat rate user fee, contained in § 130.16, for virus isolation testing for certain diseases, due to the volume of testing done. This proposed change will clarify how we charge for those tests and will lower their costs. We are proposing other changes to some of these sections, which are discussed below.

User Fees for the Importation or Entry of Live Animals (§§ 130.6 and 130.7)

Section 130.6(a) provides for user fees for various services related to import or entry of live animals along the United States-Mexico border. These services include inspecting and supervising the following animals for import or entry into the United States: feeder animals; slaughter animals; horses other than slaughter; in-bond and in-transit animals; and any other ruminants. Sometimes, these animals are denied entry into the United States or importers withdraw their requests for importation after we have provided services. Despite these circumstances, APHIS employees must provide the same services that are provided to animals that enter the United States. In order to recover our costs for these services, we are proposing to amend § 130.6(a) to add a statement to make it clear that the user fees in this section apply to live animals presented for importation into the United States, whether or not the animals enter the United States.

Section 130.7 also includes inspecting and processing cattle, swine, sheep and goats that are imported in-bond or in-transit movement through the United States. Often, after our employees have performed these services, these animals are denied entry into the United States or the importer withdraws the request for entry. For the reason stated above, we are proposing to amend § 130.7(a) to add a statement to make it clear that the user fees in this section apply to live animals presented for importation into the United States, whether or not the animals are allowed entry into the United States.

Section 130.7 provides user fees for various services related to import or entry of live animals at ports other than along the United States-Mexico border. These services include inspecting and processing all types of animals that are imported and moved directly to slaughter, and poultry (including eggs) that are imported for any reason. We currently charge a user fee per load for services we provide to these animals. Consistent with industry usage of the term, we defined ''load'' to mean all the animals or birds carried on one vehicle. In practice, however, we have found that we do not recover our full costs when we charge for services per load because some importers or brokers share the use of a vehicle. When this happens, we perform at least two times the amount of services for one fee. Therefore, we are proposing to charge this user fee for slaughter animals and poultry that are presented for importation into the United States and that originate from the same importer address, are destined for the same address, and require one entry permit or authorization. This would allow us to charge importers or brokers individually for the services provided to them. This change would require revision of the definition for ''load'' in § 130.1 (see discussion below under ''Miscellaneous'').

The processing or supervision of in-bond or in-transit animals in accordance with § 130.7 of the regulations often occurs at locations other than an official port of entry, that is, the one listed on the import permit or accompanying document. For example, air traffic flight patterns or fueling needs may require an aircraft destined for Guam to land in Alaska. Although the official port of entry would be Guam, in this situation we would provide the necessary services in Alaska, and we would charge a user fee for the services provided in Alaska. To clarify this, we are proposing to amend § 130.7(a) to add a statement to note one in the table stating that the user fees in this section apply to services provided for the importation of in-bond or in-transit animals wherever the service is provided.

User Fee for Germ Plasm Containers (§ 130.8)

Among other things, § 130.8 contains user fees for each permit we issue for germ plasm being imported into the United States and each certificate we endorse for germ plasm being exported from the United States. These services include checking the accuracy of information submitted, completing various forms, maintaining files, and issuing or endorsing documents.

For germ plasm being imported into the United States, we charge this fee per permit; however, germ plasm is not imported under individual permit. Therefore, we are proposing to charge the user fee per load (see discussion below under ''Miscellaneous'').

For germ plasm being exported from the United States, we inspect and reseal the containers to confirm that the contents match what we have endorsed on the certificate. To recover our costs relating to this service, we are proposing to add a footnote to the table in § 130.8 to clarify that the user fee for germ plasm being exported from the United States includes a single inspection and resealing of the container in which the germ plasm is being exported. Any subsequent inspections and resealing of the container would be charged at the applicable hourly rate.

If germ plasm containers that had been exported are returned empty and presented for importation into the United States, we inspect the containers to ensure that they are adequately cleaned and disinfected. To recover our costs for this service, we are proposing to charge the applicable hourly rate. This would be clarified by a footnote, which would be added to the table in this section.

Section 130.8 also provides for a user fee for approving establishments, warehouses, and facilities under 9 CFR parts 94 through 96, to receive or treat various animal products and byproducts imported into the United States. As explained in the discussion under ''Flat Rate User Fees'' above, we are proposing to revise these fees to cover our increased direct labor costs to complete all paperwork, agreements, and inspections. Additionally, we are proposing to revise our regulations to clarify that these fees cover all program-required inspections during the year. For example, the yearly user fee for program inspections of a facility during a 3-year approval period would be $262.75 for the first year, $152.00 for the second year, and $152.00 for the third year, for a total of $566.75 for a 3-year period. However, if APHIS personnel determine that it is necessary to conduct additional special inspections, other than routine program inspections, they will charge the applicable hourly user fee.

User Fees for Pet Birds (Proposed new § 130.10)

We are proposing to add specific user fees for pet birds quarantined in an APHIS owned or supervised quarantine facility. Our current user fees for pet birds, contained in § 130.8, apply only to pet birds which are not required to be quarantined in an APHIS owned or supervised quarantine facility.

Regulations governing the importation of pet birds are contained in 9 CFR part 92. Pet birds are defined in § 130.1 as ''birds which are imported for the personal pleasure of their individual owners and are not intended for resale.'' Pet birds which must be quarantined in an APHIS owned or supervised quarantine facility, in accordance with 9 CFR part 92, are normally quarantined

for 30 days. The proposed fee would be assessed per isolette, per day. That is, all the birds quarantined in one isolette would be covered by one fee, which would be assessed daily for the duration of the quarantine.

This proposed user fee would recover all costs involved with feed, housing, care, and handling of the birds. The proposed user fee would not recover the costs of testing the birds for which separate user fees apply. However, the proposed user fee would account for marginal decreases in our costs per bird when more than one bird is kept in an isolette. Based on the information provided by the person requesting the service, APHIS personnel at the APHIS owned or supervised quarantine facility would determine the appropriate number of birds that should be housed per isolette. For example, an isolette might house 5 small parakeets but only 1 large cockatoo, depending on the sizes of the individual birds. Birds belonging to different owners would not be housed in the same isolette. If individual owners of pet birds request that their birds be housed individually or in a smaller group of birds per isolette than that isolette could hold, the user fee would apply per isolette based upon the actual number of birds quarantined in each isolette. As another example, an individual pet bird owner may only have one pet bird to quarantine. Regardless of the size of the bird, the fee for one bird in an isolette would apply.

Section 130.2 provides user fees for individual animals and birds quarantined in APHIS Animal Import Centers. As discussed above, we are proposing to establish specific user fees for pet birds. To eliminate any possible confusion, we are proposing to change the heading and the table in paragraph (a) of § 130.2 to indicate that the user fees in this section do not apply to pet birds imported into the United States under 9 CFR part 92.

User Fees for Multiple and Subsequent Antigen Tests (§ 130.14)

Section 130.14 provides user fees for tests performed at the National Veterinary Services Laboratories (NVSL) in connection with the importation or exportation of animals or birds. These tests include Agar gel immunodiffusion, buffered acidified plate antigen presumptive, card, competitive enzyme linked immunosorbent assay, and complement fixation, among others. When necessary to expedite results, some of these tests may be performed at authorized sites other than NVSL. For example, card tests may be performed by APHIS personnel on cattle at certain U.S. border ports. In order to recover our costs related to conducting these tests, we are proposing to amend § 130.14 to make it clear that the user fees in this section apply to tests conducted at NVSL or at any authorized site, except the Foreign Animal Disease Diagnostic Laboratory (FADDL). The user fees for laboratory tests performed at FADDL are provided separately, because FADDL works with agents of diseases exotic to the United States, which require more expensive biosecurity measures.

In addition, § 130.14 provides tiered user fees for three tests—complement fixation (CF), hemagglutination inhibition (HI), and virus neutralization (VN). That is, there is one fee for the first CF, HI, and VN test on a sample, and a second, lower user fee for each additional test of the same type on the same sample. Paragraph (a) of § 130.14 contains an explanation and example of this tiered user fee. Some users have interpreted the example to mean the user fee is reduced for each additional test, regardless of type. We are proposing to amend this section to make it clearer that any reduction in cost for multiple antigen tests is for tests of the same type on the same sample.

User Fees for Virus Isolation Testing (§ 130.16)

Section 130.16 provides user fees for laboratory tests we perform as part of reference assistance testing. Reference assistance testing is defined in § 130.1 of the regulations as ''tests conducted by APHIS at the request of a veterinarian, state animal health official, or university, to either establish or confirm a diagnosis.'' Section 130.16(a)(3) includes a user fee for virus isolation testing. This test is administered when various viral diseases, including avian diseases, are suspected. Because virus isolation tests for Newcastle disease are often administered in conjunction with bird quarantines, they are performed more often and in larger numbers than virus isolation tests for other avian or mammalian diseases. This larger volume results in lower costs per test for Newcastle disease. Therefore, we are proposing to charge a separate user fee for virus isolation tests for Newcastle disease. The proposed user fee would be $14.00 per test for this disease only. The user fee will remain at $29.75 for all other virus isolation tests, including tests for all other avian viral diseases. This would save users $15.75 per test for Newcastle disease.

Section 130.16 also provides tiered user fees for two tests—complement fixation (CF) and virus neutralization (VN). That is, there is one fee for the first CF and VN test on a sample, and a second lower user fee for each additional test of the same type on the same sample. As discussed above under ''User Fees for Multiple and Subsequent Antigen Tests (§ 130.14),'' some users found our explanation and example of reduced cost for multiple antigen tests to be confusing. For that reason, we are proposing to revise the note to make it clearer that any reduction in cost for multiple antigen tests is for tests of the same type on the same sample.

User Fees for the Johnin Diagnostic Reagent (§ 130.17)

Section 130.17 provides user fees for diagnostic reagents, slide sets, and tissue sets provided by APHIS. Section 130.17(a) lists the user fee for Johnin OT, a diagnostic reagent, as $12.25 per 10-ml unit. The 10-ml unit for Johnin OT is incorrect. The standard unit is 2 ml. Therefore, we are proposing to amend § 130.17(a) to correct the listing for Johnin OT to read $12.25 per 2-ml unit. Although this correction, if adopted, will increase user costs for this diagnostic reagent from $2.25 per ml to $6.13 per ml, it will make the Johnin OT user fee equivalent to the other similar diagnostic reagents and will allow us to recover the full cost for providing the Johnin OT.

User Fees for Special Shipping and Handling of Reagents (§§ 130.14, 130.15, 130.16, 130.17, and 130.18)

We charge user fees for certain veterinary diagnostic services, including providing certain diagnostic reagents, slide sets, and tissue sets. Veterinary diagnostics is the work performed in a laboratory to determine if a disease-causing organism or toxin is present in body tissues or cells. We also consider sterilization by gamma radiation to be a veterinary diagnostic service. Often, providing these veterinary diagnostic services requires special mail handling, such as express, overnight, or foreign mailing. The cost of this special mail handling is not included in the costs of providing diagnostic reagents, slide sets, and tissue sets. Therefore, we are proposing to charge the costs for special mail handling to the person who requests the service.

User Fees for Endorsing Export Health Certificates (§ 130.20)

Section 130.20 provides user fees for each export health certificate requested for the exportation of animals or birds. These user fees are intended to cover the many steps associated with endorsing the certificates. The steps include reviewing the health certificates; confirming that the importing country's requirements have

been met; verifying laboratory test results for each animal if tests are required; reviewing any certification statements required by the importing country; and endorsing, or signing, the certificates. These user fees also cover our costs for administrative support (area office rent, utilities, supplies, etc), agency overhead, and Departmental charges.

Section 130.20(c) states that ''* * * user fees prescribed in this section will not apply to an export health certificate if it is endorsed by an APHIS veterinarian in the course of performing inspection or supervision services for the animals listed on the certificate.* * *'' As explained in a final rule published in the **Federal Register** on January 9, 1992 (57 FR 755–773, Docket No. 91–135), this means that when an APHIS veterinarian endorses an export health certificate in the course of conducting supervision or inspection services concerning the export animals listed on the certificate, only the hourly user fee applies. Since the publication of that rule, we have found that in some cases all the steps necessary to endorse the export health certificate, except signing the certificate, are performed at separate times from the hourly inspection services. Thus, we do not recover all our costs related to preparing the certificate for signature by charging the hourly user fee. Therefore, we are proposing to amend § 130.20 to exempt from the flat rate user fee only those export health certificates that are prepared for endorsement completely on site of the inspection as an integral part of the inspection service. In these cases, the appropriate hourly user fee (hourly, premium, reimbursable overtime) would apply.

Sometimes, our veterinarians are unable to endorse the export health certificates because importers withdraw their requests for export health certificates after services have been performed. Despite these circumstances, APHIS employees must provide the same services that are provided for animals that are exported from the United States. In order to recover our costs related to services for exporters requesting export health certificates that are not endorsed, we are proposing to charge the minimum user fee of $16.50, which was developed primarily to cover the costs of handling unusually small importations at ports of entry. The minimum user fee would apply for each export health certificate that meets this description.

The export health certificates discussed above are requested for various categories of animals and birds, including slaughter animals of all types moving to Canada or Mexico; non-slaughter horses moving to Canada; poultry; hatching eggs; animal products; and other animals and birds. Under the last category, we have included any other endorsements or certifications that may be needed for other animals and birds not already listed. However, we are often asked to endorse or certify articles that may not fall under the definitions of animals or birds. For example, we are frequently asked to issue export certificates for edible fish eggs. As our user fee regulations do not include a category for these articles, we are not recovering our costs for providing this service. Therefore, we are also proposing to amend § 130.20(a) to replace the ''animals and birds'' category with a category for ''other endorsements or certifications.''

Section 130.20(c) contains a CFR reference that was not corrected in a previous document when this section was redesignated. Therefore, we are proposing to amend § 130.20(c) to reference § 130.21 instead of § 130.7. This correction would align export services. It would not affect any costs.

Miscellaneous

We are also proposing to make several miscellaneous changes to clarify how certain user fees are to be applied. We believe these changes would make it easier for users to determine their costs.

Payment of User Fees (§ 130.50)

Section 130.50 provides procedures for the payment of user fees. Among other things, it provides that user fees may be paid, under certain circumstances, by cash, check, money order, or credit card. This section allows payment by all types of checks, including traveler's checks, but it does not specify to whom the checks must be made payable. Therefore, we are proposing to amend § 130.50 to allow payment of user fees by check, including traveler's check, drawn on a U.S. bank and made payable to the ''U.S. Department of Agriculture'' or ''USDA.'' Additionally, we are proposing to allow payment by credit card (VISA [*Insert trademark symbol*] or MasterCard [*Insert trademark symbol*]) at any APHIS Animal Import Center or APHIS office that is equipped to handle credit cards. We would add a footnote advising the public that they may obtain a list of such offices or centers from the Animal and Plant Health Inspection Service, Veterinary Services, National Center for Import and Export, 4700 River Road Unit 38, Riverdale, MD 20737–1231.

Definitions (§ 130.1)

Section 130.1 defines various terms used in the regulations. Currently, the regulations include a definition of ''load.'' As discussed under the ''Flat Rate User Fees: User Fees for the Importation or Entry of Live Animals (§§ 130.6 and 130.7)'' above, we are proposing to revise the basis by which we determine the user fee for certain live animals presented for importation into the United States. As discussed under ''User Fee for Germ Plasm Containers (§ 130.8)'' above, we are also proposing to revise the basis by which we determine the user fee for germ plasm presented for importation into or exportation from the United States. To accommodate these changes, we are proposing to amend the definition of ''load'' to read ''Those animals, poultry, or germ plasm, presented for importation into the United States in a single shipment, that originate from the same importer address, are destined for the same address, and require one entry permit or authorization.''

The regulations define ''pet bird'' to mean birds which are imported for the personal pleasure of their individual owners and are not intended for resale. We are proposing to amend this definition to make it consistent with the definition of pet birds found in 9 CFR part 92. The proposed definition for pet birds would read ''Birds, except ratites, which are imported for the personal pleasure of their individual owners and are not intended for resale.''

Additionally, the regulations do not define ''test'' or ''United States.'' These omissions have led to misunderstandings. Defining these terms would help eliminate confusion. Therefore, we propose to amend § 130.1 by defining these terms as follows: (1) ''Test'' means a single analysis performed on a single specimen from an animal, animal product, commercial product, or animal feed; and (2) ''United States'' means the several States of the United States, the District of Columbia, Guam, the Commonwealth of Northern Mariana Islands, the Commonwealth of Puerto Rico, the Virgin Islands of the United States, and all other territories and possessions of the United States.

Executive Order 12866 and Regulatory Flexibility Act

This proposed rule has been reviewed under Executive Order 12866. This rule has been determined to be significant for the purposes of Executive Order 12866 and, therefore, has been reviewed by the OMB. This proposed rule updates certain fees related to import/export inspection and certification, animal

quarantine, and veterinary diagnostics. Some of the current fees must be changed to ensure full recovery of APHIS' costs. The proposed amendments would also provide further clarification of the Agency's user fee collection process.

The proposed rule would, if adopted, increase user fee collections by about $2.5 million each year. This would result in an annual taxpayer savings of about $2.5 million, since these APHIS expenses would not be funded by general tax revenues.

Fee revisions included in this proposed rule could impact some importers/exporters of live animals, importers/exporters of animal byproducts, and firms that seek APHIS' veterinary diagnostic services. The revised fees are expected to have a relatively minor impact on ''small'' entities since the amount of increase represents only a small fraction (less than 1 percent) of the typical cost of purchasing and permanently importing a breeding grade registered animal into the United States. That cost is between $1,500 and $5,000. Purchase and import costs for feeder and slaughter animals are usually significantly lower per animal, but can easily exceed $1,500 per animal. The price increases included in this proposed rule range from $0.25 to $31.75 per animal. The average cost increase is about $4.89 per animal. That is less than 1 percent of purchase and import costs.

Executive Order 12778

This proposed rule has been reviewed under Executive Order 12778, Civil Justice Reform. If this proposed rule is adopted: (1) All State and local laws and regulations that are inconsistent with this rule will be preempted; (2) no retroactive effect will be given to this rule; and (3) administrative proceedings will not be required before parties may file suit in court challenging this rule.

Paperwork Reduction Act

In accordance with the Paperwork Reduction Act of 1980 (44 U.S.C. 3501 *et seq.*), the information collection or recordkeeping requirements included in this proposed rule have been approved by the Office of Management and Budget (OMB), and there are no new requirements. The assigned OMB control numbers are 0579–0015, 0579–0055, and 0579–0094.

List of Subjects in 9 CFR Part 130

Animals, Birds, Diagnostic reagents, Exports, Imports, Poultry, Quarantine, Reporting and recordkeeping requirements, Tests.

Accordingly, 9 CFR part 130 would be amended as follows:

PART 130—USER FEES

1. The authority citation for part 130 would continue to read as follows:

Authority: 7 U.S.C. 1622; 19 U.S.C. 1306; 21 U.S.C. 102–105, 111, 114, 114a, 134a, 134b, 134c, 134d, 134f, 135, 136, and 136a; 7 CFR 2.17, 2.51, and 371.2(d).

2. In § 130.1, (the definition for ''*Germplasm*'' would be removed and added in its place; the definitions of *load* and *pet bird* would be revised; and definitions for ''Germ plasm'' ''test'' and ''United States'' would be added, in alphabetical order, to read as follows:

§ 130.1 Definitions.

* * * * *

Germ plasm. Semen, embryos, or ova.

* * * * *

Load. Those animals, poultry, or animal germ plasm, presented for importation into the United States in a single shipment, that originate from the same importer address, are destined for the same address, and require one entry permit or authorization.

* * * * *

Pet birds. Birds, except ratites, which are imported for the personal pleasure of their individual owners and are not intended for resale.

* * * * *

Test. A single analysis performed on a single specimen from an animal, animal product, commercial product, or animal feed.

United States. The several States of the United States, the District of Columbia, Guam, the Commonwealth of Northern Mariana Islands, the Commonwealth of Puerto Rico, the Virgin Islands of the United States, and all other territories and possessions of the United States.

* * * * *

3. Section 130.2 would be amended as follows:

a. In the section heading, before the word ''birds'', by adding the word ''certain''.

b. In paragraph (a), by revising the table to read as set forth below.

§ 130.2 User fees for individual animals and certain birds quarantined in APHIS Animal Import Centers.

(a) * * *

Animal or bird	Daily user fee
Birds (including zoo birds, but excluding ratites and pet birds imported in accordance with Part 92 of this subchapter):	
0–250 grams	$1.00
251–1,000 grams	3.25
Over 1,000 grams, and any bird in nonstandard housing or receiving nonstandard care and handling	7.50
Ratites:	
Chicks (less than 3 months of age)	5.75
Juveniles (3 months through 10 months of age)	8.00
Adults (11 months of age and older)	16.25
Poultry (including zoo poultry):	
A. Doves, pigeons, quail	2.00
B. Chickens, ducks, grouse, guinea fowl, partridge, pea fowl, pheasants	3.50
C. Game cocks, geese, swans, turkeys, any poultry housed in nonstandard housing or receiving nonstandard care and handling	8.25
Equines (including zoo equines, but excluding miniature horses):	
1st through 3rd day	149.50
4th through 7th day	108.25
8th and later days	91.75
Miniature horses	40.25
Zoo animals (except equines, birds, and poultry)	32.25
Domestic animals:	
Camels, cattle, bison, buffalo	56.50
All others	15.00

* * * * *

4. Section 130.3 would be amended as follows:

a. In paragraph (a)(1), by revising the table to read as set forth below.

b. By revising paragraph (a)(3) to read as set forth below.

§ 130.3 User fees for exclusive use of space at APHIS Animal Import Centers.

(a)(1) * * *

Animal import center	Space available	Monthly user fee
Miami, Fl:		
South Wing.	6,952 sq. ft. (645.9 sq.m.).	$30,285.00
North Wing.	6,545 sq. ft. (608.1 sq.m.).	$29,377.00
Newburgh, NY:		
Space A	5,904 sq. ft. (548.5 sq.m.).	$47,609.00
Space B	9,742 sq. ft. (905 sq.m.).	$78,555.00

* * * * *

(c) * * *

(3) If the importer chooses to pay for additional services on an hourly basis, the user fees for each employee required to perform the service are:

(i) $56.00 per hour;

(ii) $14.00 per quarter-hour;

(iii) With a minimum of $16.50.

* * * * *

5. Section 130.4 would be amended as follows:

a. By designating the introductory paragraph as paragraph (a).

b. By adding a new paragraph (b) to read as set forth below.

§ 130.4 User fees for services at privately operated permanent import-quarantine facilities.

* * * * *

(b) If a service must be conducted on a Sunday or holiday or at any other time outside the normal tour of duty of the employee, then reimbursable overtime, as provided for in 9 CFR part 97, must be paid for each service, in addition to the user fee listed in this section.

6. Section 130.5 would be amended as follows:

a. In paragraph (b)(1), by removing ''$50.00'' and adding ''$56.00'' in its place.

b. In paragraph (b)(2), by removing ''$12.50'' and adding ''$14.00'' in its place.

c. In paragraph (b)(3), by removing ''$16.00'' and adding ''$16.50'' in its place.

d. By adding a new paragraph (c) to read as set forth below.

§ 130.5 User fees for services at privately operated temporary import-quarantine facilities.

* * * * *

(c) If a service must be conducted on a Sunday or holiday or at any other time outside the normal tour of duty of the employee, then the premium user fee rate, in lieu of the user fee listed in paragraph (b) of this section, must be paid for each employee required to perform each service:

(1) $65.00 per hour for weekdays and holidays; and

(2) $74.00 per hour for Sundays.

7. Section 130.6 would be amended as follows:

a. In paragraph (a), by removing the figure ''$16.00'' and adding ''$16.50'' in its place.

b. In paragraph (a), by removing the phrase ''live animals imported into or entering the United States'' and adding ''live animals presented for importation into or entry into the United States'' in its place.

c. In paragraph (a), by revising the table to read as set forth below.

§ 130.6 User fees for import or entry services for live animals at land border ports along the United States-Mexico border.

(a) * * *

Type of live animal	User fee (per head)
Feeder	$1.75
Slaughter	2.50
Horses, other than slaughter	29.25
In-bond or in transit	3.75
Any ruminants not covered above	6.00

* * * * *

8. Section 130.7 would be amended as follows:

a. In paragraph (a), by removing the figure ''$16.00'' and adding ''$16.50'' in its place.

b. In paragraph (a), by removing the phrase ''live animals imported into or entering the United States'' and adding ''live animals presented for importation into or entry into the United States'' in its place.

c. In paragraph (a), by revising the table to read as set forth below:

§ 130.7 User fees for import or entry services for live animals at all other ports of entry.

(a) * * *

Type of live animal	User fee
Animals being imported into the United States:	
Horses, other than slaughter and in transit horses.	$19.00 per head
Breeding animals, except horses—Grade animals:	
Swine	0.50 per head
Sheep and goats	0.50 per head
All others	2.25 per head
Registered animals, all types	4.00 per head
Feeder animals:	
Cattle (not including calves)	1.00 per head
Swine	0.50 per head
Sheep and calves	0.25 per head
Slaughter animals, all types	16.50 per load
Poultry (including eggs), imported for any purpose	33.00 per load
Animals transiting [1] the United States:	
Cattle	1.00 per head
Swine	0.25 per head
Sheep and goats	0.025 per head
Horses and all other animals	4.50 per head

[1] The user fee in this section will be charged for services provided to in-bond animals or animals transiting the United States, at the actual port of entry. For example, if the official port of entry is Guam, but the animals are actually provided import or entry services in Alaska, the user fee will be charged for services provided in Alaska. The hourly user fee will be charged for services provided at the port where the animals leave the United States.

* * * * *

9. In § 130.8, paragraph (a), by revising the table and adding a footnote at the end of the table to read as follows:

§ 130.8 User fees for other services.

(a) * * *

Service	User fee
Inspection for approval of slaughter establishment:	
Initial approval	$246.50 for all inspections required during year.
Renewal	213.50 for all inspections required during year.
Pet birds, except pet birds of U.S. origin entering the United States from Canada:	
Which have been out of United States more than 60 days	169.75 per lot.

Service	User fee
Which have been out of United States 60 days or less	71.25 per lot.
Germ Plasm—Being imported:[1]	
Semen	39.50 per load.
Embryo	39.50 per load.
Being exported:[2]	
Semen	33.50 per certificate.
Embryo (up to 5 donor pairs)	54.75 per certificate.
Embryo (each additional group of donor pairs, up to 5 pairs per group)	24.75 per group of donor pairs.
Processing VS form 16–3, ''Application for Permit to Import Controlled Material/Import or Transport Organisms or Vectors'':	
For permit to import fetal bovine serum when facility inspection is required	208.50 per application.
For all other permits	27.50 per application.
Amended application	11.50 per amended application.
Application renewal	15.00 per application.
Fetal Bovine Serum sample verification	666.00 per verification.
Import compliance assistance	24.00 per release.
Release from export agricultural hold	24.00 per release.
Inspection of approved establishments, warehouses, and facilities under 9 CFR parts 94 through 96:	
Approval (Compliance Agreement)	262.75 for first year of 3-year approval (for all inspections required during the year).
Renewed approval	152.00 per year for second and third years of 3-year approval (for all inspections required during the year).

[1] For inspection of empty containers being imported into the United States, the applicable hourly user fee would apply.
[2] This user fee includes a single inspection and resealing of the container. Each subsequent inspection and resealing requires the payment of an additional user fee.

* * * * *

10. Section 130.9 would be amended as follows:

a. In paragraph (a) introductory text, by removing the figure ''$50.00'' and adding ''$56.00'' in its place, and by removing the figure ''$12.50'' and adding ''$14.00'' in its place.

b. In paragraph (a) introductory text, by removing the figure ''$16.00'' and adding ''$16.50, for each employee required to perform the service'' in its place.

c. By revising paragraph (b) to read as set forth below.

§ 130.9 User fees for miscellaneous import or entry services.

* * * * *

(b) If a service must be conducted on a Sunday or holiday or at any other time outside the normal tour of duty of the employee, then the premium user fee rate, in lieu of the user fee listed in paragraph (a) of this section, must be paid for each employee required to perform each service:

(1) $65.00 per hour for weekdays and holidays; and

(2) $74.00 per hour for Sundays.

11. Section 130.10 would be added to read as follows:

§ 130.10 User fees for pet birds quarantined at APHIS-owned or supervised quarantine facilities.

(a) The person for whom the service is provided and the person requesting the service are jointly and severally liable for the following user fees, which include standard care, feed, and handling, and which must be paid for each animal or bird quarantined in an Animal Import Center.[7]

Number of birds in isolette	Daily Fee
1	$6.50
2	7.75
3	9.25
4	10.75
5	12.00

(b) Based on the information provided to APHIS personnel, APHIS personnel at the Animal Import Center or other APHIS owned or supervised quarantine facility will determine the appropriate number of birds that should be housed per isolette.

(c) If the person or persons for whom the service is provided or the person or persons requesting the service request additional services on an hourly basis, the user fees for each employee required to perform the service are:

(1) $56.00 per hour; and

(2) $14.00 per quarter-hour;

(3) With a minimum of $16.50.

12. Section 130.14 would be amended as follows:

a. By revising the section heading to read as set forth below.

b. In paragraph (a), after the term ''NVSL'', by adding the phrase ''or at authorized import sites (excluding FADDL)''.

[7] See footnote 5 to § 130.2(a).

c. In paragraph (a), by revising footnote 1 to the table to read as set forth below.

d. By adding a new paragraph (c) to read as set forth below.

§ 130.14 User fees for tests performed by the NVSL or at authorized import sites (excluding FADDL).

(a) * * *

[1] Because tests with multiple and subsequent antigens can be set up for a fraction of the cost of a single-antigen test, tests subsequent to the first antigen used for these assays are reduced down to 20% of the cost of using the first antigen. The following are examples of these cost savings: complement fixation (CF) tests for equine encephalomyelitis or vesicular stomatitis; hemagglutination inhibition (HI) for equine encephalomyelitis or equine influenza; virus neutralization (VN) tests for porcine respiratory and reproductive syndrome. For example, for CF tests for eastern equine encephalomyelitis (EEE), western equine encephalomyelitis (WEE), and Venezuelan equine encephalomyelitis (VEE) and for VN tests for the New Jersey and Indiana serovars of vesicular stomatitis (VS), the costs are as follows: EEE—$9.00, WEE and VEE—$2.00 each; VS New Jersey—$7.50, VS Indiana—$1.50. The total of these five assays is $22.00 for each specimen submitted.

* * * * *

(c) The user fees in this section do not include any costs that may be incurred due to special mail handling, such as express, overnight, or foreign mailing. If a test requires special mail handling, all costs incurred must be paid by the user as specified in paragraph (a) of this section, in addition to the user fee listed in paragraph (a) of this section.

13. Section 130.15 would be amended as follows:

a. In paragraph (a), by revising footnote 1 to the table to read as set forth below.

b. By adding a new paragraph (c) to read as set forth below.

§ 130.15 User fees for tests performed at FADDL.

(a) * * *

[1] Because tests with multiple and subsequent antigens can be set up for a fraction of the cost of a single-antigen test, tests subsequent to the first antigen used for these assays are reduced down to 20% of the cost of using the first antigen. The following assays are examples of these cost savings: complement fixation (CF) tests for foot-and-mouth disease or vesicular stomatitis; virus neutralization (VN) tests for foot-and-mouth disease or vesicular stomatitis. For example, for CF and VN tests for foot-and-mouth disease A, O, and C antigens, the costs are as follows: CF A antigen—$30.50, O antigen—$6.25, and C antigen—$6.25; VN A antigen—$22.00, O antigen—$4.50, and C antigen—$4.50. The total of these six assays is $74.00 for each specimen tested for these agents.

* * * * *

(c) The user fees in this section do not include any costs that may be incurred due to special mail handling, such as express, overnight, or foreign mailing. If a test requires special mail handling, all costs incurred must be paid by the user as specified in paragraph (a) of this section in addition to the user fee listed in paragraph (a) of this section.

14. Section 130.16 would be amended as follows:

a. In paragraph (a), in the table, by revising the entry for ''Virus isolation'' and by adding a new test in alphabetical order to read as set forth below.

b. By adding a new paragraph (c) to read as set forth below.

§ 130.16 User fees for reference assistance testing.

(a) * * *

Test	User fee
* * * * *	
(3) Other tests:	
* * * * *	
Virus isolation (except Newcastle disease virus)	$29.75
Virus isolation for Newcastle disease virus	14.00

* * * * *

(c) The user fees in this section do not include any costs that may be incurred due to special mail handling, such as express, overnight, or foreign mailing. If a test requires special mail handling, all costs incurred must be paid by the user as specified in paragraph (a) of this section in addition to the user fee listed in paragraph (a) of this section.

15. Section 130.17 would be amended as follows:

a. In paragraph (a), in the table, in the entry for Johnin: OT, under the Unit (ml.) column, by removing the numeral ''10'' and adding ''2'' in its place.

b. By adding a new paragraph (c) to read as set forth below.

§ 130.17 User fees for diagnostic reagents, slide sets, and tissue sets.

* * * * *

(c) The user fees in this section do not include any costs that may be incurred due to special mail handling, such as express, overnight, or foreign mailing. If a test requires special mail handling, all costs incurred must be paid by the user as specified in paragraph (a) of this section in addition to the user fee listed in paragraph (a) of this section.

16. Section 130.18 would be amended as follows:

a. By redesignating the existing text as paragraph (a).

b. By adding a new paragraph (b) to read as set forth below.

§ 130.18 User fees for sterilization by gamma radiation.

(a) * * *

(b) The user fees in this section do not include any costs that may be incurred due to special mail handling, such as express, overnight, or foreign mailing. If a test requires special mail handling, all costs incurred must be paid by the user as specified in paragraph (a) of this section in addition to the user fee listed in paragraph (a) of this section.

17. Section 130.20 would be amended as follows:

a. In paragraph (a), by redesignating footnote 7 as footnote 8, and by revising the table to read as set forth below.

b. In paragraph (b)(1), by revising the table to read as set forth below.

c. In paragraph (c), by removing the words ''it is endorsed'' and by adding the phrase ''the export health certificate is prepared for endorsement completely at the site of the inspection'' in their place.

d. In paragraph (c), by removing the reference ''§ 130.7'' and adding ''§ 130.21'' in its place.

e. By redesignating paragraph (d) as paragraph (e) and adding a new paragraph (d) to read as set forth below.

§ 130.20 User fees for endorsing export health certificates.

(a) * * *

Certificate categories	User fee
Slaughter animals, of any type, moving to	$24.50
Canada or Mexico	.....
Nonslaughter horses to Canada	26.25
Poultry	21.00
Hatching eggs	21.00
Animal products	21.50
Other endorsements or certifications	16.50

(b)(1) * * *

Number of tests/vaccinations required	Number of animals on certificate	Fee
1–2	First animal	$52.50
	Each additional animal.	3.00
3–6	First animal	64.75
	Each additional animal.	5.00
7 or more	First animal	75.75
	Each additional animal.	6.00

* * * * *

(d) The user fees prescribed in this section will not apply if a requested export health certificate is not endorsed by an APHIS veterinarian. The minimum user fee of $16.50 will be charged for each export health certificate that is requested but not endorsed.

18. Section 130.21 would be amended as follows:

a. By revising paragraphs (a)(1) through (a)(5) to read as set forth below.

b. By adding new paragraphs (a)(6) and (a)(7) to read as set forth below.

c. In paragraph (b), before the colon, by adding the phrase ''charged per each employee required to perform the service''.

d. In paragraph (b)(1), by removing the figure $50.00 and adding ''$56.00'' in its place.

e. In paragraph (b)(2), by removing the figure ''$12.50'' and adding ''$14.00'' in its place.

f. In paragraph (b)(3), by removing the figure ''$16.00'' and adding ''$16.50'' in its place.

g. By revising paragraph (c) to read as set forth below.

§ 130.21 User fees for inspection and supervision services provided within the United States for export animals, birds, and animal products and byproducts.

(a) * * *

(1) Inspecting an export isolation facility and animals in it;

(2) Supervising animal or bird rest periods prior to export;

(3) Supervising loading or unloading of animals or birds for export shipment;

(4) Inspecting means of conveyance used to export animals or birds;

(5) Conducting inspections under authority of part 156 of this chapter;

(6) Approving or inspecting an embryo or semen collection center or the animals in it; and

(7) Other export or embarkation services not specified elsewhere in this part.

* * * * *

(c) If a service must be conducted on a Sunday or holiday or at any other time outside the normal tour of duty of the employee, then the premium user fee rate, in lieu of the user fee listed in paragraph (b) of this section, must be paid for each employee required to perform each service:

(1) $65.00 per hour for weekdays and holidays; and

(2) $74.00 per hour for Sundays.

19. Section 130.50 would be amended as follows:

a. In paragraph (b)(1), by redesignating footnote 8 as footnote 9 and revising it to read as set forth below.

b. In paragraph (b)(2), at the end of the sentence, by adding ''drawn on a U.S. bank in U.S. dollars and made payable to the U.S. Department of Agriculture or USDA''.

c. In paragraph (b)(3), immediately before the word ''or'', by adding ''drawn on a U.S. bank in U.S. dollars and made payable to the U.S. Department of Agriculture or USDA''.

d. By revising paragraph (b)(4) to read as set forth below. § 130.50 Payment of user fees.

* * * * *

(b) * * *

(4) Credit cards (VISA [*Insert trademark symbol*] or MasterCard [*Insert trademark symbol*]) if payment is made at an Animal Import Center or an APHIS office that is equipped to process credit cards.[9]

* * * * *

Done in Washington, DC, this 22nd day of May 1995.

Terry L. Medley,

Acting Administrator, Animal and Plant Health Inspection Service.

[FR Doc. 95–12999 Filed 5–25–95; 8:45 am]

BILLING CODE 3410–34–P

[9] A list of Animal Import Centers and APHIS offices that accept credit cards may be obtained from the Animal and Plant Health Inspection Service, Veterinary Services, National Center for Import and Export, 4700 River Road Unit 38, Riverdale, MD 20737–1231.

SMALL BUSINESS ADMINISTRATION

13 CFR Part 121

Small Business Size Regulations; Non-Manufacturer Rule

AGENCY: Small Business Administration.

ACTION: Proposed rule.

SUMMARY: The Small Business Administration (SBA) proposes to amend its size regulations to require that small business non-manufacturers provide the product of a small business manufacturer on small business set-aside contracts or section 8(a) contracts, regardless of the dollar value of the contract. Under certain conditions, a waiver of this requirement may be granted by the SBA.

DATES: Comments must be submitted on or before July 25, 1995.

ADDRESSES: Send comments to: Gene VanArsdale, Acting Assistant Administrator for Procurement Policy and Liaison, U.S. Small Business Administration, 409 Third Street, SW, Mail Code 6252, Washington, DC 20416.

FOR FURTHER INFORMATION CONTACT: Gary M. Jackson, Assistant Administrator for Size Standards, (202) 205–6618.

SUPPLEMENTARY INFORMATION: In order to qualify as small for purposes of a small business set aside or section 8(a) procurement of manufactured or processed products, the Small Business Act (15 U.S.C. 637(a)(17)) and SBA's implementing size regulations (13 CFR 121.906 and 121.1106) require non-manufacturers to provide the product of a domestic small business manufacturer. An offeror which is not the manufacturer (1) must itself be a small business concern, *and* (2) must also supply a product manufactured by a domestic small business concern. This requirement is commonly referred to as SBA's ''non-manufacturer rule.'' Compliance with the non-manufacturer rule has been a long-standing regulatory requirement for the small business set-aside and 8(a) programs, and a part of the Small Business Act since 1988. Pursuant to the Act, the non-manufacturer rule may be waived by the SBA if SBA determines that no small business manufacturer can reasonably be expected to offer a project meeting the specifications required by the solicitation, or if SBA determines that no small business manufacturer is available to participate in the Federal market. Under the SBA's existing size regulations, the non-manufacturer rule has not been extended to supply contracts processed under ''Small Purchase Procedures.''

Recent legislation, however, has rescinded the Small Purchase Procedures. Thus, the exemption to the non-manufacturer rule for procurements processed under those procedures no longer exists. This action was part of the Federal Acquisition Streamlining Act of 1994 (FASA) that was signed into law on October 13, 1994. Among its many changes, FASA requires that simplified acquisition procedures be developed for contracts between $2,500 and $100,000, and that all contracts between $2,500 and $100,000 be reserved exclusively for small concerns unless the contracting officer is unable to obtain offers from at least two small business concerns that are competitive in price and quality.

The SBA is proposing to apply the nonmanufacturer rule to supply contracts that are reserved for small business (i.e., set aside for small business or reserved for the 8(a) program) regardless of the dollar value of the contract. This policy, adopted, would consistently apply the non-manufacturer rule to small business set-aside and 8(a) contracts for supplies issued under all procurement methods, including those processed under the new Simplified Acquisition Procedures. The SBA believes that this rule would further the overall purpose of the FASA, which is to simplify Federal procurement procedures. Applying different rules according to dollar value of contracts would further complicate the procurement process. The impact of this proposed rule would effectively be limited to those procurements ranging in value between $2,500 and $25,000 that were previously exempt from the non-manufacturer rule as procurements processed under Small Purchases Procedures. (Note: Procurements of $2,500 and below will be processed under new micro-purchase procedures and will not be reserved for small business competition. Thus, the proposed rule would not apply.)

The SBA does not believe an exception to the non-manufacturer rule based on the dollar value of contract is needed. Public Law 100–656 amended the Small Business Act by statutorily requiring the non-manufacturer rule. As indicated above, the legislation also included a provision granting SBA the authority to waive the nonmanufacturer rule when (1) there is *no* small business manufacturer for that particular class of products in the federal market (class waiver); or when (2) there is *no* small business manufacturer which can meet the specifications of a particular contract (individual waiver). The waiver provision addresses those situations where the application of the nonmanufacturer rule is inappropriate due to the absence of small business manufacturers in the Federal market. By way of illustration, examples of waivers to the non-manufacturer rule are described by the two following cases.

1. *Example of class waiver.* There are no small business manufacturers of four-wheel drive utility trucks.

Therefore, the SBA has issued a waiver to the nonmanufacturer rule for this class of product. Because there is no small business manufacturer in the Federal market, a small business offeror may provide a product of a large business manufacturer of four-wheel drive trucks on contracts set aside for small businesses.

2. *Example of an individual waiver.* There are occasional instances when the government requires a brand-name product. For example, a government office may need to purchase computers which are compatible with computers already used in that office. If there is no compatible unit manufactured by a small business concern in the Federal market, the SBA may grant an individual waiver at the request of the contracting officer so that a small business offeror may provide a product manufactured by a large business for that particular procurement even though set aside for small businesses.

The SBA believes that the implementation of the non-manufacturer rule contained in this proposed rule is the application which will best assist small business, minimize complexity for procurement, and most clearly comply with the congressional purposes of the Small Business Act. This proposed rule would ensure that, on procurements reserved for small business, a substantial value of the contract is performed by a small business. Absent the non-manufacturer rule, a small business non-manufacturer can obtain a small business contract and, in turn, provide a product produced by a large business manufacturer. In that case, the benefits to small business of such an award are limited to the mark-up of the small business non-manufacturer or dealer. On the other hand, when a small business provides the product, directly or through a dealer, most of the value of the contract is realized by a small business. This fosters increased employment and growth for small business manufacturers in the economy.

The SBA notes that the Federal government's implementation of electronic commerce will make it easier for small business manufacturers to enter into the government procurement arena. Through electronic commerce, they will be able to identify Federal contracting opportunities and become potential sources for Federal agencies and small business dealers. Requiring small business products on all set-aside and 8(a) contracts will help such manufacturers do a larger amount of business in the federal procurement arena.

Alternative Approaches

The SBA considered two alternatives with regard to application of the non-manufacturer rule to small business set-aside or 8(a) contracts that will be processed under the Simplified Acquisition Procedures:

(1) A rule that would not apply the non-manufacturer rule to small business set-aside and 8(a) contracts of $100,000 or less, and

(2) A rule that would not apply the non-manufacturer rule to small business set-aside and 8(a) contracts of $25,000 or less.

Each of these approaches has advantages and disadvantages which are discussed below.

The first alternative, which would not apply the non-manufacturer rule to supply contracts on ''Simplified Acquisition Procedures'' until the simplified acquisition threshold of $100,000, would expand the number of contracts in which a small business non-manufacturer or dealer could supply the product of any domestic manufacturer large or small. Existing rules exempt from the non-manufacturer rule only those contracts which are $25,000 or less in value, and which are processed under ''Small Purchases Procedures.'' Under the first alternative, small business set-aside and 8(a) contracts of between $25,000 and $100,000, would no longer be subject to the nonmanufacturer rule.

This approach would appear to be consistent with a major purpose of the FASA, which is to simplify the formal procurement process. It would simplify procurement procedures on relatively low dollar value contracts and would facilitate the evaluation and award of these contracts (since the small business status of a subcontractor to a small offeror would no longer be relevant).

The SBA is concerned, however, that this alternative might have an adverse impact on small business manufacturers. Without the non-manufacturer rule, large manufacturers could simply supply their products to the government indirectly (through small business offerors that won the contract). Small manufacturers would then, in effect, be competing with large manufacturers on a large number of contracts ostensibly reserved for small business. Based on contract award data between fiscal years 1989 and 1993, the SBA estimates that over $500 million has been awarded annually to small manufacturers on small business set-aside and 8(a), contracts ranging in size between $25,000 and $100,000. A failure to apply the non-manufacturer rule to these contracts would cause a shift in contract revenues from small manufacturers to large manufacturers that is likely to be well into the multi-million dollar range. As a consequence, SBA elected not to propose this approach.

The second alternative is to not apply the non-manufacturer rule to small business set-aside and 8(a) contracts of $25,000 or less—the level of the former Small Business Purchase threshold. However, under this approach, all other small business set-aside and 8(a) contracts, including those processed under the new Simplified Acquisition Procedures, would be subject to the non-manufacturer rule (unless an administrative waiver were issued for the class of product or for specific procurement). This alternative would, in effect, maintain the current application of the non-manufacturer rule to small business set-aside procurements notwithstanding enactment of FASA.

Under this approach, small business manufacturers would not be subject to new competition from large business (as could occur under the first alternative approach) and small business offerors would continue to have contract opportunities below $25,000 exempt from the rule so they could supply the product of a large manufacturer. In addition, a new procurement requirement would not be added to smaller-sized procurements of up to $100,000 at a time when the Federal government is attempting to streamline all procurement procedures.

The disadvantage of this approach is that it would add unnecessary complexity to the new Simplified Acquisition Procedures. A contracting officer would have different requirements to follow depending upon whether the value of a contract exceeded $25,000 or not. This would undercut the overall purpose of FASA, which is to simplify the procurement process.

The SBA believes a uniform approach with regard to the application of the non-manufacturer rule to small business set-aside contracts is more in-line with the spirit of the procurement reform legislation. In this regard, it believes the proposed rule provides the best level of assistance to small businesses, especially for small business manufacturers.

The SBA welcomes public comments on the proposed rule, and will continue its evaluation of all of the alternative approaches to application of the non-manufacturer rule. Comments on any alternative to the proposal, including those discussed above, should present the reasons why it is preferable to the

proposal, and should address the following concerns: (1) The interaction between SBA programs and the procurement process, including the various statutory authorities impacting this process; (2) the effect on small business participation; and (3) the prospects for significant new entrants into the Federal procurement market.

Compliance With Executive Orders 12866, 12778 and 12612, the Regulatory Flexibility Act (5 U.S.C. 601, et seq.), and the Paperwork Reduction Act (44 U.S.C. Chap. 35)

The SBA believes that this proposed rule, if finalized, would have a significant impact on a substantial number of small entities within the meaning of the Regulatory Flexibility Act, 5 U.S.C. 601, *et seq*. In addition, this rule constitutes a significant rule for the purpose of Executive Order 12866. A regulatory flexibility analysis follows:

(1) Description of Entities to Which This Rule Applies

With eleven million small purchase contract actions during FY 1993, the SBA estimates that tens of thousands of small manufacturers active in Federal contracting potentially could be impacted by this rule. In addition, thousands of non-manufacturers or dealers providing manufactured products under small purchase procedures could be impacted by this rule since their product mix and small business status could be affected.

(2) Description of Potential Benefits of This Rule

A decision to apply the non-manufacturer rule to supply contracts in the $2,500 to $25,000 range of contract size would have an estimated impact on small business participation in excess of $100 million. During FY 1993, $7.9 billion was awarded to small business concerns under small purchase procedures. Although available data would not permit the SBA to determine the extent to which Federal agencies utilize small business non-manufacturers to satisfy contracts awarded as small purchases, or to identify which contracts are in the $2,500 to $25,000 range affected by this rule, the magnitude of the $7.9 billion figure suggests that a decision to apply the non-manufacturer rule waiver to small business procurements in this dollar range would likely have an annual small business impact exceeding $100 million.

(3) Description of the Potential Costs of This Rule

The SBA believes the procurement costs to the Federal government would be minimal. All set-aside and 8(a) contracts are expected to be awarded at no more than fair-market value. If reasonable pricing does not exist, the procuring agency should issue an unrestricted solicitation. There should be no significant increased costs to the government.

(4) Description of the Potential Net Benefits of the Rule

If the proposed rule is adopted, the SBA estimates that tens of thousands of small manufacturers would provide the products that formerly have been provided by large manufacturers. At a minimal cost to the government, small business participation in the Federal market would likely be increased. The direct impact would be entirely concentrated in the area of Federal procurement.

(5) Legal Basis for This Rule

The legal basis for this rule is sections 3(a), 5(a), 8(a), and 15(a) of the Small Business Act, 15 U.S.C. 632(a), 634(b)(6), 637(a) and 644(a).

(6) Federal Rules

There are no Federal rules which duplicate, overlap or conflict with this proposed rule. The SBA has been given exclusive statutory jurisdiction in establishing size standards.

(7) Significant Alternatives to This Rule

In compliance with the Regulatory Flexibility Act, the SBA has examined alternatives to the proposed application of the non-manufacturer rule. These are discussed in the supplementary information. The public is invited to comment on the proposed rule and alternative approaches to assist the SBA in developing a final rule.

For purpose of the Paperwork Reduction Act, 44 U.S.C. Ch. 35, SBA certifies that this rule contains no new reporting or recordkeeping requirements.

For purposes of Executive Order 12612, SBA certifies that this rule does not have any federalism implications warranting the preparation of a Federalism Assessment.

For the reasons set forth above, Title 13, Code of Federal Regulations (CFR), is amended as set forth below.

PART 121—[AMENDED]

1. The authority citation for 13 CFR Part 121 continues to read as follows:

Authority: 15 U.S.C. 632(a), 634(b)(6), 637(a), 644(c); and Pub. L. 102–486, 106 Stat. 2776, 3133.

§ 121.906 [Amended]

2. Section 121.906(d) is removed.

Dated: April 19, 1995.

Philip Lader,

Administrator.

[FR Doc. 95–12646 Filed 5–25–95; 8:45 am]

BILLING CODE 8025–01–M

DEPARTMENT OF TRANSPORTATION

Federal Aviation Administration

14 CFR Part 39

[Docket No. 95–SW–06–AD]

Airworthiness Directives; Robinson Helicopter Company Model R22 Series Helicopters

AGENCY: Federal Aviation Administration, DOT.

ACTION: Notice of proposed rulemaking (NPRM).

SUMMARY: This document proposes the supersedure of an existing airworthiness directive (AD), applicable to Robinson Helicopter Company Model R22 series helicopters, that currently requires an inspection and repetitive visual checks for slippage of the tail rotor (T/R) drive and replacement of the T/R gearbox, if necessary. This action would require disassembly of the T/R gearbox to verify the installation of the input and output shaft keys (keys) between the input and output pinions and their respective shafts. This proposal is prompted by two incidents in which the key was not installed between the output shaft and the output pinion during assembly of the T/R gearbox at Robinson Helicopter Company. The actions specified by the proposed AD are intended to prevent slippage of the T/R drive, loss of directional control, and subsequent loss of control of the helicopter.

DATES: Comments must be received by July 25, 1995.

ADDRESSES: Submit comments in triplicate to the Federal Aviation Administration (FAA), Office of the Assistant Chief Counsel, Attention: Rules Docket No. 95–SW–06–AD, 2601 Meacham Blvd., Room 663, Fort Worth, Texas 76137. Comments may be inspected at this location between 9:00 a.m. and 3:00 p.m., Monday through Friday, except Federal holidays.

FOR FURTHER INFORMATION CONTACT: Ms. Elizabeth Bumann, Aerospace Engineer, FAA, Los Angeles Aircraft Certification Office, 3960 Paramount Blvd.,

Lakewood, California 90712, telephone (310) 627–5265, fax (310) 627–5210.

SUPPLEMENTARY INFORMATION:

Comments Invited

Interested persons are invited to participate in the making of the proposed rule by submitting such written data, views, or arguments as they may desire. Communications should identify the Rules Docket number and be submitted in triplicate to the address specified above. All communications received on or before the closing date for comments, specified above, will be considered before taking action on the proposed rule. The proposals contained in this notice may be changed in light of the comments received.

Comments are specifically invited on the overall regulatory, economic, environmental, and energy aspects of the proposed rule. All comments submitted will be available, both before and after the closing date for comments, in the Rules Docket for examination by interested persons. A report summarizing each FAA-public contact concerned with the substance of this proposal will be filed in the Rules Docket.

Commenters wishing the FAA to acknowledge receipt of their comments submitted in response to this notice must submit a self-addressed, stamped postcard on which the following statement is made: ''Comments to Docket No. 95–SW–06–AD.'' The postcard will be date stamped and returned to the commenter.

Availability of NPRMs

Any person may obtain a copy of this NPRM by submitting a request to the FAA, Office of the Assistant Chief Counsel, Attention: Rules Docket No. 95–SW–06–AD, 2601 Meacham Blvd., Room 663, Fort Worth, Texas 76137.

Discussion

On August 25, 1994, the FAA issued priority letter AD 94–17–07, applicable to Robinson Helicopter Company Model R22 series helicopters, to require an inspection and repetitive visual checks for slippage of the T/R drive and replacement of the T/R gearbox, if necessary. On October 24, 1994, the FAA issued the final rule of the priority letter, AD 94–17–07, Amendment 39–9059 (59 FR 55203, November 4, 1994). Those actions were prompted by two incidents in which the key was not installed between the output shaft and the output pinion during assembly of the T/R gearbox. The key is required to prevent the output gear from rotating on the output shaft. Both incidents resulted in slippage of the T/R drive. The requirements of that AD are intended to prevent slippage of the T/R drive, loss of directional control, and subsequent loss of control of the helicopter. Owner/operator daily preflight checks for misalignment of the alignment dots that are installed on the tail cone skin and the drive shaft flange are allowed. These owner/operator checks do not require the use of tools, precision measuring equipment, training, pilot logbook endorsements, or the use of technical data not contained in the AD. Additionally, these owner/operator checks are considered part of the normal pilot ''Before Takeoff'' and ''After Landing'' checks. These owner/operator checks are additional measures to prevent slippage of the T/R drive until the installation of the keys is verified. These checks may be performed by an owner/operator holding at least a private pilot certificate, but must be entered into the aircraft records showing compliance with this AD in accordance with sections 43.11 and 91.417 (a)(2)(v) of the Federal Aviation Regulations.

Since the issuance of that AD, the FAA has determined that the required terminating action to AD 94–17–07 is verification of the presence of both keys through disassembly and reassembly of the T/R gearbox in accordance with the procedures contained in this notice, or other FAA-approved procedures.

Since an unsafe condition has been identified that is likely to exist or develop on other Robinson Helicopter Company Model R22 series helicopters of the same type design, the proposed AD would supersede AD 94–17–07 to require disassembly of the T/R gearbox to verify the installation of the key between the input and output pinions and their respective shafts.

The FAA estimates that 500 helicopters of U.S. registry would be affected by this proposed AD, that it would take approximately 5 work hours per helicopter to accomplish the proposed actions, and that the average labor rate is $60 per work hour. Based on these figures, the total cost impact of the proposed AD on U.S. operators is estimated to be $150,000.

The regulations proposed herein would not have substantial direct effects on the States, on the relationship between the national government and the States, or on the distribution of power and responsibilities among the various levels of government. Therefore, in accordance with Executive Order 12612, it is determined that this proposal would not have sufficient federalism implications to warrant the preparation of a Federalism Assessment.

For the reasons discussed above, I certify that this proposed regulation (1) Is not a ''significant regulatory action'' under Executive Order 12866; (2) is not a ''significant rule'' under the DOT Regulatory Policies and Procedures (44 FR 11034, February 26, 1979); and (3) if promulgated, will not have a significant economic impact, positive or negative, on a substantial number of small entities under the criteria of the Regulatory Flexibility Act. A copy of the draft regulatory evaluation prepared for this action is contained in the Rules Docket. A copy of it may be obtained by contacting the Rules Docket at the location provided under the caption **ADDRESSES**.

List of Subjects in 14 CFR Part 39

Air transportation, Aircraft, Aviation safety, Safety.

The Proposed Amendment

Accordingly, pursuant to the authority delegated to me by the Administrator, the Federal Aviation Administration proposes to amend part 39 of the Federal Aviation Regulations (14 CFR part 39) as follows:

PART 39—AIRWORTHINESS DIRECTIVES

1. The authority citation for part 39 continues to read as follows:

Authority: 49 U.S.C. App. 1354(a), 1421 and 1423; 49 U.S.C. 106(g); and 14 CFR 11.89.

§ 39.13 [Amended]

2. Section 39.13 is amended by removing Amendment 39–9059 (59 FR 55203, November 4, 1994), and by adding a new airworthiness directive (AD), to read as follows:

Robinson Helicopter Company: Docket No. 95–SW–06–AD. Supersedes AD 94–17–07, Amendment 39–9059.

Applicability: Model R22 series helicopters, certificated in any category with tail rotor (T/R) gearboxes that were manufactured or overhauled by Robinson Helicopter Company prior to June 8, 1992. The following gearbox serial numbers have been determined to have the T/R input and output shaft keys installed and are therefore exempt from this AD: 0012, 0013, 0014, 0020, 0021, 0040, 0054, 0062, 0091, 0095, 0098, 0108, 0121, 0134, 0137, 0153, 0169, 0179, 0185, 0191, 0201, 0205, 0227, 0228, 0235, 0248, 0258, 0262, 0272, 0277, 0280, 0321, 0333, 0342, 0365, 0432, 0439, 0444, 0503, 0504, 0525, 0548, 0558, 0559, 0565, 0574, 0576, 0592, 0594, 0597, 0603, 0604, 0605, 0615, 0632, 0641, 0644, 0650, 0656, 0662, 0663, 0674, 0686, 0689, 0696, 0697, 0700, 0702, 0707, 0722, 0734, 0735, 0736, 0742, 0759, 0767, 0777, 0778, 0805, 0832, 0836, 0839, 0842, 0850, 0862, 0866, 0868, 0887, 0892, 0937, 0939, 0983, 0986, 0996, 0998,

1018, 1021, 1029, 1030, 1035, 1072, 1081, 1087, 1104, 1116, 1121, 1126, 1129, 1132, 1141, 1151, 1176, 1186, 1187, 1199, 1205, 1208, 1217, 1222, 1228, 1233, 1245, 1249, 1269, 1274, 1290, 1293, 1299, 1301, 1307, 1311, 1323, 1330, 1333, 1339, 1341, 1350, 1361, 1379, 1385, 1388, 1392, 1404, 1412, 1428, 1438, 1442, 1450, 1460, 1468, 1494, 1499, 1505, 1509, 1512, 1514, 1526, 1541, 1544, 1578, 1586, 1593, 1595, 1597, 1605, 1610, 1627, 1628, 1636, 1643, 1647, 1648, 1652, 1654, 1686, 1687, 1698, 1701, 1702, 1706, 1710, 1724, 1731, 1732, 1738, 1741, 1750, 1752, 1757, 1759, 1769, 1783, 1800, 1803, 1808, 1814, 1816, 1830, 1844, 1846, 1851, 1852, 1861, 1868, 1871, 1886, 1889, 1901, 1911, 1912, 1927, 1928, 1948, 1959, 1961, 1963, 1965, 1992, 2025, 2034, 2037, 2051, 2071, 2100, 2101, 2103, 2126, 2129, 2136, 2160, 2166, 2170, 2180, 2193, 2203, 2242, 2254, 2265, 2269, 2272, 2279, 2280, 2283, 2294, 2298, 2299, 2304, 2314, 2357, 2377, 2380, 2381, 2395, 2406, 2420, 2421, 2422, 2423, 2425, 2431, 2435, 2436, 2459, 2479, 2492, 2498, 2531, 2539, 2574, 2579, 2582, 2587, 2627, 2634, 2672, 2683, 2697, 2716, 2719, 2721, 2731, 2797, 2863, 2937, 2945.

Note 1: This AD applies to each helicopter identified in the preceding applicability provision, regardless of whether it has been modified, altered, or repaired in the area subject to the requirements of this AD. For helicopters that have been modified, altered, or repaired so that the performance of the requirements of this AD is affected, the owner/operator must use the authority provided in paragraph (d) to request approval from the FAA. This approval may address either no action, if the current configuration eliminates the unsafe condition, or different actions necessary to address the unsafe condition described in this AD. Such a request should include an assessment of the effect of the changed configuration on the unsafe condition addressed by this AD. In no case does the presence of any modification, alteration, or repair remove any helicopter from the applicability of this AD.

Compliance: Required as indicated, unless accomplished previously.

To prevent slippage of the T/R drive, loss of directional control, and subsequent loss of control of the helicopter, accomplish the following:

(a) Before further flight, install alignment dots as follows:

(1) Remove the transparent inspection cover on the tail cone and rotate the T/R blades so that one blade leading edge is aligned with the tail cone centerline. Mark a dot on the tail cone skin aligned with the tip of the blade leading edge. With the same alignment, mark a dot on the centerline of the tail cone skin at the edge of the inspection hole, and mark a corresponding dot on the drive shaft flange.

(2) Position the aft T/R blade with leading edge approximately 45-degrees above horizontal. Engage the clutch and rotor brake if the helicopter is so equipped. Use the engine ring gear holding tool, part number (P/N) MT091–1, or an FAA-approved equivalent, to keep the engine from rotating.

(b) Conduct the following daily preflight checks for misalignment of the alignment dots until compliance with paragraph (c) of this AD has been accomplished: Check for misalignment of the alignment dots installed on the tail cone skin and the drive shaft flange by rotating the T/R blade so that the alignment dot is visible in the inspection window and the tip of the T/R blade leading edge aligns with the dot on the tail cone skin. Ensure that the drive shaft flange dot is aligned with the dot on the centerline of the tail cone skin at the edge of the inspection window. If any misalignment is detected, before further flight, replace the T/R gearbox with an airworthy one that has been determined to have both the input and output keys installed in accordance with paragraph (c) of this AD or other FAA-approved procedures, or is exempt from the requirements of this AD as listed in the applicability section of this AD. The checks required by this AD may be performed by an owner/operator holding at least a private pilot certificate and must be entered into the aircraft records showing compliance with this AD, in accordance with sections 43.11 and 91.417(a)(2)(v) of the Federal Aviation Regulations.

(c) Within the next 100 hours time-in-service (TIS) after the effective date of this AD, or at the next annual inspection, whichever occurs first, verify installation of both the input and output shaft keys as follows:

(1) Cut and remove the safety wire securing the chip detector to the sight gage on the T/R gearbox. Place a container under the T/R gearbox to catch the drained oil and remove the chip detector. Remove and discard the gasket on the chip detector.

(2) Remove the T/R gearbox from the helicopter in accordance with the applicable maintenance manual.

(3) Cut and remove the safety wire securing the filler vent plug to the sight gage on the T/R gearbox and remove the filler vent plug and sight gage. Remove and discard the gasket on the filler vent plug and sight gage.

(4) Remove and disassemble the output cartridge, P/N A111–1, from the T/R gearbox case, P/N A109–1 (see figure 1) as follows:

(i) Place a mark across the gear case, P/N A109–1, and output cartridge, P/N A111–1, with a felt pen or grease pencil to ensure proper reassembly.

(ii) Cut and remove the safety wire around the four MS20074–04–06 bolts, securing the output cartridge to the gear case. Remove the four bolts and AN960–416L washer(s). Separate the output cartridge from the gear case (see figure 1).

(iii) Remove and discard the safety wire, MS16562–24 or 52–022–094–0437 roll pin, and MS14145L6 or LCN6M–624 retaining nut. Remove the AN960–616L washer(s) and the washer, P/N A141–2, noting the washer(s) location for reassembly. Do not damage the output shaft, P/N A107–1, or the shim(s), P/N A118–1 through -6, located next to the flange of the output cartridge when removing the retaining nut.

(iv) Visually inspect for the presence of the output shaft key, P/N A114–2, between the pinion gear, P/N A545–1, and the output shaft (see figure 2).

(v) If the output shaft key is missing, replace the T/R gearbox with an airworthy one that has been determined to have the output key installed. Report any T/R gearbox that has a missing key within 10 days after the inspection to the Manager, Los Angeles Manufacturing Inspection Office, FAA, Northwest Mountain Region, 3960 Paramount Blvd., Lakewood, California 90712, telephone (310) 627–5290, fax (310) 627–5293. Reporting requirements have been approved by the Office of Management and Budget and assigned OMB control number 2120–0056.

(vi) If the output key is installed, reinstall the washer, P/N A141–2, and AN960–616L washer(s). Install a MS14145L6 or LCN6M–624 retaining nut, and torque to 200–250 in.-lbs. plus 20–25 in.-lbs. nut drag (maximum 275 in.-lbs.). Install a MS16562–24 or 52–022–094–0437 roll pin, and safety wire using 0.032-inch stainless steel safety wire. The safety wire pigtail must be wrapped tightly around the retaining nut. Vibro-etch the final rule AD number on the output cartridge attachment flange.

(5) Remove and disassemble the input cartridge, P/N A110–1, from the T/R gear case, P/N A109–1, as follows:

(i) Place two marks across the gear case, P/N A109–1, and input cartridge, P/N A110–1, with a felt pen or grease pencil to ensure proper reassembly.

(ii) Cut and remove the safety wire around the four MS20074–04–06 bolts securing the input cartridge to the gear case. Remove the four bolts and AN960–416L washer(s). Separate the input cartridge from the gear case (see figure 1).

(iii) Secure the input cartridge to a block of wood through the two bolt holes in the input shaft assembly, P/N A116–1 (see figure 1). Place the block of wood in a vise. Remove and discard the safety wire, roll pin, and retaining nut. Remove the AN960–616L washer(s), and washer, P/N A141–1, noting the washer(s) location for reassembly. Do not damage the input shaft or shim(s), P/N A118–1 through –6, located next to the flange of the input cartridge.

(iv) Visually inspect for the presence of the input shaft key, P/N A114–1, between the gear, P/N A545–2, and the input shaft (see Note on figure 2).

(v) If the input shaft key is missing, replace the T/R gearbox with an airworthy one that has been determined to have the input key installed. Report any T/R gearbox that has a missing key within 10 days after the inspection to the Manager, Los Angeles Manufacturing Inspection District Office, FAA, Northwest Mountain Region, 3960 Paramount Blvd., Lakewood, California 90712, telephone (310) 627–5290, fax (310) 627–5293. Reporting requirements have been approved by the Office of Management and Budget, and assigned OMB control number 2120–0056.

(vi) If the input key is installed, reinstall the AN960–616L washer(s) and washer, P/N A141–1. Install a MS14145L6 or LCN6M–624 retaining nut, and torque to 200–250 in.-lbs. plus 20–25 in.-lbs. nut drag (maximum 275 in.-lbs.). Install a MS16562–24 or 52–022–094–0437 roll pin and safety wire using 0.032-inch stainless steel safety wire. The safety wire pigtail must be wrapped tightly around the retaining nut. Remove the two

bolts securing the input shaft assembly to the block of wood. Vibro-etch the final rule AD number on the input cartridge attachment flange.

(6) Reassemble the input and output cartridges to the T/R case as follows:

(i) Color the ''X'' marked on the pinion gear, P/N A545–1, (one tooth only) of the output cartridge and on the gear, P/N A545–2, (located on two consecutive teeth) of the input cartridge with a red marker to make reinstallation easier. Note that these three gear teeth may already be colored (see figure 3).

(ii) Visually inspect the edge of the chamfers in the gear case, making sure they are round and smooth so that the O-ring will not be damaged upon installation.

(iii) Remove and discard the O-ring on both the input cartridge and output cartridge. Replace the O-ring with National P/N AS142 B46–70, or Parker P/N 2–142 N674–70 O-ring. Lubricate the replacement O-ring with oil, P/N A257–2, and install an O-ring on each cartridge.

(iv) Reinstall the output cartridge on the gear case with four MS20074–04–06 bolts and AN960–416L washers. Reinstall the input cartridge on the gear case with four MS20074–04–06 bolts and AN960–416L washers. Do not torque the bolts.

(v) Look through the sight gage opening while using a flashlight pointed into the filler vent hole to verify the gears are meshed properly. Gears are properly meshed when the ''X'' marked on the pinion gear of the output cartridge is between the two ''X's'' marked on the gear of the input cartridge (see figure 3). Do not torque the bolts until both cartridges are installed on the case and the gears are properly meshed. Torque the output cartridge first, then the input cartridge to 60 in.-lbs. Safety wire with 0.032-inch stainless steel safety wire.

(vi) Reinstall sight gage with MS35769–11 or AN900–10 gasket. Oil threads to prevent threads from locking up. Torque to 200 in.-lbs.

(vii) Reinstall the chip detector with a MS35769–8 or AN900–9 gasket after lubricating the threads with oil. Torque the chip detector to 150 in.-lbs. Safety wire the sight gage to the chip detector using 0.032-inch stainless steel safety wire.

(viii) Fill the T/R gearbox with oil to the level indicated on the T/R sight glass decal. Reinstall the filler vent plug, P/N A610–1, with a MS35769–9 or AN900–8 gasket, after lubricating the threads with oil.

(ix) Inspect the T/R gearbox assembly to ensure that the shafts and gears rotate freely.

(7) Reinstall the T/R gearbox onto the helicopter in accordance with the applicable maintenance manual. Verify that the oil level of the T/R gearbox is at the recommended mark on the sight glass.

(d) An alternative method of compliance or adjustment of the compliance time that provides an acceptable level of safety may be used when approved by the Manager, Los Angeles Aircraft Certification Office, FAA. Operators shall submit their requests through an FAA Principal Maintenance Inspector, who may concur or comment and then send it to the Manager, Los Angeles Aircraft Certification Office.

Note 2: Information concerning the existence of approved alternative methods of compliance with this AD, if any, may be obtained from the Los Angeles Aircraft Certification Office.

(e) Special flight permits may be issued in accordance with sections 21.197 and 21.199 of the Federal Aviation Regulations (14 CFR 21.197 and 21.199) to operate the helicopter to a location where the requirements of this AD can be accomplished.

BILLING CODE 4910–13–P

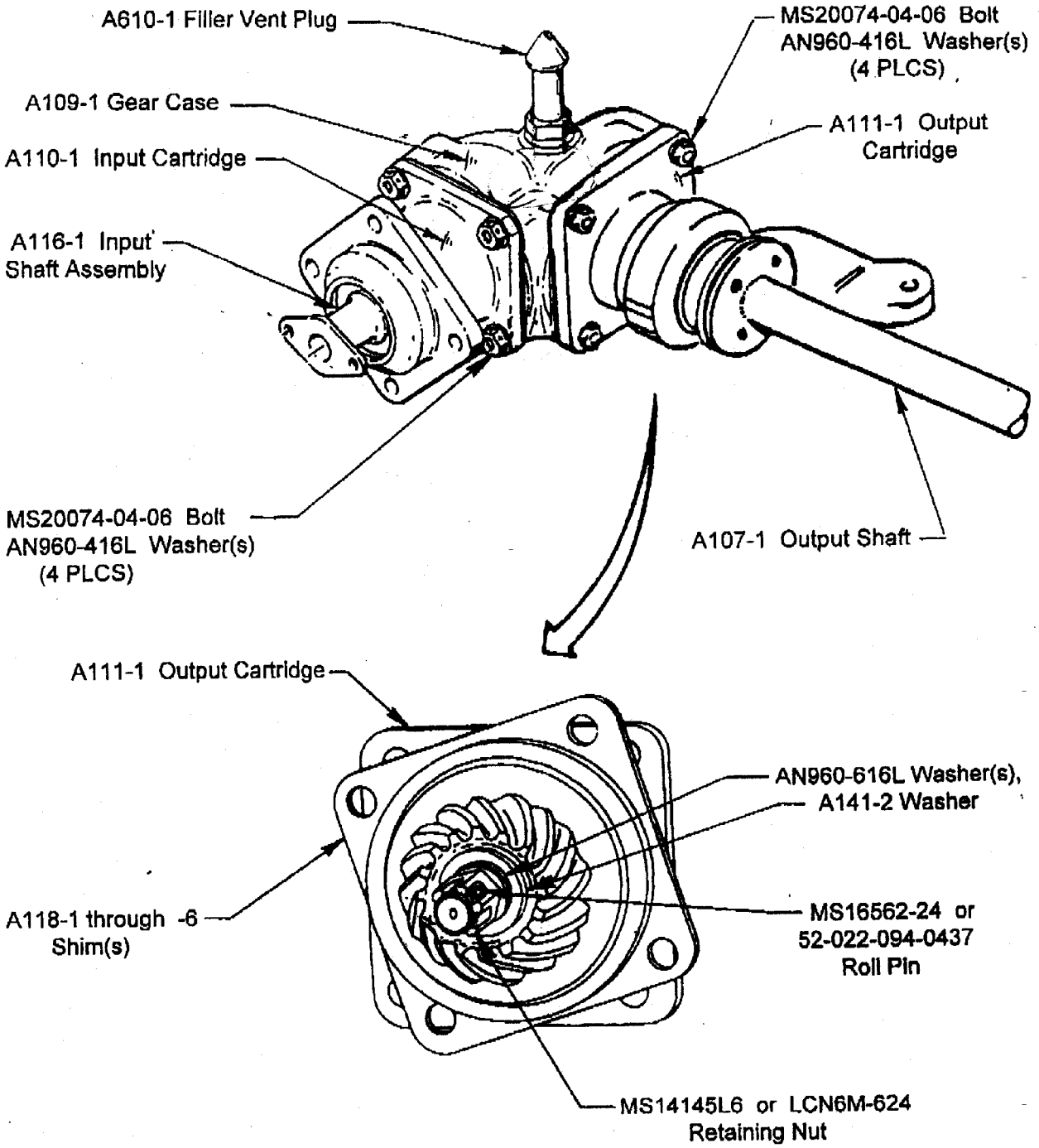

Note: The safety wire has been removed for clarity

Figure 1

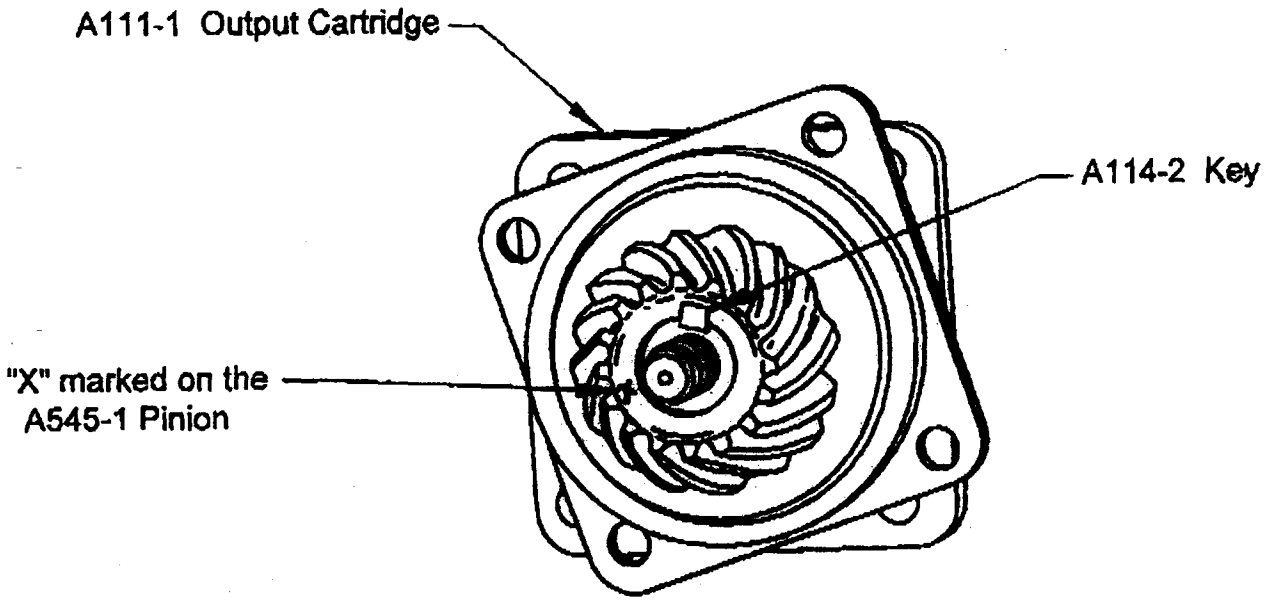

Note: The A114-1 Key for the A110-1 Input Cartridge is located similar to the A111-1 Output Cartridge depicted above

Figure 2

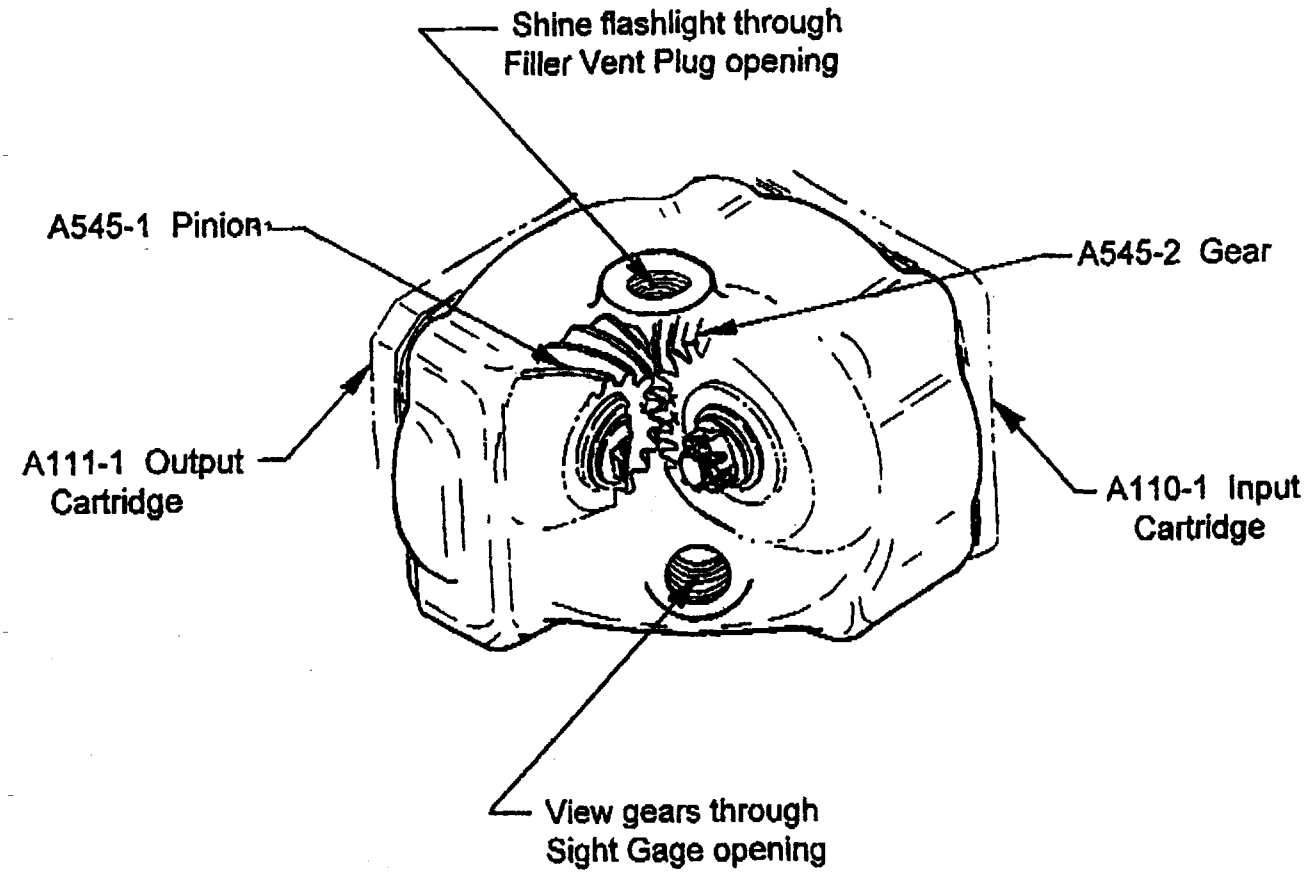

Figure 3

BILLING CODE 4910–13–C

Issued in Fort Worth, Texas, on May 19, 1995.

Eric Bries,

Acting Manager, Rotorcraft Directorate, Aircraft Certificatin Service.

[FR Doc. 95–12955 Filed 5–25–95; 8:45 am]

BILLING CODE 4910–13–P

DEPARTMENT OF JUSTICE

28 CFR PART 16

[AAG/A Order No. 104–95]

Exemption of Records System Under the Privacy Act; Extended Comment Period

AGENCY: Department of Justice.

ACTION: Extension of time to comment on proposed rule.

SUMMARY: On April 21, 1995, the Department of Justice, Bureau of Prisons, proposed to exempt a Privacy Act system of records, the ''Telephone Activity Record System (JUSTICE/BOP–011),'' from subsections (c)(3) and (4), (d), (e)(2) and (3), (e)(5) and (8), (f) and (g) of the Privacy Act, 5 U.S.C. 552a(j)(2) and (k)(2). 60 FR 19871–2. The notice of proposed rulemaking provided for a comment period ending May 22, 1995. 60 FR 19871. In response to a request for an extension of the comment period, the Department of Justice is hereby extending the comment period for an additional 30 days, until June 26, 1995.

DATE: The comment period is extended to June 26, 1995.

ADDRESS: Address all comments to Patricia E. Neely, Staff Assistant, Systems Policy Staff, Justice Management Division, Department of Justice, Washington, DC 20530 (Room 850, WCTR Building).

FOR FURTHER INFORMATION CONTACT: Patricia E. Neely, (202–616–0178).

SUPPLEMENTARY INFORMATION: The Department of Justice provided a description of the ''Telephone Activity Record System,'' JUSTICE/BOP–011,'' at 60 FR 19958–59 (April 21, 1995). In the notice section of today's **Federal Register**, the Department of Justice extends the time within which to comment on this system until June 26, 1995.

Dated: May 17, 1995.

Stephen R. Colgate,

Assistant Attorney General for Administration

[FR Doc. 95–12966 Filed 5–25–95; 8:45 am]

BILLING CODE 4410–05–M

DEPARTMENT OF TRANSPORTATION

Coast Guard

33 CFR Part 100

[CGD01–95–058]

Special Local Regulations: Connecticut River Raft Race, Middletown, CT

AGENCY: Coast Guard, DOT.

ACTION: Notice of proposed rulemaking.

SUMMARY: The Coast Guard proposes to amend the special local regulations governing the Connecticut River Raft Race. The regulated area would be moved upriver to coincide with a change in the race course. The effective date of the race also would be changed to the last Saturday in July or the first Saturday in August as published in an annual Local Notice to Mariners and **Federal Register** Notice. This regulation is necessary to control vessel traffic within the immediate vicinity of the event due to the confined nature of the waterway and anticipated congestion at the time of the event, thus providing for the safety of life and property on the affected navigable waterway.

DATES: Comments must be received on or before July 25, 1995.

ADDRESSES: Comments should be mailed to Commander (b), First Coast Guard District, Captain John Foster Williams Federal Building, 408 Atlantic Ave., Boston, Massachusetts 02110–3350. Comments also may be hand-delivered to room 428 at the same address between 8 a.m. and 4 p.m., Monday through Friday, except federal holidays.

FOR FURTHER INFORMATION CONTACT: LTJG Benjamin M. Algeo, Chief Boating Affairs Branch, First Coast Guard District, (617) 223–8311.

SUPPLEMENTARY INFORMATION:

Request for Comments

The Coast Guard encourages interested persons to participate in this rulemaking by submitting written data, views, or arguments. Persons submitting comments should include their names and addresses, identify this notice [CGD01–95–058], the specific section of the proposal to which each comment applies, and give reasons for each comment. The Coast Guard requests that all comments and attachments be submitted in an 8½″ x 11″ unbound format suitable for copying and electronic filing. If that is not practical, a second copy of any bound material is requested. Persons requesting acknowledgment of receipt of comments should enclose a stamped, self-addressed postcard or envelope.

The Coast Guard will consider all comments received during the comment period. It may change this proposal in view of the comments. The Coast Guard plans no public hearing. Persons may request a public hearing by writing to Commander (b), First Coast Guard District at the address under **ADDRESSES.** The request should include reasons why a hearing would be beneficial. If it determines that the opportunity for oral presentations will aid this rulemaking, the Coast Guard will hold a public hearing at a time and place announced by a later notice in the **Federal Register**.

Drafting Information

The drafters of this notice are LTJG B. M. Algeo, Project Manager, Boating Affairs Branch and LCDR S. R. Watkins, Project Counsel, District Legal Office.

Background and Purpose

The Connecticut River Raft Race is in its twenty first year, and is a popular local event. A late decision was made by the race committee last year to move the race course upriver which necessitated temporarily amending the permanent regulation governing the race. Insufficient time was available before last year's race to publish a NPRM and permanently change the regulated area, therefore a permanent change is being proposed this year. This event will include up to 60 homemade rafts and is expected to draw up to 100 spectator craft. The Coast Guard expects no significant difference in the race from years past.

Discussion of Proposed Amendments

The Coast Guard proposes to permanently amend the special local regulation found in 33 CFR 100.102 governing the Connecticut River Raft Race. The existing regulation provides for a regulated area between the Salmon River (Marker no. 48) and Middle Haddam (Marker no. 72) and an effective period of the first Saturday in August between 9 a.m. until 2 p.m. The event sponsors have moved the race course a short distance upriver to facilitate spectator control on the shore. The race course and regulated areas will now consist of that portion of the Connecticut River between Marker nos. 92 and 73, Middletown, CT. The sponsor has also indicated the intention to hold future events on the last Saturday in July or first Saturday in August.

Because the race course coincides with a marked channel, vessel traffic will be temporarily restricted to provide for the safety of the participants. Little

commercial traffic is known to transit the area; however, sufficient notice will be provided for any affected party to alter plans with minimal impact.

Regulatory Evaluation

This proposal is not a significant regulatory action under section 3(f) of Executive Order 12866, and does not require an assessment of potential costs and benefits under section 6(a)(3) of that order. It has been exempted from review by the Office of Management and Budget under that order. It is not significant under the regulatory policies and procedures of the Department of Transportation (DOT) (44 FR 11040, February 26, 1979). The Coast Guard expects the economic impact of this proposal to be so minimal that a full Regulatory Evaluation, under paragraph 10e of the regulatory policies and procedures of DOT, is unnecessary. Commercial traffic on the affected portion of the Connecticut River is infrequent. The race is popular and is anticipated to draw business to the local merchants. Local commercial entities have been notified of the race schedule.

Small Entities

Under the Regulatory Flexibility Act (5 U.S.C. 601 *et seq.*), the Coast Guard must consider whether this proposal will have a significant economic impact on a substantial number of small entities. ''Small entities'' include independently owned and operated small businesses that are not dominant in their fields and that otherwise qualify as ''small business concerns'' under section 3 of the Small Business Act (15 U.S.C. 632).

For reasons set forth in the above Regulatory Evaluation, the Coast Guard certifies under 5 U.S.C. 605(b) that this proposal, if adopted, will not have a significant economic impact on a substantial number of small entities.

Collection of Information

This proposal contains no collection of information requirements under the Paperwork Reduction Act (44 U.S.C. 3501 *et seq.*).

Federalism

The Coast Guard has analyzed this proposal in accordance with the principles and criteria contained in Executive Order 12612, and has determined that this proposal does not raise sufficient federalism implications to warrant the preparation of a Federalism Assessment.

Environment

The Coast Guard has considered the environmental impact of this proposal and in accordance with paragraph 2.B.2.e(35)(e) of Commandant Instruction M16475.1B, the event is deemed to be categorically excluded from further environmental documentation.

List of Subjects in 33 CFR Part 100

Marine safety, Navigation (water), Reporting and recordkeeping requirements, Waterways.

For the reasons set out in the preamble, the Coast Guard proposes to revise 33 CFR part 100 as follows:

PART 100—[AMENDED]

1. The authority citation for Part 100 continues to read as follows:

Authority: 33 USC 1233; 49 CFR 1.46 and 33 CFR 100.35.

2. Section 100.102 is revised to read as follows:

§ 100.102 Connecticut River Raft Race, Middletown, Ct.

(a) *Regulated area*. That section of the Connecticut River between Dart Island (Marker no. 73) and Portland Shoals (Marker no. 92), Middletown, CT.

(b) *Effective period*. This section will be effective from 9 a.m. to 2 p.m. annually on the last Saturday in July or the first Saturday in August, or as otherwise published in the annual, pre-event Coast Guard Local Notice to Mariners and Federal Register Notice.

(c) *Special Local Regulations*.

(1) The regulated area shall be closed to all vessels in excess of 20 meters (65.6 feet) in length during the effective period.

(2) All persons or vessels not registered with the sponsor as participants or not part of the regatta patrol are considered spectators.

(3) All spectator vessels shall be moored or anchored prior to the start of the event in such a way as to not interfere with the passage of the race participants. They shall remain anchored or moored until the end of the race or until directed by a patrol vessel.

(4) All persons and vessels shall comply with the instructions of U.S. Coast Guard patrol personnel. U.S. Coast Guard patrol personnel include commissioned, warrant, and petty officers of the Coast Guard. Upon hearing five or more blasts from a U.S. Coast Guard vessel, the operator of a vessel shall stop immediately and proceed as directed. Members of the Coast Guard Auxiliary may be present to inform vessel operators of this regulation and other applicable laws.

(5) For any violation of this section, the following maximum penalties are authorized by law:

(i) $500 for any person in charge of the navigation of a vessel.

(ii) $500 for the owner of the vessel actually on board.

(iii) $250 for any other person.

(iv) Suspension or revocation of a license for a licensed officer.

May 15, 1995.

J.L. Linnon,

Rear Admiral, U.S. Coast Guard, Commander, First Coast Guard District.

[FR Doc. 95–13025 Filed 5–25–95; 8:45 am]

BILLING CODE 4910–14–M

DEPARTMENT OF COMMERCE

Patent and Trademark Office

37 CFR Parts 1, 2, and 7

[Docket No. 950501124–5124–01]

RIN 0651–AA74

Revision of Patent and Trademark Fees

AGENCY: Patent and Trademark Office, Commerce.

ACTION: Notice of proposed rulemaking.

SUMMARY: The Patent and Trademark Office (PTO) proposes to amend the rules of practice in patent and trademark cases, Parts 1, 2 and 7 of title 37, Code of Federal Regulations, to adjust certain patent and trademark fee amounts to reflect fluctuations in the Consumer Price Index (CPI) and to recover costs of operation, and to amend the requirements for recording an assignment to apply to documents forwarded for recording on the Government Register. This notice also includes information relating to the availability of patent and trademark information products provided by the PTO.

DATES: Written comments must be submitted on or before June 29, 1995; a public hearing will be held on June 29, 1995, at 9 a.m. Requests to present oral testimony should be received on or before June 28, 1995.

ADDRESSES: Address written comments and requests to present oral testimony to the Commissioner of Patents and Trademarks, Washington, DC 20231, Attention: Robert Kopson, suite 507, Crystal Park 1, or by fax to (703) 305–8525. The hearing will be held in suite 912 of Crystal Park 2, located at 2121 Crystal Drive, Arlington, Virginia. Written comments and a transcript of the hearing will be available for public inspection in suite 507 of Crystal Park 1, located at 2011 Crystal Drive, Arlington, Virginia.

FOR FURTHER INFORMATION CONTACT: Robert Kopson by telephone at (703) 305–8510, fax at (703) 305–8525, or by mail marked to his attention and addressed to the Commissioner of Patents and Trademarks, Washington, DC 20231.

SUPPLEMENTARY INFORMATION: This proposed rule change is designed to adjust PTO fees in accordance with the applicable provisions of title 35, United States Code; section 31 of the Trademark (Lanham) Act of 1946 (15 U.S.C. 1113); and section 10101 of the Omnibus Budget Reconciliation Act of 1990 (as amended by section 8001 of Public law 103–66), all as amended by the Patent and Trademark Office Authorization Act of 1991 (Public Law 102–204).

Background

Statutory Provisions

Patent fees are authorized by 35 U.S.C. 41 and 35 U.S.C. 376. A fifty percent reduction in the fees paid under 35 U.S.C. 41 (a) and (b) by independent inventors, small business concerns, and nonprofit organizations who meet prescribed definitions is required by 35 U.S.C. 41(h).

Subsection 41(f) of title 35, United States Code, provides that fees established under 34 U.S.C. 41 (a) and (b) may be adjusted on October 1, 1992, and every year thereafter, to reflect fluctuations in the Consumer Price Index (CPI) over the previous 12 months.

Section 10101 of the Omnibus Budget Reconciliation Act of 1990 (amended by section 8001 of Public Law 103–66) provides that there shall be a surcharge on all fees established under 35 U.S.C. 41 (a) and (b) to collect $111 million in fiscal year 1996.

Subsection 41(d) of title 35, United States Code, authorizes the Commissioner to establish fees for all other processing, services, or materials related to patents to recover the average cost of providing these services or materials, except for the fees for recording a document affecting title, for each photocopy, and for each black and white copy of a patent.

Section 376 of title 35, United States Code, authorizes the Commissioner to set fees for Patent applications filed under the Patent Cooperation Treaty (PCT).

Subsection 41(g) of title 35, United States Code, provides that new fee amounts established by the Commissioner under section 41 may take effect thirty days after notice in the **Federal Register** and the Official Gazette of the Patent and Trademark Office.

Section 31 of the Trademark (Lanham) Act of 1946, as amended (15 U.S.C. 1113), authorizes the Commissioner to establish fees for the filing and processing of an application for the registration of a trademark or other mark, and for other services and materials relating to trademarks and other marks.

Section 31(a) of the Trademark (Lanham) Act of 1946 (15 U.S.C. 1113(a)), as amended, allows trademark fees to be adjusted once each year to reflect, in the aggregate, any fluctuations during the preceding 12 months in the CPI.

Section 31 also allows new trademark fee amounts to take effect thirty days after notice in the **Federal Register** and the Official Gazette of the United States Patent and Trademark Office.

Recovery Level Determinations

The proposed rule would adjust patent and trademark fees for a planned recovery of $643,014,000 in fiscal year 1996, as proposed in the Administration's budget request to the Congress.

The patent statutory fees established by 35 U.S.C. 41 (a) and (b) are proposed to be adjusted on October 1, 1995, to reflect any fluctuations occurring during the previous 12 months in the Consumer Price Index (CPI–U). In calculating these fluctuations, the Office of Management and Budget (OMB) has determined that the PTO should use CPI–U data as determined by the Secretary of Labor. However, the Department of Labor does not make public the CPI–U until approximately 21 days after the end of the month being calculated. Therefore, the latest CPI–U information available is for the month of February 1995. In accordance with previous rulemaking methodology, the PTO uses the Administration's projected CPI–U for the 12-month period ending September 30, 1995, which is 3.2 percent. Based on this projection, patent statutory fees are proposed to be adjusted by 3.2 percent. Before the final fee schedule is published, the fees may be slightly adjusted based on actual data available from the Department of Labor.

Certain non-statutory patent processing fees established under 35 U.S.C. 41(d) and PCT processing fees established under 35 U.S.C. 376 are proposed to be adjusted to recover their estimated average costs in fiscal year 1996. Three patent service fees that are set by statute will not be adjusted. The three fees that are not being adjusted are assignment recording fees, printed patent copy fees and photocopy charge fees.

Certain trademark service fees established under 15 U.S.C. 1113 are proposed to be adjusted to recover their estimated average costs in fiscal year 1996.

The proposed fee amounts were rounded by applying standard arithmetic rules so that the amounts rounded would be convenient to the user. Fees of $100 or more were rounded to the nearest $10. Fees between $2 and $99 were rounded to an even number so that the comparable small entity fee would be a whole number.

Workload Projections

Determination of workloads varies by fee. Principal workload projection techniques are as follows:

Patent application workloads are projected from statistical regression models using recent application filing trends. Patent issues are projected from an in-house patent production model and reflect examiner production achievements and goals. Patent maintenance fee workloads utilize patents issued 3.5, 7.5 and 11.5 years prior to payment and assume payment rates of 79 percent, 55 percent and 32 percent, respectively. Service fee workloads follow linear trends from prior years' activities.

General Procedures

Any fee amount that is paid on or after the effective date of the fee increase would be subject to the new fees then in effect. For purposes of determining the amount of the fee to be paid, the date of mailing indicated on a proper Certificate of Mailing or Transmission, where authorized under 37 CFR 1.8, will be considered to be the date of receipt in the PTO. A Certificate of Mailing or Transmission under Section 1.8 is not ''proper'' for items which are specifically excluded from the provisions of Section 1.8. Section 1.8 should be consulted for those items for which a Certificate of Mailing or Transmission is not ''proper.'' Such items include, inter alia, the filing of national and international applications for patents and the filing of trademark applications. However, the provisions of 37 CFR 1.10 relating to filing papers and fees with an ''Express Mail'' certificate do apply to any paper or fee (including patent and trademark applications) to be filed in the PTO. If an application or fee is filed by ''Express Mail'' with a proper certificate dated on or after the effective date of the rules, as amended, the amount of the fee to be paid would be

the fee established by the amended rules.

A notice of final rulemaking was published at 60 FR 20195 (April 25, 1995) wherein several new fee provisions were made to implement the 20-year patent term and provisional applications. Language changes were made in 37 CFR 1.16 (a), (b), (d), (f), and (g) which are reproduced in this proposed rule package. In addition, fees involving 37 CFR 1.17 (r) and (s) are now proposed to be adjusted by changes in the CPI to remain equal to the basic filing fee for a utility patent application.

PTO Information Dissemination Products

The PTO provides information to the public in the Patent Search Room and the Trademark Search Library in Arlington, Virginia, and at 78 Patent and Trademark Depository Libraries around the country. A list of the libraries is included in each issue of the Official Gazette of the Patent and Trademark Office. In addition, a number of patent and trademark search tools and document-delivery products, published on paper and on various machine-readable media, are sold directly to the public.

Printed PTO publications may be ordered from the Government Printing Office or one of its Book Stores located throughout the country. A list of patent and trademark-related publications with current prices and ordering information is available from the GPO (Subject Bibliography SB 021)—Superintendent of Documents, P.O. Box 371984, Pittsburgh, PA 15250–7954, voice: 202–512–1800, fax: 202–512–2250.

Machine-readable publications, including magnetic tapes and CD–ROMs, may be ordered directly from the PTO. A printed-catalog of machine-readable products, including current prices and ordering information, is available from the Office of Information Products Development—US Patent & Trademark Office, Office of Information Products Development, Crystal Park 3, Room 412, Washington, DC 20231, voice: 703–308–0322, fax: 703–308–0493.

The catalog of machine-readable products is published in the Official Gazette of the Patent and Trademark Office in late December each year and may also be viewed on, or downloaded from, the PTO electronic bulletin board (703–305–8950, 8/no/1) or from the PTO's home page on the Internet (http://www.uspto.gov/).

Discussion of Specific Rules

37 CFR 1.16 National Application Filing Fees

Section 1.16, paragraphs (a), (b), (d), and (f)–(i), if revised as proposed, would adjust fees established therein to reflect fluctuations in the CPI.

Section 1.16, paragraphs (a), (b), (d), (f), and (g) include language changes relating to provisional patent applications (see 60 FR 20195, dated April 25, 1995).

37 CFR 1.17 Patent Application Processing Fees

Section 1.17, paragraphs (b)–(g), (m), (r), and (s), if revised as proposed, would adjust fees established therein to reflect fluctuations in the CPI.

Section 1.17, paragraphs (j) and (n)–(p), if revised as proposed, would adjust fees established therein to recover costs.

37 CFR 1.18 Patent Issue Fees

Section 1.18, paragraphs (a)–(c), if revised as proposed, would adjust fees established therein to reflect fluctuations in the CPI.

37 CFR 1.19 Document Supply Fees

Section 1.19, paragraphs (a)(1)(ii) and (a)(1)(iii), if revised as proposed, would amend the language to reflect the PTO's most recent business practices.

Section 1.19, paragraph (b)(1), if revised as proposed, would adjust fees established therein to reflect fluctuations in the CPI.

37 CFR 1.20 Post-Issuance Fees

Section 1.20, paragraphs (c), (i), and (j), if revised as proposed, would adjust fees established therein to recover costs.

Section 1.20, paragraphs (e)–(g), if revised as proposed, would adjust fees established therein to reflect fluctuations in the CPI.

37 CFR 1.21 Miscellaneous Fees and Charges

Section 1.21, paragraph (a)(1), if revised as proposed, would adjust fees established therein to recover costs.

37 CFR 1.445 International Application Filing, Processing, and Search Fees

Section 1.445, paragraph (a), if revised as proposed, would adjust the fees authorized by 35 U.S.C. 376 to recover costs.

37 CFR 1.482 International Preliminary Examination Fees

Section 1.482, paragraphs (a)(1)(i), (a)(1)(ii), and (a)(2)(ii), if revised as proposed, would adjust the fees authorized by 35 U.S.C. 376 to recover costs.

37 CFR 1.492 National Stage Fees

Section 1.492, paragraphs (a), (b) and (d), if revised as proposed, would adjust fees established therein to reflect fluctuations in the CPI.

37 CFR 2.6 Trademark Fees

Section 2.6, paragraphs (b)(1)(ii) and (b)(1)(iii), if revised as proposed, would amend the language to reflect the PTO's most recent business practices.

Section 2.6, paragraph (b)(2), if revised as proposed, would adjust fees therein to recover costs.

37 CFR 7.1 Requirements

Section 7.1, if revised as proposed, would designate the current language as paragraph (a), and would add new paragraphs (b)–(h) to clarify that the requirements for patent and patent application assignment documents, including the requirement for the fee set forth in § 1.21(h), submitted for recording also apply to instruments submitted for recording on the Government Register. Sections 7.1(b)–(h) contain language similar to that in §§ 3.21, 3.28, 3.31, 3.34, 3.26, 3.27, and 3.41, respectively.

Section 7.1(b), if revised as proposed, would provide that an instrument relating to a patent must identify the patent by the patent number, that an instrument relating to a national patent application must identify the national patent application by the application number (consisting of the series code and the serial number, e.g., 07/123,456) or the serial number and filing date, that an instrument relating to an international patent application which designates the United States of America must identify the international application by the international application number (e.g., PCT/US90/01234), and that if an assignment is executed concurrently with, or subsequent to, the execution of the patent application, but before the patent application is filed, it must identify the patent application by its date of execution, name of each inventor, and title of the invention so that there can be no mistake as to the patent application intended.

Section 7.1(c), if revised as proposed, would provide that each instrument submitted to the Office for recording must be accompanied by a cover sheet referring to those patent applications and patents against which the instrument is to be recorded, that one set of instruments and cover sheets to be recorded should be filed, and that if an instrument to be recorded is not accompanied by a completed cover sheet, the instrument and any

incomplete cover sheet will be returned for proper completion of a cover sheet and resubmission of the instrument and a completed cover sheet.

Section 7.1(d), if revised as proposed, would provide that each cover sheet must contain: (1) the name of the party conveying the interest; (2) the name and address of the party receiving the interest; (3) a description of the interest conveyed or transition to be recorded; (4) each application number or patent number against which the instrument is to be recorded, or an indication that the instrument is filed together with a patent application; (5) the name and address of the party to whom correspondence concerning the request to record the instrument should be mailed; (6) the number of applications or patents identified in the cover sheet and the total fee; (7) the date the instrument was executed; (8) a statement by the party submitting the instrument that to the best of the person's knowledge and belief, the information contained on the cover sheet is true and correct and any copy submitted is a true copy of the original instrument; and (9) the signature of the party submitting the instrument.

Section 7.1(e), if revised as proposed, would provide for the correction of errors in the cover sheet. Specifically, § 7.1(e), as proposed, would provide that an error in a cover sheet recorded pursuant to this Part will be corrected only if: (1) the error is apparent when the cover sheet is compared with the recorded instrument to which it pertains, and (2) a corrected cover sheet accompanied by the recording fee set forth in § 1.21(h) of this chapter and either the original recorded instrument or a copy of the original recorded instrument is filed for recordation.

Section 7.1(f), if revised as proposed, would provide that the Office will accept and record non-English language instruments only if accompanied by a verified English translation signed by the individual making the translation.

Section 7.1(g), if revised as proposed, would provide that instruments and cover sheets to be recorded should be addressed to the Commissioner of Patents and Trademarks, Box Assignment, Washington, D.C. 20231.

Section 7.1(h), if revised as proposed, would provide that all requests to record instruments must be accompanied by the recording fee set forth in § 1.21(h) of this chapter, and that the fee set forth in § 1.21(h) of this chapter is required for each application and patent against which the instrument is recorded as identified in the cover sheet.

Other Considerations

This proposed rule change is in conformity with the requirements of Executive Order 12612, and the Paperwork Reduction Act of 1980, 44 U.S.C. 3501, et seq. This rulemaking contains one information collection entry relating to registration of Government patent interests in patents. This information collection has been approved by the Office of Management and Budget under Control Number 0651–0027. This proposed rule has been determined not to be significant for purposes of Executive Order 12866.

The PTO has determined that this proposed rule change has no Federalism implications affecting the relationship between the National Government and the States as outlined in Executive Order 12612.

The Assistant General Counsel for Legislation and Regulation of the Department of Commerce has certified to the Chief Counsel for Advocacy, Small Business Administration, that the proposed rule change would not have a significant impact on a substantial number of small entities (Regulatory Flexibility Act, Pub. L. 96–354). The proposed rule change increases fees to reflect the change in the CPI as authorized by 35 U.S.C. 41(f). Further, the principal impact of the major patent fees has already been taken into account in 35 U.S.C. 41(h), which provides small entities with a 50-percent reduction in the major patent fees.

A comparison of existing and proposed fee amounts is included as an Appendix to this notice of proposed rulemaking.

In order to ensure clarity in the implementation of the proposed fees, a discussion of specific sections is set forth below.

Lists of Subjects

37 CFR Part 1

Administrative practices and procedure, Inventions and patents, Reporting and record keeping requirements, Small businesses.

37 CFR Part 2

Administrative practice and procedure, Courts, Lawyers, Trademarks.

37 CFR Part 7

Administrative practice and procedure, Inventions and patents, Reporting and record keeping requirements.

For the Reasons set forth in the preamble, the PTO proposes to amend title 37 of the Code of Federal Regulations, Chapter 1, Part 1, as set forth below.

PART 1—RULES OF PRACTICE IN PATENT CASES

1. The authority citation for 37 CFR Part 1 would continue to read as follows:

Authority: 35 U.S.C. 6, unless otherwise noted.

2. Section 1.16 is proposed to be amended by revising paragraphs (a), (b), (d), and (f) through (i), to read as follows:

§ 1.16 National application filing fees.

(a) Basic fee for filing each application for an original patent, except provisional, design or plant applications:	
By a small entity (§ 1.9(f))	$375.00
By other than a small entity ...	750.00
(b) In addition to the basic filing fee in an original application, except provisional applications, for filing or later presentation of each independent claim in excess of 3:	
By a small entity (§ 1.9(f))	39.00
By other than a small entity ...	78.00

* * * * *

(d) In addition to the basic filing fee in an original application, except provisional applications, if the application contains, or is amended to contain, multiple dependent claim(s), per application:	
By a small entity (§ 1.9(f))	125.00
By other than a small entity ...	250.00
(If the additional fees required by paragraphs (b), (c), and (d) of this section are not paid on filing or on later presentation of the claims for which the additional fees are due, they must be paid or the claims canceled by amendment prior to the expiration of the time period set for response by the Office in any notice of fee deficiency.)	

* * * * *

(f) Basic fee for filing each design application:	
By a small entity (§ 1.9(f))	155.00
By other than a small entity ...	310.00
(g) Basic fee for filing each plant application, except provisional applications:	
By a small entity (§ 1.9(f))	255.00
By other than a small entity ...	510.00
(h) Basic fee for filing each reissue application:	
By a small entity (§ 1.9(f))	375.00
By other than a small entity ...	750.00

(i) In addition to the basic filing fee in a reissue application, for filing or later presentation of each independent claim which is in excess of the number of independent claims in the original patent:

By a small entity (§ 1.9(f)) 39.00
By other than a small entity ... 78.00

* * * * *

3. Section 1.17 is propose to amend by revising paragraphs (b) through (g), (j), (m) through (p), (r), and (s) to read as follows:

§ 1.17 Patent application processing fees.

* * * * *

(b) Extension fee for response within second month pursuant to § 1.136(a):

By a small entity (§ 1.9(f)) $190.00
By other than a small entity ... 380.00

(c) Extension fee for response within third month pursuant to § 1.136(a):

By a small entity (§ 1.9(f)) 450.00
By other than a small entity ... 900.00

(d) Extension fee for response within fourth month pursuant to § 1.136(a):

By a small entity (§ 1.9(f)) 700.00
By other than a small entity ... 1,400.00

(e) For filing a notice of appeal from the examiner to the Board of Patent Appeals and Interferences:

By a small entity (§ 1.9(f)) 145.00
By other than a small entity ... 290.00

(f) In addition to the fee for filing notice of appeal, for filing a brief in support of an appeal:

By a small entity (§ 1.9(f)) 145.00
By other than a small entity ... 290.00

(g) For filing a request for an oral hearing before the Board of Patent Appeals and Interferences in an appeal under 35 U.S.C. 134:

By a small entity (§ 19(f)) 125.00
By other than a small entity ... 250.00

* * * * *

(j) For filing a petition to institute a pubic use proceeding under § 1.292 ..... 1,430.00

* * * * *

(m) For filing a petition:

(1) For revival of an unintentionally abandoned application, or

(2) For the unintentionally delayed payment of the fee for issuing a patent:

By a small entity (§ 1.9(f)) 625.00
By other than a small entity ... 1,250.00

(n) For requesting publication of a statutory invention registration prior to the mailing of the first examiner's action pursuant to § 1.104—$870.00 reduced by the amount of the application basic filing fee paid.

(o) For requesting publication of a statutory invention registration after the mailing of the first examiner's action pursuant to § 1.104—$1,740.00 reduced by the amount of the application basic filing fee paid.

(p) For submission of an information disclosure statement under § 1.97(c) 220.00

* * * * *

(r) For entry of a submission after final rejection under § 1.129(a):

By a small entity (§ 1.9(f)) 375.00
By other than a small entity ... 750.00

(s) For each additional invention requested to be examined under § 1.129(b):

By a small entity (§ 1.9(f)) 375.00
By other than a small entity ... 750.00

4. Section 1.18 is proposed to be revised to read as follows:

§ 1.18 Patent issue fees.

(a) Issue fee for issuing each original or reissue patent, except a design or plant patent:

By a small entity (§ 1.9(f)) $625.00
By other than a small entity ... 1,250.00

(b) Issue fee for issuing a design patent:

By a small entity (§ 1.9(f)) 215.00
By other than a small entity ... 430.00

(c) Issue fee for issuing a plant patent:

By a small entity (§ 1.9(f)) 315.00
By other than a small entity ... 630.00

5. Section 1.19 is proposed to be amended by revising paragraphs (a)(1)(ii), (a)(1)(iii), and (b)(1) (i) and (ii) to read as follows:

§ 1.19 Document supply fees.

* * * * *

(a) * * *

(1) * * *

* * * * *

(ii) Overnight delivery to PTO Box or overnight fax $6.00

(iii) Expedited service for copy ordered by expedited mail or fax delivery service and delivered to the consumer within two workdays 25.00

* * * * *

(b) * * *

(1) * * *

(i) Regular service 15.00
(ii) Expedited regular service .. 30.00

* * * * *

6. Section 1.20 is proposed to be amended by revising paragraphs (c), (e) through (g), (i), (1), (i) (2) and (j) to read as follows:

§ 1.20 Post issuance fees.

* * * * *

(c) For filing a request for rexamination (§ 1.510(a)) $2,390.00

* * * * *

(e) For maintaining an original or reissue patent, except a design or plant patent, based on an application filed on or after December 12, 1980, in force beyond four years, the fee is due by three years and six months after the original grant

By a small entity § 1.9(f)) 495.00
By other than a small entity ... 990.00

(f) For maintaining an original or reissue patent, except a design or plant patent, based on an application filed on or after December 12, 1980, in force beyond eight years; the fee is due by seven years and six months after the original grant

By a small entity (§ 1.9(f)) 995.00
By other than a small entity ... 1,990.00

(g) For maintaining an original or reissue patent, except a design or plant patent, based on an application field on or after December 12, 1980, in force beyond twelve years; the fee is due by eleven years and six months after the original grant

By a small entity (§ 1.9(f)) 1,495.00
By other than a small entity ... 2,990.00

* * * * *

(i) * * *

(1) unavoidable 660.00
(2) unintentional 1,550.00

* * * * *

(j) For filing an application for extension of the term of a patent (§ 1.740) 1,060.00

7. Section 1.21 is proposed to be amended by revising paragraph (a)(1) to read as follows:

§ 1.21 Miscellaneus fees and charges.

* * * * *

(a) * * *

(1) For admission to examination for registration to practices: fee payable upon application 310.00

* * * * *

8. Section 1.445 is proposed to be amended by revising paragraph (a) to read as follows:

§ 1.445 International application filing, processing and search fees.

(a) the following fees and charges for international applications are established by the Commissioner under the authority of 35 U.S.C. 376:

(1) A transmittal fee (see 35 U.S.C. 361(d) and PCT Rule 14) $220.00

(2) A search fee (see 35 U.S.C. 361(d) and PCT Rule 16) where:

(i) No corresponding prior United States national application with basic filing fee has been filed 660.00

(ii) A corresponding prior United States national application with basic filing fee has been filed 430.00

(3) A supplemental search fee when required, per additional invention 190.00

* * * * *

9. Section 1.482 is proposed to be amended by revising paragraphs (a)(1)(i), (a)(1)(ii), and (a)(2)(ii) to read as follows:

§ 1.482 International preliminary examination fees.

(a) * * *

(1) A preliminary examination fee is due on filing the Demand:

(i) Where an international search fee as set forth in § 1.445(a)(2) has been paid on the international application to the United States Patent and Trademark Office as an International Searching Authority, a preliminary examination fee of $470.00

(ii) Where the International Searching Authority for the international application was an authority other than the United States Patent and Trademark Office, a preliminary examination fee of 710.00

(2) * * *

(ii) Where the International Searching Authority for the international application was an authority other than the United States Patent and Trademark Office 250.00

* * * * *

10. Section 1.492 is proposed to be amended by revising paragraphs (a), (b), and (d) to read as follows:

§ 1.492 National Stage fees.

* * * * *

(a) The basic national fee:

(1) Where an international preliminary examination fee as set forth in § 1.482 has been paid on the international application to the United States Patent and Trademark Office:

By a small entity (§ 1.9(f)) $340.00

By other than a small entity ... 680.00

(2) Where no international preliminary examination fee as set forth in § 1.482 has been paid to the United States Patent and Trademark Office, but an international search fee as set forth in § 1.445(a)(2) has been paid on the international application to the United State Patent and Trademark Office as an International Searching Authority:

By a small entity (§ 1.9(f)) 375.00

By other than a small entity ... 750.00

(3) Where no international preliminary examination fee as set forth in § 1.482 has been paid and no international search fee as set forth in § 1.445(a)(2) has been paid on the international application to the United States Patent and Trademark Office:

By a small entity (§ 1.9(f)) 505.00

By other than a small entity ... 1,010.00

(4) Where an international preliminary examination fee as set forth in § 1.482 has been paid to the United States Patent and Trademark Office and the international preliminary examination report states that the criteria of novelty, inventive step (non-obviousness), and industrial applicability, as defined in PCT Article 33 (1) to (4) have been satisfied for all the claims presented in the application entering the national stage (see § 1.496(b)):

By a small entity (§ 1.9(f)) 47.00

By other than a small entity ... 94.00

(5) Where a search report on the international application has been prepared by the European Patent Office or the Japanese Patent Office:

By a small entity (§ 1.9(f)) 440.00

By other than a small entity ... 880.00

(b) In addition to the basic national fee, for filing or later presentation of each independent claim in excess of 3:

By a small entity (§ 1.9(f)). 39.00

By other than a small entity ... 78.00

* * * * *

(d) In addition to the basic national fee, if the application contains, or is amended to contain, a multiple dependent claim(s), per applicant:

By a small entity (§ 1.9(f)) 125.00

By other than a small entity ... 250.00

* * * * *

PART 2—RULES OF PRACTICE IN TRADEMARK CASES

1. The authority citation for 37 CFR Part 2 would continue to read as follows:

Authority: 15 U.S.C. 1123; 35 U.S.C. 6, unless otherwise noted.

2. Section 2.6 is proposed to be amended by revising paragraphs (b)(1)(ii), (b)(1)(iii), (b)(2)(i) and (b)(2)(ii) to read as follows:

§ 2.6 Trademark fees.

* * * * *

(b) * * *

(1) * * *

* * * * *

(ii) Overnight delivery to PTO Box or overnight fax $6.00

(iii) Expedited service for copy ordered by expedited mail or fax delivery service and delivered to the customer within two work days 25.00

* * * * *

(2) * * *

(i) Regular service 15.00

(ii) Expedited local service 30.00

* * * * *

PART 7—REGISTER OF GOVERNMENT INTERESTS IN PATENTS

1. The authority citation for 37 CFR Part 7 would continue to read as follows:

Authority: E.O. 9424, February 18, 1944, 9 FR 1959; 3 CFR 1943–1948 comp.

2. Section 7.1 is proposed to be revised to read as follows:

§ 7.1 Requirements.

(a) Executive Order 9424 (3 CFR 1943–1948 Comp.) requires the several departments and other executive agencies of the Government, including Government-owned or Government-controlled corporations, to forward promptly to the Commissioner of Patents and Trademarks for recording all licenses, assignments, or other interests of the Government in or under patents or applications for patents.

(b) An instrument relating to a patent must identify the patent by the patent number. An instrument relating to a national patent application must identify the national patent application by the application number (consisting of the series code and the serial number, e.g., 07/123,456) or the serial number

and filing date. An instrument relating to an international patent application which designates the United States of America must identify the international application by the international application number, (e.g., PCT/US90/01234). If an assignment is executed concurrently with, or subsequent to, the execution of the patent application, but before the patent application is filed, it must identify the patent application by its date of execution, name of each inventor, and title of the invention so that there can be no mistake as to the patent application intended.

(c) Each instrument submitted to the Office for recording must be accompanied by at least one cover sheet as specified in paragraph (d) of this section referring to those patent applications and patents against which the instrument is to be recorded. Only one set of instruments and cover sheets to be recorded should be filed. If an instrument to be recorded is not accompanied by a completed cover sheet, the instrument and any incomplete cover sheet will be returned for proper completion of a cover sheet and resubmission of the instrument and a completed cover sheet.

(d) Each cover sheet required by paragraph (c) of this section must contain:

(1) the name of the party conveying the interest;

(2) the name and address of the party receiving the interest;

(3) a description of the interest conveyed or transaction to be recorded;

(4) each application number or patent number against which the instrument is to be recorded, or an indication that the instrument is filed together with a patent application;

(5) the name and address of the party to whom correspondence concerning the request to record the instrument should be mailed;

(6) the number of applications or patents identified in the cover sheet and the total fee;

(7) the date the instrument was executed;

(8) a statement by the party submitting the instrument that to the best of the person's knowledge and belief, the information contained on the cover sheet is true and correct and any copy submitted is a true copy of the original instrument; and

(9) the signature of the party submitting the instrument.

(e) An error in a cover sheet recorded pursuant to this Part will be corrected only if:

(1) the error is apparent when the cover sheet is compared with the recorded instrument to which it pertains, and

(2) a corrected cover sheet accompanied by the recording fee set forth in § 1.21(h) of this chapter and either the original recorded instrument or a copy of the original recorded instrument is filed for recordation.

(f) The Office will accept and record non-English language instruments only if accompanied by a verified English translation signed by the individual making the translation.

(g) Instruments and cover sheets to be recorded should be addressed to the Commissioner of Patents and Trademarks, Box Assignment, Washington, DC 20231.

(h) All requests to record instruments must be accompanied by the recording fee set forth in § 1.21(h) of this chapter. The fee set forth in § 1.21(h) of this chapter is required for each application and patent against which the instrument is recorded as identified in the cover sheet.

Dated: May 19, 1995.

Philip G. Hampton II,

Acting Assistant Secretary of Commerce and Acting Commissioner of Patents and Trademarks.

Note: The following appendix will not appear in the Code of Federal Regulations.

APPENDIX A.—COMPARISON OF EXISTING AND REVISED FEE AMOUNTS

37 CFR Sec.	Description	Pre-Oct 1995	Oct 1995
1.16(a)	Basic Filing Fee	$730	$750
1.16(a)	Basic Filing Fee (Small Entity)	365	375
1.16(b)	Independent Claims	76	78
1.16(b)	Independent Claims (Small Entity)	38	39
1.16(c)	Claims in Excess of 20	22	(1)
1.16(c)	Claims in Excess of 20 (Small Entity)	11	(1)
1.16(d)	Multiple Dependent Claims	240	250
1.16(d)	Multiple Dependent Claims (Small Entity)	120	125
1.16(e)	Surcharge—Late Filing Fee	130	(1)
1.16(e)	Surcharge—Late Filing Fee (Small Entity)	65	(1)
1.16(f)	Design Filing Fee	300	310
1.16(f)	Design Filing Fee (Small Entity)	150	155
1.16(g)	Plant Filing Fee	490	510
1.16(g)	Plant Filing Fee (Small Entity)	245	255
1.16(h)	Reissue Filing Fee	730	750
1.16(h)	Reissue Filing Fee (Small Entity)	365	375
1.16(i)	Reissue Independent Claims	76	78
1.16(i)	Reissue Independent Claims (Small Entity)	38	39
1.16(j)	Reissue Claims in Excess of 20	22	(1)
1.16(j)	Reissue Claims in Excess of 20 (Small Entity)	11	(1)
1.16(k)	Provisional Application Filing Fee	150	(1)
1.16(k)	Provisional Application Filing Fee (Small Entity)	75	(1)
1.16(l)	Surcharge—Incomplete Provisional App. Filed	50	(1)
1.16(l)	Surcharge—Incomplete Provisional App. Filed (Small Entity)	25	(1)
1.17(a)	Extension—First Month	110	(1)
1.17(a)	Extension—First Month (Small Entity)	55	(1)
1.17(b)	Extension—Second Month	370	380
1.17(b)	Extension—Second Month (Small Entity)	185	190
1.17(c)	Extension—Third Month	870	900
1.17(c)	Extension—Third Month (Small Entity)	435	450
1.17(d)	Extension—Fourth Month	1,360	1,400
1.17(d)	Extension—Fourth Month (Small Entity)	680	700
1.17(e)	Notice of Appeal	280	290

APPENDIX A.—COMPARISON OF EXISTING AND REVISED FEE AMOUNTS—Continued

37 CFR Sec.	Description	Pre-Oct 1995	Oct 1995
1.17(e)	Notice of Appeal (Small Entity)	140	145
1.17(f)	Filing a Brief	280	290
1.17(f)	Filing a Brief (Small Entity)	140	145
1.17(g)	Request for Oral Hearing	240	250
1.17(g)	Request for Oral Hearing (Small Entity)	120	125
1.17(h)	Petition—Not All Inventors	130	(1)
1.17(h)	Petition—Correction of Inventorship	130	(1)
1.17(h)	Petition—Decision on Questions	130	(1)
1.17(h)	Petition—Suspend Rules	130	(1)
1.17(h)	Petition—Expedited License	130	(1)
1.17(h)	Petition—Scope of License	130	(1)
1.17(h)	Petition—Retroactive License	130	(1)
1.17(h)	Petition—Refusing Maintenance Fee	130	(1)
1.17(h)	Petition—Refusing Maintenance Fee—Expired Patent	130	(1)
1.17(h)	Petition—Interference	130	(1)
1.17(h)	Petition—Reconsider Interference	130	(1)
1.17(h)	Petition—Late Filing of Interference	130	(1)
1.20(b)	Petition—Correction of Inventorship	130	(1)
1.17(h)	Petition—Refusal to Publish SIR	130	(1)
1.17(i)(1)	Petition—For Assignment	130	(1)
1.17(i)(1)	Petition—For Application	130	(1)
1.17(i)(1)	Petition—Late Priority Papers	130	(1)
1.17(i)(1)	Petition—Suspend Action	130	(1)
1.17(i)(1)	Petition—Divisional Reissues to Issue Separately	130	(1)
1.17(o)(1)	Petition—For Interference Agreement	130	(1)
1.17(i)(1)	Petition—Amendment After Issue	130	(1)
1.17(i)(1)	Petition—Withdrawal After Issue	130	(1)
1.17(i)(1)	Petition—Defer Issue	130	(1)
1.17(i)(1)	Petition—Issue to Assignee	130	(1)
1.17(i)(1)	Petition—Accord a Filing Date Under § 1.53	130	(1)
1.17(i)(1)	Petition—Accord a Filing Date Under § 1.62	130	(1)
1.17(i)(1)	Petition—Make Application Special	130	(1)
1.17(j)	Petition—Public Use Proceeding	1,390	1,430
1.17(k)	Non-English Specification	130	(1)
1.17(l)	Petition—Revive Abandoned Appl	110	(1)
1.17(l)	Petition—Revive Abandoned Appl.(Small Entity)	55	(1)
1.17(m)	Petition—Revive Unintentionally Abandoned Appl	1,210	1,250
1.17(m)	Petition—Revive Unintent Abandoned Appl. (Small Entity)	605	625
1.17(n)	SIR—Prior to Examiner's Action	840	870
1.17(o)	SIR—After to Examiner's Action	1,690	1,740
1.17(p)	Submission of an Information Disclosure Statement (§ 1.97)	210	220
1.17(q)	Petition—Correction of Inventorship (Prov. App.)	50	(1)
1.17(q)	Petition—Accord a filing date (Prov. App.)	50	(1)
1.17(r)	Filing a submission after final rejection (1.129(a))	730	750
1.17(r)	Filing a submission after final rejection (1.129(a)) (Small Entity)	365	375
1.17(s)	Per add'l invention to be examined (1.129(b))	730	750
1.17(s)	Per add'l invention to be examined (1.129(b)) (Small Entity)	365	375
1.18(a)	Issue Fee	1,210	1,250
1.18(a)	Issue Fee (Small Entity)	605	625
1.18(b)	Design Issue Fee	420	430
1.18(b)	Design Issue Fee (Small Entity)	210	215
1.18(c)	Plant Issue Fee	610	630
1.18(c)	Plant Issue Fee (Small Entity)	305	315
1.19(a)(1)(i)	Copy of Patent	3	(1)
1.19(a)(1)(ii)	Patent Copy—Overnight delivery to PTO Box or overnight fax	6	(1)
1.19(a)(1)(iii)	Patent Copy Ordered by Expedited Mail or Fax—Exp. service	25	(1)
1.19(a)(2)	Plant Patent Copy	12	(1)
1.19(a)(3)(i)	Copy of Utility Patent or SIR in Color	24	(1)
1.19(b)(1)(i)	Certified Copy of Patent Application as Filed	12	15
1.19(b)(1)(ii)	Certified Copy of Patent Application as Filed, Expedited	24	30
1.19(b)(2)	Cert of Uncert Copy of Patent-Related File Wrapper/Contents	150	(1)
1.19(b)(3)	Cert. or Uncert. Copies of Office Records, per Document	25	(1)
1.19(b)(4)	For Assignment Records, Abstract of Title and Certification	25	(1)
1.19(c)	Library Service	50	(1)
1.19(d)	List of Patents in Subclass	3	(1)
1.19(e)	Uncertified Statement—Status of Maintenance Fee Payment	10	(1)
1.19(f)	Copy of Non-U.S. Patent Document	25	(1)
1.19(g)	Comparing and Certifying Copies, Per Document, Per Copy	25	(1)
1.19(h)	Duplicate or Corrected Filing Receipt	25	(1)
1.20(a)	Certificate of Correction	100	(1)
1.20(c)	Reexamination	2,320	2,390

APPENDIX A.—COMPARISON OF EXISTING AND REVISED FEE AMOUNTS—Continued

37 CFR Sec.	Description	Pre-Oct 1995	Oct 1995
1.20(d)	Statutory Disclaimer	110	(1)
1.20(d)	Statutory Disclaimer (Small Entity)	55	(1)
1.20(e)	Maintenance Fee—3.5 Years	960	990
1.20(e)	Maintenance Fee—3.5 Years (Small Entity)	480	495
1.20(f)	Maintenance Fee—7.5 Years	1,930	1,990
1.20(f)	Maintenance Fee—7.5 Years (Small Entity)	965	995
1.20(g)	Maintenance Fee—11.5 Years	2,900	2,990
1.20(g)	Maintenance Fee—11.5 Years (Small Entity)	1,450	1,495
1.20(h)	Surcharge—Maintenance Fee—6 Months	130	(1)
1.20(h)	Surcharge—Maintenance Fee—6 Months (Small Entity)	65	(1)
1.20(i)(1)	Surcharge—Maintenance After Expiration—Unavoidable	640	660
1.20(i)(2)	Surcharge—Maintenance After Expiration—Unintentional	1,500	1,550
1.20(j)	Extension of Term of Patent	1,030	1,060
1.21(a)(1)	Admission to Examination	300	310
1.21(a)(2)	Registration to Practice	100	(1)
1.21(a)(3)	Reinstatement to Practice	15	(1)
1.21(a)(4)	Certificate of Good Standing	10	(1)
1.21(a)(4)	Certificat of Good Standing, Suitable Framing	20	(1)
1.21(a)(5)	Review of Decision of Director, OED	130	(1)
1.21(a)(6)	Regrading of Examination	130	(1)
1.21(b)(1)	Establish Deposit Account	10	(1)
1.21(b)(2)	Service Charge Below Minimum Balance	25	(1)
1.21(b)(3)	SErvice Charge Below Minimum Balance	25	(1)
1.21(c)	Filing a Disclosure Document	10	(1)
1.21(d)	Box Rental	50	(1)
1.21(e)	International Type Search Report	40	(1)
1.21(g)	Self-Service Copy Charge	.25	(1)
1.21(h)	Recording Patent Property	40	(1)
1.21(i)	Publication in the OG	25	(1)
1.21(j)	Labor Charges for Services	30	(1)
1.21(k)	Unspecified Other Services	(2)	(1)
1.21(k)	Terminal Use APS–CSIR (per hour)	50	(1)
1.21(m)	Processing Returned Checks	50	(1)
1.21(n)	Handling Fee—Incomplete Application	130	(1)
1.21(o)	Terminal Use APS–TEXT	40	(1)
1.24	Coupons for Patient and Trademark Copies	3	(1)
1.296	Handling Fee—Withdrawal SIR	130	(1)
1.445(a)(1)	Transmittal Fee	210	220
1.445(a)(2)(i)	PCT Search Fee—No U.S. Application	640	660
1.445(a)(2)(ii)	PCT Search Fee—Prior U.S. Application	420	430
1.445(a)(3)	Supplemental Search	180	190
1.482(a)(1)(i)	Preliminary Exam Fee	460	470
1.482(a)(1)(ii)	Preliminary Exam Fee	690	710
1.482(a)(2)(i)	Additional Invention	140	(1)
1.482(a)(2)(ii)	Additional Invention	240	250
1.492(a)(1)	Preliminary Examining Authority	660	680
1.492(a)(1)	Preliminary Examining Authority (Small Entity)	330	340
1.492(a)(2)	Searching Authority	730	750
1.492(a)(2)	Searching Authority (Small Entity)	365	375
1.492(a)(3)	PTO Not ISA nor IPEA	980	1,010
1.492(a)(3)	PTO Not ISA nor IPEA (Small Entity)	490	505
1.492(a)(4)	Claims—IPEA	92	94
1.492(a)(4)	Claims—IPEA (Small Entity)	46	47
1.492(a)(5)	Filing with EPO/JPO Search Report	850	880
1.492(a)(5)	Filing with EPO/JPO Search Report (Small Entity)	425	440
1.492(b)	Claims—Extra Individual (Over 3)	76	78
1.492(b)	Claims—Extra Individual (Over 3) (Small Entity)	38	39
1.492(c)	Claims—Extra Total (Over 20)	22	(1)
1.492(c)	Claims—Extra Total (Over 20) (Small Entity)	11	(1)
1.492(d)	Claims—Multiple Dependents	240	250
1.492(d)	Claims—Multiple Dependents (Small Entity)	120	125
1.492(e)	Surcharge	130	(1)
1.492(e)	Surcharge (Small Entity)	65	(1)
1.492(f)	English Translation—After 20 Months	130	(1)
2.6(a)(1)	Application for Registration, Per Class	245	(1)
2.6(a)(2)	Amendment to Allege Use, Per Class	100	(1)
2.6(a)(3)	Statement of Use, Per Class	100	(1)
2.6(a)(4)	Extension for Filing Statement of Use, Per Class	100	(1)
2.6(a)(5)	Application for Renewal, Per Class	300	(1)
2.6(a)(6)	Surcharge for Late Renewal, Per Class	100	(1)
2.6(a)(7)	Publication of Mark Under § 12(c), Per Class	100	(1)

APPENDIX A.—COMPARISON OF EXISTING AND REVISED FEE AMOUNTS—Continued

37 CFR Sec.	Description	Pre-Oct 1995	Oct 1995
2.6(a)(8)	Issuing New Certificate of Registration	100	(1)
2.6(a)(9)	Certificate of Correction of Registrant 's Error	100	(1)
2.6(a)(10)	Filing Disclaimer to Registration	100	(1)
2.6(a)(11)	Filing Amendment to Registration	100	(1)
2.6(a)(12)	Filing Affidavit Under Section 8, Per Class	100	(1)
2.6(a)(13)	Filing Affidavit Under Section 15, Per Class	100	(1)
2.6(a)(14)	Filing Affidavit Under Sections 8 & 15, Per Class	200	(1)
2.6(a)(15)	Petitions to the Commissioner	100	(1)
2.6(a)(16)	Petition to Cancel, Per Class	200	(1)
2.6(a)(17)	Notice of Opposition, Per Class	200	(1)
2.6(a)(18)	Ex Parte Appeal to the TTAB, Per Class	100	(1)
2.6(a)(19)	Dividing an Application, Per New Application Created	100	(1)
2.6(b)(1)(i)	Copy of Registered Mark	3	(1)
2.6(b)(1)(ii)	Copy of Registered Mark, overnight delivery to PTO box or fax	6	(1)
2.6(b)(1)(iii)	Copy of Reg. Mark Ordered Via Exp. Mail or Fax, Exp. Svc	25	(1)
2.6(b)(2)(i)	Certified Copy of TM Application as Filed	12	15
2.6(b)(2)(ii)	Certified Copy of TM Application as Filed, Expedited	24	30
2.6(b)(3)	Cert. or Uncert. Copy of TM-Related File Wrapper/Contents	50	(1)
2.6(b)(4)(i)	Cert. Copy of Registered Mark, Title or Status	10	(1)
2.6(b)(4)(i)	Cert. Copy of Registered Mark, Title or Status—Expedited	20	(1)
2.6(b)(5)	Certified or Uncertified Copy of TM Records	25	(1)
2.6(b)(6)	Recording Trademark Property, Per Mark, Per Document	40	(1)
2.6(b)(6)	For Second and Subsequent Marks in Same Document	25	(1)
2.6(b)(7)	For Assignment Records, Abstracts of Title and Cert	25	(1)
2.6(b)(8)	Terminal Use X–SEARCH	40	(1)
2.6(b)(9)	Self-Service Copy Charge	0.25	(1)
2.6(b)(10)	Labor Charges for Services	30	(1)
2.6(b)(11)	Unspecified Other Services	(2)	(1)

[1] These fees are not affected by this rulemaking.
[2] Actual cost.

[FR Doc. 95–12751 Filed 5–25–95; 8:45 am]
BILLING CODE 3510–16–M

ENVIRONMENTAL PROTECTION AGENCY

[FRL–5212–3]

40 CFR Parts 51, 52, 60, 61, and 64

Enhanced Monitoring Rule

AGENCY: Environmental Protection Agency.

ACTION: Proposed rule; notice of public meeting.

SUMMARY: Notice is hereby given that EPA will hold a public meeting on May 31, 1995 to discuss EPA's proposed enhanced monitoring rule and potential approaches to restructuring this rulemaking. On October 22, 1993 (58 FR 54648), EPA published a notice of proposed rulemaking that contained proposed rules to govern a new enhanced monitoring program under section 114(a)(3) and related provisions of the Clean Air Act. 58 FR 54648. In light of the President's concerns regarding flexibility and cost-effectiveness, EPA believes that it may be inappropriate to take final action on the rule as proposed. Moreover, EPA believes that it can develop a more cost-effective method of enhanced monitoring that will also meet the statutory requirement of section 114(a)(3). The Agency will use this meeting to obtain the views of interested parties before taking further action in connection with this rulemaking.

DATES: This public meeting will be held on May 31, 1995 from 8:30 a.m. to 4:30 p.m. at the address set forth below.

ADDRESSES: *Meeing location*: The public meeting will be held at the DuPont Plaza Hotel, 1550 New Hampshire Avenue, Washington, DC 20036, telephone 202–483–6000. *Supporting Documents*: Documents related to discussions will be available at the meeting and in the docket discussed below. Subsequent to the meeting, these documents and a summary of the meeting will be available on the Technology Transfer Network, Emission Measurement Technical Information Center Electronic Bulletin Board, telephone 919–541–5742, Internet address TELNET ttnbbs.rtpnc.epa.gov. *Docket*: The Agency has established EPA Air Docket A–91–52 for this rulemaking. This docket is available for public inspection and copying between 8:00 a.m. and 5:30 p.m., Monday through Friday, excluding Government holidays, and is located at EPA Air Docket (LE–131), Room M–1500, Waterside Mall, 401 M Street, SW, Washington, DC 20460.

FOR FURTHER INFORMATION CONTACT: Robin Segall, Office of Air Quality Planning and Standards, 919–541–0893.

SUPPLEMENTARY INFORMATION: On May 1, 1995, EPA received a 60–day extension of the court-ordered deadline in *Sierra Club* v. *Browner*, No. 93–0564 NHJ (D.D.C.), for final promulgation of enhanced monitoring rules in order for the Agency to reassess the approach it has developed and to consider other, alternative approaches. EPA advised the court that during this 60-day period, EPA will determine the best means to accomplish the substantive goals of the enhanced monitoring requirements of the Clean Air Act in a cost-effective manner. EPA also advised the court that it anticipates that it will need a substantially longer extension beyond June 30, 1995, in order to promulgate rules embodying a new approach to enhanced monitoring.

The Agency plans to take a fresh look at enhanced monitoring in light of the President's reform efforts to design performance-based environmental programs that provide industry with the flexibility to comply in cost-effective ways, while requiring accountability for achieving results. EPA had prepared a draft notice of final rulemaking based

upon the proposed enhanced monitoring rule and submitted it to the Office of Management and budget for interagency review under Executive Order 12866. However, in order to provide an opportunity to reevaluate this rulemaking, on April 4, 1995, the Environmental Protection Agency withdrew the draft final enhanced monitoring rule from further review by the Office of Management and Budget. In addition, the Agency has withdrawn 13 proposed example enhanced monitoring protocols that had been placed upon the Technology Transfer Network in anticipation of promulgation of final enhanced monitoring rules, in order to avoid confusion.

One of the first steps the Agency is taking in considering a possible restructured rule is to hold the public meeting on May 31, 1995. At this meeting the Agency will continue to work with representatives from industry, State and local agencies, and environmental groups in developing a rule that meets the objectives of the President's Environmental Regulation Reinvention effort. The meeting will include a number of representative stakeholders that will sit at the main meeting table by invitation. The number of stakeholders who will sit at the table will be limited to 40; the Agency has invited a broad representation of industry, State and local agencies, and environmental organizations to sit at the table. Additional seating at the meeting will be on a first come, first served basis. It is important to note that the Agency is seeking the opinions of all individuals/organizations present and *not* seeking consensus. There will be opportunities for all parties present to offer their views.

The purpose of the meeting will be to explain the Agency's underlying principles and to solicit opinions from stakeholders for formulation of new approaches to enhanced monitoring rules. One approach being considered would be to issue a revised proposed rule in the from of a Compliance Assurance Monitoring (CAM) Rule that would focus on improving current operation and maintenance (O&M) monitoring requirements. An enhanced O&M monitoring protocol would require that a source owner document operation and maintenance of a control device or process operation in accordance with established, reliable operating and maintenance practices and implement any necessary corrective action to ensure that emissions have been reduced. The Agency is also considering combining the periodic monitoring requirements in 40 CFR part 70 with this CAM rule so that all compliance-related monitoring requirements would be integrated in one set of requirements. To facilitate that approach, EPA also will consider the option of using any proposed CAM rule (or publicly released draft of the rule) as interim Agency guidance for implementation of the current periodic monitoring provisions of part 70. EPA will also consider other approaches as part of this review.

Dated: May 22, 1995.

Mary D. Nichols,

Assistant Administrator, Office of Air and Radiation.

[FR Doc. 95–13137 Filed 5–25–95; 8:45 am]

BILLING CODE 6560–50–M

---

40 CFR Part 52

[DC15–1–6358b; FRL–5178–8]

Approval and Promulgation of Air Quality Implementation Plans; for the District of Columbia—Emission Statement Program

AGENCY: Environmental Protection Agency (EPA).

ACTION: Proposed rule.

SUMMARY: EPA proposes to approve the State Implementation Plan (SIP) revision submitted by the District of Columbia for the purpose of establishing an emission statement program for stationary sources of volatile organic compounds (VOCs) and/or nitrogen oxides (NOx). In the final rules section of this **Federal Register**, EPA is approving the District's SIP revision as a direct final rule without prior proposal because the Agency views this as a noncontroversial SIP revision and anticipates no adverse comments. A detailed rationale for the approval is set forth in the direct final rule. If no adverse comments are received in response to this proposed rule, no further activity is contemplated in relation to this proposed rule. If EPA receives adverse comments, the direct final rule will be withdrawn and all public comments received will be addressed in a subsequent final rule based on this proposed rule. EPA will not institute a second comment period on this action. Any parties interested in commenting on this action should do so at this time.

DATES: Comments must be received in writing by June 26, 1995.

ADDRESSES: Written comments on this action should be addressed to Thomas J. Maslany, Director, Air, Radiation, and Toxics Division (3AT00), U.S. Environmental Protection Agency, Region III, 841 Chestnut Building, Philadelphia, Pennsylvania 19107. Copies of the documents relevant to this action are available for public inspection during normal business hours at the Air, Radiation, and Toxics Division, U.S. Environmental Protection Agency, Region III, 841 Chestnut Building, Philadelphia, Pennsylvania 19107; and the District of Columbia Department of the Consumer and Regulatory Affairs, 2100 Martin Luther King Avenue SE., Washington, D.C. 20020.

FOR FURTHER INFORMATION CONTACT: Enid A. Gerena, (3AT14), U.S. Environmental Protection Agency, Air, Radiation, and Toxics Division, 841 Chestnut Building, Philadelphia, Pennsylvania, 19107, (215) 597–8239.

SUPPLEMENTARY INFORMATION: See the information provided in the direct final action of the same title which is located in the rules and regulations section of this **Federal Register**.

List of Subjects in 40 CFR Part 52

Environmental protection, Air pollution control, Hydrocarbons, Incorporation by reference, Intergovernmental relations, Oxides of nitrogen, Ozone, Reporting and recordkeeping requirements.

Authority: 42 U.S.C. 7401–7671q.

Dated: January 25, 1995.

Peter H. Kostmayer,

Regional Administrator, Region III.

[FR Doc. 95–12926 Filed 5–25–95; 8:45 am]

BILLING CODE 6560–50–P

---

40 CFR Part 52

[ID12–1–6992b; FRL -5206–7]

Approval and Promulgation of State Implementation Plans: Idaho

AGENCY: Environmental Protection Agency (EPA).

ACTION: Proposed rule.

SUMMARY: The EPA proposes to approve the State Implementation Plan (SIP) revision submitted by the State of Idaho on April 14, 1992 for the City of Pinehurst PM–10 nonattainment area (59 FR 43745 (August 25, 1994)) as satisfying certain PM–10 planning requirements for the area just outside the City of Pinehurst which was designated nonattainment in January 1994. In the final rules section of this **Federal Register**, the EPA is approving the State's SIP revision as a direct final rule without prior proposal because the Agency views this as a noncontroversial revision amendment and anticipates no adverse comments. A detailed rationale for the approval is set forth in the direct

final rule. If no adverse comments are received in response to this proposed rule, no further activity is contemplated in relation to this rule. If the EPA receives adverse comments, the direct final rule will be withdrawn and all public comments received will be addressed in a subsequent final rule based on this proposed rule. The EPA will not institute a second comment period on this notice.

DATES: Comments on this proposed rule must be received in writing by June 26, 1995.

ADDRESSES: Written comments should be addressed to Montel Livingston, Environmental Protection Specialist (AT–082), Air Programs Section, at the EPA Regional Office listed below. Copies of the documents relevant to this proposed rule are available for public inspection during normal business hours at the following locations. The interested persons wanting to examine these documents should make an appointment with the appropriate office at least 24 hours before the visiting day.

U.S. Environmental Protection Agency, Region 10, Air Programs Section, 1200 6th Avenue, Seattle, WA 98101.

The State of Idaho Division of Environmental Quality, 1410 N. Hilton, Boise, ID 83720.

FOR FURTHER INFORMATION CONTACT: Doug Cole, EPA, Idaho Operations Office, 1435 N. Orchard St., Boise, ID 83706, (208) 334–9555.

SUPPLEMENTARY INFORMATION: See the information provided in the Direct Final action which is located in the Rules Section of this **Federal Register**.

Dated: April 29, 1995.

Chuck Clarke,

Regional Administrator.

[FR Doc. 95–12928 Filed 5–25–95; 8:45 am]

BILLING CODE 6560–50–P

---

40 CFR Part 52

[SIPTRAX No. PA63–1–7032b FRL–5211–2]

Approval and Promulgation of Air Quality Implementation Plans; Commonwealth of Pennsylvania: Proposed Determination of Attainment of Ozone Standard by the Pittsburgh-Beaver Valley and Reading Ozone Nonattainment Areas and Determination Regarding Applicability of Certain Reasonable Further Progress and Attainment Demonstration Requirements

AGENCY: Environmental Protection Agency (EPA).

ACTION: Proposed rule.

SUMMARY: The EPA proposes to determine that the Pittsburgh-Beaver Valley and Reading ozone nonattainment areas have attained the National Ambient Air Quality Standard (NAAQS) for ozone and that certain reasonable further progress and attainment demonstration requirements, along with certain related requirements, of Part D of Title I of the Clean Air Act are not applicable for so long as these areas continue to attain the ozone standard. In the final rules section of this **Federal Register**, EPA is making these determinations without prior proposal. A detailed rationale for the action is set forth in the direct final rule. If no adverse comments are received in response to that direct final rule, no further activity is contemplated in relation to this proposed rule. If EPA receives adverse comments, EPA will withdraw the direct final rule and address the comments in a subsequent final rule based on this proposed rule. EPA will not institute a second comment period on this notice. Any parties interested in commenting on this notice should do so at this time.

DATES: Comments must be received in writing by June 26, 1995.

ADDRESSES: Written comments on this action should be addressed to Marcia L. Spink, Associate Director, Air Programs, Mailcode 3AT00, U.S. Environmental Protection Agency, Region III, 841 Chestnut Building, Philadelphia, Pennsylvania 19107. Copies of the documents relevant to this action are available for public inspection during normal business hours at the Air, Radiation, and Toxics Division, U.S. Environmental Protection Agency, Region III, 841 Chestnut Building, Philadelphia, Pennsylvania 19107.

FOR FURTHER INFORMATION CONTACT: Kathleen Henry, (215) 597–0545.

SUPPLEMENTARY INFORMATION: See the information provided in the direct final action of the same title which is located in the Rules and Regulations Section of this **Federal Register**.

List of Subjects in 40 CFR Part 52

Environmental protection, Air pollution control, Hydrocarbons, Intergovernmental relations, Nitrogen dioxide, Ozone.

Authority: 42 U.S.C. 7401–7671q.

Dated: May 16, 1995.

Stanley Laskowski,

Acting Regional Administrator, Region III.

[FR Doc. 95–13005 Filed 5–25–95; 8:45 am]

BILLING CODE 6560–50–P

40 CFR Parts 55 and 71

[FRL–5211–7]

Federal Operating Permits Program

AGENCY: Environmental Protection Agency (EPA).

ACTION: Notice of cancellation of public hearing.

SUMMARY: On April 27, 1995, the EPA gave notice of the proposed Federal Operating Permits rule and of the opportunity for a public hearing to present oral testimony concerning the proposed rule. Because the sole party that requested a public hearing has withdrawn its request, the public hearing scheduled for May 30, 1995 has been cancelled.

Written comments on the proposed rule will continue to be accepted until June 26, 1995. Send the written comments to the address given below.

Public hearing cancellation: Notice is hereby given that the public hearing originally scheduled for May 30, 1995 has been canceled.

ADDRESS: Comments should be mailed (in duplicate if possible) to: EPA Air Docket (Mail Code 6102), Attn: Docket No. A–93–51, Room M–1500, Waterside Mall, 401 M Street SW, Washington, DC 20460.

FOR FURTHER INFORMATION, CONTACT: Candace Carraway (telephone 919–541–3189), U.S. Environmental Protection Agency, Office of Air Quality Planning and Standards, Information Transfer and Program Integration Division, Mail Drop 12, Research Triangle Park, NC 27711.

Dated: May 23, 1995.

Mary Henigan,

Acting Director, Information Transfer and Program Integration Division.

[FR Doc. 95–13139 Filed 5–25–95; 8:45 am]

BILLING CODE 6560–50–M

FEDERAL COMMUNICATIONS COMMISSION

47 CFR Chapter I

[CC Docket No. 87–124]

Notice of Advisory Committee Meetings

AGENCY: Federal Communications Commission.

ACTION: Notice of meetings.

SUMMARY: This notice is to announce a change in one meeting date of the Federal Communications Commission's (FCC) Hearing Aid Compatibility Negotiated Rulemaking Committee

(Committee). A previous announcement in the **Federal Register** stated that the committee would meet on Tuesday, June 13, 1995. That meeting date has been changed to Thursday, June 15, 1995. The meetings for May 25 and May 30, 1995, are as previously announced.

The committee is meeting as part of the Commission's proceeding In the Matter of Access to Telecommunications Equipment and Services by the Hearing Impaired and Other Disabled Persons. The Committee will provide recommendations to the FCC to be used in the formulation of requirements for hearing aid compatible wireline telephones in work places, hospitals, certain other health care facilities, prisons, hotels and motels. Included among the recommendations will be one on whether to lift the suspension of enforcement of the Commission's rules regarding hearing aid-compatibility. Those rules require that all wireline telephones in all work places, hospitals, certain other health care facilities, prisons, hotels and motels be hearing aid compatible by May 1, 1993 for establishments with 20 or more employees and by May 1, 1994 for establishments with fewer than 20 employees. The scope of the activity of the Committee includes all steps necessary to assemble data, perform analyses, and provide advice to the FCC concerning all of the issues required to address the regulation of wireline telephones which need to be hearing aid-compatible, as discussed in the FCC's public notices.

DATES: May 25, 1995, 9:30 a.m. edt; May 30, 1995, 9:30 a.m, edt; June 15, 1995, 9:30 a.m. edt.

ADDRESSES: The addresses of the meetings are as follows, or as otherwise announced at the meetings: The meeting of May 25 will be held at the Federal Communications Commission, Room 856, 1919 M Street NW, Washington, D.C. 20554. The meeting of May 30 will be held at Eleanor Roosevelt High School, 7601 Hanover Parkway, Greenbelt, MD 20770. The meeting of June 15 will be held at the Federal Communications Commission, Office of Administrative Law Judges, Courtroom 1, Room 224, 2000 L Street, NW., Washington, DC 20554.

FOR FURTHER INFORMATION CONTACT: Committee documents are available through I.T.S. at 202/857–3800. For further information, contact Greg Lipscomb, Designated Federal Officer of the Hearing Aid Compatibility Negotiated Rulemaking Committee, Domestic Services Branch, Domestic Facilities Division, Common Carrier Bureau, Federal Communications Commission, Mail Stop 1600B2, 2025 M Street, NW., Suite 6008, Washington, DC 20054; Voice (202 634–4216; TTY (202) 418–0484; Fax (202) 634–6625; Internet address: glipscom@fcc.gov

SUPPLEMENTARY INFORMATION: In accordance with the Federal Advisory Committee Act, Public law 92–463, as amended, this notice advises interested persons of the remaining meetings of the Committee. This Committee is necessary and in the public interest. The Committee was established by the Federal Communications Commission to bring together significantly affected entities to discuss and to recommend approaches to developing recommendations to the FCC for requirements for hearing aid-compatible wireline telephones in work places, hospitals, certain other health care facilities, prisons, hotels and motels. The FCC solicited nominations for membership on the Committee pursuant to the Negotiated Rulemaking Act of 1990, Public Law 101–648, November 28, 1990, and selected members which are significantly affected by the proposed rules. *See* FCC Public Notices in CC Docket No. 87–124, FCC 94–280, November 7, 1994, and DA 95–791, April 12, 1995; *see also* 59 FR 60343, November 23, 1994; 60 FR 15739, March 27, 1995; and the Commission's Rules at 47 CFR 68.112(b)(1), (3), and (5).

Members of the general public may attend the meetings. The FCC will attempt to accommodate as many people as possible. However, admittance will be limited to the seating available. The public may submit written comments to the Committee. The comments must be submitted two business days before the meeting in which the commenter desires his/her comments to be distributed. In addition, comments at the meeting by parties or entities not represented on the Committee will be permitted to the extent time permits. Comments will be limited to five minutes in length by any one party or entity, and request to make such comments to the Committee in person must be received two business days before the meeting in which the commenter desires to be heard. Requests for comment opportunity, and written comments, should be sent to Greg Lipscomb at the address under **FOR FURTHER INFORMATION CONTACT,** stated above.

Agenda

The planned agendas for the remaining meetings are as follows: Introductory Remarks, Approval of Agenda, Administrative Matters, Documents, Work Program, Decisions, Final Report, Meeting Schedule, Other Business.

Federal Communications Commission.

William F. Caton,

Acting Secretary.

[FR Doc. 95–12958 Filed 5–25–95; 8:45 am]

BILLING CODE 6712–01–M

DEPARTMENT OF TRANSPORTATION

Office of the Secretary

49 CFR Part 10

RIN: 2105–AC05

[Docket No. 48438; Notice 95–6]

Privacy Act; Implementation

AGENCY: Department of Transportation (DOT), Office of the Secretary.

ACTION: Notice of Proposed Rulemaking.

SUMMARY: DOT proposes to amend its rules implementing the Privacy Act of 1974 to exempt from certain provisions of the Act the Coast Guard's Joint Maritime Information Element Support System. Public comment is invited.

DATES: Comments are due June 26, 1995.

ADDRESSES: Comments should be addressed to Documentary Services Division, Attention: Docket Section, Room PL401, Docket No. 48438, Department of Transportation, C–55, Washington, DC 20590. Any person wishing acknowledgment that his/her comments have been received should include a self-addressed stamped postcard. Comments received will be available for public inspection and copying in the Documentary Services Division, Room PL401, Department of Transportation Building, 400 Seventh Street, SW, Washington, DC, from 9 am to 5 pm et Monday through Friday except Federal holidays.

FOR FURTHER INFORMATION CONTACT: Robert I. Ross, Office of the General Counsel, Cπ10, Department of Transportation, Washington, DC 20590, telephone (202) 366–9154, FAX (202) 366–9170.

SUPPLEMENTARY INFORMATION: *1. What is JMIE?* The Joint Maritime Information Element (JMIE) Support System is a multi-agency database of vessel movements around the world that can assist in virtually any maritime support misλsion, including petroleum traffic movement, sea and defense zone surveillance, fisheries operations, and emergency sealift management, as well as prevention of illegal technology transfer, general cargo/commodity smuggling, and illegal immigration. DOTs Coast Guard is one of the

participating agencies and the agency that has been selected by the others asthe Executive Agent to manage the database. All participating agencies will have access to data in the system.

Each record in the database will consist of two parts. The first will cover the vessel; every participating agency will have access to that. That record will refer to a record about the individuals (e.g., owner, master, crew) associλated with that vessel. Only the law enforcement agencies will be able to access that second record. This part of each record comes within the Privacy Act, although the entire record does not. The computer that houses the database has been proλgrammed to grant access only to the law enforcement agencies that are members of JMIE.

2. What agencies are members of JMIE? The following are the members of JMIE; each is designated below by whether it is a law enforcement agency (L), member of the intelligence community (I), or other (O), only those designated '(L)' having direct access to Privacy Act information:

1. Office of National Drug Control Policy—Executive Office of the President (I)
2. Bureau of International Narcotics Matters—Department of State (I)
3. Customs Service—Department of the Treasury (L)
4. Office of Naval Intelligence—Department of Defense (I)
5. Military Sealift Command—Department of Defense (O)
6. Defense Intelligence Agency—Department of Defense (I)
7. National Security Agency—Department of Defense (I)
8. Drug Enforcement Administration—Department of Justice (L)
9. Immigration and Naturalization Service—Department of Justice (L)
10. US National Central Bureau—INTERPOL—Department of Justice (O)
11. Bureau of the Census—Department of Commerce (O)
12. Coast Guard—Department of Transportation (L)
13. Maritime Administration—Department of Transportation (O)
14. Office of Intelligence and Port Security—Department of Energy (I)
15. Central Intelligence Agency (I)

The only members of JMIE that will have direct access to the Privacy Act information that will be maintained as part of JMIE are the following, all of which are criminal law enforcement agencies; shown with each is its principal criminal law enforcement authority:

(1) Customs Service—19 USC 1589a; [1]

(2) Immigration and Naturalization Service—8 USC 1324; [2]

(3) Drug Enforcement Administration—21 USC 878; [3]

(4) Coast Guard—14 USC 89 [4]

1. *General exemption.* Under subsection (j)(2) of the Privacy Act (5 USC 552a(j)(2)), a system of records may be exempted from almost all provisions of the Act, so long as the system: (1) Is maintained by an agency, or a component of an agency, that performs as its principal function any activity pertaining to the enforcement of criminal laws; and (2) contains: (A) Information compiled for the purpose of identifying individual criminal offenders and alleged offenders and consisting only of identifying data and notations of arrests, the nature and disposition of criminal charges, sentencing, confinement, release, and parole and probation status; (B) information compiled for the purpose of a criminal investigation, including reports of informants and investigators, and associated with an identifiable individual; or (C) reports identifiable to an individual compiled at any stage of the process of enforcement of the criminal laws from arrest or indictment through release from supervision. Those provisions of the Act from which such a system may *not* be exempted are subsections (b) (Conditions of Disclosure); (c)(1) and (2) (Accounting of Certain Disclosures); (e)(4)(A) through (F) (Publication of Existence and Character of System); (e)(6) (Ensure Records are Accurate, Relevant, Timely, and Complete), (7) (Restrict Recordkeeping on First Amendment Rights), (9) (Rules of Conduct), (10) (Safeguards), and (11) (Routine Use Publication); and (i) (Criminal Penalties).

DOT proposes to exempt JMIE accordingly.

2. *Specific exemptions.* Under subsection (k) of the Privacy Act (5 USC 552a(k)), qualifying records may be exempted from various provisions of the Act. Among these provisions are the requirement in subsection (c)(3) to maintain an accounting of disclosures of information from a system of records and make that accounting available on request to the record subject; in subsection (d) to grant to a record subject access to information maintained on him/her under the Act; in subsection (e)(1) to maintain only such information as is relevant and necessary to accomplish a purpose of the agency under statute or Executive Order; in subsection (e)(4)(G), (H), and (I) to advise record subjects of the agency procedures to request if a system of records contains records pertaining to them, how they can gain access to such records and contest their content, and the categories of sources of such records; and in subsection (f) to establish rules governing the procedures above.

a. Under subsection (k)(1) of the Privacy Act (5 USC 552a(k)(1)), portions of a system of records that are subject to 5 USC 552(b)(1), in that they contain information that is properly classified in the interest of national security, may be exempted from these provisions, and DOT proposes to exempt JMIE accordingly.

---

[1] Enforcement authority of customs officers.

Subject to the direction of the Secretary of the Treasury, an officer of the customs may—

(1) carry a firearm;

(2) execute and serve any order, warrant, subpoena, summons, or other process issued under the authority of the United States;

(3) make an arrest without a warrant for any offense against the United States committed in the officer's presence or for a felony, cognizable under the laws of the United States committed outside the officer's presence if the officer has reasonable grounds to believe that the person to be arrested has committed or is committing a felony;

(4) perform any other law enforcement duty that the Secretary of the Treasury may designate.

[2] Bringing in and harboring certain aliens.

(c) *Authority to arrest.* No officer or person shall have authority to make any arrest for a violation of any provision of this section except officers and employees of the [Immigration and Naturalization] Service designated by the Attorney General, either individually or as a member of a class, and all other officers whose duty it is to enforce criminal laws.

[3] Powers of enforcement personnel.

(a) Officers or employees of the Drug Enforcement Administration or any State or local law enforcement officer.

Any officer or employee of the Drug Enforcement Administration or any State or local law enforcement officer designated by the Attorney General may—

(1) carry firearms;

(2) execute and serve search warrants, arrest warrants, administrative inspection warrants, subpoenas, and summonses issued under the authority of the United States;

(3) make arrests without warrant (A) for any offense against the United States committed in his presence, or (B) for any felony, cognizable under the laws of the United States, if he has probable cause to believe that the person to be arrested has committed or is committing a felony;

(4) make seizures of property pursuant to the provisions of this subchapter; and

(5) perform such other law enforcement duties as the Attorney General may designate.

* * * * *

[4] Law enforcement.

(a) The Coast Guard may make inquiries, examinations, inspections, searches, seizures, and arrests upon the high seas and waters over which the United States has jurisdiction, for the prevention, detection, and suppression of violations of laws of the United States. * * * When * * * it appears that a breach of the laws of the United States rendering a person liable to arrest is being, or has been committed, by any person, such person shall be arrested or, if escaping to shore, shall be immediately pursued and arrested on shore, or other lawful and appropriate action shall be taken * * * .

* * * * *

b. Under subsection (k)(2) of the Privacy Act (5 USC 552a(k)(2)), investigatory material compiled for law enforcement purposes, other than material encompassed within subsection (j)(2), may be exempted from these provisions, and DOT proposes to exempt JMIE accordingly.

Analysis of regulatory impacts. This amendment is not a ''significant regulatory action'' within the meaning of Executive Order 12866. It is also not significant within the definition in DOT's Regulatory Policies and Procedures, 49 FR 11034 (1979), in part because it does not involve any change in important Departmental policies. Because the economic impact should be minimal, further regulatory evaluation is not necessary. Moreover, I certify that this proposal will not have a significant economic impact on a substantial number of small entities.

This proposal does not significantly affect the environment, and therefore an environmental impact statement is not required under the National Environmental Policy Act of 1969. It has also been reviewed under Executive Order 12612, Federalism, and it has been determined that it does not have sufficient implications for federalism to warrant preparation of a Federalism Assessment.

Finally, the proposal does not contain any collection of information requirements, requiring review under the Paperwork Reduction Act of 1980.

List of Subjects in 49 CFR Part 10:

Penalties; Privacy.

In accordance with the above, DOT proposes to amend 49 CFR part 10 as follows:

PART 10—[AMENDED]

1. The authority citation to part 10 would remain as follows:

Authority: 5 USC 552a; 49 USC 322.

2. Part I of Appendix A would be amended by republishing the introductory text and by adding a new paragraph F; Part II.A would be amended by adding a new paragraph 14; and Part II.F would be amended by adding a new paragraph 4, all to read as follows:

Appendix A to Part 10—Exemptions

Part I. General exemptions. Those portions of the following systems of records that consist of (a) information compiled for the purpose of identifying individual criminal offenders and alleged offenders and consisting only of identifying data and notations of arrests, the nature and disposition of criminal charges, sentencing, confinement, release, and parole and probation status; (b) information compiled for the purpose of a criminal investigation, including reports of informants and investigators, and associated with an identifiable individual; or (c) reports identifiable to an individual compiled at any stage of the process of enforcement of the criminal laws from arrest or indictment through release from supervision, are exempt from all parts of 5 USC 552a except subsections (b) (Conditions of disclosure); (c)(1) and (2) (Accounting of certain disclosures); (e)(4)(A) through (F) (Publication of existence and character of system); (e)(6) (Ensure records are accurate, relevant, timely, and complete before disclosure to person other than an agency and other than pursuant to a Freedom of Information Act request), (7) (Restrict recordkeeping on First Amendment rights), (9) (Rules of conduct), (10) (Safeguards), and (11) (Routine use publication); and (i) (Criminal penalties):

* * * * *

F. Joint Maritime Intelligence Element (JMIE) Support System, maintained by the Operations Systems Center, U.S. Coast Guard (DOT/CG 642).

Part II. Specific exemptions.

A. The following systems of records are exempt from subsection (c)(3) (Accounting of Certain Disclosures), (d) (Access to Records), (e)(4)(G), (H), and (I) (Agency Requirements), and (f) (Agency Rules) of 5 USC 552a, to the extent that they contain investigatory material compiled for law enforcement purposes in accordance with 5 USC 552a(k)(2):

* * * * *

14. Joint Maritime Intelligence Element (JMIE) Support System, maintained by the Operations Systems Center, U.S. Coast Guard (DOT/CG 642).

* * * * *

F. Those portions of the following systems of records that consist of information properly classified in the interest of national defense or foreign policy in accordance with 5 USC 552(b)(1) are exempt from sections (c)(3) (Accounting of Certain Disclosures), (d) (Access to Records), (e)(4)(G), (H), and (I) (Agency Requirements), and (f) (Agency Rules) of 5 USC 552a, to the extent that they contain investigatory material compiled for law enforcement purposes in accordance with 5 USC 552a(k)(1):

* * * * *

4. Joint Maritime Intelligence Element (JMIE) Support System, maintained by the Operations Systems Center, U. S. Coast Guard (DOT/CG 642).

Issued in Washington, DC, on May 19, 1995.

Federico Peña,

Secretary of Transportation.

[FR Doc. 95–12833 Filed 5–25–95; 8:45 am]

BILLING CODE 4910–62–P

Research and Special Programs Administration

49 CFR Part 195

[Docket PS–140]

RIN 2137–AC34

Areas Unusually Sensitive to Environmental Damage

AGENCY: Research and Special Programs Administration (RSPA), DOT.

ACTION: Public workshop notice.

SUMMARY: RSPA invites industry, State and local government representatives and the public to a workshop on unusually sensitive environmental areas. The workshop's purpose is to openly discuss the criteria being considered by RSPA to determine areas unusually sensitive to environmental damage from a hazardous liquid pipeline release. The criteria are needed to carry out statutory requirements.

DATES: The workshop will be held on June 15, 1995 from 8:30 a.m. to 4 p.m. and on June 16, 1995 from 8:30 a.m. to 12 p.m. Persons who want to participate in the workshop should call (703) 267–3666 or e-mail their name, affiliation, and phone number to jbusavag@walcoff.com as space is limited. Persons who are unable to attend may submit written comments in duplicate by June 26, 1995. Interested persons should submit as part of their written comments all material that is relevant to a statement of fact or argument.

ADDRESSES: The workshop will be held at the U.S. Department of Transportation, Nassif Building, 400 Seventh Street SW., Room 2230, Washington, DC. Non-federal employee visitors are admitted into the DOT headquarters building through the southwest entrance at Seventh and E Streets, SW.

Written comments must be submitted in duplicate and mailed or hand delivered to the Dockets Unit, Room 8421, U.S. Department of Transportation, 400 Seventh Street, SW., Washington, DC 20590–0001. Please refer to the docket and notice numbers stated in the heading of this notice.

All comments and materials cited in this document will be available for inspection and copying in Room 8421 between 8:30 a.m. and 4:30 p.m. each business day. A transcript of the workshop will be available from the Dockets Unit about three weeks after the workshop.

FOR FURTHER INFORMATION CONTACT: Christina Sames, (202) 366–4561, about

this document, or the Dockets Unit, (202) 366–5046, for copies of this document or other materials in the docket.

SUPPLEMENTARY INFORMATION:

49 U.S.C. 60109 and 60102

49 U.S.C. 60109 requires the Secretary of Transportation (Secretary) to:

- Consult with the Environmental Protection Agency (EPA) and describe areas that are unusually sensitive to environmental damage if there is a hazardous liquid pipeline accident, and
- Establish criteria for identifying each hazardous liquid pipeline facility and gathering line, whether otherwise subject to regulation, located in an area unusually sensitive to environmental damage in the event of a pipeline accident.

In describing areas that are unusually sensitive to environmental damage, the Secretary is to consider:

- Earthquake zones and areas subject to substantial ground movements, such as landslides;
- Areas where ground water contamination would be likely if a pipeline facility ruptures;
- Freshwater lakes, rivers, and waterways; and
- River deltas and other areas subject to soil erosion or subsidence from flooding or other water action, where pipeline facilities are likely to be exposed or undermined.

Identification of these unusually sensitive environment areas will be used by RSPA in future rulemakings that are directed at such areas. For instance, 49 U.S.C. 60109 (a)(2) directs the Secretary to require operators to identify unusually sensitive environmental areas through maps and pipeline inventories. 49 U.S.C. 60102(f)(2) requires the Secretary to require each pipeline in an unusually sensitive environmental area to be inspected periodically and to prescribe when an instrumented internal inspection device should be used to inspect the pipeline.

Purpose of Workshop

The purpose of the public workshop is for RSPA and participants to interactively discuss areas unusually sensitive to environmental damage from a hazardous liquid pipeline release and will focus on the following:

1. How to establish criteria which will narrow the number of unusually sensitive environmental areas for pipeline safety purposes.
2. How to establish a process which operators can use to identify, using readily available data, which of their pipeline facilities are located in an unusually sensitive environmental area.
3. How can RSPA and other Federal and State agencies facilitate the identification of pipeline facilities in unusually sensitive environmental areas in a timely and cost beneficial manner.

Problem

There is not a national process to define environmentally sensitive areas for Federal, State, and local governments. Many Federal, State, and local laws refer to environmentally sensitive areas for protection from various actions. The environmentally sensitive area definitions these government agencies have created could be interpreted to include most of the United States.

To meet the intent of 49 U.S.C. 60109 without creating an undue burden on the pipeline industry, RSPA believes a narrow, risk-based definition for unusually sensitive areas is required. Therefore, RSPA is considering an approach that builds on values other Federal agencies have established for activities required under the Oil Pollution Act of 1990, but that more narrowly identifies areas that are unusually sensitive to environmental damage from a hazardous liquid pipeline release.

RSPA believes operators should be given credit for equipping their pipeline systems to quickly detect and respond to a hazardous liquid release. RSPA also believes operators should be allowed to determine the areas that could reasonably be expected to be significantly affected if there were a hazardous liquid release from their pipeline. Therefore, RSPA is considering including only those areas where a release of hazardous liquid would reach the area before the release was contained or before the area was protected as unusually sensitive to environmental damage from a hazardous liquid pipeline release.

To establish clear priorities for protecting a large number of areas, RSPA is considering three tiers of unusually sensitive areas. Tier One, areas that could affect human health if contaminated, would be considered the most sensitive and the highest priority areas. Tier Two, unusually sensitive areas along surface water, would be the second highest priority. Tier Three, unusually sensitive areas within terrestrial environments, would be the third highest priority. RSPA believes the three tiers could be phased in to give operators more time to determine the unusually sensitive areas that could be affected by a hazardous liquid pipeline release. This will reduce the burden on industry and will give RSPA time to work with other government agencies to help determine unusually sensitive areas.

The following explains the criteria under each of the tiers being considered for identifying areas unusually sensitive to environmental damage from a hazardous liquid pipeline release. RSPA invites discussion on all topics addressed in this public workshop notice.

1. Tier One: Areas That Could Affect Human Health if Contaminated

A. Intakes for Community Drinking Water Systems

Public safety is RSPA's number one concern. A hazardous liquid pipeline failure can threaten human health if the hazardous liquid enters a community's drinking water system. Therefore, intakes for community water systems, as defined in the Safe Drinking Water Act regulations, 40 CFR 141.2, that a hazardous liquid pipeline accident could reasonably be expected to affect, are the highest priority in the definition being considered.

The potential risk to a community water system is greatly reduced when a pipeline system is equipped to quickly detect and respond to a hazardous liquid release. A pipeline system's ability to contain a hazardous liquid release before the liquid reaches a community water system intake greatly minimizes the contamination risk. Prompt detection of a hazardous liquid release and prompt notification of water authorities allows for the shut down of the community water intakes that could reasonably be expected to be affected until the danger of hazardous liquid contamination passes. Therefore, only community water system intakes where water currents, topography, or other factors could carry a hazardous liquid release to the community water intake zone before the hazardous liquid is contained or before the community water system intake is closed would be considered unusually sensitive environmental areas.

B. Sole Source Aquifers

EPA defines a sole source aquifer as one that supplies at least half of the drinking water consumed in the area above the aquifer. EPA guidelines state that designated sole source aquifer areas have no alternative sources or combination of sources that could physically, legally, and economically supply all those who get their drinking water from the aquifer.

A hazardous liquid pipeline failure can threaten human health if the hazardous liquid enters a sole source aquifer. Therefore, RSPA believes that

EPA designated sole source aquifers should be considered when determining areas unusually sensitive to environmental damage from a hazardous liquid pipeline accident.

RSPA realizes that not all sole source aquifers could reasonably be expected to be significantly affected by a hazardous liquid pipeline accident. A hazardous liquid release's ability to affect a sole source aquifer will depend on many factors, including the aquifer's depth, the soil's permeability, the geologic formations surrounding the aquifer, and the amount of hazardous liquid that could be discharged. RSPA believes that only sole source aquifers that a hazardous liquid pipeline accident could reasonably be expected to significantly affect should be considered areas unusually sensitive to environmental damage from a hazardous liquid pipeline accident.

2. Tier Two: Unusually Sensitive Areas Along Surface Water

Surface water will carry a discharge from a hazardous liquid pipeline to community drinking water systems and to other areas unusually sensitive to environmental damage. Because surface water covers a large portion of the United States and not all areas in a body of water and along the water's edge have the same environmental sensitivity, RSPA is considering a risk-based approach to identify the areas along surface water that are unusually sensitive to environmental damage from a hazardous liquid pipeline release. In order to prioritize areas of greatest environmental concern, this approach takes into account the surface water habitat's natural ability to restore itself to the condition that existed before the release, and the biological and human use resources in the body of water and along the water's edge.

RSPA is considering two categories of surface water to determine areas unusually sensitive to environmental damage: (A) intertidal, large and medium rivers, and large lakes and (B) small rivers and lakes, streams, ponds, and other surface water. RSPA believes that Tier Two could be phased in after Tier One (The identification of areas that could affect human health if contaminated) is completed. This will reduce the burden on industry and will give RSPA time to work with other government agencies to help determine the unusually sensitive areas along surface water.

A. Intertidal, Large and Medium Rivers, and Large Lakes

The National Oceanic and Atmospheric Association (NOAA) and the EPA have developed a ten point scale that ranks estuarine, lacustrine, and medium and large sized riverine shoreline habitat sensitivity to oil spills (see Table 1). This scale is based on their studies of oil spills' effects on shoreline habitats. The ten point scale ranks habitats according to their sensitivity to an oil spill, natural persistence of oil, and ease of cleanup. RSPA believes this criteria should be used to rank the habitats along intertidal waters, large and medium rivers, and large lakes that a hazardous liquid pipeline release could affect. NOAA and EPA have identified large lakes as those large enough to form natural, wave built beaches (where the distance over which the wind blows to generate waves is long enough, and thus the wind-generated waves are large enough, to form beaches along the shoreline).

Resource areas, including biological and human-use, need to be considered to narrowly determine areas that are unusually sensitive to environmental damage from a hazardous liquid pipeline accident. Biological resource areas may include critical habitats for endangered or threatened species, critical nesting and spawning areas, and wilderness areas. Human-use resources may include officially designated natural resource management areas, resource extraction sites, high recreational use and access areas, and archeological and cultural sites.

RSPA believes that the shoreline habitat, the biological resource areas, and the human use resources should be evaluated to determine if an area is unusually sensitive to environmental damage. Table 2 outlines a list of areas to be considered. Directly below each area is a numerical sensitivity rating to be considered. An operator would determine if an area is unusually sensitive to environmental damage by determining the habitat's sensitivity ranking (Table 2, column 1), the biological resource area ranking (Table 2, column 2), and the human-use resource area ranking (Table 2, column 3). Combining the habitat, the biological resource area, and the human use resource area rankings determines if an area is unusually sensitive. RSPA believes that areas with a combined numerical ranking of 15 points or more should be considered unusually sensitive.

B. Small Rivers and Lakes, Streams, Ponds, and Other Surface Water

As one progresses landward up major rivers, the streams, ponds, and wetlands become so narrow and shallow that even small spills may contaminate the whole system. NOAA and EPA have recommended as a cut off the point where a 20,000 gallon spill would affect the water body from bank to bank and the entire water column. From this point on upstream, it is not useful to classify the habitat sensitivity of sections along the water way. Therefore, RSPA is considering the entire watershed upstream of the point on the main stream where the habitat sensitivity ranking is no longer useful as a single habitat sensitivity, and that the entire watershed upstream of this point be given a habitat ranking of 9 points.

RSPA believes that the biological resource areas and the human use resources within the watershed upstream of the cutoff point should be evaluated to determine if an area is unusually sensitive to environmental damage. Table 3 outlines a list of areas to be considered. This list of areas is identical to the list of areas in Table 2, columns 2 and 3. Directly below each area is a numerical sensitivity rating. An operator would determine if an area is unusually sensitive to environmental damage by determining the biological resource area ranking (Table 3, column 1) and human-use resource area ranking (Table 3, column 2) within the watershed area. Combining the habitat ranking of 9 points, the biological resource area ranking, and the human use resource ranking determines if an area is unusually sensitive; areas with a combined numerical ranking of 15 points or more would be considered unusually sensitive.

3. Unusually Sensitive Areas Within Terrestrial Environments

RSPA is considering an approach for identifying unusually sensitive environmental areas in terrestrial environments that is similar to the approach for identifying unusually sensitive environmental areas along surface water. RSPA believes that the biological resource areas and the human use resources should be studied to determine if a given area is unusually sensitive to environmental damage from a hazardous liquid pipeline accident. However, RSPA believes the terrestrial habitat's sensitivity should not be ranked for its natural ability to restore itself to the condition that existed before the release. Therefore, only the biological resource areas and the human use resource areas would be studied to determine if a given area is unusually sensitive to environmental damage from a hazardous liquid pipeline release.

Table 4 recommends a list of areas to consider. Directly below each area is a numerical sensitivity rating. An operator would determine if an area is unusually sensitive to environmental

damage by evaluating the biological resource area and the human-use resource area rankings. Combining these two rankings, biological resource area ranking and human use resource area ranking, determines if an area is unusually sensitive. Areas with a combined numerical ranking of 11 points or more would be considered unusually sensitive to environmental damage from a hazardous liquid pipeline accident.

RSPA believes that Tier Three could be phased in after Tier One (the identification of areas that could affect human health if contaminated) and Tier Two (Unusually sensitive areas along surface water) are completed. This will reduce the burden on industry and will give RSPA time to work with other government agencies to help determine the unusually sensitive areas within terrestrial environments.

RSPA invites discussion on all topics addressed in this public workshop notice. Anticipated topics to be discussed at the public meeting include, but are not limited to:

(1) The three tiers of unusually sensitive environmental areas.

(2) The criteria being considered for community drinking water systems and sole source aquifers.

(3) The sensitivity ranking of the biological and human use resource areas.

(4) Whether the criteria are specific enough to allow operators to identify areas unusually sensitive to environmental damage from a release of hazardous liquid from their pipeline.

(5) Whether additional criteria are needed to identify unusually sensitive environmental areas.

Issued in Washington, DC on May 22, 1995.

Cesar DeLeon,

Acting Associate Administrator for Pipeline Safety.

TABLE 1.—HABITAT RANKINGS BEING CONSIDERED

Habitat ranking	Estuarine [1]	Lacustrine [2]	Riverine (Large rivers)
10A	Saltwater marshes		
10B	Mangroves		
10C	Freshwater marshes	Freshwater marshes	Freshwater marshes.
10D	Freshwater swamps	Freshwater swamps	Freshwater swamps.
9A	Sheltered tidal flats	Sheltered vegetated low banks	Vegetated low banks.
9B		Sheltered sand/mud flats	Muddy substances (unvegetated).
8A	Sheltered rocky shores	Sheltered scarps in bedrock	Vegetated, steeply sloping bluffs.
8B	Sheltered man-made structures	Sheltered man-made structures	Sheltered man-made structures.
7	Exposed tidal flats	Exposed flats	Not present.
6A	Gravel beaches	Gravel beaches	Gravel bars and gently sloping banks.
6B	Riprap structures	Riprap structures	Riprap structures.
5	Mixed sand and gravel beaches	Mixed sand and gravel beaches	Mixed sand and gravel beaches.
4	Course-grained sand beaches	Sand beaches	Sandy bars and gently sloping banks.
3	Fine-grained sand beaches	Eroding scarps in unconsolidated sediment.	Exposed, eroding banks in unconsolidated sediments.
2	Wave-cut platforms in bedrock	Shelving bedrock shores	Rocky shoals; bedrock ledges.
1A	Exposed rocky shores	Exposed rocky cliffs	Exposed rocky banks.
1B	Exposed seawalls	Exposed, hard man-made structures	Vertical, solid revetments.

[1] Semi-enclosed coastal waters that are under tidal influence and have a free connection to the adjacent ocean waters.
[2] Generally standing water, with open water exceeding 30% of the system.

TABLE 2.—CRITERIA BEING CONSIDERED FOR DETERMINING UNUSUALLY SENSITIVE AREAS ALONG INTERTIDAL, LARGE AND MEDIUM RIVERS, AND LARGE LAKES

Habitat rankings estuarine, lacustrine, and riverine environments	Biological resource areas	Human use resource areas
Estuarine Environments: Saltwater and freshwater marshes Freshwater swamps Mangroves Lacustrine and Riverine Environments: Freshwater marshes and swamps 10 points	Critical habitats for Federally designated Endangered or Threatened Species as defined in 50 CFR 424.02 10 points	
Estuarine Environments: Sheltered tidal flats Lacustrine Environments: Sheltered vegetated low banks Sheltered sand/mud flats Riverine Environments: Vegetated low banks Muddy substances 9 points	Critical areas identified under the Clean Lakes Program Sensitive areas identified under National Estuary Program or Near Coastal Waters Program 9 points	
Estuarine Environments: Sheltered rocky shores Sheltered man-made structures Lacustrine Environments: Sheltered scarps in bedrock Sheltered man-made structures Reverine Environments:	Habitats Federal or State designated Endangered or Threatened Species are known to use Spawning areas critical for maintaining fish or shellfish	

TABLE 2.—CRITERIA BEING CONSIDERED FOR DETERMINING UNUSUALLY SENSITIVE AREAS ALONG INTERTIDAL, LARGE AND MEDIUM RIVERS, AND LARGE LAKES—Continued

Habitat rankings estuarine, lacustrine, and riverine environments	Biological resource areas	Human use resource areas
Vegetated, steeply sloping bluffs		
8 points	8 points	
Estuarine Environments:	National Sanctuaries	Officially designated natural resource managed areas: National Parks.
Exposed tidal flats		
Lacustrine Environments:	National State and Wildlife Refuges	National Conservation Areas
Exposed flats		
Riverine Environments:	National Wildlife Management Areas	Natural Heritage Areas.
Not present		
	Terrestrial areas large or dense groups or numbers of animals use to breed	National Preserves and Reserves.
7 points	7 points	
Estuarine and Lacustrine Environments:	Designated Federal Wilderness Areas	Archeological and cultural sites a Federal or State government agency identifies and protects.
Gravel beaches		
Riprap structures		
Riverine Environments:	Federal or State designated Scenic or Wild River	Native lands.
Gravel bars and gently sloping banks		
Riprap structures		
6 points	6 points	
Estuarine and Lacustrine Environments:	State land designated for protecting and maintaining aquatic life	Resource extraction sites, such as subsistence sites, commercial fisheries areas, aquaculture sites, reservoirs, and other water resource areas.
Mixed sand and gravel beaches		
5 points	5 points	
Estuarine Environments:	State land designated to manage wildlife or game	High recreational use areas:
Coarse-grained sand beaches		National Recreational Areas.
Lacustrine Environments:		National Monuments.
Sand beaches		Sandy bars and gently sloping banks
4 points	4 points	
Estuarine Environments:	State designated natural areas	
Fine-grained sand beaches		
Lacustrine Environments:	National Forest System	
Eroding scarps in unconsolidated sediment		
Riverine Environments:		
Exposed, eroding banks in unconcolidated sediments		
3 points	3 points	
Estuarine Environments:		
Wave-cut platforms in bedrock		
Lacustrine Environments:		
Shelving bedrock shores		
Riverine Environments:		
Rocky shoals, bedrock ledges		
2 points		
Estuarine Environments:		
Exposed rocky shores		
Exposed seawalls		
Lacustrine Environments:		
Exposed rocky cliffs		
Exposed, hard man-made structures		
Riverine Environments:		
Exposed rocky banks		
Vertical, solid revetments		
1 point		

TABLE 3.—CRITERIA BEING CONSIDERED FOR DETERMINING UNUSUALLY SENSITIVE AREAS ALONG SMALL RIVERS AND LAKES, STREAMS, PONDS, ETC.

Biological resource areas	Human use resource areas
Critical habitats for Federally designated Endangered or Threatened Species as defined in 50 CFR 424.02	
10 points	
Critical areas identified under the Clean Lakes Program	
Sensitive areas identified under National Estuary Program or Near Coastal Waters Program	

TABLE 3.—CRITERIA BEING CONSIDERED FOR DETERMINING UNUSUALLY SENSITIVE AREAS ALONG SMALL RIVERS AND LAKES, STREAMS, PONDS, ETC.—Continued

Biological resource areas	Human use resource areas
9 points	
Habitats Federal or State designated Endangered or Threatened Species are known to use	
Spawning areas critical for maintaining fish or shellfish	
8 points	
National Sanctuaries	Officially designated natural resource management areas: National Parks. National Conservation Areas. Natural Heritage Areas. National Preserves and Reserves.
National and State Wildlife Refuges	
National Wildlife Management Areas	
Terrestrial areas large or dense groups or numbers of animals use to breed	
7 points	7 points
Designated Federal Wilderness Areas	Archeological and cultural sites a Federal or State government agency identifies and protects.
Federal or State designated Scenic or Wild River	Native lands.
6 points	6 points
State land designated for protecting and maintaining aquatic life	Resource extraction sites, such as subsistence sites, commercial fisheries areas, aquaculture sites, reservoirs, and other water resource areas.
Research natural areas.	
5 points	5 points
State land designated to manage wildlife or game	High recreational use areas: National Recreational Areas. National Monuments. State Parks.
4 points	4 points
State designated natural areas	
National Forest System	
3 points	

TABLE 4.—CRITERIA BEING CONSIDERED FOR DETERMINING UNUSUALLY SENSITIVE WITHIN TERRESTRIAL ENVIRONMENTS

Biological resource areas	Human use resource areas
Critical habitats for Federally designated Endangered or Threatened Species as defined in 50 CFR 424.02	
10 points	
Habitats Federal or State designated Endangered or Threatened Species are known to use	
Spawning areas critical for maintaining fish or shellfish	
8 points	
National Sanctuaries	Officially designated natural resource management areas:
National and State Wildlife Refuges	National Parks. National Conservation Areas.
National Wildlife Management Areas	Natural Heritage Areas.
Terrestrial areas large or dense groups or numbers of animals use to breed	National Preserves and Reserves.
7 points	7 points
Designated Federal Wilderness Areas	Archeological and cultural sites a Federal or State government agency identifies and protects.
	Native lands.
6 points	6 points
Research natural areas	
5 points	
State land designated to manage wildlife or game	High recreational use areas: National Recreational Areas. National Monuments. State Parks.
4 points	4 points
State designated natural areas	
National Forest System	
3 points	

[FR Doc. 95–12964 Filed 5–25–95; 8:45 am]
BILLING CODE 4910–60–P

DEPARTMENT OF THE INTERIOR

Fish and Wildlife Service

50 CFR Part 17

Endangered and Threatened Wildlife and Plants; 90-day Finding for a Petition To List the Wood Turtle (Clemmys Insculpta) as Threatened

AGENCY: Fish and Wildlife Service, Interior.

ACTION: Notice of 90-day petition finding.

SUMMARY: The U.S. Fish and Wildlife Service (Service) announces a 90-day finding for a petition to list the wood turtle (*Clemmys insculpta*) as a threatened species throughout its historic range in the coterminous United States under the Endangered Species Act of 1973, as amended. The Service finds that the petition does not present substantial scientific or commercial information indicating that listing this species may be warranted.

DATES: The finding announced in this document was made on May 16, 1995.

ADDRESSES: Submit data, information, comments or questions concerning this petition to the Field Supervisor, New England Field Office, U.S. Fish and Wildlife Service, 22 Bridge Street, Concord, New Hampshire 03301. The petition finding, supporting data, and comments are available for public inspection, by appointment, during normal business hours at the address listed above.

FOR FURTHER INFORMATION CONTACT: Michael Amaral at the above address (603–225–1411); Paul Nickerson at U.S. Fish and Wildlife Service, Regional Office, 300 Westgate Center Drive, Hadley, Massachusetts 01035 (telephone 413–253–8615); or Robert Adair, U.S. Fish and Wildlife Service, Federal Building, Fort Snelling, Twin Cities, Minnesota, 55111 (telephone 612–725–3500).

SUPPLEMENTARY INFORMATION:

Background

Section 4(b)(3)(A) of the Endangered Species Act (Act) of 1973, as amended (16 U.S.C. 1531 *et seq.*), requires that the Service make a finding on whether a petition to list, delist, or reclassify a species presents substantial scientific or commercial information to demonstrate that the petitioned action may be warranted. This finding is to be based on all information available to the Service at the time. To the maximum extent practicable, this finding is to be made within 90 days of receipt of the petition, and the finding is to be published promptly in the **Federal Register**.

The Service has made a 90-day finding on a petition to list the wood turtle (*Clemmys insculpta*) as threatened and to determine critical habitat. The petition, dated December 27, 1994, was submitted to the Service by Restore The North Woods of Concord, Massachusetts, the Biodiversity Legal Foundation, and six individual co-petitioners and was received by the Service on December 29, 1994. In a letter dated January 10, 1995, Restore provided two additional documents to the petition record. This information was received by the Service on January 12, 1995. The petitioners contend that the species has undergone a precipitous decline throughout its range, that there are a number of threats to the species which will cause further declines, and, therefore, that urgent protective measures are necessary.

The Service has carefully reviewed the petition, the literature cited in the petition, recent information submitted by State wildlife agencies and other knowledgeable individuals, and all other information currently available in the Service's files. On the basis of the best scientific and commercial information available, the Service finds the petition does not present substantial information that listing this species may be warranted. This finding is based on the inadequacy of existing data to support the contention that the wood turtle has undergone rangewide decline or that the threats identified in the petition are affecting wood turtle populations across all or a significant portion of its range to the extent that the species is likely to become an endangered species in the foreseeable future.

The following is a summary of the information available on the species' current status. The wood turtle occurs in all of the States within its recent historic range (colonial settlement to present); appears to be well distributed within a number of those States, i.e., Connecticut, Pennsylvania, Maine, Vermont, Maryland, Massachusetts and New York; and is considered as threatened or endangered by State wildlife agencies in only 5 of the 17 States in which it occurs.

The petitioners stated that habitat loss and fragmentation, nest and hatchling predation, and collection for commercial markets, as well as other factors, have resulted in the wood turtle being ''biologically threatened in its native habitat in the United States'' (Restore *et. al.* 1994). However, information submitted by the petitioners and information otherwise available to the Service indicate that the status of the wood turtle is not sufficiently known for a significant portion of its range to determine the species' current, versus historic, distribution. Similarly, inadequate data was provided to determine whether the threats identified for specific study populations cited in the petition are likely to be causing rangewide declines in wood turtle populations.

Wood turtles continue to be widespread in a number of States, with viable populations reported from rural areas. In other States, numerous wood turtle occurrence records are reported but population and distribution data are insufficient to substantiate the need for State listing as threatened or endangered. Thus, the wood turtle is not State-listed as threatened or endangered throughout the majority of its range in the United States (Northeast Nongame Technical Committee 1994).

The petitioners presented information on the international trade in turtles of the genus *Clemmys*, as well as the domestic trade in wood turtles. This species was added to Appendix II of the Convention on International Trade in Endangered Species of Wild Flora and Fauna (CITES) on June 11, 1992. While addition to Appendix II does not prohibit all international trade in wood turtles, it does provide a means for strict regulation of trade in order to avoid use incompatible with the species' survival in the wild. The Service shares the concern of the petitioners that natural populations cannot sustain indefinitely the removal of adult, breeding-age turtles for the domestic commercial pet market. However, the Service finds that the petition fails to present substantial information indicating that the current commercial trade in wood turtles is so extensive that it threatens the species' existence across its range. The Service notes that with one exception, New Hampshire, all States within the range occupied by the wood turtle now have laws either prohibiting or severely restricting the collection of wood turtles from the wild for commercial trade. The State of New Hampshire is currently drafting rules that will limit the collection of wood turtles to educational and scientific purposes (James DiStefano, New Hampshire Department of Fish and Game, *in litt.*, 1995).

The petition provides information that some wood turtle populations are subject to high levels of predation on eggs, hatchlings and adult turtles. Raccoon, skunk, opossum, and fox are

believed to be the primary predators of wood turtles and their nests. Predator populations are lower than they have been in recent years within the range of the wood turtle in the East (Krebs et al 1994). While predator populations may rebound at some point, wood turtles are currently under less predation pressure in several of the northeastern States.

Irrespective of the finding on this petition, the Service concurs with the petitioners that many aspects of the life history and breeding ecology of this species, as well as its popularity with collectors, could make it vulnerable to over-exploitation and population declines.

References Cited

Krebs, J.W., T.W. Strine, J.S. Smith, C.E. Rupprecht, and J.E. Childs. 1994. Rabies surveillance in the United States during 1993. Journal of the American Veterinary Medical Association. vol. 205(12):1695–1709.

Northeast Nongame Technical Committee. 1994. Legal categories of rare species in the northeastern states. Unpubl. rep., 25 pp.

Restore: the North Woods, S. Garber, J. Burger, C. Ernst, J. Harding, S. Tuttle, J. Davis, and the Biodiversity Legal Foundation. 1994. Petition for a rule to list the North American wood turtle (*Clemmys insculpta*) as threatened under the Endangered Species Act 16 U.S.C. Sec. 1531 *et seq*. (1993) as amended. Unpubl. doc., Concord, MA. 42 pp. and appendices.

Author. The primary author of this document is Michael Amaral of the Service's New England Field Office (see **ADDRESSES**).

Authority

The authority for this action is the Endangered Species Act (16 U.S.C. 1531 *et seq*.).

Dated: May 16, 1995.

Mollie H. Beattie,

Director, U.S. Fish and Wildlife Service.

[FR Doc. 95–12919 Filed 5–25–95; 8:45 am]

BILLING CODE 4310–55–P

Notices

Federal Register
Vol. 60, No. 102
Friday, May 26, 1995

This section of the FEDERAL REGISTER contains documents other than rules or proposed rules that are applicable to the public. Notices of hearings and investigations, committee meetings, agency decisions and rulings, delegations of authority, filing of petitions and applications and agency statements of organization and functions are examples of documents appearing in this section.

DEPARTMENT OF AGRICULTURE

Grain Inspection, Packers and Stockyards Administration

Reel Livestock Center, Inc., Congerville, Illinois; Correction

On May 10, 1995, a letter was sent requesting a notice be published in the **Federal Register** (47 FR 32177) giving notice of the proposed posting for certain stockyards listing their facility number, name, and location.

This notice is to correct the posting number and the location assigned to Reel Livestock Center, Inc.

The notice should have read.

IL–174 Reel Livestock Center, Inc., Congerville, Illinois.

Done at Washington, D.C., this 23rd day of May, 1995.

Daniel L. Van Ackeren,

Acting Director, Livestock Marketing Division.

[FR Doc. 95–13003 Filed 5–25–95; 8:45 am]

BILLING CODE 3410–20–P

DEPARTMENT OF COMMERCE

Bureau of Export Administration

President's Export Council Subcommittee on Export Administration; Notice of Partially Closed Meeting

A partially closed meeting of the President's Export Council Subcommittee on Export Administration (PECSEA) will be held June 20, 1995, 1:30 p.m., at the U.S. Department of Commerce, Herbert C. Hoover Building, Room 4832, 14th & Pennsylvania Avenue, N.W., Washington, DC. The Subcommittee provides advice on matters pertinent to those portions of the Export Administration Act, as amended, that deal with United States policies of encouraging trade with all countries with which the United States has diplomatic or trading relations and of controlling trade for national security and foreign policy reasons.

Public Session

1. Opening remarks by the Chairman.
2. Presentation of papers or comments by the public.
3. Update on Bureau of Export Administration activities.
4. Discussion on working group programs.

Executive Session

5. Discussion of matters properly classified under Executive Order 12356, dealing with the U.S. export control program and strategic criteria related thereto.

A Notice of Determination to close meetings, or portions of meetings, of the Subcommittee to the public on the basis of 5 U.S.C. 522(c)(1) was approved Sept. 30, 1993, in accordance with the Federal Advisory Committee Act. A copy of the Notice of Determination is available for public inspection and copying in the Central Reference and Records Inspection Facility, Room 6020, U.S. Department of Commerce, Washington, D.C. For further information, contact Ms. Lee Ann Carpenter on (202) 482–2583.

Dated: May 23, 1995.

John Richards,

Acting Assistant Secretary for Export Administration.

[FR Doc. 95–13021 Filed 5–25–95; 8:45 am]

BILLING CODE 3510–DT–M

Foreign-Trade Zones Board

[Docket 25–95]

Foreign-Trade Zone 146, Lawrence County, Illinois; Application for Subzone Status, Marathon Oil Company (Oil Refinery), Robinson, Illinois

An application has been submitted to the Foreign-Trade Zones Board (the Board) by the Bi-State Authority, grantee of FTZ 146, requesting special-purpose subzone status for the oil refinery of Marathon Oil Company (Marathon) (subsidiary of USX Corporation), located in Robinson, Illinois. The application was submitted pursuant to the provisions of the Foreign-Trade Zones Act, as amended (19 U.S.C. 81a–81u), and the regulations of the Board (15 CFR part 400). It was formally filed on May 19, 1995.

The refinery (890 acres) is located at Marathon Ave. and State Hwy 33 in Robinson, Crawford County, in southeastern Illinois, some 150 miles east of St. Louis. The refinery (180,000 barrels per day; 570 employees) is used to produce fuels and petrochemical feedstocks. Fuels produced include gasoline, jet fuel, kerosene, fuel oil and residual oil. Petrochemical feedstocks produced include butane and propane, and refinery by-products include petroleum coke and sulfur. Some 30 percent of the crude oil (some 80 percent of inputs) and some feedstocks used by the refinery are sourced from abroad.

Zone procedures would exempt the refinery from Customs duty payments on the foreign products used in its exports. On domestic sales, the company would be able to choose the finished product duty rate (nonprivileged foreign status—NPF) on certain petrochemical feedstocks and refinery by-products (duty-free). The duty on crude oil ranges from 5.25¢ to 10.5¢ barrel. Marathon indicates that some of the NPF finished products might be used as fuel in the refining process. The application indicates that the savings from zone procedures would help improve the refinery's international competitiveness.

In accordance with the Board's regulations, a member of the FTZ Staff has been designated examiner to investigate the application and report to the Board.

Public comment is invited from interested parties. Submissions (original and 3 copies) shall be addressed to the Board's Executive Secretary at the address below. The closing period for their receipt is July 25, 1995. Rebuttal comments in response to material submitted during the foregoing period may be submitted during the subsequent 15-day period to August 9, 1995.

A copy of the application and accompanying exhibits will be available for public inspection at each of the following locations:

Lawrence County Industrial Development Council, County Courthouse, Lawrenceville, Illinois 62439.

Office of the Executive Secretary, Foreign-Trade Zones Board, Room 3716, U.S. Department of Commerce, 14th & Pennsylvania Avenue, NW., Washington, DC 20230.

Dated: May 22, 1995.

Dennis Puccinelli,

Acting Executive Secretary.

[FR Doc. 95–13012 Filed 5–25–95; 8:45 am]

BILLING CODE 3510–DS–P

International Trade Administration

[A–821–807]

Notice of Final Determination of Sales at Less Than Fair Value: Ferrovanadium and Nitrided Vanadium From the Russian Federation

AGENCY: Import Administration, International Trade Administration, Department of Commerce.

EFFECTIVE DATE: May 26,1995.

FOR FURTHER INFORMATION CONTACT: David J. Goldberger or Louis Apple, Office of Antidumping Investigations, Import Administration, International Trade Administration, U.S. Department of Commerce, 14th Street and Constitution Avenue, N.W., Washington, D.C., 20230; telephone: (202) 482–4136 or (202) 482–1769, respectively.

Applicable Statute and Regulations

Unless otherwise indicated, all citations to the statute and to the Department of Commerce (the Department) regulations are in reference to the provisions as they existed on December 31, 1994.

Final Determination: We determine that imports of ferrovanadium and nitrided vanadium from the Russian Federation (Russia) are being, or are likely to be, sold in the United States at less-than-fair-value (LTFV), as provided in section 735 of the Tariff Act of 1930, as amended (the Act). The estimated margins are shown in the ''Continuation of Suspension of Liquidation'' section of this notice.

Case History

Since the Department announced its preliminary determination on December 27, 1994, (60 FR 438, January 4, 1995) the following events have occurred:

In response to our request, on February 27, 1995, we received additional surrogate valuation data from Odermet Limited (Odermet), Galt Alloys, Inc. (Galt), SC Vanadium-Tulachermet (Tulachermet), and Chusavoy Metallurgical Works (Chusavoy).

On February 17, 1995, we amended our preliminary determination to correct a significant ministerial error (60 FR 10563, February 27, 1995).

From January through March , 1995, we conducted verifications at Galt, Tulachermet, Chusavoy, Odermet, Shieldalloy Metallurgical Corporation (Shieldalloy), and Gesellschaft fur Elektrometallurgie m.b.H. (GfE).[1] Verification reports were issued in February, March, and April, 1995.

On April 17, 1995, the petitioner, Shieldalloy, and respondents Odermet, Chusavoy, Galt, and Tulachermet filed case briefs. Rebuttal briefs were submitted by these parties on April 24, 1995. A public hearing was held on April 26, 1995.

Scope of Investigation

The products covered by this investigation are ferrovanadium and nitrided vanadium, regardless of grade, chemistry, form or size, unless expressly excluded from the scope of this investigation. Ferrovanadium includes alloys containing ferrovanadium as the predominant element by weight (*i.e.*, more weight than any other element, except iron in some instances) and at least 4 percent by weight of iron. Nitrided vanadium includes compounds containing vanadium as the predominant element, by weight, and at least 5 percent, by weight, of nitrogen. Excluded from the scope of this investigation are the vanadium additives other than ferrovanadium and nitrided vanadium, such as vanadium-aluminum master alloys, vanadium chemicals, vanadium waste and scrap, vanadium-bearing raw materials, such as slag, boiler residues, fly ash, and vanadium oxides.

The products subject to this investigation are currently classifiable under subheadings 2850.00.20, 7202.92.00, 7202.99.5040, 8112.40.3000, and 8112.40.6000 of the Harmonized Tariff Schedule of the United States (HTSUS). Although the HTSUS subheadings are provided for convenience and customs purposes, our written description of the scope is dispositive.

Period of Investigation

The period of investigation (POI) is December 1, 1993, through May 31, 1994.

Non-Market Economy Country Status

Russia has been treated as a non-market economy (NME) for the purpose of determining foreign market value (FMV) in all past antidumping investigations (see, e.g., Final Determinations of Sales at Less Than Fair Value: Pure Magnesium and Alloy Magnesium from Russia, 60 FR 16432 (March 30, 1995)) (Magnesium from Russia). No information has been provided in this proceeding that would lead us to consider changing this designation. Therefore, in accordance with section 771(18)(c) of the Act, we continue to treat Russia as a NME for purposes of this investigation.

Best Information Available (BIA)

In this investigation, three companies failed to respond to the Department's questionnaire, and we were unable to verify the sales response of a fourth company, Tulachermet (discussed below under Comment 1). Consistent with the Department's two-tiered methodology for assigning BIA, we have based the BIA margin on the highest margin in the petition (see, Final Determination of Sales at Less Than Fair Value: Antifriction Bearings (other than Tapered Roller Bearings) and Parts Thereof from the Federal Republic of Germany, 54 FR 1892, 19033 (1989)) and (*Allied Signal* v. *United States*, 996 F.2d 1185 (Fed. Cir. 1993) (June 22, 1993)).

Fair Value Comparisons

In cases involving imports from NMEs, we calculate a single antidumping duty margin for companies that do not demonstrate that they are entitled to separate rates. The Russia-wide margin in this case, which applies to all exporters other than Galt, GfE, and Odermet, is the BIA rate. Galt, GfE, and Odermet have received separate rates.

To determine whether sales to the United States of ferrovanadium and nitrided vanadium by Galt, GfE, and Odermet, were made at less than fair value, we compared the United States price (USP) to FMV, as specified in the ''United States Price'' and ''Foreign Market Value'' sections of this notice.

United States Price (USP)

Pursuant to section 772 of the Act, USP was calculated on the basis of purchase price for Odermet, and exporter's sales price (ESP) for Galt and GfE, as described in the preliminary determination notice. Pursuant to findings at verification, we made the following adjustments to our margin calculations:

- For GfE, we deducted handling and repacking expenses incurred in Germany on certain sales. We revised the inland freight to customer expense incurred on certain sales to reflect verification findings. Finally, we revised the general and administrative expenses allocated to further manufacturing expenses to include environmental cleanup expenses omitted by GfE's U.S.

[1] Shieldalloy is the petitioner in this investigation and is related to GfE as both are wholly-owned subsidiaries of Metallurg, Inc.

affiliate, Shieldalloy, as derived from verification information.

- For Odermet, we revised ocean freight, brokerage, and containerization per-unit expenses on a contained vanadium weight basis, rather than gross weight basis (*see* Comment 12). We also revised inland insurance and marine insurance expenses, which Odermet had allocated on the basis of weight, to a value basis, reflecting the manner in which these expenses were incurred. Finally, we recalculated foreign inland freight using surrogate values, based on our verification finding that the actual freight services were provided by NME subcontractors (*see* Comment 10).

Foreign Market Value

In accordance with section 773(c) of the Act, we based FMV for ferrovanadium and nitrided vanadium on the factors of production reported by the two factories in Russia,(*i.e.*, Chusovoy and Tulachermet), which produced the subject merchandise for export to the United States. We calculated FMV based on factors of production as cited in the preliminary determination, making the following adjustments:

- We applied this methodology to Odermet's sales as well as to Galt's and GfE's sales as we have rejected Odermet's intermediate reseller claim (*see* Comment 5).
- We recalculated inland freight distances between each factory and various input suppliers, based on verified distances.
- We made minor revisions to many of Chusovoy's material and energy consumption factors, based on corrected verified data.
- We applied Chusovoy's public version reported vanadium pentoxide and ferrovanadium production labor factors for the corresponding labor inputs for Tulachermet, as discussed below in Comment 9. In addition, Odermet sold the subject merchandise produced by Tulachermet. Even though significant portions of Tulachermet's responses failed verification, Tulachermet's factors of production, with exception of labor, fully verified. Therefore, we continued to use Tulachermet's factors to calculate FMV for sales by Odermet.

To calculate FMV, the verified factor amounts for each company were multiplied by the appropriate surrogate values for the different inputs. In accordance with section 773(c)(4) of the Act, the Department must, to the extent possible, determine FMV by valuing the factors of production in one or more market economy countries that: (1) Are at a level of economic development comparable to that of the NME economy country, and (2) are significant producers of comparable merchandise. As discussed in the preliminary determination, the Department has determined that South Africa is the country that best meets the statutory criteria for purposes of this investigation. Accordingly, we have based FMV on the appropriate factors of production as valued in South Africa, except for those factors for which we were unable to obtain a suitable value from South Africa. In these instances, as discussed below, and in our preliminary determination, we used values from publicly-available, published information pertaining to Poland, Thailand, and Turkey, or values pertaining to Brazil and Germany as included in the petition. The selection of surrogate countries and certain surrogate values is discussed further below at Comment 6. We have obtained and relied upon published, publicly-available information, wherever possible, to value the factors of production. Following the surrogate value selection methodology outlined in our preliminary determination, we have used the same surrogate values used in the preliminary, with the following exceptions:

- For vanadium slag, we adjusted the surrogate value to account for differences between the grade of the surrogate and Russian materials, as discussed below in Comment 7.
- For additional raw materials identified subsequent to our preliminary determination, we used published price quotes for the South African material (fluorspar), or, in the absence of any available value from South Africa, unit values derived from Thai import statistics (fly ash, aluminum alloy, and cold-rolled steel sheet) or Thai export statistics (paint, thinner).
- For natural gas, we used the Polish natural gas rate published by the International Energy Agency.

As noted above, we relied on surrogate values from Thailand and Poland, countries identified as potential surrogates for Russia in the July 29, 1994, Memorandum from the Office of Policy to Gary Taverman, when no appropriate South African value was available for a particular factor. When no value was available from any potential surrogate country, we used values from Brazil and Germany, as described in our preliminary determination. The selection of the surrogate values for this determination is discussed further in the Valuation Memorandum dated May 19, 1995.

Currency Conversion

We made currency conversions based on the official exchange rates in effect on the dates of the U.S. sales as certified by the Federal Reserve Bank or, when unavailable, at the rates published by the International Monetary Fund in International Financial Statistics.

Verification

As provided in section 776(b) of the Act, we verified or attempted to verify all information submitted by respondents for use in our final determination. We used standard verification procedures, including examination of relevant accounting records and original source documents provided by respondents.

Interested Party Comments

Comment 1: Rejection of Tulachermet Sales Response

GfE and Shieldalloy argue that the Department should reject Tulachermet's sales response and apply BIA for the final determination because Tulachermet failed verification. The major reasons for the alleged verification failure cited by GfE and Shieldalloy are: (a) The Department's discovery at verification of an unreported sale accounting for a significant portion of the merchandise sold during the POI; (b) Tulachermet's refusal to allow the Department timely access to essential information at verification; (c) Tulachermet's inability to support or substantiate the questionnaire responses; and (d) inaccurate and omitted data. According to GfE and Shieldalloy, these verification failures establish the inaccuracy and unreliability of Tulachermet's response. Thus, BIA should be used for Tulachermet's margin.

Tulachermet claims that the sale in question was omitted inadvertently from the response and was not an attempt to impede the investigation. On the contrary, Tulachermet claims that reporting the sale would have been in its interest as the selling price was substantially higher than the prices of the reported sales. Tulachermet states that the initial refusal to allow the Department to view certain information at verification, which was subsequently permitted, was due to the staff involved with verification not having been given explicit authorization from the chief company official. Tulachermet states that, until recently, all factory output information was considered a state secret, with severe penalties for disclosure to outsiders. Nevertheless, Tulachermet asserts that the Department

subsequently was able to review the information in question and confirm that there were no other discrepancies in Tulachermet's sales response. Accordingly, Tulachermet contends that BIA is unjustified under these circumstances.

Odermet adds that there is no basis to reject Tulachermet's factors of production response since there were no problems with that portion of the response except for labor factors and distances to input suppliers.

DOC Position

During verification, Tulachermet withheld access to a customer contract and correspondence file. Under 19 CFR 353.36(c)(1994), all parties are on notice that ''[a]s part of the verification, employees of the Department will request access to all files, records, and personnel of the producers, resellers, importers, or unrelated purchasers which the [Department] considers relevant to factual information submitted.'' The verification outline presented to Tulachermet prior to verification specifically advised Tulachermet that complete sales records, contracts, and customer correspondence files would be reviewed at verification and should be made available for inspection at verification. While the verifiers were eventually granted access to the file in question, the delay in providing access compromised this critical component of verification. More importantly, the Department had no way to determine whether the file, when finally seen, was complete. As a result, the Department was unable to conclude that no further discrepancies exist. Section 776(b) of the Act provides that if the Department ''is unable to verify the accuracy of the information submitted, it shall use the best information available to it as the basis for its action * * *.'' Section 776(c) of the Act further states that the Department shall use BIA ''whenever a party or any other person refuses or is unable to produce information requested in a timely manner and in the form required, or otherwise significantly impedes an investigation.''

While we recognize the attempt of Tulachermet to be responsive, the Department cannot consider a response to be verified when the respondent significantly impedes the investigation in the manner described above. The verifiers' discovery of a substantial quantity of unreported POI sales further undermined the integrity of Tulachermet's sales response. Under such circumstances, we were unable to verify Tulachermet's responses. Accordingly, we must reject its sales response and rely on BIA. Further, because Tulachermet's actions at verification significantly impeded the Department's investigation, as to Tulachermet, we have treated the company as an uncooperative respondent warranting the application of adverse BIA.

Comment 2: Sales Responses from Other Russian Companies

GfE and Shieldalloy claim that Chusovoy and a Russian trading company should have submitted sales responses because, pursuant to information GfE provided for the record, they knew at the time of invoice preparation, if not at the time of sale, that the ultimate destination of the merchandise sold was the United States. GfE and Shieldalloy cite an internal GfE memorandum as evidence that, at the time of sale, Chusovoy knew the ultimate destination of its nitrided vanadium shipment. Since Chusovoy and the trading company each failed to provide a sales questionnaire response for these sales transactions, GfE and Shieldalloy argue that these entities should be assigned a margin based on BIA.

Chusovoy states that knowledge of the ultimate destination at the time of sale is the determinant factor and that, at the time of the sale, Chusovoy did not know this information. Chusovoy asserts that none of the sales documentation between GfE and Chusovoy, including the nitrided vanadium agreement, give any indication as to the ultimate destination of the merchandise. According to Chusovoy, GfE's internal memorandum is a self-serving document, not signed by Chusovoy, which, moreover, indicates the merchandise could be sold to another market as well as the United States.

DOC Position

We agree with Chusovoy. Our verification confirmed that neither Chusovoy nor the Russian trading company had knowledge *at the time of sale* as to the ultimate destination of its merchandise. It is knowledge at the time of the sale, and not the date of shipment, that is relevant in determining the proper respondent for such sales (*see, Magnesium from Russia*). In this situation, GfE was the first party in the distribution channel to know the ultimate destination of the merchandise and is, therefore, the proper exporter respondent for these sales.

Comment 3: Rejection of GfE/Shieldalloy response

Chusovoy, Galt, and Tulachermet argue that the Department should reject GfE/Shieldalloy's sales response because sales reporting of Russian-sourced merchandise was based on quantity estimates drawn from inventory turnover records, rather than actual sales data. These respondents claim that this averaging approach methodology is counter to the Department's specific questionnaire instructions and creates the potential for minimizing margins from large quantity product sales at lower prices. Accordingly, these respondents contend that the Department should assign GfE/Shieldalloy a margin based on BIA.

GfE and Shieldalloy contend that their reporting methodology is reasonable and sound, given the manner in which the sales were conducted. These sales were not reported using averaged prices, according to GfE and Shieldalloy, but rather at the per-unit price of each sale. GfE and Shieldalloy add that the verification showed the methodology was consistent with the information presented throughout the proceeding.

DOC Position

We have used GfE's and Shieldalloy's questionnaire response in our final determination. Their methodology did not affect the prices reported but rather the quantity of subject merchandise reported. We verified that the sales reporting was complete and that the inventory turnover methodology provided a reasonable basis for determining the quantity of subject merchandise sold during the POI. Further, we found no indication of any sale-specific distortions deriving from the application of this methodology.

Comment 4: Proper Respondent for Galt Sales

GfE and Shieldalloy claim that the exporter for Galt's sales was Hascor BV, or the ''Galt/Hascor'' joint venture, not Galt, since according to GfE and Shieldalloy, the former was the first exporter with knowledge that the merchandise was destined for the United States. Since neither entity filed a questionnaire response, GfE and Shieldalloy contend that a BIA rate should be assigned to these entities, and that Galt should receive the ''all others'' rate. Alternatively, GfE and Shieldalloy claim that the Galt response should be rejected because of the number of revisions submitted seven days prior to verification and response errors identified at verification.

Galt responds that the record, including the verification results, demonstrates that Galt is the exporter in this investigation and is entitled to its own rate. Galt points to a variety of shipment documents, as examined at verification, which specifically identify it as the exporter of the merchandise. Further, Galt adds that, at verification, the Department was able to determine that Galt was the first party in the distribution chain to have knowledge of the destination of the merchandise and, in fact, was the party that determined that the merchandise was to be sent to the United States.

DOC Position

We agree with Galt. Our verification confirmed that Galt is the proper exporter-respondent for its sales because it determines that the merchandise is destined for sale in the United States. The Galt/Hascor joint venture was responsible for garnering the merchandise from Russia and shipping it to a bonded warehouse in the Netherlands. At that point Galt obtained the merchandise, sold it and shipped it to the United States. Revisions to its response were timely and verification discrepancies were relatively minor, affecting only its movement expenses.

Comment 5: Odermet's Intermediate Country Reseller Claim

Odermet claims that, in accordance with Section 773(f) of the Act, its U.S. sales should be compared to its sales to Germany for the following reasons: (1) Odermet was a reseller of the subject merchandise; (2) the Russian manufacturer, Tulachermet, did not know at the time of the sale to Odermet the country to which Odermet intended to export the merchandise; (3) the merchandise was exported by Odermet to a country other than the United States; (4) the merchandise entered the commerce of an intermediate country (Germany) but was not substantially transformed there; and (5) the merchandise was subsequently exported to the United States. Odermet states that verification corroborated its claim, demonstrating that it met all of the above statutory criteria to support its claim. In particular, Odermet states that it demonstrated that the merchandise entered the commerce of Germany and was not warehoused in bond, and that the merchandise could then be resold to customers in Germany and elsewhere, including the United States.

GfE and Shieldalloy contend that Odermet's intermediate reseller claim should be rejected because Odermet failed to establish at verification that the merchandise entered the commerce of Germany. GfE and Shieldalloy's contention rests on its assertion that Odermet failed to demonstrate that the warehouses used to store the merchandise were non-bonded and that, in nearly every case, merchandise ultimately shipped to the United States was stored in one warehouse in one city, while merchandise ultimately sold to German customers was stored in a different warehouse in a different city. Even if the warehouses were not bonded, GfE and Shieldalloy claim that, as established in Final Determination of Sales At Less Than Fair Value: Sulfur Dyes, Including Sulfur Vat Dyes, from the People's Republic of China, (58 FR 7537, February 8, 1993) (Sulfur Dyes), storage in a non-bonded warehouse in a third country alone does not demonstrate, in and of itself, that the merchandise enters the commerce of that country. The channel of distribution in this case, they continue, does not support a finding that the merchandise entered the commerce of Germany.

DOC Position

For the Department to accept Odermet's claim, Odermet must demonstrate that it satisfies each of the five statutory criteria under Section 773(f) of the Act, cited above. The Department agrees with Odermet that it has met four of these five criteria. However, we do not agree that Odermet has satisfied the criterion that the merchandise enter the commerce of the intermediate country. Verification revealed that Odermet maintains two distinct distribution channels: (a) Transportation of merchandise from Tulachermet to a warehouse in Duisburg, Germany, for prospective sale to German customers in that region; and (b) transportation of merchandise from Tulachermet to a warehouse in Bremerhaven, Germany, for prospective sale and ocean shipment from the port of Bremerhaven to customers in the United States and other countries outside of Germany. In each case, the sales agreement with the customer was made prior to shipment of the merchandise into Germany. Moreover, the shipment quantity and delivery dates correspond with the specifications in the sales agreements. While for each distribution channel we noted one exception to the pattern, in that one shipment to Duisburg was destined for delivery to overseas customers, and one shipment to Bremerhaven was destined to a German customer, all other shipments followed the above stated pattern. Furthermore, although the Bremerhaven warehouse may not have been a bonded warehouse (we have no evidence that it was or was not), we found no customs duties or German value-added taxes (VAT) were assessed on U.S. sales through the Bremerhaven warehouse—expenses that would support a finding that such merchandise entered Germany for commercial consumption—while duties and VAT were imposed on sales withdrawn from a bonded warehouse in Duisburg.

The sum of these facts indicates two very different and distinct patterns of distribution, with merchandise shipped to Bremerhaven normally not entering the commerce of Germany, as this merchandise is not intended to be made available to German customers. Under similar circumstances in Sulfur Dyes, where sales intended for U.S. export followed a different sales and distribution pattern from sales intended for domestic consumption in Hong Kong, we found the pattern for U.S. sales to be ''most accurately characterized as transshipment.'' In this investigation, we reach the same conclusion for Odermet's sales. These transshipments do not enter the commerce of Germany and, accordingly, do not merit consideration under Section 773(f) of the Act.

Comment 6: Surrogate Country Selection

Odermet contends that South Africa is not appropriate for use as the surrogate country for Russia in this investigation because current economic data offered by Odermet indicates that South Africa is not economically comparable to Russia in terms of gross domestic product (GDP). Odermet argues that the Department should first attempt to value the factors of production from the ''first tier'' of comparable economies identified in the Department's surrogate country selection memorandum dated July 29, 1994,—Algeria, Poland, Thailand, Tunisia, and Turkey. Specifically, Odermet proposes the use of a surrogate value for natural gas from Poland. For values that could not be obtained from the above-mentioned countries, such as vanadium slag, Odermet suggests that then the Department would turn to allegedly noncomparable economies such as South Africa, following the methodology applied in Final Determination of Sales at Less Than Fair Value: Cased Pencils from the PRC (59 FR 55625, November 8, 1994) (Pencils).

Chusovoy, Galt, and Tulachermet agree with Odermet that South Africa is not economically comparable to Russia, but acknowledge that vanadium slag has to be valued in South Africa because of the lack of alternatives. However, they contend that values from the first tier

countries should be used for the other factors. Specifically, they propose the use of a Polish labor rate and an Algerian value for natural gas.

GfE and Shieldalloy support the selection of South Africa as the appropriate surrogate country. This selection, they state, is consistent with the statutory requirement of Section 773(c)(4) of the Act that the surrogate country be economically comparable and a significant producer of comparable merchandise. They note that the Department, in its December 22, 1994, Office of Policy Memorandum, has recognized that South Africa is the only producer of comparable merchandise whose level of economic development is reasonably close to that of Russia. GfE and Shieldalloy further assert that none of the first tier countries should be considered as acceptable surrogates for Russia in valuing factors for this investigation because these countries produce neither the subject merchandise nor comparable merchandise. For those instances where values from these countries were used in the preliminary determination or may be considered for the final determination, GfE and Shieldalloy contend that the Brazilian data from the petition should be used. Brazil has been accepted as an appropriate surrogate country for purposes of the initiation of this investigation, and has also been used as the surrogate country in the Magnesium from Russia investigation. The methodology employed in Pencils, they say, is not appropriate here because in Pencils the other countries used as surrogates were producers of comparable merchandise, while in this case the other countries do not produce comparable merchandise.

DOC Position

Section 773 (c)(4) of the Act requires that, to the extent possible, the factors be valued in one or more market economy countries that are: (a) At a comparable level of economic development, and (b) significant producers of comparable merchandise. In this investigation, none of the countries initially identified as potential surrogate countries because of comparable levels of economic development produces comparable merchandise. Of those countries that produce comparable merchandise, only South Africa, which produces the subject merchandise, is the most comparable in terms of economic development, as stated in the December 22, 1994, Memorandum. We acknowledge that economic growth trends in South Africa and Russia are dissimilar, but these differences notwithstanding, the Department's selection of South Africa satifies both statutory criteria set forth above.

As for the specific factors cited by the parties, the respondents' claims that Russian wage levels are among the lowest in the world, are not relevant because information regarding specific NME prices or wage rates cannot be relied upon. Thus, the argument based on a comparison of purported Russian wage rates with South African wage rates is inappropriate.

We disagree with GfE and Shieldalloy's proposal to use Brazilian values from the petition where there are no South African values available because Brazil is not a producer of comparable merchandise—there is no information on the record that Brazil has been a significant producer of ferrovanadium or comparable merchandise since 1986.

Comment 7: Valuation of Vanadium Slag

Respondents contend that the Department should adjust the vanadium slag value, based on a price quote submitted in the petition for South African Highveld slag containing 24% vanadium pentoxide, to reflect the lower purity of the Russian slag in addition to the lower vanadium pentoxide content of 12 to 20%. Simply adjusting the value for vanadium pentoxide content (''straight-line proportionality'' method) is not sufficient, respondents claim, because the additional impurities contained in the Russian slag add to the cost of extracting vanadium pentoxide from the raw material. They argue that this renders the Russian slag less valuable than the prime grade South African Highveld slag, even after adjusting for the different concentration levels of vanadium pentoxide. Chusovoy, Galt, and Tulachermet propose an adjustment to the Highveld slag value based on the price differential for processed vanadium pentoxide of Highveld 98% merchandise to 90% merchandise, according to price information published in the Metal Bulletin. These respondents claim that basing the price differential on this data is appropriate given the strong market linkage between vanadium pentoxide, the intermediate product, and ferrovanadium, the final product. Moreover, they contend it is appropriate to base the adjustment on the difference between Highveld vanadium pentoxide and other vanadium pentoxide prices because the surrogate value for slag is based on the Highveld slag value.

Odermet adds that the Metal Bulletin price-based adjustment methodology is the only reasonably sound basis for valuing vanadium slag, given that there is no source of publicly available published information for vanadium slag prices and that, as vanadium slag is the major input for processed vanadium pentoxide, the pricing of vanadium pentoxide is relevant to valuing vanadium slag. Finally, Odermet states that this case differs from the Final Determination of Sales at Less Than Fair Value: Refined Antimony Trioxide from the PRC (57 FR 6801, February 28, 1992) (Antimony) situation, where the Department used the straight-line proportionality method because it had no prices for different concentrate levels. Here, Odermet contends, the Department does have the information to make the appropriate adjustment.

GfE and Shieldalloy state that the adjustments, proposed by respondents, are not supported economically. GfE and Shieldalloy argue that respondents have failed to demonstrate the relationship between selected European transaction prices for processed vanadium pentoxide and any value differential between the South African and Russian raw materials. They cite a similar situation in Antimony where the Department made no adjustment to the raw material value because, without actual prices, the data was inconclusive as to the adjustment to be made. In addition, GfE and Shieldalloy contend that the respondents' price adjustment methodology is flawed because it utilizes price comparisons between an ultra-refined product manufactured from Highveld slag that is not likely to be used in ferrovanadium production, to the lowest prices published. After discounting those comparisons, GfE and Shieldalloy assert that the price differentials between processed grades are significantly less than those claimed by respondents.

DOC Position

Based on the submitted information, verification findings, and the Department's own research, we agree with the respondents that the South African vanadium slag value should be adjusted to reflect the lower purity of Russian vanadium slag. Our analysis and research suggest a strong relationship between vanadium pentoxide prices and vanadium slag value, particularly as vanadium slag is the principal raw material for vanadium pentoxide production and there are few, if any, other markets for vanadium slag. We have confirmed, through a South African publication, South Africa's Mineral Industry 1993/94, that the Highveld prices cited by Chusovoy, Galt, Odermet, and Tulachermet reflect

the typical Highveld product, while the prices for the other 98% products reflect Chinese origin, and the 90% products are of Russian slag. Based on this information, we have adjusted the vanadium slag surrogate value according to the Metal Bulletin vanadium pentoxide price differentials. Our methodology for adjusting both Tulachermet's and Chusovoy's slag values is detailed in the Valuation Memorandum.

Comment 8: Adjustment to Factory Overhead Percentage

Chusovoy, Galt, and Tulachermet claim that the surrogate value for factory overhead, which was derived from GfE's experience at its German facility and submitted in the petition, should be adjusted for the known differences between the GfE production plant and the Russian plants. These respondents contend that the Department verified that the Russian plants are fully depreciated and lack special environmental equipment. The respondents claim further that depreciation, including depreciation for environmental control equipment, accounts for the majority of the GfE factory overhead percentage. Accordingly, the respondents argue that the Department should reduce the factory overhead percentages by at least half to reflect the absence of any depreciation element in the Russian producers' factory overhead.

GfE and Shieldalloy state that factory overhead was properly calculated using the petition information derived from GfE experience, and this value remains the best available information. They assert that GfE's depreciation experience is likely to be the same as the Russian companies. Moreover, as there is no evidence of any known differences between the GfE's experience and the Russian producers', the respondents' claim for a factory overhead adjustment is unsubstantiated and the suggested adjustment methodology is arbitrary.

DOC Position

The Department has been unable to locate other, publicly available, data for the factory overhead surrogate value. (The Department's attempts to find factory overhead data is described in the *Valuation Memorandum*.) Thus, the only available data is the percentages stated in the petition. The respondents' assertions provide an insufficient basis for us to make any adjustments to these percentages.

Comment 9: BIA Labor Factors

GfE, Shieldalloy, and Odermet assert that the Department should use the labor factors reported by Chusovoy as BIA for the unreported Tulachermet labor factors. GfE and Shieldalloy state that Chusovoy's factors should be used because they are the highest available labor factors and, given Tulachermet's refusal to provide this information, the most adverse data should be applied. Odermet favors the use of Chusovoy labor factors because it believes these factors reflect more accurately the Russian approach to production of the subject merchandise.

DOC Position

Tulachermet failed to submit its production labor factors. Accordingly, it is appropriate to make adverse assumptions about its labor factors in assigning BIA. Thus, consistent with Department practice, we have applied the data from the public version of Chusovoy's response, because these factors are higher than that reported in the petition.

Comment 10: Freight Valuation for Odermet Exports

Odermet argues that its freight expenses from the Russian factory to German warehouses were paid in a market-economy currency to a market-economy freight forwarder and, thus, should be accepted as reported, even though the freight forwarder contracted with NME trucking companies to perform the actual service. Odermet claims that the subcontracting arrangement is irrelevant; all that is required for establishing the market price for the freight service is the convertible currency transaction to the market economy freight forwarder. To do otherwise and value the freight service using a surrogate value would lead, according to Odermet, to such ''absurd'' situations as finding surrogate values for PRC-origin inputs when calculating the cost of production for a Japanese producer.

DOC Position

We disagree with Odermet. In NME proceedings, our consistent methodology has been to determine whether a good or service obtained through a market economy transaction is, in fact, sourced from a market economy rather than merely purchased in it. For example, in Final Determination of Sales at Less Than Fair Value: Coumarin from the People's Republic of China (59 FR 66895, December 28, 1994), we did not value Chinese port charges according to the U.S. dollar price quote obtained from a market economy freight forwarder because of our assumption that such services were actually provided by Chinese sources. Instead, we valued port charges according to the information obtained from the surrogate country. Since such goods and services are produced in a NME, we cannot rely on the market economy payment transaction as the basis for valuing these charges because the costs upon which these expenses are based are not themselves market-based. Although Odermet arranges the freight transportation through its market economy freight forwarder, the forwarder's costs for contracting to NME trucking companies cannot be relied on and, thus, the price charged to Odermet cannot be relied upon.

Comment 11: Input Freight for Tulachermet's Vanadium Slag Factor

GfE and Shieldalloy allege that the Department erred in not including surrogate freight charges for the expense of transporting vanadium slag from the source to Tulachermet. Although the surrogate value is based on an FOB South African port price, which includes inland freight expenses, GfE and Shieldalloy claim that an additional amount for the freight expense should be added to Tulachermet's FMV calculation because the distance between Tulachermet's supplier and Tulachermet is four to five times greater than the distance from the South African supplier to the South African port.

Odermet states there is no support for GfE and Shieldalloy's contention regarding the source of the raw material and distance to it from the port.

DOC Position

When relying on a surrogate value that is freight-inclusive, the Department's consistent practice has been to accept that value as the surrogate value for the good as delivered to the NME consumer, without any attempt to adjust for alleged differences in freight costs (see, *e.g.*, Final Determination of Sales at Less Than Fair Value: Saccharin from the People's Republic of China, 59 FR 588818 (November 15, 1994). In most cases, we do not have sufficient information regarding the freight expense included in the surrogate value in order to make the adjustment. Moreover, a value inclusive of freight represents the level of the surrogate value we intend to reflect—the surrogate price of the good available to the producer at its factory gate. We add an additional value for freight from the supplier to the producer only when such freight is not included in the surrogate value. Since the surrogate value for vanadium slag is freight-inclusive, we have made no

adjustment to the vanadium slag value for purported differences in freight expenses.

Comment 12: Odermet's Export Shipment Expenses

Odermet claims it correctly reported its per-unit freight expenses based on gross weight, rather than contained vanadium weight, because this methodology reflects the manner in which it is billed for freight services.

GfE and Shieldalloy contend that, as USP is reported in terms of contained vanadium weight, the freight expenses should be reported on the same basis and thus must be corrected.

DOC Position

We agree with GfE and Shieldalloy and have adjusted these expenses accordingly. Price adjustments are always made on the same basis upon which price is reported. Although Odermet is correct that expenses should be reported on the same basis on which they are incurred, since Odermet reported its sales prices on a contained vanadium weight basis, the proper basis for allocating movement expenses on a per-unit basis is contained vanadium weight. To allocate these expenses on a gross weight basis would understate the expense to Odermet, not overstate it as Odermet claims.

Comment 13: Inflation Adjustments and Exchange Rate Conversions for Surrogate Values

GfE and Shieldalloy contend that the Department erred by not properly inflating pre-POI surrogate values to the POI for raw materials where the value was based on 1993 data. These parties contend that the pre-POI surrogate values must be converted to U.S. dollar values using contemporaneous exchange rates in order to accurately reflect costs and market conditions during the time these costs were incurred. Thus, according to GfE and Shieldalloy, to value these factors properly, the Department should first convert the value to U.S. dollars using the average exchange rate for 1993, and then inflate the value to the POI using the ratio between the average price index for 1993 and the average price index for the POI.

Chusovoy, Galt, and Tulachermet contend that the exchange rate methodology used in preliminary determination was proper, and that GfE and Shieldalloy's methodology is internally inconsistent. If contemporaneous exchange rates must be used, they say, then contemporaneous prices must also be used. However, Chusovoy, Galt, and Tulachermet add that there is no reason to inflate these 1993 prices because the period during which the subject merchandise was produced includes months in 1993, and there is no basis to conclude that average prices for 1993 went up or down relative to average prices during the POI.

DOC Position

The Department's consistent practice has been to first inflate non-contemporaneous surrogate values to the POI, to reflect the economic trends in the surrogate country, and then convert the POI value to U.S. dollars according to the POI exchange rate (see, *e.g.*, *Pencils*). Converting to U.S. dollars first and then inflating the U.S. dollar-denominated prices risks pulling into the valuation equation variables that have no bearing on factor prices in the surrogate country. Moreover, our practice is not to inflate values when the time period of the value—in this case 1993—overlaps with any part of the POI—in this case December 1993. GfE and Shieldalloy offer no compelling arguments to change our practice; thus we have made no changes to our inflation rate and exchange rate adjustment methodologies.

Continuation of Suspension of Liquidation

In accordance with section 733(d)(1) of the Act, we directed the Customs Service to suspend liquidation of all entries of ferrovanadium and nitrided vanadium from the Russian Federation entered, or withdrawn from warehouse, for consumption on or after January 4, 1995, which is the date of publication of our notice of preliminary determination in the **Federal Register**. We shall instruct the Customs Service to require a cash deposit or posting of a bond equal to the estimated amount by which the FMV exceeds the USP as shown below, as of the effective date of this notice. The suspension of liquidation instructions will remain in effect until further notice.

The weighted-average margins are as follows:

Manufacturer/producer/exporter	Weighted-average margin
Galt Alloys, Inc.	3.75
Gesellschaft far Elektrometallurgie m.b.H. (and its related companies Shieldalloy Metallurgical Corporation, and Metallurg, Inc.)	11.72
Odermet	10.10
Russia-wide Rate	108.00

ITC Notification

In accordance with section 735(d) of the Act, we have notified the ITC of our determination. As our final determination is affirmative, the ITC will determine whether these imports are causing material injury, or threat of material injury, to the industry in the United States, within 45 days. If the ITC determines that material injury, or threat of material injury, does not exist, the proceeding will be terminated and all securities posted will be refunded or cancelled. If the ITC determines that such injury does exist, the Department will issue an antidumping duty order directing Customs officials to assess antidumping duties on all imports of the subject merchandise entered, or withdrawn from warehouse, for consumption on or after the effective date of the suspension of liquidation.

Dated: May 19, 1995.

Susan G. Esserman,

Assistant Secretary for Import Administration.

[FR Doc. 95–13011 Filed 5–25–95; 8:45 am]

BILLING CODE 3510–DP–P

Countervailing Duty Order; Opportunity to Request a Section 753 Injury Investigation

AGENCY: Inport Administration, International Trade Administration, Department of Commerce.

ACTION: Notice of Opportunity to Request a Section 753 Injury Investigation for Countervailing Duty Orders.

SUMMARY: The Department of Commerce (the Department) is notifying domestic interested parties of their right to request an injury investigation under section 753 of the Tariff Act of 1930, as amended (the Act), for countervailing duty orders listed in the Appendix that were issued under former section 303 of the Act.

EFFECTIVE DATE: May 26, 1995.

FOR FURTHER INFORMATION CONTACT:

Cameron Cardozo, Office of Countervailing Compliance, Import Administration, International Trade Administration, U.S. Department of Commerce, 14th Street and Constitution Avenue, NW., Washington, DC 20230, telephone: (202) 482–2786; or Vera Libeau, Office of Investigations, U.S. International Trade Commission, 500 E Street, SW., Washington, DC 20436, telephone: (202) 205–3176.

SUPPLEMENTARY INFORMATION:

Background

We have listed in the appendix to this notice countervailing duty orders issued under former section 303 of the Act. At the time these orders were issued, U.S. law did not require injury determinations as a prerequisite to their issuance. With the accession of the United States to the World Trade Organization (WTO) and the enactment of the Uruguay Round Agreements Act of 1994 (URAA), P.L. 103–465, U.S. law has changed. Under the URAA, the Government of the United States may not assess countervailing duties on imports from a WTO member country in the absence of an injury determination. Thus, as noted in the Statement of Administrative Action, new section 753 of the Act (as amended by the URAA) provides that for such orders ''. . . a domestic interested party may request that the [International Trade] Commission initiate an investigation to determine whether an industry in the United States is likely to be materially injured by reason of imports of the merchandise subject to the CVD order if the order is revoked.'' *See* Statement of Administrative Action, URAA, p.272.

Opportunity to Request a Section 753 Injury Investigation

On January 1, 1995, the countries listed in the Appendix joined the WTO.[1] Therefore, for each countervailing duty order listed din the Appendix, we are notifying all domestic interested parties, as described in sections 771(9)(C), (D), (E), (F), or (G) of the Act, of their right to request an injury investigation under section 753(a) from the U.S. International Trade Commission (the Commission). In accordance with sections 753(b) (3) and (4) of the Act, outstanding section 303 orders for which the Commission has not previously made an affirmative injury determination will be revoked by the Department unless a request for an injury investigation is submitted to the Commission within six months of the date on which the country covered by the order joins the WTO, and the Commission renders an affirmative injury determination pursuant to section 753(a)(1) of the Act. For those countries which joined the WTO on January 1, 1995, requests must be filed with the Commission no later than June 30, 1995.

Requests for injury investigations under section 753 must be filed with the Commission in accordance with 19 CFR 207.46(b), added by 60 FR 18, 22–23 (January 3, 1995). All requests should be addressed to: Secretary, U.S. International Trade Commission, 500 E Street, NW., Washington, DC 20436.

If investigations under section 753(a) of the Act are requested with respect to more than one countervailing duty order covering the same or comparable subject merchandise, the Commission may conduct such investigations jointly. Domestic interested parties, in their requests under section 753(a), may propose for the Commission's consideration countervailing duty orders suitable for joint consideration.

In addition, domestic interested parties that request an injury investigation under section 753(a) of the Act may request under section 751(c) of the Act that ''sunset reviews'' of any outstanding antidumping or countervailing duty order involving the same or comparable subject merchandise be expedited so that these reviews are conducted contemporaneously with the investigation(s) under section 753(a). Requests for expedited sunset reviews must be submitted to the Department in accordance with the procedures and requirements established for administrative reviews in 19 CFR 355.31 on the same day as the request for an investigation under section 753(a) is filed with the Commission. If the Department, after consulting with Commission, commences an expedited sunset review under section 751(c), the Commission may conduct contemporaneous proceedings under sections 751(c) and 753(a) of the Act and may cumulate imports from the subject countries.

Dated: May 23, 1995.

Susan G. Essermen,

Assistant Secretary for Import Administration.

Argentina: Apparel (C–357–404)
Argentina: Carbon Steel—Cold-Rolled Flat Products (C–357–005)
Argentina: Leather (C–357–803)
Argentina: Leather Wearing Apparel (C–357–001)
Argentina: Line Pipe (C–357–801)
Argentina: Non-Rubber Footwear (C–357–052)
Argentina: OCTG (C–357–403)
Argentina: Standard Pipe (C–357–801)
Argentina: Textile Mill Products (C–357–404)
Argentina: Tubing, Heavy-Walled Rectangular (C–357–801)
Argentina: Tubing, Light-Walled Rectangular (C–357–801)
Argentina: Wool (C–357–002)
Israel: Roses (C–508–064)
Malaysia: Extruded Rubber Thread (C–557–806)
Malaysia: Wire Rod, Carbon Steel (C–557–701)
Mexico: Ceramic Tile (C–201–003)
Mexico: Leather Wearing Apparel (C–201–001)
Mexico: Textile Mill Products (C–201–405)
New Zealand: Brazing Copper Rod & Wire (C–614–501)
New Zealand: Steel Wire (C–614–601)
New Zealand: Steel Wire Nails (C–614–701)
New Zealand: Wire Rod, Carbon Steel (C–614–504)
Peru: Cotton Sheeting and Sateen (C–333–001)
Peru: Cotton Yarn (C–333–002)
Peru: Rebar (C–333–502)
Peru: Textile Mill Products (C–333–402)
South Africa: Ferrochrome (C–791–001)
Sri Lanka: Textile Mill Products (C–542–401)
Thailand: Apparel (C–529–401)
Thailand: Butt-Weld Pipe Fittings (C–549–804)
Thailand: Malleable Iron Pipe Fittings (C–549–803)
Thailand: Steel Wire Rope (C–549–806)
Thailand: Pipe and Tube (C–549–501)
Thailand: Rice (C–549–503)
Thailand: Steel Wire Nails (C–549–701)
Venezuela: Circular Welded Nonalloy Steel Pipe (C–307–806)
Venezuela: Ferrosilicon (C–307–808) [1]
Zimbabwe: Wire Rod, Carbon Steel (C–796–601)

[FR Doc. 95–13164 Filed 5–25–95; 8:45 am]
BILLING CODE 3510–DS–M

[1] Zimbabwe became a signatory to the WTO on March 3, 1995, and Israel became a signatory to the WTO on April 21, 1995.

[1] Applies only to the dutiable merchandise within the scope of the order.

Minority Business Development Agency

Business Development Center Applications: Charleston, South Carolina

AGENCY: Minority Business Development Agency.

ACTION: Amendment.

SUMMARY: On page 24838, issue dated Wednesday, May 10, 1995, solicitation to operate the Charleston Minority Business Development Center is amended to read: *Metropolitan Area: Charleston, South Carolina, office to be located in the Charleston Small Business Resource Center, 284 King Street, Charleston, South Carolina 29401, telephone Number (803) 853–3900.* The closing date for applications is June 16, 1995.

FOR FURTHER INFORMATION AND AN APPLICATION PACKAGE, CONTACT: Robert Henderson at (404) 730–3300.

11.800 Minority Business Development Center
(Catalog of Federal Domestic Assistance)

Dated: May 23, 1995.

Frances B. Douglas,

Alternate Federal Register Liaison Officer, Minority Business Development Agency.

[FR Doc. 95–13022 Filed 5–25–95; 8:45 am]

BILLING CODE 3510–21–P

National Institute of Standards and Technology

Notice of Prospective Grant of Exclusive Patent License

AGENCY: National Institute of Standards and Technology, Commerce.

SUMMARY: This is a notice in accordance with 35 USC 209(c)(1) and 37 CFR 404.7(a)(1)(i) that the National Institute of Standards and Technology (''NIST''), U.S. Department of Commerce, is contemplating the grant of a field of use exclusive license in the following Countries: Australia, Austria, Brazil, Canada, France, Germany, Italy, Mexico, Norway, Spain, Sweden, Switzerland and the United Kingdom to practive the invention embodied in International Application Number PCT/US95/01063, titled, ''A Method and Composition For Promoting Improved Adhesion To Substrates'' to the American Dental Association Health Foundation, having a place of business in Chicago, Illinois. This invention was co-developed by the employees of the American Dental Association Health Foundation and NIST. The inventors' respective patent rights in this invention have been assigned to the American Dental Association Health Foundation and the United States of America.

FOR FURTHER INFORMATION CONTACT: Bruce E. Mattson, National Institute of Standards and Technology, Technology Development and Small Business Program, Building 221, Room B–256, Gaithersburg, MD 20899.

SUPPLEMENTARY INFORMATION: The prospective exclusive license will be royalty-bearing and will comply with the terms and conditions of 35 U.S.C. 209 and 37 CFR 404.7. The prospective exclusive license may be granted unless, within sixty days from the date of this published Notice, NIST receives written evidence and argument which establish the grant of the license would not be consistent with the requirements of 35 U.S.C. 209 and 37 CFR 404.7.

International Application Number PCT/US95/01063 is directed to methods and compositions for the improvement of adhesive bonding of acrylic resins to substrates found in industrial, natural and dental environments, such as those involved in dental restorations and for protective sealants.

NIST may enter into a Cooperative Research and Development Agreement (''CRADA'') to perform further research on the invention for purposes of commercialization. The CRADA may be conducted by NIST without any additional charge to any party that licenses the patent. NIST may grant the licensee an option to negotiate for royalty-free exclusive licenses to any jointly owned inventions which arise from the CRADA as well as an option to negotiate for exclusive royalty-bearing licenses for NIST employee inventions which arise from the CRADA.

The availability of the invention for licensing was published in the Federal Register, Vol. 59, No. 218 (November 14, 1994). A copy of the patent application may be obtained from NIST at the foregoing address.

Dated: May 22, 1995.

Samuel Kramer,

Associate Director.

[FR Doc. 95–12994 Filed 5–25–95; 8:45 am]

BILLING CODE 3510–13–M

National Oceanic and Atmospheric Administration

[I.D. 051095A]

Atlantic Coastal Fisheries Cooperative Management Act; Meeting

AGENCY: National Marine Fisheries Service (NMFS), National Oceanic and Atmospheric Administration (NOAA), Commerce.

ACTION: Coordination meeting.

SUMMARY: NMFS and the U.S. Fish and Wildlife Service will hold a joint meeting to discuss coordination of activities that support Atlantic States Marine Fisheries Commission coastal fisheries management plans under the Atlantic Coastal Fisheries Cooperative Act and the Atlantic Striped Bass Conservation Act.

DATES: The meeting will be held on June 14, 1995, at 10:00 a.m. to 3:00 p.m. and is open to the public.

ADDRESSES: The meeting will be held at the U.S. Fish and Wildlife Service Building, 4401 Fairfax Drive, Arlington, VA 22203.

FOR FURTHER INFORMATION CONTACT: Paul Perra, NMFS; telephone: (301) 713–2347.

Authority: Public Law 103–206 and Public Law 102–103.

Dated: May 19, 1995.

Richard W. Surdi,

Acting Director, Office of Fisheries Conservation and Management, National Marine Fisheries Service.

[FR Doc. 95–12934 Filed 5–25–95; 8:45 am]

BILLING CODE 3510–22–F

COMMITTEE FOR THE IMPLEMENTATION OF TEXTILE AGREEMENTS

Announcement of Import Restraint Limits for Certain Cotton, Wool, Man-Made Fiber, Silk Blend and Other Vegetable Fiber Textiles and Textile Products Produced or Manufactured in Hong Kong; Correction

May 22, 1995.

In the letter to the Commissioner of Customs in the table under the heading ''Category,'' make the following changes:

1. On page 17323, April 5, 1995, remove Categories 843 and 844 from Group II. The Group II designation will now read: 237, 239, 330–359, 431–459, 630–659, as a group;

2. On page 17324, April 5, 1995, add Categories 843 and 844 to Group III. The Group III designation will now read: 831–844 and 847–859, as a group.

Rita D. Hayes,

Chairman, Committee for the Implementation of Textile Agreements.

[FR Doc. 95–12945 Filed 5–25–95; 8:45 am]

BILLING CODE 3510–DR–F

Adjustment of Import Limits for Certain Cotton, Man-Made Fiber, Silk Blend and Other Vegetable Fiber Textile Products Produced or Manufactured in Macau

May 22, 1995.

AGENCY: Committee for the Implementation of Textile Agreements (CITA).

ACTION: Issuing a directive to the Commissioner of Customs reducing limits.

EFFECTIVE DATE: May 31, 1995.

FOR FURTHER INFORMATION CONTACT: Helen L. LeGrande, International Trade Specialist, Office of Textiles and Apparel, U.S. Department of Commerce, (202) 482–4212. For information on the quota status of these limits, refer to the Quota Status Reports posted on the bulletin boards of each Customs port or call (202) 927–6709. For information on embargoes and quota re-openings, call (202) 482–3715.

SUPPLEMENTARY INFORMATION:

Authority: Executive Order 11651 of March 3, 1972, as amended; section 204 of the Agricultural Act of 1956, as amended (7 U.S.C. 1854).

The current limits for certain categories are being reduced for carryforward used during 1994.

A description of the textile and apparel categories in terms of HTS numbers is available in the CORRELATION: Textile and Apparel Categories with the Harmonized Tariff Schedule of the United States (see **Federal Register** notice 59 FR 65531, published on December 20, 1994). Also see 60 FR 17331, published on April 5, 1995.

The letter to the Commissioner of Customs and the actions taken pursuant to it are not designed to implement all of the provisions of the Uruguay Round Agreements Act and the Uruguay Round Agreement on Textiles and Clothing, but are designed to assist only in the implementation of certain of their provisions.

Rita D. Hayes,

Chairman, Committee for the Implementation of Textile Agreements.

Committee for the Implementation of Textile Agreements

May 22, 1995.

Commissioner of Customs,
Department of the Treasury, Washington, DC 20229.

Dear Commissioner: This directive amends, but does not cancel, the directive issued to you on March 30, 1995, by the Chairman, Committee for the Implementation of Textile Agreements. That directive concerns imports of certain cotton, wool, man-made fiber, silk blend and other vegetable fiber textile products, produced or manufactured in Macau and exported during the twelve-month period which began on January 1, 1995 and extends through December 31, 1995.

Effective on May 31, 1995, you are directed to amend the directive dated March 30, 1995 to reduce the limits for the following categories, as provided under the terms of the Uruguay Round Agreements Act and the Uruguay Round Agreement on Textiles and Clothing:

Category	Adjusted twelve-month limit [1]
Levels in Group I 333/334/335/833/834/835.	215,907 dozen of which not more than 119,802 dozen shall be in Categories 333/335/833/835.
336/836	52,948 dozen.
338	278,175 dozen.
339	1,158,109 dozen.
340	274,708 dozen.
347/348/847	654,440 dozen.
351/851	61,281 dozen.
359–V [2]	101,813 kilograms.
647/648	483,764 dozen.

[1] The limits have not been adjusted to account for any imports exported after December 31, 1994.

[2] Category 359–V: only HTS numbers 6103.19.2030, 6103.19.9030, 6104.12.0040, 6104.19.8040, 6110.20.1022, 6110.20.1024, 6110.20.2030, 6110.20.2035, 6110.90.9044, 6110.90.9046, 6201.92.2010, 6202.92.2020, 6203.19.1030, 6203.19.9030, 6204.12.0040, 6204.19.8040, 6211.32.0070 and 6211.42.0070.

The Committee for the Implementation of Textile Agreements has determined that these actions fall within the foreign affairs exception to the rulemaking provisions of 5 U.S.C. 553(a)(1).

Sincerely,

Rita D. Hayes,

Chairman, Committee for the Implementation of Textile Agreements.

[FR Doc. 95–12944 Filed 5–25–95; 8:45 am]

BILLING CODE 3510–DR–F

Adjustment of an Import Limit for Certain Cotton and Man-Made Fiber Textile Products Produced of Manufactured in Malaysia

May 22, 1995.

AGENCY: Committee for the Implementation of Textile Agreements (CITA).

ACTION: Issuing a directive to the Commissioner of Customs reducing a limit.

EFFECTIVE DATE: May 31, 1995.

FOR FURTHER INFORMATION CONTACT: Ross Arnold, International Trade Specialist, Office of Textiles and Apparel, U.S. Department of Commerce, (202) 482–4212. For information on the quota status of this limit, refer to the Quota Status Reports posted on the bulletin boards of of each Customs port or call (202) 927–5850. For information on embargoes and quota re-openings, call (202) 482–3715.

SUPPLEMENTARY INFORMATION:

Authority: Executive Order 11651 of March 3, 1972, as amended; section 204 of the Agricultural Act of 1956, as amended (7 U.S.C. 1854).

The current limit for Categories 340/640 is being reduced for carryforward used during the previous period.

A description of the textile and apparel categories in terms of HTS numbers is available in the CORRELATION: Textile and Apparel Categories with the Harmonized Tariff Schedule of the United States (see **Federal Register** notice 59 FR 65531, published on December 20, 1994). Also see 60 FR 17332, published on April 5, 1995.

The letter to the Commissioner of Customs and the actions taken pursuant to it are not designed to implement all of the provisions of the Uruguay Round Agreements Act and the Uruguay Round Agreement on Textiles and Clothing, but are designed to assist only in the implementation of certain of their provisions.

Rita D. Hayes,

Chairman, Committee for the Implementation of Textile Agreements.

Committee for the Implementation of Textile Agreements

May 22, 1995.

Commissioner of Customs,
Department of the Treasury, Washington, DC 20229.

Dear Commissioner: This directive amends, but does not cancel, the directive issued to you on March 30, 1995, by the Chairman, Committee for the Implementation of Textile Agreements. That directive concerns imports of certain cotton, wool and man-made fiber textiles and textile products and silk blend and other vegetable fiber apparel, produced or manufactured in Malaysia and exported during the twelve-month period which began on January 1, 1995 and extends through December 31, 1995.

Effective on May 31, 1995, you are directed to amend the March 30, 1995 directive to reduce the limit for Categories 340/640 to 1,074,474 dozen [1], as provided under the terms of the Uruguay Round Agreements Act and the Uruguay Round Agreement on Textiles and Clothing.

The Committee for the Implementatin of Textile Agreements has determined that this action falls within the foreign affairs exception to the rulemaking provisions of 5 U.S.C.553(a)(1).

Sincerely,

Rita D. Hayes,

Chairman, Committee for the Implementatin of Textile Agreements.

[FR Doc.95–12946 Filed 5–25–95; 8:45 am]

BILLING CODE 3510–DR–F

Adjustment of Import Limits for Certain Cotton, Wool, Man-Made Fiber, Silk Blend and Other Vegetable Fiber Textile Products Produced or Manufactured in Thailand

May 22, 1995.

AGENCY: Committee for the Implementation of Textile Agreements (CITA).

[1] The limit has not been adjusted to account for any imports exported after December 31, 1994.

ACTION: Issuing a directive to the Commissioner of Customs reducing limits.

EFFECTIVE DATE: May 31, 1995.

FOR FURTHER INFORMATION CONTACT: Ross Arnold, International Trade Specialist, Office of Textiles and Apparel, U.S. Department of Commerce, (202) 482–4212. For information on the quota status of these limits, refer to the Quota Status Reports posted on the bulletin boards of each Customs port or call (202) 927–6717. For information on embargoes and quota re-openings, call (202) 482–3715.

SUPPLEMENTARY INFORMATION:

Authority: Executive Order 11651 of March 3, 1972, as amended; section 204 of the Agricultural Act of 1956, as amended (7 U.S.C. 1854).

The current limits for certain categories are being reduced for carryforward used in 1994. There may be further reductions later this year, if additional amounts of carryforward are used.

A description of the textile and apparel categories in terms of HTS numbers is available in the CORRELATION: Textile and Apparel Categories with the Harmonized Tariff Schedule of the United States (see **Federal Register** notice 59 FR 65531, published on December 20, 1994). Also see 60 FR 17337, published on April 5, 1995.

The letter to the Commissioner of Customs and the actions taken pursuant to it are not designed to implement all of the provisions of the Uruguay Round Agreements Act and the Uruguay Round Agreement on Textiles and Clothing, but are designed to assist only in the implementation of certain of their provisions.

Rita D. Hayes,

Chairman, Committee for the Implementation of Textile Agreements.

Committee for the Implementation of Textile Agreements

May 22, 1995.

Commissioner of Customs,
Department of the Treasury, Washington, DC 20229.

Dear Commissioner: This directive amends, but does not cancel, the directive issued to you on March 30, 1995 by the Chairman, Committee for the Implementation of Textile Agreements. That directive concerns imports of certain cotton, wool, man-made fiber, silk blend and other vegetable fiber textile products, produced or manufactured in Thailand and exported during the twelve-month period which began on January 1, 1995 and extends through December 31, 1995.

Effective on May 31, 1995, you are directed to reduce the current limits for the following categories, as provided under the Uruguay Round Agreements Act and the Uruguay Round Agreement on Textiles and Clothing:

Category	Adjusted twelve-month limit [1]
In Group I	
200	901,837 kilograms.
315	25,057,222 square meters.
604	562,665 kilograms of which not more than 382,173 kilograms shall be in Category 604–A [2].
619	5,411,024 square meters.
Group II	
237, 330–359, 431–459, 630–659 and 831–859, as a group.	231,664,280 square meters equivalent.
Sublevels in Group II	
334/634	478,949 dozen.
335/635/835	391,886 dozen.
336/636	245,815 dozen.
338/339	1,560,228 dozen.
351/651	180,367 dozen.

[1] The limits have not been adjusted to account for any imports exported after December 31, 1994.

[2] Category 604–A: only HTS number 5509.32.0000.

The Committee for the Implementation of Textile Agreements has determined that these actions fall within the foreign affairs exception to the rulemaking provisions of 5 U.S.C. 553(a)(1).

Sincerely,

Rita D. Hayes,

Chairman, Committee for the Implementation of Textile Agreements.

[FR Doc. 95–12947 Filed 5–25–95; 8:45 am]

BILLING CODE 3510–DR–F

COMMITTEE FOR PURCHASE FROM PEOPLE WHO ARE BLIND OR SEVERELY DISABLED PROCUREMENT LIST

Additions

AGENCY: Committee for Purchase From People Who Are Blind or Severely Disabled.

ACTION: Additions to the Procurement List.

SUMMARY: This action adds to the Procurement List commodities and services to be furnished by nonprofit agencies employing persons who are blind or have other severe disabilities.

EFFECTIVE DATE: June 26, 1995.

ADDRESSES: Committee for Purchase From People Who Are Blind or Severely Disabled, Crystal Square 3, Suite 403, 1735 Jefferson Davis Highway, Arlington, Virginia 22202–3461.

FOR FURTHER INFORMATION CONTACT: Beverly Milkman (703) 603–7740.

SUPPLEMENTARY INFORMATION: On December 16, 1994, February 10 and April 14, 1995, the Committee for Purchase From People Who Are Blind or Severely Disabled published notices (59 F.R. 65026, 60 F.R. 7945 and 19027) of proposed additions to the Procurement List.

After consideration of the material presented to it concerning capability of qualified nonprofit agencies to provide the commodities and services, fair market price, and impact of the additions on the current or most recent contractors, the Committee has determined that the commodities and services listed below are suitable for procurement by the Federal Government under 41 U.S.C. 46–48c and 41 CFR 51–2.4.

I certify that the following action will not have a significant impact on a substantial number of small entities. The major factors considered for this certification were:

1. The action will not result in any additional reporting, recordkeeping or other compliance requirements for small entities other than the small organizations that will furnish the commodities and services to the Government.

2. The action does not appear to have a severe economic impact on current contractors for the commodities and services.

3. The action will result in authorizing small entities to furnish the commodities and services to the Government.

4. There are no known regulatory alternatives which would accomplish the objectives of the Javits-Wagner-O'Day Act (41 U.S.C. 46–48c) in connection with the commodities and services proposed for addition to the Procurement List.

Accordingly, the following commodities and services are hereby added to the Procurement List:

Commodity

Compound, Corrosion Preventive
8030–00–262–7358
8030–00–260–1053

Services

Customer Service Representatives, General Services Administration, Region 3, Federal Supply Service Bureau, Philadelphia, Pennsylvania

Janitorial/Custodial, Navy Family Housing Units, Naval Construction Battalion Center, Port Hueneme, California

Janitorial/Custodial, Headquarters, DLA Complex, Building 2462, 8725 John J. Kingman Road, Fort Belvoir, Virginia

This action does not affect current contracts awarded prior to the effective date of this addition or options exercised under those contracts.

E.R. Alley, Jr.,

Deputy Executive Director.

[FR Doc. 95–13010 Filed 5–25–95; 8:45 am]

BILLING CODE 6820–33–P

Proposed Additions and Deletion

AGENCY: Committee for Purchase From People Who Are Blind or Severely Disabled.

ACTION: Proposed Additions to and Deletion from Procurement List.

SUMMARY: The Committee has received proposals to add to the Procurement List a commodity, military resale commodities and services to be furnished by nonprofit agencies employing persons who are blind or have other severe disabilities, and to delete a commodity previously furnished by such agencies.

COMMENTS MUST BE RECEIVED ON OR BEFORE: JUNE 26, 1995.

ADDRESSES: Committee for Purchase From People Who Are Blind or Severely Disabled, Crystal Square 3, Suite 403, 1735 Jefferson Davis Highway, Arlington, Virginia 22202–3461.

FOR FURTHER INFORMATION CONTACT: Beverly Milkman (703) 603–7740.

SUPPLEMENTARY INFORMATION: This notice is published pursuant to 41 U.S.C. 47(a) (2) and 41 CFR 51–2.3. Its purpose is to provide interested persons an opportunity to submit comments on the possible impact of the proposed actions.

Additions

If the Committee approves the proposed addition, all entities of the Federal Government (except as otherwise indicated) will be required to procure the commodity, military resale commodities and services listed below from nonprofit agencies employing persons who are blind or have other severe disabilities.

I certify that the following action will not have a significant impact on a substantial number of small entities. The major factors considered for this certification were:

1. The action will not result in any additional reporting, recordkeeping or other compliance requirements for small entities other than the small organizations that will furnish the commodity, military resale commodities and services to the Government.

2. The action does not appear to have a severe economic impact on current contractors for the commodity, military resale commodities and services.

3. The action will result in authorizing small entities to furnish the commodity, military resale commodities and services to the Government.

4. There are no known regulatory alternatives which would accomplish the objectives of the Javits-Wagner-O'Day Act (41 U.S.C. 46–48c) in connection with the commodity, military resale commodities and services proposed for addition to the Procurement List.

Comments on this certification are invited. Commenters should identify the statement(s) underlying the certification on which they are providing additional information.

The following commodity, military resale commodities and services have been proposed for addition to Procurement List for production by the nonprofit agencies listed:

Commodity

Tape, Electronic Data Processing
7045–01–370–9678
NPA: North Central Sight Services, Inc., Williamsport, Pennsylvania

Military Resale Commodities

Christmas Textile Ensemble
M.R. 976
NPA: Chester County Branch of the Pennsylvania Association for the Blind, Coatesville, Pennsylvania

Military Resale Commodities

Pad, Scouring
M.R. 547
NPA: Beacon Lighthouse, Inc., Wichita Falls, Texas

Pad, Scouring
M.R. 560
NPA: Columbia Lighthouse for the Blind, Washington, DC
Beacon Lighthouse, Inc., Wichita Falls, Texas

Servces

Administrative Services, Naval Air Station, Cecil Field, Florida
NPA: CCAR Services, Inc., Green Cove Springs, Florida

Remanufacturing HP4 Laser Toner Cartridges, Malmstrom Air Force Base, Montana
NPA: Community Options Resource Enterprises, Inc., Billings, Montana

Deletion

The following commodity has been proposed for deletion from the Procurement List:

Candle, Illuminating
6260–00–840–5578

E.R. Alley, Jr.,

Deputy Executive Director.

[FR Doc. 95–13009 Filed 5–25–95; 8:45 am]

BILLING CODE 6820–33–P

COMMODITY FUTURES TRADING COMMISSION

Applications of the Coffee, Sugar & Cocoa Exchange as a Contract Market in Milk Futures and Options Contracts

AGENCY: Commodity Futures Trading Commission.

ACTION: Notice of availability of the terms and conditions of proposed commodity futures and option contracts.

SUMMARY: The Coffee, Sugar & Cocoa Exchange (CSCE or Exchange) has applied for designation as a contract market in futures and options on milk. The Director of the Division of Economic Analysis (Division) of the Commission, acting pursuant to the authority delegated by the Commission Regulation 140.96, has determined that publication of the proposals for comment is in the public interest, will assist the Commission in considering the views of interested persons, and is consistent with the purposes of the Commodity Exchange Act.

DATES: Comments must be received on or before June 26, 1995.

ADDRESSES: Interested persons should submit their views and comments to Jean A. Webb, Secretary, Commodity Futures Trading Commission, 2033 K Street NW., Washington, DC 20581. Reference should be made to the CSCE contract markets on milk.

FOR FURTHER INFORMATION CONTACT: Please contact Fred Linse of the Division of Economic Analysis, Commodity Futures Trading Commission, 2033 K Street NW., Washington, DC 20581, telephone 202–254–7303.

SUPPLEMENTARY INFORMATION: Copies of the terms and conditions will be available for inspection at the Office of the Secretariat, Commodity Futures Trading Commission, 2033 K Street NW., Washington, DC 20581. Copies of the terms and conditions can be obtained through the Office of the Secretariat by mail at the above address or by phone at (202) 254–6314.

Other materials submitted by the CSCE in support of the applications for contract market designation may be available upon request pursuant to the Freedom of Information Act (5 U.S.C. 552) and the Commission's regulations thereunder (17 CFR part 145 (1987)), except to the extent they are entitled to confidential treatment as set forth in 17 CFR 145.5 and 145.9. Requests for copies of such materials should be made to the FOI, Privacy and Sunshine Act Compliance Staff of the Office of the

Secretariat at the Commission's headquarters in accordance with 17 CFR 145.7 and 145.8.

Any person interested in submitting written data, views, or arguments on the proposed terms and conditions, or with respect to other materials submitted by the CSCE, should send such comments to Jean A. Webb, Secretary, Commodity Futures Trading Commission, 2033 K Street NW., Washington, DC 20581 by the specified date.

Issued in Washington, DC, on May 19, 1995.

Blake Imel,

Acting Director.

[FR Doc. 95–12991 Filed 5–25–95; 8:45 am]

BILLING CODE 6351–01–M

DEPARTMENT OF ENERGY

Environmental Management Site Specific Advisory Board, Hanford Site

AGENCY: Department of Energy.

ACTION: Notice of open meeting.

SUMMARY: Pursuant to the provisions of the Federal Advisory Committee Act (Public Law 92–463, 86 Stat. 770) notice is hereby given of the following Advisory Committee meeting: Environmental Management Site Specific Advisory Board (EM SSAB), Hanford Site.

DATES: Thursday, June 1: 9:00 a.m.–5:00 p.m.; Friday, June 2: 8:30 a.m.–4:00 p.m.

ADDRESSES: Red Lion Columbia River, 1401 N. Hayden Island Drive, Portland, Oregon.

FOR FURTHER INFORMATION CONTACT: Jon Yerxa, Public Participation Coordinator, Department of Energy Richland Operations Office, P.O. Box 550, Richland, WA, 99352.

SUPPLEMENTARY INFORMATION: Purpose of the Board: The purpose of the Board is to make recommendations to DOE and its regulators in the areas of environmental restoration, waste management, and related activities.

Tentative Agenda

June Meeting Topics

The Hanford Advisory Board will receive information on and discuss issues related to: Privatization, Risk Assessment, St. Louis Plan Implementation, the '97 Budget, the M&O Contract Rebid Process, and the USDOE–HQ Risk Report for Congress. The Committee will also receive updates from various Subcommittees, including reports on: the Board Progress Report, and the Board Schedule and Operating Plan for FY '96.

Public Participation: The meeting is open to the public. Written statements may be filed with the Committee either before or after the meeting. Individuals who wish to make oral statements pertaining to agenda items should contact Jon Yerxa's office at the address or telephone number listed above. Requests must be received 5 days prior to the meeting and reasonable provision will be made to include the presentation in the agenda. The Designated Federal Official is empowered to conduct the meeting in a fashion that will facilitate the orderly conduct of business. Each individual wishing to make public comment will be provided a maximum of 5 minutes to present their comments. Due to programmatic issues that had to be resolved, the **Federal Register** notice is being published less than fifteen days before the date of the meeting.

Minutes: The minutes of this meeting will be available for public review and copying at the Freedom of Information Public Reading Room, 1E–190, Forrestal Building, 1000 Independence Avenue, SW., Washington, DC 20585 between 9:00 a.m. and 4 p.m., Monday–Friday, except Federal holidays. Minutes will also be available by writing to Jon Yerxa, Department of Energy Richland Operations Office, P.O. Box 550, Richland, WA 99352, or by calling him at (509)–376–9628.

Issued at Washington, DC on May 23, 1995.

Rachel M. Samuel,

Acting Deputy Advisory Committee Management Officer.

[FR Doc. 95–13008 Filed 5–25–95; 8:45 am]

BILLING CODE 6450–01–P

Federal Energy Regulatory Commission

[Docket No. MG92–3–002]

Pacific Gas Transmission Company; Notice of Filing

May 22, 1995

Take notice that on May 12, 1995, Pacific Gas Transmission Company (PGT) submitted revised standards of conduct to incorporate the changes required by Order Nos. 566 *et seq.*[1] and the Commission's Order issued April 19, 1995 in Docket No. MG92–3–001.

PGT states that all parties of record in the above-referenced docket have been served with copies of this filing, as well as all jurisdictional customers and interested state regulatory agencies.

Any person desiring to be heard or to protest said filing should file a motion to intervene or protest with the Federal Energy Regulatory Commission, 825 North Capitol Street, NE., Washington, DC, 20426, in accordance with Rules 211 or 214 of the Commission's Rules of Practice and Procedure (18 CFR 385.211 or 385.214 (1991)). All such motion to intervene or protest should be filed on or before June 6, 1995. Protests will be considered by the Commission in determining the appropriate action to be taken but will not serve to make protestants parties to the proceeding. Any person wishing to become a party must file a motion to intervene. Copies of this filing are on file with the Commission and are available for public inspection.

Linwood A. Watson, Jr.,

Acting Secretary.

[FR Doc. 95–12923 Filed 5–25–95; 8:45 am]

BILLING CODE 6717–01–M

[Docket No. CP95–503–000]

Tennessee Gas Pipeline Company; Notice of Request Under Blanket Authorization

May 22, 1995.

Take notice that on May 18, 1995, Tennessee Gas Pipeline Company (Tennessee), P.O. Box 2511, Houston, Texas 77252, filed in Docket No. CP95–503–000 a request pursuant to Sections 157.205 and 157.212 of the Commission's Regulations under the Natural Gas Act (18 CFR 157.205, 157.212) for authorization to construct and operate delivery point facilities in Humphreys County, Mississippi, in order to deliver gas to Producer Feed Company (PFC) under Tennessee's blanket certificate issued in Docket No. CP82–413–000 pursuant to Section 7 of the Natural Gas Act, all as more fully set forth in the request that is on file with the Commission and open to public inspection.

Tennessee proposes to construct a delivery point to enable PFC to receive gas under various transportation arrangements. Tennessee states that the estimated cost of the proposed facilities will be $105,220, which will be reimbursed to Tennessee by PFC.

Any person or the Commission's staff may, within 45 days after issuance of the instant notice by the Commission,

[1] Standards of Conduct and Reporting Requirements for Transportation and Affiliate Transactions, Order No. 566, 59 FR 32885 (June 27, 1994), III FERC Stats. & Regs. ¶30,997 (June 17, 1994); Order No. 566–A, *Order on rehearing*, 59 FR 52896 (October 20, 1994), 69 FERC ¶61,044 (October 14, 1994); Order No. 566–B, *order on rehearing*, 59 FR 65707, (December 21, 1994); 69 FERC ¶61,334 (December 14, 1994): *appeal docketed sub nom. Conoco, Inc.* v. *FERC*, D.C. Cir No. 94–1745 (December 13, 1994).

file pursuant to Rule 214 of the Commission's Procedural Rules (18 CFR 385.214) a motion to intervene or notice of intervention and pursuant to § 157.205 of the Regulations under the Natural Gas Act (18 CFR 157.205) a protest to the request. If no protest is filed within the time allowed therefore, the proposed activity shall be deemed to be authorized effective the day after the time allowed for filing a protest. If a protest is filed and not withdrawn within 30 days after the time allowed for filing a protest, the instant request shall be treated as an application for authorization pursuant to Section 7 of the Natural Gas Act.

Linwood A. Watson, Jr.,

Acting Secretary.

[FR Doc. 95–12922 Filed 5–25–95; 8:45 am]

BILLING CODE 6717–01–M

[Docket No. PL94–3–000]

City of Hamilton, Ohio; Order on Request for Designation of Market Center

Issued May 22, 1995.

On May 23, 1994, the City of Hamilton, Ohio (Hamilton) filed a Request to Designate Lebanon, Ohio a Market Center and to require Tariff Changes. The City of Hamilton,[1] a municipal gas system located in Butler County, Ohio, serves approximately 23,000 residential, commercial, and industrial customers. Hamilton is located approximately 16 miles from Lebanon, Ohio. Within a 20-mile radius of Lebanon, five interstate pipelines interconnect.[2]

Hamilton requests that the Commission issue a policy statement designating Lebanon, Ohio as a market center and requiring changes to the tariffs of the interstate pipelines which connect in the Lebanon Market Center. Hamilton asserts that certain tariff provisions currently impede the development of an efficient market center at Lebanon. Hamilton contends that use of a policy statement in this case is consistent with continued implementation of the Commission's mandate in Order No. 636[3] for pipelines to remove impediments to the development of market centers.

Discussion

We agree with the City of Hamilton that market centers should be encouraged to develop and allowed to operate so that both the industry and consumers of natural gas will benefit. The Commission has made clear its intent that market centers should develop and that rate structures not inhibit market centers. Consistent with the basic operational characteristics of the market, Order no. 636 states the Commission's belief that market centers should develop naturally and that the Commission should not designate market centers.[4] Market centers have developed since Order No. 636 without the Commission designating locations as market centers.

Hamilton specifies some of its concerns regarding the efficiency of the running of a market center at Lebanon and expresses concerns about the consideration of other issues in individual proceedings. There is more to be considered here than economy of administrative effort, however. The Commission's policy that market centers should evolve naturally does not compromise Hamilton's interests. Hamilton has raised and may raise tariff and rate issues in particular pipelines' individual rate cases.[5] Discussion among the pipelines to better coordinate their operations is also encouraged.

For these reasons, the Commission sees no reason to change its policy now. The market is better able than the Commission to determine where market centers should be located. As we have already stated, unless a market center proposal or specific rate and tariff terms violate the Commission's rules and regulations, the Commission is unlikely to intrude on the natural process of development of a market center. Accordingly, the Commission will not designate Lebanon a market center and Hamilton's request that the Commission generally review pipeline operations and tariffs is denied.

The Commission orders

The request for designation of Lebanon, Ohio as a market center and for a general review of pipeline tariffs and operations is denied.

By the Commission.

Linwood A. Watson, Jr.,

Acting Secretary.

[FR Doc. 95–12989 Filed 5–25–95; 8:45 am]

BILLING CODE 6717–01–M

[Docket No. EG95–51–000, et al.]

CNG Power Services Corporation, et al., Electric Rate and Corporate Regulation Filings

May 19, 1995.

Take notice that the following filings have been made with the Commission:

1. CNG Power Services Corporation

[Docket No. EG95–51–000]

On May 15, 1995, CNG Power Services Corporation (''CNGPS''), One Park Ridge Center, Box 15746, Pittsburgh, PA 15222, filed with the Federal Energy Regulatory Commission (''Commission'') an application for a new determination of exempt wholesale generator status, due to changed circumstances resulting from certain

---

[1] Hamilton states that it is directly connected to two interstate pipeline systems, Texas Gas Transmission Corporation (Texas Gas) and Texas Eastern Transmission Corporation (Texas Eastern), and has contracted for substantial storage capacity on ANR Pipeline Company (ANR); these three pipelines interconnect in the area of Lebanon, Ohio.

[2] Hamilton states that: (1) these pipelines are ANR, Columbia Gas Transmission Corporation, CNG Transmission Corporation, Texas Eastern, and Texas Gas; (2) Panhandle Eastern Pipe Line Company also delivers gas to Lebanon through facilities owned by Texas Eastern and ANR (''the Lebanon Lateral''); (3) all major producing areas, including Canada, are accessible through at least one of these pipelines; (4) several storage areas are accessible to the Lebanon area.

[3] Pipeline Service Obligations and Revisions to Regulations Governing Self-Implementing Transportation; and Regulation of Natural Gas Pipelines After Partial Wellhead Decontrol, 57 Fed. Reg. 13,267 (April 16, 1992), III FERC Stats. & Regs. Preambles ¶ 30,939 (April 8, 1992); *order on reh'g,* Order No. 636–A, 57 Fed. Reg. 36,128 (August 12, 1992, III Stats. & Regs. Preambles ¶ 30,950 (August 3, 1992); *order on reh'g,* Order No. 636–B, 57 Fed. Reg. 57,911 (December 8, 1992), 61 FERC ¶ 61,272 (November 27, 1992) *appeal redocketed sub nom.,* Atlanta Gas Light Company and Chattanooga Gas Company, *et al.* v. *FERC,* No. 94–1171 (D.C. Cir. (May 27, 1994).

[4] The Commission stated that it was adopting Order No. 636

> in order to facilitate the meeting of gas purchasers and gas sellers in a national gas market. Market centers may, in certain areas, create additional meeting places for gas purchasers and gas sellers. These inter-pipeline market centers would allow gas from production areas attached to different pipelines to meet where the pipelines intersect to create a market for gas purchasers from different market areas. The Commission believes that market centers should develop naturally and, therefore, will not mandate market centers. However, as stated above, the Commission is requiring in new Sections 284.8(b)(5) and 284.9(b)(5) that there must be nothing in a pipeline's tariff that inhibits the development of market centers. (Order No. 636, ¶ 30,939 at 30,427–28. *Emphasis added*; footnote omitted.)

The Commission provided specific examples of rate structures that may inhibit market centers. In various restructuring proceedings, the Commission provided examples of those rate structures which may impede the development of market centers. *See* Transcontinental Gas Pipe Line Corporation, 63 FERC ¶ 61,194 at 62,501 (1993), and Arkla Energy Resources Company, 62 FERC ¶ 61,076 at 61,461 (1993).

[5] In Texas Eastern Transmission Corporation's (Texas Eastern) one year restructuring report, Hamilton State that Texas Eastern's backhaul service was merely a transfer of gas within a market center and that a rate reduction was appropriate. Citing the Commission's earlier order on restructuring, the Commission said that:

> The Commission continues to believe, as it previously advised Hamilton, that the appropriate place to discuss the maximum rate for backhaul services is in Texas Eastern's next rate case proceeding. 69 FERC ¶ 61,362, 62,370 (1994).

proposed transactions, pursuant to Part 365 of the Commission's Regulations.

Comment date: May 30, 1995, in accordance with Standard Paragraph E at the end of this notice. The Commission will limit its consideration of comments to those that concern the adequacy or accuracy of the application.

2. California Department of Water Resources v. Nevada Power Company

[Docket No. EL95–43–000]

Take notice that on May 4, 1995, the California Department of Water Resources (Department) tendered for filing a complaint for refund, plus interest, of the excess transmission charges the Department has paid, under protest, for the period January 1, 1990 under the formula rate submitted by Nevada Power Company as part of its amnesty filing in Docket No. ER94–305–000.

Comment date: June 19, 1995, in accordance with Standard Paragraph E at the end of this notice.

3. Commonwealth Edison Company

[Docket No. ER93–390–001]

Take notice that on May 5, 1995, Commonwealth Edison Company (ComEd) submitted an amendment to the Resource Power Service Schedule to the Interconnection Agreement, dated March 1, 1975, between ComEd and Wisconsin Power and Light Company (Wisconsin Power).

Copies of this filing were served upon Wisconsin Power, the Illinois Commerce Commission, and the Public Service Commission of Wisconsin.

Comment date: June 2, 1995, in accordance with Standard Paragraph E at the end of this notice.

4. Howell Power Systems

[Docket No. ER94–178–005]

Take notice that on April 25, 1995, Howell Power Systems tendered for filing certain information as required by the Commission's order dated January 14, 1994. Copies of the informational filing are on file with the Commission and are available for public inspection.

5. Concord Electric Company

[Docket No. ER94–692–002]

Take notice that on April 21, 1995, Concord Electric Company tendered for filing its refund report in this docket pursuant to the Commission's letter order issued on March 23, 1995.

Comment date: June 2, 1995, in accordance with Standard Paragraph E at the end of this notice.

6. AES Power, Inc.

[Docket No. ER94–890–005]

Take notice that on May 2, 1995, AES Power, Inc. tendered for filing certain information as required by the Commission's letter order dated April 18, 1994. Copies of the informational filing are on file with the Commission and are available for public inspection.

7. Eastern Power Distribution, Inc.

[Docket No. ER94–964–005]

Take notice that on April 25, 1995, Eastern Power Distribution, Inc. tendered for filing certain information as required by the Commission's letter order dated April 5, 1994. Copies of the informational filing are on file with the Commission and are available for public inspection.

8. Electric Clearinghouse, Inc.

[Docket No. ER94–968–006]

Take notice that on May 2, 1995, Electric Clearinghouse, Inc. filed certain information as required by the Commission's April 7, 1994, letter order. Copies of the informational filing are on file with the Commission and are available for public inspection.

9. Vesta Energy Alternatives Company

[Docket No. ER94–1168–004]

Take notice that on April 25, 1995, Vesta Energy Alternatives Company filed certain information as required by the Commission's orders dated July 8, July 20, November 28 and December 7, 1994 letter orders. Copies of the informational filing are on file with the Commission and are available for public inspection.

10. Ashton Energy Corporation

[Docket No. ER94–1246–003]

Take notice that on April 24, 1995, Ashton Energy Corporation tendered for filing certain information as required by the Commission's order dated August 10, 1994. Copies of the informational filing are on file with the Commission and are available for public inspection.

11. Midcon Power Services Corporation

[Docket No. ER94–1329–003]

Take notice that on April 28, 1995, Midcon Power Services Corporation tendered for filing certain information as required by the Commission's letter order dated August 11, 1994. Copies of the informational filing are on file with the Commission and are available for public inspection.

12. R. J. Dahnke & Association

[Docket No. ER94–1352–003]

Take notice that on May 1, 1995, R.J. Dahnke & Association tendered for filing certain information as required by the Commission's letter order dated August 13, 1994. Copies of the informational filing are on file with the Commission and are available for public inspection.

13. Morgan Stanley Capital Group, Inc.

[Docket No. ER94–1384–005]

Take notice that on April 28, 1995, Morgan Stanley Capital Group, Inc. tendered for filing certain information as required by the Commission's letter order dated November 18, 1994. Copies of the informational filing are on file with the Commission and are available for public inspection.

14. JEB Corporation

[Docket No. ER94–1432–003]

Take notice that on April 28, 1995, JEB Corporation tendered for filing certain information as required by the Commission's letter order dated September 8, 1994. Copies of the informational filing are on file with the Commission and are available for public inspection.

15. Coastal Electric Services Company

[Docket No. ER94–1450–003]

Take notice that on May 2, 1995, Coastal Electric Services Company filed certain information as required by the Commission's September 29, 1994 order. Copies of the informational filing are on file with the Commission and are available for public inspection.

16. Excel Energy Services, Inc.

[Docket No. ER94–1488–003]

Take notice that on May 5, 1995, Excel Energy Services, Inc. tendered for filing certain information as required by the Commission's letter order dated September 29, 1994. Copies of the informational filing are on file with the Commission and are available for public inspection.

17. Calpine Power Marketing Inc.

[Docket No. ER94–1545–001]

Take notice that on May 4, 1995, Calpine Power Marketing Inc. filed certain information as required by the Commission's March 9, 1995, letter order. Copies of the informational filing are on file with the Commission and are available for public inspection.

18. Hadson Electric, Inc.

[Docket No. ER94–1613–002]

Take notice that on May 1, 1995, Hadson Electric, Inc. filed certain information as required by the Commission's November 17, 1994 order. Copies of the informational filing are on

file with the Commission and are available for public inspection.

19. Texas Ohio Power Marketing, Inc.

[Docket No. ER94–1676–002]

Take notice that on May 16, 1995, Texas Ohio Power Marketing, Inc. tendered for filing certain information as required by the Commission's letter order dated December 2, 1994. Copies of the informational filing are on file with the Commission and are available for public inspection.

20. Associated Power Services, Inc.

[Docket No. ER95–7–003]

Take notice that on April 24, 1995, Associated Power Services, Inc. tendered for filing certain information as required by the Commission's order dated December 16, 1994. Copies of the informational filing are on file with the Commission and are available for public inspection.

21. Wisconsin Electric Power Company

[Docket No. ER95–771–000]

Take notice that Wisconsin Electric Power Company (Wisconsin) tendered for filing on May 16, 1995, an amendment of its filing in the above-referenced docket. The amendment reduces the transmission component of charges for services under FERC Electric Tariff, Original Volume No. II (the Coordination Sales Tariff).

Wisconsin Electric requests an effective date sixty days after its initial filing in this proceeding.

Copies of the filing have been served on all customers under the Coordination Sales Tariff, as well as the state commissions in which such customers distribute and sell electric energy.

Comment date: June 2, 1995, in accordance with Standard Paragraph E at the end of this notice.

22. New York State Electric & Gas Corporation

[Docket No. ER95–1012–000]

Take notice that on May 4, 1995, New York State Electric & Gas Corporation (NYSEG), tendered for filing pursuant to § 35.12 of the Federal Energy Regulatory Commission's Rules of Practice and Procedure, 18 CFR 35.12, as an initial rate schedule, an agreement with Atlantic City Electric Company (ACE). The agreement provides a mechanism pursuant to which the parties can enter into separately scheduled transactions under which NYSEG will sell to ACE and ACE will purchase from NYSEG either capacity and associated energy or energy only as the parties may mutually agree.

NYSEG requests that the agreement become effective on May 5, 1995, so that the parties may, if mutually agreeable, enter into separately scheduled transactions under the agreement. NYSEG has requested waiver of the notice requirements for good cause shown.

NYSEG served copies of the filing upon the New York State Public Service Commission and ACE.

Comment date: June 2, 1995, in accordance with Standard Paragraph E at the end of this notice.

23. Florida Power Corporation

[Docket No. ER95–1013–000]

Take notice that on May 4, 1995, Florida Power Corporation requested the Commission to disclaim jurisdiction over an Operation and Maintenance Agreement with Orange Cogeneration Limited Partnership executed on April 12, 1995. In the alternative, Florida Power Corporation requested that the agreement be accepted for filing and allowed to become effective on July 5, 1995.

Comment date: June 2, 1995, in accordance with Standard Paragraph E at the end of this notice.

24. Public Service Electric and Gas Company

[Docket No. ER95–1014–000]

Take notice that on May 5, 1995, Public Service Electric and Gas Company (PS), tendered for filing Supplemental Agreement Between Atlantic City Electric Company (ACE) and PS amending the original March 1, 1969 agreement, as supplemented (PS FERC Rate Schedule No. 43).

PS states that the reason for the filing is to cover the facilities, cost sharing, and payments associated with supplying service to ACE's Tabernacle Substation.

PS requests that the filing be permitted to become effective as of the date the Tabernacle supply facilities were placed in service December 20, 1994 and therefore requests waiver of the Commission's notice requirements.

PS states that a copy of this filing has been sent to ACE and to the New Jersey Board of Public Utilities.

Comment date: June 2, 1995, in accordance with Standard Paragraph E at the end of this notice.

25. Southwestern Public Service Company

[Docket No. ER95–1015–000]

Take notice that on May 5, 1995, Southwestern Public Service Company (Southwestern), tendered for filing the proposed amendments to its rate schedule for service to Lyntegar Electric Cooperative, Inc. (Lyntegar).

The proposed amendments reflect:

1. Two new delivery points and a temporary duplicated delivery point with an associated monthly service charge of $178 per month per delivery point;

2. Changes in the maximum commitment at various delivery points;

3. A CIAC agreement for a one time charge of $21,988 to recover Southwestern's expense in providing a service to one of the new delivery points;

4. A CIAC agreement for a one time charge of $13,137 to recover Southwestern's expense in providing a duplicative delivery point; and

5. Two CIAC agreements for a one time charge totaling $1,970.72 to recover costs Southwestern incurred in modifying its existing facilities to allow proper clearance for Lyntegar's new distribution facilities.

Comment date: June 2, 1995, in accordance with Standard Paragraph E at the end of this notice.

26. Southwestern Public Service Company

[Docket No. ER95–1016–000]

Take notice that on May 5, 1995, Southwestern Public Service Company (Southwestern), tendered for filing proposed amendments to contracts for service to Cap Rock Electric Cooperative, Inc. (Cap Rock).

The proposed amendments (1) Increases the commitment from 115,000 Kw to 120,000 Kw, (2) reduces the Dedicated Segment Charge and Dedicated Facilities Charge, and (3) assigns the contracts to New Corp Resources, Inc. (New Corp).

Comment date: June 2, 1995, in accordance with Standard Paragraph E at the end of this notice.

27. Alabama Power Company

[Docket No. ER95–1019–000]

Take notice that on May 8, 1995, Alabama Power Company tendered for filing a revised Delivery Point Specification Sheet dated as of April 20, 1995, reflecting the change in contracted voltage levels for a delivery point for electricity delivery to the City of Piedmont, Alabama. The delivery point will continue to be served under the terms and conditions of the Agreement for Partial Requirements Service and Complementary Services between Alabama Power Company and the Alabama Municipal Electric Authority dated February 24, 1986, being designated as FERC Rate Schedule No. 165. The parties request an effective date of April 20, 1995.

Comment date: June 2, 1995, in accordance with Standard Paragraph E at the end of this notice.

28. Louisville Gas and Electric Company

[Docket No. ER95–1020–000]

Take notice that on May 8, 1995, Louisville Gas and Electric Company, tendered for filing a copy of a service agreement between Louisville Gas and Electric Company and ENRON Power Marketing, Inc., under Rate GSS.

Comment date: June 2, 1995, in accordance with Standard Paragraph E at the end of this notice.

29. Energy Services, Inc.

[Docket No. ER95–1021–000]

Take notice that on May 8, 1995, Energy Services, Inc. (ESI), tendered for filing Electric Service Rate Schedule No. 1, together with a petition for waivers and blanket approvals of various Commission Regulations necessary for such Rate Schedule to become effective 60 days after the date of the filing.

ESI states that it intends to engage in electric power and energy transactions as a marketer and a broker, and that it proposes to make sales under rates, terms and conditions to be mutually agreed to with the purchasing party. ESI further states that it does not own any generation or transmission facilities.

Comment date: June 2, 1995, in accordance with Standard Paragraph E at the end of this notice.

30. Texas-New Mexico Power Company

[Docket No. ES95–32–000]

Take notice that on May 12, 1995, Texas-New Mexico Power Company filed an application under § 204 of the Federal Power Act seeking authorization to issue short-term promissory notes and other evidence of indebtedness aggregating not more than $25 million principal amount outstanding at any one time, during the period ending June 1, 1997, with final maturities not later than June 1, 1998.

Comment date: June 12, 1995, in accordance with Standard Paragraph E at the end of this notice.

31. Energy Resource Marketing, Inc.

[Docket No. ER94–1580–002]

Take notice that on May 15, 1995, Energy Resource Marketing, Inc. tendered for filing certain information as required by the Commission's order dated September 30, 1994. Copies of the informational filing are on file with the Commission and are available for public inspection.

Standard Paragraphs

E. Any person desiring to be heard or to protest said filing should file a motion to intervene or protest with the Federal Energy Regulatory Commission, 825 North Capitol Street, NE., Washington, DC 20426, in accordance with Rules 211 and 214 of the Commission's Rules of Practice and Procedure (18 CFR 385.211 and 18 CFR 385.214). All such motions or protests should be filed on or before the comment date. Protests will be considered by the Commission in determining the appropriate action to be taken, but will not serve to make protestants parties to the proceeding. Any person wishing to become a party must file a motion to intervene. Copies of this filing are on file with the Commission and are available for public inspection.

Linwood A. Watson, Jr.,

Acting Secretary.

[FR Doc. 95–12921 Filed 5–25–95; 8:45 am]

BILLING CODE 6717–01–P

[Project No. 11077–001]

Alaska Power and Telephone Company; Notice of Intent to Conduct Environmental Scoping Meetings and Site Visit

May 23, 1995.

The Federal Energy Regulatory Commission (FERC) has received an application for a license of the proposed Goat Lake Hydroelectric Project, Project No. 11077–001. The project is proposed by Alaska Power and Telephone Company (Alaska Power). The project would be located along Pitchfork Falls, a tributary to the Skagway River, about 7 miles northeast of Skagway, in southeast Alaska. The project lies almost exclusively on U.S. Forest (FS) property.

The FERC and FS (staff) intend to prepare an Environmental Assessment (EA) on the proposed Goat Lake Hydroelectric Project in accordance with the National Environmental Policy Act. In the EA, staff will consider both site-specific and cumulative environmental impacts of the project and reasonable alternatives, and will include an economic, financial, and engineering analysis.

The draft EA will be issued and circulated for review by all interested parties. All comments filed on the draft EA will be analyzed and considered by the staff in a final EA. The staff's conclusions and recommendations will then be presented for the consideration by the Commission in reaching its final licensing decision.

Scoping Meetings

Staff will hold two scoping meetings. A scoping meeting oriented towards the public will be held on June 20, 1995 at 7 p.m., at the Skagway School, Multipurpose Room, 15th Avenue and Main Street, Skagway, Alaska. A scoping meeting oriented towards the agencies will be held on June 22, 1995 at 9:30 a.m., at the U.S. Forest Service, Juneau Ranger District, Conference Room, 8465 Old Dairy Road, Juneau, Alaska.

Interested individuals, organizations, and agencies are invited to attend either or both meetings and assist the staff in identifying the scope of environmental issues that should be analyzed in the EA.

To help focus discussions at the meetings, a scoping document outlining subject areas to be addressed in the EA will be mailed to agencies and interested individuals on the FERC mailing list. Copies of the scoping document will also be available at the scoping meetings.

Objectives

At the scoping meetings the staff will: (1) Identify preliminary environmental issues related to the proposed project; (2) identify preliminary resource issues that are not important and do not require detailed analysis; (3) identify reasonable alternatives to be addressed in the EA; (4) solicit from the meeting participants all available information, especially quantified data, on the resource issues; and (5) encourage statements from experts and the public on issues that should be analyzed in the EA, including points of view in opposition to, or in support of, the staff's preliminary views.

Procedures

The scoping meetings will be recorded by a court reporter and all statements (oral and written) will become part of the formal record of the FERC proceedings on the Goat Lake Hydroelectric Project. Individuals presenting statements at the meetings will be asked to clearly identify themselves for the record.

Individuals, organizations, and agencies with environmental expertise and concerns are encouraged to attend the meetings and assist the staff in defining and clarifying the issues to be addressed in the EA.

Persons choosing not to speak at the meetings, but who have views on the issues or information relevant to the issues, may submit written statements for inclusion in the public record at the meetings. In addition, written scoping

comments may be filed with the Secretary, Federal Energy Regulatory Commission, 825 North Capitol Street, NE., Washington, DC 20426, until July 22, 1995.

All written correspondence should clearly show the following caption on the first page: Goat Lake Hydroelectric Project, FERC Project No. 11077–001.

Intervenors—those on the FERC's service list for this proceeding (parties)—are reminded of the FERC's Rules of Practice and Procedure, requiring parties filing documents with FERC, to serve a copy of the document on each person whose name appears on the official service list. Further, if a party or interceder files comments or documents with FERC relating to the merits of an issue that may affect the responsibilities of a particular resource agency, they must also serve a copy of the document on that resource agency.

Site Visit

A site visit to the proposed Goat Lake Hydroelectric Project is planned for Tuesday, June 20, 1995, and is intended to provide interested parties a first hand observation of the project site. Because of the remoteness and difficulty of ground access at the proposed project site, we intend to provide helicopter shuttle to the site. To plan on helicopter use in advance of the visit, we must identify the number of parties interested in attending the site visit. Therefore, if you have a particular interest in visiting the proposed project site and plan on participating in scoping of this project as identified in section 3 of the Scoping Document 1, you *must* first register with Mr. Stan Selmer at (907) 983–2202, no later than June 5, 1995. Mr. Selmer will serve as the principle site visit coordinator.

We will meet at Alaska Power's office at 5th and Spring Street in Skagway, Alaska at 7:00 a.m., and promptly leave for the upper project area near Goat Lake located about 8 miles away, via helicopter.[1] Those in attendance will then hike down Pitchfork Falls along the alignment of proposed project features. Around 1:00 p.m., the participants will be picked up around milepost 9 by a flag train on the White Pass and Yukon Route Railroad, and will travel northbound across White Pass to Frazer, Canada to give participants a scenic overview of the Klondike area around the proposed project. There will be a cost of approximately $64.00 for the train ride to Frazer, and tickets would have to be purchased in advance. Vehicles will be parked at Frazer to provide transportation back to Skagway along the Klondike Highway.[2] Arrival in Skagway is expected around 4:00 p.m.[3]

In the event inclement weather precludes the site visit on June 20, on alternate site visit will be held on Wednesday, June 21, 1995, with the same itinerary.

Any questions regarding this notice may be directed to Mr. Carl Keller, FERC Environmental Coordinator, Washington, DC (202) 219–2831, or Ms. Margaret Beilharz, FS Project Manager at (907) 586–8800, Juneau, Alaska.

Linwood A. Watson, Jr.,

Acting Secretary.

[FR Doc. 95–13063 Filed 5–25–95; 8:45 am]

BILLING CODE 6717–01–M

[1] Because of the remote steep topography, shrub thickets, and abundant surface water in the project area, those attending the site visit should be physically fit and must wear appropriate clothing and footgear. In addition, those shuttled by helicopter to the project site not on official agency business, may need to sign a waiver of liability.

[2] To enter Canada, proof of U.S. citizenship will be required. Therefore, all participants must provide one of the following: birth certificate, voters registration card, social security card, or U.S. passport.

[3] One alternate for returning to Skagway would be for participants to board an 11:00 a.m. southbound flag train around milepost 9 on the WP&YR RR. This train would arrive in Skagway around 12:00 noon and the trip would cost $25.00. Another alternate for returning to Skagway would be for participants to board a 5:30 p.m. southbound flag train around milepost 9 on the WP&YR RR. Its arrival in Skagway would be around 6:30 p.m. at a cost of $25.00. All tickets would have to be purchased in advance.

ENVIRONMENTAL PROTECTION AGENCY

[ER–FRL–4723–4]

Environmental Impact Statements and Regulations; Availability of EPA Comments

Availability of EPA comments prepared April 17, 1995 through April 21, 1995 pursuant to the Environmental Review Process (ERP), under Section 309 of the Clean Air Act and Section 102(2)(c) of the National Environmental Policy Act as amended. Requests for copies of EPA comments can be directed to the Office of Federal Activities at (202) 260–5076.

An explanation of the ratings assigned to draft environmental impact statements (EISs) was published in the **Federal Register** dated April 14, 1995 (72 FR 19047).

Draft EISs

ERP No. D–AFS–J61095–CO Rating EC2, Loveland Ski Area Master Development Plan, Implementation, Arapaho National Forest, Clear Creek Ranger District, Clear Creek County, CO.

Summary: EPA expressed environmental concerns regarding wetland impact analysis. EPA requested that the final document provide additional information on this issue.

ERP No. D–AFS–L65239–OR Rating LO, East Fork Deer Creek Long-Term Ecosystem Productivity Research Study, Implementation, Willamette National Forest, Blue River Ranger District, Lane County, OR.

Summary: EPA had no objection to the proposed action.

ERP No. D–BLM–J02030–WY Rating LO1, Texaco's Stagecoach Draw Unit Natural Gas Field Development Project, Implementation, Application for Permit to Drill, Right-of-Way Grant, Temporary Use-Permit and COE Section 404 Permit, Farson, Sweetwater County, WY.

Summary: EPA had no objection to the proposed action.

ERP No. D–BLM–K61135–AZ Rating EC2, Grand Canyon National Park General Management Plan, Implementation, Coconino and Mohave Counties, AZ.

Summary: EPA expressed environmental concerns regarding drinking water compliance, wastewater treatment, air quality and wetland. EPA requested addition information be included in the final document to address these issues.

ERP No. D–COE–D36072–VA Rating LO, Grundy Flood Damage Reduction/ Highway Upgrade Project, Implementation, Town of Grundy, Buchanan County, VA.

Summary: EPA had not identified any potential environmental impacts requiring substantive changes to the proposal. However, EPA requested additional information concerning cumulative impacts of the proposal.

ERP No. D–FTA–K40209–CA Rating EC2, Mid-Coast Corridor Mass Transit Improvement Project, Funding, San Diego County, CA.

Summary: EPA expressed environmental concerns about the local CO modeling, potential impacts to wetlands and runoff to surface waters impacts. EPA also suggested that the two best performing alternatives, the HOV and Light Rail Transit, should be examined together and discussed.

ERP No. D–IBR–L64044–OR Rating LO, Fish Passage Improvements, Savage Rapids Dam, Implementation, Grants Pass Irrigation District, Rogue River, Josephine and Jackson Counties, OR.

Summary: EPA had no objection to the proposed action.

ERP No. D–MMS–L02024–AK Rating EC2, Cook Inlet Planning Area, Alaska Outer Continental Shelf Oil and Gas Sale 149, Leasing Offering, AK.

Summary: EPA expressed environmental concerns that the proposed action does not provide a commitment to the stipulations and information to lessees (ITL's) and uncertainty about the effectiveness of mitigating spill risk. EPA requested additional information and clarification about the issues.

Final EISs

ERP No. F–BIA–J65220–SD, Rosebud and Cheyenne River Sioux Indian Reservations, Management of the Livestock Grazing and Prairie Dog Control, Funding, Todd and Mellette Counties, SD.

Summary: EPA had no objection to the proposed action at the Cheyenne River Sioux Reservations, it expressed environmental objections to the applicant preferred alternative for the Rosebud Reservation. EPA requests selection of the no action alternative at Rosebud until the Rosebud Sioux Tribe and BIA can develop a prairie management plan that regards both grazing need and biodiversity, with special emphasis on the Black Footed Ferrel.

ERP No. F–DOE–J08024–CO Flatiron-Erie 115-kV Electrical Transmission Line Replacement of Wood-Pole Structures, Construction, Operation and Right-of-Way Grant, City of Longmont, Larimer, Boulder and Weld Counties, CO.

Summary: EPA had no further comments or questions. WAPA had adequately addressed EPA's previous comments on the draft EIS.

ERP No. F–FHW–L40162–OR Mill Creek/West Sixth Street Bridge Replacement, Funding, City of The Dalles, Wasco County, OR.

Summary: EPA had no objection to the preferred alternative as described in the EIS. Review of the final EIS has been completed and the project found to be satisfactory.

ERP No. FS–AFS–K61103–CA Bear Mountain Ski Resort Expansion, (formerly known as Goldmine) New Information, Special Use Permit and Possible COE Section 404 Permit, San Bernardino National Forest, San Bernardino Co., CA.

Summary: EPA continued to express environmental objections to the proposed action due to the high level of development proposed and cumulative impact.

Dated: May 22, 1995.

William D. Dickerson,

Director, Office of Federal Activities.

[FR Doc. 95–12996 Filed 5–25–95; 8:45 am]

BILLING CODE 6560–50–U

[ER–FRL–4723–3]

Environmental Impact Statements; Notice of Availability

Responsible Agency: Office of Federal Activities, General Information (202) 260–5076 OR (202) 260–5075. Weekly receipt of Environmental Impact Statements Filed May 15, 1995 Through May 19, 1995 Pursuant to 40 CFR 1506.9.

EIS No. 950203, Draft EIS, SFW, CT, VT, MA, NH, Silvio O. Conte National Fish and Wildlife Refuge Act in the Connecticut River Watershed, Implementation, CT, VT, MA and NH, Due: July 31, 1995, Contact: Larry Bandolin (413) 863–0209.

EIS No. 950204, Draft EIS, FHW, PA, PA–26 Transportation Improvements, (College Avenue) between State College and Pleasant Gap, Funding, Appalachian Mountain, Centre County, PA, Due: July 13, 1995, Contact: Manuel A. Marks (717) 787–2222.

EIS No. 950205, Final EIS, COE, VA, Southeastern Public Service Authority of Virginia Regional Landfill Expansion Project, COE Section 404 Permit Issuance, Cities of Chesapeake, Norfolk, Portsmouth, Suffolk, and Virginia Beach, Isle of Wight and Southampton Counties, VA, Due: June 26, 1995, Contact: Pamela Painter (804) 441–7654.

EIS No. 950206, Draft EIS, AFS, ID, Fall Creek Post-Fire Project, Harvesting Fire-Killed and Damage Trees, Implementation, McCall Ranger District, Payette National Forest, Valley County, ID, Due: July 10, 1995, Contact: Cindy Tencick (208) 634–0400.

EIS No. 950207, Final EIS, AFS, CA, Oregon Creek Ecosystem Management Project, Implementation, Tahoe National Forest, Downieville Ranger District, Yuba and Sierra Counties, CA, Due: June 26, 1995, Contact: Jean Masquelier (916) 478–6253.

EIS No. 950208, Final EIS, AFS, OR, Santiam Pass Forest Health Project, Implementation, Willamette National Forest, McKenzie Ranger District, Linn County, OR, Due: June 26, 1995, Contact: John P. Allen (503) 822–3381.

EIS No. 950209, Final EIS, DOD, HI, Kauai Acoustic Thermometry of Ocean Climate (ATOC) Project and Marine Mammal Research Program (MMRP), Funding, Marine Manual Research Permit and COE Section 10 Permit Issuance, Kauai, HI, Due: June 26, 1995, Contact: Ralph W. Alewine (703) 696–2246.

Amended Notices

EIS No. 950125, Draft EIS, AFS, NV, CA, Heavenly Ski Resort Master Plan, Improvement, Expansion and Management, Lake Tahoe Basin Management Unit, Special-Use-Permit, Douglas County, NV and El Dorado and Alpine Counties, CA, Due: July 05, 1995, Contact: Virgil Anderson (916) 573–2600. Published FR 04–14–95—Review period extended.

Dated: May 22, 1995.

William D. Dickerson,

Director, Office of Federal Activities.

[FR Doc. 95–12997 Filed 5–25–95; 8:45 am]

BILLING CODE 6560–50–U

[OPP–00410; FRL–4956–5]

State FIFRA Issues Research and Evaluation Group (SFIREG) Working Committee on Water Quality & Pesticide Disposal; Open Meeting

AGENCY: Environmental Protection Agency (EPA).

ACTION: Notice.

SUMMARY: The State FIFRA Issues Research and Evaluation Group (SFIREG) Working Committee on Water Quality and Pesticide Disposal will hold a 2–day meeting, beginning on Monday, June 5, 1995, and ending on Tuesday, June 6, 1995. This notice announces the location and times for the meeting and sets forth tentative agenda topics. The meeting is open to the public.

DATES: The SFIREG Working Committee on Water Quality and Pesticide Disposal will meet on Monday, June 5, 1995, from 8:30 a.m. to 5:00 p.m., and Tuesday, June 6, 1995, from 8:30 a.m. to 12:00 p.m.

ADDRESSES: The meeting will be held at: The DoubleTree Hotel, National Airport - Crystal City, 300 Army-Navy Drive, Arlington, VA, 22202, 703–892–4100.

FOR FURTHER INFORMATION CONTACT: By mail: Shirley M. Howard, Office of Pesticide Programs (7506C), Environmental Protection Agency, 401 M St., SW., Washington, DC 20460. Office location and telephone number: Rm. 1101, Crystal Mall No. 2, 1921 Jefferson Davis Highway, Arlington, VA 22202, 703–305–5306.

SUPPLEMENTARY INFORMATION: The tentative agenda of the SFIREG Working Committee on Water Quality and Pesticide Disposal includes the following:

1. Reports from the SFIREG Working Committee members on State Water Quality and Pesticide Disposal projects.

2. Discussion on the guidelines for prospective groundwater studies.

3. Update on the State Management Plan (SMP) rule.

4. Status of the groundwater SMP program, review and teleconferences.

5. Discussion of the United States Geological Survey (U.S.G.S.) groundwater and surface water monitoring for pesticides and metabolites.

6. Update on Amber registration.

7. Discussion of cross contamination of bulk pesticides.

8. Status of the part 165 regulations.

9. Other topics as appropriate.

List of Subjects

Environmental protection.

Dated: May 18, 1995.

William L. Jordan,

Acting Director, Field Operations Division, Office of Pesticide Programs.

[FR Doc. 95–13138 Filed 5–25–95; 8:45 am]

BILLING CODE 6560–50–F

FEDERAL DEPOSIT INSURANCE CORPORATION

Statement of Policy Regarding Treatment of Collateralized Letters of Credit After Appointment of the Federal Deposit Insurance Corporation as Conservator or Receiver

AGENCY: Federal Deposit Insurance Corporation (FDIC).

ACTION: Statement of policy.

SUMMARY: The FDIC has adopted a statement of policy that sets forth how the FDIC, as conservator or receiver for an insured depository institution, proposes to treat letters of credit backed by a pledge of collateral by the insured depository institution. Only those collateralized letters of credit (CLOCs) that were initially issued prior to the enactment of the Financial Institutions Reform, Recovery, and Enforcement Act of 1989 (FIRREA) are covered by this policy.

EFFECTIVE DATE: May 19, 1995.

FOR FURTHER INFORMATION CONTACT:

Sharon Powers Sivertsen, Assistant General Counsel (202–736–0112), or Michael H. Krimminger, Senior Counsel (202–736–0336), Legal Division, Federal Deposit Insurance Corporation, 550 17th Street, NW., Washington, DC 20429.

Statement of Policy Regarding Treatment of Collateralized Letters of Credit After Appointment of the Federal Deposit Insurance Corporation as Conservator or Receiver

This Statement of Policy sets forth the treatment that the Federal Deposit Insurance Corporation (FDIC) as the conservator or receiver of an insured depository institution will give certain collateralized letters of credit issued by insured depository institutions prior to August 9, 1989.

Background

On August 9, 1989, the Financial Institutions Reform, Recovery, and Enforcement Act of 1989 (FIRREA) was signed into law. This statute amended the Federal Deposit Insurance Act (FDI Act) to clarify the FDIC's rights as conservator or receiver to repudiate contracts and to limit claims for damages upon repudiation to those actual, direct compensatory damages determined as of the date of the appointment of the conservator or receiver. 12 U.S.C. 1821(e)(3)(A). With regard to secured contracts, the FDI Act provides that the repudiation provisions contained in 12 U.S.C. 1821(e) are not to be construed as permitting the avoidance of any legally enforceable or perfected security interest in any assets of the institution, except where such interest is taken in contemplation of the institution's insolvency or with the intent to hinder, delay, or defraud the institution or the institution's creditors. 12 U.S.C. 1821(e)(11).

Generally, contingent obligations do not give rise to provable claims against a receivership or conservatorship, and any claims based upon such obligations have no provable damages because the damages are not fixed and certain as of the date of the appointment of the receiver or conservator. Accordingly, no provable claims in a receivership or conservatorship can be based on contingent obligations unless the default by the account party conferring a right to draw under the obligations occurred prior to the appointment of the receiver or conservator.

Reading section 11(e) of the FDI Act, 12 U.S.C. 1821(e), as a whole, it is clear that even secured contracts may be repudiated; that damages are limited to the extent set forth in the statute; and that legally enforceable or perfected security agreements will be honored to the extent of such damages but no further or otherwise. In other words, if there is a repudiation, the collateral securing the contract may be liquidated and the proceeds paid to or retained by the creditor up to the damages allowed by the statute. The remaining collateral or proceeds will be remitted or returned to the conservator or receiver as property of the institution or its estate, or to a bona fide junior lienholder to the extent applicable.

Statement of Policy

The FDIC has considered a number of relevant policy factors with respect to the treatment of certain collateralized letters of credit after its appointment as conservator or receiver of insured depository institutions. Specifically, it has considered its legal rights and powers under FIRREA; the assurances provided by the Federal Home Loan Bank Board prior to the enactment of FIRREA; the assurances provided by the Resolution Trust Corporation in its September 15, 1990 statement of policy on the treatment of collateralized letters of credit; market reliance on these assurances; the need for market certainty and stability; and the potential long-term cost to the FDIC of the repudiation of certain collateralized letters of credit. Based on its consideration and balancing of such factors, the FDIC has determined to adopt and implement the following Policy on the treatment of certain collateralized letters of credit after its appointment as conservator or receiver of insured depository institutions. This Policy is substantively the same as the RTC's September 25, 1990 policy statement on collateralized letters of credit and conforms to the RTC and FDIC policy statements on collateralized put obligations. As a consequence, adoption of the proposed policy statement will promote market certainty and stability upon the transition of receivership responsibilities from the RTC to the FDIC on July 1, 1995. 12 U.S.C. 1441a(b)(3)(A)(ii).

This Policy will apply only to collateralized letters of credit utilized in capital markets financing transactions originally issued by insured depository institutions prior to August 9, 1989, and any subsequent renewal, replacement or extension of such letters of credit. In addition, this Policy will apply only in such transactions where the underlying security interest is in collateral owned and pledged by the insured depository institution to secure its obligations and the security interest is both perfected and legally enforceable under applicable law. These financing transactions include transactions involving publicly-offered obligations rated by one or more nationally-recognized credit rating agencies and transactions involving non-rated privately placed obligations structured in a manner substantially similar to such rated obligations. The

policy does not apply to trade letters of credit or letters of credit issued for any other purpose.

After its appointment as conservator or receiver of any insured depository institution, the FDIC may either (1) continue any collateralized letters of credit as enforceable under the terms of the contract during the pendency of the conservatorship or receivership or (2) call, redeem or prepay any collateralized letters of credit by repudiation or disaffirmance.

If the FDIC as conservator or receiver exercises its right to call, redeem or prepay any collateralized letters of credit by repudiation or disaffirmance, it may do so either directly by cash payment in exchange for the release of the collateral or by repudiation of the contract followed by liquidation of the collateral by a trustee or other secured party. If the FDIC in its capacity as conservator or receiver accelerates the collateralized letters of credit by repudiation or disaffirmance, payment will be made to the extent of available collateral up to an amount equal to the outstanding principal amount or accreted value of the secured obligations, together with interest at the contract rate up to and including the date of payment and expenses of liquidation, if provided in the contract. If any collateral or proceeds remain after payment of such amounts, such collateral or proceeds then must be remitted or returned to the conservator or receiver as property of the institution or its estate, or to a bona fide junior lienholder to the extent applicable. If, however, the collateral securing the contract is insufficient to pay in full the amounts owing under the contract, the holder will receive a receivership certificate for any balance remaining due under the contract.

The FDIC shall have a reasonable time, generally no more than 180 days from the date of the appointment of the FDIC as conservator or receiver, to elect whether to disaffirm, repudiate, or accelerate a collateralized letter of credit. In the case of institutions for which the FDIC already has been so appointed, the period in which to make such an election shall begin to run as of the date of the adoption of this Policy and continue for 180 days.

This Policy Statement does not change or amend the FDIC's longstanding position that standby letters of credit are contingent obligations. Based on its consideration and balancing of the policy issues presented, however, the FDIC has adopted this statement of policy for collateralized letters of credit initially issued prior to August 9, 1989, and any subsequent renewal, replacement or extension of such letters of credit. It is understood that the persons involved in such secured transactions with insured depository institutions may reasonably rely upon this Policy Statement.

Dated at Washington, D.C., this 18th day of May, 1995.

By order of the Board of Directors.
Federal Deposit Insurance Corporation.

Robert E. Feldman,

Acting Executive Secretary.

[FR Doc. 95–12992 Filed 5–25–95; 8:45 am]

BILLING CODE 6714–01–M

FEDERAL RESERVE SYSTEM

Union Planters Corporation, et al.; Formations of; Acquisitions by; and Mergers of Bank Holding Companies

The companies listed in this notice have applied for the Board's approval under section 3 of the Bank Holding Company Act (12 U.S.C. 1842) and § 225.14 of the Board's Regulation Y (12 CFR 225.14) to become a bank holding company or to acquire a bank or bank holding company. The factors that are considered in acting on the applications are set forth in section 3(c) of the Act (12 U.S.C. 1842(c)).

Each application is available for immediate inspection at the Federal Reserve Bank indicated. Once the application has been accepted for processing, it will also be available for inspection at the offices of the Board of Governors. Interested persons may express their views in writing to the Reserve Bank or to the offices of the Board of Governors. Any comment on an application that requests a hearing must include a statement of why a written presentation would not suffice in lieu of a hearing, identifying specifically any questions of fact that are in dispute and summarizing the evidence that would be presented at a hearing.

Unless otherwise noted, comments regarding each of these applications must be received not later than June 19, 1995.

A. Federal Reserve Bank of St. Louis (Randall C. Sumner, Vice President) 411 Locust Street, St. Louis, Missouri 63166:

1. Union Planters Corporation, Memphis, Tennessee; to acquire 100 percent of the voting shares of Union Planters Bank of Central Misissippi, Jackson, Mississippi, a *de novo* bank, and to acquire 100 percent of the voting shares of Union Planters Bank of Southern Mississippi, Hattiesburg, Mississippi, a *de novo* bank.

B. Federal Reserve Bank of Dallas (Genie D. Short, Vice President) 2200 North Pearl Street, Dallas, Texas 75201-2272:

1. Andrews Bancshares, Inc., Andrews, Texas; to become a bank holding company by acquiring 100 percent of the voting shares of Andrews Delaware Financial Corporation, Dover, Delaware, and thereby indirectly acquire National Bank of Andrews, Andrews, Texas.

In connection with this application, Andrews Delaware Financial Corporation, Dover, Delaware; has also applied to become a bank holding company by acquiring 100 percent of the voting shares of National Bank of Andrews, Andrews, Texas.

Board of Governors of the Federal Reserve System, May 22, 1995.

Jennifer J. Johnson,

Deputy Secretary of the Board.

[FR Doc. 95-12976 Filed 05-25-95; 8:45 am]

BILLING CODE 6210-01-F

Farmers & Merchants Bank Employee Stock Ownership Plan; Change in Bank Control Notices; Acquisitions of Shares of Banks or Bank Holding Companies; Correction

This notice corrects a notice (FR Doc. 95–11754) published on page 25723 of the issue for Friday, May 12, 1995.

Under the Federal Reserve Bank of Atlanta heading, the entry for Farmers & Merchants Bank Employee Stock Ownership Plan, is revised to read as follows:

1. Farmers & Merchants Bank Employee Stock Ownership Plan, Forest, Mississippi; to acquire Bankers Capital Corporation, Forest, Mississippi, and thereby engage in making, acquiring or servicing loans or other extensions of credit, pursuant to § 225.25(b)(1) of the Board's Regulation Y. The proposed activity will be conducted throughout the United States.

Comments on this application must be received by May 26, 1995.

Board of Governors of the Federal Reserve System, May 22, 1995.

Jennifer J. Johnson,

Deputy Secretary of the Board.

[FR Doc. 95–11754 Filed 5–11–95; 8:45 am]

BILLING CODE 6210–01–F

Michael J. Corliss; Change in Bank Control Notice

Acquisition of Shares of Banks or Bank Holding Companies

The notificant listed below has applied under the Change in Bank Control Act (12 U.S.C. 1817(j)) and § 225.41 of the Board's Regulation Y (12

CFR 225.41) to acquire a bank or bank holding company. The factors that are considered in acting on notices are set forth in paragraph 7 of the Act (12 U.S.C. 1817(j)(7)).

The notice is available for immediate inspection at the Federal Reserve Bank indicated. Once the notice has been accepted for processing, it will also be available for inspection at the offices of the Board of Governors. Interested persons may express their views in writing to the Reserve Bank indicated for the notice or to the offices of the Board of Governors. Comments must be received not later than June 9, 1995.

A. Federal Reserve Bank of San Francisco (Kenneth R. Binning, Director, Bank Holding Company) 101 Market Street, San Francisco, California 94105:

1. Michael J. Corliss (through the Corliss Valley Bancorporation Trust), Sumner, Washington; to retain 11.75 percent, and acquire an additional 2.35 percent, for a total of 14.10 percent of the voting shares of Valley Bancorporation, Sumner, Washington.

Board of Governors of the Federal Reserve System, May 22, 1995.

Jennifer J. Johnson,

Deputy Secretary of the Board.

[FR Doc. 95–12973 Filed 5–25–95; 8:45 am]

BILLING CODE 6210–01–F

The Bank of New York Company, Inc.; Acquisition of Company Engaged in Permissible Nonbanking Activities

The organization listed in this notice has applied under § 225.23(a)(2) or (f) of the Board's Regulation Y (12 CFR 225.23(a)(2) or (f)) for the Board's approval under section 4(c)(8) of the Bank Holding Company Act (12 U.S.C. 1843(c)(8)) and § 225.21(a) of Regulation Y (12 CFR 225.21(a)) to acquire or control voting securities or assets of a company engaged in a nonbanking activity that is listed in § 225.25 of Regulation Y as closely related to banking and permissible for bank holding companies. Unless otherwise noted, such activities will be conducted throughout the United States.

The application is available for immediate inspection at the Federal Reserve Bank indicated. Once the application has been accepted for processing, it will also be available for inspection at the offices of the Board of Governors. Interested persons may express their views in writing on the question whether consummation of the proposal can ''reasonably be expected to produce benefits to the public, such as greater convenience, increased competition, or gains in efficiency, that outweigh possible adverse effects, such as undue concentration of resources, decreased or unfair competition, conflicts of interests, or unsound banking practices.'' Any request for a hearing on this question must be accompanied by a statement of the reasons a written presentation would not suffice in lieu of a hearing, identifying specifically any questions of fact that are in dispute, summarizing the evidence that would be presented at a hearing, and indicating how the party commenting would be aggrieved by approval of the proposal.

Comments regarding the application must be received at the Reserve Bank indicated or the offices of the Board of Governors not later than June 9, 1995.

A. Federal Reserve Bank of New York (William L. Rutledge, Senior Vice President) 33 Liberty Street, New York, New York 10045:

1. The Bank of New York Company, Inc., New York, New York; to acquire Continental Trust Company, Chicago, Illinois, and thereby engage in trust activities, pursuant to § 225.25 (b)(3) of the Board's Regulation Y.

Board of Governors of the Federal Reserve System, May 22, 1995.

Jennifer J. Johnson,

Deputy Secretary of the Board.

[FR Doc. 95–12972 Filed 5–25–95; 8:45 am]

BILLING CODE 6210–01–F

MBNA Corporation; Notice of Application to Engage de novo in Permissible Nonbanking Activities

The company listed in this notice has filed an application under § 225.23(a)(1) of the Board's Regulation Y (12 CFR 225.23(a)(1)) for the Board's approval under section 4(c)(8) of the Bank Holding Company Act (12 U.S.C. 1843(c)(8)) and § 225.21(a) of Regulation Y (12 CFR 225.21(a)) to commence or to engage *de novo*, either directly or through a subsidiary, in a nonbanking activity that is listed in § 225.25 of Regulation Y as closely related to banking and permissible for bank holding companies. Unless otherwise noted, such activities will be conducted throughout the United States.

The application is available for immediate inspection at the Federal Reserve Bank indicated. Once the application has been accepted for processing, it will also be available for inspection at the offices of the Board of Governors. Interested persons may express their views in writing on the question whether consummation of the proposal can ''reasonably be expected to produce benefits to the public, such as greater convenience, increased competition, or gains in efficiency, that outweigh possible adverse effects, such as undue concentration of resources, decreased or unfair competition, conflicts of interests, or unsound banking practices.'' Any request for a hearing on this question must be accompanied by a statement of the reasons a written presentation would not suffice in lieu of a hearing, identifying specifically any questions of fact that are in dispute, summarizing the evidence that would be presented at a hearing, and indicating how the party commenting would be aggrieved by approval of the proposal.

Comments regarding the application must be received at the Reserve Bank indicated or the offices of the Board of Governors not later than June 9, 1995.

A. Federal Reserve Bank of Philadelphia (Michael E. Collins, Senior Vice President) 100 North 6th Street, Philadelphia, Pennsylvania 19105:

1. MBNA Corporation, Newark, Delaware; to engage *de novo*, through its newly formed subsidiary MBNA Community Development Corporation, Newark, Delaware, in community development activities, pursuant to § 225.25(b)(6) of the Board's Regulation Y.

Board of Governors of the Federal Reserve System, May 22, 1995.

Jennifer J. Johnson,

Deputy Secretary of the Board.

[FR Doc. 95–12975 Filed 5–25–95; 8:45 am]

BILLING CODE 6210-01-F

DEPARTMENT OF HEALTH AND HUMAN SERVICES

Centers for Disease Control and Prevention

[Announcement 540]

Development of State Health Promotion and Chronic Disease Prevention Databases/Clearinghouses

Introduction

The Centers for Disease Control and Prevention (CDC) announces the availability of fiscal year (FY) 1995 funds for a cooperative agreement program for the development of State health promotion and chronic disease prevention databases/clearinghouses that are compatible with Chronic Disease Prevention File (CDP) and the Combined Health Information Database (CHID). CDP File and CHID link health information and education resources into a national network of information on programs, interventions, and methods, and act as a mechanism for collecting, sharing, and distributing information, bibliographies, literature,

and health promotion and chronic disease prevention information to professionals responsible for planning, developing, conducting, and evaluating health promotion and chronic disease prevention programs.

The Public Health Service (PHS) is committed to achieving the health promotion and disease prevention objectives of ''Healthy People 2000,'' a PHS-led national activity to reduce morbidity and mortality and improve the quality of life. This announcement is related to the priority areas of Cancer, Clinical Preventive Services, Diabetes and Chronic Disabling Conditions, Educational and Community-Based Programs, HIV Infection, Family Planning, Heart Disease and Stroke, Physical Activity and Fitness, Nutrition, Tobacco, Maternal and Infant Health, Sexually Transmitted Diseases, and Surveillance and Data Systems. (For ordering a copy of ''Healthy People 2000,'' see the section Where to Obtain Additional Information.)

Authority

This program is authorized under section 317(k)(2) [42 U.S.C. 247b(k)(2)] of the Public Health Service Act, as amended.

Smoke-Free Workplace

The Public Health Service strongly encourages all grant recipients to provide a smoke-free workplace and promote the non-use of all tobacco products, and Public Law 103–227, the Pro-Children Act of 1994, prohibits smoking in certain facilities that receive Federal funds in which education, library, day care, health care, and early childhood development services are provided to children.

Eligible Applicants

Eligible applicants are the official public health agencies of States or their bona fide agents. This includes the District of Columbia, American Samoa, the Commonwealth of Puerto Rico, the Virgin Islands, the Federated States of Micronesia, Guam, the Northern Mariana Islands, the Republic of the Marshall Islands, the Republic of Palau, and federally recognized Indian tribal governments.

Funding is limited to one three-year project period to provide start-up costs for establishing a State database. Therefore, Colorado, Minnesota, and Missouri are not eligible applicants because they were funded September 1, 1991, for a three-year project period, under Program Announcement Number: 940, entitled ''Assistance Program for Chronic Disease Prevention and Control'' for the activities described in this program announcement. In addition, California, Florida, and Michigan are not eligible participants because they were funded September 30, 1993, for a three-year project period, under Program Announcement Number: 344, entitled ''Development of State Health Promotion and Chronic Disease Prevention Databases/Clearinghouses.''

Availability of Funds

Approximately $90,000 is available in FY 1995 to fund approximately three awards. It is expected that the average award will be $30,000. It is expected that the awards will begin on or about September 30, 1995, and will be made for a 12-month budget period within a project period of up to three years. Funding estimates may vary and are subject to change.

Continuation awards within the project period will be made on the basis of satisfactory progress and the availability of funds.

Purpose

This cooperative agreement will provide States with start-up funds and guidance to establish bibliographic databases that are compatible with CDP File and CHID. The databases may be used to support new or existing health information clearinghouses, thereby increasing health professionals' access to State health promotion and chronic disease prevention information.

Program Requirements

In conducting activities to achieve the purpose of this program, the recipient will be responsible for the activities under A., and CDC will be responsible for the activities under B.

A. Recipient Activities

1. Establish and maintain a bibliographic database compatible with CDP File and CHID.
2. Establish a database advisory committee.
3. Design and carry out a systematic needs assessment to determine specific needs, current resources, and communication networks of State and local health professionals.
4. Identify, acquire, track, promote, and provide access to State and local health promotion and chronic disease prevention program information and materials.
5. Design and implement a quality assurance plan to maintain accurate data entry, descriptive abstracts, and consistent indexing of database records.
6. Revise, update, and delete items in the database.
7. Develop a plan and conduct an evaluation to monitor program activity and use of the database.
8. Develop a plan for gaining administrative support, continuing activities beyond the project period, and for institutionalizing the database into the agency organizational structure.

B. CDC Activities

1. Collaborate in the design of the database to ensure compatibility with CDP File and CHID.
2. Collaborate in developing a needs assessment and information collection instruments.
3. Collaborate in developing plans for quality assurance, tracking, evaluation, and institutionalization.
4. Collaborate in training project staff.
5. Assist in promoting the State and national information systems.
6. Coordinate with other Federal agencies, States, and organizations to ensure a coordinated, cooperative effort to build a comprehensive information sharing system.

Evaluation Criteria

Applications will be reviewed and evaluated according to the following criteria:

A. Background and Need: The extent to which a database currently exists, the degree of need and administrative commitment to the project. (15 Points)

B. Goals and Objectives: The extent to which the stated goals and objectives are specific, measurable, time-framed and realistic; are derived from identified needs; and describe process, impact, and outcome objectives. (15 Points)

C. Database Development Plan: The appropriateness of the methodologies for (1) establishing a database advisory committee; (2) designing, implementing, and analyzing a needs assessment; (3) identifying, collecting, selecting, and tracking information resources; (4) cataloging, abstracting, and indexing records; (5) promoting and providing access to users; and (6) revising, updating, and deleting items. (20 Points)

D. Institutionalization: The extent to which the applicant demonstrates the capacity to gain administrative support for the project, continue activities beyond the project period, and institutionalize the database into the agency organizational structure. (15 Points)

E. Management: The extent to which the applicant demonstrates the capacity to provide adequate and appropriate staff and equipment resources. (15 Points)

F. Quality Assurance: The extent to which the quality assurance plan is adequate and appropriate. (10 Points)

G. Evaluation: The extent to which the evaluation plan determines the effectiveness of the database. (10 Points)

H. Budget: The extent to which the budget is reasonable and consistent with the intended use of the program funds. (Not Weighted)

Executive Order 12372 Review

Applications are subject to Intergovernmental Review of Federal Programs as governed by Executive Order (E.O.) 12372. E.O. 12372 sets up a system for State and local government review of proposed Federal assistance applications. Applicants should contact their State Single Point of Contact (SPOC) as early as possible to alert them to the prospective applications and receive any necessary instructions on the State process. For proposed projects serving more than one State, the applicant is advised to contact the SPOC of each affected State. A current list of SPOCs is included in the application kit. If SPOCs have any State process recommendations on applications submitted to CDC, they should send them to Clara M. Jenkins, Grants Management Officer, Grants Management Branch, Procurement and Grants Office, Centers for Disease Control and Prevention (CDC), 255 East Paces Ferry Road, NE., Room 314, Mailstop E–18, Atlanta, GA 30305, no later than 60 days after the application deadline date. The Program Announcement Number and Program Title should be referenced on the document. The granting agency does not guarantee to ''accommodate or explain'' State process recommendations it receives after that date. Indian tribes are strongly encouraged to request tribal government review of the proposed application. If tribal governments have any tribal process recommendations on applications submitted to CDC, they should forward them to Clara M. Jenkins, Grants Management Officer, Grants Management Branch, Procurement and Grants Office, Centers for Disease Control and Prevention (CDC), 255 East Paces Ferry Road, NE., Room 314, Mailstop E–18, Atlanta, GA 30305. This should be done no later than 60 days after the application deadline date. The granting agency does not guarantee to ''accommodate or explain'' for tribal process recommendations it receives after that date.

Public Health System Reporting Requirements

This program is not subject to the Public Health System Reporting Requirements.

Catalog of Federal Domestic Assistance Number

The Catalog of Federal Domestic Assistance Number is 93.283.

Other Requirements

Paperwork Reduction Act

Projects that involve the collection of information from 10 or more individuals and funded by the cooperative agreement will be subject to review by the Office of Management and Budget (OMB) under the Paperwork Reduction Act.

Application Submission and Deadline

The original and two copies of the application PHS Form 5161–1 (OMB Number 0937–0189) must be submitted to Clara M. Jenkins, Grants Management Officer, Grants Management Branch, Procurement and Grants Office, Centers for Disease Control and Prevention (CDC), 255 East Paces Ferry Road, NE., Room 314, Mailstop E–18, Atlanta, GA 30305 on or before July 14, 1995.

1. Deadline: Applications shall be considered as meeting the deadline if they are either:

(a) Received on or before the deadline date; or

(b) Sent on or before the deadline date and received in time for submission to the objective review group. (Applicants must request a legibly dated U.S. Postal Service postmark or obtain a legibly dated receipt from a commercial carrier or U.S. Postal Service. Private metered postmarks shall not be acceptable as proof of timely mailing.)

2. Late Applications: Applications that do not meet the criteria in 1.(a) or 1.(b) above are considered late applications. Late applications will not be considered in the current competition and will be returned to the applicant.

Where to Obtain Additional Information

A complete program description and information package on application procedures, an application package, and business management technical assistance may be obtained from Nealean K. Austin, Grants Management Specialist, Grants Management Branch, Procurement and Grants Office, Centers for Disease Control and Prevention (CDC), 255 East Paces Ferry Road, NE., Room 314, Atlanta, GA 30305, telephone (404) 842–6512.

Programmatic technical assistance may be obtained from Kathryn Sunnarborg or William Thomas, Technical Information Specialist, Technical Information Services Branch, National Center for Chronic Disease Prevention and Health Promotion, Centers for Disease Control and Prevention (CDC), Mailstop K–13, 4770 Buford Highway, NE., Atlanta, GA 30341–3724, telephone (404) 488–5080.

Please refer to Announcement Number 540 when requesting information and submitting an application.

Potential applicants may obtain a copy of ''Healthy People 2000'' (Full Report, Stock No. 017–001–00474–0) or ''Healthy People 2000'' (Summary Report, Stock No. 017–001–00473–1) referenced in the Introduction through the Superintendent of Documents, Government Printing Office, Washington, DC 20402–9325, telephone (202) 512–1800.

Dated: May 22, 1995.

Joseph R. Carter,

Acting Associate Director for Management and Operations, Centers for Disease Control and And Prevention (CDC).

[FR Doc. 95–12954 Filed 5–25–95; 8:45 am]

BILLING CODE 4163–18–P

Food and Drug Administration

[Docket Nos. 76N–0048 and 95D–0094]

Compliance Policy Guides (CPG's); Revocation

AGENCY: Food and Drug Administration, HHS.

ACTION: Notice.

SUMMARY: The Food and Drug Administration (FDA) is announcing the revocation of six CPG's because they contain outdated regulatory guidance. This action is being taken to ensure that FDA's CPG's reflect current FDA policy.

EFFECTIVE DATE: May 26, 1995.

FOR FURTHER INFORMATION CONTACT: Ronald C. Varsaci, Center for Food Safety and Applied Nutrition (HFS–22), Food and Drug Administration, 200 C St. SW., Washington, DC 20204, 202–205–4251.

SUPPLEMENTARY INFORMATION: FDA is revoking the following six CPG's because they contain outdated regulatory guidance:

(1) CPG 7101.02—''Caffeine, Ingredient in Carbonated Beverages''

(2) CPG 7105.06—''Orgeat or 'Orzata' Sirup, Definition and Labeling''

(3) CPG 7105.08—''Sirup-Labeling—Use of Descriptive Statements''

(4) CPG 7105.10—''Candy Pills—Representation as Drugs''

(5) CPG 7128.01—''Bithionol in Cosmetics''

(6) CPG 7108.19—''Polychlorinated Biphenyls (PCB's) in Certain Freshwater Fish''

Dated: May 15, 1995.

Gary J. Dykstra,

Acting Associate Commissioner for Regulatory Affairs.

[FR Doc. 95–13034 Filed 5–25–95; 8:45 am]

BILLING CODE 4160–01–F

[Docket No. 95E–0055]

Determination of Regulatory Review Period for Purposes of Patent Extension; FRAGMIN®

AGENCY: Food and Drug Administration, HHS.

ACTION: Notice.

SUMMARY: The Food and Drug Administration (FDA) has determined the regulatory review period for FRAGMIN® and is publishing this notice of that determination as required by law. FDA has made the determination because of the submission of an application to the Commissioner of Patents and Trademarks, Department of Commerce, for the extension of a patent which claims that human drug product.

ADDRESSES: Written comments and petitions should be directed to the Dockets Management Branch (HFA–305), Food and Drug Administration, rm. 1–23, 12420 Parklawn Dr., Rockville, MD 20857.

FOR FURTHER INFORMATION CONTACT: Brian J. Malkin, Office of Health Affairs (HFY–20), Food and Drug Administration, 5600 Fishers Lane, Rockville, MD 20857, 301–443–1382.

SUPPLEMENTARY INFORMATION: The Drug Price Competition and Patent Term Restoration Act of 1984 (Pub. L. 98–417) and the Generic Animal Drug and Patent Term Restoration Act (Pub. L. 100–670) generally provide that a patent may be extended for a period of up to 5 years so long as the patented item (human drug product, animal drug product, medical device, food additive, or color additive) was subject to regulatory review by FDA before the item was marketed. Under these acts, a product's regulatory review period forms the basis for determining the amount of extension an applicant may receive.

A regulatory review period consists of two periods of time: A testing phase and an approval phase. For human drug products, the testing phase begins when the exemption to permit the clinical investigations of the drug becomes effective and runs until the approval phase begins. The approval phase starts with the initial submission of an application to market the human drug product and continues until FDA grants permission to market the drug product. Although only a portion of a regulatory review period may count toward the actual amount of extension that the Commissioner of Patents and Trademarks may award (for example, half the testing phase must be subtracted as well as any time that may have occurred before the patent was issued), FDA's determination of the length of a regulatory review period for a human drug product will include all of the testing phase and approval phase as specified in 35 U.S.C. 156(g)(1)(B).

FDA recently approved for marketing the human drug product FRAGMIN® (dalteparin sodium). FRAGMIN® is indicated for prophylaxis against deep vein thrombosis, which may lead to pulmonary embolism, in patients undergoing abdominal surgery who are at risk for thromboembolic complications. Subsequent to this approval, the Patent and Trademark Office received a patent term restoration application for FRAGMIN® (U.S. Patent No. 4,303,651) from Pharmacia Aktiebolag, and the Patent and Trademark Office requested FDA's assistance in determining this patent's eligibility for patent term restoration. In a letter dated March 23, 1995, FDA advised the Patent and Trademark Office that this human drug product had undergone a regulatory review period and that the approval of FRAGMIN® represented the first permitted commercial marketing or use of the product. Shortly thereafter, the Patent and Trademark Office requested that FDA determine the products's regulatory review period.

FDA has determined that the applicable regulatory review period for FRAGMIN® is 3,555 days. Of this time, 2,832 days occurred during the testing phase of the regulatory review period, while 723 days occurred during the approval phase. These periods of time were derived from the following dates:

1. *The date an exemption under section 505(i) of the Federal Food, Drug, and Cosmetic Act (21 U.S.C. 355(i)) became effective*: March 31, 1985. The applicant did not state an investigational new drug application (IND) effective date, stating that foreign studies were used in lieu of an IND. However, FDA records indicate that certain studies material to the approval of the product were conducted under IND 25,924. Therefore, the IND effective date was March 31, 1985, which was 30 days after FDA receipt of IND 25,924.

2. *The date the application was initially submitted with respect to the human drug product under section 505(b) of the Federal Food, Drug, and Cosmetic Act*: December 30, 1992. The applicant claims February 28, 1993, as the date the new drug application (NDA) for FRAGMIN® (NDA 20–287) was initially submitted, whereas it is actually the filing date. FDA records indicate that NDA 20–287 was refused to file on September 25, 1992. The correct resubmission date for NDA 20–287 is December 30, 1992, which was the date the resubmission was actually received by the agency. Therefore, the NDA initial submission date for NDA 20–287 is December 30, 1992, the same as the resubmission date.

3. *The date the application was approved*: December 22, 1994. FDA has verified the applicant's claim that NDA 20–287 was approved on December 22, 1994.

This determination of the regulatory review period establishes the maximum potential length of a patent extension. However, the U.S. Patent and Trademark Office applies several statutory limitations in its calculations of the actual period for patent extension. In its application for patent extension, this applicant seeks 661 days of patent term extension.

Anyone with knowledge that any of the dates as published is incorrect may on or before July 25, 1995, submit to the Dockets Management Branch (address above) written comments and ask for a redetermination. Furthermore, any interested person may petition FDA, on or before November 22, 1995, for a determination regarding whether the applicant for extension acted with due diligence during the regulatory review period. To meet its burden, the petition must contain sufficient facts to merit an FDA investigation. (See H. Rept. 857, part 1, 98th Cong., 2d sess., pp. 41–42, 1984.) Petitions should be in the format specified in 21 CFR 10.30.

Comments and petitions should be submitted to the Dockets Management Branch (address above) in three copies (except that individuals may submit single copies) and identified with the docket number found in brackets in the heading of this document. Comments and petitions may be seen in the Dockets Management Branch between 9 a.m. and 4 p.m., Monday through Friday.

Dated: May 15, 1995

Stuart L. Nightingale,

Associate Commissioner for Health Afairs.

[FR Doc. 95–13032 Filed 5–25–95; 8:45 am]

BILLING CODE 4160–01–F

[Docket No. 95E–0046]

Determination of Regulatory Review Period for Purposes of Patent Extension; Neurolite®

AGENCY: Food and Drug Administration, HHS.

ACTION: Notice.

SUMMARY: The Food and Drug Administration (FDA) has determined the regulatory review period for Neurolite® and is publishing this notice of that determination as required by law. FDA has made the determination because of the submission of an application to the Commissioner of Patents and Trademarks, Department of Commerce, for the extension of a patent which claims that human drug product.

ADDRESSES: Written comments and petitions should be directed to the Dockets Management Branch (HFA–305), Food and Drug Administration, rm. 1–23, 12420 Parklawn Dr., Rockville, MD 20857.

FOR FURTHER INFORMATION CONTACT: Brian J. Malkin, Office of Health Affairs (HFY–20), Food and Drug Administration, 5600 Fishers Lane, Rockville, MD 20857, 301–443–1382.

SUPPLEMENTARY INFORMATION: The Drug Price Competition and Patent Term Restoration Act of 1984 (Pub. L. 98–417) and the Generic Animal Drug and Patent Term Restoration Act (Pub. L. 100–670) generally provide that a patent may be extended for a period of up to 5 years so long as the patented item (human drug product, animal drug product, medical device, food additive, or color additive) was subject to regulatory review by FDA before the item was marketed. Under these acts, a product's regulatory review period forms the basis for determining the amount of extension an applicant may receive.

A regulatory review period consists of two periods of time: A testing phase and an approval phase. For human drug products, the testing phase begins when the exemption to permit the clinical investigations of the drug becomes effective and runs until the approval phase begins. The approval phase starts with the initial submission of an application to market the human drug product and continues until FDA grants permission to market the drug product. Although only a portion of a regulatory review period may count toward the actual amount of extension that the Commissioner of Patents and Trademarks may award (for example, half the testing phase must be subtracted as well as any time that may have occurred before the patent was issued), FDA's determination of the length of a regulatory review period for a human drug product will include all of the testing phase and approval phase as specified in 35 U.S.C. 156(g)(1)(B).

FDA recently approved for marketing the human drug product Neurolite®. Neurolite® (Technetium TC–99M Bicisate) single photon emission computerized tomography (SPECT) is indicated as an adjunct to conventional computed tomography (CT) or magnetic resonance imaging (MRI) in the localization of stroke in patients in whom stroke has already been diagnosed. Subsequent to this approval, the Patent and Trademark Office received a patent term restoration application for Neurolite® (U.S. Patent No. 5,279,811) from Dupont Merck Pharmaceutical Co., and the Patent and Trademark Office requested FDA's assistance in determining this patent's eligibility for patent term restoration. In a letter dated march 28, 1995, FDA advised the Patent and Trademark Office that this human drug product had undergone a regulatory review period and that the approval of Neurolite® represented the first permitted commercial marketing or use of the product. Shortly thereafter, the Patent and Trademark Office requested that FDA determine the product's regulatory review period.

FDA has determined that the applicable regulatory review period for Neurolite® is 2,595 days. Of this time, 1,602 days occurred during the testing phase of the regulatory review period, while 993 days occurred during the approval phase. These periods of time were derived from the following dates:

1. *The date an exemption under section 505(i) of the Federal Food, Drug, and Cosmetic Act (21 U.S.C. 355(i)) became effective*: October 18, 1987. The applicant claims September 18, 1987, as the date the investigational new drug application (IND) became effective. However, FDA records indicate that the IND effective date was October 18, 1987, which was 30 days after FDA receipt of the IND.

2. *The date the human drug was initially submitted with respect to the human drug product under section 505(b) of the Federal Food, Drug, and Cosmetic Act*: March 6, 1992. The applicant claims March 5, 1992, as the date the new drug application (NDA) for Neurolite® (NDA 20–256) was initially submitted. However, FDA records indicate that NDA 20–256 was submitted on March 6, 1992.

3. *The date the application was approved*: November 23, 1994. FDA has verified the applicant's claim that NDA 20–256 was approved on November 23, 1994.

This determination of the regulatory review period establishes the maximum potential length of a patent extension. However, the U.S. Patent and Trademark Office applies several statutory limitations in its calculations of the actual period for patent extension. In its application for patent extension, this applicant seeks 156 days of patent term extension.

Anyone with knowledge that any of the dates as published is incorrect may, on or before July 25, 1995, submit to the Dockets Management Branch (address above) written comments and ask for a redetermination. Furthermore, any interested person may petition FDA, on or before November 22, 1995, for a determination regarding whether the applicant for extension acted with due diligence during the regulatory review period. To meet its burden, the petition must contain sufficient facts to merit an FDA investigation. (See H. Rept. 857, part 1, 98th Cong., 2d sess., pp. 41–42, 1984.) Petitions should be in the format specified in 21 CFR 10.30.

Comments and petitions should be submitted to the Dockets Management Branch (address above) in three copies (except that individuals may submit single copies) and identified with the docket number found in brackets in the heading of this document. Comments and petitions may be seen in the Dockets Management Branch between 9 a.m. and 4 p.m., Monday through Friday.

Dated: May 15, 1995.

Stuart L. Nightingale,

Associate Commissioner for Health Affairs.

[FR Doc. 95–13033 Filed 5–25–95; 8:45 am]

BILLING CODE 4160–01–F

Health Resources and Services Administration

National Practitioner Data Bank; Change in Methods of Fee Payment

The Health Resources and Services Administration (HRSA), Public Health Service (PHS), Department of Health and Human Services (DHHS), is announcing a change in the method for payment of fees that are charged entities authorized to request information from the National Practitioner Data Bank (Data Bank).

The Data Bank is authorized by the Health Care Quality Improvement Act of 1986 (the Act), title IV of Public Law 99–660, as amended (42 U.S.C. 11101 et seq.). Regulations at 45 CFR Part 60 implementing the Data Bank authorize the reporting and release of information concerning: (1) Payments made for the benefit of physicians, dentists, and other

health care practitioners as a result of medical malpractice actions or claims; and (2) certain adverse actions taken regarding the licenses and clinical privileges of physicians and dentists. Section 60.3 of these regulations should be consulted for the definition of terms used in this announcement.

Section 427(b)(4) of the Act authorizes the establishment of fees for the costs of processing requests for disclosure and of providing such information. A final rule published elsewhere in this issue of the **Federal Register** amends the existing Data Bank regulations (45 CFR part 60) to remove regulatory restrictions on allowable methods of payment to permit the Secretary to announce alternate payment methods through periodic notice in the **Federal Register**. Section 60.12(c)(3) of the regulations states that the Secretary shall announce the method of payment of fees payable to the Data Bank through periodic announcement in the **Federal Register**. In determining the method, the Secretary shall consider efficiency, effectiveness, and convenience for the Data Bank users and the Department.

An assessment of the full operating costs related to processing requests for disclosure of Data Bank information as required by the DHHS Appropriations Act of 1994 (title II of Pub. L. 103–112, dated October 21, 1993), as well as the comparative costs of the various methods for filing and paying for queries has resulted in a decision to expand the options for methods of payment of Data Bank fees available to users.

Effective upon publication, the following methods of fee payment will all be accepted by the Data Bank: credit card, electronic funds transfer, check or money order.

Allowable methods of fee payment will be reviewed periodically and revised as necessary, based upon experience. Any changes in the methods of fee payment accepted, and the effective date of the change, will be announced in the **Federal Register**.

Dated: March 14, 1995.

Ciro V. Sumaya,

Administrator.

[FR Doc. 95–12908 Filed 5–25–95; 8:45 am]

BILLING CODE 4160–15–P

Public Health Service

RIN 0905–ZA91

Notice Regarding Section 602 of the Veterans Health Care Act of 1992 New Drug Pricing

AGENCY: Public Health Service, HHS.

ACTION: Notice.

SUMMARY: Section 602 of Public Law 102–585, the ''Veterans Health Care Act of 1992,'' enacted section 340B of the Public Health Service Act (''PHS Act''), ''Limitation on Prices of Drugs Purchased by Covered Entities.'' Section 340B provides that a manufacturer who sells covered outpatient drugs to eligible entities must sign a pharmaceutical pricing agreement with the Secretary of Health and Human Services in which the manufacturer agrees to charge a price for covered outpatient drugs that will not exceed an amount determined under a statutory formula.

The purpose of this notice is to inform interested parties of the following proposed guidelines relative to new drug pricing. Public comment is invited.

DATES: The public is invited to submit comments on the proposed guidelines by June 26, 1995. After consideration of the comments submitted, the Secretary will issue the final guidelines.

FOR FURTHER INFORMATION CONTACT: Marsha Alvarez, R. Ph., Director, Drug Pricing Program, Bureau of Primary Health Care, Health Resources and Services Administration, 4350 East West Highway, 10th Floor, Bethesda, MD 20814, Phone (301) 594–4353, FAX (301) 594–4982.

SUPPLEMENTARY INFORMATION: The Office of Drug Pricing has developed the following guidelines to facilitate program implementation:

New Drug Pricing

Calculation of the current quarter PHS ceiling price for each covered outpatient drug, as provided in section 340B(a)(1) of the PHS Act, is based upon data supplied to the Medicaid Drug Rebate Program (i.e., average manufacturer price, ''AMP,'' and Best Price, ''BP''). The manufacturer calculates pricing information for all of its covered outpatient drugs and sends this pricing data to the Health Care Financing Administration (HCFA) within 30 days after the end of the quarter. HCFA provides PHS with the data necessary for PHS to determine the ceiling price. PHS determines the ceiling price based on the rebate required under the Medicaid drug rebate program. For calendar year 1995, the Medicaid basic rebate for single source and innovator multiple source drugs is the greater of 15.2 percent of the AMP or the AMP minus best price. In calendar year 1996 and thereafter, the rebate percentage decreases to 15.1 percent. An additional rebate must also be paid for single source and innovator multiple source drugs in the amount by which the increase in the AMP exceeds the increase in the Consumer Price Index—Urban (CPI–U). The PHS ceiling price is computed based on the combined basic and additional rebate amounts under the Medicaid program. For non-innovator multiple source drugs, the rebate percentage is 11 percent of the AMP.

For PHS pricing purposes, the timeframe for reporting the pricing data is a problem with respect to new drugs because there is a two quarter lag for new drug pricing information. For new drugs, AMP is not available until after the end of the first full quarter after the day on which the drug was first sold. For example, if a new drug was first sold on January 15, the AMP for the first full quarter would not be available until after June 30. Manufacturers would report the baseline AMP for this new drug to HCFA by July 31.

This time lag is not a problem for the State Medicaid agencies because they bill manufacturers for a rebate after the covered outpatient drugs are dispensed to Medicaid beneficiaries. However, to comply with the requirements of section 340B of the PHS Act, the PHS ceiling price must be determined before the covered outpatient drug is sold to the covered entity.

Because there is no sales data for a new drug from which to determine the PHS ceiling price, the Office of Drug Pricing is proposing to utilize a ceiling price estimated by the manufacturer until sufficient data is available to calculate the AMP and BP of the new drug. Any adjustments necessary to reconcile differences between the estimated and the actual ceiling price will be in the form of a retroactive charge back or rebate after the actual ceiling price is established.

Because the manufacturer calculates the PHS ceiling price using a two quarter data lag, the manufacturer could estimate the new drug ceiling price for three quarters. For example, a new drug that comes on the market in February (January–March quarter) will have an estimated PHS ceiling price for that quarter. AMP and BP data will be collected during the second quarter (April–June) and submitted to HCFA within 30 days after the third quarter (July–September) for calculation of the rebate percentage. Because pricing needs to be transmitted to wholesalers two weeks before the beginning of the quarter, an accurate PHS ceiling price for the third quarter will not be available at that time. The manufacturer must continue to estimate the PHS ceiling price for the second and third quarters, and will be able to calculate an accurate PHS ceiling price for the fourth

quarter (October–December). All retroactive charge back or rebate adjustments necessary to reconcile the estimated ceiling price with the actual ceiling price must be completed by the end of the next quarter (i.e., March 31 of the next year).

Dated: May 10, 1995.

Ciro V. Sumaya,

Administrator, Health Resources and Services Administration.

[FR Doc. 95–13031 Filed 5–25–95; 8:45 am]

BILLING CODE 4160–15–P

DEPARTMENT OF HOUSING AND URBAN DEVELOPMENT

Office of the Assistant Secretary for Housing-Federal Housing Commissioner

[Docket No. N–95–3762; FR–3613–N–03]

Announcement of Funding Awards for Preservation Support Grants and Partial Cancellation

AGENCY: Office of the Assistant Secretary for Housing, HUD.

ACTION: Announcement of funding awards and notice of partial cancellation.

SUMMARY: The Notice of Funding Availability (NOFA) published in the **Federal Register** on June 14, 1994 (59 FR 30640), announced the availability of up to $6 million in funding for Preservation Support Grants. Eligible applicants could apply in one of two categories. First, Outreach and Training; and second, Preservation Activity Grants. This announcement notifies the public of the cancellation of the Preservation Activity Grant, in part, because the language of the NOFA did not allow HUD to select the types of activities it wished to fund. The Department would have been required to fully fund applicants in rank order, even if part or all of a high ranking application contained activities that the Department did not find appropriate for the current needs of the Preservation program.

In accordance with section 102(a)(4)(C) of the Department of Housing and Urban Development Reform Act of 1989, this announcement notifies the public of funding decisions made by the Department under the Preservation Support Grants NOFA. This announcement contains the names and addresses of the award winners and the amounts of the awards for the Outreach and Training Grants.

FOR FURTHER INFORMATION CONTACT: Kerry J. Mulholland, Acting Director, Preservation Division, Department of Housing and Urban Development, 451 Seventh Street, SW, Washington, DC 20410, telephone (202) 708–2300, extension 2649. The TDD number for the hearing impaired is (202) 708–9300. (These are not toll-free numbers.)

SUPPLEMENTARY INFORMATION: The Outreach and Training grant funds were made available to resident-controlled or community-based nonprofit organizations with experience in resident education and organizing to conduct community-, city-, or county-wide outreach to identify, organize and deliver training to residents of eligible low-income housing.

The 1995 awards announced in this Notice were selected for funding based on applications submitted pursuant to the NOFA published in the **Federal Register** on June 14, 1994 (59 FR 30640). Applications were reviewed and selected for funding on the basis of selection criteria contained in that Notice.

A total of $3.4 million was awarded to 10 grantees who will aid residents in organizing and in possibly pursuing the purchase of developments where affordable status is threatened. In accordance with section 102(a)(4)(C) of the Department of Housing and Urban Development Reform Act of 1989 (Pub. L. 101–235, approved December 15, 1989), the Department is publishing the names, addresses, and amounts of those awards as follows:

LOW INCOME HOUSING: PRESERVATION SUPPORT GRANTS FOR OUTREACH AND TRAINING

Tides Foundation/Coalition for Low Income Housing, 1388 Sutter Street, San Francisco, CA	$358,500
Boston Affordable Coalition, 353 Columbus Avenue, Boston, MA	450,000
Antidisplacement Project, 57 School Street, Springfield, MA	395,257
Metropolitan Tenants Organization, 2125 W. North Avenue, Chicago, IL	288,000
L. A. Center for Affordable Tenant Housing, 1296 N. Fairfax Avenue, Los Angeles, CA	450,000
Ironbound Community Corporation, 95 Fleming Avenue, Newark, NJ	144,000
Reston Interfaith Housing, 2329 Hunter Woods Plaza, Reston, VA	216,000
Texas Tenants Union, 5405 East Grand Avenue, Dallas, TX	297,000
Metropolitan Tenants Organization, 2125 West North Avenue, Chicago, IL	288,000
California Coalition for Rural Housing, 926 J Street, Suite 422, Sacramento, CA	450,000
New York State Tenant & Neighborhood Information Service, 248 Hudson Avenue, Albany, NY	450,000

Dated: May 17, 1995.

Nicolas Retsinas,

Assistant Secretary for Housing, Federal Housing Commissioner.

[FR Doc. 95–12920 Filed 5–25–95; 8:45 am]

BILLING CODE 4210–27–M

Office of the Assistant Secretary for Community Planning and Development

[Docket No. N–95–1917; FR–3778–N–38]

Federal Property Suitable as Facilities to Assist the Homeless

AGENCY: Office of the Assistant Secretary for Community Planning and Development, HUD.

ACTION: Notice.

SUMMARY: This Notice identifies unutilized, underutilized, excess, and surplus Federal property reviewed by HUD for suitability for possible use to assist the homeless.

EFFECTIVE DATE: May 26, 1995.

ADDRESSES: For further information, contact David Pollack, Department of Housing and Urban Development, Room 7254, 451 Seventh Street SW., Washington, DC 20410; telephone (202) 708–1234; TDD number for the hearing- and speech-impaired (202) 708–2565, (these telephone numbers are not toll-free), or call the toll-free Title V information line at 1–800–927–7588.

SUPPLEMENTARY INFORMATION: In accordance with the December 12, 1988 court order in *National Coalition for the*

Homeless V. Veterans Administration, No 88–2503–OG (D.D.C.), HUD publishes a Notice, on a weekly basis, identifying unutilized, underutilized, excess and surplus Federal buildings and real property that HUD has reviewed for suitability for use to assist the homeless. Today's Notice is for the purpose of announcing that no additional properties have been determined suitable or unsuitable this week.

Correction

The Navy Family Housing in Chicopee, Massachusetts, water and electrical services, will be inoperable once the military vacates the property. A substantial and costly utility systems modifications will be necessary. These properties appeared in the May 19, 1995 **Federal Register**.

Dated: May 19, 1995.

Jacquie M. Lawing,

Deputy Assistant Secretary for Economic Development.

[FR Doc. 95–12799 Filed 5–25–95; 8:45 am]

BILLING CODE 4210–29–M

DEPARTMENT OF THE INTERIOR

Bureau of Land Management

Notice for Publication, AA–6986–A and AA–6986–C Alaska Native Claims Selection; Alaska

[AK–962–1410–00–P]

In accordance with Departmental regulation 43 CFR 2650.7(d), notice is hereby given that a decision to issue conveyance under the provisions of Sec. 16(b) of the Alaska Native Claims Settlement Act of December 18, 1971, 43 U.S.C. 1601, 1615(b), will be issued to the Cape Fox Corporation for certain lands in the vicinity of Ketchikan, Alaska.

Copper River Meridian, Alaska

Tps. 74 S., Rs. 90 and 91 E.

A notice of the decision will be published once a week, for four (4) consecutive weeks, in the Ketchikan Daily News. Copies of the decision may be obtained by contacting the Alaska State Office of the Bureau of Land Management, 222 West Seventh Avenue, #13, Anchorage, Alaska 99513–7599 ((907) 271–5960).

Any party claiming a property interest which is adversely affected by the decision, an agency of the Federal government or regional corporation, shall have until June 26, 1995 to file an appeal. However, parties receiving service by certified mail shall have 30 days from the date of receipt to file an appeal. Appeals must be filed in the Bureau of Land Management at the address identified above, where the requirements for filing an appeal may be obtained. Parties who do not file an appeal in accordance with the requirements of 43 CFR Part 4, Subpart E, shall be deemed to have waived their rights.

Jerri E. Sansone,

Land Law Examiner, Branch of Gulf Rim Adjudication.

[FR Doc. 95–12956 Filed 5–25–95; 8:45 am]

BILLING CODE 4310–JA–P

[AZ–040–7122–00–5513; AZA 28793]

Notice of Proposed Exchange of Lands in Cochise County, Graham, Pima, and Santa Cruz Counties, AZ

AGENCY: Bureau of Land Management, Interior.

ACTION: Notice.

SUMMARY: Notice is hereby given that the Bureau of Land Management is considering a proposal to exchange land pursuant to Section 206 of the Federal Land Policy and Management Act of 1976 (43 U.S.C. 1716), as amended. The exchange has been proposed by the Phelps Dodge Corporation and is referred to as the Safford Exchange Project. The following described public land is being considered for disposal by the United States:

Gila and Salt River Meridian, Arizona

T. 6 S., R. 25 E.,
Sec. 13, N½;
Sec. 14, NE¼.
T. 5 S., R., 26 E.,
Sec. 19, SE¼;
Sec. 20, lot 1, SW¼, N½SE¼, SW¼SE¼;
Sec. 22, part of SE¼;
Sec. 23, part of W½W½SW¼;
Sec. 26, part of W½;
Sec. 27, part of E½E½;
Sec. 28, lots 1–5, inclusive;
Sec. 29, lots 1 and 2, W½NE¼, NW¼, S½;
Sec. 30, lots 3 and 4, E½, E½SW¼;
Sec. 33, lots 1–5, inclusive, S½SW¼;
Sec. 34, lots 1–7, inclusive, NE¼SE¼;
Sec. 35, lots 4–9, inclusive, SE¼NE¼, E½SE¼;
T. 6 S., R. 26 E.,
Sec. 1, lots 3–10, inclusive, lots 13, 14, 16, 17 and 18, SW¼NW¼, NW¼SW¼, S½SW¼, Part of Tract 37, part of MS4590;
Sec. 2, lots 5–10, inclusive, SW¼NW¼, S½;
Sec. 3, lots 1, 2, 3 and 6, S½N½, S½;
Sec. 4, lots 1–4, inclusive, S½NE¼, SE¼NW¼, S½;
Sec. 5, lot 1, E½SW¼, SE¼;
Sec. 8, E½, E½NW¼, E½W½NW¼, NE¼SW¼, E½NW¼SW¼, E½SE¼SW¼;
Sec. 9, All;
Sec. 10, All;
Sec. 11, All;
Sec. 12, lots 5–13, inclusive, NW¼, part of Tract 37, Tract 38;
Sec. 14, All;
Sec. 15, All;
Sec. 16, N½;
Sec. 17, N½;
Sec. 18, lots 1 and 2, NE¼, E½NW¼;
Sec. 23, NE½.
T. 5 S., R. 27 E.,
Sec. 31, lots 1 and 2, NE¼, E½NW¼;
Sec. 32, lots 1 and 2, N½, N½SW¼, SE½;
Sec. 33, All.
T. 6 S., R. 27 E.,
Sec. 3, lots 3 and 4, S½NW¼, SW¼;
Sec. 6, lots 5, 12, 13 and 14, Part of MS4590;
Sec. 7, lots 9 and 12, part of Tract 37;
Sec. 9, lots 1, 2, 3, 5, 6 and 7, S½NE¼, SE¼NW¼, E½SW¼, SE¼;
Sec. 10, NW¼;
Sec. 17, lots 1, 3, 4 and 5, E½NE¼, S½;
Sec. 18, lots 5–9, inclusive, part of tract 37;
Sec. 20, N½.

The areas described aggregate approximately 15,000 acres.

Subject to valid existing rights, the public land identified above has been segregated from appropriation under the public land laws, mineral laws, and mineral leasing laws for a period of five years beginning on December 15, 1994. In exchange the United States will acquire the following described land from Phelps Dodge Corporation:

Gila and Salt River Meridian, Arizona

T. 18 S., R. 16 E.,
Sec. 24, lots 1–4, inclusive, W½NE¼, NW¼, W½SE¼.
T. 18 S., R. 18 E.,
Sec. 5, lots 1 and 2, S½NE¼, SE¼;
T. 20 S., R. 18 E.,
Sec. 9, SE¼;
Sec. 10, S½SW¼.
T. 5 S., R. 22 E.,
Sec. 25, SW¼, SW¼SE¼.
T. 5 S., R. 23 E.,
Sec. 30, NE¼NE¼, W½NE¼, E½NW¼.
T. 5 S., R. 27 E.,
Sec. 3, S½SW¼NW¼, N½SW¼, NW¼SE¼;
Sec. 10, S½NE¼ excluding 5 acres, NE¼SE¼;
Sec. 11, NW¼SW¼;
Sec. 14, W½;
Sec. 23, W½.
T. 14 S., R. 28 E.,
Sec. 9, E½SE¼;
Sec. 10, NE¼, E½NW¼, S½.

The areas described aggregate approximately 2,963.00 acres.

More detailed information concerning the proposed exchange may be obtained by contacting Tom Terry, Project Manager, Safford District Office, 711 14th Avenue, Safford, Arizona 85546, (520) 428–4040 or, William J. Ruddick, Team Leader, Arizona Exchange Team, Phoenix District office, 2015 West Deer Valley Road, Phoenix, Arizona 85027, (602) 780–8090.

Interested parties may submit comments concerning the proposed exchange to the District Manager, Safford District Office, at the above Safford address. In order to be considered in the environmental analysis of the proposed exchange, comments must be in writing to the District Manager and be postmarked within 45 days after the initial publication of this notice.

Dated: May 9, 1995.

William T. Civish,

District Manager.

[FR Doc. 95–12918 Filed 5–25–95; 8:45 am]

BILLING CODE 4310–32–M

[WY–923–1400; WYW 123107]

Notice of Conveyance and Opening Order; Wyoming

AGENCY: Bureau of Land Management, Interior.

ACTION: Notice of exchange of public land in Park County for private land in Big Horn and Park Counties, and order providing for opening of public land.

SUMMARY: This notice advises the public of completion of a two-phased, equal value exchange of land between the Bureau of Land Management and Hunt Oil Company, under the authority of Section 206 of the Federal Land Policy and Management Act of 1976, 43 U.S.C. 1716, as amended by the Federal Land Exchange Facilitation Act of 1988, Public Law 100-409. The order opens the land acquired by the United States to the operation of the public land and mining laws, and additionally opens lands which were initially segregated and not selected for the final exchange transaction.

EFFECTIVE DATE: May 26, 1995.

FOR FURTHER INFORMATION CONTACT: Tamara Gertsch, BLM Wyoming State Office, P.O. Box 1828, 2515 Warren Avenue, Cheyenne, Wyoming 82003, 307–775–6115.

SUPPLEMENTARY INFORMATION:

1. The following Federal land has been conveyed to Hunt Oil Company:

Sixth Principal Meridian

T. 49 N., R. 99 W.,
Sec. 4, lot 5;
Sec. 7, lots 5 and 23;
Sec. 9, W½NW¼, NW¼SW¼;
Sec. 17, lot 8, SW¼SE¼;
Tract 41, lots 26, 32, 34, and 37.
T. 50 N., R. 99 W.,
Sec. 30, lots 13 and 14;
Sec. 31, lot 37;
Sec. 32, lot 8;
Sec. 33, lots 4 and 23, SE¼SW¼, S½SE¼.
Tract 41.
T. 53 N., R. 99 W.,
Sec. 27, NW¼, NW¼SW¼;
Sec. 28, E½, E½W½;
Sec. 30, lot 1;
Sec. 32, NW¼NW¼.
T. 50 N., R. 101 W.,
Sec. 1, SW¼NW¼, W½SW¼;
Sec. 2, lots 1-3, S½NE¼, E½SE¼;
Sec. 4, lot 5, NE¼SW¼;
Sec. 6, lots 3-7;
Sec. 10, NE¼, E½NW¼, NE¼SW¼, N½SE¼;
Sec. 12, NW¼, NW¼SW¼;
Sec. 14, NE¼NE¼, S½NE¼;
Sec. 16, lot 1;
Lot 52.
T. 51 N., R. 101 W.,
Sec. 18, lot 12;
Sec. 19, lot 5, NW¼NE¼, S½NE¼, SE¼;
Sec. 20, lots 7-9;
Sec. 22, lots 2-6, S½SW¼, SW¼SE¼;
Sec. 27, NE¼, NE¼SE¼, E½SW¼;
Sec. 28, lot 2, S½SE¼;
Sec. 30, lots 1 and 2;
Sec. 31, lots 1-5, W½NE¼, SE¼NE¼, E½W½, NW¼SE¼;
Sec. 32, lots 2-4;
Sec. 34, lots 1 and 2;
Sec. 35, lot 7, SE¼SW¼;
Tract 38A, Tract 38B, Tract 38C, and Tract 71J.
T. 50 N., R. 102 W.,
Sec. 1, lot 1, SE¼NE¼;
Sec. 9, lot 1;
Sec. 10, lots 1 and 2;
Sec. 12, lots 1, 2, and 5;
Sec. 13, lot 3;
Sec. 15, lot 1;
Sec. 22, lot 9.
T. 51 N., R. 102 W.,
Sec. 16, lot 4;
Sec. 19, SE¼NW¼;
Sec. 36, lots 1 and 6, SE¼NE¼, E½SE¼;
Tract 80A.
T. 50 N., R. 103 W.,
Sec. 5, lots 1 and 2.
T. 51 N., R. 103 W.,
Sec. 14, lot 6, SW¼SW¼;
Sec. 15, lot 5, SE¼SW¼, SE¼;
Sec. 21, lots 1–4;
Sec. 22, N½, N½SW¼, SE¼;
Sec. 23, SW¼;
Sec. 27, N½NE¼;
Sec. 33, lot 2;
Sec. 35, lot 12.
T. 50 N., R. 104 W.,
Sec. 1, lots 10, 11, and 14;
Sec. 2, lot 6;
Sec. 10, lots 8 and 10;
Sec. 11, lots 13 and 16, NE¼NE¼;
Sec. 14, lots 7, 11, and 14.
The land described contains 6,784.00 acres.

2. The above described land in addition to other land was segregated from appropriation under the public land and mining laws by Notices of Proposed Exchanges (WYW 123107), which published in the **Federal Register** on July 28, 1992, and on April 1, 1993, at (57 FR 33365 and 58 FR 17279), respectively, and were corrected by publication in the **Federal Register** on May 11, 1993, at (58 FR 27740).

3. In exchange for the land described in paragraph 1, the U.S. acquired the following non-Federal land from Hunt Oil Company:

Sixth Principal Meridian

T. 49 N., R. 96 W.,
Sec. 32, E½, E½NW¼;
Sec. 33, W½NW¼, SW¼.
T. 49 N., R. 97 W.,
Sec. 22, S½;
Sec. 23, SW¼, W½SE¼.
T. 53 N., R. 98 W.,
Sec. 18, lots 1, 2, and E½NW¼.
T. 53 N., R. 99 W.,
Sec. 17, lots 1–3, NW¼, N½SW¼;
Sec. 18, NE¼NE¼, SE¼NE¼;
Sec. 21, NE¼SE¼NE¼;
Sec. 22, SW¼NW¼, E½NW¼SW¼;
Sec. 27, N½NE¼, SE¼NE¼.
T. 53 N., R. 100 W.,
Sec. 12, NE¼SE¼;
Sec. 22, SE¼SE¼;
Sec. 33, SE¼NE¼;
Sec. 34, S¼NW¼, SW¼NE¼.
T. 49 N., R. 103 W.,
Sec. 4, lots 1–5, SW¼NE¼, SE¼NW¼, SW¼, W½SE¼, SE¼SE¼;
Sec. 5, lots 1–5, 8, 9, S½NW¼, SW¼, S½SE¼;
Sec. 6, SE¼NE¼, SE¼SW¼;
Sec. 7, NE¼, NE¼NW¼;
Sec. 8, W½NE¼, SE¼NE¼, NW¼;
Sec. 9, N½;
Lot 43, Lot 44A, and Lot 44B.
The land described contains 4,371.18 acres.

4. At 9 a.m. on May 26, 1995, the land described in paragraph 3 shall be open to the operation of the public land and mineral laws, subject to valid existing rights, the provisions of existing withdrawals, and the requirements of applicable law. All valid applications received at or prior to 9 a.m. on May 26, 1995, shall be considered as simultaneously filed at that time. Those received thereafter shall be considered in the order of filing.

5. At 9 a.m. on May 26, 1995, the following land which was segregated as described in paragraph 2, but was not part of the final selected Federal land in the exchange, shall be open to the operation of the public land and mining laws, subject to valid existing rights, the provisions of existing withdrawals, and the requirements of applicable law. All valid applications received at or prior to 9 a.m. on May 26, 1995, shall be considered as simultaneously filed at that time. Those received thereafter shall be considered in the order of filing.

Sixth Principal Meridian

T. 53 N., R. 99 W.,
Sec. 18, lots 9 and 10;
Sec. 19, lots 1 and 2.
T. 53 N., R. 100 W.,
Sec. 25, E½NE¼, W½W½, SE¼.
T. 51 N., R. 101 W.,
Sec. 18, lot 11.
T. 50 N., R. 102 W.,
Sec. 7, lot 14;

Sec. 17, SW¼SW¼;
Sec. 18, lots 5, 7, 8, 9, 10 and SE¼SE¼;
Sec. 19, lots 3, 4, 5, 6, and W½NE¼, SE¼NE¼, E½W½;
Sec. 20, NE¼SE¼.
T. 51 N., R. 102 W.,
Sec. 23, SW¼SE¼;
Sec. 26, W½NE¼.

Melvin Schlagel,

Realty Specialist.

[FR Doc. 95–12949 Filed 5–25–95; 8:45 am]

BILLING CODE 4310–22–P

[AK–042–05–1220–00]

Limited Use to Dog Mushing Wheeled Carts or Vehicles on Public Lands in the Anchorage District, AL

AGENCY: Bureau of Land Management, Interior.

ACTION: Notice of limited use to dog mushing wheeled carts or vehicles on public lands in the Anchorage District, Anchorage, Alaska.

SUMMARY: Closure of all lands and waters, within the 730 acre Campbell Tract Facility, Anchorage District, to dog mushing wheeled carts or vehicles during the snow free season. This snow free season closure is being established to reduce degradation of the trails and conflicts with other user groups. The intended effect is a safer, more natural environment.

EFFECTIVE DATE: The limited use of dog mushing wheeled carts or vehicles on Campbell Tract is effective July 1, 1995.

ADDRESSES: For further information contact Nicholas Douglas, Bureau of Land Management (BLM), Anchorage District Office, 6881 Abbott Loop Road, Anchorage, Alaska 99507; Telephone (907) 267–1248.

FOR FURTHER INFORMATION CONTACT: Janelle Eklund, (907) 267–1278.

SUPPLEMENTARY INFORMATION: Authority for this limited use of dog mushing wheeled carts or vehicles is contained in CFR Title 43, Chapter II, Part 8360, Subparts 8365.1, and 8365.1–6.

Dated: May 17, 1995.

Tom Allen,

State Director.

[FR Doc. 95–12952 Filed 5–25–95; 8:45 am]

BILLING CODE 4310–JA–M

Fish and Wildlife Service

Endangered and Threatened Species Permit Applications

AGENCY: Fish and Wildlife Service, Interior.

ACTION: Notice of receipt of applications.

The following applicants have applied for a permit to conduct certain activities with endangered species. This notice is provided pursuant to section 10(c) of the Endangered Species Act of 1973, as amended (16 U.S.C. 1531, *et seq.).*

Permit No. PRT–802776

Applicant: 3D/Environmental, Cincinnati, Ohio.

The applicant requests a permit to conduct mussel surveys which involve non-lethal take of the Eastern fanshell mussel (*Cyprogenia stegaris*) in the Wabash River, Wabash County, Indiana, for enhancement of propagation or survival of the species.

Permit No. PRT–802777

Applicant: John O. Whitaker, Jr., Terre Haute, Indiana.

The applicant requests a permit to bank Indiana bats (*Myotis sodalis*) and gray bats (*Myotis grisescens*) in the States of Indiana, Ohio, Illinois, and Kentucky for enhancement of propagation or survival of the species.

Written data or comments should be submitted to the Regional Director, U.S. Fish and Wildlife Service, Division of Endangered Species, 1 Federal Drive, Fort Snelling, Minnesota 55111–4056, and must be received within 30 days of the date of this publication.

Documents and other information submitted with these applications are available for review by any party who submits a written request for a copy of such documents to the following office within 30 days of the date of publication of this notice: U.S. Fish and Wildlife Service, Division of Endangered Species, 1 Federal Drive, Fort Snelling, Minnesota 55111–5046. Telephone: (612/725–3536, x250); FAX: (612/725–3526).

Dated: May 19, 1995.

John A. Blankenship,

Assistant Regional Director, Ecological Services, Region 3, Fish and Wildlife Service, Fort Snelling, Minnesota.

[FR Doc. 95–12953 Filed 5–25–95; 8:45 am]

BILLING CODE 4310–55–M

National Park Service

Notice of Intent To Issue a Prospectus for the Operation and Management of Two Full-Service Gymnasiums and Swimming Pool

SUMMARY: The National Park Service is seeking a concessioner to operate, under a ten year contract, two full-service gymnasiums and an indoor swimming pool facility at the Presidio of San Francisco, Golden Gate National Recreation Area. These facilities would be operated for the public under the provisions of a Concession Contract to be issued through a two part concessioner selection process. Phase One of the selection process is to establish a list of experienced and financially able organizations. Those selected organizations will be asked to make offers under the terms of a Phase Two Prospectus. This notice is the formal announcement of the availability of this business opportunity, the initiation of the contracting process, and of Phase One of that process.

SUPPLEMENTAL INFORMATION: The Presidio has been transferred from the Department of the Army to the National Park Service and is a component of Golden Gate National Recreation Area. A number of facilities will now become available for public use under the administration of the National Park Service. The two gymnasiums and an indoor swimming pool are some of these facilities.

The National Park Service is seeking organizations to qualify under the Phase One process for the management and operation of the two gymnasiums and indoor swimming pool facilities being deactivated by the Department of the Army, place them in effective operation for the public promptly, finance daily operations, and finance and make such repairs and improvements as may be necessary to conduct safe, quality operations and meet the operational needs of the operators.

In this regard the requirements that must be met in Phase One in order for an offeror to be asked to participate in Phase Two include demonstrated current experience in operating health club and recreational facilities similar to those offered by this notice and a demonstrated financial ability to start operations promptly and to make the needed improvements.

Those organizations that do not participate in or qualify under the Phase One process will not be eligible to participate in the Phase Two process.

If you feel that your organization would be interested in this business opportunity and could demonstrate the necessary operational experience and financial stability and strength, please ask to be placed on the mailing list for the Phase One Prospectus by writing or calling: National Park Service, Concession Program Management Division, 600 Harrison Street, Suite 600, San Francisco, CA 94107–1327, or call: (415) 744–3981—Teresa Jackson.

When the Phase I Prospectus is issued, submittals will be accepted for a Thirty (30) day period under terms

that will be described in the Phase I Prospectus. The release of the Phase I Prospectus is expected to occur shortly after the publication of this notice.

Dated: May 16, 1995.

Stanley T. Albright,

Regional Director, Western Region.

[FR Doc. 95–12940 Filed 5–25–95; 8:45 am]

BILLING CODE 4310–70–P

Pea Ridge National Military Park Advisory Team; Meeting

Notice is hereby given in accordance with the Federal Advisory Committee Act that a meeting of the Pea Ridge National Military Park Advisory Team will be held at 7 p.m., on Thursday, June 15, 1995, in the park visitor center auditorium, 15930 Highway 62, Garfield, Arkansas.

The Pea Ridge National Military Park Advisory Team was established under authority of section 3 of Public Law 91–383 (16 U.S.C. 1a–2(c)) to provide a forum for dialogue between community representatives and the Pea Ridge National Military Park on management issues affecting the park and the community.

The matter to be discussed at this meeting includes:

—Boundary Study

The meeting will be open to the public. However, facilities and space for accommodating members of the public are limited, and persons will be accommodated on a first-come-first served basis. Any member of the public may file a written statement concerning the matters to be discussed with the Superintendent, Pea Ridge National Military Park.

Persons wishing further information concerning this meeting, or who wish to submit written statements may contact Steve Adams, Superintendent, Pea Ridge National Military Park, P.O. Box 700, Pea Ridge, AR 72751–0700, Telephone 501/451–8122.

Minutes of the meeting will be available for public inspection four weeks after the meeting at the office of Pea Ridge National Military Park.

Dated: May 15, 1995.

Jerry Rogers,

Regional Director Southwest Region.

[FR Doc. 95–12993 Filed 5–25–95; 8:45 am]

BILLING CODE 4310–70–M

Subsistence Resource Commission Meeting

AGENCY: National Park Service, Interior.

ACTION: Subsistence Resource Commission meeting.

SUMMARY: The Superintendent of Denali National Park and the Chairperson of the Subsistence Resource Commission for Denali National Park announce a forthcoming meeting of the Denali National Park Subsistence Resource Commission.

The following agenda items will be discussed:

(1) Call to order by Chair.

(2) Roll call and confirmation of quorum.

(3) Superintendent's welcome and introductions.

(4) Review of SRC function and purpose.

(5) Minutes of February 17, 1995, meeting: approval.

(6) Additions and corrections to agenda.

(7) Old business:

a. Roster regulations.

b. Hunting Plan Proposal #7.

c. Northern access routes to Kantishna.

d. Customary and traditional determination issues related to the Parks Highway.

e. Park planning.

f. Agency reports.

(8) Federal Subsistence Management Program update.

a. Federal Subsistence Board actions.

b. Katie John court case update.

(9) New business:

a. NPS trapping regulations.

b. ATV use.

c. Subsistency workgroup report.

(10) Public and other agency comments.

(11) Set time and place of next SRC meeting.

(12) Adjournment.

DATES: The meeting will be held Friday, June 16, 1995. The meeting will begin at 9 a.m. and end at approximately 6 p.m.

LOCATION: The meeting will be held at the McKinley Village Community Center in Denali Park, Alaska.

FOR FURTHER INFORMATION CONTACT: Steve Martin, Superintendent, Denali National Park, PO Box 9, Denali Park, Alaska 99755. Phone (907) 683–2294.

SUPPLEMENTARY INFORMATION: The Subsistence Resource Commissions are authorized under Title VIII, Section 808, of the Alaska National Interest Lands Conservation Act, Pub. L. 96–487, and operate in accordance with the provisions of the Federal Advisory Committees Act.

Paul R. Anderson,

Acting Regional Director.

[FR Doc. 95–13030 Filed 5–25–95; 8:45 am]

BILLING CODE 4310–70–M

Agenda for the June 17, 1995 Meeting of the Advisory Commission for the San Francisco Maritime National Historical Park; Public Meeting Fort Mason, Building F (Firehouse) 9:00 AM–1:15 PM

9:00 AM
Welcome—Neil Chaitin, Chairman
Opening Remarks—Neil Chaitin, Chairman, Marc Hayman, Acting Superintendent
Old Business
Approval of Minutes

9:15 AM East Coast Trip Report, Neil Chaitin, Chairman

9:30 AM
Orientation to Park Departments
Education, John Cunnane, Supervisory Park Ranger, Revell Carr, Interpretive Specialist, Nancy Martling, Director, Environmental Living Program
Exhibits, Richard Everett, Curator of Exhibits

10:00 AM Update—General Management Plan, Marc Hayman, Acting Superintendent

10:15 AM Advisory Commission Committee Reports, Committee Chairmen

10:30 AM Break

11:00 AM Report on the General Condition of the Historic Ships, Steve Hyman, Acting Ships Manager

11:45 AM Mandated Preservation Methods and Techniques, Cultural Resources Representative, Western Regional Office

12:15 PM Restoration Materials: Historically accurate vs contemporary substitutes, Stephen Canright, Curator of History

12:45 PM Public question and comments

1:00 PM Agenda Items/Date for next meeting

1:15 PM Adjournment

Dated: May 19, 1995.

Bruce M. Kilgore,

Regional Director, Western Region.

[FR Doc. 95–13029 Filed 5–25–95; 8:45 am]

BILLING CODE 4310–70–P

INTERSTATE COMMERCE COMMISSION

Notice of Intent To Engage in Compensated Intercorporate Hauling Operations

This is to provide notice as required by 49 U.S.C. 10524(b)(1) that the named corporations intend to provide or use compensated intercorporate hauling operations as authorized in 49 U.S.C. 10524(b).

1. Parent corporation and address of principal office: Casey's General Stores, Inc., P.O. Box 3001, Ankeny, IA 50021–8045.

2. Wholly owned subsidiary which will participate in the operations, and State(s) of incorporation: Casey's Services Company, Iowa.

Vernon A. Williams,

Secretary.

[FR Doc. 95–12977 Filed 5–25–95; 8:45 am]

BILLING CODE 7035–01–M

[Finance Docket No. 32702]

Eastern Idaho Railroad, Inc.—Trackage Rights Exemption—Union Pacific Railroad Company

Union Pacific Railroad Company (UP) has agreed to grant overhead trackage rights to Eastern Idaho Railroad, Inc. (EIRR) over approximately 23.4 miles of UP trackage located between milepost 274 at Minidoka and milepost 297.4 west of Senter, ID, including the sidings at Senter (milepost 295), Max (milepost 276), and Hawley (milepost 267). The purpose of this transaction is to provide EIRR alternate interchange opportunities with UP during periods of traffic congestion at Minidoka. The trackage rights were to become effective on or after May 16, 1995.

This notice is filed under 49 CFR 1180.2(d)(7). If the notice contains false or misleading information, the exemption is void *ab initio.* Petitions to revoke the exemption under 49 U.S.C. 10505(d) may be filed at any time. The filing of a petition to revoke will not stay the transaction. Pleadings must be filed with the Commission and served on: Karl Morell, Suite 1035, 1101 Pennsylvania Avenue, N.W., Washington, DC 20004.

As a condition to use of this exemption, any employees adversely affected by the trackage rights will be protected pursuant to *Norfolk and Western Ry. Co—Trackage Rights—BN,* 354 I.C.C. 605 (1978), as modified in *Mendocino Coast Ry., Inc.—Lease and Operate,* 360 I.C.C. 653 (1980).

Decided: May 22, 1995.

By the Commission, David M. Konschnik, Director, Office of Proceedings.

Vernon A. Williams,

Secretary.

[FR Doc. 95–12979 Filed 5–25–95; 8:45 am]

BILLING CODE 7035–01–M

[Docket No. AB–55 (Sub-No. 489X)]

CSX Transportation, Inc.—Abandonment Exemption—in Ben Hill and Irwin Counties, GA

AGENCY: Interstate Commerce Commission.

ACTION: Notice of Exemption.

SUMMARY: The Commission exempts from the prior approval requirements of 49 U.S.C. 10903–10904 the abandonment by CSX Transportation, Inc., of 2.71 miles of rail line from milepost SLA–660.6, near Fitzgerald, to milepost SLA–663.31, near Wiggins, in Ben Hill and Irwin Counties, GA, subject to standard labor protective conditions.

DATES: Provided no former expression of intent to file an offer of financial assistance has been received, this exemption will be effective on June 25, 1995. Formal expressions of intent to file an offer of financial assistance under 49 CFR 1152.27(c)(2)[1] are due June 5, 1995. Petitions to stay must be filed by June 12, 1995. Requests for a public use condition in conformity with 49 CFR 1152.28(a)(2) are due June 15, 1995. Petitions for reconsideration must be filed by June 20, 1995.

ADDRESSES: Send pleadings, referring to Docket No. AB–55 (Sub-No. 489X), to: (1) Office of the Secretary, Case Control Branch, Interstate Commerce Commission, 1201 Constitution Avenue N.W., Washington, D.C. 20423; and (2) Petitioner's representative: Charles M. Rosenberger, 500 Water Street, Jacksonville, FL 32202.

FOR FURTHER INFORMATION CONTACT: Beryl Gordon, (202) 927–5610. [TDD for the hearing impaired: (202) 927–5721.]

SUPPLEMENTARY INFORMATION: Additional information is contained in the Commission's decision. To purchase a copy of the full decision, write to, call, or pick up in person from: Dynamic Concepts, Inc., Interstate Commerce Commission Building, 1201 Constitution Avenue, N.W., Room 2229, Washington, D.C. 20423. Telephone: (202) 289–4357/4359. [Assistance for the hearing impaired is available through TDD services at (202) 927–5721.]

Decided: May 11, 1995.

By the Commission, Chairman Morgan, Vice Chairman Owen, and Commissioners Simmons and McDonald.

Vernon A. Williams,

Secretary.

[FR Doc. 95–12980 Filed 5–25–95; 8:45 am]

BILLING CODE 7035–01–M

[1] *See Exempt. of Rail Abandonment—Offers of Finan. Assist.,* 4 I.C.C.2d 164 (1987).

[Docket No. AB–32 (Sub-No. 69)]

Boston and Maine Corporation—Abandonment and Discontinuance of Service—Middlesex County, MA

AGENCY: Interstate Commerce Commission.

ACTION: Exemption from time limit requirements.

SUMMARY: Under 49 U.S.C. 10505, the Commission is exempting Boston and Maine Corporation in this proceeding from the requirements that it post and serve its ''notice of intent'' not more than 30 days prior to filing its application to abandon and discontinue rail service. The Commission is extending the time limit to June 15, 1995 to enable the carrier to conduct additional negotiations with state and local officials aimed at forestalling abandonment or discontinuance.

DATES: The exemption will take effect on May 26, 1995. Petitions to reopen must be filed by June 15, 1995.

ADDRESSES: Send pleadings referring to Docket No. AB–32 (Sub-No. 69) to: (1) Office of the Secretary, Case Control Branch, Interstate Commerce Commission, 1201 Constitution Avenue, NW, Washington, DC 20423; and (2) petitioner's representative: John R. Nadolny, General Counsel, Boston & Maine Corporation, Iron Horse Park, N. Billerica, MA 01862.

FOR FURTHER INFORMATION CONTACT: Joseph H. Dettmar, (202) 927–5660. (TDD for the hearing impaired: (202) 927–5721.)

SUPPLEMENTARY INFORMATION: Under 49 U.S.C. 10904(a)(3)(E), a rail carrier must certify that it has satisfied specified public notice requirements within 30 days prior to filing an application to abandon or discontinue service. Having intended to file its application in this proceeding on May 5, 1995, Boston and Maine Corporation satisfied the notice requirements on or about April 5, 1995. The rail carrier, however, has commenced negotiating with state and local officials and wishes to postpone the date for filing its application until June 15, 1995, to permit additional time for negotiations. Therefore, the Commission is granting the carrier an exemption and extending the time in this proceeding for filing an application after notice is given to June 15, 1995.

Additional information is contained in the Commission's decision. To purchase a copy of the full decision, write to, call, or pick up in person from: Dynamic Concepts, Inc., Interstate Commerce Commission Building, 1201 Constitution Avenue, NW, Room 2229, Washington, DC 20423. Telephone:

(202) 289–4357/4359. (Assistance for the hearing impaired is available through TDD services (202) 927–5721.)

Decided: May 19, 1995.

By the Commission, Chairman Morgan, Vice Chairman Owen, and Commissioners Simmons and McDonald.

Vernon A. Williams,

Secretary.

[FR Doc. 95–12978 Filed 5–25–95; 8:45 am]

BILLING CODE 7035–01–M

DEPARTMENT OF JUSTICE

Notice of Lodging of Consent Decree Pursuant to the Comprehensive Environmental Response, Compensation and Liability Act

In accordance with 42 U.S.C. 9622(d)(2) and 6973(d), and Departmental policy, 28 C.F.R. 50.7, notice is hereby given that a proposed consent decree in *United States* v. Broderick Investment Company, et al., Civil Action No. 86–Z–369, was lodged on May 22, 1995 with the United States District Court for the District of Colorado.

The settlement concerns the Broderick NPL Superfund Site north of Denver, Colorado. The predecessor of the owner of the Site operated a wood treatment plant where wood was treated with creosote, pentachlorophenol, and other hazardous substances. Process wastes and associated sludges were disposed of in impoundments or on the ground at the Site, contaminating soils and groundwater. Pursuant to an earlier partial consent decree, defendants conducted a remedial investigation/feasibility study and EPA completed some of the remedial action at the Site. By the terms of this consent decree, settling defendants (Broderick Investment Company and Tom H. Connolly as trustee for those trusts associated with Broderick Investment) will perform all remaining remedial action at the Site and pay EPA's oversight and related future response costs at the Site. Settling defendants, along with the former trustees of the Broderick Investment Company trusts (Colorado National Bank of Denver, N.A. and First Interstate Bank of Denver, N.A.) will reimburse the United States $10.7 million for past response costs incurred at the Site. In return, settling defendants will receive certain covenants not to sue under Sections 106 and 107 of CERCLA, 42 U.S.C. 9606 and 9607, and Section 7003 of RCRA, 42 U.S.C. 6973.

The Department of Justice will receive, for a period of thirty (30) days from the date of this publication, comments relating to the proposed consent decree. Comments should be addressed to the Assistant Attorney General for the Environment and Natural Resources Division, Department of Justice, Washington, DC 20530, and should refer to *United States* v. *Broderick Investment Company, et al.*, DOJ REf. #90–7–1–254. Commenters may request an opportunity for a public meeting in the affected area, in accordance with Section 7003(d) of RCRA.

The proposed consent decree may be examined at the Office of the United States Attorney, 1961 Stout Street, Suite 1200, Federal Building, Denver, Colorado 80294; the Region VIII Office of the Environmental Protection Agency, 999 18th Street, Suite 700 South, Denver, Colorado 80202; and at the Consent Decree Library, 1120 G Street, NW., 4th Floor, Washington, DC 20005, (202) 624–0892. A copy of the proposed consent decree may be obtained in person or by mail from the Consent Decree Library, 1120 G Street, NW., 4th Floor, Washington, DC 20005. In requesting a copy please refer to the referenced case and enclose a check in the amount of $23.00 (25 cents per page reproduction costs), payable to the Consent Decree Library.

Joel M. Groos,

Acting Chief, Environment and Natural Resources Division, Environmental Enforcement Section.

[FR Doc. 95–13006 Filed 5–25–95; 8:45 am]

BILLING CODE 4410–01–M

[AAG/A Order No. 103–95]

Privacy Act of 1974; New System of Records; Extension of Comment Period

AGENCY: Department of Justice.

ACTION: Notice of new system of records; extension of comment period.

SUMMARY: On April 21, 1995, the Department of Justice, Bureau of Prisons, published in the **Federal Register** a notice of a new system of records entitled ''Telephone Activity Record System (JUSTICE/BOP–011).'' 60 FR 19958–59. The system notice provided for a comment period ending May 22, 1995. 60 FR 19958. In response to a request for an extension of the comment period, the Department of Justice is hereby extending the comment period for an additional 30 days, until June 26, 1995.

DATES: The comment period is extended to June 26, 1995.

ADDRESSES: Comments should be addressed to Patricia E. Neely, Staff Assistant, Systems Policy Staff, Justice Management Division, Department of Justice, Washington, DC 20530 (Room 850, WCTR Building).

Dated: May 17, 1995.

Stephen R. Colgate,

Assistant Attorney General for Administration.

[FR Doc. 95–12965 Filed 5–25–95; 8:45 am]

BILLING CODE 4410–05–M

DEPARTMENT OF LABOR

Employment Standards Administration

Wage and Hour Division; Minimum Wages for Federal and Federally Assisted Construction; General Wage Determination Decisions

General wage determination decisions of the Secretary of Labor are issued in accordance with applicable law and are based on the information obtained by the Department of Labor from its study of local wage conditions and data made available from other sources. They specify the basic hourly wage rates and fringe benefits which are determined to be prevailing for the described classes of laborers and mechanics employed on construction projects of a similar character and in the localities specified therein.

The determinations in these decisions of prevailing rates and fringe benefits have been made in accordance with 29 CFR Part 1, by authority of the Secretary of Labor pursuant to the provisions of the Davis-Bacon Act of March 3, 1931, as amended (46 Stat. 1494, as amended, 40 U.S.C. 276a) and of other Federal statutes referred to in 29 CFR part 1, Appendix, as well as such additional statutes as may from time to time be enacted containing provisions for the payment of wages determined to be prevailing by the Secretary of Labor in accordance with the Davis-Bacon Act. The prevailing rates and fringe benefits determined in these decisions shall, in accordance with the provisions of the foregoing statutes, constitute the minimum wages payable on Federal and federally assisted construction projects to laborers and mechanics of the specified classes engaged on contract work of the character and in the localities described therein.

Good cause is hereby found for not utilizing notice and public comment procedure thereon prior to the issuance of these determinations as prescribed in 5 U.S.C. 553 and not providing for delay in the effective date as prescribed in that section, because the necessity to issue

current construction industry wage determinations frequently and in large volume causes procedures to be impractical and contrary to the public interest.

General wage determination decisions, and modifications and supersedeas decisions thereto, contain no expiration dates and are effective from their date of notice in the **Federal Register**, or on the date written notice is received by the agency, whichever is earlier. These decisions are to be used in accordance with the provisions of 29 CFR parts 1 and 5. Accordingly, the applicable decision, together with any modifications issued, must be made a part of every contract for performance of the described work within the geographic area indicated as required by an applicable Federal prevailing wage law and 29 CFR part 5. The wage rates and fringe benefits, notice of which is published herein, and which are contained in the Government Printing Office (GPO) document entitled ''General Wage Determinations Issued Under The Davis-Bacon And Related Acts,'' shall be the minimum paid by contractors and subcontractors to laborers and mechanics.

Any person, organization, or governmental agency having an interest in the rates determined as prevailing is encouraged to submit wage rate and fringe benefit information for consideration by the Department. Further information and self-explanatory forms for the purpose of submitting this data may be obtained by writing to the U.S. Department of Labor, Employment Standards Administration, Wage and Hour Division, Division of Wage Determinations, 200 Constitution Avenue, NW., Room S–3014, Washington, DC 20210.

Withdrawn General Wage Determination Decision

This is to advise all interested parties that the Department of Labor is withdrawing, from the date of this notice, General Wage Determination No. OK950033 dated February 10, 1995.

Agencies with construction projects pending, to which this wage decision would have been applicable, should utilize the project determination procedure by submitting a SF–308. Contracts for which bids have been opened shall not be affected by this notice. Also, consistent with 29 CFR 1.6(c)(2)(i)(A), when the opening of bids is less than ten (10) days from the date of this notice, this action shall be effective unless the agency finds that there is insufficient time to notify bidders of the change and the finding is documented in the contract file.

Modification to General Wage Determinations Decisions

The number of decisions listed in the Government Printing Office document entitled ''General Wage Determinations Issued Under the Davis-Bacon and Related Acts'' being modified are listed by Volume and State. Dates of publication in the **Federal Register** are in parentheses following the decisions being modified.

Volume I

New York
NY950002 (Feb. 10, 1995)
NY950007 (Feb. 10, 1995)
NY950013 (Feb. 10, 1995)
NY950018 (Feb. 10, 1995)
NY950021 (Feb. 10, 1995)
NY950026 (Feb. 10, 1995)
NY950076 (Feb. 10, 1995)

Volume II

District of Columbia
DC950001 (Feb. 10, 1995)
Maryland
MD950017 (Feb. 10, 1995)
MD950025 (Feb. 10, 1995)
MD950034 (Feb. 10, 1995)
MD950035 (Feb. 10, 1995)
MD950036 (Feb. 10, 1995)
MD950048 (Feb. 10, 1995)
MD950053 (Feb. 10, 1995)
Pennsylvania
PA950014 (Feb. 10, 1995)
Virginia
VA950025 (Feb. 10, 1995)
VA950104 (Feb. 10, 1995)
VA950105 (Feb. 10, 1995)

Volume III

South Carolina
SC950023 (Feb. 10, 1995)

Volume IV

Illinois
IL950018 (Feb. 10, 1995)
Indiana
IN950036 (Feb. 10, 1995)
IN950041 (Feb. 10, 1995)
Michigan
MI950023 (Feb. 10, 1995)
MI950026 (Feb. 10, 1995)
MI950027 (Feb. 10, 1995)
Minnesota
MN950008 (Feb. 10, 1995)

Volume V

Iowa
IA950005 (Feb. 10, 1995)
Oklahoma
OK950027 (Feb. 10, 1995)
OK950030 (Feb. 10, 1995)
OK950032 (Feb. 10, 1995)
OK950035 (Feb. 10, 1995)

Volume VI

Colorado
CO950001 (Feb. 10, 1995)
CO950002 (Feb. 10, 1995)
CO950006 (Feb. 10, 1995)
CO950007 (Feb. 10, 1995)
CO950008 (Feb. 10, 1995)
CO950009 (Feb. 10, 1995)
Nevada
NV950001 (Feb. 10, 1995)

General Wage Determination Publication

General wage determinations issued under the Davis-Bacon and related Acts, including those noted above, may be found in the Government Printing Office (GPO) document entitled ''General Wage Determinations Issued Under The Davis-Bacon and Related Acts''. This publication is available at each of the 50 Regional Government Depository Libraries and many of the 1,400 Government Depository Libraries across the country.

The general wage determinations issued under the Davis-Bacon and related Acts are available electronically by subscription to the FedWorld Bulletin Board System of the National Technical Information Service (NTIS) of the U.S.

Hard-copy subscriptions may be purchased from: Superintendent of Documents, U.S. Government Printing Office, Washington, DC 20402, (202) 512–1800.

When ordering hard-copy subscription(s), be sure to specify the State(s) of interest, since subscriptions may be ordered for any or all of the six separate volumes, arranged by State. Subscriptions include an annual edition (issued in January or February) which included all current general wage determinations for the States covered by each volume. Throughout the remainder of the year, regular weekly updates will be distributed to subscribers.

Signed at Washington, DC this 19th day of May 1995.

Alan L. Moss,

Director, Division of Wage Determination.

[FR Doc. 95–12718 Filed 5–25–95; 8:45 am]

BILLING CODE 4510–27–M

Office of the Secretary

Secretary's Task Force on Excellence in State and Local Government Through Labor-Management Cooperation: Meeting

AGENCY: Office of the Secretary, Labor.

ACTION: Notice of public meeting.

SUMMARY: The Secretary's Task Force on Excellence in State and Local Government Through Labor-Management Cooperation was established in accordance with the

Federal Advisory Committee Act (FACA) (Pub. L. 82–463). Pursuant to Section 10(a) of FACA, this is to announce that the Task Force will meet at the time and place shown below.

TIME AND PLACE: The meeting will be held on Thursday, June 22, 1995, from approximately 9 a.m. to 4 p.m. and on Friday, June 23, 1995, from approximately 9 a.m. to 3 p.m. in Conference Room N–3437 B–D in the Department of Labor, 200 Constitution Avenue, NW, Washington, DC.

Agenda

At this meeting, the Task Force intends to hear testimony on and discuss the following topics, among others: (1) Effects on finance, budget, and pension trends on labor-management-cooperation and (2) experiences of state or local elected officials in implementing workplace changes through labor-management cooperation.

Public Participation

The meeting will be open to the pubic. Seating will be available on a first-come, first-served basis. Individuals with disabilities wishing to attend should contact the Task Force if special accommodations are necessary. Individuals or organizations wishing to submit written statements should send 20 copies on or before June 14 to Mr. Charles A. Richards, Designated Federal Official, Secretary of Labor's Task Force on Excellence in State and Local Government through Labor-Management Cooperation, U.S. Department of labor, 200 Constitution Avenue, NW, Room S–2203, Washington, DC 20210. These statements will be thoroughly reviewed and become part of the record.

For the purposes of this meeting, the Task Force is primarily interested in statements that address the topics mentioned above under the heading ''Agenda.'' However, the Task Force continues to welcome submissions that address the questions in the mission statement and the following eight general areas: (1) Finding Models, Ingredients, and Barriers to Service Excellence and Labor-Management Cooperation and, as the following relate to promotion workplace cooperation and excellence; (2) Bargaining and Related Institutions and Practices; (3) Conflict Resolution Skills, Practices, and Institutions; (4) Legal and Regulatory Issues; (5) Effects of Civil Service; (6) Ensuring a High-Performance Work Environment; (7) Political and Electoral Considerations and Relationships; and (8) Financial Background, Financial Security, and Budget Systems.

FOR FURTHER INFORMATION CONTACT: Mr. Charles A. Richards, Designated Federal Official, Secretary of Labor's Task Force on Excellence in State and Local Government through Labor-Management Cooperation, U.S. Department of labor, Room S–2203, Washington, DC 20210, (202) 219–6231.

Signed at Washington, DC, this 22nd day of May 1995.

Robert B. Reich,

Secretary of Labor.

[FR Doc. 95–12961 Filed 5–25–95; 8:45 am]

BILLING CODE 4510–86–M

NUCLEAR REGULATORY COMMISSION

[Docket Nos. 50–334 and 50–412]

Beaver Valley Power Station, Unit Nos. 1 and 2; Environmental Assessment and Finding of No Significant Impact

In the matter of Duquesne Light Company; Ohio Edison Company; Pennsylvania Power Company; The Cleveland Electric Illuminating Company; and The Toledo Edison Company.

The U.S. Nuclear Regulatory Commission (the Commission) is considering issuance of an exemption from certain requirements of its regulations to Facility Operating Licenses No. DPR–66 and NPF–73, issued to Duquesne Light Company, et al. (the licensee), for operation of the Beaver Valley Power Station, Unit Nos. 1 and 2, located in Beaver County, Pennsylvania.

Environmental Assessment

Identification of the Proposed Action

The proposed action is in accordance with the licensee's application dated February 8, 1995, for exemption from certain requirements of 10 CFR 73.55, ''Requirements for physical protection of licensed activities in nuclear power reactors against radiological sabotage.'' The exemption would allow implementation of a hand geometry biometric system for site access control such that combined picture badges/keycards for certain non-employees can be taken offsite.

The Need for the Proposed Action

Pursuant to 10 CFR 73.55, paragraph (a), the licensee shall establish and maintain an onsite physical protection system and security organization.

Paragraph (1) of 10 CFR 73.55(d), ''Access Requirements,'' specifies that ''licensee shall control all points of personnel and vehicle access into a protected area.'' Paragraph (5) of 10 CFR 73.55(d) specifies that ''A numbered picture badge identification system shall be used for all individuals who are authorized access to protected areas without escort.'' Paragraph (5) of 10 CFR 73.55(d) also states that an individual not employed by the licensee (i.e., contractors) may be authorized access to protected areas without escort provided the individual ''receives a picture badge upon entrance into the protected area which must be returned upon exit from the protected area * * *.''

Currently, employee and contractor combined identification badges/keycards are issued and retrieved on the occasion of each entry to and exit from the protected areas of the Beaver Valley Power Station site. Station security personnel are required to maintain control of the badges while the individuals are offsite. This practice has been in effect at the Beaver Valley Power Station since the operating license was issued. Security personnel retain each identification badge/keycard, when not in use by the authorized individual, within appropriately designed storage receptacles inside a bullet-resistance enclosure. An individual who meets the access authorization requirements is issued an individual picture identification card/keycard which allows entry into preauthorized areas of the station. While entering the plant in the present configuration, an authorized individual is ''screened'' by the required detection equipment and by the issuing security officer. Having received the badge/keycard, the individual proceeds to the access portal, inserts the badge/keycard into the card reader and passes through the turnstile which unlocks if the badge/keycard is valid.

This present procedure is labor intensive since security personnel are required to verify badge/keycard issuance, ensure badge/keycard retrieval, and maintain the badges/keycards in orderly storage until the next entry into the protected area. The regulations permit employees to remove their badges from the site, but an exemption from 10 CFR 73.55(d)(5) is required to permit contractors to take their badges offsite instead of returning them when exiting the site.

Environmental Impacts of the Proposed Action

The Commission has completed its evaluation of the licensee's application. Under the proposed system, all individuals authorized to gain unescorted access will have the physical characteristics of their hand (hand geometry) recorded with their badge/keycard number. Since the hand geometry is unique to each individual

and its application in the entry screening function would preclude unauthorized use of a badge/keycard, the requested exemption would allow employees and contractors to keep their badges at the time of exiting the protected area. The process of verifying badge/keycard issuance, ensuring badge/keycard retrieval, and maintaining badges/keycards, could be eliminated while the balance of the access procedure would remain intact. Firearm, explosive, and metal detection equipment and provisions for conducting searches will remain as well. The security officer responsible for the last access control function (controlling admission to the protected area) will also remain isolated within a bullet-resistant structure in order to assure his or her ability to respond or to summon assistance.

Use of a hand geometry biometrics system exceeds the present verification methodology's capability to discern an individual's identity. Unlike the combined photograph identification badge/keycard, hand geometry is nontransferable. During the initial access authorization or registration process, hand measurements are recorded and the template is stored for subsequent use in the identity verification process required for entry into the protected area. Authorized individuals insert their badge/keycard into the card reader and the biometrics system records an image of the hand geometry. The unique features of the newly recorded image are then compared to the template previously stored in the database. Access is ultimately granted based on the degree to which the characteristics of the image match those of the ''signature'' template.

Since both the badge/keycard and hand geometry would be necessary for access into the protected area, the proposed system would provide for a positive verification process. Potential loss of a badge/keycard by an individual, as a result of taking the badge offsite, would not enable an unauthorized entry into protected areas.

The access process will continue to be under the observation of security personnel. The system of identification badges/keycards will continue to be used for all individuals who are authorized access to protected areas without escorts. Badges/keycards will continue to be displayed by all individuals while inside the protected area. Addition of a hand geometry biometrics system will provide a significant contribution to effective implementation of the security plan at the site.

The change will not increase the probability or consequences of accidents, no changes are being made in the types of any effluents that may be released offsite, and there is no significant increase in the allowable individual or cumulative occupational radiation exposure. Accordingly, the Commission concludes that there are no significant radiological environmental impacts associated with the proposed action.

With regard to potential nonradiological impacts, the proposed action does involve features located entirely within the restricted area as defined in 10 CFR Part 20. It does not effect nonradiological plant effluents and has no other environmental impact. Accordingly, the Commission concludes that there are no significant nonradiological environmental impacts associated with the proposed action.

Alternatives to the Proposed Action

Since the Commission has concluded there is no measurable environmental impact associated with the proposed action, any alternatives with equal or greater environmental impact need not be evaluated. As an alternative to the proposed action, the staff considered denial of the proposed action. Denial of the application would result in no change in current environmental impacts. The environmental impacts of the proposed action and the alternative action are similar.

Alternative Use of Resources

This action does not involve the use of any resources not previously considered in the Final Environmental Statements for the Beaver Valley Power Station Units Nos. 1 and 2.

Agencies and Persons Consulted

In accordance with its stated policy, on April 18, 1995, the staff consulted with the Pennsylvania State official, Robert C. Maiers of the Bureau of Radiation Protection. Department of Environmental Resources, regarding the environmental impact of the proposed action. The State official had no comments.

Finding of No Significant Impact

Based upon the environmental assessment, the Commission concludes that the proposed action will not have a significant effect on the quality of the human environment. Accordingly, the Commission has determined not to prepare an environmental impact statement for the proposed action.

For further details with respect to the proposed action, see the licensee's letter dated February 8, 1995, which is available for public inspection at the Commission's Public Document Room, The Gelman Building, 2120 L Street, NW., Washington, DC, and at the local public document room located at the B.F. Jones Memorial Library, 663 Franklin Avenue, Aliquippa, Pennsylvania 15001.

Dated at Rockville, Maryland, this 22nd day of May 1995.

For the Nuclear Regulatory Commission.

John F. Stolz,

Director, Project Directorate I–2, Division of Reactor Projects–I/II, Office of Nuclear Reactor Regulation.

[FR Doc. 95–12970 Filed 5–25–95; 8:45 am]

BILLING CODE 7590–01–M

Supplement 1 to Revision 1 to Generic Letter 92–01, ''Reactor Vessel Structural Integrity''; Issued

AGENCY: Nuclear Regulatory Commission.

ACTION: Notice of issuance.

SUMMARY: The Nuclear Regulatory Commission (NRC) issued Supplement 1 to Revision 1 to Generic Letter 92–01, ''Reactor Vessel Structural Integrity,'' on May 19, 1995. This generic letter supplement will be available in the NRC Public Document Room under accession number 9505090312. This generic letter supplement was issued on an expedited basis in accordance with NRC procedures. This generic letter supplement is discussed in Commission information paper SECY–95–118 which will also be available in the NRC Public Document Room.

DATES: The generic letter supplement was issued on May 19, 1995.

ADDRESSES: Not applicable.

FOR FURTHER INFORMATION CONTACT: Edwin M. Hackett, (301) 415–2751.

SUPPLEMENTARY INFORMATION: Not applicable.

Dated at Rockville, Maryland, this 19th day of May 1995.

For the Nuclear Regulatory Commission

Brian K. Grimes,

Director, Division of Project Support, Office of Nuclear Reactor Regulation.

[FR Doc. 95–12969 Filed 5–25–95; 8:45 am]

BILLING CODE 7590–01–M

Uranium Recovery Facilities: Availability of Staff Technical Position on Effluent Disposal at Licensed Uranium Recovery Facilities

AGENCY: Nuclear Regulatory Commission.

ACTION: Notice of availability.

SUMMARY: The Nuclear Regulatory Commission is announcing the availability of ''Staff Technical Position on Effluent Disposal at License Uranium Recovery Facilities.'' This Staff Technical Position (STP) is a NRC staff guidance document that provides guidance and discusses the technical and regulatory basis for review and evaluation of proposals for disposal of liquid waste at licensed uranium recovery facilities, including conventional mills and in situ leach facilities. The STP is primarily intended to guide NRC staff reviews of site-specific proposals for disposal of liquid waste, but it can also be used by licensees and applicants for preparation of such proposals.

ADDRESSES: Copies of the STP on effluent disposal at licensed uranium recovery facilities may be requested by writing to: Dr. John H. Austin, Chief, Performance Assessment and Hydrology Branch, Division of Waste Management, Office of Nuclear Material Safety and Safeguards, Mailstop 7–D–13 TWFN, U.S. Nuclear Regulatory Commission, Washington DC 20555, or by calling (301) 415–7252.

FOR FURTHER INFORMATION CONTACT: Dr. Latif S. Hamdan, Performance Assessment and Hydrology Branch, Division of Waste Management, Office of Nuclear Material Safety and Safeguards, Mailstop 7–D–13 TWFN, U.S. Nuclear Regulatory Commission, Washington DC 20555. Telephone: (301) 415–6639.

SUPPLEMENTARY INFORMATION: Persons interested in commenting on the STP on effluent disposal at licensed uranium recovery facilities may provide written comments to Chief, Performance Assessment and Hydrology Branch, Mail Stop TWFN 7–D–13, Division of Waste Management, Office of Nuclear Material Safety and Safeguards, U.S. Nuclear Regulatory Commission, Washington, DC 20555. Comments received will be considered in any future revisions of the STP. There is no date set for expiration of the comment period.

Dated at Rockville, Maryland, this 19th day of May, 1995.

For the Nuclear Regulatory Commission.

John H. Austin,

Chief, Performance Assessment and Hydrology Branch, Division of Waste Management, Office of Nuclear Material Safety and Safeguards.

[FR Doc. 95–12971 Filed 5–25–95; 8:45 am]

BILLING CODE 7590–01–M

OFFICE OF PERSONNEL MANAGEMENT

The National Partnership Council; Meeting

AGENCY: Office of Personnel Management.

ACTION: Notice of meeting.

SUMMARY: The Office of Personnel Management (OPM) announces the next meeting of the National Partnership Council (the Council). Notice of this meeting is required under the Federal Advisory Committee Act.

TIME AND PLACE: The Council will meet June 13, 1995, from 1:00 to 3:00 p.m., in the Strom Auditorium of the Richard B. Russell Federal Building, 75 Spring Street, SW., Atlanta, GA 30303.

TYPE OF MEETING: This meeting will be open to the public. Seating will be available on a first-come, first-served basis. Handicapped individuals wishing to attend should contact OPM at the number shown below to obtain appropriate accommodations.

POINT OF CONTACT: Douglas K. Walker, National Partnership Council, Executive Secretariat, Office of Personnel Management, Theodore Roosevelt Building, 1900 E Street, NW., Room 5315, Washington, DC 20415–0001, (202) 606–1000.

SUPPLEMENTARY INFORMATION: The Council is holding meetings outside the Washington, DC Metropolitan area in an effort to get the labor-management partnership message out to as many people as possible. This will be an interactive meeting. There will be presentations on partnership experiences followed by an audience participation segment. Persons seated in the audience will be invited to ask questions from the floor. The meeting will end with a discussion of various Council workplan items.

PUBLIC PARTICIPATION: We invite interested persons and organizations to submit written comments or recommendations. Mail or deliver your comments or recommendations to Mr. Douglas K. Walker at the address shown above. Comments should be received by June 9, in order to be considered at the June 13, meeting.

Office of Personnel Management.

James B. King,

Director.

[FR Doc. 95–12939 Filed 5–25–95; 8:45 am]

BILLING CODE 6325–01–M

SECURITIES AND EXCHANGE COMMISSION

[Release No. 33–7170; 34–35750; IC–21086]

Securities Transactions Settlement

AGENCY: Securities and Exchange Commission.

ACTION: Grant of exemption.

SUMMARY: The Securities and Exchange Commission (''Commission'' or ''SEC'') is exempting certain transactions in foreign securities from Rule 15c6–1 under the Securities Exchange Act of 1934, which requires settlement of transactions in three days.

EFFECTIVE DATE: The exemption from rule 15c6–1 for certain transactions in foreign securities will be effective on June 7, 1995.

FOR FURTHER INFORMATION CONTACT: Jerry W. Carpenter, Assistant Director, or Christine Sibille, Senior Counsel, at 202/942–4187, Office of Securities Processing Regulation, Division of Market Regulation, Securities and Exchange Commission, 450 Fifth Street, NW., Mail Stop 5–1, Washington, DC 20549.

SUPPLEMENTARY INFORMATION: On October 6, 1993, the Commission adopted Rule 15c6–1 [1] which establishes three business days after the trade date (''T+3'') instead of five business days (''T+5'') as the standard settlement time frame for most broker-dealer securities transactions. Rule 15c6–1 becomes effective June 7, 1995.[2]

Rule 15c6–1 covers all securities other than exempted securities (including government securities and municipal securities),[3] commercial paper, bankers' acceptances, or commercial bills. In addition, the rule contains specific exemptions for sales of unlisted limited partnership interests and for sales of securities pursuant to a firm commitment offering.[4]

As adopted, Rule 15c6–1 covers purchases and sales of securities between U.S. broker-dealers and their

[1] 17 CFR 240.15c6–1 (1994).

[2] As adopted, Rule 15c6–1 was to become effective June 1, 1995. In order to provide for an efficient conversion, the Commission changed the effective date to June 7, 1995. Securities Exchange Act Release No. 34952 (November 9, 1994), 59 FR 59137.

[3] The Commission approved a proposed rule change of the Municipal Securities Rulemaking Board that requires transactions in municipal securities to settle by T+3. Securities Exchange Act Release No. 35427 (February 28, 1995), 60 FR 12798.

[4] On May 10, 1995, the Commission adopted amendments to Rule 15c6–1 that eliminated the exemption for firm commitment offerings. Securities Exchange Act Release No. 35705 (May 10, 1995), 60 FR 26604.

customers even if these securities do not generally trade in the United States. This may create difficulties for broker-dealers that purchase or sell securities in foreign markets to satisfy their obligations to their customers for transactions in the United States because the purchase or sale executed in the foreign market will settle in accordance with the local market's settlement period. If this period is longer than three business days, the broker-dealer will be unable to meet its obligations to its customer in the United States by T+3.

The Securities Industry Association (''SIA'') has requested that the Commission permit broker-dealers to settle trades of certain foreign securities executed in a foreign market in accordance with the standard settlement cycle in such foreign market.[5] According to the SIA, customers with delivery vs. payment (''DVP'') accounts expect to settle transactions in accordance with local settlement time frames. With respect to all other customers, the SIA states, ''The general practice with these accounts is that, once settlement under local rules is agreed as the norm, the trades are automatically booked and confirmed for settlement on the foreign market settlement date.''

The Commission notes that many securities that are commonly considered to be foreign securities are settled in the United States because the securities are eligible for deposit at a registered securities depository or there are transfer agents for the securities in the U.S. (*i.e.*, transfer or delivery facilities exist for the securities in the U.S.).[6] Even if there are transfer or delivery facilities in the U.S. available for a security, however, a broker-dealer may be required to purchase and settle the security in a foreign market because there is limited trading in the U.S. in such security.

The Commission believes that it is appropriate to provide a limited exemption for securities that do not generally trade in the U.S. from the scope of Rule 15c6–1. Under the exemption, all transactions in securities that do not have transfer or delivery facilities in the U.S. will be exempt from the scope of Rule 15c6–1.[7] Furthermore, if less than 10% of the annual trading volume in a security that has U.S. transfer or delivery facilities occurs in the U.S., transactions in such security will be exempted from Rule 15c6–1 [8] unless the parties clearly intend T+3 settlement to apply. If a foreign security is not exempted from Rule 15c6–1 under either of these two exemptions, the parties may arrange to settle the transaction in more than three business days if the parties expressly agree to the alternate settlement time frame at the time of the transaction pursuant to paragraph (a) of Rule 15c6–1.

The Commission also is granting an exemption to make clear that Rule 15c6–1 does not apply to transactions that occur outside the United States. For example, if a U.S. broker-dealer were to execute a trade on a foreign exchange with a U.S. or foreign broker-dealer, the contract will not be subject to the rule.[9]

Nevertheless, if the parties intend a transaction to be executed on a registered securities exchange or through a registered securities association, the transaction will be subject to both the rules of the exchange or association and Rule 16c6–1.[10] Further, such transaction will still be subject to the provisions in Regulation T [11] for obtaining customer payment for purchases of foreign securities.[12]

It is hereby ordered that a contract for the purchase or sale of securities for which there is no transfer agent in the United States and which is not eligible for deposit at a registered clearing agency (collectively referred to as ''transfer or delivery facilities'') shall be exempt from the requirements of Rule 15c6–1.

It is further ordered that if there exists transfer or delivery facilities both in the United States and outside of the United States for a security, a contract for the purchase or sale of such security shall be exempt from the requirements of Rule 15c6–1 if annual trading in such securities in the United States constitutes less than 10% of the aggregate worldwide trading volume.

It is further ordered that a contract executed by a United States broker-dealer outside of the United States for the purchase or sale of securities the terms of which provide for delivery or payment outside of the United States shall be exempt from the requirements of Rule 15c6–1.

This order does not apply to any contract or class of contracts for the purchase or sale of a security which is intended by the parties to be executed by the broker-dealer on a registered securities exchange or through the facilities of a registered securities associations subject to the rules of a national securities exchange or registered securities association and settled through the facilities of a registered clearing organization.

These exemptions are subject to modification or revocation at any time the Commission determines that such modification or revocation is consistent with the public interest or the protection of investors.

Dated: May 22, 1995.

[5] Letter from Michael T. Reddy, Adviser to the Clearance and Settlement Committee, SIA, to Jonathan Kallman, Associate Director, Commission (October 17, 1994).

[6] For example, a security listed on an exchange or quoted on Nasdaq must have transfer facilities in the U.S. Under Section 6 of the New York Stock Exchange's (''NYSE'') Listed Company Manual, an issuer listed on the exchange must provide facilities in New York City for the transfer of securities, and such facilities must complete routine transfers within 48 hours. Under Schedule D, Part V, Section 7 of the National Association of Securities Dealers' (''NASD'') By-laws, all market makers must use the facilities of a registered clearing corporation to clear trades in securities quoted on the Nasdaq Stock Market or on the OTC Bulletin Board.

[7] For purposes of this order, a depository receipt will be considered a separate security from the underlying security. Thus, if there are no transfer facilities in the U.S. for a foreign security but there are transfer facilities for a depository receipt based on such foreign security, only the foreign security and not the depositary receipt will be exempt from Rule 15c6–1. A depositary receipt is a security which represents an ownership interest in a specified number of securities that have been deposited with a depositary. Such securities are sometimes called American Depositary Receipts or Global Depositary Receipts.

[8] Broker-dealers may calculate the annual trading volume once a year based on publicly available figures and rely on such calculation for the following year. Most foreign exchanges provide data on trading volume in securities listed on such exchanges.

[9] It is important to note that this exemption only applies to the contract between the U.S. broker-dealer and the foreign broker-dealer. If the U.S. broker-dealer is executing the trade on the foreign exchange to satisfy its obligations to a U.S. customer, the contract with the U.S. customer is still subject to T+3 settlement unless that contract also is exempted. Such contract may come under the exemptions discussed above or may have an alternate settlement cycle by agreement of the two parties.

[10] Effective June 7, 1995, the rules of all registered securities exchanges and the NASD will establish three business days as the settlement cycle for all transactions executed as ''regular way.''

[11] 12 CFR 220.1 *et seq.*

[12] Under Section 220.8(b) of Regulation T, a creditor (*i.e.*, a broker-dealer) generally must obtain full cash payment for customer purchases in a cash account within one payment period of the date any security was purchased. A ''payment period'' is defined as the number of days in the standard securities settlement cycle in the United States, as defined in Rule 15c6–1, plus two business days. Until June 1, 1995, payment period means seven business days. 12 CFR 220.2(w). However, in the case of a purchase of a foreign security, a creditor must obtain full cash payment within one payment period of the date of purchase or by the date on which settlement is required to occur by the rules of the foreign securities market provided that this period does not exceed the maximum time permitted by Regulation T for delivery against payment transactions (*i.e.*, thrity-five days).

By the Commission.

Jonathan G. Katz,

Secretary.

[FR Doc. 95–12986 Filed 5–25–95; 8:45 am]

BILLING CODE 8010–01–M

[Release No. 34–35740 ; File No. SR–PSE–95–14]

Self-Regulatory Organizations; The Pacific Stock Exchange, Incorporated; Notice of Filing of Proposed Rule Change Regarding Depository Eligibility Requirements

May 19, 1995.

Pursuant to Section 19(b)(1) of the Securities Exchange Act of 1934 (''Act''),[1] notice is hereby given that on May 15, 1995, The Pacific Stock Exchange, Incorporated (''PSE'') filed with the Securities and Exchange Commission (''Commission'') the proposed rule change as described in Items I, II, and III below, which items have been prepared primarily by PSE. The Commission is publishing this notice to solicit comments from interested persons.

I. Self-Regulatory Organization's Statement of the Terms of Substance of the Proposed Rule Change

PSE proposes to adopt a rule which will set forth depository eligibility requirements for issuers that apply to list their securities on PSE.

II. Self-Regulatory Organization's Statement of the Purpose of, and Statutory Basis for, the Proposed Rule Change

In its filing with the Commission, the self-regulatory organization included statements concerning the purpose of and basis for the proposed rule change and discussed any comments it received on the proposed rule change. The text of these statements may be examined at the places specified in Item IV below. The self-regulatory organization has prepared summaries, set forth in sections (A), (B), and (C) below, of the most significant aspects of such statements.[2]

Self-Regultory Organization's Statement of the Purpose of, and Statutory Basis for, the Proposed Rule Change

Under the proposed rule change, PSE will adopt a uniform depository eligibility rule for issuers that desire to list their securities on PSE. The uniform rule has been developed by the Legal and Regulatory Subgroup of the U.S. Working Committee of the Group of Thirty in coordination with each of the national securities exchanges and the National Association of Securities Dealers (''NASD''). It is anticipated that each national securities exchange and the NASD will file rule changes proposing adoption of depository eligibility standards substantially similar to PSE's proposed rule and will seek to make such changes effective contemporaneously with the effective date of the transition from a five-day (''T+5'') to a three-day (''T+3'') settlement cycle. The transition is set to occur June 7, 1995.[3]

The proposed rule change will require domestic issuers to represent to PSE before issues of securities are listed that the CUSIP numbers identifying the securities have been included in the file of eligible issues maintained by a securities depository registered as a clearing agency under Section 17A of the Act.[4] This requirement will not apply to a security if the terms of such security cannot be reasonably modified to meet the criteria for depository eligibility at all securities depositories. In addition, the rule will not apply to American Depository Receipts for securities of a foreign issuer.

The proposed rule change sets forth additional requirements that must be met before a security will be deemed to be ''depository eligible'' within the meaning of PSE Rule 5.9(c)(4). The proposed rule specifies different requirements for depository eligibility depending upon whether a new issue is distributed by an underwriting syndicate before or after the date a securities depository system is available for monitoring repurchases of the distributed shares by syndicate members (''flipping tracking system'').

Currently, a flipping tracking system is being developed that will include a securities depository service that (i) can be activated upon the request of the managing underwriter for a period of time that the managing underwriter specifies, (ii) in certain circumstances, will require the delivering participant to provide to the depository information sufficient to identify the seller of such shares as a precondition to the processing of book-entry delivery instructions for distributed shares, and (iii) will report to the managing underwriter the identity of any other syndicate member or selling group member whose customer(s) sold distributed shares (but will not report to the managing underwriter the identity of such customer[s]) and, in certain circumstances, will report to such syndicate member or selling group member the identity of such customer(s). Prior to the availability of a flipping tracking system, the managing underwriter may delay the date a security is deemed ''depository eligible'' for up to three months after trading has commenced in the security. After the availability of a flipping tracking system, a new issue will be deemed to be depository eligible upon commencement of trading on PSE.

The proposed rule change is consistent with Section 6(b)(5) of the Act[5] in that it is designed to foster cooperation and coordination with persons engaged in regulating, clearing, settling, processing information with respect to, and facilitating transactions in securities and to remove impediments to and perfect the mechanism of a free and open market and a national market system.

(B) Self-Regulatory Organization's Statement on Burden on Competition

PSE does not believe that the proposed rule change will impose any burden on competition that is not necessary or appropriate in furtherance of the purposes of the Act.

(C) Self-Regulatory Organization's Statement on Comments on the Proposed Rule Change Received from Members, Participants or Others

Written comments on the proposed rule change were neither solicited nor received.

III. Date of Effectiveness of the Proposed Rule Change and Timing for Commission Action

Within thirty-five days of the date of publication of this notice in the **Federal Register** or within such longer period (i) as the Commission may designate up to ninety days of such date if it finds such longer period to be appropriate and publishes its reasons for so finding or (ii) as to which PSE consents, the Commission will:

(a) By order approve such proposed rule change or

(b) Institute proceedings to determine whether the proposed rule change should be disapproved.

PSE has requested accelerated effectiveness of the proposed rule change in order that the rule can become effective on June 7, 1995.[6]

---

[1] 15 U.S.C. § 78s(b)(1) (1988).

[2] The Commission has modified the language in these sections.

[3] Securities Exchange Act Releases Nos. 33023 (October 6, 1993), 58 FR 52891 (adoption of Rule 15c6–1) and 34952 (November 9, 1994), 59 FR 59137 (change of effective date of Rule 15c6–1 from June 1, 1995 to June 7, 1995).

[4] 15 U.S.C. § 78q–1 (1988).

[5] 15 U.S.C. § 78f(b)(5) (1988).

[6] *Supra* note 3 and accompanying text.

IV. Solicitation of Comments

Interested persons are invited to submit written data, views, and arguments concerning the foregoing. Persons making written submission should file six copies thereof with the Secretary, Securities and Exchange Commission, 450 Fifth Street, NW., Washington DC 20549. Copies of the submissions, all subsequent amendments, all written statements with respect to the proposed rule change that are filed with the Commission, and all written communications relating to the proposed rule change between the Commission and any person, other than those that may be withheld from the public in accordance with the provisions of 5 U.S.C. § 552, will be available for inspection and copying in the Commission's Public Reference Section, 450 5th Street, NW., Washington, DC 20549. Copies of such filings will also be available for inspection and copying at the principal office of PSE. All submissions should refer to file number SR–PSE–95–14 and should be submitted by June 15, 1995.

For the Commission by the Division of Market Regulation, pursuant to delegated authority.[7]

Jonathan G. Katz,

Secretary.

[FR Doc. 95–12925 Filed 5–25–95; 8:45 am]

BILLING CODE 8010–01–M

[7] 17 CFR 200.30–3(a)(12) (1994).

[Release No. 34–35751; File No. SR–NASD–94–62]

Self-Regulatory Organizations; Order Approving Proposed Rule Change by National Association of Securities Dealers, Inc. Relating to Limit Order Protection and Nasdaq

May 22, 1995.

On November 22, 1994, the National Association of Securities Dealers, Inc. (''NASD'' or ''Association'') filed a proposed rule change with the Securities and Exchange Commission (''SEC'' or ''Commission'')[1] pursuant to Section 19(b)(1) of the Securities Exchange Act of 1934 (''Act''),[2] and Rule 19b–4 thereunder.[3] The proposed rule change amends the NASD's Interpretation to Article III, Section 1 of the NASD Rules of Fair Practice (''Interpretation'')[4] to prohibit a member firm that accepts and holds an unexecuted limit order from its own customer or from a customer of another member in a Nasdaq security from trading ahead of the customer's limit order—that is to trade the subject security for its own market-making account at prices that would satisfy the customer's limit order—unless it also executes that limit order.

Notice of the proposed rule change, together with the substance of the proposal as initially filed, was provided by issuance of a Commission release (Securities Exchange Act Release No. 35122, Dec. 20, 1994) and by publication in the **Federal Register** (59 FR 66389, Dec. 23, 1994, ''Release 34–35122''). Two comment letters were received.[5]

On February 15, 1995, the NASD filed Amendment No. 1 with the Commission. Amendment No. 1 clarified that the ''terms and conditions'' exception to the Interpretation applies only to limit orders from institutional accounts, as defined in Article III, Section 21(c)(4) of the NASD Rules of Fair Practice,[6] whether such limit orders originate with a firm's own customers or are sent to it for execution by another member firm.

Notice of the proposed rule change, as amended, together with the substance of the proposal, was provided by issuance of a Commission release (Securities Exchange Act Release No. 35391, Feb. 16, 1995) and by publication in the **Federal Register** (60 FR 9878, Feb. 22, 1995, ''Release 34–35391''). No comment letters were received in response to Amendment No. 1.

On March 7, 1995, the NASD filed Amendment No. 2 with the Commission. Amendment No. 2 amended the proposed rule change to extend the ''terms and conditions'' exception to the Interpretation to limit orders for 10,000 shares or more, unless such orders are less than $100,000 in value, as well as to limit orders from institutional accounts.

Notice of the proposed rule change, as amended, together with the substance of the proposal, was provided by issuance of a Commission release (Securities Exchange Act Release No. 35454, Mar. 8, 1995) and by publication in the **Federal Register** (60 FR 13199, Mar. 10, 1995, ''Release 34–35454''). One comment letter was received in response to Amendment No. 2.[7] This order approves the proposed rule change.

I. Introduction and Background

Last year, the NASD submitted to the Commission a proposed Interpretation to its Rules of Fair Practice to prohibit member firms from trading ahead of their customers' limit orders in their market making capacity.[8] The Commission approved the NASD Interpretation on June 29, 1994, but expressed concern that the prohibition did not extent to trading ahead of limit orders of other firm's customers that have been sent to the market maker for execution.[9] In fact, the Commission's Division of Market Regulation, in its Market 2000 Study, previously had examined this practice and recommended that a ban apply to trading of all customer limit orders, not just those of a firm's own customer.[10] The Study noted that the adverse effects of trading ahead exist whether the customer's order is handled by the customer's firm or by another market maker.[11]

Upon Commission approval the NASD Interpretation, the NASD convened a special task force (''Task Force'') to study the potential effect of expanded limit order protection on market liquidity and market maker capital commitment and to report to the NASD Board of Directors in September 1994. At the time, the Commission

[1] On February 15, 1995, the NASD filed Amendment No. 1 with the Commission on March 7, 1995 the NASD filed Amendment No. 2 with the Commission. *See infra* notes 6–7 and accompanying text.

[2] 15 U.S.C. 78s(b)(1).

[3] 17 CFR 240.19b–4.

[4] *NASD Manual*, Rules of Fair Practice, Art. III, Sec. 1 (CCH) ¶ 2151.07.

[5] *See* Letter from James T. Halverson, Esq., Shearman & Sterling, on behalf of Herzog, Heine, Geduld, Inc. (''Herzog'') to Jonathan G. Katz, Secretary, SEC, dated January 12, 1995 (''January Herzog Letter''); and Letter from James F. Duffy, Executive Vice President and General Counsel, Legal & Regulatory Policy, American Stock Exchange (''Amex'') to Jonathan G. Klatz, Secretary SEC, dated January 18, 1995 (''Amex Letter'').

[6] *NASD Manual*, Rules of Fair Practice, Art. III, Sec. 21 (CCH) ¶ 2171.

[7] *See* Letter from James T. Halverson, Esq., Shearman & Sterling, on behalf of Herzog, to Jonathan G. Katz, Secretary, SEC, dated March 27, 1995 (''March Herzog Letter'') (the January Herzog Letter and the March Herzog Letter are referred to collectively as ''Herzog Letters'').

[8] Securities Exchange Act Release No. 33697 (March 1, 1994), 59 FR 10842 (March 8, 1994).

The Commission first addressed the issue of customer limit order protection in the Nasdaq market in the co-called *Manning* decision in 1988. In that decision, the Commission affirmed, based on principles of agency law, an NASD determination that it is inconsistent with just and equitable principles of trade for a market maker to trade ahead of a customer limit order unless the customers is first informed of the firm's limit order policy. *See In re E.F. Hutton & Co.* (the so-called ''*Manning* decision''), Securities Exchange Act Release No. 25887 (July 6, 1988), 41 SEC Doc. 473, appeal filed *sub nom Hutton & Co. Inc.* v. *SEC*, Dec. No. 88–1649 (D.C. Cir. Sept. 2, 1988), (Stipulation of Dismissal Filed, Jan. 11, 1989).

[9] Securities Exchange Act Release No. 34279 (June 29, 1994), 59 FR 34883 (July 7, 1994) (''Release 34–34279'').

[10] Division of Market Regulation, SEC, Market 2000: An Examination of Current Equity Market Developments (''Market 2000 Study''), V–8 (1994).

[11] *Id.*

stated that while such a study could be helpful to future consideration of this issue, the Commission believed that member-to-member trades raise significant concerns that should be addressed and, if necessary, the Commission would consider instituting its own rulemaking proceeding for that purpose.[12]

The Task Force's report (''Task Force proposal'') recommended that market makers be prohibited from trading ahead to customer limit orders only when such trades occurred at prices superior to the limit order price. The NASD Board of Directors reviewed the Task Force Proposal and proposed for member comment on amended proposal that would have restricted a market maker from trading ahead of a customer limit order at a price equal to or better than the price of the customer limit order if the size of that order was 1,000 shares or less, and from trading to prices better than a customer's limit order if the size of that order was greater than 1,000 shares (''Board Proposal'').[13]

The Commission then published for comment its own proposed rule to prohibit any market maker in Nasdaq National Market securities from trading ahead of the orders of other firms' customers sent to it for execution without regard to the size of the order (''Commission Proposal'').[14] The Commission wished to solicit public comment on alternatives that would provide more extensive limit order protection for public customers than those alternatives that the NASD had then proposed. The Commission also was motivated in part by a desire to solicit comment from public investors and non-NASD members.

II. Description and Scope of the Proposed Rule Change

The rule change we are considering today provides that a member firm cannot accept a customer[15] limit order in a Nasdaq security and continue to trade that security for its own account at prices that would satisfy the customer limit order without filing that order at the limit order price or a price more favorable to the customer. The Interpretation no longer distinguishes between customer limit orders accepted from a member's own customer and customer limit orders sent to it for execution from another member (so-called ''member-to-member'' limit orders). In either situation, such ''trading ahead'' activity would constitute a violation of just and equitable principles of trade.

The NASD requested that the Commission allow the rule change to be implemented on a phased-in-basis. During the time period between the rule's adoption and September 1, 1995, member-to-member limit orders that are greater than 1,000 shares would be protected when the member firm accepting the order trades for its own account at prices that are superior to the limit order price, but not at prices equal to the limit order price. The NASD requested the phase-in-period to provide NASD member firms an opportunity to adjust their order handling procedures for orders over 1,000 shares to the requirements of the Interpretation and to reassess their existing revenue structure.

The rule change also amends the Interpretation by limiting the ''terms and conditions'' exception of the Interpretation to: (a) limit orders from ''institutional accounts'' as that term is defined in Article III, Section 21(c)(4) of the Rules of Fair Practice (''institutional orders''),[16] regardless of whether such institutional orders come from a firm's own customers or are member-to-member limit orders; and (b) limit orders from accounts other than institutional accounts (''retail orders'') if the order is for: (i) 10,000 shares or more; and (ii) has a value of $100,000 or greater (''institution-sized retail orders.'').[17] The rule change does not permit a market maker to accept and hold other retail orders subject to terms and conditions, but does permit a market maker to accept and hold an institutional order subject to terms and conditions even if that order is for less than 10,000 shares or is less than $100,000 in value.

The NASD's rule would continue to permit a market maker to charge its customers or an order entry firm commissions or commission equivalents for handling a limit order, provided those charges previously are disclosed in a clear fashion to the customer, and provided those charges otherwise comply with applicable law.[18] Furthermore, an individual Nasdaq market maker is not obligated to accept any limit orders and is not required to accept limit orders from any particular customer.[19]

III. Summary of Comments

As noted above, the Commission received three comment letters (one commenter two letters) concerning the rule change. These comment letters raised the same types of arguments that were raised in comment letters received on the Commission Proposal.

A. Amex Letter

The Amex Letter addressed three aspects of the rule proposal. First, Amex stated that broker-dealers should be included within the universe of customers entitled to the benefits of limit order protection in the Nasdaq market.[20] Amex reasoned that options market makers, for example, would not be able to hedge their positions in listed options on Nasdaq stocks efficiently if broker-dealers are not protected by the Interpretation.

Second, the Amex Letter requested that the NASD elaborate on the terms and conditions that a market maker is permitted to impose, with a view to guarding against discrimination among customers. As noted above, the rule change was amended after the Commission received the Amex Letter to permit a market maker to negotiate limit order terms and conditions only with respect to institutional orders and institution-sized retail orders, and the rule change specifies that any terms and conditions under which institutional

[12] Release 34–34279, *supra* n. 9.

[13] *See* Special NASD Notice to Members 94–79 (September 23, 1994).

[14] Securities Exchange Act Release No. 34753 (Sept. 29, 1994), 59 FR 50867 (Oct. 6, 1994) (''Release 34–34753'') (proposing 17 CFR 240.15c5–1).

[15] Article II, Section 1(f) of the NASD Rules of Fair Practice defines ''customer'' to exclude a broker or dealer. *See NASD Manual*, Rules of Fair Practice, Art. II, Sec. I (CCH) ¶2101.

[16] An ''institutional account'' is defined as an account of: (1) a bank, savings and loan association, insurance company, or registered investment company; (2) an investment company; (2) an investment adviser registered under Section 203 of the Investment Advisers Act of 1940, 15 U.S.C. § 80b–3; or (3) any other entity (whether a natural person, corporation, partnership, trust, or otherwise) with total assets of at least $50 million. *NASD Manual*, Rules of Fair Practice, Art. III, Sec. 21 (CCH § 2171.

[17] The value of a limit order is calculated by multiplying the price per share specified in that order by the number of shares specified in the order. Thus, the value of a limit order does not include any markup, markdown, commission, commission equivalent, sales credit or other internal credit.

[18] *See* Release 34–35391. Article III, Section 4 of the NASD Rules of Fair Practice states in part that, if a member acts as agent for a customer in any transaction, the customer shall not be charged more than a fair commission or service charge, taking into consideration all relevant circumstances. *See also* NASD Regulatory & Compliance Alert, Vol. 7, no. 4 (December 1993) at 1.

[19] *See* Release 34–34279, *supra* n. 9; Market 2000 Study, *supra* n. 10, at V–8–9.

The Commission notes that Sections 15A(b)(6) and 19(b)(2) of the Act, 15 U.S.C. §§ 78o–3(b)(6), 78s(b)(2), together require, among other things, that a rule change approved by the Commission not be designed to permit unfair discrimination between customers. The Commission expects that the NASD will exercise its oversight authority to ensure that market makers do not refuse to accept certain limit orders in a manner that unfairly discriminates among customers.

[20] Broker-dealers are not deemed to be customers for purposes of the NASD Rules of Fair Practice. *See supra* n. 15.

orders or institution-sized retail orders are accepted must be made clear to customers at the time an order is accepted.

Third, Amex expressed a concern regarding the scope of the limit order protection proposed, stating that the protection afforded by the Interpretation was not an extensive as that provided by exchange markets. Amex recommended that the Interpretation be extended to trigger limit order protection whenever a Nasdaq market making firm executed a trade in any firm account or for any person associated with the firm, rather than limiting the Interpretation to trades executed in a market making account. The Amex Letter also noted that the rule change would entitle a customer only to an execution at the limit price, and not to a better price that a market maker might have obtained by trading ahead. Amex recommended amending the rule change to require market makers to execute a limit order at a price better than the limit price if obtainable, in accordance with principles of agency law.

B. Herzog Letters

Herzog opposed the rule change, asserting that it is wholly unsuited to the nature of the Nasdaq market. Herzog stated that much market making activity on Nasdaq is carried out by wholesale firms, who do not conduct a retail business. The sole source of revenue for these firms is the ''spread'' between their bid and their ask. Herzog noted that wholesale firms must provide the capital to maintain inventories in each stock in which they make markets.

Herzog asserted that if the rule change is approved, market makers would be required to fill limit orders to sell (or buy) stocks at the same price at which they buy (or sell) for their own account. Sophisticated traders would use limit orders to buy and sell stocks at the same price as market makers, without incurring the obligations of market makers. Herzog asserted that market makers would be able to recover their costs only if they widened spreads or increased fees for traders who do not enter limit orders. The impact of the increased fees and widened spreads would fall disproportionately on less sophisticated investors who continue to use market orders and who would continue to pay the spread.

Although Herzog stated that the rule would cause spreads to widen, it also asserted that the rule change would artificially restrict dealers from recovering a competitive ''spread'' in relatively illiquid stock, causing reduced liquidity for those stocks. This, in turn, would disproportionately harm small issuers. Herzog also predicted reduced liquidity for more liquid stocks, because dealers would be less willing to commit capital when institutions wish to move blocks of stock that the market cannot accommodate. Herzog asserted that by imposing limit order obligations on market makers, the rule change would restrict market makers' ability to dispose of the stock acquired in such transactions. The January Herzog Letter also claimed that the rule change would reduce liquidity by reducing a market maker's ability to charge different prices for different transactions—market makers would be less willing to trade in between the spread for certain customers because the transactions would impose costly limit order obligations upon those market makers.

Herzog also forecasted that the rule change would lead to increased concentration of market makers, because vertically integrated firms, unlike wholesale firms, possess the greatest ability to directly charge customers higher commissions, markups or other fees to compensate for the loss of spread income. It stated that less sophisticated customers would be adversely affected by these changes. Herzog predicted that those market makers who cease making markets would continue to trade for their own account without incurring the obligations that a market maker must undertake.

Herzog also asserted that the rule change violated the statutory criteria imposed under the Act.[21] It asserted that the rule change would undermine competition and harm customers because it would reduce competition among different types of markets to obtain listings from companies and among market makers to fill orders, and would reduce the ability of small issuers of stock to raise capital by having their less liquid shares trade at competitive prices on Nasdaq. As an alternative, Herzog recommended that the NASD permit market makers to establish a minimum spread and fully disclose to customers a suitable net price at which they would execute limit orders.[22]

Herzog stated that the terms and conditions exceptions were unduly limited.[23] It stated that many professional investment funds do not qualify as institutional accounts as defined in Article III, Section 21(c)(4). Herzog stated that these funds are no less sophisticated or in need of protection than are accounts that meet the terms of the definition. Herzog also believes that the exception for institution-sized retail orders will protect parties beyond the small retail investors that the NASD wishes to protect. Herzog stated that the NASD will need to monitor carefully to ensure that a single large order is not broken up into multiple orders that qualify for limit order protection.

IV. Discussion

The Commission believes that the proposed rule change is consistent with the Act and the rules and regulations thereunder applicable to the NASD and, in particular, Sections 15A(b)(6), 15A(b)(9) and 11A(a)(1)(C) of the Act. Section 15A(b)(6) requires that the rules of a national securities association be designed to prevent fraudulent and manipulative acts and practices, to promote just and equitable principles of trade, to foster cooperation and coordination with persons engaged in regulating, clearing, settling and processing information with respect to, and facilitating transactions in securities, to remove impediments to and perfect the mechanism of a free and open market and a national market system and in general to protect investors and the public interest. Section 15A(b)(9) requires that the rules of the association not impose any burden on competition not necessary or appropriate in furtherance of the purposes of the Act. Section 11A(a)(1)(C) (i) and (iv) sets forth the objectives of assuring economically efficient execution of securities transactions and the practicability of brokers executing investors' orders in the best market.[24]

[21] Herzog claims that the rule change would violate, *inter alia,* Section 6(b)(5) of the Act, 15 U.S.C. § 78f(b)(5) (requiring that the rules of national securities exchanges not be designed to permit unfair discrimination between customers, issuers, brokers, or dealers); and Section 15A(b)(9) of the Act, 15 U.S.C. § 78o–3(b)(9) (requiring that the rules of registered securities associations not impose any burden on competition not necessary or appropriate in furtherance of the purposes of the Act).

The Commission notes that Section 6(b) of the Act is inapplicable to the rules of the NASD, which is not a national securities exchange. However, Section 15A(b)(6) of the Act, 15 U.S.C. § 78o–3(b)(6), imposes requirements upon NASD rules that are virtually identical to those imposed upon the rules of national securities exchanges by Section 6(b)(5).

[22] Herzog did not address whether a rule establishing a minimum spread would violate Section 15A(b)(6) of the Act, which requires, *inter alia,* that NASD rules not be designed to fix minimum profits or to impose any schedule or fix rates of commission, allowances, discounts or other fees to be charged by NASD members.

[23] *See* March Herzog Letter.

[24] Although the Commission is required to evaluate the proposed rule change for consistency with Section 15A of the Act, the Commission believes the goals of Section 11A are equally served by this proposed rule change.

A. Enhanced Limit Order Protection

The Commission recognizes that prior to adoption of the Interpretation in June 1994, the practice of Nasdaq market makers trading ahead of their customers' limit orders was widespread and longstanding. These practices generally are not in the interests of customers. The Interpretation is approved in June 1994 recognized the need to enhance customer limit order protection on Nasdaq. The current proposed rule change fosters fair and open markets and investor protection by extending limit order protection for investors to member-to-member trades.

Market makers argue that extending customer limit order priority to member-to-member orders would deny market makers their customary compensation for being at risk. It is not clear, however that the risk associated with market making in Nasdaq securities requires compensation derived from trading ahead of the customer. Market makers will continue to be able to derive trading profits in executing orders, including limit orders, and are entitled to receive compensation for handling limit orders, provided that the method of compensation chosen is clearly disclosed to the customer, such as by charging a commission for handling the limit order. Accordingly, the Commission believes that extending the prohibition against the practice of trading ahead of customer limit orders to member-to-member trades will not result in a ''mass exodus'' of market makers from Nasdaq. Indeed, experience with customer limit order priority since last June suggests that such concerns are overstated. Firms that refuse to accept limit orders because they may not trade ahead of such orders may find their customers gravitating toward other firms that are willing to provide limit order protection.

The Commission also believes that disclosure is not an adequate remedy for the practice of trading ahead of customer limit orders. In a typical agency relationship, disclosure often is relied upon as an adequate means of resolving a conflict of interest between an agent and its principal.[25] Investors enjoy greater protection under the federal securities laws, however, than that afforded by common law; a general common law remedy of disclosure does not always suffice.[26] A stricter duty may be imposed where, as here, the principals are investors and the agents control access to the trading market. The NASD already has recognized this obligation in the context of customer limit order priority for a member's own customers. The NASD also has a similar prohibition that applies to its members trading in the third market.[27]

Disclosure does not protect the interests of many customers affected by trading ahead. The cost of the customer each time a market maker fails to execute a customer's limit order it is holding is not removed by disclosure. A customer cannot receive the most timely execution or best price if the dealer handling the customer's order trades at superior prices without executing the limit order. The broker trading ahead of a public limit order is competing with public customers for an execution. To derive any benefit from disclosure, a customer must find a broker that will route orders to market makers that do not trade ahead of customer limit orders. Because the practice of market makers trading ahead of customer limit orders sent to them form other market makers is widespread in the over-the-counter market, the choices of market makers are limited.[28]

In extending customer limit order priority to member-to-member trades, the Commission does not intend to suggest that trading of Nasdaq securities must conform to all auction market principles.[29] Nevertheless, just as the Commission believes that the dealers in exchange-listed securities must adhere to certain minimum standards with respect to order handling procedures, it also believes that market makers in Nasdaq securities should adhere to certain minimum standards of fair treatment of customers.

The Commission believes that certain current Nasdaq limit order practices have created confusion in the minds of investors and are inconsistent with the growth and maturity of the Nasdaq market. The Commission believes that a customer's limit order should be protected from trading ahead regardless of whether that order is entered in an auction or dealer market, and regardless of whether the order accepted and handled by the firm is that of the firm's own customer or is a member-to-member limit order.

The Commission recently stated that it is reasonable for customers to expect that the quality of the execution received will not vary from trade to trade.[30] NASD rules currently allow the quality of the execution of a customer limit order to vary depending on whether the customer's firm or an affiliate makes a market in a security or whether that firm sends the order to another market maker for execution. The rule change approved today will assure that the quality of execution of customer limit orders will not depend upon whether the agency chosen by a customer to handle its limit order also makes a market in a security in which that customer is interested.

The Commission believes that the rule change will improve significantly the timeliness of customer executions. By providing a customer's limit order priority over the market maker's propriety trading, more trade volume will be available to be matched with the customer's order, resulting in quicker and more frequent executions for customers. More expeditious handling of customer limit orders will, in turn, provide all investors with a more accurate indication of the buy and sell interest at a given moment. The rule change also will encourage dealers to execute customer limit orders promptly so that they may continue their proprietary trading activities.

The rule change also will improve the price discovery process in Nasdaq securities. Limit orders contribute to price discovery by disclosing preferred customer trading prices and by tightening the spread between the bid and ask price of a security. In the past, customers may have refrained from placing limit orders because of the uncertainty of and difficulty in obtaining an execution for such orders until the inside price reached the limit order price. The practice of delaying executions until the inside price reaches the customer's limit order price also impedes price discovery by artificially delaying or preventing execution and reporting of customer limit orders.

Customers also incur costs in terms of inferior or missed executions for limit orders when a market maker delays execution of customer limit orders until the inside price reaches the customer's limit order price. The rule change approved today enhances the ability of customers to monitor the cost of a

[25] Market 2000 Study, *supra* n. 10, at V–8.

[26] *See, e.g., Herman & MacLean* v. *Huddleston,* 459 U.S. 375, 389 (1983) (''An important purpose of the federal securities statutes was to rectify perceived deficiencies in the available common law protection by establishing higher standards of conduct in the securities industry.'').

[27] Third market dealers operate similarly to Nasdaq market makers. The NASD's rules already prohibit trading ahead of customer limit orders in the third market. *NASD Manual,* Schedules to the By-Laws, Schedule G, Section 4(f) (CCH) ¶ 1921. Despite this prohibition, statistics compiled by the Consolidated Tape Association indicate that third market dealers currently account for better than 10% of listed stock orders as a percentage of share volume.

[28] Unlike institutional customers, most retail customers do not submit orders of a character which enables them to negotiate effectively execution parameters.

[29] Market 2000 Study, *supra* n. 10, at V–9.

[30] Release 34–34753, *supra* n. 14.

transaction and choose a broker-dealer on that basis.[31] This imposes a competitive discipline on market makers to achieve the best possible execution for customers or risk losing business. Unlike institutional clients who are in a better position to negotiate their own protection with market makers, public customers have less viable alternatives in determining where their orders are ultimately sent for execution. The rule change provides market makers with a necessary incentive to provide superior executions to public customers.

B. Scope of the Rule Change

The NASD has determined to extend limit order protection to Nasdaq SmallCap securities. The Commission Proposal also requested comment on including within the rule Nasdaq SmallCap securities and over-the counter Bulletin Board-eligible securities. Lehman recommended that the Commission Proposal be limited to Nasdaq National Market securities, because the markets for non-National Market securities are less developed.[32] Lehman stated that the adverse liquidity consequences of extending limit order protection to non-National Market securities is more severe. Nonetheless, there has not been any evidence offered to the Commission of adverse liquidity consequences caused by the limit order protection currently extended to Nasdaq SmallCap securities. Indeed, the Commission believes that the positive effects of increased trading volume from customer limit orders on liquidity will surpass the negative effect, if any, from lost market maker profits. Furthermore, the NASD has stated that it will evaluate carefully any impact the new Interpretation may have on market maker participation or market quality during the rule's phase-in period. Therefore, the Commission believes that the benefits of uniform treatment of customer limit orders for Nasdaq SmallCap securities outweigh speculative concerns about adverse liquidity consequences.

The Commission also does not believe it is necessary to amend the Interpretation to expressly trigger limit order protection whenever a Nasdaq market making firm executes a trade in any firm account or for any person associated with the firm. Although the Interpretation by its terms applies only to trades executed in a market making account, the Commission notes that the NASD interprets a member's best execution obligation to prohibit a market maker from knowingly trading ahead of a customer's limit order when it is not acting as a market maker in the security.[33]

The Commission is not persuaded that the rule is deficient because, as suggested by Amex, it does not guarantee a customer limit order a superior priced execution in the circumstance where a market maker trades for its own account at a price better than the customer's limit price.[34] The Interpretation will benefit the customer by requiring execution of the limit order if the market maker trades for its own account even if the limit price is inside the Nasdaq best bid and offer.[35]

The Commission also believes that it is appropriate to provide a ''terms and conditions'' exception for certain types of orders. As noted above, the rule change permits a market maker to accept and hold a customer limit order subject to terms and conditions only if it is an institutional order or an institution-sized retail order.

The rule distinguishes between retail orders and institutional orders because firms and institutions typically have developed business practices pursuant to which they negotiate the conditions under which their limit orders are to be handled. In approving the NASD's rule to prohibit member firms from trading ahead of their own customers, the Commission noted its agreement with an analysis provided in the Market 2000 Study that:

> Because most market makers cannot typically fill institution-size orders out of inventory, institutions generally only hold market makers to a ''best efforts'' standard in return for the willingness of the market maker to put up substantial capital to provide liquidity for large orders. In order to permit a member firm to employ the necessary trading strategy without being subjected to the requirements of the proposed ban, the Interpretation allows the parties to set the specific ''terms and conditions'' for acceptance of institutional orders.[36]

Given that most market makers cannot typically fill institution-sized retail orders out of inventory, the rule permits market makers to negotiate with retail customers the terms and conditions under which an institution-sized retail limit order is to be handled. This provision will permit customers to negotiate separate execution parameters with market makers on a trade-by-trade basis.

The terms and conditions exception is tailored to apply to limit orders which require market makers to employ special strategies to execute and to limit orders from customers who have the ability to monitor the market for the security and to negotiate alternative execution procedures with another market maker. The Commission believes that the 10,000 share/$100,000 threshold for institution-sized retail orders appropriately distinguishes between: (1) Those orders that do not require market makers to exhaust their inventory or commit large amounts of capital and those orders that do; and (2) customers who have the ability to negotiate effectively the execution parameters of their trades and those who do not.

Market makers must protect an institutional order unless they have negotiated specific terms and conditions regarding the order. As a general matter, all limit order should be entitled to limit order protection. The Commission recognizes, however, that market makers may require some flexibility with respect to larger orders and institutional investors. Accordingly, it is appropriate to permit market makers to negotiate specific terms and conditions for handling certain orders. The exception for institutional orders recognizes the ability of institutions to negotiate specific order handling procedures and their desire to have the ability to negotiate special procedures for orders of less than 10,000 shares or less than $100,000 in value. In this regard, the Commission notes that the NASD interprets the ''institutional account'' definition in Article III, Section 21(c)(4) of the NASD Rules of Fair Practice to apply to any account managed by a registered investment adviser.

[31] Dealers may attempt to compensate for lost income with wider spreads or with higher commissions. Customers would be able to compare such charges among dealers. *See* Market 2000 Study, *supra* n. 10, at V–8–9.

[32] *See* Letter from Richard T. Chase, Senior Vice President and Chief Counsel, Lehman Brothers Inc. (''Lehman'') to Jonathan G. Katz, Secretary, SEC, dated November 16, 1994 (''Lehman Letter''). The Lehman Letter was submitted in response to the Commission Proposal.

[33] *See* Letter from Richard G. Ketchum, Executive Vice President, NASD to Holly H. Smith, Associate Director, Division of Market Regulation, SEC, dated March 31, 1995 (available in Commission's Public Reference Room). *See also* Special NASD Notice to Members 94–58, Answer to Question #11 (July 15, 1994) (''[i]t has never been the NASD's position that members can trade ahead of their customer's limit orders when not acting as a market maker.'').

[34] The Commission Proposal would require a superior priced execution in the circumstance where a market maker trades for its own account at a price better than the customer's limit order price. *See* Release 34–34753, *supra* n. 14.

[35] The Commission notes that a market maker may have executed a trade for its own account at a price better than the customer's limit price because the inside market has moved. Under these circumstances, the limit order may have become marketable. A market maker's best execution obligations in such circumstances may require the marker maker to execute the limit order at a price more favorable to the customer than the limit price.

[36] *See* Release 34–34279, *supra* n. 9.

Nonetheless, the Commission would be concerned if market makers uniformly attempt to negotiate the terms and conditions for execution of smaller-sized institutional orders in order to trade ahead of these orders. In addition, it may be appropriate to reconsider at a later date whether the proposed rule change approved today provides sufficient protection to market participants and, if necessary, to extend the scope of limit order protection beyond the classes of orders and customers protected by the rule change approved today.[37]

In this regard, the Commission also is sensitive to the concerns expressed by Amex about extending the protections envisaged by the rule to limit orders placed with Nasdaq market makers by other broker-dealers, including options specialists and registered options traders. The Commission recognizes the importance in terms of price discovery and market efficiency and liquidity for options specialists and market makers to have efficient and economical opportunities for laying off risk in the Nasdaq market.[38] Given that market makers can refuse to accept a limit order, and recognizing that the NASD could allow market makers the flexibility to negotiate terms and conditions for the handling of options market maker limit orders, the Commission questions why, once accepted, a market maker should not be required to protect that limit order. Accordingly, the Commission also expects the NASD to consider extending the scope of limit order protections to orders of options specialists and market makers.

C. Other Issues

Key to Herzog's objection to the rule change is its assertion that wholesale firms do not charge commissions and do not have the retail customer relationships that would permit them to charge commissions. The Commission notes that there are no legal impediments that prevent wholesale firms from charging commissions or establishing other clearly disclosed compensation arrangements with respect to limit order execution. Furthermore, Herzog neither asserted nor offered evidence to demonstrate that wholesale firms would be precluded from utilizing other methods, apart from widening spreads, to ensure that they are compensated for executing limit orders.

The Commission notes that market makers are not required to accept limit orders to buy at the bid or limit orders to sell at the offer. Market makers are not precluded from acting in an agency capacity by matching incoming limit orders with market orders. Indeed, the Commission notes that to the extent that market makers act in an agency capacity, their inventory and capital requirements are lessened.

The Commission also does not believe that market makers would be required to fill limit orders at spreads narrower than those naturally resulting from competition. As noted above, the Commission believes that limit order protection will enhance quote competition in the Nasdaq market; therefore, the rule change should facilitate narrower spreads that reflect a full range of competition. The Commission believes that limit orders will provide market makers with increased competition. Indeed, if market makers expanded their spreads beyond what was reasonable for a particular security, the rule approved today enhances the ability of customers to enter limit orders to improve the market.

The Commission also believes that the rule change approved will not have a significant deleterious impact upon market participation. The Commission notes that market makers who cease market making also must forego certain legal benefits available only to market makers.[39] Furthermore, as broker-dealers, these market makers would not be entitled to limit order price protection.[40]

The Commission also does not believe that the rule change will reduce competition for listings among different types of markets. Rather, the Commission believes that limit order protection is a feature that will attract investors and ultimately issuers to the Nasdaq market; the rule may in fact increase competition among market makers to attract limit orders so that they can match incoming limit orders on an agency basis and reduce the amount of capital that they must commit to transactions. This, in turn, may permit market makers to make markets in a larger number of securities, which would lead to enhanced opportunities for small issuers to raise capital.

The Commission does not agree with Herzog that the rule change will favor more sophisticated limit order traders over traders who enter market orders. The Commission believes that market orders will benefit if they have the opportunity to interact with limit orders as well as market maker quotes. Thus, small investors maybe among the primary beneficiaries of the rule change, contrary to Herzog's assertions.

The Commission does not believe that a market maker is required to execute a limit order without compensation. The Commission does believe, however, that the terms of compensation should be clear to the customer. The Commission believes that a market maker who accepts and holds a limit order from a customer must execute the transaction at the limit order price set by the customer, not at a ''net'' price that obfuscates the amount of compensation that the market maker is receiving.[41]

For example, assume that the best inter-dealer market for a particular security is $10 bid, $10¼ ask. A market maker accepts and holds a retail limit order to sell that security at $10 3/16. The Commission believes that if that market maker sells the security to another person at $10¼, it must also fill the limit order to sell at $10 3/16, because the sale at $10¼ constitutes a transaction at a price that would satisfy the customer's limit order. Any costs incurred by the market maker in connection with the execution of the transaction are irrelevant in determining whether a transaction has occurred at a price that would satisfy the customer's limit order. The Interpretation calls for market makers to execute limit orders whenever they execute a transaction for their market making account at a *price* that would satisfy the customer's limit order. The Commission emphasizes that ''price'' is determined from the vantage point of the customer, not by reference to ''net proceeds'' received by the firm on a sale or the purchase price paid plus costs incurred in connection with a purchase.[41]

[37] The Commission has determined not to withdraw the Commission Proposal at this time. It will review the operation of the rule change approved today before it determines whether to approve, amend or withdraw the Commission Proposal.

[38] *See, e.g.,* Securities Exchange Act Release No. 34277 (June 29, 1994), 59 FR 34885 (July 7, 1994) (approving short-sale rule for Nasdaq National Market securities); Division of Market Regulation, SEC, The October 1987 Market Break, 8–18–20 (1988).

[39] *See, e.g.,* 17 CFR 200.12(d) (providing favorable margin treatment for market makers).

In addition, Rule 15c3–1(a)(6)(i) provides favorable net capital treatment for wholesale market makers. A wholesale firm that withdraws from market maker status no longer would be entitled to compute its net capital pursuant to that provision. 17 CFR 240.15c3–1(a)(6)(i).

[40] *See supra* text an accompanying note 15.

[41] See Special NASDA Notice to Members 94–58, *surpa* n. 29, Answer to Question #2.

[42] The Commission believes it is permissible for a customer to instruct a market maker to purchase (sell) a security for it such that the total costs (proceeds) to the customer (including any commissions, markups or other charges) are not greater (less) than a single net price per share. Thus, for example, if a customer enters a limit order to

Finally, the Commission believes that the rule change does not impose any burden on competition that is not necessary or appropriate in furtherance of the purposes of the Act. As noted above, Herzog asserted that the rule change will have a disparate impact upon wholesale firms, because such firms allegedly lack the ability of vertically integrated firms to directly charge customers higher commissions, markups or other fees to compensate for the loss of spread income. The Commission recognizes that as a consequence of the rule change, some wholesale firms may seek to establish alternative sources of revenue, including charging commissions. The Commission believes that any burden imposed by shifts in fee structures is outweighed by the improved price discovery, execution and pricing advantages that customers will realize as a result of the rule change. In addition more customers will be accorded treatment that satisfies reasonable expectations of fairness and investor protection.

V. Conclusion

For the foregoing reasons, the Commission finds that the proposed rule change is consistent with the Act and the rules and regulations thereunder applicable to the NASD and, in particular, Sections 15A(b)(6), and 15A(b)(9) and 11A(a)(1)(C) of the Act.

It is therefore ordered, pursuant to Section 19(b)(2) of the Act, that the proposed rule change SR–NASD–94–62 be, and hereby is, approved, effective June 21, 1994.

By the Commission.

Jonathan G. Katz,

Secretary.

[FR Doc. 95–12987 Filed 5–25–95; 8:45 am]

BILLING CODE 8010–01–M

purchase security XYZ and requests that its total costs not exceed $10 per share, and the customer is informed that the market maker charges a markup of ¼, then a market maker may continue to purchase for its own account at $10 without also executing the customer order. The customer order would be deemed a limit order at $9¾. The Commission emphasizes that ''the price at which the limit order is to be protected must be clearly explained to the customer.'' *See id.*

[Release No. 34–35745; File No. SR–CBOE–95–26]

Self-Regulatory Organizations; Notice of Filing and Immediate Effectiveness of Proposed Rule Change by the Chicago Board Options Exchange, Incorporated Relating to the Content Outline for the General Securities Sales Supervisor (Series 8) Examination

May 19, 1995.

Pursuant to Section 19(b)(1) of the Securities Exchange Act of 1934 (''Act''), 15 U.S.C. 78s(b)(1), notice is hereby given that on May 12, 1995, the Chicago Board Options Exchange, Incorporated (''CBOE'' or ''Exchange'') filed with the Securities and Exchange Commission (''Commission'') the proposed rule change as described in Items I, II, and III below, which Items have been prepared by the self-regulatory organization. The Commission is publishing this notice to solicit comments on the proposed rule change from interested persons.

I. Self-Regulatory Organization's Statement of the Terms of Substance of the Proposed Rule Change

The CBOE proposes to use a revised Content Outline for the General Securities Sales Supervisor (Series 8) Examination (''Series 8'').

The text of the proposed rule change is available at the CBOE and the Commission.

II. Self-Regulatory Organization's Statement of the Purpose of, and Statutory Basis for, the Proposed Rule Change

In its filing with the Commission, the self-regulatory organization included statements concerning the purpose of and basis for the proposed rule change and discussed any comments it received on the proposed rule change. The text of these statements may be examined at the places specified in Item IV below. The self-regulatory organization has prepared summaries, set forth in Sections A, B, and C below, of the most significant aspects of such statements.

A. Self-Regulatory Organization's Statement of the Purpose of, and Statutory Basis for, the Proposed Rule Change

1. Purpose

The Series 8 examination is an industry-wide qualification examination for securities sales supervisors. The Series 8 examination is generally required under rules of the self-regulatory organizations (''SROs'') for persons who are engaged in the supervision of general securities branch offices (*i.e.*, branch office managers) and of general securities registered representatives. The Series 8 examination tests a candidate's knowledge of securities industry rules and regulations and certain statutory provisions applicable to general securities sales supervision. The Series 8 Content Outline details the subject coverage and question allocation of the examination.

Revision of the Series 8 examination and Content Outline was recently undertaken by an industry committee composed of representatives from SROs (the New York Stock Exchange, the American Stock Exchange, the Chicago Board Options Exchange, the Municipal Securities Rulemaking Board, the National Association of Securities Dealers, and the Philadelphia Stock Exchange) and representatives from broker-dealers, including branch office managers, compliance personnel, and corporate executives, in order to update the examination in view of changes in relevant laws, rules, and regulations, the development of new products, and to reflect various changes in industry practices. The committee reviewed the examination specifications, content areas, and item bank and developed some new questions in new areas.

The revised examination continues to cover the areas of knowledge required to supervise sales activities in securities. However, the focus of the content of the examination has been shifted to concentrate more closely on supervisory duties. Accordingly, certain questions have been deleted from the examination that deal with routine calculations and basic product knowledge, and questions on new federal and SRO rules and regulations have been incorporated into the examination, as well as questions on new products, supervision, and changes in industry practices. The Content Outline reflects the revised content of the examination. The examination will remain a six-hour, two-part, 200 question examination.

2. Statutory Basis

The statutory basis for the Series 8 examination lies in Section 6(c)(3)(B) of the Act. Under that Section, it is the Exchange's responsibility to prescribe standards of training, experience, and competence for persons associated with Exchange members and member organizations. Pursuant to this statutory obligation, the Exchange has developed examinations that are administered to establish that persons associated with Exchange members and member organizations have attained specific levels of competence and knowledge.

B. Self-Regulatory Organization's Statement on Burden on Competition

The Exchange does not believe that the proposed rule change will impose any burden on competition.

C. Self-Regulatory Organization's Statement on Comments on the Proposed Rule Change Received from Members, Participants or Others

No written comments were solicited or received with respect to the proposed rule change.

III. Date of Effectiveness of the Proposed Rule Change and Timing for Commission Action

Because the foregoing proposed rule change: (1) Does not significantly affect the protection of investors or the public interest; (2) does not impose any significant burden on competition; and (3) does not become operative for 30 days from May 12, 1995, the date on which it was filed, and the Exchange provided the Commission with written notice of its intent to file the proposed rule change at least five days prior to the filing date, it has become effective pursuant to Section 19(b)(3)(A) of the Act and Rule 19b–4(e)(6) thereunder.[1]

At any time within 60 days of the filing of the proposed rule change, the Commission may summarily abrogate such rule change if it appears to the Commission that such action is necessary or appropriate in the public interest, for the protection of investors, or otherwise in furtherance of the purposes of the Act.

IV. Solicitation of Comments

Interested persons are invited to submit written data, views, and arguments concerning the foregoing. Persons making written submissions should file six copies thereof with the Secretary, Securities and Exchange Commission, 450 Fifth Street, NW., Washington, DC 20549. Copies of the submission, all subsequent amendments, all written statements with respect to the proposed rule change that are filed with the Commission, and all written communications relating to the proposed rule change between the Commission and any person, other than those that may be withheld from the public in accordance with the provisions of 5 U.S.C. § 552, will be available for inspection and copying at the Commission's Public Reference Section, 450 Fifth Street, NW., Washington, DC 20549. Copies of such filing will also be available for inspection and copying at the principal office of the Exchange. All submissions should refer to File No. SR–CBOE–95–26 and should be submitted by June 16, 1995.

For the Commission, by the Division of Market Regulation, pursuant to delegated authority.

Jonathan G. Katz,

Secretary.

[FR Doc. 95–12985 Filed 5–25–95; 8:45 am]

BILLING CODE 8010–01–M

[1] The proposed rule change is identical to the rule change previously approved by the Commission for the New York Stock Exchange, Inc. and the National Association of Securities Dealers. *See* Securities Exchange Act Release No. 34967 (Nov. 10, 1994), 59 FR 59803 (Nov. 18, 1994) (File Nos. SR–NYSE–94–23; SR–NYSE–94–24); Securities Exchange Act Release No. 35208 (Jan. 10, 1995), 60 FR 3688 (Jan. 18, 1995) (File No. SR–NASD–94–66).

[Release No. 34–35743; File No. SR–CBOE–95–24]

Self-Regulatory Organizations; Notice of Filing and Immediate Effectiveness of Proposed Rule Change by the Chicago Board Options Exchange, Incorporated Relating to the Content Outline for the General Securities Registered Representative (Series 7) Examination

May 19, 1995.

Pursuant to Section 19(b)(1) of the Securities Exchange Act of 1934 (''Act''), 15 U.S.C. 78s(b)(1), notice is hereby given that on May 12, 1995, the Chicago Board Options Exchange, Incorporated (''CBOE'' or ''Exchange'') filed with the Securities and Exchange Commission (''Commission'') the proposed rule change as described in Items I, II, and III below, which Items have been prepared by the self-regulatory organization. The Commission is publishing this notice to solicit comments on the proposed rule change from interested persons.

I. Self-Regulatory Organization's Statement of the Terms of Substance of the Proposed Rule Change

The CBOE proposes to use a revised Content Outline for the General Securities Registered Representative (Series 7) Examination (''Series 7'').

The text of the proposed rule change is available at the CBOE and the Commission.

II. Self-Regulatory Organization's Statement of the Purpose of, and Statutory Basis for, the Proposed Rule Change

In its filing with the Commission, the self-regulatory organization included statements concerning the purpose of and basis for the proposed rule change and discussed any comments it received on the proposed rule change. The text of these statements may be examined at the places specified in Item IV below. The self-regulatory organization has prepared summaries, set forth in Sections A, B, and C below, of the most significant aspects of such statements.

A. Self-Regulatory Organization's Statement of the Purpose of, and Statutory Basis for, the Proposed Rule Change

1. Purpose

The purpose of the proposed rule change is to revise and update the Content Outline for the Series 7 examination. The Series 7 examination was created in 1974 as an industry-wide qualification examination for persons seeking registration as general securities representatives. The Series 7 examination is generally required under rules of the self-regulatory organizations (''SROs'') for persons who are engaged in the solicitation, purchase, and/or sale of securities for the accounts of customers. The purpose of the Series 7 examination is to ensure that registered representatives have the basic knowledge necessary to perform their functions and responsibilities. The Series 7 Content Outline details the subject coverage and questions allocation of the Series 7 examination.

Revision of the Series 7 examination and Content Outline was initiated in April 1993 by an industry committee of SROs and broker-dealers representatives[1] in order to update the examination in view of changes in the securities industry, including changes in relevant rules and regulations, the development of new securities products, and changes in the job of registered representatives as firms offer an increasingly wide range of financial services. The Content Outline for the Series 7 examination has not been revised since 1986.

The industry committee updated the existing statements of the critical functions of registered representatives to ensure current relevance and appropriateness, drafted statements of tasks expected to be performed by entry-level registered representatives, and conformed the existing Content Outline to the task statements. The Content Outline reflects the revised content of the Series 7 examination. Under the proposed rule change, the total number

[1] SROs on the committee include the New York Stock Exchange, American Stock Exchange, Chicago Board Options Exchange, Municipal Securities Rulemaking Board, National Association of Securities Dealers, and Philadelphia Stock Exchange. Broker-dealer representatives include branch office managers, compliance officers, training personnel, and registered representatives.

of questions in the Series 7 examination will remain at 250, and the revised examination will cover all financial product areas covered on the present Series 7 examination as well as several new products, including collateralized mortgage obligations (''CMOs''), long term equity anticipation securities (''LEAPS''), and CAPS, with reduced emphasis on direct participation programs.

2. Statutory Basis

The statutory basis for the Series 7 examination lies in Section 6(c)(3)(B) of the Act. Under that Section, it is the Exchange's responsibility to prescribe standards of training, experience, and competence for persons associated with Exchange members and member organizations. Pursuant to this statutory obligation, the Exchange has developed examinations that are administered to establish that persons associated with Exchange members and member organizations have attained specified levels of competence and knowledge.

B. Self-Regulatory Organization's Statement on Burden on Competition

The Exchange does not believe that the proposed rule change will impose any burden on competition.

C. Self-Regulatory Organization's Statement on Comments on the Proposed Rule Change Received From Members, Participants or Others

No written comments were solicited or received with respect to the proposed rule change.

III. Date of Effectiveness of the Proposed Rule Change and Timing for Commission Action

Because the foregoing proposed rule change: (1) Does not significantly affect the protection of investors or the public interest; (2) does not impose any significant burden on competition; and (3) does not become operative for 30 days from May 12, 1995, the date on which it was filed, and the Exchange provided the Commission with written notice of its intent to file the proposed rule change at least five days prior to the filing date, it has become effective pursuant to Section 19(b)(3)(A) of the Act and Rule 19b–4(e)(6) thereunder.[2]

At any time within 60 days of the filing of the proposed rule change, the Commission may summarily abrogate such rule change if it appears to the Commission that such action is necessary or appropriate in the public interest, for the protection of investors, or otherwise in furtherance of the purposes of the Act.

IV. Solicitation of Comments

Interested persons are invited to submit written data, views, and arguments concerning the foregoing. Persons making written submissions should file six copies thereof with the Secretary, Securities and Exchange Commission, 450 Fifth Street, NW., Washington, DC 20549. Copies of the submission, all subsequent amendments, all written statements with respect to the proposed rule change that are filed with the Commission, and all written communications relating to the proposed rule change between the Commission and any person, other than those that may be withheld from the public in accordance with the provisions of 5 U.S.C. 552, will be available for inspection and copying at the Commission's Public Reference Section, 450 Fifth Street, NW., Washington, DC 20549. Copies of such filing will also be available for inspection and copying at the principal office of the Exchange. All submissions should refer to File No. SR–CBOE–95–24 and should be submitted by June 16, 1995.

For the Commission, by the Division of Market Regulation, pursuant to delegated authority.

Jonathan G. Katz,

Secretary.

[FR Doc. 95–12984 Filed 5–25–95; 8:45 am]

BILLING CODE 8010–01–M

[2] The proposed rule change is identical to the rule change previously approved by the Commission for the New York Stock Exchange, Inc. and the National Association of Securities Dealers. *See* Securities Exchange Act Release No. 34853 (Oct. 18, 1994), 59 FR 53694 (Oct. 25, 1994) (File Nos. SR–NYSE–94–26; SR–NYSE–94–27); Securities Exchange Act Release No. 35401 (Feb. 22, 1995), 60 FR 10886 (Feb. 28, 1995) (File No. SR–NASD–95–04).

[Release No. 34–35744; File No. SR–CBOE–95–25]

Self-Regulatory Organizations; Notice of Filing and Immediate Effectiveness of Proposed Rule Change by the Chicago Board Options Exchange, Incorporated, Relating to the Examination Specifications for the General Securities Registered Representative (Series 7) Examination

May 19, 1995.

Pursuant to Section 19(b)(1) of the Securities Exchange Act of 1934 (''Act''), 15 U.S.C. 78s(b)(1), notice is hereby given that on May 12, 1995, the Chicago Board Options Exchange, Incorporated (''CBOE'' or ''Exchange'') filed with the Securities and Exchange Commission (''Commission'') the proposed rule change as described in Items I, II, and III below, which Items have been prepared by the self-regulatory organization. The Commission is publishing this notice to solicit comments on the proposed rule change from interested persons.

I. Self-Regulatory Organization's Statement of the Terms of Substance of the Proposed Rule Change

The CBOE proposes to use a revised version of the General Securities Registered Representative (Series 7) Examination (''Series 7'') and corresponding specifications.

The text of the proposed rule change is available at the CBOE and the Commission.

II. Self-Regulatory Organization's Statement of the Purpose of, and Statutory Basis for, the Proposed Rule Change

In its filing with the Commission, the self-regulatory organization included statements concerning the purpose of and basis for the proposed rule change and discussed any comments it received on the proposed rule change. The text of these statements may be examined at the places specified in Item IV below. The self-regulatory organization has prepared summaries, set forth in Sections A, B, and C below, of the most significant aspects of such statements.

A. Self-Regulatory Organization's Statement of the Purpose of, and Statutory Basis for, the Proposed Rule Change

1. Purpose

The purpose of the proposed rule change is to revise, update, and seek approval for the Series 7 examination and specifications. The Series 7 examination was created in 1974 as an industry-wide qualification examination for persons seeking registration as general securities representatives. The Series 7 examination is generally required under rules of the self-regulatory organizations (''SROs'') for persons who are engaged in the solicitation, purchase, and/or sale of securities for the accounts of customers. The purpose of the Series 7 examination is to ensure that registered representatives have the basic knowledge necessary to perform their functions and responsibilities. The Series 7 examination specifications detail the areas covered by the examination and break down the number of examination questions culled from each area.

Revision of the Series 7 examination and specifications was initiated in April

1993 by an industry committee of SROs and broker-dealers representatives[1] in order to update the examination in view of changes in the securities industry, including changes in relevant rules and regulations, the development of new securities products, and changes in the job of registered representatives as firms offer an increasingly wide range of financial services. The examination specifications for the Series 7 examination have not been revised since 1986.

The industry committee updated the existing statements of the critical functions of registered representatives to ensure current relevance and appropriateness and drafted statements of tasks expected to be performed by entry-level registered representatives. Under the proposed rule change, the total number of questions in the Series 7 examination will remain at 250, and the revised examination will cover all financial product areas covered on the present Series 7 examination as well as several new products, including collateralized mortgage obligations (''CMOs''), long term equity anticipation securities (''LEAPS''), and CAPS, with reduced emphasis on direct participation programs.

2. Statutory Basis

The statutory basis for the Series 7 examination lies in Section 6(c)(3)(B) of the Act. Under that Section, it is the Exchange's responsibility to prescribe standards of training, experience, and competence for persons associated with Exchange members and member organizations. Pursuant to this statutory obligation, the Exchange has developed examinations that are administered to establish that persons associated with Exchange members and member organizations have attained specified levels of competence and knowledge.

B. Self-Regulatory Organization's Statement on Burden on Competition

The Exchange does not believe that the proposed rule change will impose any burden on competition.

C. Self-Regulatory Organization's Statement on Comments on the Proposed Rule Change Received From Members, Participants or Others

No written comments were solicited or received with respect to the proposed rule change.

[1] SROs on the committee include the New York Stock Exchange, American Stock Exchange, Chicago Board Options Exchange, Municipal Securities Rulemaking Board, National Association of Securities Dealers, and Philadelphia Stock Exchange. Broker-dealer representatives include branch office managers, compliance officers, training personnel, and registered representatives.

III. Date of Effectiveness of the Proposed Rule Change and Timing for Commission Action

Because the foregoing proposed rule change: (1) does not significantly affect the protection of investors or the public interest; (2) does not impose any significant burden on competition; and (3) does not become operative for 30 days from May 12, 1995, the date on which it was filed, and the Exchange provided the Commission with written notice of its intent to file the proposed rule change at least five days prior to the filing date, it has become effective pursuant to Section 19(b)(3)(A) of the Act and Rule 129b–(e)(6) thereunder.[2]

At any time written 60 days of the filing of the proposed rule change, the Commission may summarily abrogate such rule change if it appears to the Commission that such action is necessary of appropriate in the public interest, for the protection of investors, or otherwise in furtherance of the purposes of the Act.

IV. Socitiation of Comments

Interested persons are invited to submit written data, views, and arguments concerning the foregoing. Persons making written submissions should file six copies thereof with the Secretary, Securities and Exchange Commission, 450 Fifth Street NW., Washington, D.C. 20549. Copies of the submission, all subsequent amendments, all written statements with respect to the proposed rule change that are filed with the Commission, and all written communications relating to the proposed rule change between the Commission and any person, other than those that may be withheld from the public in accordance with the provisions of 5 U.S.C. 552, will be available for inspection and copying at the Commission's Public Reference Section, 450 Fifth Street, NW., Washington, D.C. 20549. Copies of such filing will also be available for inspection and copying at the principal office of the Exchange. All submiss9ions should refer to File No. SR–CBOE–95–25 and should be submitted by June 16, 1995.

[2] The proposed rule change is identical to the rule change previously approved by the Commission for the New York Stock Exchange, Inc. and the National Association of Securities Dealers. *See* Securities Exchange Act Release No. 34853 (Oct. 18, 1994), 59 FR 53694 (Oct. 25, 1994) (File Nos. SR–NYSE–94–26; SR–NYSE–94–27); Securities Exchange Act Release No. 35401 (Feb. 22, 1995), 60 FR 10886 (Feb. 28, 1995) (File No. SR–NASD–95–04).

For the Commission, by the Division of Market Regulation, pursuant to delegated authority.

Jonathan G. Kartz,

Secretary.

[FR Doc. 95–12983 Filed 5–28–95; 8:45 am]

BILLING CODE 8010–01–M

[Release No. 34–35746; File No. SR–CBOE–95–27]

Self-Regulatory Organizations; Notice of Filing and Immediate Effectiveness of Proposed Rule Change by the Chicago Board Options Exchange, Incorporated, Relating to the Examination Specifications for the General Securities Sales Supervisor (Series 8) Examination

May 19, 1995.

Pursuant to Section 19(b)(1) of the Securities Exchange Act of 1934 (''Act''), 15 U.S.C. 78s(b)(1), notice is hereby given that on May 12, 1995, the Chicago Board Options Exchange, Incorporated (''CBOE'' or ''Exchange'') filed with the Securities and Exchange Commission (''Commission'') filed with the Securities and Exchange Commission (''Commission'') the proposed rule change as described in Items I, II, and III below, which Items have been prepared by the self-regulatory organization. The Commission is publishing this notice to solicit comments on the proposed rule change from interested persons.

I. Self-Regulatory Organization's Statement of the Terms of Substance of the Proposed Rule Change

The CBOE proposes to use a revised version of the General Securities Sales Supervisor (Series 8) Examination (''Series 8'') and corresponding specifications.

The text of the proposed rule change is available at the CBOE and the Commission.

II. Self-Regulatory Organization's Statement of the Purpose of, and Statutory Basis for, the Proposed Rule Change

In its filing with the Commission, the self-regulatory organization included statements concerning the purpose of and basis for the proposed rule change and discussed any comments it received on the proposed rule change. The text of these statements may be examined at the places specified in Item IV below. The self-regulatory organization has prepared summaries, set forth in Sections A, B, and C below, of the most significant aspects of such statements.

A. Self-Regulatory Organization's Statement of the Purpose of, and Statutory Basis for, the Propose Rule Change

1. Purpose

The Series 8 examination is an industry-wide qualification examination for securities sales supervisors. The Series 8 examination is generally required under rules of the self-regulatory organizations (''SROs'') for persons who are engaged in the supervision of general securities branch offices (*i.e.*, branch office managers) and of general securities registered representatives. The Series 8 examination tests a candidate's knowledge of securities industry rules and regulations and certain statutory provisions applicable to general securities sales supervision. The Series 8 examination specifications detail the areas covered by the examination and break down the number of examination questions culled from each area.

Revision of the Series 8 examination and specifications was recently undertaken by an industry committee composed of representatives from SROs (the New York Stock Exchange, the American Stock Exchange, the Chicago Board Options Exchange, the Municipal Securities Rulemaking Board, the National Association of Securities Dealers, and the Philadelphia Stock Exchange) and representatives from broker-dealers, including branch office managers, compliance personnel, and corporate executives, in order to update the examination in view of changes in relevant laws, rules, and regulations, the development of new products, and to reflect various changes in industry practices. The committee reviewed the examination specifications, content areas, and item bank and developed some new questions in new areas.

The revised examination continues to cover the areas of knowledge required to supervise sales activities in securities. However, the focus of the content of the examination has been shifted to concentrate more closely on supervisory duties. Accordingly, certain questions have been deleted from the examination that deal with routine calculations and basic product knowledge, and questions on new federal and SRO rules and regulations have been incorporated into the examination, as well as questions on new products, supervision, and changes in industry practices. The revised examination and specifications include coverage of these new areas. The examination will remain a six-hour, two-part, 200 question examination.

2. Statutory Basis

The statutory basis for the Series 8 examination lies in Section 6(c)(3)(B) of the Act. Under that Section, it is the Exchange's responsibility to prescribe standards of training, experience, and competence for persons associated with Exchange members and member organizations. Pursuant to this statutory obligation, the Exchange has developed examinations that are administered to establish that persons associated with Exchange members and member organizations have attained specific levels of competence and knowledge.

B. Self-Regulatory Organization's Statement on Burden on Competition

The Exchange does not believe that the proposed rule change will impose any burden on competition.

C. Self-Regulatory Organization's Statement on Comments on the Proposed Rule Change Received From Members, Participants or Others

No written comments were solicited or received with respect to the proposed rule change.

III. Date of Effectiveness of the Proposed Rule Change and Timing for Commission Action

Because the foregoing proposed rule change: (1) Does not significantly affect the protection of investors or the public interest; (2) does not impose any significant burden on competition; and (3) does not become operative for 30 days from May 12, 1995, the date on which it was filed, and the Exchange provided the Commission with written notice of its intent to file the proposed rule change at least five days prior to the filing date, it has become effective pursuant to Section 19(b)(3)(A) of the Act and Rule 19b–4(e)(6) thereunder.[1]

At any time within 60 days of the filing of the proposed rule change, the Commission may summarily abrogate such rule change if it appears to the Commission that such action is necessary or appropriate in the public interest, for the protection of investors, or otherwise in furtherance of the purposes of the Act.

IV. Solicitation of Comments

Interested persons are invited to submit written data, views, and arguments concerning the foregoing. Persons making written submissions should file six copies thereof with the Secretary, Securities and Exchange Commission, 450 Fifth Street, NW., Washington, DC 20549. Copies of the submission, all subsequent amendments, all written statements with respect to the proposed rule change that are filed with the Commission, and all written communications relating to the proposed rule change between the Commission and any person, other than those that may be withheld from the public in accordance with the provisions of 5 U.S.C. § 552, will be available for inspection and copying at the Commission's Public Reference Section, 450 Fifth Street, NW., Washington, DC 20549. Copies of such filing will also be available for inspection and copying at the principal office of the Exchange. All submissions should refer to File No. SR–CBOE–95–27 and should be submitted by June 16, 1995.

For the Commission, by the Division of Market Regulation, pursuant to delegated authority.

Jonathan G. Katz,

Secretary.

[1] The proposed rule change is identical to the rule change previously approved by the Commission for the New York Stock Exchange, Inc. and the National Association of Securities Dealers. *See* Securities Exchange Act Release No. 34967 (Nov. 10, 1994), 59 FR 59803 (Nov. 18, 1994) (File Nos. SR–NYSE–94–23; SR–NYSE–94–24); Securities Exchange Act Release No. 35208 (Jan. 10, 1995), 60 FR 3688 (Jan. 18, 1995) (File No. SR–NASD–94–66).

[Release No. 34–35753; File No. SR–CHX–95–08]

Self-Regulatory Organizations; Chicago Stock Exchange, Incorporated; Order Granting Approval to Proposed Rule Change and Notice of Filing and Order Granting Accelerated Approval to Amendment No. 1 Relating to Order Execution Guarantees

May 22, 1995.

I. Introduction

On March 2, 1995, the Chicago Stock Exchange, Incorporated (''CHX'' or ''Exchange'') submitted to the Securities and Exchange Commission (''SEC'' or ''Commission''), pursuant to Section 19(b)(1) of the Securities Exchange Act of 1934 (''Act'')[1] and Rule 19b–4 thereunder,[2] a proposed rule change to adopt new Rule 37(d), Article XX to allow specialists on the Exchange to provide order execution guarantees that are more favorable than those currently required under CHX Rule 37(a), Article XX (''BEST Rule'')[3] through the Exchange's automated execution system (''MAX'').

[1] 15 U.S.C. § 78s(b)(1) (1988).

[2] 17 CFR 240.19b–4 (1994).

[3] *See* CHX 37(a), Article XX.

The proposed rule change was published for comment in Securities Exchange Act Release No. 35547 (Mar. 29, 1995), 60 FR 17375 (Apr. 5, 1995). No comments were received on the proposal. On April 13, 1995, the Exchange submitted Amendment No. 1 to the proposed rule change.[4] This order approves the proposed rule change, including Amendment No. 1 on an accelerated basis.

II. Description of Proposal

At the present time, under the BEST Rule, Exchange specialists are required to guarantee executions of market and limit orders under certain circumstances. Under the rule, specialists must accept and guarantee execution of all agency orders, other than limit orders in Nasdaq/NMS Securities, from 100 up to and including 2099 shares. For all agency market orders, the specialist must fill the orders at the best bid or best offer disseminated pursuant to Rule 11Ac1–1 under the Act.[5] For all agency limit orders in Dual Trading System issues,[6] the specialist must fill the order if the bid or offer at the limit price has been exhausted in the primary market, there has been a price penetration of the limit in the primary market (trade through of a CHX limit order), or the issue is trading at the limit price on the primary market unless it can be demonstrated that such order would not have been executed if it had been transmitted to the primary market or the broker and specialist agree to a specific volume related or other criteria for requiring a fill.

Moreover, pursuant to current Rule 37(b), Article XX, the Exchange's MAX system provides for the automatic execution of orders that are eligible for execution under the Exchange's BEST Rule as discussed above and certain other orders as long as such orders are less than or equal to the auto-execution threshold. The specialist must set the auto-execution threshold at 1099 shares or greater on a stock-by-stock basis.

The Exchange proposes to amend Rule 37, Article XX by adding new subsection (d) to allow specialists to provide guarantees that are more favorable than those required under the BEST Rule. Moreover, under Rule 37(d), the Exchange, at the request of a specialist, may provide for automatic execution of orders through MAX in accordance with the additional guarantees that the specialists decide to provide. The Exchange expects to file with the Commission at a later time the specific modifications to the parameters of the automated execution system that are required to implement the additional guarantees.[7]

III. Discussion

The Commission finds that the proposed rule change is consistent with the requirements of the Act and the rules and regulations thereunder applicable to a national securities exchange, and, in particular, with the requirements of Section 6(b).[8] The Commission believes the proposal is consistent with the Section 6(b)(5) requirements that the rules of an exchange be designed to promote just and equitable principles of trade, to prevent fraudulent and manipulative acts, and, in general, to protect investors and the public interest.

The Commission believes that the proposed rule change to allow specialists to provide more favorable guarantees than those currently required under CHX's Best Rule will benefit investors. For example, public customers may benefit by receiving executions at a better price or for a greater size than the minimum requirements under the Best Rule. The Commission believes that the proposal also would enhance competition on the Exchange by providing specialists with the opportunity to compete based upon the additional guarantees they offer.

The Commission notes, however, that the Exchange has indicated that this proposal is intended to be an ''enabling rule.'' Accordingly, the Commission expects that the future filings proposing further modifications to MAX will describe in detail the more favorable guarantees being offered. Moreover, the Commission will review such proposals to ensure that they do not detract from order exposure.

The Commission finds good cause for approving amendment No. 1 to the proposed rule change prior to the thirteenth day after the date of publication of notice of filing thereof. The Exchange's original proposal was published in the **Federal Register** for the full statutory period and no comments were received.[9] Amendment No. 1 amends the text of the rule to delete extraneous language and to make clear that the guarantee is not ''promised'' to a particular individual, but provided for issues chosen by the specialist. Moreover, Amendment No. 1 clarifies the intent and scope of the proposed rule change and the options that the Exchange anticipates for the automated system.

IV. Solicitation of Comments

Interested persons are invited to submit written data, views, and arguments concerning Amendment No. 1. Persons making written submissions should file six copies thereof with the Secretary, Securities and Exchange Commission, 450 Fifth Street NW., Washington, D.C. 20549. Copies of the submission, all subsequent amendments, all written statements with respect to the proposed rule change that are filed with the Commission, and all written communications relating to the proposed rule change between the Commission and any person, other than those that may be withheld from the public in accordance with the provisions of 5 U.S.C. § 552, will be available for inspection and copying at the Commission's Public Reference Section, 450 Fifth Street NW., Washington, D.C. 20549. Copies of such filing will also be available for inspection and copying at the principal office of the Exchange. All submissions should refer to File No. SR–CHX–95–08 and should be submitted by June 16, 1995.

V. Conclusion

It Is Therefore Ordered, pursuant to Section 19(b)(2) of the Act,[10] that the proposed rule change (SR–CHX–95–08) is approved.

For the Commission, by the Division of Market Regulation, pursuant to delegated authority.[11]

Margaret H. McFarland,

Deputy Secretary.

[FR Doc. 95–12981 Filed 5–25–95; 8:45 am]

BILLING CODE 8010–01–M

---

[4] *See* letter from David Rusoff, Foley & Lardner, to Glen Barrentine, Senior Counsel, SEC, dated April 12, 1995. Amendment No. 1 amends the text of the proposed rule change and clarifies its intent and scope.

[5] 17 CFR 240.11Ac1–1 (1994).

[6] The Dual Trading System of the Exchange allows the execution of both round-lot and add-lot orders in certain issues assigned to specialists on the Exchange and listed on either the New York Stock Exchange or the American Stock Exchange.

[7] Some examples provided by the Exchange of the different options that may be available to specialists include SuperMAX and, if reactivated, Enhanced MAX. *See* letter from David Rusoff, Foley & Lardner, to Glen Barrentine, Senior Counsel, SEC, dated April 12, 1995.

[8] 15 U.S.C. 78f(b) (1988 & Supp. v 1993).

[9] *See* Securities Exchange Act Release No. 35547 (Mar. 29, 1995), 60 FR 17375 (Apr. 5, 1995).

[10] 15 U.S.C. 78s(b)(2) (1988).

[11] 17 CFR 200.30–34(a)(12) (1004).

SMALL BUSINESS ADMINISTRATION

[Declaration of Disaster Loan Area #2777]

Texas, Declaration of Disaster Loan Area

Dallas, Parker, and Tarrant Counties and the contiguous counties of Collin, Dention, Ellis, Hood, Jack, Johnson, Kaufman, Palo Pinto, Rockwall, and Wise in the State of Texas constitute a disaster area as a result of damages caused by severe storms and flooding which occurred on May 5–8, 1995. Applications for loans for physical damage as a result of this disaster may be filed until the close of business on July 20, 1995 and for economic injury until the close of business on February 20, 1996 at the address listed below: U.S. Small Business Administration, Disaster Area 3 Office, 4400 Amon Carter Blvd., Suit 102, FT. Worth, TX 76155, or other locally announced locations.

The interest rates are:

For Physical Damage:
- Homeowners with credit available elsewhere, 8.000%
- Homeowners without credit available elsewhere, 4.000%
- Businesses with credit available elsewhere, 8.000%
- Businesses and non-profit organizations without credit available elsewhere 4.000%
- Others (including non-profit organizations) with credit available elsewhere, 7.125%

For Economic Injury:
- Businesses and small agricultural cooperatives without credit available elsewhere, 4.000%

The number assigned to this disaster for physical damage is 277706 and for economic injury the number is 852600.

(Catalog of Federal domestic Assistance Program Nos. 59002 and 59008)

Dated: May 19, 1995.

Philip Lader,

Administrator.

[FR Doc. 95–12968 Filed 5–25–95; 8:45 am]

BILLING CODE 8025–01–M

DEPARTMENT OF STATE

[Public Notice 2212]

Overseas Security Advisory Council; Closed Meeting

The Department of State announces a meeting of the U.S. State Department—Overseas Security Advisory Council on Wednesday, June 14, 1995, at the Marriott Hotel in Salt Lake City, Utah. Pursuant to section 10(d) of the Federal Advisory Committee Act and 5 U.S.C. 552b(c) (1) and (4), it has been determined the meeting will be closed to the public. Matters relative to classified national security information as well as privileged commercial information will be discussed. The agenda calls for the discussion of classified and corporate proprietary/security information as well as private sector physical and procedural security policies and protective programs at sensitive U.S. Government and private sector locations overseas.

For more information contact Marsha Thurman, Overseas Security Advisory Council, Department of State, Washington, DC 20522–1003, phone: 202–663–0869.

Dated: May 11, 1995.

Mark Mulvey,

Director of the Diplomatic Security Service.

[FR Doc. 95–12917 Filed 5–25–95; 8:45 am]

BILLING CODE 4710–24–M

DEPARTMENT OF TRANSPORTATION

Coast Guard

[CGD 95–045]

Merchant Marine Personnel Advisory Committee; Meetings

AGENCY: Coast Guard, DOT.

ACTION: Notice of meetings.

SUMMARY: The Merchant Marine Personnel Advisory Committee (MERPAC) and working groups will meet to discuss various issues. Agenda items include discussions of certified instructors, approved training, the National Research Council report, ''Minding the Helm: Marine Navigation and Piloting'', and manning on U.S. vessels. All meetings will be open to the public.

DATES: The working groups will meet on July 13, 1995, from 8:30 a.m. to 4 p.m. The full committee will meet on July 14, 1995, from 9 a.m. to 4 p.m. Written material should be submitted not later than July 5, 1995.

ADDRESSES: The meetings will be held in Room 2415, U.S. Coast Guard Headquarters, 2100 Second Street, SW., Washington, DC 20593. Written material should be submitted to CDR Scott J. Glover, MERPAC Executive Director, Commandant (G–MVP), U.S. Coast Guard, 2100 Second Street SW., Washington, DC 20593.

FOR FURTHER INFORMATION CONTACT: Commander Scott J. Glover, Commandant (G–MVP), U.S. Coast Guard Headquarters, 2100 Second Street, SW., Washington, DC 20593, telephone (202) 267–0224.

SUPPLEMENTARY INFORMATION: Notice of this meeting is given pursuant to the Federal Advisory Committee Act, 5 U.S.C. App. 2 § 1 et seq. The agenda will include discussion of the following topics:

(1) ''Licensing 2000 and Beyond'' recommendations to certify instructors and designated examiners, and to increase the focus on approved training as one of the Coast Guard's guarantors of competency;

(2) National Research Council report, *Minding the Helm: Marine Navigation and Piloting*; and,

(3) Revision of federal laws affecting watchkeeping and manning on U.S. vessels.

Attendance is open to the public. With advance notice, and the Chairman's discretion, members of the public may make oral presentations during the meeting. Persons wishing to make oral presentations should notify the Executive Director, listed above under ''ADDRESSES'', no later than the day before the meeting. Written material may be submitted at any time for presentation to the Committee. However, to ensure advance distribution to each Committee member, persons submitting written material are asked to provide 20 copies to the Executive Director no later than July 5, 1995.

Dated: May 22, 1995.

J.C. Card,

Rear Admiral, U.S. Coast Guard, Chief, Office of Marine Safety, Security and Environmental Protection.

[FR Doc. 95–13023 Filed 5–25–95; 8:45 am]

BILLING CODE 4910–14–M

Notice of Applications for Certificates of Public Convenience and Necessity and Foreign Air Carrier Permits Filed Under Subpart Q During the Week Ended May 19, 1995

The following Applications for Certificates of Public Convenience and Necessity and Foreign Air Carrier Permits were filed under Subpart Q of the Department of Transportation's Procedural Regulations (see 14 CFR 302.1701 *et seq.*). The due date for Answers, Conforming Applications, or Motions to Modify Scope are set forth below for each application. Following the Answer period DOT may process the application by expedited procedures. Such procedures may consist of the adoption of a show-cause order, a tentative order, or in appropriate cases a final order without further proceedings.

Docket Number: 50354.
Date filed: May 15, 1995.

Due Date for Answers, Conforming Applications, or Motion to Modify Scope: June 12, 1995.

Description: Application of United Air Lines, Inc. pursuant to 49 U.S.C. Section 41101, and Subpart Q of the Regulations, applies for renewal of its Certificate of Public Convenience and Necessity for Route 588 authorizing services between Chicago, Illinois and Tokyo, Japan and of the six (6) weekly U.S.-Japan frequencies allocated to United by Order 90–10–15.

Docket Number: 50358.

Date filed: May 18, 1995.

Due Date for Answers, Conforming Applications, or Motion to Modify Scope: June 15, 1995.

Description: Application of Delta Air Lines, Inc., pursuant to 49 U.S.C. Section 41101 and Subpart Q of the Regulations, applies for renewal of its Certificate of Public Convenience and necessity for Route 586, authorizing Delta to engage in foreign air transportation of persons, property and mail between the terminal point Portland, Oregon and the terminal point Nagoya, Japan. Delta's certificate for Route 586 expires on November 15, 1995. Delta requests renewal of its certificate for a period of five years.

Docket Number: 50359.

Date filed: May 18, 1995.

Due Date for Answers, Conforming Applications, or Motion to Modify Scope: June 15, 1995.

Description: Application of Delta Air Lines, Inc. pursuant to 49 U.S.C. Section 41101 and Subpart Q of the Regulations, applies for renewal of its Certificate of Public Convenience and Necessity for Route 585, authorizing Delta to engage in foreign air transportation of persons, property and mail between the terminal point Los Angeles, California and the terminal point Tokyo, Japan.

Docket Number: 50360.

Date filed: May 19, 1995.

Due Date for Answers, Conforming Applications, or Motion to Modify Scope: June 16, 1995.

Description: Application of Seaborne Aviation, Inc., pursuant to 49 U.S.C. Section 41101 and Subpart Q of the Regulations, applies for a certificate of public convenience and necessity for an indefinite term to perform scheduled, interstate air transportation of persons, property and mail between the terminal points of Ketchikan and Waterfall, Alaska.

Paulette V. Twine,

Chief, Documentary Services Division.

[FR Doc. 95–12962 Filed 5–25–95; 8:45 am]

BILLING CODE 4910–62–P

Federal Aviation Administration

[Summary Notice No. PE–95–22]

Petitions for Exemption; Summary of Petitions Received; Dispositions of Petitions Issued

AGENCY: Federal Aviation Administration (FAA), DOT.

ACTION: Notice of petitions for exemption received and of dispositions of prior petitions.

SUMMARY: Pursuant to FAA's rulemaking provisions governing the application, processing, and disposition of petitions for exemption (14 CFR Part 11), this notice contains a summary of certain petitions seeking relief from specified requirements of the Federal Aviation Regulations (14 CFR Chapter I), dispositions of certain petitions previously received, and corrections. The purpose of this notice is to improve the public's awareness of, and participation in, this aspect of FAA's regulatory activities. Neither publication of this notice nor the inclusion or omission of information in the summary is intended to affect the legal status of any petition or its final disposition.

DATE: Comments on petitions received must identify the petition docket number involved and must be received on or before June 15, 1995.

ADDRESSES: Send comments on any petition in triplicate to: Federal Aviation Administration, Office of the Chief Counsel, Attn: Rule Docket (AGC–200), Petition Docket No. _____ 800 Independence Avenue, SW., Washington, DC 20591.

Comments may also be sent electronically to the following internet address:

The petition, any comments received, and a copy of any final disposition are filed in the assigned regulatory docket and are available for examination in the Rules Docket (AGC–200), Room 915G, FAA Headquarters Building (FOB 10A), 800 Independence Avenue, SW., Washington, DC 20591; telephone (202) 267–3132.

FOR FURTHER INFORMATION CONTACT: Mr. D. Michael Smith, Office of Rulemaking (ARM–1), Federal Aviation Administration, 800 Independence Avenue, SW., Washington, DC 20591; telephone (202) 267–7470.

This notice is published pursuant to paragraphs (c), (e), and (g) of § 11.27 of Part 11 of the Federal Aviation Regulations (14 CFR Part 11).

Issued in Washington, DC., on May 22, 1995.

Donald P. Byrne,

Assistant Chief Counsel for Regulations.

Petitions for Exemption

Docket No.: 28197

Petitioner: U.S. Department of Agriculture (Forest Service)

Sections of the FAR Affected: 14 CFR 91.203 and part 125

Description of Relief Sought: To permit the USDA Forest Service to operate its Shorts C–23A Sherpa aircraft to transport passengers and cargo in civil aircraft operations without possessing a current and appropriate airworthiness certificate. Additionally, the request, if granted, would allow the USDA Forest Service to operate its Basler DC–3 aircraft, which have either a seating configuration of 20 or more passenger seats or a payload capacity of 6,000 pounds or more, in civil aircraft operations, without meeting the requirements of part 125.

Dispositions of Petitions

Docket No.: 25126

Petitioner: Executive Air Fleet, Inc.

Sections of the FAR Affected: 14 CFR 135.165(b) (6) and (7)

Description of Relief Sought/Disposition: To extend Exemption No. 4821, as amended, which permits Executive Air Fleet, Inc., to operate turbojet airplanes in extended overwater operations with one long-range navigation system (LRNS) and one high-frequency (HF) communication system within certain named areas subject to certain conditions and limitations.

GRANT, April 20, 1995, Exemption No. 4821D

Docket No.: 27227

Petitioner: World Airways, Inc.

Sections of the FAR Affected: 14 CFR 121.434

Description of Relief Sought/Disposition: To extend Exemption No. 5640, which permits World Airways, Inc., on certain flights, to use flight attendants who have not completed operating experiences under part 121 of the FAR.

GRANT, May 9, 1995, Exemption No. 5640A

Docket No.: 27230

Petitioner: Era Aviation, Inc.

Sections of the FAR Affected: 14 CFR 135.143(c)(2)

Description of Relief Sought/Disposition: To extend Exemption No. 5718, which permits Era Aviation, Inc., to operate certain helicopters without a TSO–C112 (Mode S) transponder, subject to certain conditions and limitations.

GRANT, May 3, 1995, Exemption No. 5718A

Docket No.: 27345

Petitioner: Life Lion Aeromedical Service

Sections of the FAR Affected: 14 CFR 135.213 (a) and (b)

Description of Relief Sought/Disposition: To allow Life Lion Aeromedical Service to conduct instrument flight rule departures during patient transport flights from 13 airports in Pennsylvania when weather observations from the U.S. National Weather Service (NWS), or a source approved by the NWS, or a source approved by the Administrator are not available.

DENIAL, May 3, 1995, Exemption No. 6077

Docket No.: 27822

Petitioner: Milwaukee General Aviation, Inc.

Sections of the FAR Affected: 14 CFR 91.119

Description of Relief Sought/Disposition: To permit Milwaukee General Aviation, Inc., to conduct flights in fixed-wing aircraft at approximately 800 feet above ground level over congested areas in certain meteorological conditions, for the purpose of conducting its aerial traffic observation program.

DENIAL, May 5, 1995, Exemption No. 6079

Docket No.: 27874

Petitioner: The University of Oklahoma

Sections of the FAR Affected: 14 CFR 141.67(a)(2)

Description of Relief Sought/Disposition: To permit The University of Oklahoma to recommend for issuance of pilot's certificates those students who have not completed all appropriate training at the University of Oklahoma.

GRANT, May 16, 1995, Exemption No. 6085

Docket No.: 27907

Petitioner: American Jet International Corporation

Sections of the FAR Affected: 14 CFR 43.3(g)

Description of Relief Sought/Disposition: To allow pilots employed by American Jet International Corporation to reconfigure company airplane cabins as required for particular flights.

GRANT, May 3, 1995, Exemption No. 6078

Docket No.: 28029

Petitioner: Boeing Commercial Airplane Group

Sections of the FAR Affected: 14 CFR 25.841(a) and 25.1447(c)(1)

Description of Relief Sought/Disposition: To allow the Boeing Commercial Airplane Group exemption from the cabin pressure altitude limit requirement of § 25.841(a), as well as the § 25.1447(c)(1) requirement that the passenger oxygen masks be automatically presented before the cabin pressure altitude exceeds 15,000 feet, for Boeing Model 757–200 series airplanes operating into Bamda, China.

GRANT, April 26, 1995, Exemption No. 6076

Docket No.: 28033

Petitioner: Continental Airlines

Sections of the FAR Affected: 14 CFR 121.433(c)(1)(iii), 121.441(a)(1), 121.441(b)(1), and appendix F of part 121

Description of Relief Sought/Disposition: To permit Continental Airlines regulatory relief to the extent necessary to conduct a single visit training program (SVTP) for flight crewmembers, and eventually transition into the Advanced Qualification Program (AQP) codified in Special Federal Aviation Regulation (SFAR) 58.

GRANT, May 11, 1995, Exemption No. 6081

Docket No.: 28092

Petitioner: B2W Corporation

Sections of the FAR Affected: 14 CFR 135.143(c)(2)

Description of Relief Sought/Disposition: To permit B2W to operate without a TSO–C112 (Mode S) transponder installed on its aircraft operating under the provisions of part 135.

GRANT, May 9, 1995, Exemption No. 6083

Docket No.: 28101

Petitioner: Wings West Aviation

Sections of the FAR Affected: 14 CFR 135.143(c)(2)

Description of Relief Sought/Disposition: To permit Wings West Aviation to operate without a TSO–C112 (Mode S) transponder installed on its aircraft operating under the provisions of part 135.

GRANT, May 9, 1995, Exemption No. 6082

Docket No.: 28115

Petitioner: Aero Flight Service, Inc.

Sections of the FAR Affected: 14 CFR 135.143(c)(2)

Description of Relief Sought/Disposition: To permit Aero Flight Service, Inc., to operate without a TSO–C112 (Mode S) transponder installed on its aircraft operating under the provisions of part 135.

GRANT, May 9, 1995, Exemption No. 6084

[FR Doc. 95–13013 Filed 5–25–95; 8:45 am]

BILLING CODE 4910–13–M

Federal Railroad Administration

Petition for Waivers of Compliance

In accordance with 49 CFR 211.9, 211.41 and 211.45, notice is hereby given that the Federal Railroad Administration (FRA) has received a request for a waiver of compliance with certain requirements of the Federal safety laws and regulations. The individual petition is described below, including the party seeking relief, the regulatory provisions involved, the nature of the relief being requested and the petitioner's arguments in favor of relief.

National Railroad Passenger Corporation (Amtrak)

Docket Number H–95–1

Amtrak requests waivers of compliance with certain provisions of the Federal Railroad Administration (FRA) railroad safety regulations. It is seeking relief from sections of Railroad Safety Appliance Standards (49 CFR Part 231), Railroad Safety Glazing Standards (49 CFR Part 223) and Railroad Track Safety Standards (49 CFR Part 213). The relief is being sought in order to demonstrate the IC3 ''Flexiliner'', a three-car, articulated, diesel hydraulic, multiple unit trainset built by ABB Scandia A/S for the Danish State Railway (DSB).

The demonstration is a joint project by Amtrak and ABB Traction, Inc. (ABB), and a number of potential sponsors, including state departments of transportation and commuter agencies. Amtrak is serving as the host agency and is acting as liaison with the FRA. The Flexiliner which will be demonstrated was built for the DSB and is presently in revenue service in Denmark. Modifications will be made to the equipment in Denmark to ensure the trainset meets Amtrak and FRA requirements, where practical.

Amtrak anticipates that the Flexiliner trainset will arrive at the Port of Baltimore in July 1995, and be taken to Washington, DC for commissioning tests. After completion of the tests, it is intended that the Flexiliner will operate across the country and be placed in revenue service in the Portland-Eugene, Oregon corridor. This is contingent upon ABB receiving a contract award from Oregon, following a competitive proposal evaluation. Demonstration runs in Amtrak's Northeast Corridor, at a maximum speed of 110 mph, may be scheduled for dignitaries before shipment to Oregon. The train may also operate in either demonstration service or revenue service between other city pairs in other parts of the country.

The Flexiliner will be comprised of three units. The front and rear unit each have two air cooled diesel engines and hydraulic transmissions. The two bogies of the end units are powered and the trailing bogie supports one end of the intermediate non-powered unit. The train is equipped with spring-loaded parking brakes, which replaces the handbrakes.

Amtrak seeks a temporary waiver from compliance with the Railroad Glazing Standards, Section 223.15 (a) and (b), which requires that all front and rear facing windows on passenger cars must meet the FRA Type I testing criteria and all side facing glazing on passenger cars must meet the FRA Type II testing criteria.

The front and rear facing windshields, manufactured by the Triplex Aircraft and Special Products, Limited (TASP), Birmingham, England, is comprised of three sheets of glazing interlayered with soft PVB resulting in a thickness of approximately 22.9 mm (.916 inch). The front and rear facing glazing material was subjected to the British Railways Board (BRB) Specification No. 566 for Type 2 windows, for locomotives and multiple units operating at speeds up 180 km/hr. The glazing material is designed to resist the penetration into the vehicle of a sharp cornered hollow steel cube having sides of a dimension of 70 to 75 mm (2.76″ to 2.95″) and a mass of .9 kg (≈2 lbs), traveling at a speed of 290 km/hr (≈180 mph) per hour, the window to be vertically mounted in an ambient temperature of not more than 10 degrees C and with the window heater turned off. The result of the impact test was that all glass plies broke, some spalling off inner glass face, small split in PVB interlayer, and no penetration of the missile. The test specimen of TASP glazing adequately met the impact requirements for BRB test No. 566 for Type 2 windows.

The side glazing is manufactured according to the National Standards Institute Code ANSI Z97.1–1984. The side window glazing outer pane is 6 mm (.24″) thick, heat-reflecting (coated), hardened, clear ''Antelio''. The space in between panes is 12 mm (.48″), Argon gas-filled to improve insulation. The inner pane is 4 mm (.16″) thick, specially hardened clear float glass. In general, the ANSI Test Code for Z97.1 simulates the load from a 100 pound person running at a speed of 22 feet/second hitting the glazing. The test is simulated with an impactor made of a punching bag filled with lead shot weighing a total of 100 pounds. The impactor is swung in a pendulum arc from a distance of 12, 18, and 48 inches from the vertically supported glazing test specimen. Interpretation of the test results depends upon the breakage of the test specimen, but the details are not included in this notice. Neither the front and rear facing glazing, nor the side facing glazing materials are in compliance with Part 223 because none of it was tested according to the testing criteria found in Appendix A to Part 223, Certification of Glazing Materials.

Section 223.15(c) requires that each passenger car be equipped with minimum of four (4) emergency [side] windows. The Flexiliner has no emergency side windows per se, and the escape method is to break the windows with emergency hammers strategically located in the passenger compartments. Further, ABB states that wide aisles lead passengers to the four wide entrance doors located in the side of the three unit trainset. The entrance doors are normally electrically activated and pneumatically operated, and in an emergency can be manually opened in the absence of pneumatic pressure or electricity. The two side cab doors at each end of the trainset may also be used as emergency exits.

Amtrak also seeks a temporary waiver from Section 231.12(c), which requires that each passenger car with wide vestibules have two (2) horizontal handholds located near each end on each side of the vestibule end sill. The Flexiliner has no horizontal handholds at either end of the trainset. Modifying the vehicle structure for handholds is impractical for such a short duration test, according to Amtrak.

Section 231.12(d) requires uncoupling levers. The Flexiliner does not have a conventional uncoupling lever, since it was designed to be uncoupled electrically by yard or operating crews. A manually operated emergency lever is provided which does not meet FRA requirements. Amtrak is seeking a temporary waiver because to design and install a manual uncoupling lever is not practical for this [test] program. Further, the Flexiliner has a European style automatic coupler at each end. ABB stated that an adaptor would be provided so that the trainset's automatic coupler can be coupled to a standard AAR coupler.

Amtrak states that during all tests, demonstration service, and revenue service, the train will not exceed the authorized speed for the class of track over which it is operating. However, Amtrak desires to explore cant deficient curving operation of this non-tilt trainset at speeds developing cant deficiency values in excess of the three inch limit defined in the track safety standards. The track safety standards in Section 213.57(b) prescribe a speed limit, not distinguishing between freight and passenger rolling stock, at which trains may operate over curved track as a function of curve radius (curvature) and the installed superelevation. In the general case, for any combination of curvature and superelevation there is a specific (''balanced'') speed at which the effect of centrifugal force is cancelled and in the case of passenger cars the result is passenger insensitivity to actual curve negotiation. This is an ideal outcome for passenger trains which usually operate considerably faster than freight trains and, as a consequence, would demand greater superelevation to produce the balanced effect. The track standards permit the operation of trains on curves at speeds producing a conservative underbalance (or, put another way, ''cant deficiency'') in line with historic industry practice. On the other hand, successful passenger train operation in many places overseas is predicated on curve negotiation at train speeds developing significantly higher cant deficiencies than permitted by the U.S. track regulations. This practice has been followed abroad without incident for many years. State railroad authorities in Western Europe and Japan approved curving speeds for specifically designed rolling stock that produce cant deficiencies at the upper end of the acceptable range without passengers incurring centrifugal force-induced discomfort (for a detailed discussion of cant deficiency, see 52 FR 38035, October 13, 1987).

Amtrak and FRA have worked together in the conduct of cant-deficiency-related analyses for four trainsets of foreign origin up to now. In its petition, Amtrak outlines the now standard procedural steps it intends to take in arriving at a safety qualification of the IC3 trainset in the mode of cant deficient operation at values above three inches. If the petition is granted it would be FRA's responsibility to assure that Amtrak follows these procedures rigorously in this case just as was done in the past.

Interested parties are invited to participate in this proceeding by submitting written views, data, or comments. FRA does not anticipate scheduling a public hearing in connection with this proceeding since the facts do not appear to warrant a hearing. If any interested party desires an opportunity for oral comment, they should notify FRA, in writing, before the end of the comment period and specify the basis for their request.

All communications concerning these proceedings should identify the appropriate docket number (e.g., Waiver Petition Docket Number H–95–1) and

must be submitted in triplicate to the Docket Clerk, Office of Chief Counsel, Federal Railroad Administration, Nassif Building, 400 Seventh Street, S.W., Washington, D.C., 20590. Communications received by July 1, 1995 will be considered before final action is taken. Comments received after that date will be considered as far as practicable.

All written communications concerning these proceedings are available for examination during regular business hours (9 a.m.–5 p.m.) in Room 8201, Nassif Building, 400 Seventh Street, S.W., Washington, D.C. 20590.

Issued in Washington, D.C. on May 23, 1995.

Phil Olekszyk,

Deputy Associate Administrator for Safety Compliance and Program Implementation.

[FR Doc. 95–13018 Filed 5–25–95; 8:45 am]

BILLING CODE 4910–06–M

DEPARTMENT OF THE TREASURY

Public Information Collection Requirements Submitted to OMB for Review

May 18, 1995.

The Department of Treasury has submitted the following public information collection requirement(s) to OMB for review and clearance under the Paperwork Reduction Act of 1980, Public Law 96–511. Copies of the submission(s) may be obtained by calling the Treasury Bureau Clearance Officer listed. Comments regarding this information collection should be addressed to the OMB reviewer listed and to the Treasury Department Clearance Officer, Department of the Treasury, Room 2110, 1425 New York Avenue, NW., Washington, DC 20220.

Bureau of Alcohol, Tobacco and Firearms (BATF)

OMB Number: 1512–0119.

Form Number: ATF F 2149/2150 (5200.14).

Type of Review: Extension.

Title: Notice of Removal of Tobacco Products, Cigarette Papers, or Cigarette Tubes.

Description: Tobacco manufacturers or export warehouse proprietors are liable for tax on tobacco products on their premises. Tobacco products, cigarette papers and tubes may be removed without payment of tax, for specific and verifiable purposes. This form documents and verifies these removals.

Respondents: Business or other for-profit.

Estimated Number of Respondents: 314.

Estimated Burden Hours Per Respondent: 15 minutes.

Frequency of Response: On occasion.

Estimated Total Reporting Burden: 21,195 hours.

OMB Number: 1512–0162.

Form Number: ATF F 3067 (5210.9).

Type of Review: Extension.

Title: Inventory—Manufacturer of Tobacco Products.

Description: This form is necessary to determine the beginning and ending inventories of tobacco products at the premises of a tobacco products manufacturer. The inventory is recorded on this form by the proprietor and is used to determine tax liability, compliance with regulations and for protection of the revenue.

Respondents: Business or other for-profit.

Estimated Number of Respondents: 34.

Estimated Burden Hours Per Respondent: 30 minutes.

Frequency of Response: On occasion.

Estimated Total Reporting Burden: 170 hours.

OMB Number: 1512–0345.

Recordkeeping Requirement ID Number: ATF REC 5150/12.

Type of Review: Extension.

Title: Manufacturers Recovering Taxpaid Alcohol.

Description: Apothecaries, pharmacists and manufacturers of certain nonbeverage products may use and recover taxpaid alcohol in the manufacture of such products. The manufacturer then may claim drawback of the taxpaid on the alcohol used. Records of the recovered spirits protect against duplication of claims or diversion to beverage use.

Respondents: Business or other for-profit.

Estimated Number of Recordkeepers: 20.

Estimated Burden Hours Per Recordkeeper: 90 hours.

Frequency of Response: On occasion.

Estimated Total Recordkeeping Burden: 1,800 hours.

OMB Number: 1512–0358.

Recordkeeping Requirement ID Number: ATF REC 5210/1.

Type of Review: Extension.

Title: Tobacco Products Manufacturers—Records of Operations.

Description: Tobacco Products manufacturers must maintain a system of records that provide accountability over the tobacco products received and produced. Needed to ensure tobacco transactions to be traced, and ensure that tax liabilities have been satisfied.

Respondents: Business or other for-profit.

Estimated Number of Recordkeepers: 101.

Estimated Burden Hours Per Recordkeeper: 150 hours.

Frequency of Response: Other.

Estimated Total Recordkeeping Burden: 15,150 hours.

OMB Number: 1512–0363.

Recordkeeping Requirement ID Number: ATF REC 5210/6.

Type of Review: Extension.

Title: Tobacco Products Manufacturers—Supporting Records for Removals for the Use of the United States.

Description: Use of Tobacco Products Manufacturers to record removals of tobacco products for the use of the United States. Used by ATF to verify that removal was tax exempt. Needed to maintain accountability over removals; allows transactions to be traced. Protects tax revenue.

Respondents: Business or other for-profit.

Estimated Number of Recordkeepers: 101.

Estimated Burden Hours Per Recordkeeper: 5 hours.

Frequency of Response: Other.

Estimated Total Recordkeeping Burden: 505 hours.

OMB Number: 1512–0368.

Recordkeeping Requirement ID Number: ATF REC 5230/1.

Type of Review: Extension.

Title: Tobacco Products Importer or Manufacturer—Records of Large Cigar Wholesale Prices.

Description: Used by tobacco products importers or manufacturers who import or make large cigars. Records needed to verify wholesale prices on those cigars; tax is based on those prices. Ensures that all tax revenues due the government are collected.

Respondents: Business or other for-profit.

Estimated Number of Recordkeepers: 108.

Estimated Burden Hours Per Recordkeeper: 2 hours, 20 minutes.

Frequency of Response: Other.

Estimated Total Recordkeeping Burden: 252 hours.

OMB Number: 1512–0391.

Recordkeeping Requirement ID Number: ATF REC 5210/10.

Type of Review: Extension.

Title: Tobacco—Record of Disposition More Than 60,000 Cigarettes in a Single Transaction.

Description: Records must be maintained by Tobacco Products manufacturers and cigarette distributors showing details of large cigarette transactions; used to trace the

movement of contraband cigarettes. Helps curtail illicit traffic in cigarettes between states.

Respondents: Business or other for-profit.

Estimated Number of Recordkeepers: 9,500.

Estimated Burden Hours Per Recordkeeper: 120 hours.

Frequency of Response: Other.

Estimated Total Recordkeeping Burden: 1,140,000 hours.

Clearance Officer: Robert N. Hogarth (202) 927–8930, Bureau of Alcohol, Tobacco and Firearms, Room 3200, 650 Massachusetts Avenue, N.W., Washington, DC 20226.

OMB Reviewer: Milo Sunderhauf (202) 395–7340, Office of Management and Budget, Room 10226, New Executive Office Building, Washington, DC 20503.

Lois K. Holland,

Departmental Reports Management Officer.

[FR Doc. 95–12932 Filed 5–25–95; 8:45 am]

BILLING CODE 4810–31–P

Public Information Collection Requirements Submitted to OMB for Review

May 18, 1995.

The Department of Treasury has submitted the following public information collection requirement(s) to OMB for review and clearance under the Paperwork Reduction Act of 1980, Public Law 96–511. Copies of the submission(s) may be obtained by calling the Treasury Bureau Clearance Officer listed. Comments regarding this information collection should be addressed to the OMB reviewer listed and to the Treasury Department Clearance Officer, Department of the Treasury, Room 2110, 1425 New York Avenue, NW., Washington, DC 20220.

Internal Revenue Service (IRS)

OMB Number: 1545–1342.

Form Number: IRS Form W–5.

Type of Review: Revision.

Title: Earned Income Credit Advance Payment Certificate.

Description: Form W–5 is used by employees to see if they are eligible for the earned income credit and to request part of the credit in advance with their pay. Eligible employees who want advance payments must give Form W–5 to their employers.

Respondents: Individuals or households.

Estimated Number of Respondents/Recordkeepers: 35,200.

Estimated Burden Hours Per Respondent/Recordkeeper:

Recordkeeping, 7 min.

Learning about the law or the form, 9 min.

Preparing the form, 27 min.

Frequency of Response: Annually.

Estimated Total Reporting/Recordkeeping Burden: 24,992 hours.

Clearance Officer: Garrick Shear (202) 622–3869, Internal Revenue Service, Room 5571, 1111 Constitution Avenue, N.W., Washington, DC 20224.

OMB Reviewer: Milo Sunderhauf (202) 395–7340, Office of Management and Budget, Room 10226, New Executive Office Building, Washington, DC 20503.

Lois K. Holland,

Departmental Reports Management Officer.

[FR Doc. 95–12931 Filed 5–25–95; 8:45 am]

BILLING CODE 4830–01–P

Public Information Collection Requirements Submitted to OMB for Review

May 19, 1995.

The Department of Treasury has submitted the following public information collection requirement(s) to OMB for review and clearance under the Paperwork Reduction Act of 1980, Public Law 96–511. Copies of the submission(s) may be obtained by calling the Treasury Bureau Clearance Officer listed. Comments regarding this information collection should be addressed to the OMB reviewer listed and to the Treasury Department Clearance Officer, Department of the Treasury, Room 2110, 1425 New York Avenue, NW., Washington, DC 20220.

Internal Revenue Service (IRS)

OMB Number: 1545–1318.

Regulation ID Number: INTL–0018–92 NPRM.

Type of Review: Extension.

Title: Earnings and Profits of Foreign Corporations.

Description: Application of the proposed regulations may result in accounting method changes which ordinarily require the filing of Form 3115. However, the proposed regulations waive this filing requirement if certain conditions are met, with the net result that no burdens are imposed.

Respondents: Business or other for-profit.

Estimated Number of Respondents: 1.

Estimated Burden Hours Per Respondent: 1 hour.

Frequency of Response: On occasion.

Estimated Total Reporting Burden: 1 hour.

Clearance Officer: Garrick Shear (202) 622–3869, Internal Revenue Service, Room 5571, 1111 Constitution Avenue, N.W., Washington, DC 20224.

OMB Reviewer: Milo Sunderhauf (202) 395–7340, Office of Management and Budget, Room 10226, New Executive Office Building, Washington, DC 20503.

Lois K. Holland,

Departmental Reports Management Officer.

[FR Doc. 95–12933 Filed 5–25–95; 8:45 am]

BILLING CODE 4830–01–M

Public Information Collection Requirements Submitted to OMB for Review

May 15, 1995.

The Department of Treasury has submitted the following public information collection requirement(s) to OMB for review and clearance under the Paperwork Reduction Act of 1980, Public Law 96–511. Copies of the submission(s) may be obtained by calling the Treasury Bureau Clearance Officer listed. Comments regarding this information collection should be addressed to the OMB reviewer listed and to the Treasury Department Clearance Officer, Department of the Treasury, Room 2110, 1425 New York Avenue, NW., Washington, DC 20220.

Special Request: In order to conduct the focus group interviews described below in a timely manner, the Department of Treasury is requesting Office of Management and Budget (OMB) review and approval of this information collection by May 25, 1995. To obtain a copy of this survey, please write to the IRS Clearance Officer at the address listed below.

Internal Revenue Service (IRS)

OMB Number: 1545–1432.

Project Number: PC:V 95–007–G.

Type of Review: Revision.

Title: Focus Group Interviews for Gathering Records.

Description: The objective of the study is to gather taxpayers' opinions on the burden associated with learning which records are needed, and gathering and maintaining the necessary records for the purpose of filing their Federal tax returns. Results of these focus groups will help IRS identify what they can do to decrease the burden of recordkeeping.

Respondents: Individuals or households, Business or other for-profit.

Estimated Number of Respondents: 57.

Estimated Burden Hours Per Respondent:

Interview, 2 hours.

Travel time, 1 hour.

Frequency of Response: Other.

Estimated Total Reporting Burden: 292 hours.

Clearance Officer: Garrick Shear (202) 622–3869, Internal Revenue Service, Room 5571, 1111 Constitution Avenue, N.W., Washington, DC 20224.

OMB Reviewer: Milo Sunderhauf (202) 395–7340, Office of Management and Budget, Room 10226, New Executive Office Building, Washington, DC 20503.

Lois K. Holland,

Departmental Reports Management Officer

[FR Doc. 95–12936 Filed 5–25–95; 8:45am]

BILLING CODE: 4830–01–P

Public Information Collection Requirements Submitted to OMB for Review

May 15, 1995.

The Department of Treasury has submitted the following public information collection requirement(s) to OMB for review and clearance under the Paperwork Reduction Act of 1980, Public Law 96–511. Copies of the submission(s) may be obtained by calling the Treasury Bureau Clearance Officer listed. Comments regarding this information collection should be addressed to the OMB reviewer listed and to the Treasury Department Clearance Officer, Department of the Treasury, Room 2110, 1425 New York Avenue, NW., Washington, DC 20220.

Special Request: In order to conduct the focus group interviews described below in a timely manner, the Department of Treasury is requesting Office of Management and Budget (OMB) review and approval of this information collection by May 25, 1995. To obtain a copy of this survey, please write to the IRS Clearance Officer at the address listed below.

Internal Revenue Service (IRS)

OMB Number: 1545–1432.

Project Number: PC:V 95–009–G.

Type of Review: Revision.

Title: 1995 IRS Small Business Customer Satisfaction Survey.

Description: The purpose of this survey to collect information from small businesses (owners, partners, and corporate officials) in order to determine their opinions about the quality of service provided by the IRS and to understand the relative importance they place on the various aspects of quality service. Information from this survey will be used for three major reasons: (1) to assess satisfaction with the IRS' performance; (2) to assess the IRS's progress against the benchmark 1994 survey; and (3) to guide development of strategic actions to improve customer satisfaction.

Respondents: Business or other for-profit.

Estimated Number of Respondents: 2,000.

Estimated Burden Hours Per Respondent: 15 minutes.

Frequency of Response: Other.

Estimated Total Reporting Burden: 500 hours.

Clearance Officer: Garrick Shear (202) 622–3869, Internal Revenue Service, Room 5571, 1111 Constitution Avenue, N.W., Washington, DC 20224.

OMB Reviewer: Milo Sunderhauf (202) 395–7340, Office of Management and Budget, Room 10226, New Executive Office Building, Washington, DC 20503.

Lois K. Holland,

Departmental Reports Management Officer

[FR Doc. 95–12937 Filed 5–25–95; 8:45am]

BILLING CODE: 4830–01–P

Public Information Collection Requirements Submitted to OMB for Review

May 16, 1995.

The Department of Treasury has submitted the following public information collection requirement(s) to OMB for review and clearance under the Paperwork Reduction Act of 1980, Public Law 96–511. Copies of the submission(s) may be obtained by calling the Treasury Bureau Clearance Officer listed. Comments regarding this information collection should be addressed to the OMB reviewer listed and to the Treasury Department Clearance Officer, Department of the Treasury, Room 2110, 1425 New York Avenue, NW., Washington, DC 20220.

Internal Revenue Service (IRS)

OMB Number: 1545–0042.

Form Number: IRS Form 970.

Type of Review: Extension.

Title: Application to Use Last-In, First-Out (LIFO) Inventory Method.

Description: Form 970 is filed by individuals, partnerships, trusts, estates, or corporations to elect to use the LIFO inventory method or to extend the LIFO inventory method to additional goods. The IRS uses Form 970 to determine if the election was properly made.

Respondents: Business or other for-profit, Individuals or households, Farms.

Estimated Number of Respondents/ Recordkeepers: 3,000.

Estimated Burden Hours Per Respondent/Recordkeeper:

Recordkeeping, 8 hr., 37 min.

Learning about the law or the form, 1 hr., 35 min.

Preparing the form, 1 hr., 48 min.

Frequency of Response: On occasion.

Estimated Total Reporting/ Recordkeeping Burden: 36,000 hours.

OMB Number: 1545–0055.

Form Number: IRS Form 1001.

Type of Review: Extension.

Title: Ownership, Exemption, or Reduced Rate Certificate.

Description: This form is used by owners of certain types of income to report to a withholding agent, both the ownership and any reduced or exempt tax rate under tax conventions or treaties, and if appropriate, to claim a release of tax withheld at source. The withholding agent uses the information to determine the appropriate withholding.

Respondents: Individuals or households, Business or other for-profit.

Estimated Number of Respondents/ Recordkeepers: 100,000.

Estimated Burden Hours Per Respondent/Recordkeeper:

Recordkeeping, 4 hr., 32 min.

Learning about the law or the form, 1 hr., 0 min.

Preparing and sending the form to the IRS, 1 hr., 7 min.

Frequency of Response: On occasion.

Estimated Total Reporting/ Recordkeeping Burden: 665,000 hours.

OMB Number: 1545–0240.

Form Number: IRS Form 6118.

Type of Review: Extension.

Title: Claim of Income Tax Return Preparers.

Description: Form 6118 is used by preparers to file for a refund of penalties incorrectly charged. The information enables the IRS to process the claim and have the refund issued to the tax return preparer.

Respondents: Individuals or households, Business or other for-profit.

Estimated Number of Respondents/ Recordkeepers: 10,000.

Estimated Burden Hours Per Respondent/Recordkeeper:

Recordkeeping, 13 min.

Learning about the law or the form, 11 min.

Preparing the form, 8 min.

Copy, assembling, and sending the form to the IRS, 20 min.

Frequency of Response: On occasion.

Estimated Total Reporting/ Recordkeeping Burden: 8,900 hours.

OMB Number: 1545–0242.

Form Number: IRS Form 6197.

Type of Review: Extension.

Title: Gas Guzzler Tax.

Description: Form 6197 is used to compute the gas guzzler tax on automobiles whose fuel economy does not meet certain standards for fuel economy. The tax is reported quarterly on Form 720. Form 6197 is filed each

quarter with Form 720 for manufacturers. Individuals can make a one-time filing if they import a gas guzzler auto for personal use. The IRS uses the information to verify computation of the tax and compliance with the law.

Respondents: Individuals or households, Business or other for-profit.

Estimated Number of Respondents/ Recordkeepers: 485.

Estimated Burden Hours Per Respondent/Recordkeeper:

Recordkeeping, 4 hr., 18 min.

Learning about the law or the form, 12 min.

Preparing and sending the form to the IRS, 17 min.

Frequency of Response: Quarterly, Annually.

Estimated Total Reporting/ Recordkeeping Burden: 2,892 hours.

OMB Number: 1545–0715.

Form Number: IRS Form 1099–B.

Type of Review: Extension.

Title: Proceeds From Broker and Barter Exchange Transactions.

Description: Form 1099–B is used by brokers and barter exchanges to report proceeds from transactions to the Internal Revenue Service.

Respondents: Individuals or households.

Estimated Number of Respondents: 50,000.

Estimated Burden Hours Per Respondent: 15 minutes.

Frequency of Response: Annually.

Estimated Total Reporting Burden: 12,925,000 hours.

OMB Number: 1545–0895.

Form Number: IRS Form 3800.

Type of Review: Extension.

Title: General Business Credit.

Description: Internal Revenue Code (IRC) section 38 permits taxpayers to reduce their income tax liability by the amount of their general business credit, which is an aggregation of their investment credit, jobs credit, alcohol fuel credit, research credit, low-income housing credit, disabled access credit, enhanced oil recovery credit, etc. Form 3800 is used to figure the correct credit.

Respondents: Business or other for-profit, Farms.

Estimated Number of Respondents/ Recordkeepers: 247,500.

Estimated Burden Hours Per Respondent/Recordkeeper:

Recordkeeping, 11 hr., 43 min.

Learning about the law or the form, 1 hr., 0 min.

Preparing and sending the form to the IRS, 1 hr., 14 min.

Frequency of Response: Annually.

Estimated Total Reporting/ Recordkeeping Burden: 3,452,625 hours.

OMB Number: 1545–0930.

Form Number: IRS Form 8396.

Type of Review: Extension.

Title: Mortgage Interest Credit.

Description: Form 8396 is used by individual taxpayers to claim a credit against their tax for a portion of the interest paid on a home mortgage in connection with a qualified mortgage credit certificate. Internal Revenue Code (IRC) section 25 allows the credit and IRC section 163(g) provides that the interest deduction on Schedule A will be reduced by the credit.

Respondents: Individuals or households.

Estimated Number of Respondents/ Recordkeepers: 30,000.

Estimated Burden Hours Per Respondent/Recordkeeper:

Recordkeeping, 46 min.

Learning about the law or the form, 6 min.

Preparing the form, 42 min.

Copying, assembling, and sending the form to the IRS, 20 min.

Frequency of Response: Annually.

Estimated Total Reporting/ Recordkeeping Burden: 54,300 hours.

OMB Number: 1545–0971.

Form Number: IRS Form 1041–ES.

Type of Review: Extension.

Title: Estimated Income Tax for Estates and Trusts.

Description: Form 1041–ES is used by fiduciaries of estates and trusts to make estimated tax payments if their estimated tax is $500 or more. IRS uses the data to credit taxpayers' accounts and to determine if the estimated tax has been properly computed and timely paid.

Respondents: Business or other for-profit.

Estimated Number of Respondents/ Recordkeepers: 300,000.

Estimated Burden Hours Per Respondent/Recordkeeper:

Recordkeeping, 20 min.

Learning about the law or the form, 8 min.

Preparing the form, 1 hr., 16 min.

Copying, assembling, and sending the form to the IRS, 20 min.

Frequency of Response: Quarterly, Annually.

Estimated Total Reporting/ Recordkeeping Burden: 2,484,000 hours.

OMB Number: 1545–1010.

Form Number: IRS Form 1120–RIC.

Type of Review: Extension.

Title: U.S. Income Tax Return for Regulated Investment Companies.

Description: Form 1120–RIC is filed by a domestic corporation electing to be taxed as a RIC in order to report its income and deductions and to compute its tax liability. IRS uses Form 1120–RIC to determine whether the RIC has correctly reported its income, deductions, and tax liability.

Respondents: Business or other for-profit.

Estimated Number of Respondents/ Recordkeepers: 3,277.

Estimated Burden Hours Per Respondent/Recordkeeper:

Recordkeeping, 58 hr., 10 min.

Learning about the law or the form, 17 hr., 49 min.

Preparing the form, 34 hr., 25 min.

Copying, assembling, and sending the form to the IRS, 4 hr., 17 min.

Frequency of Response: Annually.

Estimated Total Reporting/ Recordkeeping Burden: 372,562 hours.

OMB Number: 1545–1054.

Form Number: IRS Form 8736.

Type of Review: Extension.

Title: Application for Automatic Extension of Time To File U.S. Return for a Partnership, REMIC, or for Certain Trusts.

Description: Form 8736 is used by partnerships, REMICs, and by certain trusts to request automatic 3-month extension of time to file Form 1065, Form 1041, or Form 1066. Form 8736 contains data needed by the IRS to determine whether or not a taxpayer qualifies for such an extension.

Respondents: Business or other for-profit, Farms.

Estimated Number of Respondents/ Recordkeepers: 36,000.

Estimated Burden Hours Per Respondent/Recordkeeper:

Recordkeeping, 3 hr., 7 min.

Learning about the law or the form, 24 min.

Preparing, copying, assembling, and sending the form to the IRS, 28 min.

Frequency of Response: Annually.

Estimated Total Reporting/ Recordkeeping Burden: 142,920 hours.

OMB Number: 1545–1190.

Form Number: IRS Form 8824.

Type of Review: Extension.

Title: Like-Kind Exchanges.

Description: Form 8824 is used by individuals, corporations, partnerships, and other entities to report the exchange of business or investment property, and the deferral of gains from such transactions under section 1031. It is also used to report the deferral of gain under section 1043 by members of the executive branch of the Federal government.

Respondents: Individuals or households, Business or other for profit.

Estimated Number of Respondents/ Recordkeepers: 200,000.

Estimated Burden Hours Per Respondent/Recordkeeper:

Recordkeeping, 26 min.

Learning about the law or the form, 28 min.

Preparing the form, 1 hr., 2 min.

Copying, assembling, and sending the form to the IRS, 27 min.

Frequency of Response: Annually.

Estimated Total Reporting/ Recordkeeping Burden: 353,884 hours.

Clearance Officer: Garrick Shear (202) 622–3869, Internal Revenue Service, Room 5571, 1111 Constitution Avenue, NW., Washington, DC 20224.

OMB Reviewer: Milo Sunderhauf (202) 395–7340, Office of Management and Budget, Room 10226, New Executive Office Building, Washington, DC 20503.

Lois K. Holland,

Departmental Reports Management Officer.

[FR Doc. 95–12938 Filed 5–25–95; 8:45 am]

BILLING CODE 4830–01–P

UNITED STATES INFORMATION AGENCY

Culturally Significant Objects Imported for Exhibition; Determination

Notice is hereby given of the following determination: Pursuant to the authority vested in me by the act of October 19, 1965 (79 Stat. 985, 22 U.S.C. 2459), Executive Order 12047 of March 27, 1978 (43 FR 13359, March 29, 1979), and Delegation Order No. 85–5 of June 27, 1985 (50 FR 27393, July 2, 1985), I hereby determine that the objects to the included in the exhibit ''MINGEI: Japanese Folk Art from the Montgomery Collection'' (see list*), imported from abroad for the temporary exhibition without profit within the United States, are of cultural significance. These objects are imported pursuant to a loan agreement with a foreign lender. I also determine that the temporary exhibition or display of the listed exhibit objects at The Frick Art Museum, Pittsburgh, Pennsylvania, beginning on or about June 15, 1995, to on or about August 27, 1995; at the Cincinnati Art Museum, Cincinnati, Ohio, beginning on or about October 1, 1995, to on or about January 1, 1996; at the Meadows Museum, Southern Methodist University, Dallas, Texas, beginning on or about August 22, 1996, to on or about October 6, 1996; at the Flint Institute; Fling, Michigan, beginning on or about October 20, 1996, to on or about December 8, 1996; at the Society of Four Arts, Palm Beach, Florida, beginning on or about January 10, 1997, to on or about February 10, 1997; at the Fresno Metropolitan Museum, Fresno, California, beginning on or about September 13, 1997, to on or about November 30, 1997, and at other locations as yet to be determined, is in the national interest.

Public notice of this determination is ordered to be published in the **Federal Register**.

Dated: May 23, 1995.

Les Jin,

General Counsel.

[FR Doc. 95–13091 Filed 5–25–95; 8:45 am]

BILLING CODE 8230–01–M

* A copy of this list may be obtained by contacting Lorie J. Nierenberg of the Office of the General Counsel, U.S. Information Agency. The telephone number is 202/619–6084; the address is U.S.I.A., 301–4th Street, S.W., Room 700, Washington, D.C. 20547.

Culturally Significant Objects Imported for Exhibition; Determination

Notice is hereby given of the following determination: Pursuant to the authority vested in me by the act of October 19, 1965 (79 Stat. 985, 22 U.S.C. 2459), Executive Order 12047 of March 27, 1978 (43 FR 13359, March 29, 1978), and Delegation Order No. 85–5 of June 27, 1985 (50 FR 27393, July 2, 1985), I hereby determine that the objects to be included in the exhibit ''THE GOLDEN AGE OF DANISH ART: Drawings from the Royal Museum of Fine Arts Copenhagen'' (see list*), imported from abroad for the temporary exhibition without profit within the United States, are of cultural significance. These objects are imported pursuant to a loan agreement with a foreign lender. I also determine that the temporary exhibition or display of the listed exhibit objects at The Frick Collection, New York, New York, beginning on or about June 13, 1995, to on or about August 13, 1995; at the Frick Art Museum, Pittsburgh, Pennsylvania, beginning on or about September 8, 1995, to on or about October 22, 1995; and at the Crocker Art Museum, Sacramento, California, beginning on or about January 18, 1996, to on or about March 10, 1996, is in the national interest.

Public notice of this determination is ordered to be published in the **Federal Register**.

Dated: May 23, 1995.

Les Jin,

General Counsel.

[FR Doc. 95–13092 Filed 5–25–95; 8:45 am]

BILLING CODE 8230–01–M

* A copy of this list may be obtained by contacting Lorie J. Nierenberg of the Office of the General Counsel, U.S. Information Agency. The telephone number is 202/619–6084; the address is U.S.I.A., 301–4th Street, S.W., Room 700, Washington, D.C. 20547.

Sunshine Act Meetings

Federal Register
Vol. 60, No. 102
Friday, May 26, 1995

This section of the FEDERAL REGISTER contains notices of meetings published under the "Government in the Sunshine Act" (Pub. L. 94-409) 5 U.S.C. 552b(e)(3).

UNITED STATES INTERNATIONAL TRADE COMMISSION

TIME AND DATE: June 12, 1995 at 10:00 a.m.

PLACE: Room 101, 500 E Street S.W. Washington, DC 20436.

STATUS: Open to the public.

MATTERS TO BE CONSIDERED:

1. Agenda for future meeting
2. Minutes
3. Ratification List
4. Inv. Nos. 731–TA–732–733 (Preliminary) (Circular Welded Non-Alloy Steel Pipe from Romania and South Africa)
5. Outstanding action jackets: none

In accordance with Commission policy, subject matter listed above, not disposed of at the scheduled meeting, may be carried over to the agenda of the following meeting.

Issued: May 23, 1995.

Donna R. Koehnke,

Secretary.

[FR Doc. 95–13145 Filed 5–24–95; 8:45 am]

BILLING CODE 7020–02–P

UNITED STATES INTERNATIONAL TRADE COMMISSION

TIME AND DATE: June 29, 1995 at 2:30 p.m.

PLACE: Room 101, 500 E Street S.W., Washington, DC 20436.

STATUS: Open to the public.

MATTERS TO BE CONSIDERED:

1. Agenda for future meeting
2. Minutes
3. Ratification List
4. Inv. No. 731–TA–706 (Canned Pineapple Fruit from Thailand)—briefing and vote.
5. Outstanding action jackets: none

In accordance with Commission policy, subject matter listed above, not disposed of at the scheduled meeting, may be carried over to the agenda of the following meeting.

Issued: May 23, 1995.

Donna R. Koehnke,

Secretary.

[FR Doc. 95–13146 Filed 5–24–95; 2:12 pm]

BILLING CODE 7020–02–P

POSTAL RATE COMMISSION

TIME AND DATE: 2:00 p.m., May 30, 1995.

PLACE: Conference Room, 1333 H Street, NW., Suite 300, Washington, DC 20268.

STATUS: Closed.

MATTERS TO BE CONSIDERED: Docket No. R94–1 On Reconsideration.

CONTACT PERSON FOR MORE INFORMATION: Margaret P. Crenshaw, Secretary, Postal Rate Commission, Suite 300, 1333 H Street, NW., Washington, DC 20268–0001, Telephone (202) 789–6840.

Margaret P. Crenshaw,

Secretary.

[FR Doc. 95–13184 Filed 5–24–95; 8:45 am]

BILLING CODE 7710–FW–P

UNITED STATES POSTAL SERVICE BOARD OF GOVERNORS

Notice of a Meeting

The Board of Governors of the United States Postal Service, pursuant to its Bylaws (39 C.F.R. Section 7.5) and the Government in the Sunshine Act (5 U.S.C. Section 552b), hereby gives notice that it intends to hold a meeting at 10:00 a.m. on Monday, June 5, 1995, and at 9:00 a.m. on Tuesday, June 6, 1995, in Austin, Texas.

The June 5 meeting is closed to the public. (See 60 FR 24673, May 9, 1995, and 60 FR 27151, May 22, 1995.) The June 6 meeting is open to the public and will be held at The Four Seasons Hotel, 98 San Jacinto Boulevard, in the San Jacinto Ballroom. The Board expects to discuss the matters stated in the agenda which is set forth below. Requests for information about the meeting should be addressed to the Secretary for the Board, David F. Harris, at (202) 268–4800.

Agenda

Monday Session

June 5—10:00 a.m. (Closed)

1. Consideration of Additional Funding Request for the Chicago, Illinois, Processing & Distribution Center. (Rudolph K. Umscheid, Vice President, Facilities)
2. Briefing on the Acquisition of Leased Postal Facilities. (Mr. Umscheid)
3. Consideration of Changes in International Mail Rates. (John F. Alepa, Manager, Pricing, Marketing Systems)

Tuesday Session

June 6—9:00 a.m. (Open)

1. Minutes of the Previous Meeting, May 1–2, 1995.
2. Remarks of the Postmaster General/Chief Executive Officer. (Marvin Runyon)
3. Postal Inspection Service Semiannual Report. (Kenneth J. Hunter, Chief Postal Inspector)
4. Capital Investments.
   a. South River, New Jersey, Material Distribution Center. (Final Decision, Rudolph K. Umscheid, Vice President, Facilities)
   b. 47 Small Parcel and Bundle Sorters (Information Briefing). (William J. Dowling, Vice President, Engineering)
5. Briefing on the International Business Unit. (James F. Grubiak, Executive Director, International Postal Relations)
6. Report on the Southwest Area. (Charles K. Kernan, Vice President, Southwest Area Operations)
7. Tentative Agenda for the July 10–11, 1995, meeting in Washington, D.C.

David F. Harris,

Secretary.

[FR Doc 95–13062 Filed 5–24–95; 9:33 am]

BILLING CODE 7710–12–M

Corrections

Federal Register

Vol. 60, No. 102

Friday, May 26, 1995

This section of the FEDERAL REGISTER contains editorial corrections of previously published Presidential, Rule, Proposed Rule, and Notice documents. These corrections are prepared by the Office of the Federal Register. Agency prepared corrections are issued as signed documents and appear in the appropriate document categories elsewhere in the issue.

DEPARTMENT OF HEALTH AND HUMAN SERVICES

Food and Drug Administration

[Docket No. 95M–0057]

Medtronic CardioRhythm; Premarket Approval of Atakr Radio Frequency Catheter Ablation System

Correction

In notice document 95–10429 appearing on page 20999 in the issue of Friday, April 28, 1995, make the following correction:

In the second column, in the second full paragraph, beginning in the second line, ''(*insert date 30 days after date of publication in the* **Federal Register**) should read ''May 30, 1995''.

BILLING CODE 1505–01–D

LIBRARY OF CONGRESS

Copyright Office

37 CFR Part 201

Digital Audio Recording Devices and Media: Access to and Confidentiality of Statements of Account and Verification Audit Filings

Correction

In rule document 95–12012 beginning on page 25995 in the issue of Tuesday, May 16, 1995, make the following correction:

Appendix [Corrected]

On page 25999, in the third column, in paragraph (2), in the fourth line, ''important'' should read ''importing''.

BILLING CODE 1505–01–D

OFFICE OF PERSONNEL MANAGEMENT

5 CFR Part 890

RIN 3206-AG31

Federal Employees Health Benefits Program: Limitation on Physician Charges and FEHB Program Payments

Correction

In rule document 95–12169 beginning on page 26667 in the issue of Thursday, May 18, 1995, make the following correction:

§ 890.905 [Corrected]

1. On page 26668, in the second column, in § 890.905, in paragraph (b), in the second line, ''for'' should read ''from''.

2. On the same page, in the same column, in § 890.905, in paragraph (c), in the fifth line, following ''amount'' insert ''determined''.

BILLING CODE 1505–01–D

SECURITIES AND EXCHANGE COMMISSION

[Release No. 34-35710; File No. SR-Phlx-95-14]

Self-Regulatory Organizations; Notice of Filing of Proposed Rule Change and Amendment No. 1 of Proposed Rule Change by the Philadelphia Stock Exchange, Inc., Relating to Extension of Market Marker Margin Treatment to Certain Market Marker Orders Entered From Off the Trading Floor

Correction

In notice document 95–12259 beginning on page 26754 in the issue of Thursday, May 18, 1995, make the following correction:

On page 26756, in the second column, before the FR document line, the signature line was omitted and should have appeared as follows:

Margaret H. McFarland,

Deputy Secretary.

BILLING CODE 1505–01–D

SECURITIES AND EXCHANGE COMMISSION

[Investment Company Act Release No. 21066; 811-5691]

Value Line Intermediate Bond Fund; Notice of Application

Correction

In notice document 95–12316 beginning on page 26913 in the issue of Friday, May 19, 1995, make the following correction:

On page 26913, in the first column, in the heading, above the entry for **AGENCY**, the date ''May 12, 1995.'' should appear.

BILLING CODE 1505–01–D

federal register

Friday
May 26, 1995

Part II

Federal Emergency Management Agency

Changes to the Hotel and Motel Fire Safety Act National Master List; Notice

FEDERAL EMERGENCY MANAGEMENT AGENCY

Changes to the Hotel and Motel Fire Safety Act National Master List

AGENCY: United States Fire Administration, FEMA.

ACTION: Notice.

SUMMARY: The Federal Emergency Management Agency (FEMA or Agency) gives notice of additions and corrections/changes to, and deletions from, the national master list of places of public accommodations which meet the fire prevention and control guidelines under the Hotel and Motel Fire Safety Act.

EFFECTIVE DATE: June 26, 1995.

ADDRESSES: Comments on the master list are invited and may be addressed to the Rules Docket Clerk, Federal Emergency Management Agency, 500 C Street, SW., room 840, Washington, D.C. 20472, (fax) (202) 646–4536. To be added to the National Master List, or to make any other change to the list, please see Supplementary Information below.

FOR FURTHER INFORMATION CONTACT: John Ottoson, Fire Management Programs Branch, United States Fire Administration, Federal Emergency Management Agency, National Emergency Training Center, 16825 South Seton Avenue, Emmitsburg, MD 21727, (301) 447–1272.

SUPPLEMENTARY INFORMATION: Acting under the Hotel and Motel Fire Safety Act of 1990, 15 U.S.C. 2201 note, the United States Fire Administration has worked with each State to compile a national master list of all of the places of public accommodation affecting commerce located in each State that meet the requirements of the guidelines under the Act. FEMA published the national master list in the **Federal Register** on Friday, December 2, 1994, 59 FR 61932, with corrections published Monday, February 27, 1995, 60 FR 10636, and published changes approximately monthly since then.

Parties wishing to be added to the National Master List, or to make any other change, should contact the State office or official responsible for compiling listings of properties which comply with the Hotel and Motel Fire Safety Act. A list of State contacts was published in 59 FR 50132 on September 30, 1994. If the published list is unavailable to you, the State Fire Marshal's office can direct you to the appropriate office. Periodically FEMA will update and redistribute the national master list to incorporate additions and corrections/changes to the list, and deletions from the list, that are received from the State offices.

Each update contains or may contain three categories: ''Additions;'' ''Corrections/changes;'' and ''Deletions.'' For the purposes of the updates, the three categories mean and include the following:

''Additions'' are either names of properties submitted by a State but inadvertently omitted from the initial master list or names of properties submitted by a State after publication of the initial master list;

''Corrections/changes'' are corrections to property names, addresses or telephone numbers previously published or changes to previously published information directed by the State, such as changes of address or telephone numbers, or spelling corrections; and

''Deletions'' are entries previously submitted by a State and published in the national master list or an update to the national master list, but subsequently removed from the list at the direction of the State.

Copies of the national master list and its updates may be obtained by writing to the Government Printing Office, Superintendent of Documents, Washington, DC 20402–9325. When requesting copies please refer to stock number 069–001–00049–1.

The update to the national master list follows below.

Dated: May 22, 1995.

John P. Carey,

General Counsel.

HOTEL AND MOTEL FIRE SAFETY ACT NATIONAL MASTER LIST 05/17/95 UPDATE

Index/Property name	PO Box/Rt. No. and street address	City	State/Zip	Telephone
ADDITIONS				
AL0241 HAMPTON INN	1488 THRASHER BLVD	ATHENS	AL 35611	(205) 232–0030
AL0246 SUPER 8 BIRMINGHAM NORTH	624 DECATUR HWY	BIRMINGHAM	AL 35068	(205) 841–2200
AL0244 RAMADA LIMITED	1317 HWY. 67 E	DECATUR	AL 35603	(205) 353–0333
AL0245 SHONEY'S INN BIRMINGHAM HOMEWOOD.	226 SUMMIT PKWY	HOMEWOOD	AL 35209	(205) 916–0464
AL0240 ECONO LODGE UNIVERSITY	3772 UNIVERSITY DR	HUNTSVILLE	AL 35816	(205) 534–7061
AL0242 HAMPTON INN	32988 PERDIDO BEACH BLVD.	ORANGE BEACH	AL 36561	(334) 981–6242
AL0243 HOLIDAY INN SHEFFIELD	4900 HATCH BLVD	SHEFFIELD	AL 35660	(205) 381–4710
AL0239 COMFORT INN	4501 MCFARLAND BLVD. E	TUSCALOOSA	AL 35405	(205) 345–1434
AZ:				
AZ0254 WAHWEAP LODGE AND MARINA.	PO BOX 1597, 100 LAKESHORE DRIVE.	PAGE	AZ 86040	(520) 645–2433
KY:				
KY0416 HATFIELD INN	640 SECOND STREET	CENTRAL CITY	KY 42330	(502) 754–1224
KY0414 DAYS INN OF HAZARD	359 MORTON BLVD	HAZARD	KY 41701	(606) 436–1900
KY0417 COMFORT INN	4447 ASHTON AVE	LOUISVILLE	KY 40216	(502) 361–5008
MO:				
MO0301 BOXCAR WILLIE MOTEL #II	360 SCHAFFER DR	BRANSON	MO 65616	(417) 336–3837
MO0305 FRIENDSHIP INN	3015 GREEN MOUNTAIN DRIVE.	BRANSON	MO 65616	(417) 335–4248
MO0296 HAMPTON INN-WEST	36950W. HWY 76	BRANSON	MO 65616	(417) 337–5762
MO0294 QUALITY INN-76 COUNTRY MUSIC BLVD.	245 JESS JO PRKWY	BRANSON	MO 65616	(417) 336–6288
MO0299 WELK RESORT CENTER	1984 STATE HIGHWAY 165	BRANSON	MO 65616	(417) 336–3575
MO0306 HOLIDAY INN CLAYTON PLAZA.	7730 BONHOMME AVENUE	CLAYTON	MO 63105	(314) 863–0400
MO0297 RAMADA INN	3320 RANGELINE	JOPLIN	MO 64804	(417) 781–0500

HOTEL AND MOTEL FIRE SAFETY ACT NATIONAL MASTER LIST 05/17/95 UPDATE—Continued

Index/Property name	PO Box/Rt. No. and street address	City	State/Zip	Telephone
MO0304 HOLIDAY INN CITI CENTRE	1215 WYNADOTTE STREET	KANSAS CITY	MO 64105	(816) 471–1333
MO0302 BEST WESTERN UNIVERSITY INN.	2817 SOUTH MAIN	MARYVILLE	MO 64468	(816) 562–2002
MO0300 MARYVILLE SUPER 8 MOTEL	222 SUMMIT DRIVE	MARYVILLE	MO 64468	(816) 582–8088
MO0298 STUDIO PLUS AT WESTPORT	2030 CRAIG RD	ST LOUIS	MO 63146	(314) 576–3001
MO0295 COMFORT INN WENTZVILLE	1400 CONTINENTAL DR	WENTZVILLE	MO 63385	(314) 327–5515
MS:				
MS0095 DAYS INN	RT 3 BOX 16, HWY 49 NORTH.	COLLINS	MS 39428	(601) 765–6531
MS0094 CABOT LODGE HATTIESBURG.	6541 HWY 49	HATTIESBURG	MS 39401	(601) 264–1881
MS0093 WILSON INN—JACKSON	310 GREYMONT AVE	JACKSON	MS 39202	(601) 944–466
ND:				
ND0081 COUNTRY SUITES BY CARLSON.	3316 13TH AVE. S	FARGO	ND 58103	(701) 234–0565
ND0080 GLADSTONE SELECT HOTEL	112 NE 2	JAMESTOWN	ND 58401	(701) 252–0700
NE:				
NE0113 RAMADA INN-KEARNEY	110 S SECOND AV	KEARNEY	NE 68847	(308) 237–5971
NE0112 DAYS INN-SIDNEY	3042 SILVERBERG DR	SIDNEY	NE 69162	(308) 254–2121
NY:				
NY0611 HOWARD JOHNSON LODGE	450 MORELAND ROAD	COMMACK	NY 11725	(516) 864–8820
NY0612 COMFORT INN CARRIER CIRCLE.	6491 THOMPSON ROAD	SYRACUSE	NY 13206	(315) 437–0222
OK:				
OK0100 COMFORT INN EAST	5653 TINKER DIAGONAL	MIDWEST CITY	OK 73110	(405) 733–1339
TN:				
TN0276 HOLIDAY INN CHATTANOOGA WEST.	3800 CUMMINGS HWY	CHATTANOOGA	TN 37419	(615) 821–3531
TN0274 KING'S LODGE MOTEL	2400 WESTSIDE DR	CHATTANOOGA	TN 37404	(615) 698–8944
TN0275 CLUBHOUSE INN KNOXVILLE	208 MARKET PLACE LN	KNOXVILLE	TN 37922	(615) 531–1900
TX:				
TX0639 SUPER 8 MOTEL & RV PARK	3800 IH 20 E	EASTLAND	TX 76448	(817) 629–2336
TX0638 COMFORT INN	1906 HOUSTON HWY	VICTORIA	TX 77901	(512) 574–9393
VA:				
VA0630 DAYS INN—MILITARY CIRCLE	5701 CHAMBERS ST	NORFOLK	VA 23502	(804) 461–0100
CORRECTIONS/CHANGES				
AL:				
AL0005 QUALITY INN UNIVERSITY CENTER.	1577 S. COLLEGE ST	AUBURN	AL 36830	(334) 821–7001
AL0207 RAMADA INN	3001 ROSS CLARK CIR	DOTHAN	AL 36301	(334) 792–0031
AL0158 RODEWAY INN	7725 MOBILE HWY	HOPE HULL	AL 36043	(334) 281–7151
AL0118 ADAM'S MARK HOTEL	64 S. WATER ST	MOBILE	AL 36602	(334) 438–4000
AL0097 MIDTOWN ECONO LODGE	1 S. BELTLINE HWY	MOBILE	AL 36606	(334) 479–5333
AL0194 THE DOWNTOWNER	PO BOX 519, HWY 21 S.	MONROEVILLE	AL 36480	(334) 575–3101
AL0209 HOLIDAY INN ANNISTON OXFORD.	215 HWY. 78 & AL 21 S	OXFORD	AL 36203	(205) 831–3410
AZ:				
AZ0206 SUPER 8 MOTEL	1105 E. SHELDON ST	PRESCOTT	AZ 86301	(602) 776–1282
KS:				
KS0001 SUPER 8 MOTEL, INC ABILENE.	2207 N. BUCKEYE	ABILENE	KS 67410	(913) 263–4545
KS0009 SUPER 8 MOTEL COLBY	1040 ZELFER AVE	COLBY	KS 67701	(913) 462–8248
KS0109 ECONO LODGE LANSING	504 N. MAIN ST	LANSING	KS 66043	(913) 727–2777
KS0050 SUPER 8 LIBERAL	747 E. PANCAKE	LIBERAL	KS 67901	(316) 624–8880
KS0051 INN 4 LESS LYONS	817 W. MAIN	LYONS	KS 67554	(316) 257–5185
KS0056 RED COACH INN INC	2111 E. KANSAS	MCPHERSON	KS 67460	(316) 241–2460
KS0154 CLUB HOUSE INN	10610 MARTY	OVERLAND PARK	KS 662120000.	(913) 648–5555
KS0074 SUPER 8 PRATT	PO BOX 347, 1906 E. 1ST	PRATT	KS 67124	(316) 672–5945
KS0157 CLUB HOUSE INN	924 SOUTH WEST HENDERSON.	TOPEKA	KS 666150000.	(913) 273–8888
KS0116 COMFORT INN TOPEKA	1518 SW WANAMAKER RD	TOPEKA	KS 66604	(913) 273–5365
KS0117 DAYS INN TOPEKA	1510 SW WANAMAKER RD	TOPEKA	KS 66604	(913) 222–8538
KS0086 HERITAGE HOUSE	3535 SW 6TH	TOPEKA	KS 66606	(913) 233–3800
KS0087 SUPER 8 MOTEL TOPEKA	5968 SW 10TH	TOPEKA	KS 66604	(913) 273–5100
KS0141 CLUB HOUSE INN WICHITA	515 S. WEBB RD	WICHITA	KS 67207	(316) 684–1111
KS0108 MARRIOTT WICHITA	9100 CORPORATE HILLS DR	WICHITA	KS 67207	(316) 651–0333
KY:				
KY0374 QUALITY MOTEL	4646 SCOTTSVILLE RD	BOWLING GREEN	KY 42101	(502) 843–1163
KY0412 COMFORT SUITES	1918 W. 192 BY-PASS REGENCY PK.	LONDON	KY 40741	(606) 877–7848

HOTEL AND MOTEL FIRE SAFETY ACT NATIONAL MASTER LIST 05/17/95 UPDATE—Continued

Index/Property name	PO Box/Rt. No. and street address	City	State/Zip	Telephone
MO:				
MO0254 COMFORT INN—NORTH	2550 NORTH GLENSTONE	SPRINGFIELD	MO 65803	(417) 866–5255
MS:				
MS0013 RAMADA INN—UNIVERSITY	PO BOX 2201, W. JACKSON AVE.	OXFORD	MS 38655	(601) 234–7013
NE:				
NE0087 HAWTHORN SUITES	11025 M ST	OMAHA	NE 68137	(402) 331–0101
VA:				
VA0547 ECONO LODGE CHESAPEAKE BEACH.	2968 SHORE DRIVE	VIRGINIA BEACH	VA 23451	(804) 481–0666
DELETIONS				
AL:				
AL0223 ECONO LODGE UNIVERSITY	3772 UNIVERSITY DR	DECATUR	AL 35603	(205) 353–8194
MS:				
MS0055 LA FONT INN	PO BOX 2703, DENNY AVE	PASCAGOULA	MS 39568	(601) 762–7111
VA:				
VA0465 ECONO LODGE CHESAPEAKE BEACH.	2968 SHORE DRIVE	VIRGINIA BEACH	VA 23451	(804) 481–0666

[FR Doc. 95–12943 Filed 5–25–95; 8:45 am]
BILLING CODE 6718–26–U

federal register

Friday
May 26, 1995

Part III

Department of Agriculture

Cooperative State Research, Education, and Extension Service

Small Business Innovation Research Grants Program for Fiscal Year 1996; Solicitation of Applications; Notice

DEPARTMENT OF AGRICULTURE

Cooperative State Research, Education, and Extension Service

Small Business Innovation Research Grants Program for Fiscal Year 1996; Solicitation of Applications

Notice is hereby given that under the authority of the Small Business Innovation Development Act of 1982 (Pub. L. 97–219), as amended (15 U.S.C. 638) and Section 630 of the Act making appropriations for Agriculture, Rural Development, and Related Agencies programs for fiscal year ending September 30, 1987, and for other purposes, as made applicable by Section 101(a) of Public Law 99–591, 100 Stat. 3341, the U.S. Department of Agriculture (USDA) expects to award project grants for certain areas of research to science-based small business firms through Phase I of its Small Business Innovation Research (SBIR) Grants Program. This program will be administered by the Office of Grants and Program Systems, Cooperative State Research, Education, and Extension Service. Firms with strong scientific research capabilities in the topic areas listed below are encouraged to participate. Objectives of the three-phase program include stimulating technological innovation in the private sector, strengthening the role of small businesses in meeting Federal research and development needs, increasing private sector commercialization of innovations derived from USDA-supported research and development efforts, and fostering and encouraging participation of women-owned and socially and economically disadvantaged small business concerns in technological innovation.

The total amount expected to be available for Phase I of the SBIR Program in fiscal year 1996 is approximately $3,500,000. The solicitation is being announced to allow adequate time for potential recipients to prepare and submit applications by the closing date of September 1, 1995. The research to be supported is in the following topic areas:

1. Forests and Related Resources
2. Plant Production and Protection
3. Animal Production and Protection
4. Air, Water and Soils
5. Food Science and Nutrition
6. Rural and Community Development
7. Aquaculture
8. Industrial Applications
9. Marketing and Trade

The award of any grants under the provisions of this solicitation is subject to the availability of appropriations.

This program is subject to the provisions found at 7 CFR Part 3403, as amended. These provisions set forth procedures to be followed when submitting grant proposals, rules governing the evaluation of proposals and the awarding of grants, and regulations relating to the post-award administration of grant projects. In addition, USDA Uniform Federal Assistance Regulations, as amended (7 CFR Part 3015), Governmentwide Debarment and Suspension (Non-procurement) and Governmentwide Requirements for Drug-free Workplace (Grants) (7 CFR Part 3017), New Restrictions on Lobbying (7 CFR Part 3018), and Managing Federal Credit Programs (7 CFR Part 3) apply to this program. Copies of 7 CFR Part 3403, 7 CFR Part 3015, 7 CFR Part 3017, 7 CFR Part 3018, and 7 CFR Part 3 may be obtained by writing or calling the office indicated below.

The solicitation, which contains research topic descriptions and detailed instructions on how to apply, may be obtained by writing or calling the office indicated below. Please note that applicants who submitted SBIR proposals for fiscal year 1995 or who have recently requested placement on the list for fiscal year 1996 will automatically receive a copy of the fiscal year 1996 solicitation.

Proposal Services Branch, Awards Management Division, Cooperative State Research, Education, and Extension Service, U.S. Department of Agriculture, Ag Box 2245, Washington, D.C. 20250–2245, Telephone: (202) 401–5048.

Done at Washington, D.C., this 22nd day of May 1995.

William D. Carlson,

Acting Administrator, Cooperative State Research, Education, and Extension Service.

[FR Doc. 95–13002 Filed 5–25–95; 8:45 am]

BILLING CODE 3410–22–M

Reader Aids

Federal Register

Vol. 60, No. 102

Friday, May 26, 1995

INFORMATION AND ASSISTANCE

Federal Register

Index, finding aids & general information	**202–523–5227**
Public inspection announcement line	**523–5215**
Corrections to published documents	**523–5237**
Document drafting information	**523–3187**
Machine readable documents	**523–4534**

Code of Federal Regulations

Index, finding aids & general information	**523–5227**
Printing schedules	**523–3419**

Laws

Public Laws Update Service (numbers, dates, etc.)	**523–6641**
Additional information	**523–5230**

Presidential Documents

Executive orders and proclamations	**523–5230**
Public Papers of the Presidents	**523–5230**
Weekly Compilation of Presidential Documents	**523–5230**

The United States Government Manual

General information	**523–5230**

Other Services

Data base and machine readable specifications	**523–4534**
Guide to Record Retention Requirements	**523–3187**
Legal staff	**523–4534**
Privacy Act Compilation	**523–3187**
Public Laws Update Service (PLUS)	**523–6641**
TDD for the hearing impaired	**523–5229**

ELECTRONIC BULLETIN BOARD

Free **Electronic Bulletin Board** service for Public Law numbers, Federal Register finding aids, and list of documents on public inspection. **202–275–0920**

FAX-ON-DEMAND

You may access our Fax-On-Demand service. You only need a fax machine and there is no charge for the service except for long distance telephone charges the user may incur. The list of documents on public inspection and the daily Federal Register's table of contents are available using this service. The document numbers are 7050-Public Inspection list and 7051-Table of Contents list. The public inspection list will be updated immediately for documents filed on an emergency basis.
NOTE: YOU WILL ONLY GET A LISTING OF DOCUMENTS ON FILE AND NOT THE ACTUAL DOCUMENT. Documents on public inspection may be viewed and copied in our office located at 800 North Capitol Street, N.W., Suite 700. The Fax-On-Demand telephone number is: **301–713–6905**

FEDERAL REGISTER PAGES AND DATES, MAY

21033–21424.....1
21425–21698.....2
21699–21972.....3
21973–22246.....4
22247–22454.....5
22455–24534.....8
24535–24760.....9
24761–25118.....10
25119–25600.....11
25601–25838.....12
25839–25982.....15
25983–26338.....16
26339–26666.....17
26667–26822.....18
26823–26976.....19
26977–27220.....22
27221–27400.....23
27401–27656.....24
27657–27866.....25
27867–28026.....26

CFR PARTS AFFECTED DURING MAY

At the end of each month, the Office of the Federal Register publishes separately a List of CFR Sections Affected (LSA), which lists parts and sections affected by documents published since the revision date of each title.

3 CFR

Proclamations:
6763 (Modified by 6804).....27657
6767 (Modified by 6804).....27657
6778.....25266
6792.....21423
6793.....21696
6794.....21971
6795.....22247
6796.....22453
6797.....25839
6798.....25841
6799.....26337
6800.....26339
6801.....26975
6802.....27219
6803.....27399
6804.....27657
6805.....27865

Executive Orders:
12473 (See E.O. 12960).....26647
12484 (See E.O. 12960).....26647
12550 (See E.O. 12960).....26647
12586 (See E.O. 12960).....26647
12613 (Revoked in part by E.O. 12959).....24757
12708 (See E.O. 12960).....26647
12767 (See E.O. 12960).....26647
12888 (See E.O. 12960).....26647
12936 (See E.O. 12960).....26647
12957 (Revoked in part by E.O. 12959).....24757
12959.....24757
12960 of May 12, 1995.....26647

Administrative Orders:
Presidential Determinations:
No. 95–18 of April 21, 1995.....22447
No. 95–19 of April 21, 1995.....22449
No. 95–20 of May 1, 1995.....22245
Memorandums:
May 17, 1995.....27395
May 19, 1995.....27663
Notices:
May 10, 1995.....25599

5 CFR

Ch. XXI.....22249
185.....22249
532.....22455, 26341
630.....22455, 26977
890.....21590, 26667, 28019
1603.....24535

Proposed Rules:
591.....25150
870.....21759
871.....21759
872.....21759
873.....21759
874.....21759
1601.....27908

7 CFR

6.....21425
28.....21033
52.....26823
75.....21034
110.....25119
300.....27665
319.....27665
354.....24535
400.....21035
404.....26669
457.....25601
704.....22456
723.....22458, 27867
911.....24537
915.....24537
946.....27682
956.....27624
958.....24539
981.....26342
989.....26344, 26346
998.....26348
1036.....22255
1410.....22456
1421.....27868
1464.....21036, 22458, 27867
1468.....22460
1494.....21037
1924.....24540
1980.....26350, 26980

Proposed Rules:
11.....27044
29.....25624, 27912
278.....25625
300.....27428
319.....27428
354.....27437
1007.....25014
1099.....25628
1205.....21999
1910.....25629
1944.....25629
1951.....25629
1965.....25629
3200.....25594
3411.....25594

8 CFR

3....26351
103....21979
208....21973
210....21973
212....26676, 27598
214....21979
240....21973
242....21973
245....26676
245a....21039, 21973
247a....21973
248....26676

Proposed Rules:

1....24573
13....24573
103....24573, 25856
208....24573
235....26696
242....24573
264....27441
299....25856

9 CFR

78....24547
85....26353
92....25119, 26355
94....21428, 25120
98....25119, 26355
113....24547

Proposed Rules:

3....27049
50....26377
51....26377
77....26377
78....26377
92....25151
98....25151
101....26381
112....24584
113....24584, 26381, 26384
130....27913
308....22311, 25869
310....22311, 25869
318....22311, 25869
320....22311, 25869
325....22311, 25869
326....22311, 25869
327....22311, 25869
381....22311, 25869

10 CFR

2....22461, 24549
11....26355
19....24549
20....24549, 25983
25....26355
30....24549
32....24549
40....24549
50....24549
51....22461, 24549
54....22461
60....24549
61....24549
70....24549
71....24549
72....24549
73....24549
74....24549
76....24549
150....24549

Proposed Rules:

50....22010
73....24803
430....27051, 27442

12 CFR

25....22156
35....27401
203....22156, 22223
228....22156
265....22256
308....24761
345....22156
563e....22156
614....27401
615....27401
618....27401
620....27684
707....21699, 25121

Proposed Rule:

Ch. XVII....25174
704....27240
741....27240
1710....25162

13 CFR

116....27870
123....22495

Proposed Rule:

121....27924
122....22311

14 CFR

25....26357
29....26823
39....21041, 21429, 21976, 21977, 21979, 22496, 22498, 22499, 22501, 24553, 24762, 25122, 25124, 25604, 25606, 25608, 25610, 25611, 25985, 26683, 26824, 27005, 27007, 27008, 27016, 27018, 27020, 27023, 27402, 27403, 27684, 27686, 27871, 27873
71....21433, 21434, 21700, 24555, 24556, 26594, 27405, 27688, 27689, 27874, 27875, 27876, 27878
91....25980
97....25125, 27127, 25128
121....24765
1215....25843
1245....21042

Proposed Rules:

39....21053, 21054, 21056, 21470, 21471, 21772, 21774, 22011, 22013, 24587, 24589, 25869, 26003, 26005, 26007, 26697, 26700, 26702, 26846, 27054, 27056, 27058, 27446, 27449, 27704, 27705, 27926
71....21473, 21776, 24592, 24593, 24594, 24595, 25175, 25871, 26384, 26385, 27451, 27452
91....25554
135....27707
221....26848

15 CFR

730....25268
732....25268
734....25268
736....25268
738....25268
740....25268
742....25268
744....25268
746....25268
748....25268
750....25268
752....25268
754....25268
756....25268
758....25268
760....25268
762....25268
764....25268
766....25268
768....25268
770....25268
772....25268
774....25268
799....25480

Proposed Rules:

292....25872

16 CFR

305....27690
309....26926
1000....26824

Proposed Rules:

400....27240
402....27241
404....27242
413....27243
417....27244
418....24245
444....24805

17 CFR

1....25988
5....25988
31....25988
202....26604
211....24968
228....26604
229....26604
230....26604
232....26604, 27691
239....26604
240....26604
270....26604
274....26604

18 CFR

2....22257, 22503, 27878
34....22503, 27882
35....22257, 22503
41....22503
131....22503
292....22503
294....22503
382....22503
385....22503

19 CFR

7....21043
11....21043
12....21043
18....21043
19....21043
24....21043
54....21043
101....21043
102....21043
111....21043
114....21043
123....21043
128....21043
132....21043
134....21043
141....21043
145....21043
146....21043
148....21043
151....21043
152....21043
177....21043
181....21043
191....21043
353....25130
355....25130

Proposed Rules:

10....22312, 27378
12....22312, 27378
101....25176
102....22312, 27378
134....22312
177....22312
162....21778
201....26851

20 CFR

217....21982
232....22261
344....22261
625....25560
641....26574
655....26970

Proposed Rules:

416....26387
702....22537
703....22537

21 CFR

5....24766, 26825
16....27406
172....21700
178....22269
436....27221
442....27221
520....26359, 26826
522....26359, 27223
1270....27406

Proposed Rules:

146....26853
173....21474
201....26853
310....21590
500....24808
582....24808
589....24808
896....26854

22 CFR

94....25843

24 CFR

200....21936
203....21936
3500....24734

Proposed Rules:

Ch. IX....21058
10....27058
950....24597
966....27058
990....24597

26 CFR

1....21435, 25140

Proposed Rules:

1....21475, 21482, 21779, 26854, 27453
301....24811, 24813

27 CFR

Proposed Rules:

9....27060

28 CFR

Proposed Rules:
2....26010
16....27933
550....27692

29 CFR

Ch. II....27856
18....26970
24....26970
89....26574
100....22269
270....27856
2619....25843
2676....25843
Proposed Rules:
452....26388
1910....27707
1915....27707
1926....22539, 27707
2200....21058

30 CFR

906....25846
935....25140, 25613
944....21435
Proposed Rules:
250....25178
925....27708
931....22332
934....21484, 27246
935....25660
946....25185
948....26855
950....26704

31 CFR

247....25990
413....27882

32 CFR

706....22505, 22507, 22508, 22509, 22510, 22511, 27025, 27026, 27027
Proposed Rules:
199....26705
203....27460

33 CFR

100....21982, 24557, 27885, 27886
110....21983, 27695
117....26686
164....24767
165....24557, 24558, 26687, 26688, 27406, 27696, 27887, 27888
Proposed Rules:
84....24598
100....25187, 27933
117....22014, 24599, 26710
165....25189, 26012, 27463, 27598
183....25191
322....21061

34 CFR

78....27223
208....27223
215....27223
230....27223
232....27223
233....27223
234....27223
236....27223
238....27223
241....27223
245....27223
246....27223
247....27223
250....27223
251....27223
252....27223
253....27223
254....27223
255....27223
256....27223
257....27223
258....27223
282....27223
298....27223
346....27223
347....27223
354....27223
362....27223
372....27223
374....27223
405....27223
407....27223
408....27223
409....27223
414....27223
416....27223
417....27223
418....27223
419....27223
422....27223
423....27223
424....27223
445....27223
462....27223
463....27223
471....27223
473....27223
474....27223
475....27223
476....27223
500....27223
501....27223
520....27223
524....27223
525....27223
526....27223
537....27223
538....27223
548....27223
555....27223
561....27223
573....27223
574....27223
581....27223
629....27223
665....27223
671....27223
673....27223
690....21438
691....27223
698....27223
700....27223
706....27223
707....27223
708....27223
722....27223
750....27223
755....27223
757....27223
758....27223
760....27223
761....27223
762....27223
763....27223
768....27223
773....27223
778....27223
779....27223
790....27223
Proposed Rules:
200....21400
201....21400
203....21400
205....21400
212....21400

36 CFR

1258....26827
Proposed Rules:
7....26857
242....24601
701....26392

37 CFR

1....21043, 21438, 25615, 27598
10....21438
201....25995, 28019
202....21983
Proposed Rules:
1....27934
2....27934
7....27934

38 CFR

3....27407, 27409
20....25850
Proposed Rules:
3....22016, 25877
17....25191
21....21486

39 CFR

111....22270
Proposed Rules:
3001....22017

40 CFR

9....25492, 26510, 27598
52....21440, 21442, 21445, 21447, 21451, 21453, 21455, 21456, 21702, 21703, 21706, 21707, 21713, 21717, 22240, 22241, 22274, 22277, 22283, 22284, 22285, 22287, 22289, 22512, 22515, 22518, 27028, 27409, 27411, 27889, 27891, 27893
63....27598
70....21720, 25143
72....26510
75....26510, 26560
80....21724
81....21456, 22289, 25146, 27028
82....21682, 24676, 24970
131....22228, 22229
180....24782, 24784, 24785, 24788, 26360, 26361, 26626, 27414, 27415, 27417, 27419, 27421
185....26361
186....26361
228....25147
260....25492
261....25492, 25619
262....25492
264....25492, 26828
265....25492, 26828
266....25492
268....25492
270....25492, 26828
271....22524, 24790, 26828
273....25492
300....27041, 27697, 27896
302....25619
721....26690
763....27697
Proposed Rules:
51....26710, 27943
52....21487, 21488, 21489, 21490, 21780, 21781, 21783, 22334, 22335, 22336, 22337, 22540, 22541, 24813, 26858, 27463, 27464, 27943, 27944, 27945
55....27945
60....27943
61....27943
64....27943
70....26013, 27064
71....27945
72....26559
75....26559
81....21490, 22336, 22337
82....21490, 25010
86....27468
156....21965
170....21944, 21948, 21953, 21955, 21960
180....21725, 21728, 21731, 21733, 21734, 21736, 21784, 27468
185....21736, 21786, 24815
186....24815
228....25192
281....26859
300....21491, 21786
439....21592

41 CFR

201–23....22019
201–24....22019

42 CFR

2....22296
6....22530
406....22533
421....21048

43 CFR

Public Land Orders:
7138....21984
7139....22535
7140....24560
7141....24792
7142....25149
Proposed Rules:
11....24604, 27247

44 CFR

64....21739, 27226
65....26363, 26364, 26365, 26367
67....26368
Proposed Rules:
67....26393

45 CFR

60....27898
96....21332
205....26373
224....26373
233....26373

238....26373
239....26373
240....26373
282....26373
1010....26374
1050....26374
1060....26374
1061....26374
1064....26374
1067....26374
1068....26374
1069....26374
1070....26374
1076....26374
1397....26000
1355....26829
1356....26829

Proposed Rules:

1385....26774
1386....26774
1387....26774
1388....26774

46 CFR

15....24763
50....24767
52....24767
56....24767
58....24767
61....24767
111....24767
381....24560
501....27228, 27698
502....27228
503....27228
504....27228
514....27228
515....27228
550....27228
552....27228
560....27228
572....27228
580....27228
581....27228
582....27228
583....27228

Proposed Rules:

25....24748
28....24748
30....24748
31....24748
35....24748
37....24748
40....24748
54....24748
55....24748
56....24748
61....24748
70....24748
71....24748
72....24748
76....24748
78....24748
79....24748
90....24748
91....24748
95....24748
97....24748
99....24748
106....24748
150....24748
154....24748
174....24748
188....24748
189....24748
514....27248

47 CFR

2....21048
13....27699
15....21984, 27423
24....26375
73....22298, 22535, 22536, 25851, 25852, 27042, 27899
76....21464
90....21984, 21987
97....26000

Proposed Rules:

Ch. 1....27945
1....26860
20....26861
25....24817
32....26402
73....22021, 22022, 22541, 24606, 25879, 26018, 26402, 26711, 26712, 27471
90....22023
95....25193
97....25194, 25661

48 CFR

502....21467
506....21467
513....21467
552....21467
926....22298
952....22298
970....22298
1503....21993
1505....21993
1513....21993
1514....21993
1515....21993
1522....21993
1525....21993
1542....21993
1552....21993
1852....22095
5452....21992

Proposed Rules:

31....27471
32....25794
45....22442
52....22442
219....22035
970....27069
1803....27710
1815....27710
1852....27710

49 CFR

107....27231
171....26796
172....26796
173....26796
178....26796
219....24765
229....24765, 27900
382....24765
390....26001, 27700
552....26002
554....26002
571....24562, 24797, 27233
573....26002
576....26002
577....26002
654....24765
821....25620
1002....22303
1011....22303
1039....26839
1160....22303
1161....22303
1162....22303
1163....22303

Proposed Rules:

10....27946
195....27948
214....22542
383....24820
571....25880, 27711
575....27472
1121....22035

50 CFR

217....21741, 25620, 26691
222....25620
227....21741, 25620, 26691
301....26840
625....27906
649....21994
651....21994, 26841
652....25853
661....21746
663....22303, 24572
672....24800, 25623, 26694, 27425
675....22306, 24800, 25149, 26694, 26695, 26845, 27425
676....22307
678....21468, 27042

Proposed Rules:

10....24686
17....25882, 26712, 26713, 27954
20....27249
100....24601
216....22345
217....25663
222....25663
227....25663
285....25665
424....26863
625....21491
640....21493
649....25194
650....25194
651....25194
659....26403
671....22542, 25677
672....22542, 25677
673....24822
675....22542, 25677, 27488
676....22542, 25677