6–2–95
Vol. 60 No. 106
Pages 28701–29462

federal register

Friday
June 2, 1995

Briefings on How To Use the Federal Register
For information on briefings in Washington, DC and Boston, MA see announcement on the inside cover of this issue.

FEDERAL REGISTER Published daily, Monday through Friday, (not published on Saturdays, Sundays, or on official holidays), by the Office of the Federal Register, National Archives and Records Administration, Washington, DC 20408, under the Federal Register Act (49 Stat. 500, as amended; 44 U.S.C. Ch. 15) and the regulations of the Administrative Committee of the Federal Register (1 CFR Ch. I). Distribution is made only by the Superintendent of Documents, U.S. Government Printing Office, Washington, DC 20402.

The **Federal Register** provides a uniform system for making available to the public regulations and legal notices issued by Federal agencies. These include Presidential proclamations and Executive Orders and Federal agency documents having general applicability and legal effect, documents required to be published by act of Congress and other Federal agency documents of public interest. Documents are on file for public inspection in the Office of the Federal Register the day before they are published, unless earlier filing is requested by the issuing agency.

The seal of the National Archives and Records Administration authenticates this issue of the **Federal Register** as the official serial publication established under the Federal Register Act. 44 U.S.C. 1507 provides that the contents of the **Federal Register** shall be judicially noticed.

The **Federal Register** is published in paper, 24x microfiche and as an online database through *GPO Access*, a service of the U.S. Government Printing Office. The online database is updated by 6 a.m. each day the **Federal Register** is published. The database includes both text and graphics from Volume 59, Number 1 (January 2, 1994) forward. It is available on a Wide Area Information Server (WAIS) through the Internet and via asynchronous dial-in. The annual subscription fee for a single workstation is $375. Six-month subscriptions are available for $200 and one month of access can be purchased for $35. Discounts are available for multiple-workstation subscriptions. To subscribe, Internet users should telnet to swais.access.gpo.gov and login as newuser (all lower case); no password is required. Dial-in users should use communications software and modem to call (202) 512–1661 and login as swais (all lower case); no password is required; at the second login prompt, login as newuser (all lower case); no password is required. Follow the instructions on the screen to register for a subscription for the **Federal Register** Online via *GPO Access.* For assistance, contact the *GPO Access* User Support Team by sending Internet e-mail to help@eids05.eids.gpo.gov, or a fax to (202) 512–1262, or by calling (202) 512–1530 between 7 a.m. and 5 p.m. Eastern time, Monday through Friday, except Federal holidays.

The annual subscription price for the **Federal Register** paper edition is $494, or $544 for a combined **Federal Register**, Federal Register Index and List of CFR Sections Affected (LSA) subscription; the microfiche edition of the **Federal Register** including the Federal Register Index and LSA is $433. Six month subscriptions are available for one-half the annual rate. The charge for individual copies in paper form is $8.00 for each issue, or $8.00 for each group of pages as actually bound; or $1.50 for each issue in microfiche form. All prices include regular domestic postage and handling. International customers please add 25% for foreign handling. Remit check or money order, made payable to the Superintendent of Documents, or charge to your GPO Deposit Account, VISA or MasterCard. Mail to: New Orders, Superintendent of Documents, P.O. Box 371954, Pittsburgh, PA 15250–7954.

There are no restrictions on the republication of material appearing in the **Federal Register.**

How To Cite This Publication: Use the volume number and the page number. Example: 60 FR 12345.

SUBSCRIPTIONS AND COPIES

PUBLIC

Subscriptions:

Paper or fiche	**202–512–1800**
Assistance with public subscriptions	**512–1806**

Online:

Telnet swais.access.gpo.gov, login as newuser <enter>, no password <enter>; or use a modem to call (202) 512–1661, login as swais, no password <enter>, at the second login as newuser <enter>, no password <enter>.

Assistance with online subscriptions	**202–512–1530**

Single copies/back copies:

Paper or fiche	**512–1800**
Assistance with public single copies	**512–1803**

FEDERAL AGENCIES

Subscriptions:

Paper or fiche	**523–5243**
Assistance with Federal agency subscriptions	**523–5243**

For other telephone numbers, see the Reader Aids section at the end of this issue.

THE FEDERAL REGISTER

WHAT IT IS AND HOW TO USE IT

FOR: Any person who uses the Federal Register and Code of Federal Regulations.

WHO: The Office of the Federal Register.

WHAT: Free public briefings (approximately 3 hours) to present:

1. The regulatory process, with a focus on the Federal Register system and the public's role in the development of regulations.
2. The relationship between the Federal Register and Code of Federal Regulations.
3. The important elements of typical Federal Register documents.
4. An introduction to the finding aids of the FR/CFR system.

WHY: To provide the public with access to information necessary to research Federal agency regulations which directly affect them. There will be no discussion of specific agency regulations.

WASHINGTON, DC

WHEN: June 28 at 9:00 am

WHERE: Office of the Federal Register Conference Room, 800 North Capitol Street NW., Washington, DC (3 blocks north of Union Station Metro)

RESERVATIONS: 202–523–4538

BOSTON, MA

WHEN: June 20 at 9:00 am

WHERE: Room 419, Barnes Federal Building 495 Summer Street, Boston, MA

RESERVATIONS: Call the Federal Information Center 1–800–347–1997

Printed on recycled paper containing 100% post consumer waste

Contents

Federal Register

Vol. 60, No. 106

Friday, June 2, 1995

Agricultural Marketing Service
RULES
Milk marketing orders:
Georgia et al., 29436–29453
Potatoes (Irish) grown in—
Southeastern States, 28701–28702
PROPOSED RULES
Milk marketing orders:
Texas, 28745–28747
Sheep promotion, research, and consumer information, 28747–28761
Walnuts grown in California, 28744–28745

Agriculture Department
See Agricultural Marketing Service
See Animal and Plant Health Inspection Service
NOTICES
Agency information collection activities under OMB review, 28777

Animal and Plant Health Inspection Service
PROPOSED RULES
Animal welfare:
Marine Mammal Negotiated Rulemaking Advisory Committee—
Establishment; correction, 28834

Assassination Records Review Board
NOTICES
Meetings; Sunshine Act, 28832

Blind or Severely Disabled, Committee for Purchase From People Who Are
See Committee for Purchase From People Who Are Blind or Severely Disabled

Children and Families Administration
RULES
Child welfare services program; Indian Tribal Organizations direct payments, 28735–28737
NOTICES
Meetings:
Child and Family Welfare Commission, 28790

Coast Guard
RULES
International Convention for Safety of Life at Sea (SOLAS 74); amendments
Correction, 28834

Commerce Department
See Foreign-Trade Zones Board
See National Oceanic and Atmospheric Administration
See Patent and Trademark Office

Committee for Purchase From People Who Are Blind or Severely Disabled
NOTICES
Procurement list; additions and deletions, 28780–28782

Commodity Futures Trading Commission
NOTICES
Meetings; Sunshine Act, 28832

Corporation for National and Community Service
NOTICES
Final Notice of Selection of AmeriCorps* VISTA Sponsors and Project Guidelines, 28782

Drug Enforcement Administration
RULES
Schedules of controlled substances:
4-Bromo-2,5-dimethoxyphenethylamine, 28717–28719
NOTICES
Applications, hearings, determinations, etc.:
Borcherding, Harlan J., D.O., 28796–28798

Employment and Training Administration
NOTICES
Adjustment assistance:
Baras Jersey Inc. et al., 28798–28799
Chevron USA Production Co., 28799–28800
Johnson Controls Battery Group, Inc., 28800
Johnson Controls Inc., 28800
Lockheed Fort Worth Co., 28800–28801
Pennzoil Products Co., 28801

Employment Standards Administration
See Wage and Hour Division

Energy Department
See Federal Energy Regulatory Commission
RULES
Acquisition regulations:
Management and operating contracts—
Purchasing systems; requirements modification, 28737–28741

Environmental Protection Agency
RULES
Air quality implementation plans; approval and promulgation; various States:
Michigan, 28729–28731
North Carolina, 28720–28726
Washington, 28726–28729
PROPOSED RULES
Air quality implementation plans; approval and promulgation; various States:
Michigan, 28773
North Carolina, 28772–28773
NOTICES
Environmental statements; availability, etc.:
Agency statements—
Comment availability, 28785
Weekly receipts, 28785–28786

Federal Aviation Administration
RULES
Airworthiness directives:
Lockheed, 28715–28716
Piper, 28702–28715
Class E airspace; correction, 28716
PROPOSED RULES
Air carrier certification and operations:
Commuter operator requirements
Public meetings, 28765–28766

Airworthiness directives:
Airbus, 28761–28763
Boeing, 28763–28764
Class E airspace, 28764–28765
NOTICES
Organization, functions, and authority delegations:
Stockton, CA, 28827
Passenger facility charges; applications, etc.:
John F. Kennedy International Airport, NY, et al.; correction, 28834
Orlando International Airport, FL, 28827–28828
Stewart International Airport, NY, 28828–28829
Syracuse Hancock International Airport, NY, 28829–28830

Federal Communications Commission
PROPOSED RULES
Common carrier services:
Calling number identification service (Caller ID); calling party number privacy, 28775
Tariffs—
AT&T Corp.; price cap rules, 28774–28775
Radio services, special:
Maritime services—
Radio installation inspection on large cargo and small passenger ships, 28775–28776

Federal Deposit Insurance Corporation
NOTICES
Meetings; Sunshine Act, 28832

Federal Emergency Management Agency
RULES
Flood insurance; communities eligible for sale:
New York et al., 28732–28735
NOTICES
Disaster and emergency areas:
Louisiana, 28786
Mississippi, 28786–28787

Federal Energy Regulatory Commission
NOTICES
Electric rate and corporate regulation filings:
National Electric Associates L.P. et al., 28782–28783
PowerWorld; power flow simulation package presentation, 28783
Applications, hearings, determinations, etc.:
Colorado Interstate Gas Co., 28783
Great Lakes Gas Transmission Co., 28784
Koch Gateway Pipeline Co., 28784
S.D. Warren Co., 28784–28785
Texas Gas Transmission Corp., 28784
Williams Natural Gas Co., 28785

Federal Maritime Commission
NOTICES
Freight forwarder licenses:
Worldwide International Forwarders, Inc., et al., 28787

Federal Mine Safety and Health Review Commission
NOTICES
Meetings; Sunshine Act, 28832–28833

Federal Reserve System
NOTICES
Agency information collection activities under OMB review, 28787–28790
Meetings; Sunshine Act, 28833

Foreign-Trade Zones Board
NOTICES
Applications, hearings, determinations, etc.:
Florida; correction, 28834

Health and Human Services Department
See Children and Families Administration
See Health Care Financing Administration
See Public Health Service

Health Care Financing Administration
PROPOSED RULES
Medicare:
Hospital inpatient prospective payment systems and rates (1996 FY), 29202–29434

Housing and Urban Development Department
NOTICES
Grants and cooperative agreements; availability, etc.:
Facilities to assist homeless—
Excess and surplus Federal property, 28790–28792
Public and Indian housing—
Youth violence prevention activities, 29456–29461

Interior Department
See Land Management Bureau
See National Park Service
PROPOSED RULES
Natural resource damage assessments, 28773–28774

Internal Revenue Service
RULES
Procedure and administration:
Real property redemptions; payment of excess expenses by purchaser, 28719–28720

International Development Cooperation Agency
See Overseas Private Investment Corporation

International Trade Commission
NOTICES
Import investigations:
Canned pineapple fruit from—
Thailand, 28795

Justice Department
See Drug Enforcement Administration

Labor Department
See Employment and Training Administration
See Wage and Hour Division

Land Management Bureau
RULES
Public land orders:
New Mexico, 28731–28732
NOTICES
Coal leases, exploration licenses, etc.:
Wyoming, 28792–28793
Oil and gas leases:
Wyoming, 28793
Resource management plans, etc.:
Walker Resource Area, NV, 28793
Survey plat filings:
Utah, 28793–28794

Mine Safety and Health Federal Review Commission
See Federal Mine Safety and Health Review Commission

National Oceanic and Atmospheric Administration
RULES
Endangered and threatened species:
Sea turtle conservation; shrimp trawling requirements—Turtle excluder device exemption, 28741–28743
PROPOSED RULES
Tuna, Atlantic bluefin fisheries, 28776
NOTICES
Permits:
Endangered and threatened species, 28777
Marine mammals, 28777–28778

National Park Service
NOTICES
Concession contract negotiations:
Muir Woods National Monument, CA, 28794
Yosemite National Park, CA; medical clinic, 28794
Meetings:
Chesapeake and Ohio Canal National Historical Park Commission, 28794–28795
Realty actions; sales, leases, etc.:
Georgia, 28795

National Science Foundation
NOTICES
Meetings:
Advanced Scientific Computing Special Emphasis Panel, 28803
Biological Sciences Special Emphasis Panel, 28803
Civil and Mechanical Systems Special Emphasis Panel, 28803–28804
Design, Manufacture, and Industrial Innovation Special Emphasis Panel, 28804
Electrical and Communications Systems Special Emphasis Panel, 28804
Engineering Advisory Committee, 28804
Future of NSF Supercomputer Centers Program Task Force, 28804–28805
Social, Behavioral, and Economic Sciences Advisory Committee, 28805

Nuclear Regulatory Commission
NOTICES
Generic letters:
Relocation of pressure temperature limit curves and low temperature overpressure protection system limits, 28805–28808
Petitions; Director's decisions:
Commonwealth Edison Co., 28808–28812
Applications, hearings, determinations, etc.:
Detroit Edison Co., 28812–28813

Overseas Private Investment Corporation
NOTICES
Meetings; Sunshine Act, 28833

Patent and Trademark Office
NOTICES
Patents:
Computer-implemented inventions; application guidelines, 28778–28700

Public Health Service
NOTICES
Agency information collection activities under OMB review, 28790

Securities and Exchange Commission
RULES
Securities:
Trading systems operated by brokers and dealers; recordkeeping and reporting requirements, 28717
NOTICES
Agency information collection activities under OMB review, 28815
Self-regulatory organizations; proposed rule changes:
National Association of Securities Dealers, Inc., 28813–28815
New York Stock Exchange, Inc., 28817–28818
Philadelphia Stock Exchange, Inc., 28815–28817
Applications, hearings, determinations, etc.:
IDS Certificate Co., 28818–28820
Public utility holding company filings, 28820–28823
Security Equity Life Insurance Co. et al., 28823–28825

Social Security Administration
PROPOSED RULES
Social security and black lung benefits:
Overpayment appeal and waiver rights, 28767–28772
NOTICES
Agency information collection activities under OMB review, 28825–28826

Thrift Depositor Protection Oversight Board
NOTICES
Meetings; regional advisory boards:
Regions I through VI, 28826

Transportation Department
See Coast Guard
See Federal Aviation Administration
NOTICES
Aviation proceedings:
Agreements filed; weekly receipts, 28826
Certificates of public convenience and necessity and foreign air carrier permits; weekly applications, 28826–28827
Meetings:
Western Hemisphere Transportation Initiative; comment request, 28827

Treasury Department
See Internal Revenue Service

Veterans Affairs Department
NOTICES
Agency information collection activities under OMB review, 28830–28831
Persian Gulf War veterans national health survey, 28831

Wage and Hour Division
NOTICES
Minimum wages for Federal and federally-assisted construction; general wage determination decisions, 28801–28803

Separate Parts In This Issue

Part II
Department of Health and Human Services, Health Care Financing Administration, 29202–29434

Part III
Department of Agriculture, Agricultural Marketing Service, 29436–29453

Part IV
Department of Housing and Urban Development, 29456–29461

Reader Aids
Additional information, including a list of public laws, telephone numbers, and finding aids, appears in the Reader Aids section at the end of this issue.

Electronic Bulletin Board
Free **Electronic Bulletin Board** service for Public Law numbers, **Federal Register** finding aids, and a list of documents on public inspection is available on 202–275–1538 or 275–0920.

CFR PARTS AFFECTED IN THIS ISSUE

A cumulative list of the parts affected this month can be found in the Reader Aids section at the end of this issue.

7 CFR
953 28701
1007 29436
1093 29436
1094 29436
1096 29436
1108 29436
Proposed Rules:
984 28744
1126 28745
1280 28747

9 CFR
Proposed Rules:
3 28834

14 CFR
39 (2 documents) 28702, 28715
71 28716
Proposed Rules:
39 (2 documents) 28761, 28763
71 28764
135 28765

17 CFR
200 28717
240 28717

20 CFR
Proposed Rules:
404 28767
410 28767

21 CFR
1308 28718

26 CFR
301 28719

33 CFR
164 28834

40 CFR
52 (3 documents) 28720, 28726, 28729
Proposed Rules:
52 (2 documents) 28772, 28773

42 CFR
Proposed Rules:
412 29202
413 29202
424 29202
485 29202
489 29202

43 CFR
Public Land Orders:
7146 28731
Proposed Rules:
11 28773

44 CFR
64 28732

45 CFR
1357 28735

47 CFR
Proposed Rules:
61 28774
64 28775
80 28775

48 CFR
933 28737
970 28737

50 CFR
227 28741
Proposed Rules:
285 28776

Rules and Regulations

Federal Register
Vol. 60, No. 106
Friday, June 2, 1995

This section of the FEDERAL REGISTER contains regulatory documents having general applicability and legal effect, most of which are keyed to and codified in the Code of Federal Regulations, which is published under 50 titles pursuant to 44 U.S.C. 1510.

The Code of Federal Regulations is sold by the Superintendent of Documents. Prices of new books are listed in the first FEDERAL REGISTER issue of each week.

DEPARTMENT OF AGRICULTURE

Agricultural Marketing Service

7 CFR Part 953

[Docket No. FV95–953–1IFR]

Southeastern Potatoes; Expenses and Assessment Rate

AGENCY: Agricultural Marketing Service, USDA.

ACTION: Interim final rule with request for comments.

SUMMARY: This interim final rule authorizes expenditures and establishes an assessment rate under Marketing Order No. 953 for the 1995–96 fiscal period. Authorization of this budget enables the Southeastern Potato Committee (Committee) to incur expenses that are reasonable and necessary to administer the program. Funds to administer this program are derived from assessments on handlers.

DATES: Effective June 1, 1995, through May 31, 1996. Comments received by July 3, 1995, will be considered prior to issuance of a final rule.

ADDRESSES: Interested persons are invited to submit written comments concerning this action. Comments must be sent in triplicate to the Docket Clerk, Fruit and Vegetable Division, AMS, USDA, P.O. Box 96456, room 2523–S, Washington, DC 20090–6456, FAX 202–720–5698. Comments should reference the docket number and the date and page number of this issue of the **Federal Register** and will be available for public inspection in the Office of the Docket Clerk during regular business hours.

FOR FURTHER INFORMATION CONTACT: Martha Sue Clark, Marketing Order Administration Branch, Fruit and Vegetable Division, AMS, USDA, P.O. Box 96456, room 2523–S, Washington, DC 20090–6456, telephone 202–720–9918.

SUPPLEMENTARY INFORMATION: This rule is issued under Marketing Agreement No. 104 and Order No. 953, both as amended (7 CFR part 953), regulating the handling of Irish potatoes grown in two southeastern States (Virginia and North Carolina). The marketing agreement and order are effective under the Agricultural Marketing Agreement Act of 1937, as amended (7 U.S.C. 601–674), hereinafter referred to as the Act.

The Department of Agriculture (Department) is issuing this rule in conformance with Executive Order 12866.

This interim final rule has been reviewed under Executive Order 12778, Civil Justice Reform. Under the marketing order now in effect, Virginia-North Carolina potato handlers are subject to assessments. It is intended that the assessment rate as issued herein will be applicable to all assessable potatoes during the 1995–96 fiscal period, which begins June 1, 1995, and ends May 31, 1996. This interim final rule will not preempt any State or local laws, regulations, or policies, unless they present an irreconcilable conflict with this rule.

The Act provides that administrative proceedings must be exhausted before parties may file suit in court. Under section 8c(15)(A) of the Act, any handler subject to an order may file with the Secretary a petition stating that the order, any provision of the order, or any obligation imposed in connection with the order is not in accordance with law and request a modification of the order or to be exempted therefrom. Such handler is afforded the opportunity for a hearing on the petition. After the hearing the Secretary would rule on the petition. The Act provides that the district court of the United States in any district in which the handler is an inhabitant, or has his or her principal place of business, has jurisdiction in equity to review the Secretary's ruling on the petition, provided a bill in equity is filed not later than 20 days after the date of the entry of the ruling.

Pursuant to the requirements set forth in the Regulatory Flexibility Act (RFA), the Administrator of the Agricultural Marketing Service (AMS) has considered the economic impact of this rule on small entities.

The purpose of the RFA is to fit regulatory actions to the scale of business subject to such actions in order that small businesses will not be unduly or disproportionately burdened. Marketing orders issued pursuant to the Act, and the rules issued thereunder, are unique in that they are brought about through group action of essentially small entities acting on their own behalf. Thus, both statutes have small entity orientation and compatibility.

There are approximately 150 producers of Southeastern potatoes under this marketing order, and approximately 60 handlers. Small agricultural producers have been defined by the Small Business Administration (13 CFR 121.601) as those having annual receipts of less than $500,000, and small agricultural service firms are defined as those whose annual receipts are less than $5,000,000. The majority of Southeastern potato producers and handlers may be classified as small entities.

The budget of expenses for the 1995–96 fiscal period was prepared by the Southeastern Potato Committee, the agency responsible for local administration of the marketing order, and submitted to the Department for approval. The members of the Committee are producers and handlers of Southeastern potatoes. They are familiar with the Committee's needs and with the costs of goods and services in their local area and are thus in a position to formulate an appropriate budget. The budget was formulated and discussed in a public meeting. Thus, all directly affected persons have had an opportunity to participate and provide input.

The assessment rate recommended by the Committee was derived by dividing anticipated expenses by expected shipments of Southeastern potatoes, based on last season's crop of approximately 1,124,736 hundredweight. Because that rate will be applied to actual shipments, it must be established at a rate that will provide sufficient income to pay the Committee's expenses.

The Committee met April 20, 1995, and unanimously recommended a 1995–96 budget of $12,000, $1,000 more than the previous year. The budget item for 1995–96 which has increased compared to that budgeted for 1994–95 (in parentheses) is: Manager's salary, $5,800 ($4,800). All other items are budgeted at last year's amounts.

The Committee also recommended an assessment rate of $0.0050 per hundredweight, $0.0025 less than last season's rate. Planting for the 1995 crop has not been completed. However, it is estimated that shipments will generate about $5,624 in assessment income. This, along with $6,376 from the Committee's reserve, will be adequate to cover the expenses incurred. Funds remaining at the end of the 1995–96 fiscal period should be within the maximum permitted by the order of approximately one fiscal period's expenses.

While this action will impose some additional costs on handlers, the costs are in the form of uniform assessments on handlers. Some of the additional costs may be passed on to producers. However, these costs will be offset by the benefits derived by the operation of the marketing order. Therefore, the Administrator of the AMS has determined that this action will not have a significant economic impact on a substantial number of small entities.

After consideration of all relevant matter presented, including the information and recommendations submitted by the Committee and other available information, it is hereby found that this rule, as hereinafter set forth, will tend to effectuate the declared policy of the Act.

Pursuant to 5 U.S.C. 553, it is also found and determined upon good cause that it is impracticable, unnecessary, and contrary to the public interest to give preliminary notice prior to putting this rule into effect and that good cause exists for not postponing the effective date of this action until 30 days after publication in the **Federal Register** because: (1) The Committee needs to have sufficient funds to pay its expenses which are incurred on a continuous basis; (2) the fiscal period begins on June 1, 1995, and the marketing order requires that the rate of assessment for the fiscal period apply to all assessable Irish potatoes handled during the fiscal period; (3) handlers are aware of this action which was unanimously recommended by the Committee at a public meeting and is similar to other budget actions issued in past years; and (4) this interim final rule provides a 30-day comment period, and all comments timely received will be considered prior to finalization of this action.

List of Subjects in 7 CFR Part 953

Marketing agreements, Potatoes, Reporting and recordkeeping requirements.

For the reasons set forth in the preamble, 7 CFR part 953 is amended as follows:

PART 953—IRISH POTATOES GROWN IN SOUTHEASTERN STATES

1. The authority citation for 7 CFR part 953 continues to read as follows:

Authority: 7 U.S.C. 601–674.

2. A new § 953.252 is added to read as follows:

Note: This section will not appear in the Code of Federal Regulations.

§ 953.252 Expenses and assessment rate.

Expenses of $12,000 by the Southeastern Potato Committee are authorized, and an assessment rate of $0.0050 per hundredweight of assessable potatoes is established for the fiscal period ending May 31, 1996. Unexpended funds may be carried over as a reserve.

Dated: May 26, 1995.

Sharon Bomer Lauritsen,

Deputy Director, Fruit and Vegetable Division.

[FR Doc. 95–13511 Filed 6–1–95; 8:45 am]

BILLING CODE 3410–02–P

DEPARTMENT OF TRANSPORTATION

Federal Aviation Administration

14 CFR Part 39

[Docket No. 92–CE–63–AD; Amendment 39–9251; AD 95–12–01]

Airworthiness Directives; Piper Aircraft Corporation PA–25 Series Airplanes

AGENCY: Federal Aviation Administration, DOT.

ACTION: Final rule.

SUMMARY: This amendment supersedes Airworthiness Directive (AD) 93–21–12, which currently requires inspecting (one-time visual and dye penetrant) the wing forward spar fuselage attachment assembly for cracks or corrosion on certain Piper Aircraft Corporation (Piper) PA–25 series airplanes, and replacing or repairing any cracked or corroded part. This action requires repetitively inspecting (using ultrasonic and dye penetrant procedures) the wing forward spar fuselage attachment assembly for cracks or corrosion, replacing or repairing any cracked or corroded part, and reporting to the Federal Aviation Administration (FAA) the results of the inspections. This action is prompted by the FAA's lack of confidence in detecting internal corrosion in the wing forward spar fuselage attachment fittings while accomplishing the inspection methods required by AD 93–21–12. A report of a crack in the wing forward spar fuselage attachment assembly on an airplane where the inspection requirements of AD 93–21–12 were accomplished also prompted this action. The actions specified by this AD are intended to prevent possible in-flight separation of the wing from the airplane caused by a cracked or corroded wing forward spar fuselage attachment assembly.

EFFECTIVE DATE: July 7, 1995.

ADDRESSES: Information that applies to this AD may be examined at the FAA, Central Region, Office of the Assistant Chief Counsel, Room 1558, 601 E. 12th Street, Kansas City, Missouri 64106.

FOR FURTHER INFORMATION CONTACT: Christina Marsh, Aerospace Engineer, FAA, Atlanta Aircraft Certification Office, Campus Building, 1701 Columbia Avenue, suite 2–160, College Park, Georgia 30337–2748; telephone (404) 305–7362; facsimile (404) 305–7348.

SUPPLEMENTARY INFORMATION: A proposal to amend part 39 of the Federal Aviation Regulations (14 CFR part 39) to include an AD that would apply to Piper PA–25 series airplanes was published in the **Federal Register** on January 20, 1995 (60 FR 4119). The action proposed to supersede AD 93–21–12 to require repetitively inspecting (using ultrasonic and dye penetrant procedures) the wing forward spar fuselage attachment assembly for cracks or corrosion, and replacing or repairing any cracked or corroded part. Accomplishment of the proposed actions would be in accordance with the APPENDIX included at the end of the AD.

Interested persons have been afforded an opportunity to participate in the making of this amendment. Due consideration has been given to the comments received.

A number of commenters recommend a longer inspection interval for the affected airplanes, specifically:

- Four commenters recommend that the FAA establish a more frequent inspection interval for those airplanes operating in agricultural conditions. Two of the commenters recommend utilizing the proposed two-year inspection interval for those in agricultural operation and a longer interval for those in non-agricultural operation;
- One commenter recommends that the repetitive inspection only apply to those airplanes in agricultural operation;
- One commenter recommends a repetitive inspection interval of 2,000 hours time-in-service (TIS);
- Six commenters recommend a 10-year repetitive inspection interval;
- One commenter recommends a 5-year repetitive inspection interval;
- One commenter recommends a 3- to 5-year repetitive inspection interval for those airplanes in non-agricultural operation;

- One commenter recommends a 5-year repetitive inspection interval for those in NORMAL category operation; and
- One commenter recommends a repetitive inspection interval of 5 years or 2,000 hours TIS, whichever occurs first.

The FAA analyzed and evaluated all available information relating to the Piper PA–25 series airplane wing forward spar fuselage attachment assembly crack and corrosion condition when establishing the repetitive inspection intervals. Based on this information, no correlation exists between the type of operation that these airplanes are utilized and the time it takes for corrosion to develop. The AD compliance time, including the repetitive inspection interval, is unchanged as a result of these comments. However, the FAA is adding a reporting requirement to the final rule as a method of further analyzing this condition on the PA–25 series airplane fleet. Based on this data, the FAA may adjust the repetitive inspection interval in the future.

Three commenters feel that AD action is unjustified because the Piper PA–25 series airplane design is no different than that of any other airplane constructed with a steel fuselage frame. While there are literally thousands of airplanes constructed with steel fuselage frames, each airplane series or model is unique to its own type design. AD's are issued to correct an unsafe condition that exists or could develop on a specific type design aircraft. The FAA continuously analyzes the data of each specific type design aircraft to determine whether an unsafe condition exists or could develop for a particular airplane. Regardless of how many AD's exist on other airplane type designs utilizing steel fuselage structures, the FAA has received sufficient data to justify issuing an AD to require repetitive ultrasonic and dye penetrant inspections of the wing forward spar fuselage attachment assembly of the Piper PA–25 series airplane type design. The AD is unchanged as a result of these comments.

Seven commenters feel that there is an increased potential for causing damage to the airplane during the disassembly and re-assembly necessary to accomplish the repetitive inspections. The commenters' main concern is the repeated removal of the close-tolerance attach bolts every two years. The FAA concurs with the idea that frequent disassembly and re-assembly of the airplane provides the potential for damaging the airplane, as is true for removing any component to facilitate inspection. However, the FAA considers the removal of PA–25 series airplane close-tolerance bolts within the skill requirements of a mechanic certified in accordance with part 65 of the Federal Aviation Regulations (14 CFR part 65), and that a mechanic certified in this manner can assemble and disassemble the airplane in a non-damaging manner. The AD is unchanged as a result of these comments.

Two commenters state that the probability of wing failure caused by human error during frequent wing removal is greater than wing failure caused by a cracked or corroded wing attach fitting. The FAA does not concur. The FAA has not received any reports, data, or information related to Piper PA–25 series airplane wing failure caused by disassembling and reassembling the wing; however, the FAA has received information and data related to two accidents of Piper PA–25 series airplanes where the wing failed because of cracked and corroded wing forward spar fuselage attachment assemblies. The AD is unchanged as a result of these comments.

Three commenters believe that accomplishing the visual and dye-penetrant inspections specified in AD 93–21–12 are sufficient to detect corrosion and cracks in the wing forward spar fuselage attachment assembly. One commenter states that this assembly may be adequately inspected without removing the wings. The FAA does not concur. Analysis of the wing fittings in the two accidents revealed that corrosion internal to the fitting assembly was a contributing factor to the failures. The FAA developed the proposed ultrasonic and dye penetrant inspection procedures while actually examining a Piper PA–25 series airplane. The development of these procedures confirmed to the FAA that it is possible to inspect a Piper PA–25 series airplane as required by AD 93–21–12 and not detect corrosion, and that using ultrasonic inspection procedures is the only FAA-known way of detecting internal corrosion in the wing forward spar fuselage attachment assembly on the affected airplanes. The AD is unchanged as a result of these comments.

Three commenters state that the one-time inspection required by AD 93–21–12 is sufficient. The commenters feel that this AD raised the PA–25 series airplane operators' awareness of and emphasized to the applicable mechanics the importance of performing inspections of the wing forward spar fuselage attachment assembly on a regular basis in the future. The FAA does not concur. A one-time inspection mandated by an AD may make airplane operators aware of the importance of future repetitive inspections; however, AD action mandating ultrasonic and dye penetrant repetitive inspections is the only method the FAA is aware of to ensure that the unsafe condition of internal corrosion in the wing forward spar fuselage attachment assembly on the affected airplanes is detected and corrected.

One commenter states that the provision for replacing the wing attach cluster every five years instead of repetitively inspecting every two years is too short of a repetitive interval. The commenter feels that, if the existing fittings have been installed for 20 to 30 years, then justification exists for allowing additional time between repetitive inspections if the cluster is replaced. The FAA partially concurs. The FAA included this cluster replacement provision to give owners/operators a grace period if the cluster was recently replaced. The reason for a five-year threshold is to ensure that repetitive inspections are initiated on the assembly before corrosion develops or a crack initiates. The addition of the inspection reporting requirement will allow the FAA to continuously evaluate this threshold, and, as appropriate, either extend or shorten the repetitive inspection interval in the future.

Five commenters believe that repetitive inspections are unjustified. These commenters state that, because the FAA issued AD 93–21–12 to require a one-time inspection 20 to 30 years after the PA–25 series airplanes were manufactured, it is unrealistic to believe that corrosion or cracks could occur in the cluster assembly in the two years since the initial inspection required by AD 93–21–12. The FAA does not concur. As stated earlier, the airplanes in the referenced accidents had corrosion internal to the wing fitting assembly. The FAA has determined that the inspections currently required by AD 93–21–12 will not adequately detect internal corrosion and, this internal corrosion could develop to the point of structural failure to the wing when not inspected ultrasonically on a regular basis. The AD is unchanged as a result of these comments.

Eleven commenters state that the ultrasonic inspections contained in the proposal would provide a financial impact upon the operators of the Piper PA–25 series airplanes. Two of these commenters feel that the impact could be severe enough to eliminate the Piper PA–25 series airplane fleet. The FAA concurs that the actions would present a financial impact upon the Piper PA–25 series airplane operators. Although the main criteria for issuing an AD is to correct a known unsafe condition and

maintain a level of safety for the airplane equivalent to that originally certificated, the FAA must present an estimated cost impact upon the public for each AD. The FAA analyzes each AD to ensure that the condition specified in the AD is unsafe and is needed to maintain the original level of safety and that the estimated cost is a fair representation of reality. The FAA has determined that the level of safety needed for the Piper PA–25 series airplanes would no longer be achieved if this AD action was not mandated, and that the cost presented in the economic paragraph of this AD is an accurate assessment of the actual cost impact upon the public. The AD is unchanged as a result of these comments.

One commenter states that the ultrasonic inspection specified in the proposal is not necessary for the steel fuselage tubing. The FAA concurs. The requirements of the AD are only to inspect ultrasonically the wing attach fitting clevis ears for internal corrosion. The AD is unchanged as a result of this comment.

Two commenters recommend that the FAA include certain corrosion preventative treatments as an option for extending the time that the repetitive inspections are required. One of these commenters specifically recommends packing zinc chromate paste on the wing attach fitting area or treating the fuselage tubing with linseed oil. The other commenter recommends treating the clusters with Neutrasol after the initial inspection to halt any additional corrosion development. At this time, the FAA does not have enough data to ensure that corrosion inhibitors will deter or eliminate the development of internal corrosion of the wing forward spar fuselage attachment assembly. The FAA will keep these ideas in mind while analyzing the data of the inspection results obtained through this AD. As in any AD action, the airplane owners/operators may submit any data or ideas to the FAA as a request for an alternative method of compliance as specified in paragraph (k) of the AD. The AD is unchanged as a result of these comments.

After careful review of all available information related to the subject presented above, the FAA has determined that air safety and the public interest require the adoption of the rule as proposed except for the addition of the reporting requirement and minor editorial corrections. The FAA has determined that the reporting requirement addition and the minor editorial corrections will not change the meaning of the AD over that which was proposed. The addition of the reporting requirement only adds a paperwork burden upon the public over that already proposed, and the data obtained from the reports may lead the FAA to extend the repetitive inspection interval in the future.

The compliance time for this AD is presented in calendar time instead of hours TIS. The FAA has determined that a calendar time for compliance is the most desirable method because the unsafe condition described by this AD is caused by corrosion. Corrosion can occur on airplanes regardless of whether the airplane is in service or in storage. Therefore, to ensure that corrosion is detected and corrected on all airplanes within a reasonable period of time without inadvertently grounding any airplanes, the FAA is mandating a compliance schedule based upon calendar time instead of hours TIS.

The FAA estimates that 1,272 airplanes in the U.S. registry will be affected by this AD, that it will take approximately 30 workhours per airplane to accomplish the required inspection, and that the average labor rate is approximately $60 an hour. The FAA has become aware that the affected airplane owners/operators could incur additional expenses to have their airplanes ultrasonically inspected. This figure will vary based on scheduling and travel time; however, for the purposes of this AD the FAA is using a figure of $500. Based on these figures, the total cost impact of this AD on U.S. operators is estimated to be $2,925,600. This figure is based on the assumption that no affected airplane owner/operator has accomplished the required inspections, and does not reflect the cost of repetitive inspections. The FAA has no way of determining how many repetitive inspections a particular owner/operator may incur. In addition, the figure reflects a $500 expense charge for the ultrasonic inspection. The FAA anticipates that many of the affected airplane owners/operators will have ultrasonic expense charges much less than $500.

The regulations adopted herein will not have substantial direct effects on the States, on the relationship between the national government and the States, or on the distribution of power and responsibilities among the various levels of government. Therefore, in accordance with Executive Order 12612, it is determined that this final rule does not have sufficient federalism implications to warrant the preparation of a Federalism Assessment.

For the reasons discussed above, I certify that this action (1) is not a ''significant regulatory action'' under Executive Order 12866; (2) is not a ''significant rule'' under DOT Regulatory Policies and Procedures (44 FR 11034, February 26, 1979); and (3) will not have a significant economic impact, positive or negative, on a substantial number of small entities under the criteria of the Regulatory Flexibility Act. A copy of the final evaluation prepared for this action is contained in the Rules Docket. A copy of it may be obtained by contacting the Rules Docket at the location provided under the caption **ADDRESSES.**

List of Subjects in 14 CFR Part 39

Air transportation, Aircraft, Aviation safety, Incorporation by reference, Safety.

Adoption of the Amendment

Accordingly, pursuant to the authority delegated to me by the Administrator, the Federal Aviation Administration amends part 39 of the Federal Aviation Regulations (14 CFR part 39) as follows:

PART 39—AIRWORTHINESS DIRECTIVES

1. The authority citation for part 39 continues to read as follows:

Authority: 49 U.S.C. App. 1354(a), 1421 and 1423; 49 U.S.C. 106(g); and 14 CFR 11.89.

§ 39.13 [Amended]

2. Section 39.13 is amended by removing AD 93–21–12, Amendment 39–8763 (58 FR 65104, December 13, 1993), and by adding a new AD to read as follows:

95–12–01 Piper Aircraft Corporation: Amendment 39–9251; Docket No. 92–CE–63–AD. Supersedes AD 93–21–12, Amendment 39–8763.

Applicability: Models PA–25, PA–25–235, and PA–25–260 airplanes (all serial numbers), certificated in any category.

Note 1: This AD applies to each airplane identified in the preceding applicability provision, regardless of whether it has been modified, altered, or repaired in the area subject to the requirements of this AD. For airplanes that have been modified, altered, or repaired so that the performance of the requirements of this AD is affected, the owner/operator must use the authority provided in paragraph (k) of this AD to request approval from the FAA. This approval may address either no action, if the current configuration eliminates the unsafe condition, or different actions necessary to address the unsafe condition described in this AD. Such a request should include an assessment of the effect of the changed configuration on the unsafe condition addressed by this AD. In no case does the presence of any modification, alteration, or repair remove any airplane from the applicability of this AD.

Compliance: Required within the next 12 calendar months after the effective date of this AD, unless already accomplished, and thereafter at intervals not to exceed 24 calendar months (except as noted in paragraph (h) of this AD).

To prevent possible in-flight separation of the wing from the airplane caused by a cracked or corroded wing forward spar fuselage attachment assembly, accomplish the following:

(a) Gain access to the left and right wing forward spar fuselage attach fittings by removing the screws retaining the wing fairing. Dismantle the wing fillet by removing the screws on the aft edge top and bottom and removing the wing fairing (see FIGURE 1 of the Appendix to this AD).

(b) Remove the wing attach bolts and wing. Remove paint from the wing forward spar fuselage attachment fittings and surrounding areas; do not sand blast because it may obscure surface indications.

Note 2: Saturation of the bolts with a penetrating oil may facilitate removal.

(c) Visually inspect the wing forward spar tubular fuselage attach cluster for damage (cracks, corrosion, rust, or gouges). Prior to further flight, repair or replace any damaged tubular member with equivalent material in accordance with FAA Advisory Circular (AC) No. 43.13–1A, Acceptable Methods, Techniques, Practices—Aircraft Inspection and Repair.

(d) Inspect (using both dye penetrant and ultrasonic procedures) the wing forward spar fuselage attach fitting assembly, part numbers (P/N) 61005–0 (front spar fitting assembly) and 61006–0 (front spar fitting) for Model PA–25; and P/N 64412–0 (front spar fitting assembly) and 64003–0 (front spar fitting) for Models PA–25–235 and PA–25–260, for corrosion and cracks in accordance with the Appendix to this AD.

(1) If any corrosion is found that meets or exceeds the parameters presented in the Appendix to this AD or any cracks are found, prior to further flight, replace the forward spar fuselage tubular attach cluster with serviceable parts as specified in the Appendix to this AD.

(2) The inspection procedures in the Appendix of this AD, except for the dye penetrant inspection procedures, must be accomplished by a Level 2 inspector certified using the guidelines established by the American Society for Non-destructive Testing, or MIL–STD–410. A mechanic with at least an Airframe license may perform the dye penetrant inspection.

(e) Replacement parts required by this AD shall be of those referenced and specified in either Figures 3a and 3b, 4a and 4b, or 5a and 5b (as applicable), included as part of the Appendix of this AD.

(f) Prime and paint all areas where parts were replaced or where paint is bubbled or gone. Use epoxy paint and primer, and, after paint has cured, rust inhibit the entire area.

(g) Reinstall all items that were removed.

(h) If a new cluster is installed into the fuselage frame, repetitive inspections are not required until five years after the replacement date on the respective fuselage side. This cluster may be replaced every five years as an alternative to the repetitive inspections.

(i) Send the results of the inspection required by paragraph (d) of this AD within 10 calendar days after the inspection to the Manager, Atlanta Aircraft Certification Office (ACO), Campus Building, 1701 Columbia Avenue, suite 2–160, College Park, Georgia 30337–2748. Include the airplane model and serial number, the category of operation the airplane is operated in (normal or restricted), the location and condition of any cracked or corroded area, the number of hours TIS of the airplane at the time of inspection, and the approximate number of hours TIS accrued on the airplane annually. (Reporting approved by the Office of Management and Budget under OMB no. 2120–0056.)

(j) Special flight permits may be issued in accordance with sections 21.197 and 21.199 of the Federal Aviation Regulations (14 CFR 21.197 and 21.199) to operate the airplane to a location where the requirements of this AD can be accomplished.

(k) An alternative method of compliance or adjustment of the initial or repetitive compliance times that provides an equivalent level of safety may be approved by the Manager, Atlanta Aircraft Certification Office (ACO), Campus Building, 1701 Columbia Avenue, suite 2–160, College Park, Georgia 30337–2748. The request shall be forwarded through an appropriate FAA Maintenance Inspector, who may add comments and then send it to the Manager, Atlanta ACO.

Note 3: Information concerning the existence of approved alternative methods of compliance with this AD, if any, may be obtained from the Atlanta ACO.

(l) The Appendix to this AD may be obtained from the Atlanta ACO at the address specified in paragraph (k) of this AD. This document or any other information that relates to this AD may be inspected at the FAA, Central Region, Office of the Assistant Chief Counsel, Room 1558, 601 E. 12th Street, Kansas City, Missouri.

(m) This amendment (39–9251) supersedes AD 88–11– 05, Amendment 39–5997.

(n) This amendment (39–9251) becomes effective on July 7, 1995.

Appendix to AD 95–12–01—Procedures and Requirements for Wing Forward Spar Attachment Assembly; Inspection of Piper PA–25 Series Airplanes

Equipment Requirements

1. A portable combination ultrasonic flaw detector with both an LED thickness readout and an A-trace with thickness gate display.

2. An ultrasonic probe with the following: a 15 MHz 0.25-inch diameter with a 0.375-inch plastic delay line. An equivalent permanent delay line transducer that provides adequate sensitivity and resolution to measure a 0.050-inch steel shim can also be used.

3. Three steel shims within the range of 0.050 to 0.100 inches are required. To ensure proper calibration, the steel shims should be smooth and free of dirt. In order to verify the shim thickness, use a calibrated micrometer to measure the steel shims.

4. Either glycerin, 3-in-1 oil, or equivalent ultrasonic couplants are used to conduct this test set-up and inspection. Water-based couplants are not permitted because of the possibility of initiating long-term corrosion of the wing forward spar fuselage attachment fittings.

Note: Couplant is defined as ''a substance used between the face of the transducer and test surface to improve transmission of ultrasonic energy across this boundary or interface.''

Note: If surface pitting is found on either side of the fitting ears, lightly sand the surface to obtain a smooth working surface. Removal of surface irregularities such as pits, rust, scale, and paint will enhance the accuracy of the inspection technique.

Instrument Calibration

1. Turn the instrument power on and check the battery charge status. The instrument should have at least 40-percent of available battery life. The screen brightness and contrast of the display screen should match the environmental conditions (i.e., outside sunlight or inside a hangar).

2. Depending on the ultrasonic instrument used, select or verify the single element transducer setting from the probe selection menu. If a removable delay line is used, unscrew the plastic delay line from the transducer. Add couplant to the base of the delay line, than reattach the delay line.

3. Obtain steel shims with known or measured thickness at or near 0.050, 0.0075, and 0.100 inches. At least one steel shim shall be greater than 0.095 inches, one less than or equal to 0.050 inches, and one between these two values. Place the probe on the thickest steel shim using couplant. Adjust the gain setting to increase the backwall signal from this steel shim. An A-trace will appear on the screen and a thickness readout will appear on the display. The signal on the screen from left to right shows: the initial pulse, the delay line (the front surface of the steel shim) and the backwall echo of the steel shim. A second and third multiple backwall echo may also be seen on the A-trace. Enable the thickness gate. Adjust the thickness gate to initiate at the delay line to steel shim interface and terminate at the first backwall echo.

4. Place the probe on the thinnest steel shim using couplant. Adjust the damping, voltage and pulse width to obtain the maximum signal response and highest resolution on this steel shim. These settings can vary from probe to probe and are somewhat dependent on operator preferences.

5. To stabilize the interface synchronization, adjust the electronic triggering (blocking gate) to approximately three quarters of the distance between the initial pulse and the delay line interface echo. The thickness gate should initiate at the delay line interface echo and terminate at the first backwall echo.

6. Depending on the instrument and probe, select positive half-wave rectified signal display or negative half-wave rectified signal display. This selection should give the best signal display on the thinnest steel shim. Select the interface synchronization. This selection automatically starts the thickness gate at the delay time corresponding to the tip of the plastic delay line.

7. Couple the probe to the thickest steel shim using couplant. Adjust the range so the

A-scan display reads from 0.000 to 0.300 inches. Several multiple backwall echoes will disappear from the screen.

8. Adjust the thickness gate to trigger on the first return signal. Of instability of the gate trigger occurs, adjust the gain and/or damping the stabilize the thickness reading. A thickness readout should be present on the screen and near the known steel shim thickness.

9. Adjust the velocity to 0.231 inches/microseconds. The thickness reading should be the known steel shim thickness. Couple the transducer to the thinnest steel shim. If the thickness readout does not agree with the known thickness, adjust the fine delay setting to produce the known thickness. Re-check the thickest step. If the readout does not indicate the correct thickness re-adjust the fine delay setting. After this adjustment is made, record the thickness values for each of the steel shims on a set-up sheet.

10. Calculate the percent error for each measured steel shim. The maximum allowable percent error should not exceed 3-percent.

Inspection Procedures

1. Add couplant to the outside inspection surface (Refer to Figures 3a, 4a and 5a, as applicable). Add the appropriate gain to obtain the backwall echo from the inspection surface. If the gain setting is adjusted, re-check the thickness values on the steel shims. To assure proper coupling to the test sample, twist the probe clockwise and counter-clockwise (with a 45-degree twist) and maintain contact with the test surface. During the articulation of the probe, observe the A-trace on the screen and stop the probe twist at the point of adequate back surface signal amplitude to trigger the thickness gate on the first half-cycle. Measure and record the thickness. Repeat the above process at eight equally-spaced locations around the surface. The weld bead near the spar cluster maybe hard to access. Find a suitable location near the weld and measure the thickness.

2. Add couplant to the inside inspection surface (Refer to figures 3a, 4a and 5a, as applicable). Add the appropriate gain to obtain the backwall echo from the inspection surface. To assure proper coupling to the test sample, twist the probe (clockwise and counter-clockwise with a 45-degree twist). During the articulation of the probe, observe the A-trace ion the screen and stop the probe twist at the point of adequate back surface signal amplitude to trigger the thickness gate on the first half-cycle. Measure and record the thickness. Repeat the above process at eight equally-spaced locations around the surface.

3. If a thickness reading in any one of the eight locations from paragraph 1 of the Inspection Procedures section (outside section surface) is .085-inch or less for the PA–25 Model or .055-inch or less for the PA–25–235 and PA–25–260 Models, or if a thickness reading in any one of the eight locations from paragraph 2. of the Inspection Procedures section (inside section surface) is .055-inch or less for the PA–25 Model or .085-inch or less for the PA–25–235 and PA–25–260 Models, prior to further flight, replace the forward spar fuselage tubular attach cluster with serviceable parts in accordance with FAA AC No. 43.13–1A, Acceptable Methods, Techniques, Practices—Aircraft Inspection and Repair. This procedure requires the following:

a. Provide for the alignment of the airframe with an appropriate alignment fixture in accordance with FAA AC No. 43.13–1A, Acceptable Methods, Techniques, Practices—Aircraft Inspection and Repair.

b. Cut the tubular members as referenced and specified in Figure 2 and either Figures 3a and 3b; Figures 4a and 4b; or Figures 5a and 5b, as applicable.

c. Fabricate a cluster using all applicable part numbers referenced in Figures 3b, 4b, or 5b, as applicable; and

d. Splice the new cluster into the fuselage frame.

Dye Penetrant Inspection

Inspect the wing forward spar fuselage attach fitting assembly for cracks using FAA-approved dye penetrant methods. If any cracks are found, prior to further flight, replace the forward spar fuselage tubular attach cluster with serviceable parts in accordance with FAA AC No. 43.13–1A, Acceptable Methods, Techniques, Practices—Aircraft Inspection and Repair. This procedure requires the following:

1. Provide for the alignment of the airframe with an appropriate alignment fixture in accordance with FAA AC No. 43.13–1A, Acceptable Methods, Techniques, Practices—Aircraft Inspection and Repair.

2. Cut the tubular members as referenced and specified in Figure 2 and either Figures 3a and 3b; Figures 4a and 4b; or Figures 5a and 5b, as applicable.

3. Fabricate a cluster using all applicable part numbers referenced in Figures 3b, 4b, or 5b, as applicable; and

4. Splice the new cluster into the fuselage frame.

BILLING CODE 4910–13–U

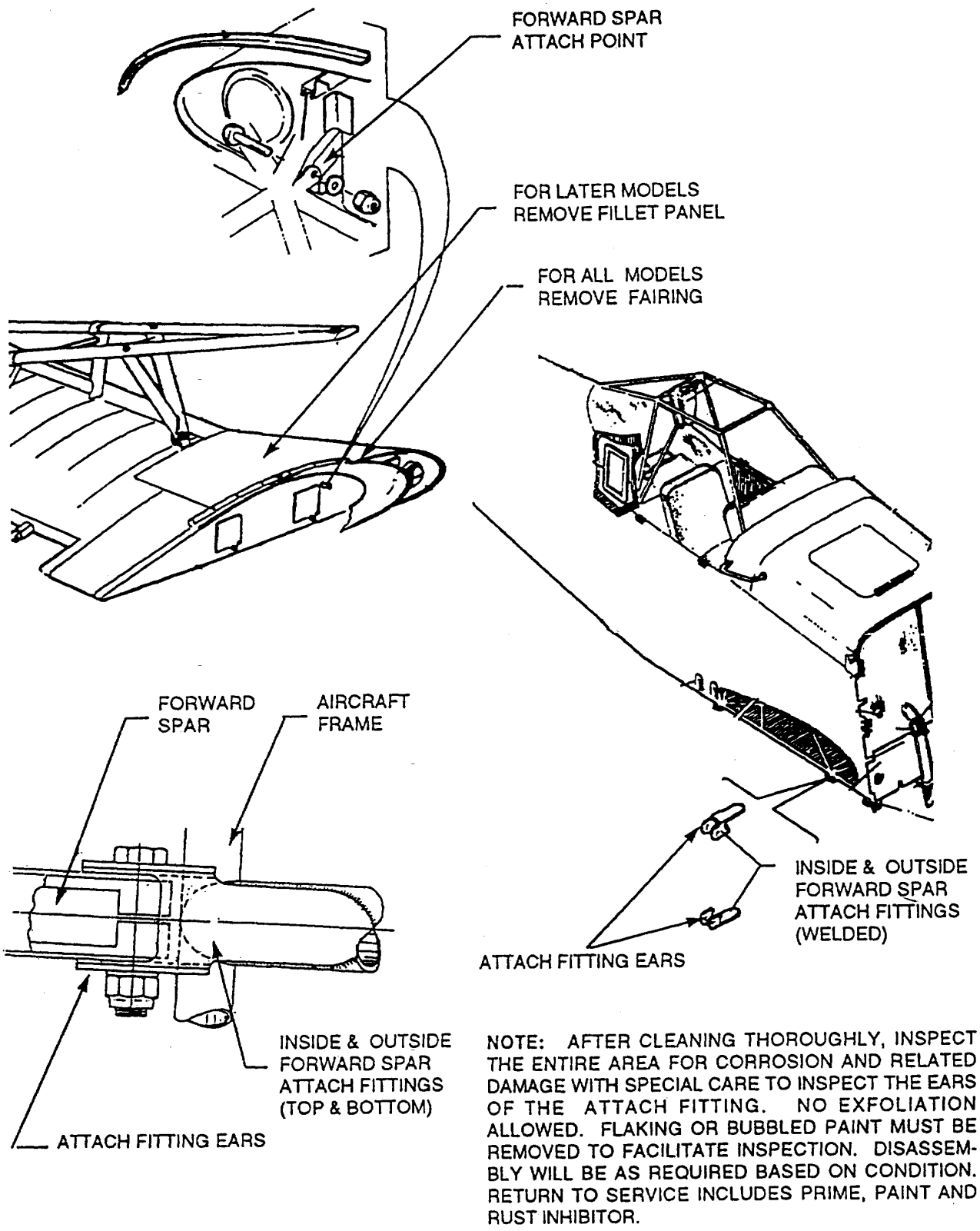

NOTE: AFTER CLEANING THOROUGHLY, INSPECT THE ENTIRE AREA FOR CORROSION AND RELATED DAMAGE WITH SPECIAL CARE TO INSPECT THE EARS OF THE ATTACH FITTING. NO EXFOLIATION ALLOWED. FLAKING OR BUBBLED PAINT MUST BE REMOVED TO FACILITATE INSPECTION. DISASSEMBLY WILL BE AS REQUIRED BASED ON CONDITION. RETURN TO SERVICE INCLUDES PRIME, PAINT AND RUST INHIBITOR.

FIGURE 1

PA-25
Side View of the Front Wing Fitting
and Landing Gear Fittings

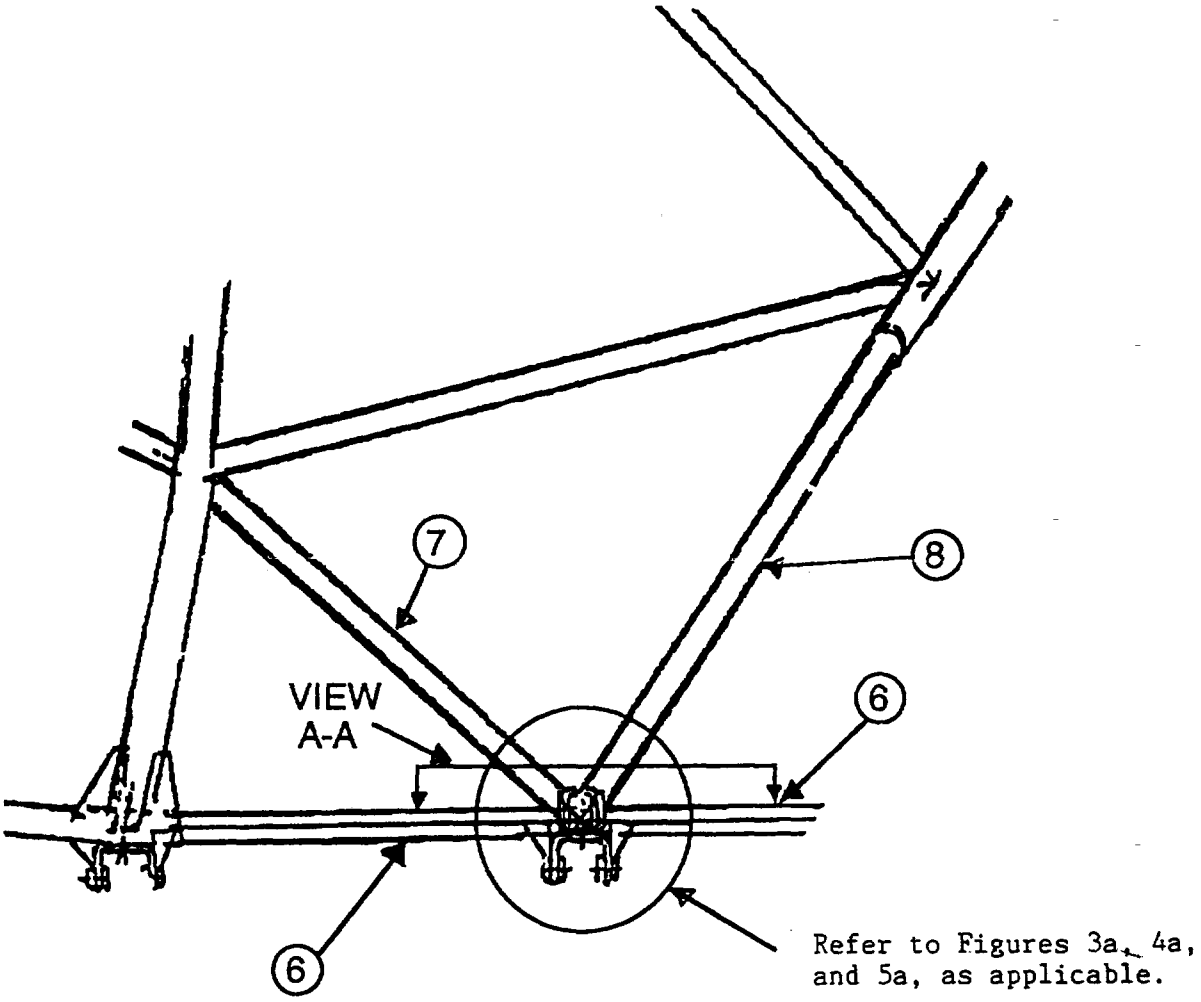

Figure 2

PA-25
S/N - ALL

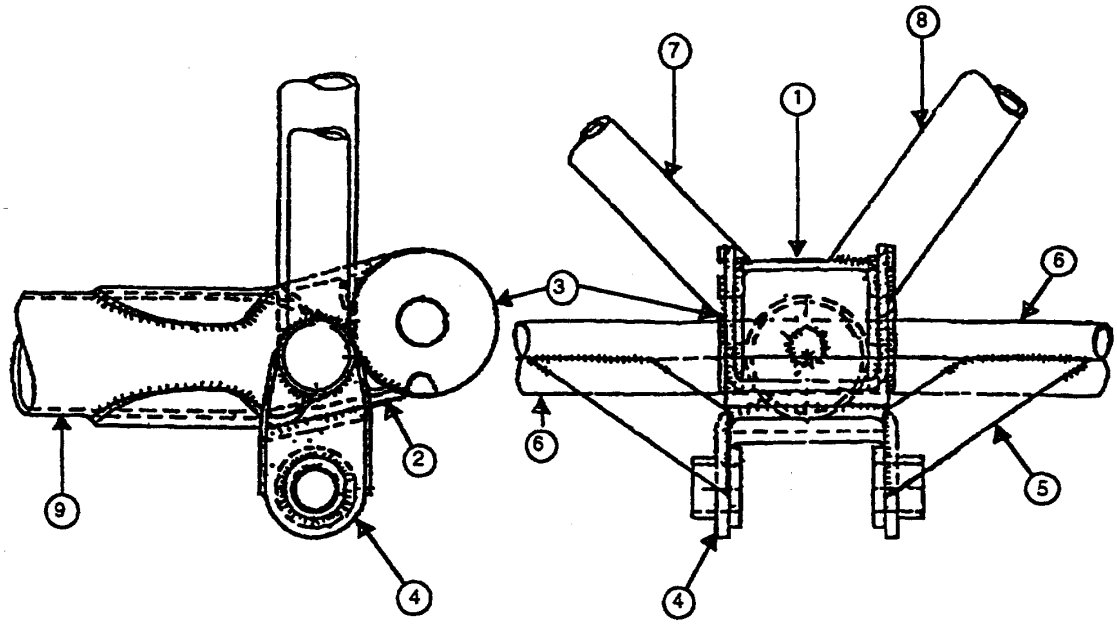

View Looking Aft

Side View

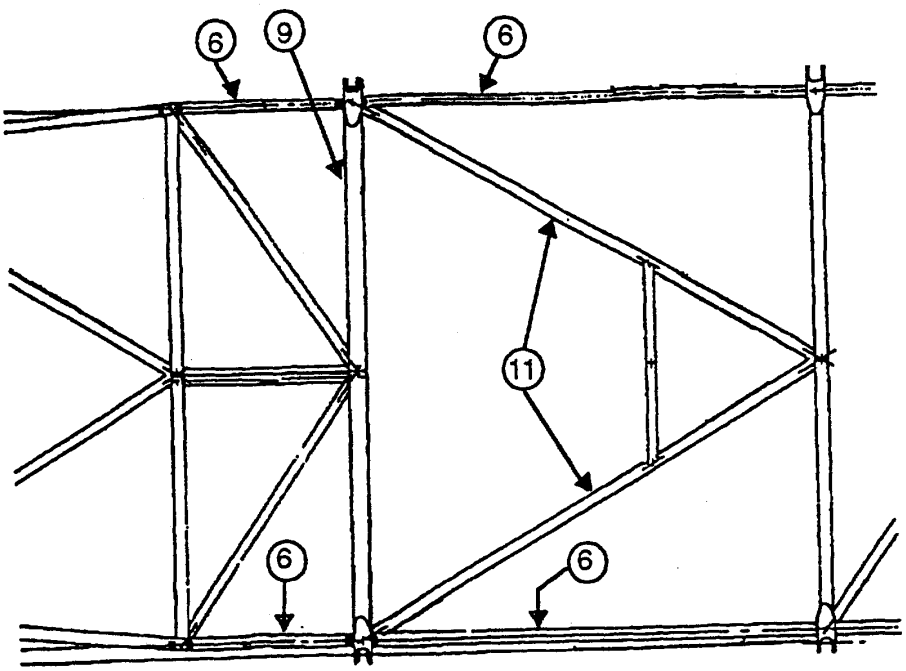

Bottom View (View A-A)
(Both Sides)

Figure 3a

PA-25
S/N - ALL
Front Wing Spar Attachment-Fittings and Tubes

NO.	DESCRIPTION	PART NO./TUBE DIMENSIONS
1	Front Spar Fitting	61006-0
2	Channel	61007-0
3	Fitting Assy-Front Spar	61005-0
4	Fitting Assy-Landing Gear	21242-2
5	Brace-Bracket	11994-28
6	Tube	.75 x .035 (4130) N **
7	Tube	.625 x .035 (4130) N **
8	Tube	.75 x .035 (4130) N **
9	Tube	1.25 x .058 (4130) N **
11	Tube	.625 x .028 (1025)

** - MIL-T-6736 Type 1

Figure 3b

PA-25-235
(S/N - 25-2000 To 25-2985)

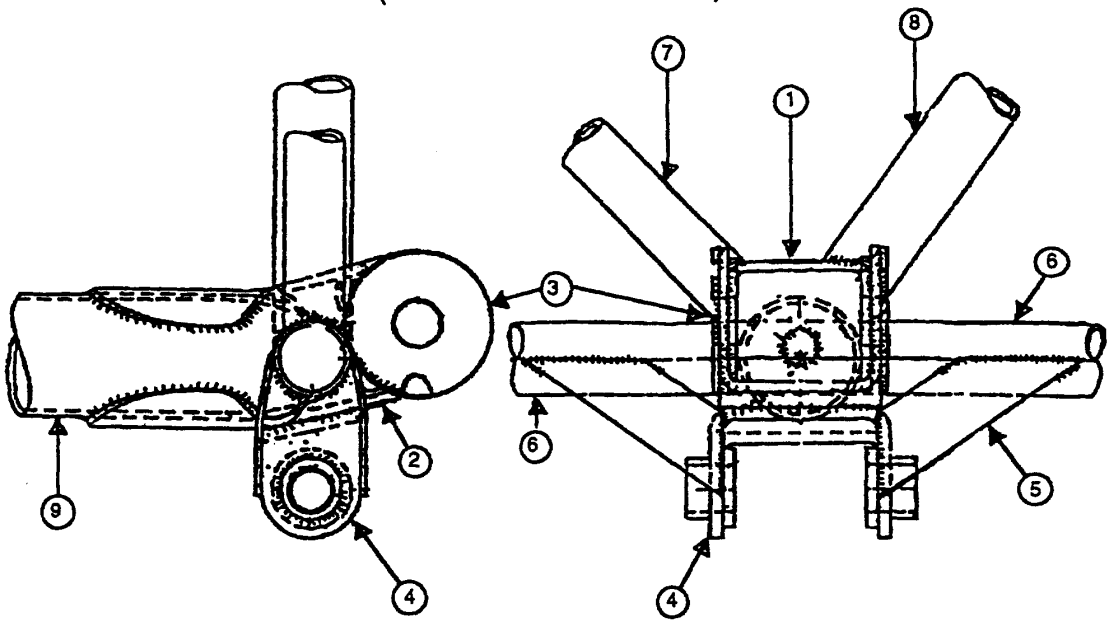

View Looking Aft

Side View

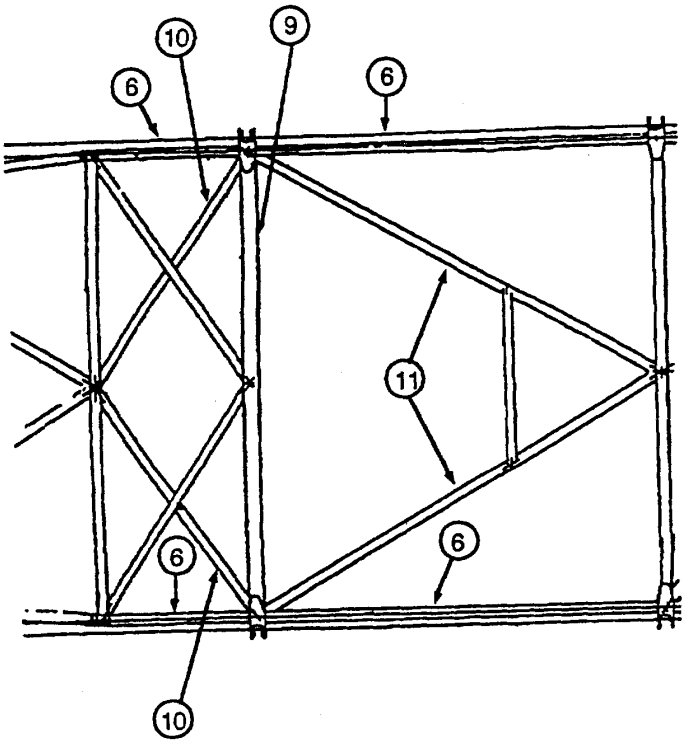

Bottom View (View A-A)
(Both Sides)

Figure 4a

PA-25-235
S/N - 25-2000 to 25-2985
Front Wing Spar Attachment-Fittings and Tubes

NO.	DESCRIPTION	PART NO./TUBE DIMENSIONS
1	Front Spar Fitting	64003-0
2	Channel	64175-0
3	Fitting Assy-Front Spar	64412-0
4	Fitting Assy-Landing Gear	64005-0 (L) 64005-1 (R)
5	Brace-Bracket	11994-28
6	Tube	.75 x .049 (4130) N **
7	Tube	.625 x .049 (4130) N **
8	Tube	.875 x .065 (4130) N **
9	Tube	1.25 x .095 (4130) N **
10	Tube	.75 x .049 (4130) N **
11	Tube	.625 x .028 (1025)

** - MIL-T-6736 Type 1

Figure 4b

PA-25-235, PA-25-260
S/N - 25-2986 and Up

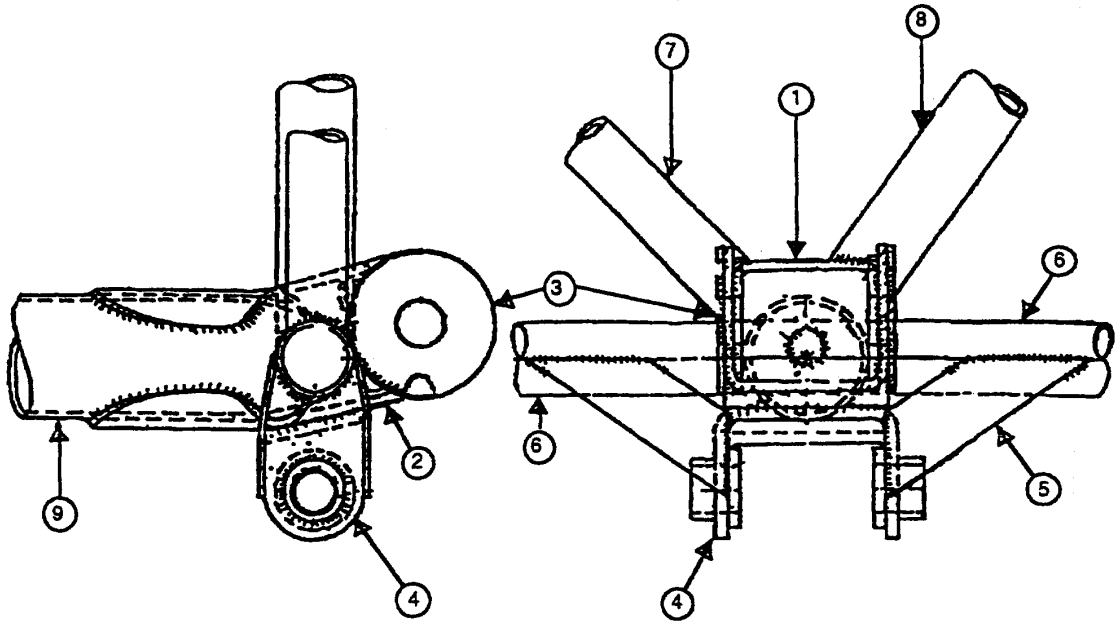

View Looking Aft

Side View

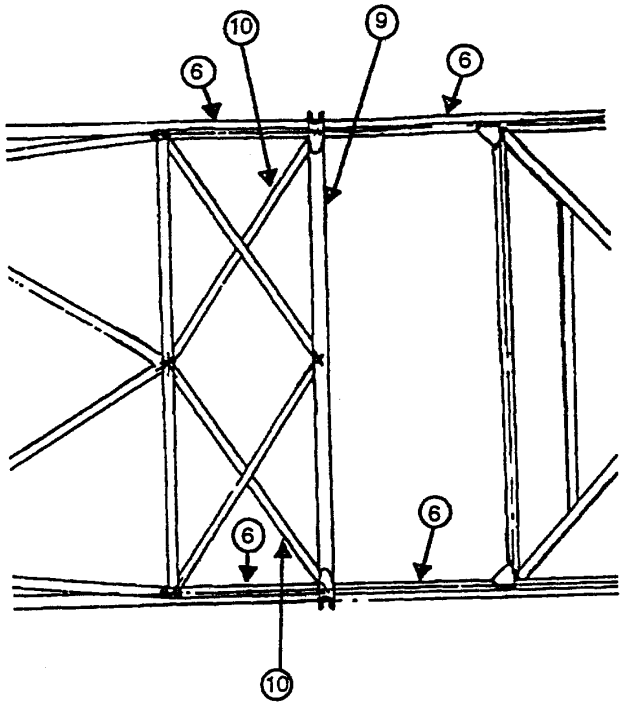

Bottom View (View A-A)
(Both Sides)

Figure 5a

PA-25-235,-260
S/N - 25-2986 and Up
Front Wing Spar Attachment-Fittings and Tubes

NO.	DESCRIPTION	PART NO. /TUBE DIMENSIONS
1	Front Spar Fitting	64003-0
2	Channel	64175-0
3	Fitting Assy-Front Spar	64412-0
4	Fitting Assy-Landing Gear	64005-0 (L) 64005-1 (R)
5	Brace-Bracket	11994-28
6	Tube	.75 x .049 (4130) N **
7	Tube	.625 x .049 (4130) N **
8	Tube	.875 x .065 (4130) N **
9	Tube	1.25 x .095 (4130) N **
10	Tube	.75 x .049 (4130) N **

** - MIL-T-6736 Type 1

Figure 5b

BILLING CODE 4910–13–C

Issued in Kansas City, Missouri, on May 25, 1995.

Henry A. Armstrong,

Acting Manager, Small Airplane Directorate, Aircraft Certification Service.

[FR Doc. 95–13468 Filed 6–1–95; 8:45 am]

BILLING CODE 4910–13–U

14 CFR Part 39

[Docket No. 94–NM–240–AD; Amendment 39–9255; AD 95–12–05]

Airworthiness Directives; Lockheed Model 382 Series Airplanes

AGENCY: Federal Aviation Administration, DOT.

ACTION: Final rule.

SUMMARY: This amendment supersedes an existing airworthiness directive (AD), applicable to certain Lockheed Model 382 series airplanes, that currently requires a revision to the Airplane Flight Manual to require takeoff operation in accordance with revised performance data. This amendment requires installation of certain valve housings for the propeller governor on the outboard engines. This amendment is prompted by a report of a change that had been incorporated into the propeller governor of these airplanes during production, which altered the thrust decay characteristic of the propeller when operating in an engine failure scenario. The actions specified by this AD are intended to ensure that the airplane maintains adequate thrust decay characteristics in the event of critical engine failure during takeoff.

DATES: Effective July 3, 1995.

The incorporation by reference of Lockheed Airplane Flight Manual Supplement 382–16, dated August 11, 1993, as listed in the regulations, was approved previously by the Director of the Federal Register as of August 10, 1994 (59 FR 35236, July 11, 1994).

ADDRESSES: The service information referenced in this AD may be obtained from Lockheed Aeronautical Systems Support Company (LASSC), Field Support Department, Dept. 693, Zone 0755, 2251 Lake Park Drive, Smyrna, Georgia 30080. This information may be examined at the Federal Aviation Administration (FAA), Transport Airplane Directorate, Rules Docket, 1601 Lind Avenue SW., Renton, Washington; or at the FAA, Atlanta Aircraft Certification Office, Small Airplane Directorate, Campus Building, 1701 Columbia Avenue, Suite 2–160, College Park, Georgia; or at the Office of the Federal Register, 800 North Capitol Street NW., suite 700, Washington, DC.

FOR FURTHER INFORMATION CONTACT: Thomas Peters, Aerospace Engineer, FAA, Flight Test Branch, ACE–160, Small Airplane Directorate, Atlanta Aircraft Certification Office, Campus Building, 1701 Columbia Avenue, Suite 2–160, College Park, Georgia 30337–2748; telephone (404) 305–7367; fax (404) 305–7348.

SUPPLEMENTARY INFORMATION: A proposal to amend part 39 of the Federal Aviation Regulations (14 CFR part 39) by superseding AD 94–14–09, amendment 39–8961 (59 FR 35236, July 11, 1994), which is applicable to certain Lockheed Model 382 series airplanes, was published in the **Federal Register** on February 8, 1995 (60 FR 7480). The action proposed to require removal of any servo-type valve housing assembly, having part number 714325–2, –3, –5, –6, or –7, installed on any outboard engine, and replacement of those assemblies with part number 714325–1.

Interested persons have been afforded an opportunity to participate in the making of this amendment. Due consideration has been given to the single comment received.

The commenter supports the proposed rule.

After careful review of the available data, including the comment noted above, the FAA has determined that air safety and the public interest require the adoption of the rule as proposed.

There are approximately 112 Model 382, 382E, and 382G series airplanes of the affected design in the worldwide fleet. The FAA estimates that 18 airplanes of U.S. registry will be affected by this AD, that it will take approximately 8 work hours per airplane to accomplish the required actions, and that the average labor rate is $60 per work hour. Required parts will cost approximately $90,000 per airplane. Based on these figures, the total cost impact of the AD on U.S. operators is estimated to be $1,628,640, or $90,480 per airplane.

The FAA has been advised that the only U.S. operator of Lockheed Model 382 series airplanes has already equipped half of its fleet (9 airplanes) with the valve housing assembly that will be required by this rule. Therefore, the future economic cost of this rule on U.S. operators is now only $814,320.

The regulations adopted herein will not have substantial direct effects on the States, on the relationship between the national government and the States, or on the distribution of power and responsibilities among the various levels of government. Therefore, in accordance with Executive Order 12612, it is determined that this final rule does not have sufficient federalism implications to warrant the preparation of a Federalism Assessment.

For the reasons discussed above, I certify that this action (1) is not a ''significant regulatory action'' under Executive Order 12866; (2) is not a ''significant rule'' under DOT Regulatory Policies and Procedures (44 FR 11034, February 26, 1979); and (3) will not have a significant economic impact, positive or negative, on a substantial number of small entities under the criteria of the Regulatory Flexibility Act. A final evaluation has been prepared for this action and it is contained in the Rules Docket. A copy of it may be obtained from the Rules Docket at the location provided under the caption **ADDRESSES**.

List of Subjects in 14 CFR Part 39

Air transportation, Aircraft, Aviation safety, Incorporation by reference, Safety.

Adoption of the Amendment

Accordingly, pursuant to the authority delegated to me by the Administrator, the Federal Aviation Administration amends part 39 of the Federal Aviation Regulations (14 CFR part 39) as follows:

PART 39—AIRWORTHINESS DIRECTIVES

1. The authority citation for part 39 continues to read as follows:

Authority: 49 U.S.C. App. 1354(a), 1421 and 1423; 49 U.S.C. 106(g); and 14 CFR 11.89.

§ 39.13 [Amended]

2. Section 39.13 is amended by removing amendment 39–8961 (59 FR 35236, July 11, 1994), and by adding a new airworthiness directive (AD), amendment 39–9255, to read as follows:

95–12–05 Lockheed: Amendment 39–9255. Docket 94–NM–240–AD. Supersedes AD 94–14–09, Amendment 39–8961.

Applicability: Model 382, 382E, and 382G series airplanes; equipped with a servo-type valve housing assembly, having part number 714325–2, –3, –5, –6, or –7, installed on any outboard engine; certificated in any category.

Note 1: This AD applies to each airplane identified in the preceding applicability provision, regardless of whether it has been modified, altered, or repaired in the area subject to the requirements of this AD. For airplanes that have been modified, altered, or repaired so that the performance of the requirements of this AD is affected, the owner/operator must use the authority provided in paragraph (c) to request approval from the FAA. This approval may address either no action, if the current configuration eliminates the unsafe condition; or different actions necessary to address the unsafe

condition described in this AD. Such a request should include an assessment of the effect of the changed configuration on the unsafe condition addressed by this AD. In no case does the presence of any modification, alteration, or repair remove any airplane from the applicability of this AD.

Compliance: Required as indicated, unless accomplished previously.

To ensure that the airplane maintains adequate thrust decay characteristics in the event of critical engine failure during takeoff, accomplish the following:

(a) Within 60 days after August 10, 1994 (the effective date of AD 94–14–09, amendment 39–8961), revise the Limitations and Performance Data Sections of the FAA-approved Airplane Flight Manual (AFM) to include information specified in Lockheed Airplane Flight Manual Supplement 382–16, dated August 11, 1993, and operate the airplane accordingly thereafter. The requirements of this paragraph may be accomplished by inserting AFM Supplement 382–16 into the AFM.

(b) Within 24 months after the effective date of this AD, replace the servo-type valve housing assemblies having part number 714325–2, –3, –5, –6, or –7, with part number 714325–1, on the propeller governors installed on the outboard engines, in accordance with Lockheed Document SMP–515C, Card No. CO–135. Replacement of these assemblies with part number 714325–1, constitutes terminating action for the requirements of paragraph (a) of this AD; once the replacement is accomplished, the AFM revision may be removed.

Note 2: Propeller governors with servo-type valve housing assemblies having part number 714325–2, –3, –5, –6, or –7, may be retained or replaced with part number 714325–1 for use on the inboard engine positions.

(c) An alternative method of compliance or adjustment of the compliance time that provides an acceptable level of safety may be used if approved by the Manager, Atlanta Aircraft Certification Office (ACO), FAA, Small Airplane Directorate. Operators shall submit their requests through an appropriate FAA Principal Maintenance Inspector, who may add comments and then send it to the Manager, Atlanta ACO.

Note 3: Information concerning the existence of approved alternative methods of compliance with this AD, if any, may be obtained from the Atlanta ACO.

(d) Special flight permits may be issued in accordance with sections 21.197 and 21.199 of the Federal Aviation Regulations (14 CFR 21.197 and 21.199) to operate the airplane to a location where the requirements of this AD can be accomplished.

(e) The AFM revision shall be done in accordance with Lockheed Airplane Flight Manual Supplement 382–16, dated August 11, 1993. The incorporation by reference of this document was approved previously by the Director of the Federal Register in accordance with 5 U.S.C. 552(a) and 1 CFR part 51 as of August 10, 1994 (59 FR 35236, July 11, 1994). Copies may be obtained from Lockheed Aeronautical Systems Support Company (LASSC), Field Support Department, Dept. 693, Zone 0755, 2251 Lake Park Drive, Smyrna, Georgia 30080. Copies may be inspected at the FAA, Transport Airplane Directorate, 1601 Lind Avenue, SW., Renton, Washington; or at the FAA, Atlanta Aircraft Certification Office, Small Airplane Directorate, Campus Building, 1701 Columbia Avenue, Suite 2–160, College Park, Georgia; or at the Office of the Federal Register, 800 North Capitol Street, NW., suite 700, Washington, DC.

(f) This amendment becomes effective on July 3, 1995.

Issued in Renton, Washington, on May 26, 1995.

Darrell M. Pederson,

Acting Manager, Transport Airplane Directorate, Aircraft Certification Service.

[FR Doc. 95–13505 Filed 6–1–95; 8:45 am]

BILLING CODE 4910–13–U

---

14 CFR Part 71

[Airspace Docket No. 95–ACE–6]

Alteration of Class E Airspace Area; St. Louis, MO

AGENCY: Federal Aviation Administration (FAA), DOT.

ACTION: Final rule; correction.

SUMMARY: This document corrects a final rule published on May 3, 1995, that inadvertently removed the St. Louis, MO, Class E5 airspace designation. This action reflects the FAA's original intent to revise the St. Louis, MO, Class E5 airspace designation to exclude the Weiss Municipal Airport from the airspace designation. This action is a result of the closure of the Weiss Municipal Airport.

EFFECTIVE DATE: 0901 UTC, May 3, 1995.

FOR FURTHER INFORMATION CONTACT: Patricia P. Crawford, Airspace and Obstruction Evaluation Branch (ATP–240), Airspace-Rules and Aeronautical Information Division, Air Traffic Rules and Procedures Service, Federal Aviation Administration, 800 Independence Avenue, SW., Washington, DC 20591; telephone: (202) 267–9255.

SUPPLEMENTARY INFORMATION: On May 3, 1995, the FAA published a final rule that removed the St. Louis, MO, Class E5 airspace designation (60 FR 21700). However, that action inadvertently removed the St. Louis, MO, Class E5 airspace area. This action reflects the FAA's original intent to revise the St. Louis, MO, Class E5 airspace designation to exclude the Weiss Municipal Airport from the airspace designation.

Correction of Final Rule

Accordingly, pursuant to the authority delegated to me, the publication in the **Federal Register** on May 3, 1995 (60 FR 21700, **Federal Register** Document 95–10772), and the corresponding description in FAA Order 7400.9B, which is incorporated by reference in 14 CFR 71.1, are corrected as follows:

§ 71.1 [Corrected]

* * * * *

ACE MO E5 St. Louis, MO [Revised]
Lambert-St. Louis International Airport
(Lat. 38°44′51″ N, long. 90°21′36″ W)
Spirit of St. Louis Airport, MO
(Lat. 38°39′43″ N, long. 90°39′00″ W)
St. Louis Regional Airport, Alton, IL
(Lat. 38°53′25″ N, long. 90°02′45″ W)
St. Charles County Smartt Airport, St. Charles, MO
(Lat. 38°55′47″ N, long. 90°25′47″ W)
St. Louis VORTAC
(Lat. 38°51′38″ N, long. 90°28′57″ W)
Foristell VORTAC
(Lat. 38°41′40″ N, long. 90°58′17″ W)
ZUMAY LOM
(Lat. 38°47′17″ N, long. 90°16′44″ W)
OBLIO LOM
(Lat. 38°48′01″ N, long. 90°28′29″ W)
Civic Memorial NDB
(Lat. 38°53′32″ N, long. 90°03′23″ W)

That airspace extending upward from 700 feet above the surface within a 6-mile radius of the Lambert-St. Louis International Airport and within 4 miles southeast and 7 miles northwest of the Lambert-St. Louis International Airport Runway 24 ILS localizer course extending from the airport to 10.5 miles northeast of the ZUMAY LOM and within 4 miles southwest and 7.9 miles northeast of the Lambert-St. Louis Airport Runway 12R ILS localizer course extending from the airport to 10.5 miles northwest of the OBLIO LOM and within 4 miles southwest and 7.9 miles northeast of the Lambert-St. Louis Airport Runway 30L ILS localizer southeast course extending from the airport to 8.7 miles southeast of the airport and within a 6-mile radius of Spirit of St. Louis Airport and within 2.6 miles each side of the 098° radial of the Foristell VORTAC extending from the 6-mile radius area to 8.3 miles west of the airport and within a 6-mile radius of St. Charles County Smartt Airport, and within a 6-mile radius of St. Louis Regional Airport, and within 4 miles each side of the 014° bearing from the Civic Memorial NDB extending from the 6-mile radius to 7 miles north of the airport and within 4.4 miles each side of the 190° radial of the St. Louis VORTAC extending from 2 miles south of the VORTAC to 22.1 miles south of the VORTAC.

* * * * *

Issued in Washington, DC, on May 26, 1995.

Harold W. Becker,

Manager, Airspace—Rules and Aeronautical Information Division.

[FR Doc. 95–13456 Filed 5–26–95; 3:59 pm]

BILLING CODE 4910–13–P

SECURITIES AND EXCHANGE COMMISSION

17 CFR Parts 200 and 240

[Release No. 34–35775; File No. S7–3–94]

Recordkeeping and Reporting Requirements for Trading Systems Operated by Brokers and Dealers; Delegation of Authority

AGENCY: Securities and Exchange Commission.

ACTION: Final rule; change of effective date.

SUMMARY: The Securities and Exchange Commission (''Commission'') is postponing the effective date that registered broker-dealer sponsors of certain automated trading systems (as defined in Rule 17a–23) (''Broker-Dealer Trading Systems'') must comply with the recordkeeping requirements of Rule 17a–23 under Section 17 of the Securities Exchange Act of 1934 from June 1, 1995 to July 1, 1995, in order to facilitate the process of conversion to a standard trade settlement time frame of three business days after the trade date. In addition, the Commission is amending its regulation concerning Organization and Program Management [1] to delegate authority to the Director of the Division of Market Regulation (''Division'') to grant exemptions to any sponsor, or class of sponsors, of a Broker-Dealer Trading System or Systems from any or all of the provisions of Rule 17a–23, either unconditionally or on specified terms and conditions, if the Director of the Division determines that such exemption is consistent with the public interest or the protection of investors.

EFFECTIVE DATE: The effective date for § 240.17a–23(c), which was published on December 28, 1994, 59 FR 66702, is postponed until July 1, 1995. The effective date for the delegation of authority (§ 200.30–3(a)(60)) will be June 2, 1995.

FOR FURTHER INFORMATION CONTACT: Sheila C. Slevin, Assistant Director, 202/942–0796, or Elaine M. Darroch, Staff Attorney, 202/942–0798, Office of Automation and International Markets, Division of Market Regulation, Securities and Exchange Commission, 450 Fifth Street NW., Mail Stop 5–1, Washington, D.C. 20549.

SUPPLEMENTARY INFORMATION:

I. Introduction and Background

The Commission today announced that it is changing the date for registered broker-dealer sponsors of certain automated systems to comply with recordkeeping requirements of Rule 17a–23 [2] under Section 17 of the Act from June 1, 1995 to July 1, 1995; and (2) amending the Commission's regulation concerning Organization and Program Management to delegate to the Director of the Division the authority to grant exemptions from the requirements of Rule 17a–23.

Effective June 1, 1995, Rule 17a–23 and Form 17A–23 establish recordkeeping and reporting requirements for registered brokers and dealers that operate certain automated trading systems (''Broker-Dealer Trading System'' or ''BDTS'').[3] Under Rule 17a–23, registered broker-dealers that sponsor BDTSs are required to maintain participant, volume, and transaction records. In addition, Rule 17a–23 and Form 17A–23 require system sponsors to submit three reports to the Commission and, under certain circumstances, to an appropriate self-regulatory agency: (1) An initial system description (Part I of Form 17A–23), updated as necessary to reflect material changes (Part IA of Form 17A–23); (2) quarterly volume summaries (Part II of Form 17A–23); and (3) notice of ceasing to operate the system (Part III of Form 17A–23). At final adoption, the Commission modified Rule 17a–23 to allow sponsors of Broker-Dealer Trading Systems currently operating on June 1, 1995 to submit the information required by Part I of Form 17A–23 no later than July 1, 1995 (one month following the effective date). Due to extenuating circumstances, the Division has determined that system sponsors also should be allowed to delay compliance with the recordkeeping provisions of Rule 17a–23(c) until July 1, 1995.

II. Extension of Deadline for Recordkeeping Requirements

The Commission is extending the deadline for complying with recordkeeping requirements of Rule 17a–23 from June 1, 1995 to July 1, 1995. The effective date for provisions of Rule 17a–23 other than Rule 17a–23(c) remains June 1, 1995, unless otherwise noted in the final rule published December 28, 1994 (59 FR 66702). As noted previously, at final adoption the Commission modified the Rule to allow sponsors of BDTSs currently operating on June 1 to delay compliance with the reporting requirements of Rule 17a–23(d) until July 1, 1995. BDTS sponsors have requested that the Commission similarly delay effectiveness of the recordkeeping requirements of the Rule.

BDTSs have informed the Commission that reconfiguring their automated systems to comply with the recordkeeping requirements of Rule 17a–23(c) by June 1, 1995 would be difficult, because a significant portion of their automation resources are committed to implementing system changes necessary to comply with Rule 15c6–1 [4] by June 7, 1995. Rule 15c6–1 establishes the standard settlement time frame to be three business days after the trade date (''T+3''). In some cases, sponsors have informed the Commission that compliance with Rule 17a–23(c) recordkeeping requirements by June 1, 1995 may delay or adversely affect the broker-dealers' implementation of system changes necessary to comply with T+3. In recognition of the importance of T+3 in reducing settlement risk, and in reducing the liquidity risk among the derivatives and the cash markets, and because the conversion to T+3 will affect a substantial portion of the securities industry, the Commission believes it is important to allow the T+3 conversion to take place in an orderly fashion.

Accordingly, the Commission is postponing the effective date for Rule 17a–23(c) until July 1, 1995.

III. Delegation of Authority to the Director of the Division of Market Regulation

The Commission currently has the authority under Rule 17a–23(i) [5] to grant exemptions to any sponsor of a Broker-Dealer Trading System from any or all of the provisions of Rule 17a–23, either unconditionally or on specified terms and conditions, if the Commission determines that the exemption is consistent with the public interest and the protection of investors. The Commission has determined it should revise its rules to delegate this authority to the Director of the Division of Market Regulation.

Accordingly, the Commission announced today an amendment to Rule 30–3 of its regulation concerning Organization and Program Management by adding paragraph (a)(60), which authorizes the Director of the Division, pursuant to Rule 17a–23(i),[6] to grant exemptions to any sponsor, or class of sponsors, of a Broker-Dealer Trading System or Systems from any or all of the provisions of Rule 17a–23, either

[1] 17 CFR 200.30–3.

[2] 17 CFR 240.17a–23.

[3] Securities Exchange Act Release No. 35124 (December 20, 1994), 59 FR 66702.

[4] 17 CFR 240.15c6–1.

[5] 17 CFR 240.17a–23(i).

[6] 17 CFR 240.17a–23(i).

unconditionally or on specified terms and conditions, if the Director of the Division determines that such exemption is consistent with the public interest or the protection of investors.

The delegation of this authority will conserve the resources of the Commission and the Division, by providing for the Division to handle exemption requests rather than requiring exemption requests to be handled by the Commission itself. In any particular case where the Director of the Division believes it appropriate, the Director of the Division may submit a request for an exemption to the Commission for review.

The Commission finds, in accordance with Section 553(b)(A) of the Administrative Procedures Act,[7] that the amendment to Rule 30–3 relates solely to agency organization, procedure, or practice, and does not relate to a substantive rule. Accordingly, requirements for notice, opportunity for public comment, and publication of the amendment prior to its effective date would not apply in these circumstances.

List of Subjects in 17 CFR Part 200

Administrative practice and procedure, Authority delegation (Government agencies), Organization and functions (Government agencies).

Text of Amendment

In accordance with the foregoing, Title 17, Chapter II of the Code of Federal Regulations is amended as follows:

PART 200—ORGANIZATION; CONDUCT AND ETHICS; AND INFORMATION AND REQUESTS

Subpart A—Organization and Program Management

1. The authority citation for part 200, subpart A, continues to read in part as follows:

Authority: 15 U.S.C. 77s, 78d–1, 78d–2, 78w, 78*ll*(d), 79t, 77sss, 80a–37, 80b–11, unless otherwise noted.

* * * * *

2. Section 200.30–3 is amended by adding paragraph (a)(60) to read as follows:

§ 200.30–3 Delegation of authority to Director of Division of Market Regulation.

* * * * *

(a) * * *

(60) To grant exemptions from Rule 17a–23 (§ 240.17a–23 of this chapter), pursuant to Rule 17a–23(i) (§ 240.17a–23(i) of this chapter).

* * * * *

[7] 5 U.S.C. 553(b)(A).

Dated: May 26, 1995.

By the Commission.

Margaret H. McFarland,

Deputy Secretary.

[FR Doc. 95–13465 Filed 6–1–95; 8:45 am]

BILLING CODE 8010–01–P

DEPARTMENT OF JUSTICE

Drug Enforcement Administration

21 CFR Part 1308

[DEA–126F]

Schedules of Controlled Substances; Placement of 4-Bromo-2,5-Dimethoxyphenethylamine Into Schedule I

AGENCY: Drug Enforcement Administration, Justice,

ACTION: Final rule.

SUMMARY: This final rule is issued by the Deputy Administrator of the Drug Enforcement Administration (DEA) to place 4-bromo-2,5-dimethoxyphenethylamine (4-bromo-2,5-DMPEA) into Schedule I of the Controlled Substances Act (CSA). This action is based on findings made by the Deputy Administrator of the DEA, after review and evaluation of the relevant data by both DEA and the Assistant Secretary for Health, Department of Health and Human Services, that 4-bromo-2,5-DMPEA meets the statutory criteria for inclusion in Schedule I of the CSA. Since this substance has been temporarily placed in Schedule I, the regulatory controls and criminal sanctions of Schedule I will continue to be applicable to the manufacture, distribution, importation, exportation and possession of 4-bromo-2,5-DMPEA.

EFFECTIVE DATE: June 2, 1995.

FOR FURTHER INFORMATION CONTACT: Howard McClain, Jr., Chief, Drug and Chemical Evaluation Section, Drug Enforcement Administration, Washington, DC 20537, Telephone: (202) 307–7183.

SUPPLEMENTARY INFORMATION: On December 20, 1994, in a notice of proposed rulemaking published in the **Federal Register** (59 FR 65521) and after a review of relevant data, the Deputy Administrator of the DEA proposed to place 4-bromo-2,5-DMPEA into Schedule I of the CSA pursuant to 21 U.S.C. 811(a). Prior to this time, the Deputy Administrator submitted data which DEA gathered regarding the trafficking, actual abuse and relative potential for abuse for 4-bromo-2,5-DMPEA to the Assistant Secretary for Health, delegate of the Secretary of the Department of Health and Human Services. In accordance with 21 U.S.C. 811(b), the Deputy Administrator also requested a scientific and medical evaluation and a scheduling recommendation for 4-bromo-2,5-DMPEA from the Assistant Secretary for Health.

4-Bromo-2,5-DMPEA had been temporarily placed into Schedule I of the CSA on January 6, 1994 for a period of one year (59 FR 671) pursuant to the temporary scheduling provisions of the CSA (21 U.S.C. 811(h)). The temporary scheduling of 4-bromo-2,5-DMPEA subsequently was extended for six months until July 6, 1995 (59 FR 65710). The temporary scheduling was based on the finding by the DEA Acting Administrator that such action was necessary to avoid an imminent hazard to the public safety.

By letter dated April 28, 1995, the Deputy Administrator for the DEA received the scientific and medical evaluation and a scheduling recommendation from the Assistant Secretary for Health. The Assistant Secretary recommended that 4-bromo-2,5-DMPEA be placed into Schedule I of the CSA based on a scientific and medical evaluation of the available data.

The notice or proposed rulemaking for 4-bromo-2,5-DMPEA provided the opportunity for interested parties to submit comments, objections or requests for a hearing regarding this scheduling. No comments, objections or requests for hearings were received regarding the scheduling of 4-bromo-2,5-DMPEA in the CSA.

4-Bromo-2,5-DMPEA is structurally similar to the Schedule I phenylisopropylamine hallucinogens, 4-methyl-2,5-dimethoxyamphetamine (DOM) and 4-bromo-2,5-dimethoxyamphetamine (DOB). Like DOM and DOB, 4-bromo-2,5-DMPEA displays high affinity for central serotonin receptors and is capable of substituting for DOM or DOB in drug discrimination studies conducted in rats. These data suggest that 4-bromo-2,5-DMPEA is a psychoactive substance capable of producing effects similar, though not identical, to DOM and DOB. Data from human studies indicate that 4-bromo-2,5-DMPEA is orally active at 0.1–0.2 mg/kg producing an intoxication with considerable euphoria and sensory enhancement which lasts for 6 to 8 hours. Higher doses have been reported to produce intense and frightening hallucinations.

The DEA first encountered 4-bromo-2,5-DMPEA in 1979. Since that time, several exhibits of 4-bromo-2,5-DMPEA have been analyzed by Federal and state forensic laboratories in Arizona,

California, Colorado, Georgia, Illinois, Iowa, Kentucky, Oregon, Pennsylvania and Texas. Clandestine laboratories producing 4-bromo-2,5-DMPEA were seized in California in 1986 and 1994 and in Arizona in 1992. It has been represented as 3,4-methylenedioxymethamphetamine (MDMA) and has been sold in adulterated sugar cubes as LSD. 4-Bromo-2,5-DMPEA has been promoted as an aphrodisiac and distributed under the product name of Nexus. DEA has seized several thousand dosage units of this product.

The Food and Drug Administration (FDA) has notified the DEA that there are no exemptions or approvals in effect under Section 505 of the Federal Food, Drug, and Cosmetic Act for 4-bromo-2,5-DMPEA. A search of the scientific and medical literature pertaining to 4-bromo-2,5-DMPEA revealed no indications of current medical use in treatment in the United States.

Based on the information gathered and reviewed by DEA and upon the scientific and medical evaluation and recommendation of the Assistant Secretary for Health, the Deputy Administrator for the DEA, pursuant to the provisions of 21 U.S.C. 811 (a) and (b), finds that:

(1) 4-bromo-2,5-DMPEA has a high potential for abuse.

(2) 4-bromo-2,5-DMPEA has no currently accepted medical use in treatment in the United States.

(3) There is a lack of accepted safety for use of 4-bromo-2,5-DMPEA under medical supervision.

These findings are consistent with the placement of 4-bromo-2,5-DMPEA into Schedule I of the CSA.

All regulations applicable to Schedule I substances continue to be in effect as of June 2, 1995, with respect to 4-bromo-2,5-DMPEA. This substance has been in Schedule I pursuant to the temporary scheduling provisions of 21 U.S.C. 811(h) since January 6, 1994. The current applicable regulations are as follows:

1. *Registration.* Any person who manufactures, distributes, delivers, imports or exports 4-bromo-2,5-DMPEA or who engages in research or conducts instructional activities with respect to 4-bromo-2,5-DMPEA or who proposes to engage in such activities, must be registered to conduct such activity in accordance with parts 1301 and 1311 of title 21 of the Code of Federal Regulations.

2. *Security.* 4-bromo-2,5-DMPEA must be manufactured, distributed and stored in accordance with §§ 1301.71–1301.76 of title 21 of the Code of Federal Regulation.

3. *Labeling and Packaging.* All labels and labeling for commercial containers of 4-bromo-2,5-DMPEA must comply with §§ 1302.03–1302.05, 1302.07 and 1302.08 of title 21 of the Code of Federal Regulations.

4. *Quotas.* All persons required to obtain quotas for 4-bromo-2,5-DMPEA shall submit applications pursuant to §§ 1303.12 and 1303.22 of title 21 of the Code of Federal Regulations.

5. *Inventory.* Every registrant required to keep records and who possesses any quantity of 4-bromo-2,5-DMPEA shall take an inventory of all stocks of 4-bromo-2,5-DMPEA on hand pursuant to §§ 1304.11–1304.19 of title 21 of the Code of Federal Regulations.

6. *Records.* All registrants required to keep records pursuant to §§ 1304.21–1304.27 of title 21 of the Code of Federal Regulations shall maintain such records with respect to 4-bromo-2,5-DMPEA.

7. *Reports.* All registrants required to submit reports pursuant to §§ 1304.34–1304.37 of title 21 of the Code of Federal Regulations shall do so regarding 4-bromo-2,5-DMPEA.

8. *Order Forms.* All registrants involved in the distribution of 4-bromo-2,5-DMPEA must comply with §§ 1305.01–1305.16 of title 21 of the Code of Federal Regulations.

9. *Importation and Exportation.* All importation and exportation of 4-bromo-2,5-DMPEA shall be in compliance with part 1312 of title 21 of the Code of Federal Regulations.

10. *Criminal Liability.* Any activity with respect to 4-bromo-2,5-DMPEA not authorized by, or in violation of, the CSA or the Controlled Substances Import and Expert Act shall be unlawful.

The Deputy Administrator of the DEA hereby certifies that final placement of 4-bromo-2,5-DMPEA into Schedule I of the CSA will have no significant impact upon entities whose interests must be considered under the Regulatory Flexibility Act, 5 U.S.C. 601 *et seq.* This action involves the control of a substance with no currently accepted medical use in treatment in the United States.

In accordance with the provisions of 21 U.S.C. 811(a), this scheduling action is a formal rulemaking. Such proceedings are conducted pursuant to the provisions of 5 U.S.C. 556 and 557 and, as such, are exempt from review by the Office of Management and Budget pursuant to Executive Order (E.O.) 12866, 3(d)(1).

This action has been analyzed in accordance with the principles and criteria in E.O. 12612, and it has been determined that this final rule does not have sufficient federalism implications to warrant the preparation of a Federalism Assessment.

List of Subjects in 21 CFR Part 1308

Administrative practice and procedure, drug traffic control, narcotics, prescription drugs.

Under the authority vested in the Attorney General by section 201(a) of the CSA (21 U.S.C. 811(a)), and delegated to the Administrator of the DEA by the Department of Justice regulations (28 CFR 0.100) and redelegated to the Deputy Administrator pursuant to 28 CFR 0.104, the Deputy Administrator hereby orders that 21 CFR part 1308 be amended as follows:

PART 1308—SCHEDULES OF CONTROLLED SUBSTANCES

1. The authority citation for 21 CFR part 1308 continues to read as follows:

Authority: 21 U.S.C. 811, 812, 871b, unless otherwise noted.

2. Section 1308.11 is amended by redesignating the existing paragraphs (d)(3) through (d)(30) as (d)(4) through (d)(31) and adding a new paragraph (d)(3) to read as follows:

§ 1308.11 Schedule I.

* * * * *

(d) * * *

(3) 4-Bromo-2,5-dimethoxyphenethylamine 7392

Some trade or other names: 2-(4-bromo-2,5-dimethoxyphenyl)-1-aminoethane; alpha-desmethyl DOB; 2C-B, Nexus.

* * * * *

3. Section 1308.11 is further amended by removing paragraph (g)(3).

Dated: May 25, 1995.

Stephen H. Greene,

Deputy Administrator.

[FR Doc. 95–13454 Filed 6–1–95; 8:45 am]

BILLING CODE 4410–09–M

DEPARTMENT OF THE TREASURY

Internal Revenue Service

26 CFR Part 301

[TD 8596]

RIN 1545–AL20

Payment of Excess Expenses Incurred by Purchaser in Connection With the Redemption of Real Property Under Internal Revenue Code Section 7425

AGENCY: Internal Revenue Service (IRS), Treasury.

ACTION: Final regulations.

SUMMARY: This document contains final regulations regarding the payment of excess expenses incurred by a purchaser at a nonjudicial sale in connection with redemptions of real property by the United States. These regulations affect purchasers in connection with the redemption of real property.

EFFECTIVE DATE: June 2, 1995.

FOR FURTHER INFORMATION CONTACT: Robert A. Walker, (202) 622–3640 (not a toll-free call).

SUPPLEMENTARY INFORMATION:

Background

These final regulations amend the Income Tax Regulations (26 CFR part 301) under section 7425 of the Internal Revenue Code (Code). The regulations impose a time limit within which a purchaser of real property at a nonjudicial sale may submit a claim for excess expenses to the United States when it is redeeming such real property. The United States will not consider any claim made after expiration of the time limits.

The IRS published a notice of proposed rulemaking in the **Federal Register** on May 23, 1994 (59 FR 26608) providing proposed rules under section 7425 of the Code. No public comments were received and accordingly, the final regulations adopt the proposed regulations with only technical changes.

Explanation of Provisions

Section 301.7425–4(b)(3)(ii) does not provide a specific time period within which the purchaser at a nonjudicial foreclosure sale may submit a claim for excess expenses after the redemption. These regulations clarify that claims for excess expenses must be submitted within the time periods specified in the regulations in order for the purchaser to be reimbursed.

The regulations establish a 15-day limit after a request is made by the district director for the purchaser at a nonjudicial sale or his or her successor in interest to furnish a written itemized statement of expenses in excess of income. Since excess expenses could be incurred after a district director's request, a purchaser who fails to submit a claim at this time may submit a claim within 30 days after the date of redemption. These limits will allow the purchaser a reasonable amount of time within which to determine the amount of any excess expenses and to submit a claim to the United States. After the expiration of the relevant time periods, the United States may distribute all surplus proceeds associated with the sale of the redeemed property unhindered by any possibility of a claim for excess expenses made in the future when the surplus proceeds of sale are no longer available to satisfy such a claim. Adding time limits will also expedite the handling of redemption sales by earlier disposition of surplus proceeds of sale. Disputes concerning properly submitted claims will still be resolved by the United States within a reasonable time after the redemption period.

Special Analyses

It has been determined that this Treasury decision is not a significant regulatory action as defined in EO 12866. Therefore, a regulatory assessment is not required. It has also been determined that section 553(b) of the Administrative Procedure Act (5 U.S.C. chapter 5) and the Regulatory Flexibility Act (5 U.S.C. chapter 6) do not apply to these regulations, and, therefore, a Regulatory Flexibility Analysis is not required. Pursuant to section 7805(f) of the Internal Revenue Code, the notice of proposed rulemaking was submitted to the Chief Counsel for Advocacy of the Small Business Administration for comment on its impact on small business.

Drafting Information. The principal author of these final regulations is Robert A. Walker, Office of Assistant Chief Counsel (General Litigation). However, other personnel from the IRS and Treasury Department participated in their development.

List of Subjects in 26 CFR Part 301

Employment taxes, Estate taxes, Excise taxes, Gift taxes, Income taxes, Penalties, Reporting and recordkeeping requirements.

Adoption of Amendments to the Regulations

Accordingly, 26 CFR part 301 is amended as follows:

PART 301—PROCEDURE AND ADMINISTRATION

Paragraph 1. The authority citation for part 301 continues to read, in part, as follows:

Authority: 26 U.S.C. 7805 * * *

Par. 2. In § 301.7425–4, paragraph (b)(3)(ii) is amended by revising the third sentence and adding a fourth sentence to read as follows:

§ 301.7425–4 Discharge of liens; redemption by United States.

* * * * *

(b) * * *

(3) * * *

(ii) * * * If a purchaser or his or her successor in interest has failed to furnish the written itemized statement within 15 days after the request therefor is made by the district director, or there is a disagreement as to the amount properly payable under paragraph (b)(1)(iii) of this section, or if there were additional excess expenses that were not claimed in the original itemized statement, the purchaser or his or her successor in interest may submit a written itemized statement to the district director within 30 days after the date of redemption. If the purchaser or his or her successor in interest fails to timely submit such a written itemized statement, no amount shall be payable for expenses in excess of income.

* * * * *

Approved: April 27, 1995.

Margaret Milner Richardson,

Commissioner of Internal Revenue.

Leslie Samuels,

Assistant Secretary of the Treasury.

[FR Doc. 95–13444 Filed 6–1–95; 8:45 am]

BILLING CODE 4830–01–U

ENVIRONMENTAL PROTECTION AGENCY

40 CFR Part 52

[NC59–2–6942a; NC55–1–6497a; NC54–1–6496a: FRL–5207–3]

Approval and Promulgation of Air Quality Implementation Plans; North Carolina; Basic Motor Vehicle Inspection and Maintenance Program

AGENCY: Environmental Protection Agency (EPA).

ACTION: Direct final rule.

SUMMARY: EPA is approving a state implementation plan (SIP) revision submitted on May 19, 1994, January 17, 1992, September 24, 1992 and August 5, 1994, by the State of North Carolina, through the North Carolina Department of Environmental Management (NCDEM). This revision modifies the implementation of a basic motor vehicle inspection and maintenance (I/M) program in the areas of Charlotte, Raleigh/Durham, and Winston-Salem, North Carolina.

DATES: This final rule will be effective on July 17, 1995 unless adverse or critical comments are received by July 3, 1995. If the effective date is delayed, timely notice will be published in the **Federal Register**.

ADDRESSES: Written comments on this action should be addressed to Benjamin Franco at the EPA Regional office listed below.

Copies of the documents relative to this action are available for public inspection during normal business

hours at the following locations. The interested persons wanting to examine these documents should make an appointment with the appropriate office at least 24 hours before the visiting day.

Air and Radiation Docket and Information Center (Air Docket), U.S. Environmental Protection Agency, 401 M Street, SW, Washington, DC 20460.

Environmental Protection Agency, Region 4, Air Programs Branch, 345 Courtland Street, NE, Atlanta, Georgia 30365.

Department of Environment, Health, and Natural Resources, P.O. Box 29535, Raleigh, North Carolina, 27626–0535.

FOR FURTHER INFORMATION CONTACT: Benjamin Franco, Mobile Source Planning Unit, Regulatory Planning and Development Section, Air Programs Branch, Air, Pesticides & Toxics Management Division, Environmental Protection Agency, Region 4, 345 Courtland Street, NE, Atlanta, Georgia 30365. The telephone number is 404/347–3555, extension 4211.

SUPPLEMENTARY INFORMATION:

I. Background

The Clean Air Act as amended in 1990 (the Act) requires that most ozone nonattainment areas adopt either ''basic'' or ''enhanced'' I/M programs, depending on the severity of the problem and the population of the area. The moderate ozone nonattainment areas, plus marginal ozone nonattainment areas with existing or previously required I/M programs, fall under the ''basic'' I/M requirements. Enhanced programs are required in serious, severe, and extreme ozone nonattainment areas with 1980 urbanized populations of 200,000 or more.

The Act requires states to make changes to improve existing I/M programs or to implement new ones for certain nonattainment areas. Section 182(a)(2)(B) of the Act directed EPA to publish updated guidance for state I/M programs, taking into consideration findings of the Administrator's audits and investigations of these programs. The Act further mandates each area required to have an I/M program to incorporate this guidance into the SIP. Based on these requirements, EPA promulgated I/M regulations on November 5, 1992 (57 FR 52950, codified at 40 Code of Federal Regulations (CFR) 51.350–51.373).

The I/M regulation establishes minimum performance standards for basic I/M programs as well as requirements for the following: network type and program evaluation; adequate tools and resources; test frequency and convenience; vehicle coverage; test procedures and standards; test equipment; quality control; waivers and compliance via diagnostic inspection; motorist compliance enforcement; motorist compliance enforcement program oversight; quality assurance; enforcement against contractors, stations and inspectors; data collection; data analysis and reporting; inspector training and licensing or certification; public information and consumer protection; improving repair effectiveness; compliance with recall notices; on-road testing; SIP revisions; and implementation deadlines. The performance standard for basic I/M programs remains the same as it has been since initial I/M policy was established in 1978, pursuant to the 1977 amendments to the Clean Air Act.

The State of North Carolina contains the Raleigh/Durham and Winston-Salem urbanized areas which were recently redesignated to attainment for ozone, and Charlotte which is designated nonattainment for ozone and classified as moderate. A redesignation request for the Charlotte nonattainment area was submitted by the State on November 12, 1993, with supplementary information provided on December 15, 1994. It is currently being reviewed by EPA. Section 51.372(b)(2) of the Federal I/M regulation (codified at 40 CFR 51.372(b)(2)) required affected states to submit full I/M SIP revisions that met the requirements of the Act to EPA by November 15, 1993.

On August 5, 1994, NCDEM submitted a complete SIP revision of the I/M program. This submittal includes new and revised regulations adopted by the North Carolina Department of Motor Vehicles (NCDMV) and the North Carolina Department of Environmental Management (NCDEM) and documentation addressing required portions of the Federal I/M rule.

Also, on May 19, 1993, January 17, 1992, and September 24, 1992, the State of North Carolina, through NCDEM submitted to EPA a revised SIP for the areas of Charlotte, Raleigh/Durham, and Winston-Salem. These submittals included revisions to Regulation .1002, Applicability; Regulation .1004, Emission Standards; Regulation .1005, Measurement and Enforcement. Regulation .1002 was adopted by the Environmental Management Commission, on May 12, 1994, and became effective on July 1, 1994. Regulation .1004 was adopted on May 14, 1993, and became effective June 1, 1993. These regulations changed the I/M program from a carbon monoxide program to an ozone/carbon monoxide program. Also, NCDEM expanded the I/M program coverage. EPA summarizes the requirements of the Federal I/M regulations as found in 40 CFR 51.350–51.373 and its analysis of the state submittal below. Parties desiring additional details on the Federal I/M regulation are referred to the November 5, 1992, **Federal Register** notice (57 FR 52950) or 40 CFR 51.350–51.373.

II. EPA's Analysis of the North Carolina, Basic I/M Program

As discussed above, section 182(a)(2)(B) of the Act requires that states adopt and implement updated regulations for I/M programs in moderate and above ozone nonattainment areas. The following sections of this notice summarize the requirements of the Federal I/M regulations and address whether the elements of the State's submittal comply with the Federal rule.

Applicability—40 CFR 51.350

Section 182(b)(4) of the Act and 40 CFR 51.350(a)(4) require that any area classified as moderate ozone nonattainment and not required to implement enhanced I/M under 40 CFR 51.350(a)(1) shall implement basic I/M in the 1990 Census-defined urbanized nonattainment area. The urbanized portion of the Charlotte nonattainment area includes sections of Mecklenburg, Gaston, Cabarrus, and Union Counties. The urbanized portion of Winston-Salem includes sections of Guilford and Forsyth Counties. The urbanized portion of Raleigh/Durham includes sections of Wake, Durham, and Orange Counties. The population distribution of these counties is such that the program exceeds the minimum required I/M coverage area. The North Carolina submittal contains the legal authority and regulations necessary for the NCDEM to establish the program boundaries and operate a basic I/M program. The program boundaries described in the North Carolina submittal meet the Federal I/M requirements under § 51.350 and are approvable.

The Federal I/M regulation requires that state programs shall not lapse prior to the time they are no longer needed. EPA beleives that a program that does not lapse prior to the attainment deadline for each applicable area would meet this requirement. The attainment date for the Charlotte ozone nonattainment area is November 15, 1996, and the North Carolina I/M regulation contained in the North Carolina submittal does not establish an

I/M program sunset date. This section is approvable.

Basic I/M Performance Standard—40 CFR 51.352

The basic I/M program must be designed and implemented to meet or exceed a minimum performance standard, which is expressed as emission levels in area-wide average grams per mile (gpm) for certain pollutants. The performance standard shall be established using local characteristics, such as vehicle mix and local fuel controls, and the following model I/M program parameters: network type, start date, test frequency, model year coverage, vehicle type coverage, exhaust emission test type, emission standards, emission control device, evaporative system function checks, stringency, waiver rate, compliance rate and evaluation date. The emission levels achieved by the state's program design shall be calculated using the most current version, at the time of submittal, of the EPA mobile source emission factor model. At the time of the North Carolina submittal the most current version was MOBILE5a. Areas shall meet or exceed the performance standard for the pollutants which cause them to be subject to basic I/M requirements. In the case of ozone nonattainment areas, the performance standard must be met for both nitrogen oxides (NO_X) and volatile organic compounds (VOCs).

The North Carolina submittal includes the following program design parameters:

Network type—decentralized, test and repair
Start date—1991
Test frequency—annual
Model year coverage—1975 and later
Vehicle type coverage—light and heavy duty gasoline powered vehicles
Emission test—Idle
Emission standards—1.2 percent CO, 220 ppm HC
Emission control device—Catalytic converter, air injection system, PCV valve, unleaded gas restrictor, EGR, thermostatic air control, fuel evaporation control, and oxygen sensor.
Stringency (pre-1981 failure rate)—20 percent
Waiver rate (pre-81/81 and newer)—5 percent
Compliance rate—95 percent
Evaluation date(s)—January 1, 1997.

The North Carolina program design parameters meet the Federal I/M regulations and are approvable.

The emission levels achieved by the State, for each area, were modeled using MOBILE5a. The modeling demonstration was performed correctly, used local characteristics and demonstrated that the program design will exceed the minimum basic I/M performance standard, expressed in gpm, for VOCs and NO_X for each milestone and for the attainment deadline. The modeling demonstration is approvable.

Network Type and Program Evaluation—40 CFR 51.353

Basic I/M programs can be operated in a centralized test-only format, in a decentralized test and repair, or in any hybrid version as long as states can demonstrate that the selected program is effective in achieving the basic I/M performance standard. The NCDEM will administer a decentralized test and repair I/M program in the areas of Raleigh/Durham, Winston-Salem, and Charlotte. The enhanced program evaluation requirements of this section do not pertain to these areas as it is a basic I/M program. The network type is approvable.

Adequate Tools and Resources—40 CFR 51.354

The Federal regulation requires states to demonstrate that adequate funding of the program is available. A portion of the test fee or separately assessed per vehicle fee shall be collected, placed in a dedicated fund and used to finance the program. Alternative funding approaches are acceptable if demonstrated that the funding can be maintained. Reliance on funding from a state or local General Fund is not acceptable unless doing otherwise would be a violation of the state's constitution. The SIP shall include a detailed budget plan which describes the source of funds for personnel, program administration, program enforcement, and purchase of equipment. The SIP shall also detail the number of personnel dedicated to the quality assurance program, data analysis, program administration, enforcement, public education and assistance and other necessary functions.

The North Carolina program is funded by a portion of the inspection fee that is dedicated to the program, and is divided among North Carolina Department of Motor Vehicles (NCDMV) and NCDEM. The NCDEM portion of the vehicle inspection fee is credited to the I/M Air Pollution Control Account. The NCDMV uses their portion to fund the enforcement part of the program. A detailed budget is included in the SIP for both groups. The submittal demonstrates that sufficient funds, equipment and personnel have been appropriated to meet program operation requirements. The State's submittal meets the adequate tools and resources requirements set forth in the Federal I/M regulations.

Test Frequency and Convenience—40 CFR 51.355

The SIP shall describe the test year selection scheme, how the test frequency is integrated into the enforcement process and shall include the legal authority, regulations or contract provisions to implement and enforce the test frequency. The program shall be designed to provide convenient service to the motorist by ensuring short wait times, short driving distances and regular testing hours.

The North Carolina I/M regulation provides for an annual test frequency for all covered vehicles. A vehicle is assigned a test month. An emission sticker is placed on the vehicle's windshield, reminding the owner of the testing date. Vehicles not in compliance can be fined by the state police or NCDMV. In addition, the NCDMV is establishing a computer matching system in order to identify vehicles that are late in getting an emission test. Owner's identified through computer matching with more than four months of non-compliance will be fined $100 if the vehicle is a pre-81, $250 if it is a 1981 or newer vehicle, and the registration may be revoked. This section is approvable.

Vehicle Coverage—40 CFR 51.356

The performance standard for basic I/M programs assumes coverage of all 1968 and later model year light duty vehicles (LDV) and light duty trucks (LDT) up to 8,500 pounds gross vehicle weight rating (GVWR), and includes vehicles operating on all fuel types. Other levels of coverage may be approved if the necessary emission reductions are achieved. Fleets may be officially inspected outside of the normal I/M program test facilities, if such alternatives are approved by the program administration, but shall be subject to the same test requirements using the same quality control standards as non-fleet vehicles and shall be inspected in independent, test-only facilities, according to the requirements of 40 CFR 51.353(a). Vehicles which are operated on Federal installations located within an I/M program area shall be tested, regardless of whether the vehicles are registered in the state or local I/M area.

The Federal I/M regulation requires that the SIP shall include the legal authority or rule necessary to

implement and enforce the vehicle coverage requirement, a detailed description of the number and types of vehicles to be covered by the program and a plan for how those vehicles are to be identified including vehicles that are routinely operated in the area but may not be registered in the area, and a description of any special exemptions including the percentage and number of vehicles to be impacted by the exemption.

The North Carolina I/M regulation require all 1975 and later model year gasoline powered vehicles up to 8,500 pounds gross vehicle weight registered in the I/M area to take an emission test. Non-gasoline powered vehicles, motorcycles, current model year vehicles, and vehicles of 1974 model year and older are exempted from this rule. Vehicles older than 1968 are required to undergo a tampering check as part of the state-wide safety inspection required on all vehicles. NCDMV will use a computer matching procedure in order to identify vehicles that should undergo testing. Fleet vehicles are subject to the program if registered in or primarily operated in a designated I/M county. Fleet owners are allowed to self-inspect their vehicles. Federally owned vehicles and vehicles operating in a federal installation located in an I/M county are subject to the testing requirements. The North Carolina's plan for testing fleet vehicles is acceptable and meets the requirements of the Federal I/M regulation.

Test Procedures and Standards—40 CFR 51.357

Written test procedures and pass/fail standards shall be established and followed for each model year and vehicle type included in the program. Test procedures and standards are detailed in 40 CFR 51.357 and in the EPA document entitled ''Recommended I/M Short Test Procedures For the 1990's: Six Alternatives.''

The State's I/M submittal includes a description of the test procedures used in the North Carolina I/M program. These test procedures conform to EPA approved test procedures and are approvable. The North Carolina I/M regulation establishes hydrocarbon (HC) and carbon monoxide (CO) pass/fail exhaust standards for all test procedures for each applicable model year and vehicle type. The exhaust standards and test methods adopted by the State conform to EPA established standards and are approvable.

Test Equipment—40 CFR 51.358

Computerized test systems are required for performing any measurement on subject vehicles. The Federal I/M regulation requires that state SIP submittals include written technical specifications for all test equipment used in the program. The specifications shall describe the emission analysis process, the necessary test equipment, the required features, and written acceptance testing criteria and procedures.

Appendix G of the North Carolina SIP establishes the type of exhaust analyzers that meet the BAR90 performance specifications. These specifications require the use of computerized test systems. The specifications also include performance features and functional characteristics of the computerized test systems. This section is approvable.

Quality Control—40 CFR 51.359

Quality control measures shall insure that emission measurement equipment is calibrated and maintained properly, and that inspection, calibration records, and control charts are accurately created, recorded and maintained.

Appendix G provides the calibration procedures and system checks that must be conducted by the inspection station. The SIP also contains the quality control requirements for the emission measurement equipment, record keeping requirements and measures to maintain the security of all documents used to establish compliance with the inspection requirements. A special software encryption algorithm codes the ''Inspection Number'' field on the test form and can not be duplicated without access to the source code. Under a Memorandum of Understanding between NCDMV and NCDEM, NCDMV is in charge of overt and covert audits of the inspection stations, and inspectors. NCDEM, in turn, quality assures NCDMV's enforcement program. This portion of the North Carolina submittal complies with the quality control requirements set forth in the Federal I/M regulation and is approvable.

Waivers and Compliance Via Diagnostic Inspection—40 CFR 51.360

The Federal I/M regulation allows for the issuance of a waiver, which is a form of compliance with the program requirements that allows a motorist to comply without meeting the applicable test standards. For basic I/M programs, an expenditure of at least $75 for pre-81 vehicles and $200 for 1981 and later vehicles in repairs, is required in order to qualify for a waiver. Waivers can only be issued after a vehicle has failed a retest performed after all qualifying repairs have been made. Any available warranty coverage must be used to obtain repairs before expenditures can be counted toward the cost limit. Tampering related repairs shall not be applied toward the cost limit. Repairs must be appropriate to the cause of the test failure. Repairs for 1980 and newer model year vehicles must be performed by a recognized repair technician. The Federal regulation allows for compliance via a diagnostic inspection after failing a retest on emissions and requires quality control of waiver issuance. The SIP must set a maximum waiver rate and must describe corrective action that would be taken if the waiver rate exceeds that contained in the SIP.

North Carolina is commited to a waiver rate of 5%. In case the waiver rate exceeds this percentage, the State will take corrective actions to lower the rate. North Carolina issues only repair waivers. North Carolina's Regulation 20–183.5 sets a $75 cost limit for pre-81 vehicles and $200 for 1981 and newer vehicles. The regulation includes provisions which address waiver criteria and procedures, including cost limits, tampering and warranty related repairs, quality control and administration. Any vehicle owner requesting a waiver must submit the vehicle for review at a NCDMV office. A vehicle repair form must be submitted by the owner at that time, verifying the repairs. This section is approvable.

Motorist Compliance Enforcement—40 CFR 51.361

The Federal regulation requires that compliance shall be ensured through the denial of motor vehicle registration in I/M programs. However, a basic area may use an alternative enforcement mechanism if it demonstrates that the alternative will be as effective as registration denial. The SIP shall provide information concerning the enforcement process, legal authority to implement and enforce the program, a commitment to a compliance rate to be used for modeling purposes and to be maintained in practice.

The NCDMV uses a sticker-enforcement system. The SIP contains a detailed description of the enforcement process. Any owner failing to obtain a certificate of compliance by the end of the assigned month will be subject to a penalty. If caught without a valid sticker, the vehicle owner will be given a $50.00 ticket. Also, NCDMV is in process of establishing a computer-matching system. The system will identify owners that are a month late in renewing their sticker, and the owner

will be notified by letter. If a second letter is sent out and the owner doesn't inspect the vehicle, a $100 penalty is assessed on a pre-1981 vehicle or a $250 penalty is assessed for a 1981 or newer vehicle. After four months of noncompliance, DMV will revoke the vehicle's registration. NCDMV and NCDEM will change the enforcement system to registration denial by October 1, 1996. North Carolina commits to a 95% compliance rate, and this number was used in their modeling demonstration. This portion of the North Carolina submittal meets the Federal requirements and is approvable.

Motorist Compliance Enforcement Program Oversight—40 CFR 51.362

The Federal I/M regulation requires that the enforcement program shall be audited regularly and shall follow effective program management practices, including adjustments to improve operation when necessary. The SIP shall include quality control and quality assurance procedures to be used to insure the effective overall performance of the enforcement system. An information management system shall be established which will characterize, evaluate and enforce the program.

The North Carolina program will be audited every quarter by NCDEM. These audits will insure that NCDMV is performing the enforcement portion of the I/M program at an acceptable level. NC has established a database system that tracks NCDMV's enforcement record, and the number of vehicles tested. This section is approvable.

Quality Assurance—40 CFR 51.363

An ongoing quality assurance program shall be implemented to discover, correct and prevent fraud, waste, and abuse in the program. The program shall include covert and overt performance audits of the inspectors, audits of station and inspector records, equipment audits, and formal training of all state I/M enforcement officials and auditors. A description of the quality assurance program which includes written procedure manuals on the above discussed items must be submitted as part of the SIP.

The North Carolina submittal includes a quality assurance program which describes details and procedures for auditing inspectors, station records, and equipment. NCDMV has developed a performance audit program. NCDMV's inspectors will perform inspections of testing station inspectors and testing equipment. These include overt and covert audits and remote observation of inspection personnel performing testing. Covert audits are required to use a range of vehicles which have been set to fail the inspection test. NCDEM will evaluate NCDMV performance, and is in charge of developing all manuals and program specifications. NCDEM's and NCDMV's quality assurance programs meets the Federal I/M regulation requirements and are approvable.

Enforcement Against Contractors, Stations and Inspectors—40 CFR 51.364

Enforcement against licensed stations or contractors, and inspectors shall include swift, sure, effective, and consistent penalties for violation of program requirements. The Federal I/M regulation requires the establishment of minimum penalties for violations of program rules and procedures which can be imposed against stations, contractors and inspectors. The legal authority for establishing and imposing penalties, civil fines, license suspensions and revocations must be included in the SIP. State quality assurance officials shall have the authority to temporarily suspend station and/or inspector licenses immediately upon finding a violation that directly affects emission reduction benefits. An official opinion explaining any state constitutional impediments to immediate suspension authority must be included in the submittal. The SIP shall describe the administrative and judicial procedures and responsibilities relevant to the enforcement process, including which agencies, courts and jurisdictions are involved, who will prosecute and adjudicate cases and the resources and sources of those resources which will support this function.

The North Carolina submittal includes the legal authority to establish and impose penalties against stations, contractors and inspectors. The North Carolina enforcement program is staffed by NCDMV officers and immediate action and prosecution is taken when needed. NCDMV officers have the authority to shut down analayzers that are not working properly, and can issue citations against inspectors and testing facilities. A penalty schedule is included in the submittal. The North Carolina I/M program meets the requirements of this section and is approvable.

Data Collection—40 CFR 51.365

Accurate data collection is essential to the management, evaluation and enforcement of an I/M program. The Federal I/M regulation requires data to be gathered on each individual test conducted and on the results of the quality control checks of test equipment required under 40 CFR 51.359.

Appendix G specifies the information contained on the inspection form. Appendix G requires the collection of data, and subsequent analysis, on each individual test conducted and describes the type of data to be collected. The type of test data collected meets the Federal I/M regulation requirements and is approvable. The submittal also commits to gather and report the results of the quality control checks required under 40 CFR 51.359 and is approvable.

Data Analysis and Reporting—40 CFR 51.366

Data analysis and reporting are required to allow for monitoring and evaluation of the program by the states and EPA. The Federal I/M regulation requires annual reports to be submitted which provide information and statistics and summarize activities performed for each of the following programs: testing, quality assurance, quality control and enforcement. These reports will be submitted quarterly.

The North Carolina I/M program provides for the analysis and reporting of data for the testing program, quality assurance program, quality control program and the enforcement program. The type of data to be analyzed and reported meets the Federal I/M regulation requirements and is approvable. North Carolina commits to submit quarterly reports on these programs to EPA. This section is approvable.

Inspector Training and Licensing or Certification—40 CFR 51.367

The Federal I/M regulation requires all inspectors to be formally trained and licensed or certified to perform inspections. The North Carolina I/M regulation requires all inspectors to receive formal training, be certified, and renew the certification every four years. The inspector must attend a training course and pass an examination with at least a score of 80%. The SIP meets the Federal I/M regulation requirements for inspector training and certification and is approvable.

Public Information and Consumer Protection—40 CFR 51.368

The Federal I/M regulation requires the SIP to include a public information and consumer protection program. NCDMV will operate a toll free number which provides information concerning the I/M program, and warranty information. This number must be posted in all testing stations and visible to the customer. Also, NCDEM and NCDMV developed a brochure that contains general program information, car care tips and information concerning

emissions warranty. The public information and consumer protection programs contained in the SIP submittal meet the Federal regulations and are approvable.

Improving Repair Effectiveness—40 CFR 51.369

Effective repairs are the key to achieving program goals. The Federal regulation requires states to take steps to ensure that the capability exists in the repair industry to repair vehicles. The SIP must include a description of the technical assistance program to be implemented, a description of the procedures and criteria to be used in meeting the performance monitoring requirements required in the Federal regulation and a description of the repair technician training resources available in the community.

The North Carolina I/M program provides for a mechanics ''help line'' regarding vehicle repair. The ''help line'' is intended to provide service in three areas: providing emissions repair technical assistance, assist in locating replacement parts for emissions devices, and to answer questions related to the legality of engine-switching and changes to exhaust system configurations. Also, various technical colleges in the State offer emission controls training. The repair effectiveness program described in the SIP meets the Federal regulation and is approvable.

Compliance with Recall Notices—40 CFR 51.370

The Federal regulation requires the states to establish methods to ensure that vehicles that are subject to enhanced I/M and are included in an emission related recall receive the required repairs prior to completing the emission test or renewing the vehicle registration.

The North Carolina's nonattainment areas are classified as moderate and therefore not subject to this provision.

On-road Testing—40 CFR 51.371

On-road testing is required in enhanced I/M areas. The use of either remote sensing devices (RSD) or roadside pullovers including tailpipe emission testing can be used to meet the Federal regulations. The program must include on-road testing of 0.5% of the subject fleet or 20,000 vehicles, whichever is less, in the nonattainment area or the I/M program area. Motorists that have passed an emission test and are found to be high emitters as a result of a on-road test shall be required to pass an out-of-cycle test.

Even though North Carolina's nonattainment areas are classified as moderate and therefore not subject to this provision, NCDEM has purchased a RSD and will conduct surveys with it.

State Implementation Plan Submissions/Implementation Deadlines—40 CFR 51.372–373

The Federal regulation requires decentralized basic I/M programs to be fully implemented by January 1, 1994. The North Carolina I/M program has been in operation since 1983 as a carbon monoxide program. Starting in 1991, the I/M program started failing vehicles for the hydrocarbon standard. The changes required by the CAA as amended in 1990 were phased in the I/M program areas between 1991–1993. The SIP meets the SIP submission and implementation deadline requirements set forth in the Federal I/M regulation.

EPA's review of the material indicates that the State has adopted a basic I/M program in accordance with the requirements of the Act. EPA is approving the North Carolina SIP revision for all basic I/M programs in North Carolina, which were submitted on August 5, 1994, July 19, 1993, January 17, 1992, and September 24, 1992.

Final Action

The EPA is publishing this action without prior proposal because the agency views this as a noncontroversial amendment and anticipates no adverse public comments. However, in a separate document in this **Federal Register** publication, the EPA is proposing to approve the SIP revision should adverse or critical comments be filed. This action will be effective on August 1, 1995 unless, within 30 days of its publication, adverse or critical comments are received.

If EPA receives such comments, this action will be withdrawn before the effective date by publishing a subsequent document that will withdraw the final action. All public comments received will then be discussed in a subsequent final rule based on the separate proposed rule. The EPA will not institute a second comment period for this action. Any parties interested in commenting on this action should do so at this time. If no such comments are received, the public is advised that this action will be effective on August 1, 1995.

EPA is approving this revision to the North Carolina SIP for a basic I/M program. The Agency has reviewed this request for revision of the Federally-approved SIP for conformance with the provisions of the 1990 Amendments enacted on November 15, 1990. The Agency has determined that this action conforms with those requirements.

Under section 307(b)(1) of the Act, 42 U.S.C. 7607 (b)(1), petitions for judicial review of this action must be filed in the United States Court of Appeals for the appropriate circuit by August 1, 1995. Filing a petition for reconsideration by the Administrator of this final rule does not affect the finality of this rule for purposes of judicial review nor does it extend the time within which a petition for judicial review may be filed, and shall not postpone the effectiveness of such rule or action. This action may not be challenged later in proceedings to enforce its requirements. (See section 307(b)(2) of the Act, 42 U.S.C. 7607 (b)(2).)

The Office of Management and Budget has exempted this rule from the requirements of section 6 of Executive Order 12866.

Nothing in this action shall be construed as permitting or allowing or establishing a precedent for any future request for a revision to any state implementation plan. Each request for revision to the state implementation plan shall be considered separately in light of specific technical, economic, and environmental factors and in relation to relevant statutory and regulatory requirements.

Under the Regulatory Flexibility Act, 5 U.S.C. 600 *et seq.*, EPA must prepare a regulatory flexibility analysis assessing the impact of any proposed or final rule on small entities. 5 U.S.C. 603 and 604. Alternatively, EPA may certify that the rule will not have a significant impact on a substantial number of small entities. Small entities include small businesses, small not-for-profit enterprises, and government entities with jurisdiction over populations of less than 50,000.

SIP approvals under 110 and subchapter I, Part D of the CAA do not create any new requirements, but simply approve requirements that the State is already imposing. Therefore, because the Federal SIP approval does not impose any new requirements, I certify that it does not have a significant impact on any small entities affected. Moreover, due to the nature of the Federal-state relationship under the CAA, preparation of a regulatory flexibility analysis would constitute Federal inquiry into the economic reasonableness of state action. The CAA forbids EPA to base its actions concerning SIPs on such grounds. *Union Electric Co.* v. *U.S. E.P.A.*, 427 U.S. 246, 256–66 (S.Ct. 1976); 42 U.S.C. 7410(a)(2) and 7410(k)(3).

Unfunded Mandates

Under Sections 202, 203, and 205 of the Unfunded Mandates Reform Act of 1995 (''Unfunded Mandates Act''), signed into law on March 22, 1995, EPA must undertake various actions in association with proposed or final rules that include a Federal mandate that may result in estimated costs of $100 million or more to the private sector, or to State, or tribal governments in the aggregate.

EPA's final action does not impose any federal intergovernmental mandate, as defined in section 101 of the Unfunded Mandates Act, upon the State. To the extent that the rules being approved by this action will impose any mandate upon the State, local, or tribal governments, or upon the private sector, EPA's action will impose no new requirements; such sources are already subject to these regulations under State law. Accordingly, no additional costs to State, local, or tribal governments, or to the private sector, result from this action. For these reasons, EPA has determined that this final action does not include a mandate that may result in estimated costs of $100 million or more to either State, local, or tribal governments in the aggregate, or to the private sector.

List of Subjects in 40 CFR Part 52

Environmental protection, Air pollution control, Carbon monoxide, Hydrocarbons, Incorporation by reference, Intergovernmental relations, Nitrogen oxides, Ozone, Reporting and Recordkeeping requirements.

Dated: May 3, 1995.

Patrick M. Tobin,

Acting Regional Administrator.

Part 52 of chapter I, title 40, Code of Federal Regulations, is amended as follows:

PART 52—[AMENDED]

1. The authority citation for part 52 continues to read as follows:

Authority: 42.U.S.C. 7401–7671q.

Subpart S—North Carolina

2. Section 52.1770, is amended by adding paragraph (c)(80) to read as follows:

§ 52.1770 Identification of plan.

* * * * *

(c) * * *

(80) Modifications to the existing basic I/M program in North Carolina submitted on July 19, 1993, January 17, 1992, and September 24, 1992. Addition of regulations .1001 through .1005 establishes the I/M program.

(i) Incorporation by reference.

(A) Regulation .1001 and .1003, effective on December 1, 1982.

(B) Regulation .1002 effective on July 1, 1994.

(C) Regulation .1004 effective on July 1, 1993.

(D) Regulation .1005 effective on April 1, 1991.

(E) Specification for the North Carolina Analyzer System adopted December 12, 1991.

(ii) Other material. None.

[FR Doc. 95–13462 Filed 6–1–95; 8:45 am]

BILLING CODE 6560–50–P

---

40 CFR Part 52

[WA22–1–6362; FRL–5214–2]

Approval and Promulgation of State Implementation Plans: Washington Approval of Section 112(l) Authority; Operating Permits; Washington

AGENCY: Environmental Protection Agency.

ACTION: Final rule.

SUMMARY: The Environmental Protection Agency (EPA) is approving in part and disapproving in part, numerous revisions to the State of Washington Implementation Plan submitted to EPA by the Director of the Washington Department of Ecology (WDOE) on March 8, 1994. The revisions were submitted in accordance with the requirements of section 110 and part D of the Clean Air Act (hereinafter the Act). EPA is taking no action on a number of provisions which are unrelated to the purposes of the implementation plan. EPA is also approving certain WDOE rules under the authority of section 112(l) of the Act in order to recognize conditions and limitations established pursuant to these rules as Federally enforceable.

EFFECTIVE DATE: This action will be effective on June 2, 1995.

ADDRESSES: Copies of the State's request and other information supporting today's action are available for inspection during normal business hours at the following locations: EPA, Air & Radiation Branch (AT–082), 1200 Sixth Avenue, Seattle, Washington 98101, and State of Washington, Department of Ecology, 4550 Third Avenue SE, Lacey, Washington 98504

Documents which are incorporated by reference are available for public inspection at the Air and Radiation Docket and Information Center, EPA, 401 M Street, SW, Washington, D.C. 20460, as well as the above addresses.

FOR FURTHER INFORMATION CONTACT: David C. Bray, Permit Programs Manager, EPA, Air & Radiation Branch (AT–082), Seattle, Washington 98101, (206) 553–4253.

SUPPLEMENTARY INFORMATION:

I. Background

The Washington Department of Ecology (WDOE) amended its Part D NSR rules on August 20, 1993 and submitted them to EPA on March 8, 1994 as a revision to the Washington SIP. The WDOE also amended several other provisions of its current rules for air pollution sources and submitted them to EPA on March 8, 1994 as a revision to the Washington SIP. On September 29, 1994, the Director of the WDOE submitted an official application to obtain approval for Title V permitting authorities (with the exception of the Puget Sound Air Pollution Control Agency (PSAPCA) and the Southwest Air Pollution Control Agency (SWAPCA)) in the State of Washington to implement and enforce the statewide rules for ''Controls for New Sources of Toxic Air Pollutants'' (WAC 173–460) as an interim program to implement section 112(g) of the Act. The Director of the WDOE also submitted an official application on behalf of the PSAPCA and SWAPCA to obtain approval for those local agencies to implement and enforce their own rules (portions of PSAPCA Regulations I and III and SWAPCA Regulation 460) for new sources of toxic air pollutants as interim programs to implement section 112(g) of the Act.

On February 22, 1995 (60 FR 9802), EPA proposed to approve in part and disapprove in part, numerous revisions to the State of Washington Implementation Plan. EPA proposed to take no action on a number of provisions which are unrelated to the purposes of the implementation plan. EPA also proposed to approve certain WDOE rules, and certain rules of the Puget Sound Air Pollution Control Agency (PSAPCA) and Southwest Air Pollution Control Authority (SWAPCA), under the authority of section 112(l) of the Act, in order to recognize conditions and limitations established pursuant to these rules as Federally enforceable.

On May 8, 1995, WDOE officially withdrew its request for approval of the State and local agency rules submitted September 29, 1994 as an interim program for implementing section 112(g) of the Act. WDOE also withdrew two provisions of WAC 173–400 which were included in its March 8, 1994 SIP submittal.

II. Response to Comments

EPA received comments from Northwest Pulp & Paper Association, the American Forest & Paper Association, and the Washington Department of Ecology. With the exception of two comments from the WDOE supporting EPA's proposed approval of WAC 173–400–091, all of the comments pertained to rules which the WDOE has since withdrawn from its SIP and Section 112(l) submittal. Because the rules on which the adverse comments were submitted are no longer before EPA for consideration, the adverse comments are now moot.

III. This Action

On February 22, 1995 (60 FR 9802), EPA proposed to approve in part, disapprove in part, and take no action in part, on numerous revisions to Chapter 173–400 WAC ''General Regulations for Air Pollution Sources.'' With the exception of the two provisions which were withdrawn by WDOE on May 8, 1995, EPA today is taking final action on the proposed approvals and disapprovals.

Specifically, EPA is approving revisions to WAC 173–400–030 ''Definitions;'' WAC 173–400–040 ''General standards for maximum emissions'' (except for –040(1)(c) and (d); –040(2); –040(4); and the second paragraph of –040(6)); WAC 173–400–100 ''Registration;'' WAC 173–400–105 ''Records, monitoring, and reporting;'' WAC 173–400–110 ''New source review (NSR);'' WAC 173–400–171 ''Public involvement;'' WAC 173–400–230 ''Regulatory actions;'' and WAC 173–400–250 ''Appeals;'' and the addition of WAC 173–400–081 ''Startup and shutdown;'' WAC 173–400–091 ''Voluntary limits on emissions;'' WAC 173–400–107 ''Excess emissions;'' WAC 173–400–112 ''Requirements for new sources in nonattainment areas'' (except for –112(8)); and WAC 173–400–113 ''Requirements for new sources in attainment or unclassifiable areas'' (except for –113(5)).

EPA is disapproving WAC 173–400–040(1)(c) ''alternative time periods for opacity standards;'' WAC 173–400–040(1)(d) ''alternative opacity limits;'' the second paragraph of WAC 173–400–040(6) ''exemption from sulfur dioxide emission limit;'' the exception provision in WAC 173–400–050(3) ''alternative oxygen correction factor;'' WAC 173–400–120 ''Bubble rules;'' WAC 173–400–131 ''Issuance of emission reduction credits;'' WAC 173–400–136 ''Use of emission reduction credits;'' WAC 173–400–141 ''Prevention of significant deterioration (PSD);'' and WAC 173–400–180 ''Variance.''

EPA is taking no action on WAC 173–400–040(2) ''Fallout;'' WAC 173–400–040(4) ''Odors;'' WAC 173–400–070(7) ''Sulfuric acid plants;'' WAC 173–400–075 ''Emission standards for sources emitting hazardous air pollutants;'' and WAC 173–400–115 ''Standards of performance for new sources.'' Note that WAC 173–400–112(8), WAC 173–400–113(5), and WAC 173–400–114 were not submitted for inclusion in the Washington SIP. All other provisions of WAC 173–400 which are not mentioned above were previously approved by EPA on January 15, 1993 (58 FR 4578). See the February 22, 1995 **Federal Register** for a complete discussion of EPA's findings and rationale for its proposed approvals and disapprovals.

As was proposed in the February 22, 1995 **Federal Register**, after final EPA approval of WAC 173–400–091, ''regulatory orders'' issued pursuant to that rule, and terms and conditions contained therein, will be enforceable by the EPA and by citizens under section 304 of the Act regardless of whether such orders were issued prior to EPA approval of that section. However, such orders would have to have been issued after the effective date of WAC 173–400–091 (i.e., September 20, 1993) in accordance with all of the provisions set forth in that section. Sources could, after the effective date of this approval, rely on ''regulatory orders'' issued pursuant to WAC 173–400–091 as a means to limit their potential to emit criteria pollutants, pollutants regulated under the PSD provisions of the SIP, and hazardous air pollutants listed in section 112(b) of the Act in order to avoid requirements which would otherwise apply to ''major stationary sources.''

After the effective date of this approval, regulatory orders issued pursuant to WAC 173–400–091 will become part of the Washington SIP upon issuance by a permitting authority without further action by EPA. However, Section 110(h) requires EPA to assemble, maintain, and periodically publish each SIP. Furthermore, 40 CFR 51.104(e) and 51.326 require a State to submit to EPA all revisions to its SIP. Therefore, each regulatory issued pursuant to WAC 173–400–091 must be submitted to EPA for inclusion in the assembled SIP. While section 51.326 allows the submittal of such SIP revisions to occur on an annual basis, EPA strongly encourages permitting authorities to submit such revisions on a more routine basis (e.g., within 30 days of issuance) so that EPA and the public are aware of the major source status and current SIP provisions for affected sources.

IV. Effective Date

Pursuant to Section 553(d)(3) of the Administrative Procedures Act (APA), this final notice is effective June 2, 1995. Section 553(d)(3) of the APA allows EPA to waive the requirement that a rule be published 30 days before the effective date if EPA determines there is ''good cause'' and publishes the grounds for such a finding with the rule. Under section 553(d)(3), EPA must balance the necessity for immediate federal enforceability of these SIP revisions against principles of fundamental fairness which require that all affected persons be afforded a reasonable time to prepare for the effective date of a new rule. *United States* v. *Gavrilovic*, 551 F 2d 1099, 1105 (8th Cir., 1977). The purpose of the requirement for a rule to be published 30 days before the effective date of the rule is to give all affected persons a reasonable time to prepare for the effective date of a new rule. *Id*.

EPA has determined good cause exists to make this **Federal Register** notice effective upon publication. The rules made federally enforceable by this **Federal Register** notice have been enforceable as a matter of state law for more than a year. Moreover, the 30 day publication period would cause undue burdens to the public, affected industry and permitting authorities. Under Washington's Title V program, Title V sources must submit Title V applications by June 7, 1995. *See* WAC 173–401–500(3)(a). Many existing major stationary sources in Washington have applied for or have already received regulatory orders under WAC 173–400–091 to limit their potential to emit to less than the major source thresholds and are relying in good faith on these regulatory orders to exempt them from the requirements of the Title V operating permits program. If the federal enforceability of these SIP revisions is delayed for 30 days, these sources would be in violation of the requirement to submit Title V applications by June 7, 1995, solely because the regulatory orders that they have already been issued were not yet federally enforceable. The imposition of the 30 day delay in the effective date of these SIP revisions would therefore require sources to prepare and submit Title V applications that would not be required once this approval becomes effective in 30 days, require state and local permitting authorities to expend unnecessary resources for receiving, logging in and reviewing permit applications and possible enforcement

action for late submittals, and delay the federal enforceability of the voluntary emission reductions made by these sources.

Therefore, EPA has determined that good cause exists to make these SIP revisions immediately effective and that the principals of fundamental fairness are met because all known affected persons have been afforded a reasonable time to prepare for the effective date of these SIP revisions. Accordingly, pursuant to section 553(d)(3) of the APA, this approval of the Washington SIP is finally effective upon publication in the **Federal Register**.

V. Summary of Action

In summary, EPA is approving: WAC 173–400 as in effect on September 20, 1993, except for the following sections: –040(1)(c) and (d); –040(2); –040(4); the second paragraph of –040(6); the exception provision in –050(3); –070(7); –075; –112(8); –113(5); –114; –115; –120; –131; –136; –141; and –180.

EPA is disapproving: WAC 173–400–040(1)(c) and (d), the second paragraph of –040(6), the exception provision in –050(3), –120, –131, –136, –141, and –180.

EPA is taking no action on: WAC 173–400–040(2), –040(4), –070(7), –075, and –115. Note that WAC 173–400–112(8), WAC 173–400–113(5), and WAC 173–400–114 have not been submitted for inclusion in the Washington SIP.

EPA is also approving pursuant to the authority of section 112(l) of the Act: WAC 173–400–091 as in effect on September 20, 1993.

Administrative Review

This action has been classified as a Table 3 action by the Regional Administrator under the procedures published in the **Federal Register** on January 19, 1989 (54 FR 2214–2225), as revised by an October 4, 1993 memorandum from Michael H. Shapiro, Acting Assistant Administrator for Air and Radiation. The OMB has exempted this regulatory action from E.O. 12866 review.

EPA's disapproval of the State request under section 110 and subchapter I, Part D of the CAA does not affect any existing requirements applicable to small entities. Any pre-existing Federal requirements remain in place after this disapproval. Federal disapproval of the State submittal does not affect its State enforceability. Moreover, EPA's disapproval of the submittal does not impose any new Federal requirements. Therefore, EPA certifies that this disapproval action does not have a significant impact on a substantial number of small entities because it does not impose any new Federal requirements.

Nothing in this action should be construed as permitting or allowing or establishing a precedent for any future request for revision to any SIP. Each request for revision to the SIP shall be considered separately in light of specific technical, economic and environmental factors and in relation to relevant statutory and regulatory requirements.

Under Section 202 of the Unfunded Mandates Reform Act of 1995 (''Unfunded Mandates Act''), signed into law on March 22, 1995, EPA must prepare a budgetary impact statement to accompany any proposed or final rule that includes a Federal mandate that may result in estimated costs to State, local, or tribal governments in the aggregate; or to the private sector, of $100 million or more. Under Section 205, EPA must select the most cost-effective and least burdensome alternative that achieves the objectives of the rule and is consistent with statutory requirements. Section 203 requires EPA to establish a plan for informing and advising any small governments that may be significantly or uniquely impacted by the rule.

EPA has determined that the approval action promulgated today does not include a Federal mandate that may result in estimated costs of $100 million or more to either State, local, or tribal governments in the aggregate, or to the private sector. This Federal action approves pre-existing requirements under State or local law, and imposes no new Federal requirements. Accordingly, no additional costs to State, local, or tribal governments, or to the private sector, result from this action.

Under section 307(b)(1) of the Clean Air Act, petitions for judicial review of this action must be filed in the United States Court of Appeals for the appropriate circuit by August 1, 1995. Filing a petition for reconsideration by the Administrator of this final rule does not affect the finality of this rule for the purposes of judicial review nor does it extend the time within which a petition for judicial review may be filed and shall not postpone the effectiveness of such rule or action. This action may not be challenged later in proceedings to enforce its requirements. (See section 307(b)(2), 42 U.S.C. 7607(b)(2).)

List of Subjects in 40 CFR Part 52

Environmental protection, Air pollution control, Carbon monoxide, Hydrocarbons, Incorporation by reference, Intergovernmental relations, Lead, Nitrogen dioxide, Ozone, Particulate matter, Reporting and recordkeeping requirements, Sulfur oxides, and Volatile organic compounds.

Dated: May 24, 1995.

Chuck Clarke,

Regional Administrator.

Note: Incorporation by reference of the Implementation Plan for the State of Washington was approved by the Director of the Office of Federal Register on July 1, 1982.

Part 52, chapter I, title 40 of the Code of Federal Regulations is amended as follows:

PART 52—[AMENDED]

1. The authority citation for Part 52 continues to read as follows:

Authority: 42 U.S.C. 7401–7671q.

Subpart WW—Washington

2. Section 52.2470 is amended by adding paragraph (c)(54) to read as follows:

§ 52.2470 Identification of plan.

* * * * *

(c) * * *

(54) On March 8, 1994, the Director of WDOE submitted to the Regional Administrator of EPA numerous revisions to the State of Washington Implementation Plan which included updated new source review regulations and provisions for voluntary limits on a source's potential to emit. The revisions were submitted in accordance with the requirements of section 110 and Part D of the Clean Air Act (hereinafter the Act).

(i) Incorporation by reference.

(A) March 8, 1994 and May 8, 1995 letters from WDOE to EPA submitting requests for revisions to the Washington SIP consisting of an amended state regulation; Chapter 173–400 Washington Administrative Code General Regulations for Air Pollution Sources, adopted on August 20, 1993, in its entirety with the exception of the following sections: –040(1)(c) and (d); –040(2); –040(4); the second paragraph of –040(6); the exception provision in –050(3); –070(7); –075; –112(8); –113(5); –114; –115; –120; –131; –136; –141; and –180.

3. Subpart WW is further amended by adding a new § 52.2495 to read as follows:

§ 52.2495 Voluntary limits on potential to emit

Terms and conditions of regulatory orders issued pursuant to WAC 173–400–091 ''Voluntary limits on emissions'' and in accordance with the provisions of WAC 173–400–091, WAC 173–400–105 ''Records, monitoring, and

reporting,'' and WAC 173–400–171 ''Public involvement,'' shall be applicable requirements of the federally-approved Washington SIP and Section 112(l) program for the purposes of section 113 of the Clean Air Act and shall be enforceable by EPA and by any person in the same manner as other requirements of the SIP and Section 112(l) program. Regulatory orders issued pursuant to WAC 173–400–091 are part of the Washington SIP and shall be submitted to EPA Region 10 in accordance with the requirements of §§ 51.104(e) and 51.326.

[FR Doc. 95–13516 Filed 6–1–95; 8:45 am]

BILLING CODE 6560–50–P

40 CFR Part 52

[MI42–01–7027a; FRL–5213–3]

Determination of Attainment of Ozone Standard by Grand Rapids and Muskegon, Michigan; Determination Regarding Applicability of Certain Reasonable Further Progress and Attainment Demonstration Requirements

AGENCY: United States Environmental Protection Agency (USEPA).

ACTION: Direct final rule.

SUMMARY: The USEPA is determining, through direct final procedure, that the Grand Rapids (Kent and Ottawa Counties) and Muskegon (Muskegon County) ozone nonattainment areas have attained the National Ambient Air Quality Standard (NAAQS) for ozone. This determination is based upon 3 years of complete, quality assured ambient air monitoring data for the years 1992–1994 that demonstrate that the ozone NAAQS has been attained in these areas. On the basis of this determination, USEPA is also determining that certain reasonable further progress and attainment demonstration requirements, along with certain other related requirements, of part D of Title 1 of the Clean Air Act are not applicable to the areas for so long as the areas continue to attain the ozone NAAQS. In the proposed rules section of this **Federal Register**, USEPA is proposing these determinations and soliciting public comment on them. If adverse comments are received on this direct final rule, USEPA will withdraw this final rule and address these comments in a subsequent final rule on the related proposed rule which is being published in the proposed rules section of this **Federal Register**. No additional opportunity for public comment will be provided. Unless this direct final rule is withdrawn no further rulemaking will occur on this action.

EFFECTIVE DATE: This action will be effective July 17, 1995 unless notice is received by July 3, 1995 that someone wishes to submit adverse comments. If the effective date is delayed, timely notice will be published in the **Federal Register**.

ADDRESSES: Written comments can be mailed to: Carlton T. Nash, Chief, Regulation Development Section, Air Toxics and Radiation Branch, (AT–18J), United States Environmental Protection Agency, 77 West Jackson Boulevard, Chicago, Illinois 60604.

A copy of the air quality data and USEPA's analysis are available for inspection at the following address: (It is recommended that you telephone Madelin Rucker at (312) 886–0661 before visiting the Region 5 office).

FOR FURTHER INFORMATION CONTACT: Madelin Rucker, Regulation Development Section, Air Toxics and Radiation Branch (AT–18J), United States Environmental Protection Agency, 77 West Jackson Boulevard, Chicago, Illinois 60604. Telephone: (312) 886–0661.

SUPPLEMENTARY INFORMATION:

I. Background

Subpart 2 of part D of Title I of the Clean Air Act (Act) contains various air quality planning and state implementation plan (SIP) submission requirements for ozone nonattainment areas. USEPA believes it is reasonable to interpret provisions regarding reasonable further progress (RFP) and attainment demonstrations, along with certain other related provisions, so as not to require SIP submissions if an ozone nonattainment area subject to those requirements is monitoring attainment of the ozone standard (i.e., attainment of the NAAQS demonstrated with three consecutive years of complete, quality assured air quality monitoring data). As described below, USEPA has previously interpreted the general provisions of subpart 1 of part D of Title I (sections 171 and 172) so as not to require the submission of SIP revisions concerning RFP, attainment demonstrations, or contingency measures. As explained in a memorandum dated May 10, 1995 from John Seitz to the Regional Air Division Directors, entitled ''Reasonable Further Progress, Attainment Demonstration, and Related Requirements for Ozone Nonattainment Areas Meeting the National Ambient Air Quality Standard,'' USEPA believes it is appropriate to interpret the more specific RFP, attainment demonstration and related provisions of subpart 2 in the same manner.

First, with respect to RFP, section 171(1) states that, for purposes of part D of Title I, RFP ''means such annual incremental reductions in emissions of the relevant air pollutant as are required by this part or may reasonably be required by the Administrator for the purpose of ensuring attainment of the applicable national ambient air quality standard by the applicable date.'' Thus, whether dealing with the general RFP requirement of section 172(c)(2), or the more specific RFP requirements of subpart 2 for classified ozone nonattainment areas (such as the 15 percent plan requirement of section 182(b)(1)), the stated purpose of RFP is to ensure attainment by the applicable attainment date.[1] If an area has in fact attained the standard, the stated purpose of the RFP requirement will have already been fulfilled and USEPA does not believe that the area need submit revisions providing for the further emission reductions described in the RFP provisions of section 182(b)(1).

USEPA notes that it took this view with respect to the general RFP requirement of section 172(c)(2) in the General Preamble for the Interpretation of Title I of the Clean Air Act Amendments of 1990 (57 FR 13498 (April 16, 1992)), and it is now extending that interpretation to the specific provisions of subpart 2. In the General Preamble, USEPA stated, in the context of a discussion of the requirements applicable to the evaluation of requests to redesignate nonattainment areas to attainment, that the ''requirements for RFP will not apply in evaluating a request for redesignation to attainment since, at a minimum, the air quality data for the area must show that the area has already attained. Showing that the State will make RFP towards attainment will, therefore, have no meaning at that point.'' (57 FR at 13564.)[2]

[1] USEPA notes that paragraph (1) of subsection 182(b) is entitled ''PLAN PROVISIONS FOR REASONABLE FURTHER PROGRESS'' and that subparagraph (B) of paragraph 182(c)(2) is entitled ''REASONABLE FURTHER PROGRESS DEMONSTRATION,'' thereby making it clear that both the 15 percent plan requirement of section 182(b)(1) and the 3 percent per year requirement of section 182(c)(2) are specific varieties of RFP requirements.

[2] *See also* ''Procedures for Processing Requests to Redesignate Areas to Attainment,'' from John Calcagni, Director, Air Quality Management Division, to Regional Air Division Directors, September 4, 1992, at page 6 (stating that the ''requirements for reasonable further progress * * * will not apply for redesignations because they only have meaning for areas not attaining the standard'') (hereinafter referred to as ''September 1992 Calcagni memorandum'').

Second, with respect to the attainment demonstration requirements of section 182(b)(1), an analogous rationale leads to the same result. Section 182(b)(1) requires that the plan provide for ''such specific annual reductions in emissions * * * as necessary to attain the national primary ambient air quality standard by the attainment date applicable under this Act.'' As with the RFP requirements, if an area has in fact monitored attainment of the standard, USEPA believes there is no need for an area to make a further submission containing additional measures to achieve attainment. This is also consistent with the interpretation of certain section 172(c) requirements provided by USEPA in the General Preamble to Title I, as USEPA stated there that no other measures to provide for attainment would be needed by areas seeking redesignation to attainment since ''attainment will have been reached.'' (57 FR at 13564; see also September 1992 Calcagni memorandum at page 6.) Upon attainment of the NAAQS, the focus of State planning efforts shifts to the maintenance of the NAAQS and the development of a maintenance plan under section 175A.

Similar reasoning applies to other related provisions of subpart 2 such as the contingency measure requirements of section 172(c)(9). USEPA has previously interpreted the contingency measure requirement of section 172(c)(9) as no longer being applicable once an area has attained the standard since those ''contingency measures are directed at ensuring RFP and attainment by the applicable date.'' (57 FR at 13564; see also September 1992 Calcagni memorandum at page 6.)

USEPA emphasizes that the lack of a requirement to submit the SIP revisions discussed above exists only for as long as an area designated nonattainment continues to attain the standard. If USEPA subsequently determines that such an area has violated the NAAQS, the basis for the determination that the area need not make the pertinent SIP revisions would no longer exist. The USEPA would notify the State of that determination and would also provide notice to the public in the **Federal Register**. Such a determination would mean that the area would have to address the pertinent SIP requirements within a reasonable amount of time, which USEPA would establish taking into account the individual circumstances surrounding the particular SIP submissions at issue. Thus, a determination that an area need not submit one of the SIP submittals amounts to no more than a suspension of the requirement for so long as the area continues to attain the standard.

The State must continue to operate an appropriate air quality monitoring network, in accordance with 40 CFR part 58, to verify the attainment status of the area. The air quality data relied upon to determine that the area is attaining the ozone standard must be consistent with 40 CFR Part 58 requirements and other relevant USEPA guidance and recorded in USEPA's Aerometric Information Retrieval System (AIRS).

The determinations that are being made with this action are not equivalent to the redesignation of the area to attainment. Attainment of the ozone NAAQS is only one of the criteria set forth in section 107(d)(3)(E) that must be satisfied for an area to be redesignated to attainment. To be redesignated the State must submit and receive full approval of a redesignation request for the area that satisfies all of the criteria of that section, including the requirement of a demonstration that the improvement in the area's air quality is due to permanent and enforceable reductions and the requirements that the area have a fully-approved SIP meeting all of the applicable requirements under section 110 and part D and a fully-approved maintenance plan.

Furthermore, the determinations made in this action do not shield an area from future USEPA action to require emissions reductions from sources in the area where there is evidence, such as photochemical grid modeling, showing that emissions from sources in the area contribute significantly to nonattainment in, or interfere with maintenance by, other nonattainment areas. USEPA has authority under sections 110(a)(2)(A) and 110(a)(2)(D) to require such emission reductions if necessary and appropriate to deal with transport situations.

II. Analysis of Air Quality Data

The USEPA has reviewed the ambient air monitoring data for ozone (consistent with the requirements contained in 40 CFR Part 58 and recorded in AIRS) for the Grand Rapids and Muskegon ozone nonattainment areas in the State of Michigan from 1992 through the present time. On the basis of that review USEPA has concluded that the area attained the ozone standard during the 1992–1994 period and continues to attain the standard at this time. For ozone, an area may be considered attaining the NAAQS if there are no violations, as determined in accordance with the regulation codified at 40 CFR 50.9, based on three (3) consecutive calendar years of complete, quality assured monitoring data. A violation occurs when the ozone air quality monitoring data show greater than one (1) average expected exceedance per year at any site in the area at issue. An exceedance occurs when the maximum hourly ozone concentration exceeds 0.124 parts per million (ppm). The data should be collected and quality-assured in accordance with 40 CFR part 58, and recorded in the AIRS in order for it to be available to the public for review.

The Grand Rapids and Muskegon areas have demonstrated attainment of the ozone NAAQS based on ozone monitoring data for the years 1992 through 1994. The ozone monitoring network in Grand Rapids consists of two monitors located in Kent County. A monitor was established in Ottawa County in 1989 and relocated to Allegan County in 1993. The State, however, did reestablish a monitor in Ottawa county in 1994. Two exceedances of the ozone standard have been monitored since 1992 in the Grand Rapids area, both of these occurred at the Grand Rapids monitor in Kent County. At this site, the first exceedance of 0.156 ppm occurred in 1993, and the second exceedance of 0.149 ppm occurred in 1994. The ozone monitoring network in Muskegon consists of one monitor located in Muskegon County. Three exceedances of the ozone standard have been monitored since 1992 in the Muskegon area, all three of these occurred at the Muskegon monitor in Muskegon County. At this site, one exceedance was recorded during each of the years 1992, 1993, and 1994 at concentrations of 0.129 ppm, 0.141 ppm, and 0.146 ppm, respectively. Data stored in AIRS was used to determine the annual average expected exceedances for each area for the years 1992, 1993, and 1994. Data contained in AIRS have undergone quality assurance review by the State and USEPA. Since the annual average number of expected exceedances for each monitor during the most recent three years is equal to 1.0, the Grand Rapids and Muskegon areas are considered to have attained the standard. A more detailed summary of the ozone monitoring data for the area is provided in the USEPA technical support document dated May 12, 1995.

III. Final Action

USEPA determines that the Grand Rapids and Muskegon ozone nonattainment areas have attained the ozone standard and continue to attain the standard at this time. As a consequence of USEPA's determination that the Grand Rapids and Muskegon

areas have attained the ozone standard, the requirements of section 182(b)(1) concerning the submission of the 15 percent plan and ozone attainment demonstration and the requirements of section 172(c)(9) concerning contingency measures are not applicable to the area so long as the area does not violate the ozone standard.

USEPA emphasizes that these determinations are contingent upon the continued monitoring and continued attainment and maintenance of the ozone NAAQS in the affected areas. If a violation of the ozone NAAQS is monitored in the Grand Rapids and Muskegon areas (consistent with the requirements contained in 40 CFR part 58 and recorded in AIRS), USEPA will provide notice to the public in the **Federal Register**. Such a violation would mean that the area would thereafter have to address the requirements of section 182(b)(1) and section 172(c)(9) since the basis for the determination that they do not apply would no longer exist.

As a consequence of the determinations that the areas have attained and that the reasonable further progress and attainment demonstration requirements of section 182(b)(1) and contingency measure requirements of section 172(c)(9) do not presently apply, the sanctions clocks started by USEPA as a result of the findings made on January 21, 1994 regarding incompleteness of the section 181(b)(1) 15 percent plans and 172(c)(9) contingency plans are hereby stopped as the deficiency for which the clocks were started no longer exists.

Nothing in this action shall be construed as permitting or allowing or establishing a precedent for any future request for a revision to any state implementation plan. Each request for revision to the State implementation plan shall be considered separately in light of specific technical, economic, and environmental factors and in relation to relevant statutory and regulatory requirements.

This action will become effective on July 17, 1995. However, if the USEPA receives adverse comments by July 3, 1995, then the USEPA will publish a notice that withdraws the action, and will address these comments in a subsequent final rule on the related proposed rule which is being published in the proposed rules section of this **Federal Register**.

Under the Regulatory Flexibility Act, 5 U.S.C. 600 et seq., USEPA must prepare a regulatory flexibility analysis assessing the impact of any proposed or final rule on small entities (5 U.S.C. 603 and 604). Alternatively, USEPA may certify that the rule will not have a significant impact on a substantial number of small entities. Small entities include small businesses, small not-for-profit enterprises, and government entities with jurisdiction over populations of less than 50,000. This action's determination does not create any new requirements, but allows suspension of the indicated requirements. Therefore, because the approval does not impose any new requirements, I certify that it does not have a significant impact on any small entities affected.

Section 202 of the Unfunded Mandates Reform Act of 1995 (''Unfunded Mandates Act'') (signed into law on March 22, 1995) requires that the Agency prepare a budgetary impact statement before promulgating a rule that includes a Federal mandate that may result in expenditure by State, local, and tribal governments, in aggregate, or by the private sector, of $100 million or more in any one year. Section 203 requires the Agency to establish a plan for obtaining input from and informing, educating, and advising any small governments that may be significantly or uniquely affected by the rule.

Under section 205 of the Unfunded Mandates Act, the Agency must identify and consider a reasonable number of regulatory alternatives before promulgating a rule for which a budgetary impact statement must be prepared. The Agency must select from those alternatives the least costly, most cost-effective, or least burdensome alternative that achieves the objectives of the rule, unless the Agency explains why this alternative is not selected or the selection of this alternative is inconsistent with law.

Because this final rule is estimated to result in the expenditure by State, local, and tribal governments or the private sector of less than $100 million in any one year, the Agency has not prepared a budgetary impact statement or specifically addressed the selection of the least costly, most cost-effective, or least burdensome alternative. Because small governments will not be significantly or uniquely affected by this rule, the Agency is not required to develop a plan with regard to small governments.

Under Section 307(b)(1) of the Clean Air Act, petitions for judicial review of this action must be filed in the United States Court of Appeals for the appropriate circuit by August 1, 1995. Filing a petition for reconsideration by the Administrator of this final rule does not affect the finality of this rule for the purposes of judicial review nor does it extend the time within which a petition for judicial review may be filed, and shall not postpone the effectiveness of such rule or action. This action may not be challenged later in proceedings to enforce its requirements. (See Section 307(b)(2)).

List of Subjects in 40 CFR Part 52

Environmental protection, Air pollution control, Nitrogen oxides, Ozone, Volatile organic compounds, Intergovernmental relations, Reporting and record keeping requirements.

Authority: 42 U.S.C. 4201–7601q.

Dated: May 18, 1995.

Valdas V. Adamkus,

Regional Administrator.

Part 52, chapter 1, title 40 of the Code of Federal Regulations is amended as follows:

PART 52—[AMENDED]

1. The authority citation for part 52 continues to read as follows:

Authority: 42 U.S.C. 7401–7671q.

Subpart X—Michigan

2. Section 52.1174 is amended by adding new paragraph (k) to read as follows:

* * * * *

§ 52.1174 Control strategy: Ozone.

(k) Determination—EPA is determining that, as of July 17, 1995, the Grand Rapids and Muskegon ozone nonattainment area has attained the ozone standard and that the reasonable further progress and attainment demonstration requirements of section 182(b)(1) and related requirements of section 172(c)(9) of the Clean Air Act do not apply to the area for so long as the area does not monitor any violations of the ozone standard. If a violation of the ozone NAAQS is monitored in the Grand Rapids and Muskegon ozone nonattainment area, these determinations shall no longer apply.

[FR Doc. 95–13461 Filed 6–1–95; 8:45 am]

BILLING CODE 6560–50–P

DEPARTMENT OF THE INTERIOR

Bureau of Land Management

43 Public Land Order 7146

[NM–1430–01; NMNM 89978]

Withdrawal of National Forest System Land for the Coyote Ranger District; New Mexico

AGENCY: Bureau of Land Management, Interior.

ACTION: Public land order.

SUMMARY: This order withdraws 232.50 acres of National Forest System land from mining for 20 years to protect the newly constructed Coyote Ranger District administrative facilities. The land has been and will remain open to mineral leasing.

EFFECTIVE DATE: June 2, 1995.

FOR FURTHER INFORMATION CONTACT: Hal Knox, BLM Taos Resource Area, 224 Cruz Alta Road, Taos, New Mexico, 87571, (505) 758–8851.

By virtue of the authority vested in the Secretary of the Interior by Section 204 of the Federal Land Policy and Management Act of 1976, 43 U.S.C. 1714 (1988), it is ordered as follows:

1. Subject to valid existing rights, the following described National Forest System land is hereby withdrawn from location and entry under the United States mining laws (30 U.S.C. Ch. 2 (1988)), but not from leasing under the mineral leasing laws, to protect the Coyote Ranger District administrative facilities:

New Mexico Principal Meridian

T. 23 N., R. 2 E.,
Sec. 26, S½SE¼SE¼;
Sec. 35, N½NE¼, N½SW¼NE¼, SW¼SW¼NE¼, NE¼NE¼NW¼, SE¼NW¼NE¼NW¼, S½NE¼NW¼, SE¼NW¼NW¼, E½SW¼NW¼, and SE¼NW¼.

The area described contains 232.50 acres in Rio Arriba County.

2. The withdrawal made by this order does not alter the applicability of those land laws governing the use of the National Forest System lands under lease, license or permit, or governing the disposal of their mineral or vegetative resources other than under the mining laws.

3. This withdrawal will expire 20 years from the effective date of this order unless, as a result of a review conducted before the expiration date pursuant to section 204(f) of the Federal Land Policy and Management Act of 1976, 43 U.S.C. 1714(f) 1988), the Secretary determines that the withdrawal shall be extended.

Dated: May 19, 1995.

Bob Armstrong,

Assistant Secretary of the Interior.

[FR Doc. 95–13481 Filed 6–1–95; 8:45 am]

BILLING CODE 4310–FB–P

FEDERAL EMERGENCY MANAGEMENT AGENCY

44 CFR Part 64

[Docket No. FEMA–7618]

Suspension of Community Eligibility

AGENCY: Federal Emergency Management Agency, FEMA.

ACTION: Final rule.

SUMMARY: This rule identifies communities, where the sale of flood insurance has been authorized under the National Flood Insurance Program (NFIP), that are suspended on the effective dates listed within this rule because of noncompliance with the floodplain management requirements of the program. If the Federal Emergency Management Agency (FEMA) receives documentation that the community has adopted the required floodplain management measures prior to the effective suspension date given in this rule, the suspension will be withdrawn by publication in the **Federal Register**.

EFFECTIVE DATES: The effective date of each community's suspension is the third date (''Susp.'') listed in the third column of the following tables.

ADDRESSES: If you wish to determine whether a particular community was suspended on the suspension date, contact the appropriate FEMA Regional Office or the NFIP servicing contractor.

FOR FURTHER INFORMATION CONTACT: Robert F. Shea Jr., Division Director, Program Implementation Division, Mitigation Directorate, 500 C Street, SW., Room 417, Washington, DC 20472, (202) 646–3619.

SUPPLEMENTARY INFORMATION: The NFIP enables property owners to purchase flood insurance which is generally not otherwise available. In return, communities agree to adopt and administer local floodplain management aimed at protecting lives and new construction from future flooding. Section 1315 of the National Flood Insurance Act of 1968, as amended, 42 U.S.C. 4022, prohibits flood insurance coverage as authorized under the National Flood Insurance Program, 42 U.S.C. 4001 *et seq.*, unless an appropriate public body adopts adequate floodplain management measures with effective enforcement measures. The communities listed in this document no longer meet that statutory requirement for compliance with program regulations, 44 CFR part 59 *et seq.* Accordingly, the communities will be suspended on the effective date in the third column. As of that date, flood insurance will no longer be available in the community. However, some of these communities may adopt and submit the required documentation of legally enforceable floodplain management measures after this rule is published but prior to the actual suspension date. These communities will not be suspended and will continue their eligibility for the sale of insurance. A notice withdrawing the suspension of the communities will be published in the **Federal Register**.

In addition, the Federal Emergency Management Agency has identified the special flood hazard areas in these communities by publishing a Flood Insurance Rate Map (FIRM). The date of the FIRM if one has been published, is indicated in the fourth column of the table. No direct Federal financial assistance (except assistance pursuant to the Robert T. Stafford Disaster Relief and Emergency Assistance Act not in connection with a flood) may legally be provided for construction or acquisition of buildings in the identified special flood hazard area of communities not participating in the NFIP and identified for more than a year, on the Federal Emergency Management Agency's initial flood insurance map of the community as having flood-prone areas (section 202(a) of the Flood Disaster Protection Act of 1973, 42 U.S.C. 4106(a), as amended). This prohibition against certain types of Federal assistance becomes effective for the communities listed on the date shown in the last column.

The Deputy Associate Director finds that notice and public comment under 5 U.S.C. 553(b) are impracticable and unnecessary because communities listed in this final rule have been adequately notified.

Each community receives a 6-month, 90-day, and 30-day notification addressed to the Chief Executive Officer that the community will be suspended unless the required floodplain management measures are met prior to the effective suspension date. Since these notifications have been made, this final rule may take effect within less than 30 days.

National Environmental Policy Act

This rule is categorically excluded from the requirements of 44 CFR Part 10, Environmental Considerations. No environmental impact assessment has been prepared.

Regulatory Flexibility Act

The Deputy Associate Director has determined that this rule is exempt from the requirements of the Regulatory Flexibility Act because the National Flood Insurance Act of 1968, as

amended, 42 U.S.C. 4022, prohibits flood insurance coverage unless an appropriate public body adopts adequate floodplain management measures with effective enforcement measures. The communities listed no longer comply with the statutory requirements, and after the effective date, flood insurance will no longer be available in the communities unless they take remedial action.

Regulatory Classification

This final rule is not a significant regulatory action under the criteria of section 3(f) of Executive Order 12866 of September 30, 1993, Regulatory Planning and Review, 58 FR 51735.

Paperwork Reduction Act

This rule does not involve any collection of information for purposes of the Paperwork Reduction Act, 44 U.S.C. 3501 *et seq.*

Executive Order 12612, Federalism

This rule involves no policies that have federalism implications under Executive Order 12612, Federalism, October 26, 1987, 3 CFR, 1987 Comp., p. 252.

Executive Order 12778, Civil Justice Reform

This rule meets the applicable standards of section 2(b)(2) of Executive Order 12778, October 25, 1991, 56 FR 55195, 3 CFR, 1991 Comp., p. 309.

List of Subjects in 44 CFR Part 64

Flood insurance, Floodplains.

Accordingly, 44 CFR part 64 is amended as follows:

PART 64—[AMENDED]

1. The authority citation for Part 64 continues to read as follows:

Authority: 42 U.S.C. 4001 et seq.; Reorganization Plan No. 3 of 1978, 3 CFR, 1978 Comp., p. 329; E.O. 12127, 44 FR 19367, 3 CFR, 1979 Comp., p. 376.

§ 64.6 [Amended]

2. The tables published under the authority of § 64.6 are amended as follows:

State/location	Community No.	Effective date of eligibility	Current effective map date	Date certain federal assistance no longer available in special flood hazard areas
Region II				
New York: Southampton, Village of, Suffolk County.	365343	Sept. 15, 1972, Emerg; March 9, 1973, Reg; June 2, 1995, Susp.	June 2, 1992 ...	June 2, 1995.
Region III				
Pennsylvania:				
Port Carbon, borough of, Schuylkill County.	420783	Sept. 15, 1972, Emerg; Jan. 19, 1978 Reg; June 2, 1995 Susp.	June 2, 1995 ...	Do.
St. Clair, borough of, Schuylkill County ...	420786	Nov. 24, 1972, Emerg; March 15, 1977, Reg; June 2, 1995, Susp.	.....do	Do.
Region IV				
Alabama: Tuscaloosa, city of, Tuscaloosa County.	010203	April 5, 1973, Emerg; Feb. 1, 1979, Reg; June 2, 1995, Susp.	.....do	Do.
Region V				
Ohio: Milford Center, village of, Union County.	390662	May 14, 1975, Emerg; June 22, 1995 Reg; June 2, 1995, Susp.	.....do	Do.
Wisconsin: Oshkosh, city of, Winnebago County.	550511	Nov. 12, 1971, Emerg; May 16, 1977, Reg; June 2, 1995, Susp.	.....do	Do.
Region VI				
Louisiana: Leesville, city of, Vernon Parish	220229	Oct. 17, 1974, Emerg; Jan 17, 1986, Reg; June 2, 1995, Susp.	.....do	Do.
Oklahoma:				
Pawnee, city of, Pawnee County	400163	Feb. 20, 1975, Emerg; June 19, 1985, Reg; June 2, 1995, Susp.	.....do	Do.
McClain County, unincorporated areas	400538	Sept. 10, 1990, Emerg; Feb. 3, 1993, Reg; June 2, 1995, Susp.	.....do	Do.
Region VIII				
Colorado:				
Nederland, town of, Boulder County	080255	May 2, 1977, Emerg; Aug. 1, 1979, Reg; June 2, 1995, Susp.	.....do	Do.
La Planta County, unincorporated areas .	080097	Dec. 12, 1974, Emerg; Dec. 15, 1981, Reg; Dec. 15, 1981, Susp; Dec. 28, 1983, Rein; June 2, 1995, Susp.	.....do	Do.
Utah: Joseph, town of, Sevier County	490127	Mar. 23, 1976, Emerg; Aug. 28, 1979, Reg; June 2, 1995, Susp.	.....do	Do.
Region IX				
Hawaii: Hawaii County, unincorporated areas	155166	June 5, 1970, Emerg; May 3, 1982, Reg; June 2, 1995, Susp.	.....do	Do.
Region X				
Washington: Cowlitz County, unincorporated areas.	530032	June 18, 1971, Emerg; Aug. 1, 1980, Reg; June 2, 1995, Susp.	.....do	Do.
Region III				
Delaware:				

State/location	Community No.	Effective date of eligibility	Current effective map date	Date certain federal assistance no longer available in special flood hazard areas
Bethany Beach, town of, Sussex County	105083	Nov. 12, 1971, Emerg; Apr. 6, 1973, Reg; June 16, 1995, Susp.	6–16–95	June 16, 1995.
Bethel, town of, Sussex County	100055	Jan. 22, 1976, Emerg; Jan. 16, 1981, Reg; June 16, 1995, Susp.	do	Do.
Blades, town of, Sussex County	100031	May 30, 1975, Emerg; Jan. 16, 1981, Reg; June 16, 1995, Susp.	do	Do.
Dagsboro, town of, Sussex County	100033	July 9, 1975, Emerg; June 1, 1981, Reg; June 16, 1995, Susp.	do	Do.
Dewey Beach, town of, Sussex County	100056	June 18, 1982, Emerg; June 18, 1982, Reg; June 16, 1995, Susp.	do	Do.
Fenwick Island, town of, Sussex County	105084	Nov. 19, 1971, Emerg; Mar. 23, 1973, Reg; June 16, 1995, Susp.	do	Do.
Greenwood, town of, Sussex County	100039	July 30, 1975, Emerg; Feb. 24, 1978, Reg; June 16, 1995, Susp.	do	Do.
Laurel, town of, Sussex County	100040	April 2, 1975, Emerg; Jan. 16, 1981, Reg; June 16, 1995, Susp.	do	Do.
Lewes, city of, Sussex County	100041	Mar. 23, 1973, Emerg; Mar. 15, 1977, Reg; June 16, 1995, Susp.	do	Do.
Milford, town of, Sussex County	100042	June 5, 1974, Emerg; June 1, 1977, Reg; June 16, 1995, Susp.	do	Do.
Millsboro, town of, Sussex County	100043	May 28, 1974, Emerg; Sept. 1, 1978, Reg; June 16, 1995, Susp.	do	Do.
Millville, town of, Sussex County	100044	Oct. 2, 1978, Emerg; Sept. 25, 1981, Reg; June 16, 1995, Susp.	do	Do.
Milton, town of, Sussex County	100045	Sept. 17, 1974, Emerg; Aug. 1, 1978, Reg; June 16, 1995, Susp.	do	Do.
Ocean View, town of, Sussex County	100046	July 1, 1975, Emerg; Sept. 3, 1980, Reg; June 16, 1995, Susp.	do	Do.
Rehoboth Beach, town of, Sussex County.	105086	Feb. 11, 1972, Emerg; Mar. 30, 1973, Reg; June 16, 1995, Susp.	do	Do.
Slaughter Beach, town of, Sussex County	100050	May 28, 1974, Emerg; July 2, 1980, Reg; June 16, 1995, Susp.	do	Do.
South Bethany, town of, Sussex County	100051	Sept. 15, 1972, Emerg; Oct. 6, 1976, Reg; June 16, 1995, Susp.	do	Do.
Sussex County, unincorporated areas	100029	Apr. 16, 1971, Emerg; Oct. 6, 1976, Reg; June 16, 1995, Susp.	do	Do.
Pennsylvania:				
Point Marion, borough of, Fayette County	421617	July 3, 1974, Emerg; July 4, 1988, Reg; June 16, 1995, Susp.	do	Do.
Upper Chichester, township of, Delaware County.	420439	Dec. 17, 1971, Emerg; May 16, 1977, Reg; June 16, 1995, Susp.	do	Do.
West Virginia: Mercer County, unincorporated areas.	540124	Dec. 23, 1975, Emerg; Feb. 1, 1985, Reg; June 16, 1995, Susp.	do	Do.
Region IV				
Florida:				
Gulf Breeze, city of, Santa Rosa County	120275	July 10, 1970, Emerg; Sept. 1, 1977, Reg; June 16, 1995, Susp.	do	Do.
Monroe County, unincorporated areas	125129	June 12, 1970, Emerg; June 15, 1973, Reg; June 16, 1995, Susp.	do	Do.
Tennessee: Polk County, unincorporated areas.	470261	Apr. 9, 1993, Emerg; June 16, 1995, Reg; June 16, 1995, Susp.	do	Do.
Region V				
Indiana: Bloomington, city of, Monroe County	180169	July 8, 1972, Emerg; June 15, 1978, Reg; June 16, 1995, Susp.	do	Do.
Region VI				
Oklahoma:				
Midwest City, city of, Oklahoma County	400405	Jan. 16, 1975, Emerg; May 19, 1981, Reg; June 16, 1995, Susp.	do	Do.
Newcastle, city of, McClain County	400103	July 18, 1975, Emerg; Dec. 15, 1983, Reg; June 16, 1995, Susp.	do	Do.
Region VII				
Iowa:				
Ames, city of, Storey County	190254	July 25, 1974, Emerg; Jan. 2, 1981, Reg; June 16, 1995, Susp.	do	Do.
Mason City, city of, Cerro Gordo County	190060	Mar. 21, 1975, Emerg; Dec. 2, 1980, Reg; June 16, 1995, Susp.	do	Do.

State/location	Community No.	Effective date of eligibility	Current effective map date	Date certain federal assistance no longer available in special flood hazard areas
Jackson County, unincorporated areas	190879	Aug. 17, 1979, Emerg; May 1, 1990, Reg; June 16, 1995, Susp.	.....do	Do.
Kansas: Pittsburg, city of, Crawford County ...	200072	Nov. 14, 1974, Emerg; May 1, 1979, Reg; June 16, 1995, Susp.	.....do	Do.
Region X				
Washington: Thurston County, unincorporated areas.	530188	Sept. 13, 1974, Emerg; Dec. 1, 1982, Reg; June 16, 1995, Susp.	.....do	Do.

Code for reading third column: Emerg.—Emergency; Reg.—Regular; Rein.—Reinstatement; Susp.—Suspension.

(Catalog of Federal Domestic Assistance No. 83.100, ''Flood Insurance.'')

Issued: May 24, 1995.

Frank H. Thomas,

Deputy Associate Director, Mitigation Directorate.

[FR Doc. 95–13519 Filed 6–1–95; 8:45 am]

BILLING CODE 6718–21–P

DEPARTMENT OF HEALTH AND HUMAN SERVICES

Administration for Children and Families

45 CFR Part 1357

RIN AB44

Child Welfare Services Program

AGENCY: Administration on Children, Youth and Families; Administration for Children and Families, HHS.

ACTION: Final rule.

SUMMARY: The Department of Health and Human Services is issuing this final rule to amend the regulations governing direct payments to Indian Tribal Organizations (ITOs) for child welfare services. It eliminates the requirement that to be eligible ITOs must provide services under contract (or grant) with the Secretary of the Interior under section 102 of the Indian Self-Determination Act, and adds a description of the formula used to calculate the amount of Federal funds available to eligible ITOs under title IV–B, Subpart 1 of the Social Security Act. We believe that complex and limiting eligibility requirements and low grant amounts have resulted in low ITO participation rates. The amendment will improve the quality of Indian child welfare services nationally by broadening eligibility and by allowing for an increase in grant amounts.

EFFECTIVE DATE: October 1, 1995.

FOR FURTHER INFORMATION CONTACT: Olivia A. Golden, Administration on Children, Youth and Families, P.O. Box 1182, Washington, DC 20013, (202) 205–8474.

SUPPLEMENTARY INFORMATION:

I. Program Description and Background

Title IV–B, Subpart 1, of the Social Security Act (the Act), the Child Welfare Services program, is a formula grant program. Each State receives a grant representing its share of the current authorized amount. The grants provide States with Federal support for a wide variety of State child welfare services including: preplacement preventive services to strengthen families and avoid placement of children; services to prevent abuse and neglect; services for the provision of foster care and adoption; and certain protections for children in foster care.

The grant funds can be used to provide services regardless of the income of the families and children who are in need of such services.

The Child Welfare Services program has been a part of the Social Security Act (the Act) since the Act's inception in 1935. In 1968, Congress transferred this program to title IV, Part B of the Act (sections 420–425 of the Act). Historically, title IV–B has provided Federal grants to States to establish, extend and strengthen child welfare services. Under this program, services are available to all children, including the homeless, neglected, dependent and those with disabilities.

The Adoption Assistance and Child Welfare Act of 1980 (Pub. L. 96–272) was enacted on June 17, 1980. In addition to amending title IV–B, Public Law 96–272 established a new program, the title IV–E program, which replaced on October 1, 1982, the title IV–A foster care program in the States. The law created links between the two programs with numerous program and fiscal incentives. The impetus behind the passage of Public Law 96–272 was the belief of Congress and most State child welfare administrators, supported by extensive research, that the public child welfare system responsible for serving dependent and neglected children, youth and families had become a receiving or holding system for children living away from their parents. Congress envisioned in the new legislation a system that would help families remain together by assisting parents in carrying out their roles and responsibilities and providing alternative permanent placement for those children who cannot return to their own homes.

Public Law 96–272 created section 428 of the Act which provides for direct payments to certain Indian Tribal Organizations, of funds authorized under title IV–B for child welfare services to certain ITOs. Effective June 22, 1983, regulations published at 45 CFR 1357.40 implemented section 428 of the Act, and specified which ITOs are eligible to receive funds directly and under what circumstances direct payments should be made available. In determining which ITOs would be eligible for direct funding, the Department decided to make the option of applying for direct funding available to those ITOs which had contracted with, or received a grant from, the Bureau of Indian Affairs under Public Law 93–638 (Indian Self-Determination Act) for child welfare services. This requirement was intended to limit direct funding to ITOs that had established the need for child welfare services and had taken advantage of the opportunity for direct management and operation of a tribal child welfare services program. Under this approach, direct grants would be added to existing ongoing Indian child welfare programs operated by the tribal organizations. The title IV–B funds were intended to be linked to the other major Federal Indian social services program to support Indian self-determination, and complement the provisions of the Indian Child Welfare Act of 1978 (Pub. L. 95–608). This was considered important by the Department because title IV–B funds alone are

insufficient for an ITO to establish and operate a basic child welfare services program.

We believe that the requirement that ITOs must contract, or receive a grant, for child welfare services under Public Law 93–638 in order to be eligible for direct funding under title IV–B is no longer necessary. In recent years, Federal social service funding under the Indian Child Welfare Act (ICWA) has increased significantly. In fiscal year 1994, 530 tribes are expected to receive $22,905,000 under ICWA. We are aware that there are ITOs which do not receive Indian Self-Determination Act funding although they are operating child welfare services programs utilizing ICWA funding, and others which could choose to begin to provide child welfare services.

II. Discussion of the Comments and Final Rule

On October 20, 1994, the Department published a Notice of Proposed Rulemaking (NPRM) in the **Federal Register** [59 FR 52951] that proposed a revision of 45 CFR Part 1357, the regulation governing direct payments to Indian Tribal Organizations (ITOs). Interested persons were given 60 days in which to comment on the proposed rule. The following is a summary of the comments from the respondents and the Department's response.

The Department received comments from twenty-one respondents, including Tribal governments, Tribal human services agencies, national Indian organizations, a Federal agency, and a State agency. Nineteen comments supported changing the multiplication factor from 1.4 to 3.0. Eighteen responses supported elimination of the Indian Self-Determination Act eligibility requirement. One respondent opposed elimination of the Indian Self-Determination Act eligibility requirement. Two respondents recommended changes to the proposed rule.

Comment

One respondent opposed elimination of the Indian Self-Determination Act eligibility requirement, and requested that an impact study be conducted first to determine the effect of expanding the population of Indians served on the population of Indians currently served under title IV–B, Part 1. The respondent recommended that the results of the study be published in the **Federal Register** along with the proposed definition changes and proposed funding allocation, and that there be an opportunity for comments.

Response

This comment appears to reflect two concerns: that the change allows for native American consortiums to receive direct title IV–B funding, and that the resulting increase of population which could participate in title IV–B funding could adversely impact the program if not funded appropriately. In response, it should be noted that the current regulation allows Indian consortiums to receive title IV–B direct funding. The proposed rule did not change this. However, the proposed rule, by eliminating the Indian Self-Determination Act requirement would likely expand the population of Indian children and families served under title IV–B direct funding. If such a change in the population served did occur, the corresponding increase of funding to tribes would result in a corresponding equivalent decrease in funding available to the State title IV–B agencies. There would be no decrease in title IV–B funding available to those Indian Self-Determination Act tribes currently receiving direct title IV–B funding as a result of increasing the Indian population under this program. We do not believe that an impact study is therefore necessary or appropriate.

Comment

One respondent recommended delay of implementation of the multiplication factor change to FY 1996 and implementation in two stages: citing as examples, 2.25 in FY 1996, and 3.0 in FY 1997. The respondent expressed concern about the impact on a State Agency due to the significant percentage of the budget reduction anticipated and the lack of adequate advance time for a State Agency to plan for the change if implemented in FY 1995, as proposed.

Response

The Department agrees that a large increase in direct funding of Tribes, coming late in a State's budget cycle would impose serious problems. In order to allow those States that are likely to be significantly impacted by the final regulation to adequately plan for the change, the Department will delay the effective date of the final regulation to October 1, 1995. However, we do not agree with the proposal to raise the multiplication factor in stages because we do not believe that a lower multiplication factor than 3.0 would be sufficient to achieve the purpose of the policy, which is to substantially increase the participation of the tribes and raise the quality of Indian child welfare services. Although we understand the State's concern about the need to maintain adequate State funding to continue to serve the Indian population of enrolled tribal members living off reservation, the title IV–B appropriations are not intended to adequately meet all of a State's child welfare services needs. It is expected that States will fund a significant portion of State child welfare services from other sources.

Comment

One respondent recommended replacing the proposed funding formula with a $20,000 base level of funding per Tribe, plus a percentage for each child. This comment opposes the proposed formula because small Tribes cannot sustain a viable program if this proposed funding formula to tribes is approved and because small tribes have the same base cost of providing services.

Response

Although we understand the concern that the funding formula does not adequately meet the needs of the smaller tribes, the Department believes that title IV–B is not sufficient to sustain base level plus percentage funding for every Tribe and also fund those States with either a large number of Tribes and/or a large population of Tribal children. Title IV–B is intended to supplement other State and Tribal child welfare resources. Under the Department's plan for increasing the multiplication factor from 1.4 to 3.0, the Tribes will receive twice the dollars per child in comparison with the States. The base level plus percentage proposal would result in differentials far greater in certain States. The proposed change as stated in the NPRM maintains more of a balance between the Department's decision to more adequately fund tribes, and the Federal responsibility to the States to assist them to meet the needs of the children served in their child welfare systems.

The Final Rule

This final rule revises paragraph (a) to eliminate the Indian Self-Determination Act eligibility requirement. Paragraph (a), as revised, states that ''any ITO that meets the definitions in section 428(c) of the Act, or any consortium or other group of eligible tribal organizations authorized by the membership of the tribes to act for them is eligible to apply for direct funding if the Indian tribe, consortium or group has a plan for child welfare services provided by the ITO that is jointly developed by the ITO and the Department''.

In determining the amount of direct funding available to an ITO eligible under the existing regulation, the

Secretary currently applies a formula similar to the one used to calculate the title IV–B allotments of the territories. This formula takes into consideration the Indian tribe's resident population under 21 and its per capita income.

The current formula for calculating an ITO's allotment results in an amount which bears the same ratio to the total State's title IV–B allotment as the product of 1.4 times the proportion of the Indian tribe's resident population under age 21 to the State's total population under age 21. The 1.4 multiplication factor has not resulted in grant amounts large enough to make it worthwhile for many tribes to apply for title IV–B. By June 1993, only 24 tribes were receiving direct title IV–B grants totaling $549,340. The average grant available to specified ITOs was $22,889, and grants ranged from a high of $166,468 to a low of $648.

The Department plans to change the multiplication factor to 3.0 for fiscal year 1996 in order to improve the quality of Indian child welfare nationally. For comparison purposes, using the fiscal year 1993 figures given above, this would have raised the average amount available to the specified ITO's to $45,778, and grants would have ranged from a high of $332,936 to a low of $1,296.

Paragraph (g)(6) contains the Department's formula for the calculation of ITO allotments. The multiplication factor will be adjusted in future years based on the Department's experience, if necessary, in order to achieve the purposes of the Act. Any decision to change the multiplication factor will be promulgated through the issuance of an Information Memorandum under the ACYF policy issuance system.

Except for delaying the effective date to October 1, 1995, we have made no changes in the final rule as proposed in the Notice.

III. Impact Analysis

Executive Order 12866

Executive Order 12866 requires that regulations be written to ensure that they are consistent with the priorities and principles set forth in the Executive Order. The Department has determined that the regulations are consistent with these priorities and principles. This final rule will not result in more costs because the increased funding to Indian tribes and ITOs will come from the change in the allotment formula.

Regulatory Flexibility Act of 1980

Consistent with the Regulatory Flexibility Act of 1980 (5 U.S.C. Ch. 5), the Department tries to anticipate and reduce the impact of rules and paperwork requirements on small businesses. For each rule with a ''significant economic impact on a substantial number of small entities'' an analysis is prepared describing the rule's impact on small entities. Small entities are defined in the Act to include small businesses and small non-profit organizations. This regulation would affect States and Indian tribes, which are not ''small entities'' within the meaning of the Act. For these reasons, the Secretary certifies that this rule will not have a significant impact on a substantial number of small entities.

Paperwork Reduction Act

Under the Paperwork Reduction Act of 1980, Public Law 96–511, all Departments are required to submit to the Office of Management and Budget (OMB) for review and approval any reporting or recordkeeping requirements in a proposed or final rule. This final rule contains no reporting or recordkeeping requirements. Therefore no submission to OMB is required.

List of Subjects in 45 CFR Part 1357

Adoption and foster care, Child welfare, Child welfare services, State plan, Indians, Reporting and recordkeeping requirements.

(Catalog of Federal Domestic Assistance Program Number 93.645, Child Welfare Services—State Grants)

Dated: May 12, 1995.

Mary Jo Bane,

Assistant Secretary for Children and Families.

For the reasons set forth in the preamble, 45 CFR 1357.40 is amended as follows:

PART 1357—REQUIREMENTS APPLICABLE TO TITLE IV–B

1. The authority statement for Part 1357 continues to read as follows:

Authority: 42 U.S.C. 620; 42 U.S.C. 670 et seq.; 42 U.S.C. 1302.

2. Section 1357.40 is amended by revising the heading and paragraph (a) and by adding paragraph (g)(6) to read as follows:

§ 1357.40 Direct payments to Indian Tribal Organizations (title IV–B, subpart 1, child welfare services).

(a) *Who may apply for direct funding?* Any Indian Tribal Organization (ITO) that meets the definitions in section 428(c) of the Act, or any consortium or other group of eligible tribal organizations authorized by the membership of the tribes to act for them, is eligible to apply for direct funding if the ITO, consortium or group has a plan for child welfare services that is jointly developed by the ITO and the Department.

* * * * *

(g) *Grants: General.*

* * * * *

(6) In order to determine the amount of Federal funds available for a direct grant to an eligible ITO, the Department shall first divide the State's title IV–B allotment by the number of children in the State, then multiply the resulting amount by a multiplication factor determined by the Secretary, and then multiply that amount by the number of Indian children in the ITO population. The multiplication factor will be set at a level designed to achieve the purposes of the Act and revised as appropriate.

[FR Doc. 95–13507 Filed 6–1–95; 8:45 am]

BILLING CODE 4184–01–P

DEPARTMENT OF ENERGY

48 CFR Parts 933 and 970

RIN 1991–AB20

Acquisition Regulation; Department of Energy Management and Operating Contracts

AGENCY: Department of Energy.

ACTION: Final rule.

SUMMARY: The Department of Energy (DOE) today amends the Department of Energy Acquisition Regulation (DEAR) to modify certain requirements for management and operating contractor purchasing systems. These requirements are revised to identify certain purchasing system objectives and standards; eliminate the application of the ''Federal norm''; and place greater reliance on commercial practices.

EFFECTIVE DATE: June 2, 1995.

FOR FURTHER INFORMATION CONTACT: James J. Cavanagh, Office of Contractor Management and Administration (HR–55), U.S. Department of Energy, 1000 Independence Avenue, SW., Washington, D.C. 20585; telephone 202–586–8257.

SUPPLEMENTARY INFORMATION:

Table of Contents

I. Background.
II. Disposition of Comments.
III. Procedural Requirements.
A. Review Under Executive Order 12866.
B. Review Under the National Environmental Policy Act.
C. Review Under the Paperwork Reduction Act.
D. Review Under the Regulatory Flexibility Act.
E. Review Under Executive Order 12612.

F. Review Under Executive Order 12778.

I. Background

A proposed rule was published in the March 2, 1995, **Federal Register** at 60 FR 11646. It proposed to amend the Department of Energy Acquisition Regulation (DEAR) to revise the requirements for management and operating (M&O) contractor purchasing systems by eliminating the concept of the ''Federal norm.'' In lieu of the detailed tenets contained in DEAR subpart 970.71, which have resulted in the inefficient layering of non-commercial systems and practices, the Department has identified certain purchasing system objectives and standards which it believes are common to superior purchasing activities, whether they be commercial or public. In this regard, the proposed rule proposed to amend, revise or remove §§ 933.170, 970.5204–22, 970.7101, 970.7102, and 970.7103 of the DEAR.

The March 2 publication also proposed the removal of DEAR 970.7106, which prescribed procedures for the handling of mistake in bid situations in purchasing by M&O contractors. Further, the Department proposed the removal of DEAR 970.7107 which, until today, provided guidelines for the consideration of subcontractor level protests. The removal of this section is consistent with the General Accounting Office proposed rule published in the **Federal Register** on January 31, 1995 at 60 FR 5871.

Subsequent to the March 2 notice of proposed rulemaking, the Department published an amendment to the proposed rule in the April 27, 1995, **Federal Register** at 60 FR 20663. The amendment dealt with administrative matters, mostly technical, that DOE reserved for further analysis during the comment period for the March 2 notice of proposed rulemaking. The comment period on the April 27 amendment to the proposed rulemaking ended on May 30, 1995. The Department wishes to effect the changes set forth in the March 2 proposed rulemaking and the April 27 amendment thereto as quickly as possible to enable the DOE contractor community to implement the changes to Subpart 970.71 of the DEAR without delay. Accordingly, the Department is finalizing the changes in the March 2 proposed rulemaking and the April 27 amendment in two stages. With two exceptions, today's rule finalizes the changes proposed in March 2 notice of proposed rulemaking. The two exceptions are the changes proposed to be made to the Contractor Purchasing System clause at § 970.5204–22 and § 970.7104. These proposed changes were affected by the April 27 amendment and, therefore, are being held in abeyance pending consideration of comments on the April 27 amendment. It is the intention of the Department to incorporate the revised and new clauses provided for in the April 27 amendment into existing M&O contracts as soon as practicable after the effective date of the second final rule.

II. Disposition of Comments

Comments on the March 2, 1995 notice of proposed rulemaking were received from a total of eleven commenters, nine of which are organizations and two of which are individuals. All of the organizations are contractors which have been awarded DOE M&O contracts. Nine of the commenters expressed support for the proposed rule and its intended effects upon the subcontracting processes of the Department of Energy's M&O contractors. Six commenters offered comments recommending revisions. Some of the recommendations were considered not significant, non-substantive, or editorial and are not discussed in the disposition of comments. Other recommendations were determined to be outside the scope of this rulemaking and, therefore, were not considered in formulating this final rule.

Comments related to DEAR Clause 970.5204–22 and DEAR § 970.7104 are reserved for resolution until the April 27, 1995 amendment to the March 2, 1995 notice of proposed rulemaking is finalized and are, therefore, not addressed in this final rule.

1. Policies and Procedures

One commenter suggests that DOE should clarify whether the proposed rule would apply to performance-based management contractors, DOE's so-called environmental remediation management contractors, and fixed price and cost contracts. This rule amends DEAR Part 970 and accordingly affects only M&O contracts which are the subject matter of the part. Performance-based contracts are a new form of M&O contract and are therefore affected. The rule also would affect M&O subcontracts which may be cost-type or fixed-price. This final rule does not apply to environmental restoration management contracts, or any other non-M&O contract.

The same commenter also recommends that we retitle Part 970 as ''Prime Contractors.'' DEAR Part 970 is appropriately titled ''DOE Management and Operating Contracts'' as its scope is limited to this subject; therefore, no change has been made.

In addition, the same commenter requests that we define the ''Federal norm.'' A definition will not be provided since the purpose of this rulemaking is, among other things, to delete the concept from Subpart 970.71.

Another commenter recommends that DOE remove Subpart 970.71 entirely and use the appropriate subcontracts clause from 52.244 of the Federal Acquisition Regulation (which would be the clause at 52.244–2). This commenter believes that this clause provides a sufficient framework for effective oversight of M&O subcontracting activities by DOE. The recommended change has not been adopted. The experience of this Department and its predecessors is that many unusual situations arise in subcontracting activities by DOE's M&O contractors that require treatment specific to the provisions of M&O contracts and DOE programs. Further, the amended DEAR Subpart 970.71 focuses more on outcome than processes and more clearly defines what the Department expects of its contractors by establishing performance objectives.

One commenter states that the phrase ''and further * * * for review and acceptance'' be removed from § 970.7102(b)(1), doing away with the requirement for submission of the M&O contractor's written purchasing system and methods to DOE upon award or extension of the contract. The suggested change has not been adopted because the opportunity to review the system at that point in time is critical to effective oversight by DOE.

Three commenters suggest additional language or changes to the revision to § 970.7102(b)(3) incorporating FAR 44.2 as the standard for review by DOE of proposed subcontract transactions. One commenter points out that the FAR provision requires review by the Government of substantially all proposed subcontracts even where the contractor has an approved system. The second suggests adding the phrase ''for conformance with the procedural requirements of the contractor's written systems and methods'' after the phrase ''pursuant to FAR 44.2.'' The third would substitute ''pursuant to the contractor's approved written description of its purchasing system and methods'' for the phrase incorporating FAR 44.2. The change to § 970.7102(b)(3) was not intended to place more stringent requirements on contractors, but rather to establish review procedures which are consistent with FAR 44.2. The Department agrees that other review procedures may be approved consistent with the contractor's approved purchasing

system procedures, and accordingly has revised § 970.7102(b)(3) to clarify this intent in the final rule.

Another commenter stated that the proposed rule was unclear regarding what contracting purchasing system objectives, expectations and standards will replace the ''Federal norm'' and whether they will be negotiated items or mandated by the DOE. Section 970.7103(a) clearly states the objectives of M&O purchasing systems. Section 970.7103 (b) and (c) set forth the requirements and expectations of the Department as to acceptable purchasing systems. Those provisions state the purchasing system requirements in terms of principles and results which the contractor must attain, and are necessarily negotiable as to specific approaches and methods which may then be tailored to the specific circumstances of the contractor mission, operations and site. Therefore, no change has been made to proposed § 970.7103.

Two commenters recommended the deletion of the word ''directly'' from the first sentence of proposed § 970.7103(c). The recommendation has not been adopted. Certainly, the FAR does not directly apply to purchasing activities of an M&O contractor or any other type of Federal contractor. However, certain conditions found in the FAR do apply to subcontracting transactions through flowdown requirements, *e.g.*, Truth in Negotiations submissions, Cost Accounting Standards, various labor provisions, or otherwise.

One commenter questioned the implicit assumption in the proposed § 970.7103(d) that there is a ''best'' in commercial purchasing practices and procedures. The comment further noted that it is unclear who is to decide what is ''best,'' the contractor or the DOE. The purpose of the change in the Department's policy regarding contractor purchasing systems and methods is to allow M&O contractors to make maximum use of efficient and effective commercial business practices in their subcontracting. Although there is no established list of best commercial practices that generally fits all situations, there is a growing body of research into and knowledge of effective purchasing techniques. As stated in the proposed § 970.7103(a), contractors are expected to use their experience, expertise, and initiative consistent with Subpart 970.71. This approach provides these contractors with great discretion in designing their purchasing systems and methods. It is the intention of the Department, however, to work collegially with its contractor community to establish mechanisms by which commercial purchasing trends and best practices may be periodically identified and assessed for inclusion in contractor purchasing systems. It is further the intention of the Department to perform its fiduciary responsibility by evaluating contractors' practices to ensure the appropriate expenditure of funds.

Another commenter recommended that all of § 970.7103(d) after the first sentence be deleted. The suggested deletion has not been accepted because such a statement of principles is necessary to assure agreement between the Department and its M&O contractors as to the foundation of the purchasing system that is to be developed and described.

Two commenters recommended the alteration of § 970.7103(d)(1) to substitute ''best value'' for ''fair and reasonable prices.'' One commenter stated that this change would be consistent with the proposed changes in § 970.7103 (c) and (d). The Department does not believe that these terms are inconsistent. The discretion provided by the provisions of this revision to DEAR 970.71 allow for purchasing using a best value approach. The use of ''fair and reasonable'' in the context of 970.7103(d)(1) makes clear the standard against which the results of the purchase will be assessed.

2. Protest Procedures

Two commenters question what process for protests against award of subcontracts by DOE M&O contractors will replace that which is being deleted by this final rule at § 970.7107. One commenter stated that DOE should identify any circumstances where it will request GAO jurisdiction. Consistent with the preamble of the proposed rule on March 2, 1995, this final rule deletes the guidelines in DEAR 970.7107 for consideration of subcontractor protests. This result is consistent with the GAO proposed rule of January 31, 1995 (60 FR 5871). The Department has advised the GAO of our decision. At the present time, we do not foresee any particular circumstances where DOE will request GAO subcontractor protest resolution assistance.

The second commenter questions ''whether DOE will continue to accept and rule on [subcontractor] protests.'' The Department will not continue to accept or rule on subcontractor protests on a subcontract awarded after the effective date of this rule. As noted in the preamble to the proposed rule and this final rule, DEAR § 933.170 and § 970.7107 have been deleted in recognition of the elimination of the ''Federal norm.'' The Department believes that disagreements over the award of individual subcontracts should be resolved in the same manner used by non-Federal entities and their suppliers. The Department has endorsed the contractors' use of alternative disputes resolution where appropriate.

3. DOE Oversight

The remaining comments received deal with the question of controls on M&O contractor purchasing systems and the process by which the controls will be enforced. This rule does not obviate the need for effective contract administration. In fact, initially the Department's participation in the development of an M&O purchasing system based upon ''best commercial practices'' may actually increase. We expect that the nature of DOE's oversight activity will change coincident with the identification, adoption, and systemic reflections of effective commercial practices consistent with the overriding expectations for contractor purchasing systems. The Department intends to focus its oversight on results, as opposed to process, and is working with its contractor base to establish meaningful outcome oriented performance indicators.

Another commenter recommended that DOE clarify whether M&O contractors are required to seek competition in subcontracting. The final rule at 970.7103(d)(4) establishes the use of effective competition as a system standard. This term, however, is not intended to equate to the Federal concept of full and open competition.

Other comments requested clarification of the application of certain statutory and regulatory requirements on the award of subcontracts (e.g., socio-economic and Buy American requirements). The current rulemaking does not effect the requirements of public law, applicable regulations, or the terms and conditions of the M&O contracts. For example, the requirement is for M&O contractors to put forth their best efforts to achieve agreed upon goals negotiated in their small business subcontracting plan. This rule neither defines, nor limits, the approaches that the contractor may utilize to achieve the results sought. Issues relating to specific statutory and regulatory requirements previously identified in § 970.7104 will be addressed in the final rule based upon the April 27, 1995 amendment.

One commenter stated that it is unclear whether the contractor can unilaterally implement the changes that it believes are necessary as a result of the proposed rule or whether DOE will require that such changes be submitted

to it for review and approval. As stated in § 970.7103(b)(1), the contractor's purchasing systems and methods shall be submitted to the contracting officer for review and acceptance. Changes to existing systems, such as those required to implement this rule, are substantive and will require review and approval by the contracting officer. The Department is currently working with its contractor community to identify effective commercial purchasing practices and intends to be a constructive participant in the re-engineering of contractor purchasing systems.

Another commenter asks whether costs resulting from the implementation of this rule will be allowable costs. Costs associated with implementation of this rule are reimbursable expenses, so long as they are reasonable, allowable and allocable as set forth in the contract's cost principles.

The same commenter also recommends that a periodic review of the effectiveness of the changes resulting from this final rule be made, including the potential effects on small, small disadvantaged, and small women-owned businesses. The comment goes on to recommend that DOE engage an outside consultant. The Department, as part of ongoing contract administration as well as when periodically assessing the continued approval of a contractor's purchasing system, will perform an evaluation of the impact of the changes effected by this rule. The Department does not believe that outside consultative services are required for such assessments.

Finally, that commenter questions whether existing contracts will be modified to reflect the effects of this rule. The last paragraph of the Background section of the notice of proposed rule stated, ''It is the intention of the Department to incorporate the changes made by this proposed rule into existing management and operating contracts as soon as practicable after the effective date of a final rule.''

III. Procedural Requirements

A. Review Under Executive Order 12866

This regulatory action has been determined not to be a ''significant regulatory action'' under Executive Order 12866, ''Regulatory Planning and Review,'' (58 FR 51735, October 4, 1993). Accordingly, this action was not subject to review under the Executive Order by the Office of Information and Regulatory Affairs.

B. Review Under the National Environmental Policy Act

Pursuant to the Council on Environmental Quality Regulations (40 CFR parts 1500–1508), the Department has established guidelines for its compliance with the provisions of the National Environmental Policy Act (NEPA) of 1969 (42 U.S.C. 4321 *et seq.*). Pursuant to appendix A of subpart D of 10 CFR part 1021, National Environmental Policy Act Implementing Procedures (Categorical Exclusion A6), the Department of Energy has determined that this final rule is categorically excluded from the need to prepare an environmental impact statement or environmental assessment.

C. Review Under the Paperwork Reduction Act

To the extent that new information collection or record keeping requirements are imposed by this rulemaking, they are provided for under Office of Management and Budget paperwork clearance package No. 1910–0300. No new information collection is proposed by this rule.

D. Review Under the Regulatory Flexibility Act

The proposed rule was reviewed under the Regulatory Flexibility Act of 1980, Public Law 96–354, which requires preparation of a regulatory flexibility analysis for any rule which is likely to have significant economic impact on a substantial number of small entities. DOE concluded that the rule will have no impact on interest rates, tax policies or liabilities, the cost of goods or services, or other direct economic factors. It will also not have any indirect economic consequences, such as changed construction rates. Accordingly, DOE certified that this rule will not have a significant economic impact on a substantial number of small entities and, therefore, no regulatory flexibility analysis has been prepared. DOE did not receive any comments on this certification.

E. Review Under Executive Order 12612

Executive Order 12612 entitled ''Federalism,'' 52 FR 41685 (October 30, 1987), requires that regulations, rules, legislation, and any other policy actions be reviewed for any substantial direct effects on States, on the relationship between the Federal Government and the States, or in the distribution of power and responsibilities among various levels of Government. If there are sufficient substantial direct effects, then the Executive Order requires preparation of a federalism assessment to be used in all decisions involved in promulgating and implementing a policy action. The Department of Energy has determined that this final rule will not have a substantial direct effect on the institutional interests or traditional functions of States.

F. Review Under Executive Order 12778

Section 2 of Executive Order 12778 instructs each agency to adhere to certain requirements in promulgating new regulations and reviewing existing regulations. These requirements, set forth in sections 2(a) and (b)(2), include eliminating drafting errors and needless ambiguity, drafting the regulations to minimize litigation, providing clear and certain legal standards for affected legal conduct, and promoting simplification and burden reduction. Agencies are also instructed to make every reasonable effort to ensure that the regulation: specifies clearly any preemptive effect, effect on existing Federal law or regulation, and retroactive effect; describes any administrative proceedings to be available prior to judicial review and any provisions for the exhaustion of such administrative proceedings; and defines key terms. DOE certifies that this rule meets the requirements of sections 2(a) and 2(b) of Executive Order 12778.

List of Subjects in 48 CFR Parts 933 and 970

Government procurement.

Issued in Washington, DC, on May 26, 1995.

Richard H. Hopf,

Deputy Assistant Secretary for Procurement and Assistance Management.

For the reasons set forth in the preamble, Chapter 9 of Title 48 of the Code of Federal Regulations is amended as set forth below.

PART 933—PROTESTS, DISPUTES, AND APPEALS

1. The authority citation for Part 933 continues to read as follows:

Authority: 42 U.S.C. 7254; 40 U.S.C. 486(c).

§ 933.170 [Removed]

2. Section 933.170, Subcontract level protests, is removed.

PART 970—DOE MANAGEMENT AND OPERATING CONTRACTS

3. The authority citation for Part 970 continues to read as follows:

Authority: Sec. 161 of the Atomic Energy Act of 1954 (42 U.S.C. 2201), sec. 644 of the Department of Energy Organization Act, Pub. L. 95–91 (42 U.S.C. 7254).

§ 970.7101 [Amended]

4. Section 970.7101, General, is amended by removing paragraphs (c) and (d).

§ 970.7102 [Amended]

5. Section 970.7102, DOE responsibility, is amended at: Paragraph (a) to remove the parenthetical last two sentences at the end of the paragraph; paragraph (b)(3) by removing the words ''to assure that management and operating contractors implement DOE policies and requirements as defined in this subpart, in accordance with the contractor's accepted system and methods'' and adding in its place the words ''pursuant to 48 CFR (FAR) 44.2 or as set forth in the contractor's approved system and methods''; and paragraph (b)(4) by revising the last parenthetical ''(See Subpart 944.3 and 970.7108)'' to read ''(See 970.7103)''.

6. Section 970.7103, Policies, is revised to read as follows:

§ 970.7103 Contractor purchasing system.

The following shall apply to the purchasing systems of management and operating contractors:

(a) The objective of a management and operating contractor's purchasing system is to deliver to its customers on a timely basis those best value products and services necessary to accomplish the purposes of the Government's contract. To achieve this objective, contractors are expected to use their experience, expertise and initiative consistent with this subpart.

(b) The purchasing systems and methods used by management and operating contractors shall be well-defined, consistently applied, and shall follow purchasing practices appropriate for the requirement and dollar value of the purchase. It is anticipated that purchasing practices and procedures will vary among contractors and according to the type and kinds of purchases to be made.

(c) Contractor purchases are not Federal procurements, and are not directly subject to the Federal Acquisition Regulations in 48 CFR. Nonetheless, certain Federal laws, Executive Orders, and regulations may affect contractor purchasing, as required by statute, regulation, or contract terms and conditions.

(d) Contractor purchasing systems shall identify and apply the best in commercial purchasing practices and procedures (although nothing precludes the adoption of Federal procurement practices and procedures) to achieve system objectives. Where specific requirements do not otherwise apply, the contractor purchasing system shall provide for appropriate measures to ensure the:

(1) Acquisition of quality products and services at fair and reasonable prices;

(2) Use of capable and reliable subcontractors who either

(i) Have track records of successful past performance, or

(ii) Can demonstrate a current superior ability to perform;

(3) Minimization of acquisition lead-time and administrative costs of purchasing;

(4) Use of effective competitive techniques;

(5) Reduction of performance risks associated with subcontractors, and facilitation of quality relationships which can include techniques such as partnering agreements, ombudsmen, and alternative disputes procedures;

(6) Use of self-assessment and benchmarking techniques to support continuous improvement in purchasing;

(7) Maintenance of the highest professional and ethical standards; and

(8) Maintenance of file documentation appropriate to the value of the purchase and which is adequate to establish the propriety of the transaction and the price paid.

§ 970.7106, 970.7107 [Removed]

7. Sections 970.7106, Procedures for handling mistakes relating to management and operating contractor purchases, and 970.7107, Protest of management and operating contractor procurements, are removed.

[FR Doc. 95–13432 Filed 6–1–95; 8:45 am]

BILLING CODE 6450–01–P

DEPARTMENT OF COMMERCE

National Oceanic and Atmospheric Administration

50 CFR Part 227

[Docket No.950201033–5136–02; I.D. 040395C]

RIN 0648–AG37

Sea Turtle Conservation; Shrimp Trawling Requirements; Turtle Excluder Device Exemption

AGENCY: National Marine Fisheries Service (NMFS), National Oceanic and Atmospheric Administration (NOAA), Commerce.

ACTION: Temporary rule.

SUMMARY: NMFS temporarily amends the regulations protecting sea turtles to allow compliance with tow-time limits as an alternative to the use of turtle excluder devices (TEDs) by shrimp trawlers in a 30–square mile (48.3–square km) area off the coast of North Carolina (North Carolina restricted area) through November 30, 1995. This area seasonally exhibits high concentrations of red and brown algae that make trawling with TEDs impracticable. Specific tow-time limits are required as follows: A 30–minute tow limit through August 15, 1995; a 55–minute tow limit from August 16 through October 31, 1995; and a 75–minute tow limit from November 1 through November 30, 1995. The purpose of this temporary rule is to allow shrimp trawlers to harvest shrimp efficiently during their traditional shrimping season (March through November) and maintain adequate protection for sea turtles in this area.

EFFECTIVE DATE: Effective from May 30, 1995 through November 30, 1995.

ADDRESSES: Copies of the environmental assessment (EA) prepared for this temporary rule may be obtained from the Chief, Endangered Species Division, Office of Protected Resources, NMFS, 1315 East-West Highway, Silver Spring, MD 20910. Comments on the collection-of-information requirement subject to the Paperwork Reduction Act should be directed to the Chief, Endangered Species Division, Office of Protected Resources, NMFS, 1315 East-West Highway, Silver Spring, MD 20910; and to the Office of Information and Regulatory Affairs of Office of Management and Budget (OMB), Washington, DC 20503, Attention: Desk Officer for NOAA.

FOR FURTHER INFORMATION CONTACT: Russell J. Bellmer, (301) 713–1401, or Charles A. Oravetz, (813) 570–5312.

SUPPLEMENTARY INFORMATION:

Background

All sea turtles that occur in U.S. waters are listed as either endangered or threatened under the Endangered Species Act of 1973 (ESA), 16 U.S.C. 1531 *et seq*. Incidental capture by trawlers has been documented for five species of sea turtles that occur in offshore waters of North Carolina. Sea turtle conservation regulations at 50 CFR parts 217 and 227 require all shrimp trawlers, regardless of length, in inshore and offshore waters of the Atlantic area, including off North Carolina, to have an approved TED installed year-round in each net rigged for fishing, unless specifically exempted.

Pursuant to the regulations at 50 CFR 227.72(e)(3)(ii), NMFS has promulgated 30-day exemptions to allow shrimpers in a certain area off North Carolina,

defined at 50 CFR 217.12 as the North Carolina restricted area, to limit tow times, rather than use TEDs, due to the presence of algae that makes trawling with TED-equipped nets impracticable. A comprehensive list of cites relating to these actions is as follows: 57 FR 33452, July 29, 1992; 57 FR 40859, September 8, 1992; 57 FR 45986, October 6, 1992; 57 FR 52735, November 5, 1992; 57 FR 57968, December 8, 1992; 58 FR 19631, April 15, 1993; 58 FR 28793, May 17, 1993; 58 FR 33219, June 16, 1993; 58 FR 38537, July 19, 1993; 58 FR 43820, August 18, 1993.

In addition to these 30-day exemptions, NMFS proposed a permanent exemption on May 25, 1993 (58 FR 30007), which contained a discussion of special environmental conditions, an assessment of the algae problem, a history of the local fishery, and of tow times. Comments received on the proposed rule were addressed in an interim final rule extending the tow-time allowance through November 30, 1993 (58 FR 48975, September 21, 1993). No comments were received on the interim final rule. A final rule (59 FR 33697, June 30, 1994) was issued allowing tow-time limits through November 30, 1994. That final rule with a sunset was issued instead of a permanent final rule because NMFS decided that future exemptions should be provided through an incidental take permit under section 10(a) of the ESA. The rationale is included in the cited **Federal Register** publication and is not repeated here. No comments were received on the final rule.

The present temporary rule provides an exemption to the TED requirement through November 30, 1995. This temporary rule will allow the harvest of shrimp in the North Carolina restriction area while providing protection of sea turtles until an incidental take permit under section 10(a) of the ESA can be processed. On February 16, 1995 (60 FR 8956), NMFS authorized non-Federal entities to apply for permits for the incidental take of threatened species. An incidental take permit would enable a state to develop its own conservation plan, including funding, monitoring and enforcement of activities under the permit and the plan. North Carolina has indicated its intent to apply for an incidental take permit in connection with shrimp fishing in the North Carolina restricted area, thus this exemption is promulgated on a temporary rather than a permanent basis. Any review of an application for an incidental take permit and any issuance of such a permit will comply with section 10 of the Act and its implementing regulations at 50 CFR parts 217 and 222. As a matter of policy, NMFS does not intend to promulgate a rule providing this exemption in the future. Rather, NMFS believes future exemptions should be provided through an incidental take permit issued pursuant to section 10(a) of the ESA.

NMFS' review of vessels operating in the North Carolina restricted area for the 1993–94 season indicates that sea turtle mortalities do not appear to be associated with the authorization of tow times in lieu of TEDs. NMFS has reached this conclusion based on the low number of takes documented by observers (two turtles caught alive and released), the observed compliance with tow-time restrictions, the cooperation of the fishermen, the small number of participants in the fishery, and the local knowledge required to trawl in the restricted area without losing gear on bottom obstructions (which effectively limits entry into the fishery). These factors are discussed in previous actions promulgated by NMFS, including the proposed rule (see above citations). However, NMFS is concerned about possible interactions between shrimping operations and turtles during the turtle nesting season. NMFS will continue to monitor this situation during the remainder of the 1995 shrimping season.

Based on information received during the 1993–94 season, as in previous years, NMFS has determined that algal concentrations may be characteristic of the restricted area or may recur in an intermittent or unpredictable pattern and, thus, render TED-use impracticable. NMFS will continue to monitor algal concentrations to determine whether these concentrations are consistently problematic or whether there are times or seasons when TEDs could be used. Shrimp trawling observed out of Sneads Ferry, NC, on April 28, 1994, confirmed the presence of algal concentrations sufficient to clog 3 of 4 TEDs used in the observed tows. On June 23, 1994, algae concentrations were high enough to partially clog 3 of 4 TEDs. The fourth TED was completely clogged, and an unidentified sea turtle of medium size was pinned in front of the TED. The turtle appeared lively and swam away. The tow time was 56 minutes.

This temporary rule makes effective for the remainder of the traditional shrimping season, through November 30, 1995, the policies and procedures of the rule promulgated last year. Specifically, under this temporary rule, tow times in the North Carolina restricted area are limited to 30 minutes through August 15; 55 minutes from August 16 through October 31; and 75 minutes from November 1 through November 30, 1995. These measures should not, in the long run, significantly impact fishermen's normal trawl times, since heavy algae concentrations characteristic of the warmer months cause fishermen to voluntarily shorten tow times to approximately 15–30 minutes. When algal concentrations are light, shrimpers should use TEDs.

Under this temporary rule, owners and operators of shrimp vessels must register with the Director, Southeast Region, NMFS (Regional Director), before fishing in the restricted area, and vessels using the tow-time alternative are required to carry a NMFS-approved observer if requested to do so by the Regional Director. The observer will monitor compliance with required conservation measures, including restricted tow times, and resuscitation of any captured turtles in accordance with 50 CFR 227.72(e)(1)(i). Data collected by observers may be used for enforcement purposes. Violations of tow-time restrictions documented by North Carolina enforcement officers may be prosecuted under the ESA by the Office of the General Counsel, NMFS, Southeast Region. In addition, violators may face prosecution under state law. NMFS and North Carolina Division of Marine Fisheries will jointly monitor compliance with the tow-time alternative.

Additional Sea Turtle Conservation Measures

Pursuant to the provisions of 50 CFR 227.72(e)(3) and (6), the Assistant Administrator for Fisheries, NOAA (AA) may modify the required conservation measures by publishing notification in the **Federal Register**, if necessary, to ensure adequate protection of endangered and threatened sea turtles. Under this procedure, the AA would impose any necessary additional or more stringent measures, including more restrictive tow times, synchronized tow times, or termination of the tow-time alternative, if the AA determines that: (1) The concentration of algae no longer makes trawling with TEDs impracticable; (2) there is insufficient compliance with the required conservation measures; (3) compliance cannot be monitored effectively; (4) significant or unanticipated levels of lethal or nonlethal takings or strandings of sea turtles have occurred in or near the North Carolina restricted area; (5) shrimp trawlers are having a significant adverse effect on sea turtles in the exemption area; or (6) the incidental take level, authorized by the biological opinion, of one mortality of Kemp's

ridley, green, hawksbill, or leatherback turtles, or two mortalities of loggerhead turtles attributable to shrimp fishing in the North Carolina restricted area is met or exceeded during the exemption period.

Classification

The AA has determined that this temporary rule is consistent with the ESA and other applicable law and is not significant for purposes of E.O. 12866.

Pursuant to section 553(b)(B) of the Administrative Procedure Act (APA), the AA finds there is good cause to waive prior notice and opportunity to comment on this temporary rule. It is unnecessary to provide prior notice and opportunity for comment because NMFS has provided public notice and opportunity for comment on the same rule promulgated last year. Those comments were addressed in the publication of the final rule last year, which is identical to this temporary rule, and the AA finds that it is unnecessary to seek additional comments on the same rule again this year.

Because this rule relieves a restriction, under section 553(d) of the APA a 30-day delay in effective date is not required.

An EA prepared for this temporary rule concludes that this action will have no significant impact on the human environment. A copy of the EA is available (see **ADDRESSES**).

This rule contains a collection-of-information requirement subject to the Paperwork Reduction Act, namely, registration to trawl in the North Carolina restricted area. This collection of information has been approved by the OMB under OMB control number 0648–0267. The public reporting burden for this collection of information is estimated to average 7 minutes per response, including the time for reviewing instructions, searching existing data sources, gathering and maintaining the data needed, and completing and reviewing the collection of information. Comments regarding this burden estimate or any other aspect of this collection of information, including suggestions for reducing the burden, may be sent to NMFS or OMB (see **ADDRESSES**).

List of Subjects in 50 CFR Part 227

Endangered and threatened species, Exports, Imports, Marine mammals, Transportation.

Dated: May 25, 1995.

Richard H. Schaefer,

Acting Assistant Administrator for Fisheries, National Marine Fisheries Service.

For the reasons set out in the preamble, 50 CFR part 227 is amended as follows:

PART 227—THREATENED FISH AND WILDLIFE

1. The authority citation for part 227 continues to read as follows:

Authority: 16 U.S.C. 1531 *et seq.*

2. In § 227.72, paragraph (e)(3)(ii)(B) is temporarily suspended and paragraph (e)(3)(ii)(C) is temporarily added to read as follows:

§ 227.72 Exceptions to prohibitions.

* * * * *

(e) * * *

(3) * * *

(ii) * * *

(C) *North Carolina restricted area.* From May 30, 1995, through November 30, 1995, a shrimp trawler in the North Carolina restricted area, as an alternative to complying with the TED requirement of paragraph (e)(2)(i) of this section, may comply with the tow-time restrictions set forth in paragraph (e)(3)(i) of this section. The owner or operator of a shrimp trawler who wishes to fish in the North Carolina restricted area must register pursuant to paragraph (e)(3)(v) of this section, with registration received by the Director, Southeast Region, NMFS, at least 24 hours before the first use of tow times set forth in paragraph (e)(3)(i) of this section. Registration may be made by telephoning (813) 570–5312 or writing to 9721 Executive Center Drive, St. Petersburg, FL 33702. The owner or operator of a shrimp trawler in the North Carolina restricted area must carry aboard a NMFS-approved observer upon written notification by the Director, Southeast Region, NMFS. Notification shall be made to the address specified for the vessel in either NMFS or state fishing permit application, the registration or documentation papers, or otherwise served upon the owner or operator of the vessel. The owner or operator must comply with the terms and conditions specified in such written notification. All observers will report any violations of this section, or other applicable regulations and laws; such information may be used for enforcement purposes.

* * * * *

[FR Doc. 95–13512 Filed 5–30–95; 4:03 pm]

BILLING CODE 3510–22–F

Proposed Rules

Federal Register
Vol. 60, No. 106
Friday, June 2, 1995

This section of the FEDERAL REGISTER contains notices to the public of the proposed issuance of rules and regulations. The purpose of these notices is to give interested persons an opportunity to participate in the rule making prior to the adoption of the final rules.

DEPARTMENT OF AGRICULTURE

Agricultural Marketing Service

7 CFR Part 984

[Docket No. FV95–984–1PR]

Walnuts Grown in California; Suspension of Deadline for Relaxing Reserve Requirements

AGENCY: Agricultural Marketing Service, USDA.

ACTION: Proposed suspension.

SUMMARY: This proposal would suspend the deadline by which the Walnut Marketing Board (Board) may recommend a relaxation in reserve requirements established for a marketing year under the walnut marketing order. Suspension of the deadline would allow the Board, which locally administers the order, to make such a decision based on more current supply and shipment information. This suspension would provide the walnut industry an opportunity for more orderly marketing.

DATES: Comments must be received by July 3, 1995.

ADDRESSES: Interested persons are invited to submit written comments concerning this proposal. Comments must be sent in triplicate to the Docket Clerk, Marketing Order Administration Branch, F&V, AMS, USDA, room 2523–S, P.O. Box 96456, Washington, D.C. 20090–6456, FAX number (202) 720–5698. Comments should reference this docket number and the date and page number of this issue of the **Federal Register** and will be available for public inspection in the Office of the Docket Clerk during regular business hours.

FOR FURTHER INFORMATION CONTACT: Mark Hessel, Marketing Specialist, California Marketing Field Office, Fruit and Vegetable Division, AMS, USDA, 2202 Monterey Street, suite 102B, Fresno, California 93721; telephone: (209) 487–5901, or FAX (209) 487–5906; or Mark Kreaggor, Marketing Specialist, Marketing Order Administration Branch, F&V, AMS, USDA, room 2523–S, P.O. Box 96456, Washington, D.C. 20050–6456; telephone: (202) 720–3610, or FAX (202) 720–5698.

SUPPLEMENTARY INFORMATION: This proposal is issued under Marketing Agreement and Order No. 984 (7 CFR part 984), regulating the handling of walnuts grown in California. The order is effective under the Agricultural Marketing Agreement Act of 1937, as amended, (7 U.S.C. 601–674), hereinafter referred to as the ''Act.''

The Department of Agriculture (Department) is issuing this rule in conformance with Executive Order 12866.

This proposal has been reviewed under Executive Order 12778, Civil Justice Reform. This rule is not intended to have retroactive effect. This proposal would not preempt any State or local laws, regulations, or policies, unless they present an irreconcilable conflict with this rule.

The Act provides that administrative proceedings must be exhausted before parties may file suit in court. Under section 608c(15)(A) of the Act, any handler subject to an order may file with the Secretary a petition stating that the order, any provision of the order, or any obligation imposed in connection with the order is not in accordance with law and requesting a modification of the order or to be exempted therefrom. A handler is afforded the opportunity for a hearing on the petition. After a hearing the Secretary would rule on the petition. The Act provides that the district court of the United States in any district in which the handler is an inhabitant, or has his or her principal place of business, has jurisdiction in equity to review the Secretary's ruling on the petition, provided a bill in equity is filed not later than 20 days after the date of the entry of the ruling.

Pursuant to requirements set forth in the Regulatory Flexibility Act (RFA), the Administrator of the Agricultural Marketing Service (AMS) has considered the economic impact of this action on small entities.

The purpose of the RFA is to fit regulatory actions to the scale of business subject to such actions in order that small businesses will not be unduly or disproportionately burdened. Marketing orders issued pursuant to the Act, and rules issued thereunder, are unique in that they are brought about through group action of essentially small entities acting on their own behalf. Thus, both statutes have small entity orientation and compatibility.

There are approximately 65 handlers of California walnuts who are subject to regulation under the walnut marketing order, and approximately 5,000 producers in the regulated area. Small agricultural service firms have been defined by the Small Business Administration (13 CFR 121.601) as those whose annual receipts are less than $5,000,000 and small agricultural producers have been defined as those having annual receipts of less than $500,000. The majority of California walnut handlers and producers may be classified as small entities.

The walnut marketing order provides authority for volume control in the form of free, reserve, and export percentages. The free percentage is the percentage of certified merchantable walnuts that may be shipped freely to any market during the marketing year. The reserve percentage is the amount of certified merchantable walnuts that may be shipped to export markets, government agencies, charitable institutions, poultry or animal feed, walnut oil, or other markets noncompetitive with markets for certified merchantable free walnuts. The export percentage is the percentage of reserve walnuts that may be shipped to export markets. Certified merchantable walnuts are walnuts which have been inspected and certified by the Dried Fruit Association of California as meeting the minimum grade and size requirements specified under the order.

The marketing order also provides that handlers may meet their reserve requirements by either delivering reserve walnuts to the Board for disposition by the Board or by selling or disposing of their own walnuts, as agents of the Board, in specified reserve outlets. Any reserve walnuts the Board receives would be pooled and sold by the Board in markets specified for reserve walnuts at the highest returns available. The proceeds from the sale of these pooled walnuts, minus all expenses incurred by the Board in receiving, holding, and disposing of the walnuts, would be distributed to handlers who delivered walnuts to the pool in proportion to each handler's contribution.

In a marketing year (August 1–July 31) that a reserve program is implemented, the Board recommends the initial percentages in September and has the option of recommending an increase in the free and export percentages and a decrease in the reserve percentage later in the marketing year. If the Department concurs with the Board's recommendation, the recommended percentages may be established or modified. Under current order requirements, the reserve percentage may be decreased and free percentage increased if the Board makes a recommendation on or before February 15. Section 984.49(b)(1) establishes a deadline of February 15 for the Board to recommend to the Secretary an increase in the free percentage and a decrease in the reserve percentage. On February 10, 1995, the Board unanimously recommended suspension of that deadline. The proposed rule would suspend the phrase ''On or before February 15 of the marketing year,'' in section 984.49(b)(1) and would authorize the Board to recommend an increase in the free percentage and a decrease in the reserve percentage at any time during the marketing year, which ends on July 31.

In the past, many export markets were undeveloped and the domestic market provided better returns than export markets. The reserve percentage was used as a tool to keep the domestic walnut market from being oversupplied and the export percentage was used as a tool to place an orderly flow of California walnuts into the export market at prices that were competitive with foreign walnuts. Even though the free walnuts were allowed to be shipped to export markets, free walnuts were not price competitive with walnuts from other countries and consequently were not diverted to export markets. Under former marketing conditions, sufficient information relating to the domestic market was available prior to February 15 so that the Board could make an appropriate recommendation for final free and reserve percentages.

Under present marketing conditions, walnut export markets are well established and have returns equal to or higher than those received in the domestic market. As a result, the Board could recommend setting an export percentage of 0 percent which would preclude the shipment of reserve walnuts to export markets. The export market would then be supplied with only free walnuts. By setting a reserve percentage and keeping the export percentage at 0 percent, the Board could remove a quantity of walnuts in excess of domestic and export market demands.

When large shipments of reserve walnuts were exported, the February 15 deadline for recommending a decrease in the reserve gave handlers approximately five months to export the remainder of their reserve after the final reserve percentage was known. Since exports have now become a viable market for free walnuts, the Board may need more flexibility to consider later data on free shipments to revise its estimate of trade demand. The Board may also need more flexibility to consider the July forecast of the next crop to decide if the desirable carryout should be increased to supplement a short crop.

In addition, the order requires handlers to file monthly shipment reports that are due on the fifth day of the following month. Each additional monthly report the Board receives from handlers after the February 15 deadline, gives the Board a more accurate picture of the levels of shipments of walnuts for the current marketing year. More information is also available at that time on the foreign walnut crop, the pecan supply which directly, competes with walnuts, exchange rates, and foreign and domestic economic conditions. This information would allow the Board to better estimate the current and prospective domestic and export demand and supply conditions for California walnuts. Finally, later in the marketing year, the Board can better estimate the amount of the current crop of walnuts that should be carried over to the next marketing year. By allowing decisions to be made later in the season on a reserve program, the industry can better evaluate marketing conditions.

The Board estimates that sufficient information would be available by early June, but marketing conditions may cause the Board to wait longer before making a final recommendation on the free and reserve percentages. The suspension of the February 15 deadline would allow the Board more flexibility in dealing with the dynamic marketing conditions of the California walnut industry and in turn provide for more orderly marketing of walnuts.

Based on available information, the Administrator of the AMS has determined that this action would not have a significant economic impact on a substantial number of small entities.

A 30-day comment period is provided to allow interested persons an opportunity to comment on this proposal. All written comments timely received will be considered before a final determination is made on this matter.

List of Subjects in 7 CFR Part 984

Marketing agreements, Nuts, Reporting and recordkeeping requirements, Walnuts.

For the reasons set forth in the preamble, 7 CFR part 984 is proposed to be suspended in part as follows:

PART 984—WALNUTS GROWN IN CALIFORNIA

1. The authority citation for 7 CFR part 984 continues to read as follows:

Authority: 7 U.S.C. 601–674.

§ 984.49 [Suspended in part]

2. In § 984.49(b)(1), the words ''On or before February 15 of the marketing year,'' are suspended.

Dated: May 26, 1995.

Lon Hatamiya,

Administrator.

[FR Doc. 95–13509 Filed 6–1–95; 8:45 am]

BILLING CODE 3410–02–P

---

7 CFR Part 1126

[DA–95–16]

Milk in the Texas Marketing Area; Notice of Proposed Suspension of Certain Provisions of the Order

AGENCY: Agricultural Marketing Service, USDA.

ACTION: Proposed suspension of rule.

SUMMARY: This document invites written comments on a proposal that would continue the suspension of segments of the pool plant and producer milk definitions of the Texas order for a two-year period. Associated Milk Producers, Inc., a cooperative association that represents producers who supply milk to the market, has requested the continuation of the suspension. The cooperative asserts that continuation of this suspension is necessary to insure that dairy farmers who have historically supplied the Texas market will continue to have their milk priced under the Texas order without incurring costly and inefficient movements of milk.

DATES: Comments are due no later than July 3, 1995.

ADDRESSES: Comments (two copies) should be sent to USDA/AMS/Dairy Division, Order Formulation Branch, Room 2968, South Building, P.O. Box 96456, Washington, DC 20090–6456, (202) 720–9368.

FOR FURTHER INFORMATION CONTACT: Clifford M. Carman, Marketing Specialist, USDA/AMS/Dairy Division, Order Formulation Branch, Room 2968, South Building, P.O. Box 96456, Washington, DC 20090–6456, (202) 720–9368.

SUPPLEMENTARY INFORMATION: The Regulatory Flexibility Act (5 U.S.C. 601–612) requires the Agency to examine the impact of a proposed rule on small entities. Pursuant to 5 U.S.C. 605(b), the Administrator of the Agricultural Marketing Service has certified that this proposed rule would not have a significant economic impact on a substantial number of small entities. This rule would tend to ensure that dairy farmers will continue to have their milk priced under the order and thereby receive the benefits that accrue from such pricing.

The Department is issuing this proposed rule in conformance with Executive Order 12866.

This proposed suspension of rules has been reviewed under Executive Order 12778, Civil Justice Reform. This rule is not intended to have a retroactive effect. If adopted, this proposed rule will not preempt any state or local laws, regulations, or policies, unless they present an irreconcilable conflict with this rule.

The Agricultural Marketing Agreement Act of 1937, as amended (7 U.S.C. 601–674), provides that administrative proceedings must be exhausted before parties may file suit in court. Under section 608c(15)(A) of the Act, any handler subject to an order may file with the Secretary a petition stating that the order, any provision of the order, or any obligation imposed in connection with the order is not in accordance with the law and requesting a modification of an order or to be exempted from the order. A handler is afforded the opportunity for a hearing on the petition. After a hearing, the Secretary would rule on the petition. The Act provides that the district court of the United States in any district in which the handler is an inhabitant, or has its principal place of business, has jurisdiction in equity to review the Secretary's ruling on the petition, provided a bill in equity is filed not later than 20 days after date of the entry of the ruling.

Notice is hereby given that, pursuant to the provisions of the Act, the suspension of the following provisions of the order regulating the handling of milk in the Texas marketing area is being considered for the months of August 1, 1995, through July 31, 1997.

1. In § 1126.7(d) introductory text, the words ''during the months of February through July'' and the words ''under paragraph (b) or (c) of this section''.

2. In § 1126.7(e) introductory text, the words ''and 60 percent or more of the producer milk of members of the cooperative association (excluding such milk that is received at or diverted from pool plants described in paragraphs (b), (c), and (d) of this section) is physically received during the month in the form of a bulk fluid milk product at pool plants described in paragraph (a) of this section either directly from farms or by transfer from plants of the cooperative association for which pool plant status under this paragraph has been requested''.

3. In § 1126.13(e)(1), the words ''and further, during each of the months of September through January not less than 15 percent of the milk of such dairy farmer is physically received as producer milk at a pool plant''.

4. In § 1126.13, paragraph (e)(2).

5. In § 1126.13(e)(3), the sentence ''The total quantity of milk so diverted during the month shall not exceed one-third of the producer milk physically received at such pool plant during the month that is eligible to be diverted by the plant operator;''.

All persons who desire to submit written data, views or arguments about the proposed suspension should send two copies to USDA/AMS/Dairy Division, Order Formulation Branch, Room 2968, South Building, P.O. Box 96456, Washington, DC 20090–6456, by the 30th day after publication of this notice in the **Federal Register**.

All written submissions made pursuant to this notice will be made available for public inspection in the Dairy Division during regular business hours (7 CFR 1.27(b)).

Statement of Consideration

The proposed suspension would continue the current suspension of segments of the pool plant and producer milk definitions under the Texas order. This proposed suspension would be in effect from August 1995 through July 1997. The current suspension will expire July 31, 1995. The proposed action would continue the suspension of : (1) The 60 percent delivery standard for pool plants operated by cooperatives; (2) the diversion limitation applicable to cooperative associations; (3) the limits on the amount of milk that a pool plant operator may divert to nonpool plants; (4) the shipping standards that must be met by supply plants to be pooled under the order; and (5) the individual producer performance standards that must be met in order for a producer's milk to be eligible for diversion to a nonpool plant.

The order permits a cooperative association plant located in the marketing area to be a pool plant, if at least 60 percent of the producer milk of members of the cooperative association is physically received at pool distributing plants during the month. In addition, a cooperative association may divert to nonpool plants up to one-third of the amount of milk that the cooperative causes to be physically received during the month at handlers' pool plants. The order also provides that the operator of a pool plant may divert to nonpool plants not more than one-third of the milk that is physically received during the month at the handler's pool plant. The proposed action would continue to inactivate the 60 percent delivery standard for plants operated by a cooperative association and remove the diversion limitations applicable to a cooperative association and to the operator of a pool plant.

The order also provides for regulating a supply plant each month in which it ships a sufficient percentage of its receipts to distributing plants. The order provides for pooling a supply plant that ships 15 percent of its milk receipts during August and December and 50 percent of its receipts during September through November and January. A supply plant that is pooled during each of the immediately preceding months of September through January is pooled under the order during the following months of February through July without making qualifying shipments to distributing plants. The requested action would continue the current suspension of these performance standards for supply plants that were regulated under the Texas order during each of the immediately preceding months of September through January.

The order also specifies that the milk of each producer must be physically received at a pool plant in order to be eligible for diversion to a nonpool plant. During the months of September through January, 15 percent of a producer's milk must be received at a pool plant for diversion eligibility. The proposed action would continue to suspend these requirements.

The continuation of the current suspension was requested by Associated Milk Producers, Inc., a cooperative association that represents a substantial number of dairy farmers who supply the Texas market. The cooperative stated that marketing conditions have not changed since the provisions were suspended in 1993 or since March 1995 when the suspension was expanded to include all of paragraph (e)(2), and therefore should be continued until restructuring of the order can be achieved through the formal rulemaking process.

The cooperative states that the continuation of the current suspension is necessary to insure that dairy farmers who have historically supplied the

Texas market will continue to have their milk priced under the Texas order. In addition they maintain that the suspension would continue to provide handlers the flexibility needed to move milk supplies in the most efficient manner and to eliminate costly and inefficient movements of milk that would be made solely for the purpose of pooling the milk of dairy farmers who have historically supplied the market.

List of Subjects in 7 CFR Part 1126

Milk marketing orders.

The authority citation for 7 CFR Part 1126 continues to read as follows:

Authority: 7 U.S.C. 601–674.

Dated: May 26, 1995.

Lon Hatamiya,

Administrator.

[FR Doc. 95–13510 Filed 6–1–95; 8:45 am]

BILLING CODE 3410–02–P

---

7 CFR Part 1280

[No. LS–94–015]

Sheep and Wool Promotion, Research, Education, and Information Order

AGENCY: Agricultural Marketing Service, USDA.

ACTION: Proposed rule.

SUMMARY: The Sheep Promotion, Research, and Information Act of 1994 (Act), authorized the establishment of a national, industry-funded and -operated sheep and wool promotion, research, education, and information program. In response to an invitation published in the **Federal Register** to submit proposals for a sheep and wool promotion, research, education, and information order (Order), the Agricultural Marketing Service (AMS) received an entire industry proposal as well as five other partial proposals. With minor modifications, the full industry proposal and four of the partial proposals are set forth below for public comment. All comments will be considered before we issue a final rule establishing an Order.

Before an Order can become operational, a referendum must be conducted among sheep producers, sheep feeders, and importers of sheep and sheep products, except importers of raw wool. If sheep producers, feeders, and importers voting in the referendum approve the final Order, producers, feeders, and importers will be required to pay assessments, which would be used in a national program of sheep and wool promotion, research, consumer information, education, industry information, and producer information.

This rule also contains the certification and nomination procedures for the establishment of the National Sheep Promotion, Research, and Information Board (Board).

Additionally, please take notice that a public meeting will be held during the comment period to foster a better understanding of the intent and application of the proposed Order. The Secretary of Agriculture (Secretary) will consider the record of that meeting in the development of a final Order. All interested persons are invited to attend.

DATES: Written comments must be received by July 17, 1995. The meeting will convene at 9:00 a.m., eastern daylight time, on June 26, 1995.

ADDRESSES: Location of meeting: Room 3501, USDA South Building, 14th and Independence Avenue, SW., Washington, D.C.

COMMENTS: Send two copies of comments to Ralph L. Tapp, Chief; Marketing Programs Branch, Room 2606–S; Livestock and Seed Division, AMS-USDA; P.O. Box 96456; Washington, D.C. 20090–6456. Comments will be available for public inspection during regular business hours in Room 2606, South Building, 14th and Independence Avenue, SW., Washington, D.C. 20250. All comments should reference the docket number and the date and page number of the issue of the **Federal Register**. Comments concerning the information collection requirements contained in this proposal should also be sent to the Office of Information and Regulatory Affairs; Office of Management and Budget (OMB); Washington, D.C. 20503. Attention: Desk Officer for Agricultural Marketing Service, USDA.

FOR FURTHER INFORMATION CONTACT: Ralph L. Tapp, Chief, Marketing Programs Branch, 202/720–1115.

SUPPLEMENTARY INFORMATION: Prior documents in this proceeding: Invitation to submit proposals—60 FR 381 (January 4, 1995).

Regulatory Impact Analysis

Executive Orders 12866 and 12778 and the Regulatory Flexibility Act

This proposed rule has been determined to be not significant for purposes of Executive Order 12866 and therefore has not been reviewed by OMB.

This proposed rule has been reviewed under Executive Order 12778, Civil Justice Reform. It is not intended to have a retroactive effect. This rule would not preempt any State or local laws, regulations, or policies unless they present an irreconcilable conflict with this rule.

The Act provides that any person subject to the Order may file with the Secretary a petition stating that the Order, any provision of the Order, or any obligation imposed in connection with the Order is not in accordance with the law, and requesting a modification of the Order or an exemption from certain provisions or obligations of the Order. The petitioner will have the opportunity for a hearing on the petition. Thereafter the Secretary will issue a decision on the petition. The Act provides that the district courts of the United States in any district in which the petitioner resides or carries on business has jurisdiction to review a ruling on the petition, if the petitioner files a complaint for that purpose not later than 20 days after the date of the entry of the Secretary's decision. The petitioner must exhaust his administrative remedies before he can initiate any such proceeding in the district court.

Pursuant to requirements set forth in the Regulatory Flexibility Act (RFA)(5 U.S.C. 601 et seq.), the Administrator of AMS has considered the economic impact of this proposed action on small entities.

The purpose of RFA is to fit regulatory actions to the scale of businesses subject to such actions in order that small businesses will not be unduly or disproportionately burdened.

According to the January 27, 1995, issue of ''Sheep and Goats,'' published by the U.S. Department of Agriculture's (Department) National Agricultural Statistics Service, there are approximately 87,350 operations with sheep in the United States, nearly all of which would be classified as small businesses under the criteria established by the Small Business Administration (13 CFR 121.601).

The proposed Order would require each person who makes payment to a sheep producer, feeder, or handler of sheep or sheep products to be a collecting person, and thus to collect the assessment from the sheep producer, feeder, or handler of sheep or sheep products. Any person who buys domestic live sheep or greasy wool for processing must collect and remit the assessment to the Board. Each person who processes or causes to be processed sheep or sheep products of that person's own production and markets the processed products will pay an assessment and remit the assessment to the Board. Any person who exports live sheep or greasy wool will be required to remit an assessment to the Board. Finally, each person who imports into the United States sheep, sheep products, wool, or products containing wool,

other than raw wool, will pay an assessment. The U.S. Customs Service (Customs Service) will collect the assessments on imported sheep and sheep products (except raw wool) and forward them to AMS for disbursement to the Board.

The rate of assessment on domestic sheep producers, feeders, and exporters of live sheep and greasy wool will be 1-cent-per-pound on live sheep sold and 2-cents-per-pound on greasy wool sold. Importers will be assessed 1-cent-per-pound on live sheep and the equivalent of 1-cent-per-pound of live sheep for sheep products as well as 2-cents-per-pound of degreased wool or the equivalent of degreased wool for wool and wool products. Imported raw wool will be exempt from assessments. Each person who processes or causes to be processed sheep or sheep products of that person's own production and markets the processed products will be assessed the equivalent of 1-cent-per-pound of live sheep sold or 2-cents-per-pound of greasy wool sold. All assessment rates may be adjusted in accordance with the applicable provisions of the Act.

Although the assessments are expected to total about $14 million dollars annually, the economic impact of assessments collected from sheep producers, feeders, handlers, exporters, importers, or direct processors, will not be significant. The proposed Order also imposes a reporting and recordkeeping burden on (1) each collecting person, including processors and other persons required to remit assessments to the Board on live sheep or wool purchased from the producer, feeder, or handler, (2) each person marketing sheep products of that person's own production, (3) each exporter of sheep or greasy wool, and (4) each person importing sheep or sheep products, other than raw wool. This burden should average less than 5 hours per year, so its economic impact will not be significant. In addition, the sheep and wool promotion, research, education, and information program funded by the assessments is expected to benefit each person paying into the program by expanding and maintaining new and existing domestic and foreign markets and uses for sheep and sheep products and wool and products containing wool. Therefore, the Administrator of AMS has determined that this action will not have a significant economic impact on a substantial number of small entities.

This proposal also contains the certification and nomination procedures for the establishment of the Board. The Board will be appointed by the Secretary.

Comments and Public Meeting

Interested persons are invited to submit written comments concerning this proposed Order. Comments must be sent to the Livestock and Seed Division's Marketing Programs Branch and must refer to the date and page number of this issue of the **Federal Register**. Comments submitted pursuant to this document will be made available for public inspection during regular business hours. Comments must be received by July 17, 1995.

Additionally, notice is given that a public meeting will be held beginning at 9:00 a.m., eastern daylight time, on June 26, 1995, at the U.S. Department of Agriculture, Room 3501, South Building, 14th and Independence Avenue, SW., Washington, D.C.

The meeting will be conducted by a presiding officer chosen by the Department. The proceedings of such meeting will be transcribed and considered in the development of a final Order. The purpose of the meeting is to provide an opportunity for a full discussion on the proposal to foster a better understanding of the intent and application of the proposed Order. Interested persons may present data, views, or arguments concerning the proposed Order through exhibits, written statements, or oral presentations. We encourage persons who make oral presentations to submit their presentations in writing as well. Those who submit written statements must provide one original and three copies of the statement for the record. Persons who attend the meeting will be allowed to question participants who give oral presentations. We anticipate that the proponents of this proposal will attend the meeting and will answer questions about the proposal.

Any interested person shall have an opportunity to appear and be heard concerning the proposed Order. However, the presiding officer may limit the number of times and the amount of time that any one person may be heard and may exclude information that is immaterial, irrelevant, or unduly repetitious, in order to limit the amount of cumulative material presented and to avoid prolonging the meeting unnecessarily.

Copies of the transcript of the meeting will not be available for distribution through the Hearing Clerk's office. However, the transcript will be available for public inspection during normal business hours. Anyone who would like to buy a copy of the transcript should make arrangements with the reporter at the meeting.

Paperwork Reduction

In accordance with the Paperwork Reduction Act of 1980 (44 U.S.C. Chapter 35), the information collection requirements contained in this action will be submitted to OMB for approval. This action sets forth the provisions for establishing a nationwide, industry-funded sheep and wool promotion, research, education, and information program. Information collection requirements as required by this action are necessary for the implementation of this Order include:

(1) A report by each collecting person, including processors and other persons required to remit assessments to the Board for live sheep or wool purchased from the producer, feeder, or handler of sheep or sheep products and by each person marketing sheep or sheep products of that person's own production and by each exporter of sheep or greasy wool. The estimated number of respondents for this report is 700. Each respondent will submit one report per month, unless otherwise prescribed by the Board, and the estimated average reporting burden is 0.5 hours per response;

(2) A referendum ballot and registration form/envelope, or absentee ballot and registration form, to be completed by producers, feeders, and importers voting in an up-front referendum. The estimated number of respondents for this is approximately 25,000, (each of whom will submit one response) and the estimated average reporting burden is 0.10 hours per response;

(3) A nomination form by which certified organizations would nominate producers, feeders, and importers for membership on the Board. The estimated number of respondents for this form is 60 for the first year of the Order, and 20 each year thereafter. Each respondent will submit one response per year, and the estimated average reporting burden is 0.5 hours per response;

(4) An advisory committee membership background information form to be completed by candidates nominated by certified organizations for appointment to the Board. The estimated number of respondents for this form is 240 during the first year of the Order, and 80 each year thereafter. Each respondent will submit one response per year, and the estimated average reporting burden is 0.5 hours per response;

(5) An application for certification of organization to be completed by eligible organizations that request certification in order to be eligible to nominate

producers, feeders, and importers to the Board. The estimated number of respondents for this form is 70 (with each submitting one response), and the estimated average reporting burden is 0.5 hour per response; and

(6) A requirement to maintain sufficient records to verify reports submitted under the Order. The estimated number of recordkeepers needed to comply with this requirement is 700, each of whom will have an estimated annual reporting burden of 0.5 hours.

Comments concerning the information collection requirements contained in this action should also be sent to the Office of Information and Regulatory Affairs; Office of Management and Budget; Washington, D.C. 20503. Attention: Desk Officer for Agricultural Marketing Service, USDA.

Background

The Act (7 U.S.C. 7101–7111), approved October 22, 1994, authorizes the Secretary to establish a national sheep and wool promotion, research, education, and information program. The program will be funded by a mandatory assessment on domestic sheep producers, sheep feeders, and exporters of live sheep and greasy wool of 1-cent-per-pound on live sheep sold and 2-cents- per-pound on greasy wool sold. Importers will be assessed

1-cent-per-pound on live sheep imported and the equivalent of 1-cent-per-pound of live sheep for sheep products imported as well as 2-cents-per-pound of degreased wool or the equivalent of degreased wool for wool and wool products imported. Imported raw wool will be exempt from assessments. Each person who processes or causes to be processed sheep or sheep products of that person's own production, and who markets the processed products, will be assessed the equivalent of 1-cent-per-pound of live sheep sold or 2-cents-per-pound of greasy wool sold. All assessment rates may be adjusted in accordance with applicable provisions of the Act.

The Act provides for submission of proposals for a sheep and wool promotion, research, education, and information order (Order). The Secretary may propose the issuance of an Order, or an association of sheep producers may request the issuance of, and submit a proposed Order. The Act provides that when the Secretary decides to propose an Order or receives a request and proposal for an Order, the Secretary shall publish the proposed Order and give due notice and opportunity for public comment.

The Department issued an invitation to submit proposals for an initial Order in the January 4, 1995, issue of the **Federal Register**.

In response to the invitation to submit proposals, the American Sheep Industry Association (ASI), the sheep industry's producer member organization, submitted a proposed Order. In addition, the New Zealand Meat Producers Board, the Australian Meat and Live-stock Corporation, the Wools of New Zealand, the National Lamb Feeders Association, and the Lamb Committee of the National Livestock and Meat Board each submitted a partial proposal.

The Department has also received letters from other interested parties. The Department did not consider these letters to be proposals because they primarily addressed information relating to sections already established under Act, and were therefore not proposals to the proposed program. Copies of these and the comments received in response to this proposed Order, will be available for public inspection.

The Department is publishing ASI's proposal as Proposal I, the New Zealand Meat Producers Board's proposal as Proposal II, the Australian Meat and Live-stock Corporation's proposal as Proposal III, the Wools of New Zealand's proposal as Proposal IV, and the National Lamb Feeders Association's proposal as Proposal V. The Department has modified these proposals slightly in order to (1) make them consistent with the Act and other similar national research and promotion programs supervised by the Department, (2) simplify the language and format of some provisions, and (3) add certain sections necessary for proper administration of the Order by the Department. The Department rejected the proposal submitted by the Lamb Committee of the National Livestock and Meat Board and the proposal and its rejection are discussed below.

Proposal I

The proposed Order submitted by ASI is summarized as follows:

Sections 1280.101–1280.136 of the proposal define certain words that are used in the Order.

Sections 1280.201–1280.215 concern the establishment, membership, nominations, method of obtaining nominations, certification of organizations, term of office, compensation, removal, and powers and duties of the Board, which is the governing body authorized to administer the Order subject to the oversight of the Secretary. These sections also include provisions for: (1) Budget review and approval, (2) the maintenance of books and records by the Board, (3) the investment of funds, and (4) the use of assessments, including reimbursement for expenses incurred for the Department's oversight responsibilities.

Sections 1280.216–1280.222 of the proposed Order establishes that the membership of the Executive Committee is comprised of 14 members, including 7 producer members elected from 7 regions reflecting sheep production and sheep producers, 1 sheep feeder, 3 importers of sheep or sheep products, and 3 elected officers of the Board. In addition, these sections authorize the Executive Committee to develop plans and projects of promotion, research, consumer information, education, industry information, and producer information with respect to sheep and sheep products and to develop and submit to the Board budgets of anticipated expenses and disbursements for program projects. The Secretary must approve such plans, projects, or budgets before they are implemented.

Section 1280.223 makes the Board responsible for expenses of the Board and the Executive Committee, as well as for contracts and agreements that the Board enters into.

Sections 1280.224–1280.228 establishes assessment rates on sheep and sheep products as provided by the Act.

Section 1280.229 authorizes each Qualified State Sheep Board (QSSB) to receive 20 percent of the total assessments collected by the Board on the marketing of domestic sheep and domestic sheep products in any one year from each State. However, no QSSB would receive less than $2,500 per year.

Section 1280.230 establishes collection procedures for each person responsible for collecting the assessment, fixes a 2 percent late payment charge for past due assessments, and authorizes the Secretary to receive assessments on behalf of the Board, if the Board is not in place or is otherwise unable to collect assessments. This section also authorizes the Secretary to promulgate rules and regulations concerning assessments and the collection of assessments.

Section 1280.231 prohibits funds received under this program from being used to influence Government action or policy, with certain specified exceptions. In addition, funds received under this program that are used to conduct plans or projects shall not (1) make false or misleading claims on behalf of sheep or sheep products or

against a competing product or (2) promote or advertise any sheep or sheep products by brand or trade name without the approval of the Board and the concurrence of the Secretary.

Sections 1280.232–1280.235 contain reporting and recordkeeping requirements for persons subject to the Order, and provide that all information obtained by the Board or the Department from books and reports required by the Order would be kept confidential. In addition, they provide for a $1,000 penalty or imprisonment for not more than 1 year, or both, for any willful violation of the Order.

Sections 1280.240–1280.246 contain miscellaneous provisions, including provisions concerning the Secretary's authority; proceedings after the termination of the Order; the effect of termination or amendment of the Order; personal liability of Board members; patents, copyrights, inventions and publications; amendments to the Order; and separability of Order provisions.

Proposal II

The New Zealand Meat Producers Board (NZMPB) proposes that of the 25 importers represented on the Board, 6 should be representatives of sheepmeat importers, and the remaining positions should be proportionally allocated to importers of wool and other sheep products. We have accepted this proposal for comment and identified it in § 1280.201 in the regulatory section under Proposal II.

NZMPB proposes that organizations that represent importers of sheep or sheep products may make nominations for representation of the importer unit. We have accepted this proposal for comment and identified it in § 1280.202 in the regulatory section under Proposal II.

NZMPB proposes that the Secretary certify foreign producer organizations that have historically represented importer interests in the United States market. We did not accept this proposal because the Act (1) contemplates that the Secretary would solicit importer nominees from United States organizations that have been certified and represent importers of sheep and sheep products and (2) does not authorize the Secretary to certify foreign producer organizations. Additionally, NZMPB's proposed criterion for eligibility for certification, that limits eligibility to—''foreign producer organizations with a history of representing importer interests in the United States market,''—is not one of the three specified criteria for certification set forth in the Act.

NZMPB proposes that at least one of the three importer members on the Executive Committee should represent importers of sheepmeat. We have accepted this proposal for comment and identified it in § 1280.217 in the regulatory section under Proposal II.

NZMPB proposes that the rate of assessment of sheep and sheep products not be raised without an affirmative determination by the Secretary, in consultation with the Special Trade Representative, and that such action would not violate the United States' obligations under the General Agreements on Tariffs and Trade. We did not accept this proposal because the Secretary is already directed to act pursuant to 7 U.S.C. 2278 and consequently, it is not necessary to include such request in the proposed Order.

NZMPB proposes that the equivalent of 1-cent-per-pound of live sheep should be determined by applying the dressing yield conversion factor published annually by the Department. We did not accept this proposal because the Act gives the Secretary the latitude to use the conversion factors that will most accurately determine the live sheep equivalents, and NZMPB's proposal would limit those calculations to the dressing percentage (yield).

Proposal III

The Australian Meat and Live-stock Corporation (AMLC) proposes a prohibition on the use of assessments for country of origin-specific promotions or programs. We have accepted this proposal for comment and identified it in § 1280.223 in the regulatory section under Proposal III.

Proposal IV

The Wools of New Zealand (WNZ) proposes (1) that funds generated under this subpart be used to promote a wide range of wool products in the United States, including interior textile products, e.g., carpet, rugs, and upholstery; and (2) that these funds be used to promote wool generically rather than to promote wool specifically grown in the United States. We have accepted this proposal and identified it in § 1280.223 in the regulatory section under Proposal IV.

Proposal V

The National Lamb Feeders Association (NLFA) proposes that the ''national feeder organization'' be defined as the only (1) organization in the United States chartered to represent lamb feeders with open membership for all interested in feeding lambs and (2) organization eligible to submit the names of 15 sheep feeders for appointment to the 10 sheep feeder positions on the Board. We did not accept this proposal because it would preclude other existing organizations, new organizations, and/or successor organizations from being eligible to nominate feeders to the Board, thereby restricting the opportunity for all qualified organizations to participate in the nomination process.

NLFA proposes that assessments collected under the program be used to promote ''Fresh American Lamb.'' We have accepted this proposal for comment and identified it in § 1280.223 in the regulatory section under Proposal V.

NLFA proposes that the Board use its contracting powers to provide an annual funding base to NLFA to assure continuation of industry information and education programs. This proposal was not accepted because the Act does not authorize such funding.

NLFA proposes that the assessment be ''phased-in'' for the first 90 days after the effective date of the Order, and that lamb feeders be assessed ½-cent-per-head-per-day, thus making contributions to the program fair and equitable. NLFA provided the following example to illustrate its proposal: If a feeder sells lambs 20 days or 60 days after the effective date of the Order the assessment would be calculated as follows:

20 days x $0.005/head/day = $0.10/head; or
60 days x $0.005/head/day = $0.30/head.

We did not accept this proposal because the Act contemplates that the assessment rate of 1-cent-per-pound of live sheep sold shall be the rate of assessment on the effective date of any Order.

Additionally, the Act makes no provisions for modifying the assessment rate for any particular group of persons or type of sheep (i.e., feeder).

The Lamb Committee of the National Livestock and Meat Board (Lamb Committee) proposed that the Board annually fund the Lamb Committee's projects and that the Lamb Committee should receive not less than the amount it currently receives through voluntary contributions—approximately 2½ percent of the estimated income to be collected by the Board—to be used only for research, education, and consumer information projects. This proposal was not accepted because the Act does not authorize such funding.

Before the Department issues the final Order that will be voted on in an up-front referendum, it will analyze all

written views received to date, as well as written comments on the five proposals published below. The program will not become operational unless and until producers, feeders, and importers approve the program in the up-front referendum.

In addition to Subpart A—Sheep and Wool Promotion, Research, Education, and Information Order—proposed herein, the Department is proposing procedures under this part for the certification of organizations and the nomination of sheep producers, feeders, and importers for appointment to the Board, in order to expedite as much as possible the receipt of nominations for appointment to the Board.

Subpart C—Procedures for Certification of Organizations and Nominations of Sheep Producers, Feeders, and Importers for Appointment to the National Sheep Promotion, Research, and Information Board (Board) is summarized as follows:

Sections 1280.400–1280.414 of this part would establish procedures for certification of organizations and nominations of sheep producers, feeders, and importers for appointment to the Board.

List of Subjects in 7 CFR Part 1280

Administrative practice and procedure, Advertising, Agricultural research, Marketing agreements, Sheep and sheep products, Reporting and record keeping.

The full proposal and the four partial proposals set forth below have not received the approval of the Secretary.

We hereby propose that chapter XI of title 7 of the Code of Federal Regulations be amended as follows:

Proposal I

1. Part 1280 is proposed to be added to read as follows:

PART 1280 SHEEP PROMOTION, RESEARCH, AND INFORMATION

Subpart A—Sheep and Wool Promotion, Research, Education, and Information Order

Sec.

Definitions

1280.101 Act.
1280.102 Board.
1280.103 Carbonized wool.
1280.104 Certified organization.
1280.105 Collecting person.
1280.106 Consumer information.
1280.107 Customs Service.
1280.108 Degreased wool.
1280.109 Department.
1280.110 Education.
1280.111 Executive committee.
1280.112 Exporter.
1280.113 Feeder.
1280.114 Greasy wool.
1280.115 Handler.
1280.116 Importer.
1280.117 Industry information.
1280.118 National feeder organization.
1280.119 Part and subpart.
1280.120 Person.
1280.121 Processor.
1280.122 Producer.
1280.123 Producer information.
1280.124 Promotion.
1280.125 Pulled wool.
1280.126 Qualified State Sheep Board.
1280.127 Raw wool.
1280.128 Research.
1280.129 Secretary.
1280.130 Sheep.
1280.131 Sheep products.
1280.132 State.
1280.133 Unit.
1280.134 United States.
1280.135 Wool.
1280.136 Wool products.

National Sheep Promotion, Research, and Information Board

1280.201 Establishment and membership of the Board.
1280.202 Nominations.
1280.203 Nominee's agreement to serve.
1280.204 Appointment.
1280.205 Method of obtaining nominations.
1280.206 Vacancies.
1280.207 Certification of organizations.
1280.208 Term of office.
1280.209 Compensation.
1280.210 Removal.
1280.211 Powers and duties of the Board.
1280.212 Budgets.
1280.213 Books and records of the Board.
1280.214 Investment of funds.
1280.215 Use of assessments.

Executive Committee

1280.216 Establishment.
1280.217 Membership.
1280.218 Powers and duties.
1280.219 Term of office.
1280.220 Chairperson.
1280.221 Quorum.
1280.222 Vacancies.

Expenses

1280.223 Expenses.

Assessments

1280.224 Sheep purchases.
1280.225 Wool purchases.
1280.226 Direct processing.
1280.227 Export.
1280.228 Imports.
1280.229 Qualified State Sheep Board.
1280.230 Collection.
1280.231 Prohibition on use of funds.

Reports, Books, and Records

1280.232 Reports.
1280.233 Books and records.
1280.234 Use of information.
1280.235 Confidentiality.

Miscellaneous

1280.240 Right of the Secretary.
1280.241 Proceedings after termination.
1280.242 Effect of termination or amendment.
1280.243 Personal liability.
1280.244 Patents, copyrights, invention, and publication.
1280.245 Amendments.
1280.246 Separability.

Subpart B—[RESERVED]

Subpart C—Procedures for Certification of Organizations and Nominations of Sheep Producers, Feeders, and Importers for Appointment to the National Sheep Promotion, Research, and Information Board

1280.400 General.
1280.401 Definitions.
1280.402 Administration.
1280.403 Certification of eligibility.
1280.404 Application for certification.
1280.405 Review of certification.
1280.406 Notification of certification and the listing of certified organizations.
1280.407 Solicitation of nominations for appointment to the Board.
1280.408 Nominations of members for appointment to the Board.
1280.409 Initial Board membership.
1280.410 Length of appointment to the initial Board.
1280.411 Acceptance of appointment.
1280.412 Verification.
1280.413 Confidential treatment of information.
1280.414 Paperwork Reduction Act assigned number.

Subpart D—[Reserved]

Subpart E—[Reserved]

Authority: 7 U.S.C. 7101–7111.

Subpart A—Sheep and Wool Promotion, Research, Education, and Information Order

Definitions

§ 1280.101 Act.

The term ''Act'' means the Sheep Promotion, Research, and Information Act of 1994, 7 U.S.C 7101–7111; Public Law No. 103–107; 108 Statute 4210, enacted October 22, 1994, and any amendments thereto.

§ 1280.102 Board.

The term ''Board'' means the National Sheep Promotion, Research, and Information Board established pursuant to § 1280.201.

§ 1280.103 Carbonized wool.

The term ''carbonized wool'' means wool that has been immersed in a bath, usually of mineral acids or acid salts, that destroys vegetable matter in the wool, but does not affect the wool fibers.

§ 1280.104 Certified organization.

The term ''certified organization'' means any organization that has been certified by the Secretary pursuant to this part as being eligible to submit nominations for membership on the Board.

§ 1280.105 Collecting person.

The term ''collecting person'' means any person who is responsible for collecting an assessment pursuant to the Act, this subpart and regulations

prescribed by the Board and approved by the Secretary, including processors and any other persons who are required to remit assessments to the Board pursuant to this part, except that a collecting person who is a market agency; *i.e.*, commission merchant, auction market, or livestock market in the business of receiving such sheep or sheep products for sale on commission for or on behalf of a producer or feeder shall pass the collected assessments on to the subsequent purchaser pursuant to the Act, this subpart and the regulations prescribed by the Board and approved by the Secretary.

§ 1280.106 Consumer information.

The term ''consumer information'' means nutritional data and other information that will assist consumers and other persons in making evaluations and decisions regarding the purchase, preparation, or use of sheep products.

§ 1280.107 Customs Service.

The term ''Customs Service'' means the U.S. Customs Service of the Department of the Treasury.

§ 1280.108 Degreased wool.

The term ''degreased wool'' means wool from which the bulk of impurities has been removed by processing.

§ 1280.109 Department.

The term ''Department'' means the U.S. Department of Agriculture.

§ 1280.110 Education.

The term ''education'' means activities providing information relating to the sheep industry or sheep products to producers, feeders, importers, consumers, and other persons.

§ 1280.111 Executive Committee.

The term ''Executive Committee'' means the Executive Committee of the Board established under § 1280.216.

§ 1280.112 Exporter.

The term ''exporter'' means any person who exports domestic live sheep or greasy wool from the United States.

§ 1280.113 Feeder.

The term ''feeder'' means any person who feeds lambs until the lambs reach slaughter weight.

§ 1280.114 Greasy wool.

The term ''greasy wool'' means wool that has not been washed or otherwise cleaned.

§ 1280.115 Handler.

The term ''handler'' means any person who purchases and markets greasy wool.

§ 1280.116 Importer.

The term ''importer'' means any person who imports sheep or sheep products into the United States.

§ 1280.117 Industry information.

The term ''industry information'' means information and programs that will lead to increased efficiency in processing and the development of new markets, marketing strategies, increased marketing efficiency, and activities to enhance the image of sheep or sheep products on a national or international basis.

§ 1280.118 National feeder organization.

The term ''national feeder organization'' means any organization of feeders that has been certified by the Secretary pursuant to the Act and this part as being eligible to submit nominations for membership on the Board.

§ 1280.119 Part and subpart.

''Part'' means the Sheep and Wool Promotion, Research, Education, and Information Order and all rules and regulations issued pursuant to the Act and the Order, and the Order itself shall be a ''subpart'' of such part.

§ 1280.120 Person.

The term ''person'' means any individual, group of individuals, partnership, corporation, association, cooperative, or any other legal entity.

§ 1280.121 Processor.

The term ''processor'' means any person who slaughters sheep or processes greasy wool into degreased wool.

§ 1280.122 Producer.

The term ''producer'' means any person, other than a feeder, who owns or acquires ownership of sheep.

§ 1280.123 Producer information.

The term ''producer information'' means activities designed to provide producers, feeders, and importers with information relating to production or marketing efficiencies or developments, program activities, or other information that would facilitate an increase in the consumption of sheep or sheep products.

§ 1280.124 Promotion.

The term ''promotion'' means any action (including paid advertising) to advance the image and desirability of sheep or sheep products, to improve the competitive position, and stimulate sales, of sheep products in the domestic and international marketplace.

§ 1280.125 Pulled wool.

The term ''pulled wool'' means wool that is pulled from the skin of slaughtered sheep.

§ 1280.126 Qualified State Sheep Board.

The term ''Qualified State Sheep Board'' means a sheep and wool promotion entity that (A) is authorized by State statute or organized and operating within a State, (B) receives voluntary contributions or dues and conducts promotion, research, or consumer information programs with respect to sheep or wool, or both, and (C) is recognized by the Board as the sheep and wool promotion entity within the State; except that not more than one QSSB shall exist in any State at any one time.

§ 1280.127 Raw wool.

The term ''raw wool'' means greasy wool, pulled wool, degreased wool, or carbonized wool.

§ 1280.128 Research.

The term ''research'' means development projects and studies relating to the production (including the feeding of sheep), processing, distribution, or use of sheep or sheep products, to encourage, expand, improve, or make more efficient the marketing of sheep or sheep products.

§ 1280.129 Secretary.

The term ''Secretary'' means the Secretary of Agriculture of the United States or any other officer or employee of the Department to whom authority has been delegated, or to whom authority may be delegated, to act in the Secretary's stead.

§ 1280.130 Sheep.

The term ''sheep'' means ovine animals of any age, including lambs.

§ 1280.131 Sheep products.

The term ''sheep products'' means products produced in whole or in part from sheep, including wool and products containing wool fiber.

§ 1280.132 State.

The term ''State'' means each of the 50 States.

§ 1280.133 Unit.

The term ''unit'' means each State, group of States, or class designation that is represented on the Board.

§ 1280.134 United States.

The term ''United States'' means the 50 States and the District of Columbia.

§ 1280.135 Wool.

The term ''wool'' means the fiber from the fleece of a sheep.

§ 1280.136 Wool products.

The term ''wool products'' means products produced, in whole or in part, from wool and products containing wool fiber.

National Sheep Promotion, Research, and Information Board

§ 1280.201 Establishment and membership of the Board.

There is hereby established a National Sheep Promotion, Research, and Information Board (Board) of 120 members. Members of the Board shall be appointed by the Secretary from nominations submitted in accordance with this subpart. The seats shall be apportioned as follows:

(a) Producers: For purposes of nominating producers to the Board, each State shall be represented by the following number of members:

Unit	Board members
Alabama	1
Alaska	1
Arizona	1
Arkansas	1
California	5
Colorado	4
Connecticut	1
Delaware	1
Florida	1
Georgia	1
Hawaii	1
Idaho	2
Illinois	1
Indiana	1
Iowa	2
Kansas	1
Kentucky	1
Louisiana	1
Maine	1
Maryland	1
Massachusetts	1
Michigan	1
Minnesota	2
Mississippi	1
Missouri	1
Montana	5
Nebraska	1
Nevada	1
New Hampshire	1
New Jersey	1
New Mexico	2
New York	1
North Carolina	1
North Dakota	2
Ohio	1
Oklahoma	1
Oregon	2
Pennsylvania	1
Rhode Island	1
South Carolina	1
South Dakota	4
Tennessee	1
Texas	10
Utah	3
Vermont	1
Virginia	1
Washington	1
West Virginia	1
Wisconsin	1
Wyoming	5

(b) Feeders. The feeder sheep industry shall be represented by 10 members.

(c) Importers. Importers shall be represented by 25 members.

(d) Alternates. A unit represented by only one producer member may have an alternate member appointed to ensure representation at meetings of the Board.

§ 1280.202 Nominations.

(a) Producers. The Secretary shall appoint producers and alternates to represent units as specified under § 1280.201(a) of this subpart from nominations submitted by organizations certified under § 1280.207. A certified organization may submit only nominations for producer representatives and alternates if appropriate from the membership of the organization for the unit in which the organization operates. To be represented on the Board, each certified organization shall submit to the Secretary at least 1.5 nominations for each seat on the Board for which the unit is entitled to representation. If a unit is entitled to only one seat on the Board, the unit shall submit at least two nominations for the appointment.

(b) Feeders. The Secretary shall appoint representatives of the feeder sheep industry to seats established under § 1280.201(b) from nominations submitted by qualified national organizations that represent the feeder sheep industry. To be represented on the Board, the industry shall provide at least 1.5 nominations for each appointment to the Board to which the feeder sheep industry is entitled.

(c) Importers. The Secretary shall appoint importers to seats established under § 1280.201(c) from nominations submitted by qualified organizations that represent importers. The Secretary shall receive at least 1.5 nominations for each appointment to the Board to which importers are entitled.

(d) As soon as practicable, the Secretary shall obtain nominations from certified organizations. If no organization is certified in a unit the Secretary may use other means to obtain nominations. A certified organization shall only submit nominations for positions on the Board representing units in which such certified organization can establish that it is certified as eligible to submit nominations for representation of that unit of individual producers, feeders, or importers residing in that unit.

(e) After the establishment of the initial Board, the Department shall announce when a vacancy does or will exist. Nominations shall be initiated not less than 6 months before the expiration of the terms of the members whose terms are expiring, in the manner described in § 1280.205(b). In the case of vacancies due to reasons other than the expiration of term of office, successor Board members shall be appointed pursuant to § 1280.206.

(f) Where there is more than one eligible organization representing producers, feeders, or importers in a State or unit, they may caucus and jointly nominate a minimum of 1.5 qualified persons for each position representing that State or unit on the Board for which a member is to be appointed. If joint agreement is not reached with respect to any such nominations, or if no caucus is held, each certified organization may submit nominations for each appointment to be made to represent that State or unit.

(g) Nominations should be submitted in order of preference and, for the initial Board, in order of preference for staggered terms. If the Secretary rejects any nominations submitted and there are insufficient nominations submitted from which appointments can be made, the Secretary may request additional nominations under paragraphs (a), (b), or (c) of this section.

§ 1280.203 Nominee's agreement to serve.

Any producer, feeder, or importer nominated to serve on the Board, or as an alternate, shall file with the Secretary at the time of the nomination a written agreement to:

(a) Serve on the Board if appointed;

(b) Disclose any relationship with any organization that operates a qualified State or regional program or has a contractual relationship with the Board; and

(c) Withdraw from participation in deliberations, decision making, or voting on matters that concern the relationship disclosed under paragraph (b).

§ 1280.204 Appointment.

From the nominations made pursuant to § 1280.202 above, the Secretary shall appoint the members of the Board on the basis of representation provided in § 1280.201 above.

§ 1280.205 Method of obtaining nominations.

(a) Initially Established Board.

(1) Producer and Alternate Nominations. The Secretary shall solicit, from organizations certified under § 1280.207, nominations for each producer—s or alternate member's seat on the initially-established Board to which a unit is entitled. If no such organization exist, the Secretary shall solicit nominations for appointments in such manner as the Secretary determines appropriate.

(2) Feeder and Importer Nominations. The Secretary shall solicit, from certified organizations that represent feeders and importers, nominations for each seat to which feeders or importers are entitled. If no such organization exists, the Secretary shall solicit nominations for appointments in such manner as the Secretary determines appropriate. In determining whether an organization is eligible to submit nominations under this subparagraph, the Secretary shall determine whether:

(A) The organization's active membership includes a significant number of feeders or importers in relation to the total membership of the organization;

(B) There is evidence of stability and permanency of the organization; and

(C) The organization has a primary and overriding interest in representing the feeder or importer segment of the sheep industry.

(b) Subsequent Appointment.

(1) Producer Nominations. The solicitation of nominations for subsequent appointment to the Board from eligible organizations certified under § 1280.207 shall be initiated by the Secretary, with the Board securing the nominations for the Secretary.

(2) Feeder and Importer Nominations. The solicitation of feeder and importer nominations for subsequent appointment to the Board from organizations certified in accordance with § 1280.205(a)(2).

§ 1280.206 Vacancies.

To fill any vacancy occasioned by the death, removal, resignation, or disqualification of any member of the Board, the Secretary shall appoint a successor from the most recent list of nominations for the position or from nominations submitted by the Board.

§ 1280.207 Certification of organizations.

(a) In general. The eligibility of any State organization to represent producers and to participate in the making of nominations under this subpart shall be certified by the Secretary. The Secretary shall certify any State organization that the Secretary determines meets the eligibility criteria established under paragraph (b) below. An eligibility determination by the Secretary shall be final.

(b) Basis for Certification. Certification shall be based upon, in addition to other available information, a factual report submitted by the organization that shall contain information considered relevant and specified by the Secretary, including:

(1) The geographic territory covered by the active membership of the organization;

(2) The nature and size of the active membership of the organization, including the proportion of the total number of active producers represented by the organization;

(3) Evidence of stability and permanency of the organization;

(4) Sources from which the operating funds of the organization are derived;

(5) The functions of the organization; and

(6) The ability and willingness of the organization to further the aims and objectives of the Act.

(c) Primary Considerations. A primary consideration in determining the eligibility of an organization under this paragraph shall be whether;

(1) The membership of the organization consists primarily of producers who own a substantial quantity of sheep; and

(2) An interest of the organization is in the production of sheep.

§ 1280.208 Term of office.

Each appointment to the Board shall be for a term of 3 years, except that appointments to the initially established Board shall be proportionally for 1-year, 2-year, and 3-year terms. No person may serve more than two consecutive 3-year terms, except that elected officers shall not be subject to the term limitation while they hold office.

§ 1280.209 Compensation.

Board members shall serve without compensation, but shall be reimbursed for their reasonable expenses incurred in performing their duties as Board members.

§ 1280.210 Removal.

If the Secretary determines that any person appointed under this part fails to perform his or her duties properly or engages in acts of dishonesty or willful misconduct, the Secretary shall remove the person from office. The Secretary may remove a person appointed or certified under this part, or any employee of the Board, if the Secretary determines that the person's continued service would be detrimental to the purposes of the Act.

§ 1280.211 Powers and duties of the Board.

The Board shall have the following powers and duties:

(a) To elect officers of the Board, including a chairperson, vice chairperson, and secretary/treasurer;

(b) To administer this subpart in accordance with its terms and provisions;

(c) To recommend regulations to effectuate the terms and provisions of this subpart;

(d) To hold at least one annual meeting and any additional meetings it deems appropriate;

(e) To elect members of the Board to serve on the Executive Committee;

(f) To approve or reject budgets submitted by the Executive Committee;

(g) To submit budgets to the Secretary for approval;

(h) To contract with entities, if necessary, to implement plans or projects in accordance with the Act;

(i) To conduct programs of promotion, research, consumer information, education, industry information, and producer information;

(j) To receive, investigate, and report to the Secretary complaints of violations of this subpart;

(k) To recommend to the Secretary amendments to this subpart;

(l) To provide the Secretary with prior notice of meetings of the Board to permit the Secretary or a designated representative to attend such meetings;

(m) To provide not less than annually a report to producers, feeders, and importers, accounting for the funds expended by the Board, and describing programs implemented under the Act; and to make such report available to the public upon request;

(n) To establish seven regions that, to the extent practicable, contain geographically contiguous States and approximately equal numbers of sheep producers and sheep production;

(o) To employ or retain necessary staff; and

(p) To invest funds in accordance with § 1280.214.

§ 1280.212 Budgets.

(a) In general. The Board shall review the budget submitted by the Executive Committee, on a fiscal year basis, of anticipated expenses and disbursements by the Board, including probable costs of administration and promotion, research, consumer information, education, industry information, and

producer information projects. The Board shall submit the budget to the Secretary for the Secretary's approval.

(b) Limitation. No expenditure of funds may be made by the Board unless such expenditure is authorized under a budget or budget amendment approved by the Secretary.

§ 1280.213 Books and records of the Board.

The Board shall:

(a) Maintain such books and records, which shall be made available to the Secretary for inspection and audit, as the Secretary may prescribe,

(b) Prepare and submit to the Secretary, from time-to-time, such reports as the Secretary may prescribe, and

(c) Account for the receipt and disbursement of all funds entrusted to it. The Board shall cause its books and records to be audited by an independent auditor at the end of each fiscal year, and a report of such audit to be submitted to the Secretary.

§ 1280.214 Investment of funds.

The Board may invest, pending disbursement, funds it receives under this subpart, only in obligations of the United States or any agency thereof, in general obligations of any State or any political subdivision thereof, in any interest-bearing account or certificate of deposit of a bank that is a member of the Federal Reserve System, or in obligations fully guaranteed as to principal and interest by the United States. Any income from any such investment may be used for any purpose for which the invested funds may be used.

§ 1280.215 Use of assessments.

(a) Assessments received by the Board shall be used by the Board for the payment of expenses incurred in administering this subpart, including a reasonable reserve.

(b) The Board shall reimburse the Secretary, from assessments collected, for costs incurred in implementing and administering the Order as provided for under the Act.

Executive Committee

§ 1280.216 Establishment.

The Board shall establish an Executive Committee of the Board to assist the Board in the administration of the terms and provisions of this subpart, under the direction of the Board, and consistent with the policies determined by the Board.

§ 1280.217 Membership.

The Executive Committee shall be comprised of 14 members. Eleven members of the Executive Committee shall be elected by the Board annually. Of these members:

(1) One member shall represent each of the seven regions established under § 1280.211(n) for a total of seven members representing producers;

(2) One member shall represent feeders; and

(3) Three members shall represent importers.

The remaining three members of the Executive Committee shall be the elected officers of the Board.

§ 1280.218 Powers and duties.

(a) Plans and Projects. The Executive Committee shall develop plans or projects of promotion and advertising, research, consumer information, education, industry information, and producer information, which plans or projects shall be paid for with assessments collected by the Board. The plans or projects shall not become effective until approved by the Secretary.

(b) Budgets. The Executive Committee shall be responsible for developing and submitting to the Board, for Board approval, budgets on a fiscal year basis of the Board's anticipated expenses and disbursements, including the estimated costs of advertising and promotion, research, consumer information, education, industry information, and producer information projects. The Board shall approve or disapprove such budgets and, if approved, shall submit them to the Secretary for the Secretary's approval.

§ 1280.219 Term of office.

Terms of appointment to the Executive Committee shall be for 1 year.

§ 1280.220 Chairperson.

The Chairperson of the Board shall serve as chairperson of the Executive Committee.

§ 1280.221 Quorum.

A quorum of the Executive Committee shall consist of eight members.

§ 1280.222 Vacancies.

To fill any vacancy caused by the death, removal, resignation, or disqualification of any member of the Executive Committee, the Board shall elect a successor for the position pursuant to § 1280.217.

Expenses

§ 1280.223 Expenses.

(a) The Board shall be responsible for all expenses of the Board and the Executive Committee.

(b) Contracts and Agreements. Any contract or agreement entered into by the Board shall provide that:

(1) The contracting party shall develop and submit to the Board a plan or project of promotion, research, education, consumer information, industry information, and producer information, together with a budget or budgets that shall show estimated costs to be incurred for such plan or project; and

(2) No plan, project, contract, or agreement shall become effective until it has been approved by the Secretary.

(c) The contracting party shall:

(1) keep accurate records of all of its transactions;

(2) account for funds received and expended, including staff time, salaries, and expenses expended on behalf of Board activities;

(3) make periodic reports to the Board of activities conducted; and

(4) make such other reports as the Board or the Secretary may require.

Assessments

§ 1280.224 Sheep purchases.

(a) In general. Each person making payment to a producer or feeder for sheep purchased from the producer or feeder shall be a collecting person and shall collect an assessment from the producer or feeder on each sheep sold by the producer or feeder. Each such producer or feeder shall pay such assessment to the collecting person at the rate set forth in paragraph (d) below.

(b) Remittances. Each processor making payment to a producer, feeder, or collecting person for sheep purchased from the producer, feeder, or collecting person shall be a collecting person and shall collect an assessment from the producer, feeder, or other collecting person on each sheep sold by the producer, feeder, or collecting person, and each such producer, feeder, or collecting person shall pay such assessment to the processor at the rate set forth in paragraph (d) below, and such processor shall remit the assessment to the Board.

(c) Processing. Any person who purchases sheep for processing shall collect the assessment from the seller and remit the assessment to the Board.

(d) Rate. Except as otherwise provided, the rate of assessment shall be 1-cent-per-pound of live sheep sold. The rate of assessment may be raised or lowered no more than 0.15 of a cent in

any 1 year as recommended by the Executive Committee and approved by the Board and the Secretary. The rate of assessment shall not exceed 2½-cents-per-pound.

§ 1280.225 Wool purchases.

(a) In general. Each person making payment to a producer, feeder, or handler of wool for wool purchased from the producer, feeder, or handler shall be a collecting person and shall collect an assessment from the producer, feeder, or handler on each pound of greasy wool sold. The producer, feeder, or handler shall pay such assessment to the collecting person at the rate set forth in (d) below.

(b) Remittances. Each processor making payment to a producer, feeder, handler, or collecting person for wool purchased from the producer, feeder, handler, or collecting person shall be a collecting person and shall collect an assessment from the producer, feeder, handler, or other collecting person on all wool sold by the producer, feeder, handler, or collecting person, and each such producer, feeder, handler, or collecting person shall pay such assessment to the processor at the rate set forth in paragraph (d) below and such processor shall remit the assessment to the Board.

(c) Processing. Any person purchasing greasy wool for processing shall collect the assessment and remit the assessment to the Board.

(d) Rate. Except as otherwise provided, the rate of assessment shall be 2-cents-per-pound. The rate of assessment may be raised or lowered no more than 0.2 of a cent per pound in any 1 year as recommended by the Executive Committee and approved by the Board and the Secretary. The rate of assessment shall not exceed 4-cents-per-pound of greasy wool.

§ 1280.226 Direct processing.

Each person who processes or causes to be processed sheep or sheep products of that person's own production, and markets such sheep or sheep products, shall pay an assessment on such sheep or sheep products at the time of sale at a rate equivalent to the rate established in § 1280.224(d) or § 1280.225(d), as appropriate, and shall remit such assessment to the Board.

§ 1280.227 Export.

Each person who exports live sheep or greasy wool shall remit the assessment on such sheep or greasy wool at the time of export, at a rate equivalent to the rate established in § 1280.224(d) or § 1280.225(d), as appropriate, and shall remit such assessment to the Board.

§ 1280.228 Imports.

(a) In general. Each person who imports sheep or sheep products or who imports wool or products containing wool (with the exception of raw wool) into the United States shall pay an assessment to the Board.

(b) Collection. The Customs Service is authorized to collect and remit such assessment to the Secretary for disbursement to the Board.

(c) Rate for Sheep and Sheep Products. The assessment rate for sheep shall be 1-cent-per-pound of live sheep. The assessment rate for sheep products shall be the equivalent of 1-cent-per-pound of live sheep, as determined by the Secretary in consultation with the domestic sheep industry. Such rates may be raised or lowered no more than 0.15-cent-per-pound in any 1 year as recommended by the Executive Committee and approved by the Board and the Secretary, but shall not exceed 2½-cents-per-pound.

(d) Rate for Wool and Wool Products. The assessment rate for wool and products containing wool shall be 2-cents-per-pound of degreased wool or the equivalent of degreased wool. The rate of assessment may be raised or lowered no more than 0.2-cents-per-pound in any 1 year, as recommended by the Executive Committee and approved by the Board and the Secretary, but shall not exceed 4-cents-per-pound of clean wool or the equivalent.

(e) The Secretary shall issue regulations regarding the assessment rates for imported sheep and sheep products. The Secretary may exclude from assessment certain imported products that contain *de minimis* levels of sheep or sheep products and waive the assessment on such products.

§ 1280.229 Qualified State Sheep Boards.

(a) Except as provided in paragraph (b) below, 20 percent of the total assessments collected by the Board on the marketings of domestic sheep and domestic sheep products in any 1 year from a State shall be returned to the QSSB of the State.

(b) No QSSB shall receive less than $2,500 under paragraph (a) above in any 1 year.

(c) The Board shall establish procedures with the approval of the Secretary to account for funds expended pursuant to paragraphs (a) and (b) of this section.

§ 1280.230 Collection.

(a) Each person responsible for the collection and remittance to the Board of assessments under this subpart shall do so on a monthly basis, unless the Board, with the approval of the Secretary, has specifically authorized otherwise.

(b) Late Payment Charges. Any unpaid assessments due the Board or from a person responsible for remitting assessments to the Board, shall be increased by 2 percent each month beginning with the day after the date such assessments were due under this subpart. Any assessments or late payment charges that remain unpaid shall be increased at the same rate on the corresponding day of each month thereafter until paid.

(c) Any unpaid assessments due to the Board pursuant to § 1280.224, § 1280.225, § 1280.226, and § 1280.227 shall be increased 2 percent each month beginning with the day following the date such assessments were due. Any remaining amount due, which shall include any unpaid charges previously made pursuant to this paragraph, shall be increased at the same rate on the corresponding day of each month thereafter until paid. For the purposes of this paragraph, any assessment determined at a date later than the date prescribed by this subpart because of a person's failure to submit a timely report to the Board shall be considered to have been payable by the date it would have been due if the report had been timely filed. The date of payment is the applicable postmark date or the date of receipt by the Board, whichever is earlier.

(d) If the Board is not in place by the date the first assessments are to be collected, the Secretary shall have the authority to receive assessments and invest them on behalf of the Board, and shall pay such assessments and any interest earned to the Board when it is formed. The Secretary shall have the authority to promulgate rules and regulations concerning assessments and the collection of assessments if the Board is not in place or is otherwise unable to develop such rules and regulations.

§ 1280.231 Prohibition on use of funds.

(a) Except as otherwise provided in paragraph (b) below, no funds collected by the Board under this subpart shall be used in any manner for the purpose of influencing any action or policy of the United States Government, any foreign or State Government, or any political subdivision thereof.

(b) The prohibition in paragraph (a) shall not apply:

(1) To the development and recommendation of amendments to this subpart; or

(2) To the communication to appropriate government officials, in response to a request made by the officials, of information relating to the conduct, implementation, or results of promotion, research, consumer information, education, industry information, or producer information activities under this subpart;

(c) A plan or project conducted pursuant to this title shall not make false or misleading claims on behalf of sheep or sheep products or against a competing product.

(d) No such plans or projects shall be undertaken to promote or advertise any sheep or sheep products by brand or trade name without the approval of the Board and the concurrence of the Secretary.

Reports, Books, and Records

§ 1280.232 Reports.

(a) Each collecting person, including processors and other persons required to remit assessments to the Board pursuant to § 1280.224(b) for live sheep, each person who markets sheep products of that person's own production and each exporter of sheep shall report to the Board information pursuant to regulations prescribed by the Board and approved by the Secretary. Such information may include:

(1) The number of sheep purchased, initially transferred or which, in any other manner, are subject to the collection of assessment, and the dates of such transaction;

(2) The number of sheep imported or exported, or the equivalent thereof of sheep products imported;

(3) The amount of assessment remitted;

(4) An explanation for the remittance of any assessment that is less than the pounds of sheep multiplied by the assessment rate; and

(5) The date any assessment was paid.

(b) Each collecting person, including processors and other persons required to remit assessments to the Board pursuant to § 1280.225(b) for wool purchased from the producer or handler of wool or wool products, each person purchasing greasy wool for processing, each importer of wool or wool products (except raw wool), each exporter of greasy wool, and each person who markets wool of that person's own production shall report to the Board information pursuant to regulations prescribed by the Board and approved by the Secretary. Such information may include:

(1) The amount of wool purchased, initially transferred or in any other manner subject to the collection of assessment, and the dates of such transaction;

(2) The amount of wool imported (except raw wool) or the equivalent thereof of wool products imported or the amount of greasy wool exported;

(3) The amount of assessment remitted;

(4) An explanation for the remittance of an assessment that is less than the pounds of wool multiplied by the assessment rate; and

(5) The date any assessment was paid.

§ 1280.233 Books and records.

(a) Each collecting person, including processors and other persons required to remit assessments to the Board, each importer of sheep or sheep products (except raw wool), and exporter of sheep or greasy wool, and each person who markets sheep products of that person's own production, shall maintain and make available for inspection such books and records as may be required by regulations prescribed by the Board and approved by the Secretary, including records necessary to verify any required reports. Such records shall be maintained for the period of time prescribed by the regulations issued hereunder.

(b) Document Evidencing Payment of Assessments. Each collecting person responsible for collecting an assessment paid pursuant to this subpart, other than a person who slaughters sheep or markets sheep products of his or her own production for sale, is required to give the person or collecting person from whom the collecting person collected an assessment written evidence of payment of the assessments paid pursuant to this Subpart. Such written evidence serving as a receipt shall include:

(1) Name and address of the collecting person;

(2) Name of the producer who paid the assessment;

(3) Number of head of sheep or pounds of wool sold;

(4) Total assessments paid by the producer;

(5) Date; and

(6) Such other information as the Board, with the approval of the Secretary, may require.

§ 1280.234 Use of information.

Information from records or reports required pursuant to this subpart shall be made available to the Secretary as is appropriate to the administration or enforcement of the Act, this subpart or any regulation issued under the Act. In addition, the Secretary shall authorize the use under this part of information that is accumulated under laws or regulations other than the Act or regulations issued under the Act regarding persons paying producers, feeders, importers, handlers, or processors.

§ 1280.235 Confidentiality.

(a) All information from records or reports required pursuant to this subpart shall be kept confidential by all officers and employees of the Department and of the Board. Such information may be disclosed only if the Secretary considers the information relevant, the information is disclosed only in a suit or administrative hearing brought at the direction or on the request of the Secretary, or to which the Secretary or any officer of the United States is a party, and the information relates to the Act.

(b) Administration. No information obtained under the authority of this subpart may be made available to any agency or officer of the Federal Government for any purpose other than the implementation of the Act and any investigatory or enforcement action necessary for the implementation of the Act.

(c) General Statements. Nothing in paragraph (a) may be deemed to prohibit:

(1) the issuance of general statements, based on the reports of the number of persons subject to this subpart or statistical data collected therefrom, which statements do not identify the information furnished by any person, or

(2) the publication, by direction of the Secretary, of the name of any person violating this subpart and a statement of the particular provisions of this subpart violated by such person.

(d) Penalty. Any person who willfully violates the provisions of this subpart, on conviction, shall be subject to a fine of not more than $1,000, or to imprisonment for not more than 1 year, or both, and if the person is an officer or employee of the Board or the Department, that person shall be removed from office.

Miscellaneous

§ 1280.240 Right of the Secretary.

All fiscal matters, programs or projects, bylaws, rules or regulations, reports, or other substantive actions proposed, and prepared by the Board shall be submitted to the Secretary for approval.

§ 1280.241 Proceedings after termination.

(a) Upon the termination of this subpart, the Board shall recommend not more than five of its members to the Secretary to serve as trustees for the purpose of liquidating the affairs of the Board. Such persons, upon designation by the Secretary, shall become trustees of all the funds and property owned, in the possession of or under the control of the Board, including any claims of the Board against third parties that exist at the time of such termination.

(b) The trustees shall:

(1) Act as trustees until discharged by the Secretary;

(2) Carry out the obligations of the Board under any contracts or agreements entered into by the Board pursuant to § 1280.223(b);

(3) From time to time account for all receipts and disbursements and deliver all property on hand, together with all books and records of the Board and of the trustees, to such persons as the Secretary may direct; and

(4) Upon the request of the Secretary, execute such assignment of other instruments necessary or appropriate to transfer to such persons full title and right to all of the funds, property, and claims of the Board or the trustees pursuant to this subpart.

(c) Any person to whom funds, property or claims have been transferred or delivered pursuant to this subpart shall be subject to the same obligation imposed upon the Board and upon the trustees.

(d) Any residual funds not required to pay the necessary costs of liquidation shall be turned over to the Secretary to be used, to the extent practicable, for continuing one or more of the promotion, research, consumer information, education, industry information, and producer information plans or projects authorized pursuant to this subpart.

§ 1280.242 Effect of termination or amendment.

Unless otherwise expressly provided by the Secretary, the termination of this subpart or of any regulation issued pursuant thereto, or the issuance of any amendment to either thereof, shall not:

(a) Affect or waive any right, duty, obligation, or liability that has arisen or may hereafter arise in connection with any provision of this subpart or any regulation issued thereunder; or

(b) Release or extinguish any violation of this subpart or any regulation issued thereunder; or

(c) Affect or impair any rights or remedies of the United States, the Secretary or any person with respect to any such violation.

§ 1280.243 Personal liability.

No member, employee, or agent of the Board, including employees, agents, or Board members of the QSSB, acting pursuant to the authority provided in this subpart, shall be held personally responsible, either individually or jointly, in any way whatsoever, to any person for errors in judgment, mistakes, or other acts of either commission or omission, of such member, employee, or agent except for acts of dishonesty or willful misconduct.

§ 1280.244 Patents, copyrights, inventions, and publication.

Any patents, copyrights, inventions, or publications developed through the use of funds remitted to the Board under the provisions of this subpart shall be the property of the United States Government as represented by the Board, and shall, along with any rents, royalties, residual payments, or other income from the rental, sales, leasing, franchising, or other uses of such patents, copyrights, inventions, or publications, inure to the benefit of the Board. Upon termination of this subpart, § 1280.240 shall apply to determine disposition of all such property.

§ 1280.245 Amendments.

Amendments to the subpart may be proposed, from time to time, by the Board or by any interested person affected by the provisions of the Act, including the Secretary.

§ 1280.246 Separability.

If any provision of this subpart is declared invalid or its applicability to any person or circumstances is held invalid, the validity of the remainder of this subpart of the applicability thereof to other persons or circumstances shall not be affected thereby.

Proposal II

§ 1280.201 Establishment and membership of the Board.

(c) Importers. Importers shall be represented by 25 members. At least six members shall represent importers of sheepmeat, and the remaining importer positions shall be proportionally allocated to importers of wool and sheep and sheep products.

§ 1280.202 Nominations.

(c) Importers. The Secretary shall appoint importers to seats established under § 1280.201(c), with nominations for representation of the importer unit made by organizations which represent importers of sheep or sheep products.

Executive Committee

§ 1280.217 Membership.

(3) Three members of the Executive Committee shall represent importers, and at least one importer member shall represent sheepmeat importers.

Proposal III

Expenses

§ 1280.223 Expenses.

(d) The use of assessments for country of origin-specific promotions or programs is prohibited.

Proposal IV

Expenses

§ 1280.223 Expenses.

(d) Funds generated under this subpart shall be used to promote a wide range of wool products in the United States including interior textile products, *e.g.*, carpet, rugs, and upholstery.

(e) Funds generated under this subpart shall be used to promote wool generically rather than to promote wool specifically grown in the United States.

Proposal V

Expenses

§ 1280.223 Expenses.

(d) Funds generated under this subpart shall be used for the promotion of ''Fresh American Lamb.''

Subpart B—[Reserved]

Subpart C—Procedures for Certification of Organizations and Nominations of Sheep Producers, Feeders, and Importers for Appointment to the National Sheep Promotion, Research, and Information Board

PART 1280—SHEEP PROMOTION, RESEARCH, AND INFORMATION

1280.400 General.
1280.401 Definitions.
1280.402 Administration.
1280.403 Certification of Eligibility.
1280.404 Application for Certification.
1280.405 Review of Certification.
1280.406 Notification of Certification and the Listing of Certified Organizations.
1280.407 Solicitation of Nominations for Appointment to the Board.
1280.408 Nominations of Members for Appointment to the Board.
1280.409 Initial Board Membership.
1280.410 Length of Appointment to Initial Board.
1280.411 Acceptance of Appointment.
1280.412 Verification.
1280.413 Confidential Treatment of Information.
1280.414 Paperwork Reduction Act Assigned Number.

§ 1280.400 General.

The Secretary shall determine which organizations are certified as eligible to nominate sheep producers and

alternates, sheep feeders, and importers of sheep and sheep products (excluding importers that import only raw wool) for appointment to the Board. The making and receiving of the nominations shall be conducted in accordance with this Subpart.

§ 1280.401 Definitions.

As used in this subpart:

(a) The term ''Act'' means the Sheep Promotion, Research, and Information Act of 1994, 7 U.S.C. 7101–7111, Public Law 103–407, 108 Statute 4210, enacted October 22, 1994, and any amendments thereto.

(b) The term ''Board'' means the National Sheep Promotion, Research, and Information Board.

(c) The term ''carbonized wool'' means wool that has been immersed in a bath, usually of mineral acids or acid salts, that destroys vegetable matter in the wool, but does not affect the wool fibers.

(d) The term ''Department'' means the U.S. Department of Agriculture.

(e) The term ''feeder'' means any person who feeds lambs until the lambs reach slaughter weight.

(f) The term ''importer'' means any person who imports sheep or sheep products into the United States.

(g) The term ''Livestock and Seed Division'' means the Livestock and Seed Division of the Department's Agricultural Marketing Service.

(h) The term ''National feeder organization'' means any organization of feeders that has been certified by the Secretary pursuant to the Act and this part as being eligible to submit nominations for membership on the Board.

(i) The term ''person'' means any individual, group of individuals, partnership, corporation, association, cooperative, or any other legal entity.

(j) The term ''producer'' means any person, other than a feeder, who owns or acquires ownership of sheep.

(k) The term ''raw wool'' means greasy wool, pulled wool, degreased wool, or carbonized wool.

(l) The term ''Secretary'' means the Secretary of Agriculture of the United States or any officer or employee of the Department to whom authority has been delegated, or to whom authority may be delegated to act in the Secretary's stead.

(m) The term ''sheep'' means ovine animals of any age, including lambs.

(n) The term ''sheep products'' means products produced in whole or in part from sheep, including wool and products containing wool fiber.

(o) The term ''State'' means each of the 50 States.

(p) The term ''unit'' means each State, group of States or class designation that is represented on the Board.

(q) The term ''United States'' means the 50 States and the District of Columbia.

(r) The term ''wool'' means the fiber from the fleece of a sheep.

(s) The term ''wool products'' means products produced, in whole or in part, from wool and products containing wool fiber.

§ 1280.402 Administration.

The Livestock and Seed Division shall have the responsibility of administering the provisions of this subpart.

§ 1280.403 Certification of eligibility.

(a) State Organizations. Requirements for Certification. The Secretary shall certify any State organization that the Secretary determines meets the criteria established under paragraphs (a) and (b) of this section to be eligible for certification to nominate producer members and alternate producer members to the Board. Certification for State producer organizations shall be based upon:

(1) The geographic territory covered by the active membership of the organization;

(2) The nature and size of the active membership of the organization, including the proportion of the total number of active producers represented by the organization;

(3) Evidence of stability and permanency of the organization;

(4) Sources from which the operating funds of the organization are derived;

(5) The functions of the organization; and

(6) The ability and willingness of the organization to further the aims and objectives of the Act.

(b) Primary Considerations. A primary consideration in determining the eligibility of a State producer organization under this paragraph shall be whether:

(1) The membership of the organization consists primarily of producers who own a substantial quantity of sheep; and

(2) An interest of the organization is in the production of sheep.

(c) Feeder and Importer Organizations. Requirements for certification.

The Secretary shall certify any national feeder organization and qualified importer organization that the Secretary determines meets the following criteria to be eligible for certification to nominate feeders and importers to the Board:

(1) The organization's active membership includes a significant number of feeders or importers in relation to the total membership of the organization;

(2) There is evidence of stability and permanency of the organization; and

(3) The organization has a primary and overriding interest in representing the feeder or importer segment of the sheep industry.

(d) The Secretary may also consider additional information that the Secretary deems relevant and appropriate. The Secretary's determination as to eligibility shall be final.

§ 1280.404 Application for certification.

Any organization that meets the eligibility criteria for certification specified in § 1280.403 is entitled to apply to the Secretary for such certification of eligibility to nominate sheep producers, feeders, or importers for appointment to the Board. The Secretary may require third party verification of information submitted by organizations, in determining their eligibility. To apply, such organization must submit a completed ''Application for Certification of Organization'' form. Copies may be obtained from the Livestock and Seed Division; AMS–USDA, Room 2606–S; P.O. Box 96456; Washington, D.C. 20090–6456. (Telephone: 202/720–1115)

§ 1280.405 Review of certification.

The Secretary may terminate or suspend certification or eligibility of any organization or association if it ceases to comply with the certification or eligibility criteria set forth in this subpart. The Secretary may require any information deemed necessary to ascertain whether the organization may remain certified or eligible to make nominations. The Secretary may require third party verification of information submitted by organizations in determining their eligibility to continue making nominations.

§ 1280.406 Notification of certification and the listing of certified organizations.

Organizations shall be notified in writing whether they are eligible to nominate sheep producers, feeders, or importers as members to the Board or not. A copy of the certification or eligibility determination shall be furnished to certified or eligible organizations. Copies shall also be available for inspection in the Livestock and Seed Division.

§ 1280.407 Solicitation of nominations for appointment to the Board.

In general, as soon as practicable after this subpart becomes operational, nominations for appointment to the initial Board shall be obtained from certified producer, feeder, and importer organizations by the Secretary.

(a) Initially Established Board.

(1) Producer and Alternate Nominations. The Secretary shall solicit from organizations certified under § 1280.403 (a) and (b) nominations for each producer or alternate member seat on the initially established Board to which a unit is entitled. If no such organization exists, the Secretary shall solicit nominations for appointments in such manner as the Secretary determines appropriate.

(2) Feeder and Importer Nominations. The Secretary shall solicit from organizations certified under § 1280.403(c) nominations for each feeder or importer member on the initially established Board to which a unit is entitled. If no such organization exists, the Secretary shall solicit nominations for appointment in such manner as the Secretary determines appropriate.

§ 1280.408 Nomination of members for appointment to the Board.

(1) In general. All nominations to the Board shall be made in the following manner:

(a) Producers. The Secretary shall appoint sheep producer and alternate members to represent units as specified under § 1280.409 (a) and (b) of this subpart, from nominations submitted by organizations certified under § 1280.403. A certified organization may only submit nominations for producer representatives and alternates if appropriate from the membership of the organization for the unit in which the organization operates. To be represented on the Board, each certified organization shall submit to the Secretary at least 1.5 nominations for each seat on the Board for which the unit is entitled to representation. If a unit is entitled to only one seat on the Board, the unit shall submit at least two nominations for the appointment. If a producer member and a producer alternate member are to be appointed to represent the unit, at least three nominations must be submitted for the two positions.

(b) Feeders. The Secretary shall appoint representatives of the feeder sheep industry to seats established under § 1280.409(c), from nominations submitted by qualified national organizations certified under § 1280.403 that represent the feeder sheep industry. To be represented on the Board, the industry shall provide at least 1.5 nominations for each appointment to the Board to which the feeder sheep industry is entitled.

(c) Importers. The Secretary shall appoint importers to seats established under § 1280.409(d) from nominations submitted by qualified organizations certified under § 1280.403 that represent importers of sheep and sheep products. The Secretary shall receive at least 1.5 nominations for each appointment to the Board to which importers are entitled.

(d) After the establishment of the initial Board, the Department shall announce when a vacancy does or will exist. Nominations for subsequent appointments shall be initiated by the Secretary with the Board securing the nominations from certified producer organizations. Feeder and importer nominees shall be submitted directly to the Secretary by certified feeder and importer organizations. Nominations shall be initiated not less than 6 months before the expiration of the terms of the members whose terms are expiring, in the manner as described in this section. In the case of vacancies caused by the death, removal, resignation, or disqualification of any member of the Board, the Secretary shall appoint a successor from the most recent list of nominations for the position or from nominations submitted by the Board for producers or from certified feeder or importer organizations for feeders and importers.

(e) Where there is more than one eligible organization representing producers in a State or unit, or representing feeders, or importers, they may caucus and jointly nominate a minimum of 1.5 qualified persons for each position representing that unit on the Board for which a producer member or producer alternate member is to be appointed. If they cannot agree on any such nominations, or if no caucus is held, each eligible organization may submit to the Secretary at least 1.5 nominations for each seat on the Board for which the unit is entitled to representation. If a unit is entitled to only one seat on the Board, the unit shall submit at least two nominations for the appointment to represent that unit.

(f) Nominations should be submitted in order of preference and, for the initial Board, in order of preference for staggered terms. If the Secretary rejects any nominations submitted and there are insufficient nominations submitted from which appointments can be made, the Secretary may request additional nominations under paragraph (a), (b), or (c) above.

(2) Official Nomination Forms. A ''Nomination for Appointment to the National Sheep Promotion, Research, and Information Board'' must be used to nominate producers, feeders, or importers for appointment to the Board. An ''Advisory Committee Membership Background Information'' form must be completed by each nominee listed on the ''Nomination for Appointment to the National Sheep Promotion, Research, and Information Board'' and must be attached to that form. Official nomination forms and additional information on nominations are available from the Marketing Programs Branch; Livestock and Seed Division; AMS–USDA, Room 2606–S; P.O. Box 96456; Washington, D.C. 20090–6456 (Telephone: 202/720–1115).

(3) The Secretary may reject any nomination submitted under subsection (1) of this section. If there are insufficient nominations from which to appoint members to the Board because the Secretary rejected the nominations submitted by a State or unit, the State or unit shall submit additional nominations, as provided in paragraph (1) of this section.

§ 1280.409 Initial Board membership.

(a) Base Membership. The number of producer members appointed to the Board from each State or unit shall be allocated as follows:

Alabama 1; Alaska 1; Arizona 1; Arkansas 1; California 5; Colorado 4; Connecticut 1; Delaware 1; Florida 1; Georgia 1; Hawaii 1; Idaho 2; Illinois 1; Indiana 1; Iowa 2; Kansas 1; Kentucky 1; Louisiana 1; Maine 1; Maryland 1; Massachusetts 1; Michigan 1; Minnesota 2; Mississippi 1; Missouri 1; Montana 5; Nebraska 1; Nevada 1; New Hampshire 1; New Jersey 1; New Mexico 2; New York 1; North Carolina 1; North Dakota 2; Ohio 1; Oklahoma 1; Oregon 2; Pennsylvania 1; Rhode Island 1; South Carolina 1; South Dakota 4; Tennessee 1; Texas 10; Utah 3; Vermont 1; Virginia 1; Washington 1; West Virginia 1; Wisconsin 1; and Wyoming 5.

(b) Alternate Members. A unit represented by only one producer member may have an alternate producer member appointed to ensure representation at meetings of the Board.

(c) Feeders. The feeder sheep industry shall be represented by ten members.

(d) Importers. Importers shall be represented by 25 members.

§ 1280.410 Length of appointment to the initial Board.

When the Secretary appoints the members to the initial Board, the

Secretary shall also specify the term of office for each member. To the extent practicable, one-third of the members shall serve for 1-year, one-third shall serve for 2-years, and one-third shall serve for 3-years. No person may serve more than two consecutive 3-year terms, except that elected officers shall not be subject to the term limitation while they hold office.

§ 1280.411 Acceptance of appointment.

Producers, feeders, and importers nominated to the Board must confirm in writing their intent to serve if appointed, to disclose any relationship with any organization that operates a qualified State or regional program or has a contractual relationship with the Board and to withdraw from participation in deliberations, decision making, or voting on matters that concern the aforementioned disclosed relationships.

§ 1280.412 Verification.

The Secretary shall have the right to examine at any time the books, documents, papers, records, files, and facilities of nominating units as the Secretary deems necessary to verify the information submitted and to procure such other information as may be required to determine whether the unit is eligible to nominate sheep producers, feeders, or importers for appointment to the Board.

§ 1280.413 Confidential treatment of information.

All documents submitted in accordance with this subpart shall be kept confidential by all employees of the Department. Nothing in this section shall be deemed to prohibit the disclosure of such information so furnished or acquired as the Secretary deems relevant and then only in the issuance of general statements based upon the reports of a number of persons subject to the Order or statistical data collected therefrom, when such a statement or data does not identify the information furnished by any one person.

§ 1280.414 Paperwork Reduction Act assigned number.

The control number assigned to the information collection requirements in Part 1280 by OMB pursuant to the Paperwork Reduction Act of 1980 is OMB 0581–0093.

Subpart D—[Reserved]

Subpart E—[Reserved]

Dated: May 26, 1995.

Lon Hatamiya,

Administrator.

[FR Doc. 95–13485 Filed 6–1–95; 8:45 am]

BILLING CODE 3410–02–P

DEPARTMENT OF TRANSPORTATION

Federal Aviation Administration

14 CFR Part 39

[Docket No. 94–NM–191–AD]

Airworthiness Directives; Airbus Model A310 and A300–600 Series Airplanes Equipped with SOGERMA-SOCEA Pilot, Co-Pilot, and Third Occupant Seats

AGENCY: Federal Aviation Administration, DOT.

ACTION: Supplemental notice of proposed rulemaking; reopening of comment period.

SUMMARY: This document revises an earlier proposed airworthiness directive (AD), applicable to certain Airbus Model A310 and A300–600 series airplanes, that would have required repetitive inspections to detect distortion and/or cracks on the attachment brackets of the backrest recline control locks of certain seats. That proposed AD would have also required replacement of cracked or distorted brackets and their associated attachment fittings with new parts, which would have terminated the repetitive inspection requirements. That proposal was prompted by a report of failure of the bracket of the backrest recline control lock on a seat due to fatigue-related cracking. This action revises the proposed rule by requiring repetitive inspections following replacement of cracked or distorted brackets and by providing a new optional terminating modification for the repetitive inspections. The actions specified by this proposed AD are intended to prevent fatigue-related cracking and/or distortion, which could result in failure of the seat backrest attach fitting, and the subsequent uncommanded 50° angle recline of the pilot or co-pilot seat; this situation could lead to the temporary inability of the pilots to control the airplane.

DATES: Comments must be received by June 23, 1995.

ADDRESSES: Submit comments in triplicate to the Federal Aviation Administration (FAA), Transport Airplane Directorate, ANM–103, Attention: Rules Docket No. 94–NM–191–AD, 1601 Lind Avenue, SW., Renton, Washington 98055–4056. Comments may be inspected at this location between 9:00 a.m. and 3:00 p.m., Monday through Friday, except Federal holidays.

The service information referenced in the proposed rule may be obtained from SOGERMA-SOCEA, Group Aerospatiale, Product Support Department, B.P. 109, 17303 Rochefort Cedex, France. This information may be examined at the FAA, Transport Airplane Directorate, 1601 Lind Avenue, SW., Renton, Washington.

FOR FURTHER INFORMATION CONTACT: Stephen Slotte, Aerospace Engineer, Standardization Branch, ANM–113, FAA, Transport Airplane Directorate, 1601 Lind Avenue, SW., Renton, Washington 98055–4056; telephone (206) 227–2797; fax (206) 227–1320.

SUPPLEMENTARY INFORMATION:

Comments Invited

Interested persons are invited to participate in the making of the proposed rule by submitting such written data, views, or arguments as they may desire. Communications shall identify the Rules Docket number and be submitted in triplicate to the address specified above. All communications received on or before the closing date for comments, specified above, will be considered before taking action on the proposed rule. The proposals contained in this notice may be changed in light of the comments received.

Comments are specifically invited on the overall regulatory, economic, environmental, and energy aspects of the proposed rule. All comments submitted will be available, both before and after the closing date for comments, in the Rules Docket for examination by interested persons. A report summarizing each FAA-public contact concerned with the substance of this proposal will be filed in the Rules Docket.

Commenters wishing the FAA to acknowledge receipt of their comments submitted in response to this notice must submit a self-addressed, stamped postcard on which the following statement is made: ''Comments to Docket Number 94–NM–191–AD.'' The postcard will be date stamped and returned to the commenter.

Availability of NPRMs

Any person may obtain a copy of this NPRM by submitting a request to the FAA, Transport Airplane Directorate, ANM–103, Attention: Rules Docket No.

94–NM–191–AD, 1601 Lind Avenue, SW., Renton, Washington 98055–4056.

Discussion

A proposal to amend part 39 of the Federal Aviation Regulations (14 CFR part 39) to add an airworthiness directive (AD), applicable to certain Airbus Model A310 and A300–600 series airplanes, was published as a notice of proposed rulemaking (NPRM) in the **Federal Register** on December 16, 1994 (59 FR 64872). That NPRM would have required repetitive detailed visual inspections to detect distortion and/or cracks on the attachment brackets of the seat backrest recline control locks. That NPRM would have also required replacement of both of the brackets and their associated attachment fittings with new parts; this replacement would have constituted terminating action for the repetitive inspection requirements. That NPRM was prompted by a report of failure of the bracket of the backrest recline control lock on a seat due to fatigue-related cracking. Fatigue cracks and/or distortion of the bracket of the backrest recline control lock, if not detected and corrected in a timely manner, could result in failure of the seat backrest attach fittings, and the subsequent uncommanded 50° angle recline of the pilot or co-pilot seat; this situation could lead to the temporary inability of the pilots to control the airplane.

Due consideration has been given to the comments received in response to the NPRM:

Two commenters request that the FAA revise the proposed rule to include SOGERMA-SOCEA Service Bulletin 25–233 as an optional terminating modification for the repetitive inspection requirements.

The FAA concurs. Since the issuance of that NPRM, SOGERMA-SOCEA has issued Service Bulletin 25–233, Revision 1, dated January 9, 1995, which describes procedures for modification of the backing of the control locks fittings of the backrest recline. This modification involves replacing lock washers with a back-plate and a flat washer. Accomplishment of this modification would eliminate the need for the repetitive inspections. The Direction Générale de l'Aviation Civile (DGAC), which is the airworthiness authority for France, approved this service bulletin and issued French airworthiness directive 94–188–162(B) R1 in order to assure the continued airworthiness of these airplanes in France.

The FAA examined the findings of the DGAC and reviewed the new service information. The FAA finds that replacement of the distorted or cracked brackets, as specified in the proposal, cannot preclude further cracking or distortion in the seat backrest attach fittings. Therefore, to ensure safety of the fleet, the FAA finds that inspections of the attachment brackets of the backrest recline controls locks of certain seats must be performed repetitively following replacement of distorted or cracked brackets, as specified in the French airworthiness directive. The FAA has revised paragraph (a) of this supplemental NPRM accordingly. In addition, the FAA has revised this supplemental NPRM to provide a new optional terminating modification for the repetitive inspections, as described in SOGERMA-SOCEA Service Bulletin 25–233 and specified in the French airworthiness directive.

Since these changes expand the scope of the originally proposed rule, the FAA has determined that it is necessary to reopen the comment period to provide additional opportunity for public comment.

The FAA estimates that 49 airplanes of U.S. registry will be affected by this AD, that it will take approximately 4 work hours per airplane to accomplish the required actions, and that the average labor rate is $60 per work hour. Required parts will be supplied by the manufacturer at no cost to the operators. Based on these figures, the total cost impact of the AD on U.S. operators is estimated to be $11,760, or $240 per airplane, per inspection cycle.

The total cost impact figure discussed above is based on assumptions that no operator has yet accomplished any of the proposed requirements of this AD action, and that no operator would accomplish those actions in the future if this AD were not adopted.

Should an operator elect to accomplish the optional terminating action that would be provided by this proposed AD action, the number of hours required to accomplish it would be approximately 1 per airplane, at an average labor charge of $60 per work hour. Required parts would be supplied by the manufacturer at no cost to the operators. Based on these figures, the total cost impact of the optional terminating action on U.S. operators would be $60 per airplane.

The regulations proposed herein would not have substantial direct effects on the States, on the relationship between the national government and the States, or on the distribution of power and responsibilities among the various levels of government. Therefore, in accordance with Executive Order 12612, it is determined that this proposal would not have sufficient federalism implications to warrant the preparation of a Federalism Assessment.

For the reasons discussed above, I certify that this proposed regulation (1) is not a ''significant regulatory action'' under Executive Order 12866; (2) is not a ''significant rule'' under the DOT Regulatory Policies and Procedures (44 FR 11034, February 26, 1979); and (3) if promulgated, will not have a significant economic impact, positive or negative, on a substantial number of small entities under the criteria of the Regulatory Flexibility Act. A copy of the draft regulatory evaluation prepared for this action is contained in the Rules Docket. A copy of it may be obtained by contacting the Rules Docket at the location provided under the caption **ADDRESSES.**

List of Subjects in 14 CFR Part 39

Air transportation, Aircraft, Aviation safety, Safety.

The Proposed Amendment

Accordingly, pursuant to the authority delegated to me by the Administrator, the Federal Aviation Administration proposes to amend part 39 of the Federal Aviation Regulations (14 CFR part 39) as follows:

PART 39—AIRWORTHINESS DIRECTIVES

1. The authority citation for part 39 continues to read as follows:

Authority: 49 U.S.C. App. 1354(a), 1421 and 1423; 49 U.S.C. 106(g); and 14 CFR 11.89.

§ 39.13 [Amended]

2. Section 39.13 is amended by adding the following new airworthiness directive:

Airbus Industrie: Docket 94–NM–191–AD.

Applicability: Model A310 and A300–600 series airplanes equipped with SOGERMA-SOCEA pilot, co-pilot, and third occupant seats; as listed in SOGERMA-SOCEA Service Bulletin 25–229, dated November 26, 1993; certificated in any category.

Note 1: This AD applies to each airplane identified in the preceding applicability provision, regardless of whether it has been modified, altered, or repaired in the area subject to the requirements of this AD. For airplanes that have been modified, altered, or repaired so that the performance of the requirements of this AD is affected, the owner/operator must use the authority provided in paragraph (c) to request approval from the FAA. This approval may address either no action, if the current configuration eliminates the unsafe condition; or different actions necessary to address the unsafe condition described in this AD. Such a request should include an assessment of the effect of the changed configuration on the unsafe condition addressed by this AD. In no

case does the presence of any modification, alteration, or repair remove any airplane from the applicability of this AD.

Compliance: Required as indicated, unless accomplished previously.

To prevent fatigue cracks and/or distortion in the seat bracket of the backrest recline control lock, which could result in failure of the seat backrest attach fittings, the uncommanded 50° angle recline of the pilot or co-pilot seat, and, subsequently, lead to the temporary inability of the pilots to control the airplane, accomplish the following:

(a) Prior to the accumulation of 10,000 total flight hours or within 500 flight hours after the effective date of this AD, whichever occurs later, perform a detailed visual inspection to detect distortion and/or cracks on the attachment brackets of the backrest recline control locks of certain seats, in accordance with SOGERMA-SOCEA Service Bulletin 25–229, dated November 26, 1993.

(1) If no bracket is distorted or cracked, repeat the inspection thereafter at intervals not to exceed 5,000 flight hours.

(2) If any bracket is distorted or cracked, prior to further flight, accomplish paragraph (a)(2)(i) or (a)(2)(ii) of this AD.

(i) Replace both of the brackets and their associated attachment fittings with new parts, in accordance with SOGERMA-SOCEA Service Bulletin 25–229, dated November 26, 1993. Thereafter, repeat the inspection at intervals not to exceed 5,000 flight hours. Or,

(ii) Modify the backing of the control locks fittings of the backrest recline, in accordance with SOGERMA-SOCEA Service Bulletin 25–233, Revision 1, dated January 9, 1995. Accomplishment of this modification constitutes terminating action for the repetitive inspection requirements of this AD.

(b) Modification of the backing of the control locks fittings of the backrest recline, in accordance with SOGERMA-SOCEA Service Bulletin 25–233, Revision 1, dated January 9, 1995, constitutes terminating action for the repetitive inspection requirements of this AD.

(c) An alternative method of compliance or adjustment of the compliance time that provides an acceptable level of safety may be used if approved by the Manager, Standardization Branch, ANM–113, FAA, Transport Airplane Directorate. Operators shall submit their requests through an appropriate FAA Principal Maintenance Inspector, who may add comments and then send it to the Manager, Standardization Branch, ANM–113.

Note 2: Information concerning the existence of approved alternative methods of compliance with this AD, if any, may be obtained from the Standardization Branch, ANM–113.

(d) Special flight permits may be issued in accordance with sections 21.197 and 21.199 of the Federal Aviation Regulations (14 CFR 21.197 and 21.199) to operate the airplane to a location where the requirements of this AD can be accomplished.

Issued in Renton, Washington, on May 26, 1995.

Darrell M. Pederson,

Acting Manager, Transport Airplane Directorate, Aircraft Certification Service.

[FR Doc. 95–13504 Filed 6–1–95; 8:45 am]

BILLING CODE 4910–13–U

---

14 CFR Part 39

[Docket No. 95–NM–28–AD]

Airworthiness Directives; Boeing Model 737 Series Airplanes

AGENCY: Federal Aviation Administration, DOT.

ACTION: Notice of proposed rulemaking (NPRM).

SUMMARY: This document proposes the adoption of a new airworthiness directive (AD) that is applicable to all Boeing Model 737 series airplanes. This proposal would require revising the FAA-approved Airplane Flight Manual (AFM) to provide the flightcrew with additional procedures for shutting down the auxiliary power unit (APU) when an APU fire is indicated. This proposal is prompted by reports indicating that a latent electrical failure exists in the fire extinguishing system for the APU; this failure could prevent the APU from shutting down and fire extinguishant from discharging into the APU compartment in the event of an APU fire. The actions specified by the proposed AD are intended to ensure that the flightcrew is provided with procedures for shutting down the APU in the event of an APU fire.

DATES: Comments must be received by July 31, 1995.

ADDRESSES: Submit comments in triplicate to the Federal Aviation Administration (FAA), Transport Airplane Directorate, ANM–103, Attention: Rules Docket No. 95–NM–28–AD, 1601 Lind Avenue, SW., Renton, Washington 98055–4056. Comments may be inspected at this location between 9:00 a.m. and 3:00 p.m., Monday through Friday, except Federal holidays.

FOR FURTHER INFORMATION CONTACT: Stephen Bray, Aerospace Engineer, Propulsion Branch, ANM–140S, FAA, Transport Airplane Directorate, Seattle Aircraft Certification Office, 1601 Lind Avenue, SW., Renton, Washington 98055–4056; telephone (206) 227–2681; fax (206) 227–1181.

SUPPLEMENTARY INFORMATION:

Comments Invited

Interested persons are invited to participate in the making of the proposed rule by submitting such written data, views, or arguments as they may desire. Communications shall identify the Rules Docket number and be submitted in triplicate to the address specified above. All communications received on or before the closing date for comments, specified above, will be considered before taking action on the proposed rule. The proposals contained in this notice may be changed in light of the comments received.

Comments are specifically invited on the overall regulatory, economic, environmental, and energy aspects of the proposed rule. All comments submitted will be available, both before and after the closing date for comments, in the Rules Docket for examination by interested persons. A report summarizing each FAA-public contact concerned with the substance of this proposal will be filed in the Rules Docket.

Commenters wishing the FAA to acknowledge receipt of their comments submitted in response to this notice must submit a self-addressed, stamped postcard on which the following statement is made: ''Comments to Docket Number 95–NM–28–AD.'' The postcard will be date stamped and returned to the commenter.

Availability of NPRMs

Any person may obtain a copy of this NPRM by submitting a request to the FAA, Transport Airplane Directorate, ANM–103, Attention: Rules Docket No. 95–NM–28–AD, 1601 Lind Avenue, SW., Renton, Washington 98055–4056.

Discussion

The FAA received two reports indicating that a latent electrical failure exists in the fire extinguishing system of the auxiliary power unit (APU) on Boeing Model 737 series airplanes. The FAA-approved Airplane Flight Manual (AFM) for these airplanes currently contains procedures that require the flightcrew to pull and rotate the flight compartment fire handle when an APU fire is indicated. When the flightcrew takes such action, the APU shuts down and fire extinguishant discharges into the APU compartment. However, if a latent electrical failure exists in the fire extinguishing system of the APU, this failure could prevent the APU from shutting down and fire extinguishant from discharging when the flightcrew pulls and rotates the fire handle. A latent electrical failure in the fire extinguishing system of the APU, if not corrected, could result in the inability of the flightcrew to extinguish an APU fire.

In light of this information, the FAA finds that the procedures specified

currently in the FAA-approved AFM for flightcrew response to an APU fire on Model 737 series airplanes are not defined adequately. The FAA has determined that the FAA-approved AFM for these airplanes must be revised to provide procedures for the flightcrew to turn the APU switch to the ''OFF'' position, as well as pulling and rotating the fire handle, when an APU fire is indicated. Such action will ensure that the flightcrew is able to shut down the APU in the event of an APU fire.

Since an unsafe condition has been identified that is likely to exist or develop on other products of this same type design, the proposed AD would require revising the Emergency Procedures and Limitations Sections of the FAA-approved AFM to provide the flightcrew with these additional procedures for shutting down the APU when an APU fire is indicated.

There are approximately 2,602 Model 737 series airplanes of the affected design in the worldwide fleet. The FAA estimates that 1,072 airplanes of U.S. registry would be affected by this proposed AD, that it would take approximately 1 work hour per airplane to accomplish the proposed actions, and that the average labor rate is $60 per work hour. Based on these figures, the total cost impact of the proposed AD on U.S. operators is estimated to be $64,320, or $60 per airplane.

The total cost impact figure discussed above is based on assumptions that no operator has yet accomplished any of the proposed requirements of this AD action, and that no operator would accomplish those actions in the future if this AD were not adopted.

The regulations proposed herein would not have substantial direct effects on the States, on the relationship between the national government and the States, or on the distribution of power and responsibilities among the various levels of government. Therefore, in accordance with Executive Order 12612, it is determined that this proposal would not have sufficient federalism implications to warrant the preparation of a Federalism Assessment.

For the reasons discussed above, I certify that this proposed regulation (1) is not a ''significant regulatory action'' under Executive Order 12866; (2) is not a ''significant rule'' under the DOT Regulatory Policies and Procedures (44 FR 11034, February 26, 1979); and (3) if promulgated, will not have a significant economic impact, positive or negative, on a substantial number of small entities under the criteria of the Regulatory Flexibility Act. A copy of the draft regulatory evaluation prepared for this action is contained in the Rules Docket. A copy of it may be obtained by contacting the Rules Docket at the location provided under the caption **ADDRESSES.**

List of Subjects in 14 CFR Part 39

Air transportation, Aircraft, Aviation safety, Safety.

The Proposed Amendment

Accordingly, pursuant to the authority delegated to me by the Administrator, the Federal Aviation Administration proposes to amend part 39 of the Federal Aviation Regulations (14 CFR part 39) as follows:

PART 39—AIRWORTHINESS DIRECTIVES

1. The authority citation for part 39 continues to read as follows:

Authority: 49 U.S.C. App. 1354(a), 1421 and 1423; 49 U.S.C. 106(g); and 14 CFR 11.89.

§ 39.13 [Amended]

2. Section 39.13 is amended by adding the following new airworthiness directive:

Boeing: Docket 95–NM–28–AD.

Applicability: All Model 737 series airplanes, certificated in any category.

Compliance: Required as indicated, unless accomplished previously.

To ensure that the flightcrew is provided with additional procedures necessary for shutting down the auxiliary power unit (APU) in the event of an APU fire, accomplish the following:

(a) Within 6 months after the effective date of this AD, revise the Emergency Procedures and Limitations Sections of the FAA-approved Airplane Flight Manual (AFM) to include the following procedures, which will ensure that the flightcrew is able to shut down the APU when an APU fire is indicated. This may be accomplished by inserting a copy of this AD in the AFM.

''APU FIRE WARNING

RECALL	
APU Fire Warning Switch	PULL AND ROTATE
APU Switch	OFF
REFERENCE	
Master Fire Warning	RESET''

(b) An alternative method of compliance or adjustment of the compliance time that provides an acceptable level of safety may be used if approved by the Manager, Seattle Aircraft Certification Office (ACO), FAA, Transport Airplane Directorate. Operators shall submit their requests through an appropriate FAA Principal Operations Inspector, who may add comments and then send it to the Manager, Seattle ACO.

Note: Information concerning the existence of approved alternative methods of compliance with this AD, if any, may be obtained from the Seattle ACO.

(c) Special flight permits may be issued in accordance with sections 21.197 and 21.199 of the Federal Aviation Regulations (14 CFR 21.197 and 21.199) to operate the airplane to a location where the requirements of this AD can be accomplished.

Issued in Renton, Washington, on May 26, 1995.

Darrell M. Pederson,

Acting Manager, Transport Airplane Directorate, Aircraft Certification Service.

[FR Doc. 95–13503 Filed 6–1–95; 8:45 am]

BILLING CODE 4910–13–U

---

14 CFR Part 71

[Airspace Docket No. 95–AWP–12]

Proposed Revocation of Class E Airspace Area; Merced, Castle Air Force Base (AFB), CA, and Amendment of Class E Airspace Areas; Merced Municipal/MacReady Field, CA

AGENCY: Federal Aviation Administration [FAA], DOT.

ACTION: Notice of proposed rulemaking.

SUMMARY: This notice proposes to revoke the Class E airspace area at Merced, Castle AFB, CA. This proposal action is necessary due to the closure of Castle AFB, CA. This action also proposes to amend the Class E2 and E5 airspace areas at Merced Municipal/MacReady Field, CA.

DATES: Comments must be received on or before June 30, 1995.

ADDRESSES: Send comments on the proposal in triplicate to: Federal Aviation Administration, Attn: Manager, System Management Branch, AWP–530, Docket No. 95–AWP–12, Air Traffic Division, P.O. Box 92007, Worldway Postal Center, Los Angeles, California, 90009.

The official docket may be examined in the Office of the Assistant Chief Counsel, Western Pacific Region, Federal Aviation Administration, Room 6007, 15000 Aviation Boulevard, Lawndale, California, 90261.

An informal docket may also be examined during normal business hours at the Office of the Manager, System Management Branch, Air Traffic Division, at the above address.

FOR FURTHER INFORMATION CONTACT: Scott Speer, System Management Specialist, System Management Branch, AWP–530, Air Traffic Division, Western-Pacific Region, Federal Aviation Administration, 15000 Aviation Boulevard, Lawndale, California 90261, telephone (310) 297–0010.

SUPPLEMENTARY INFORMATION:

Comments Invited

Interested parties are invited to participate in this proposed rulemaking by submitting such written data, views, or arguments as they may desire. Comments that provide the factual basis supporting the views and suggestions presented are particularly helpful in developing reasoned regulatory decisions on the proposal. Comments are specifically invited on the overall regulatory, aeronautical, economic, environmental, and energy-related aspects of the proposal. Communications should identify the airspace docket and be submitted in triplicate to the address listed above. Commenters wishing the FAA to acknowledge receipt of their comments on this notice must submit with the comments a self-addressed, stamped postcard on which the following statement is made: ''Comments to Airspace Docket No. 95–AWP–12.'' The postcard will be date/time stamped and returned to the commenter. All communications received on or before the specified closing date for comments will be considered before taking action on the proposed rule. The proposal contained in this notice may be changed in light of comments received. All comments submitted will be available for examination in the System Management Branch, Air Traffic Division, 15000 Aviation Boulevard, Lawndale, California 90261, both before and after the closing date for comments. A report summarizing each substantive public contact with FAA personnel concerned with this rulemaking will be filed in the docket.

Availability of NPRM

Any person may obtain a copy of this Notice of Proposed Rulemaking (NPRM) by submitting a request to the Federal Aviation Administration, System Management Branch, P.O. Box 92007, Worldway Postal Center, Los Angeles, California 90009. Communications must identify the notice number of this NPRM. Persons interested in being placed on a mailing list for future NPRM's should also request a copy of Advisory Circular No. 11–2A, which describes the application procedures.

The Proposal

The FAA is considering an amendment to part 71 of the Federal Aviation Regulations (14 CFR part 71) by revoking the Class E3 airspace area at Merced, Castle AFB, CA. This notice also proposes to amend the Class E2 and E5 airspace areas at Merced Municipal/MacReady Field, CA. This proposed action is necessary due to the closure of Castle AFB, CA. Class E airspace designations are published in paragraph 6000 of FAA Order 7400.9B, dated July 18, 1994, and effective September 16, 1994, which is incorporated by reference in 14 CFR 71.1. The Class E airspace designations listed in this document would be published subsequently in this Order.

The FAA has determined that this proposed regulation only involves an established body of technical regulations for which frequent and routine amendments are necessary to keep them operationally current. Therefore, this proposed regulation—(1) Is not a ''significant regulatory action'' under Executive Order 12866; (2) is not a ''significant rule'' under DOT Regulatory Policies and Procedures (44 FR 10034; February 26, 1979); and (3) does not warrant preparation of a Regulatory Evaluation as the anticipated impact is so minimal. Since this is a routine matter that will only affect air traffic procedures and air navigation, it is certified that this proposed rule will not have a significant economic impact on a substantial number of small entities under the criteria of the Regulatory Flexibility Act.

List of Subjects in 14 CFR Part 71

Airspace, Incorporation by reference, Navigation (air).

The Proposed Amendment

Accordingly, pursuant to the authority delegated to me, the Federal Aviation Administration proposes to amend part 71 of the Federal Aviation Regulations (14 CFR part 71) as follows:

PART 71—[AMENDED]

1. The authority citation for part 71 continues to read as follows:

Authority: 49 U.S.C. app. 1348(a), 1354(a), 1510; E.O. 10854; 24 FR 9565, 3 CFR, 1959–1963 Comp., p. 389; 49 U.S.C. 106(g); 14 CFR 11.69.

§ 71.1 [Amended]

2. The incorporation by reference in 14 CFR 71.1 of the Federal Aviation Administration Order 7400.9B, Airspace Designations and Reporting Points, dated July 18, 1994, and effective September 16, 1994, is amended as follows:

Paragraph 6003 Class E Airspace Areas Designated as an Extension to Class C Surface Area

* * * * *

AWP CA E3 Merced, Castle AFB, CA [Removed]

* * * * *

Paragraph 6002 Class E Airspace Areas Designated as a Surface Area for an Airport

* * * * *

AWP CA E2 Merced Municipal/MacReady Field, CA [Revised]

Merced Municipal/MacReady Field, CA
(Lat. 37°17′05″ N, long. 120°30′50″ W)

Within a 4.3-mile radius of Merced Municipal/MacReady Field. This Class E airspace is effective during the specific dates and times established in advance by a Notice to Airmen. The effective date and time will thereafter be continuously published in the Airport/Facility Directory.

* * * * *

Paragraph 6005 Class E Airspace Areas Extending Upward From 700 Feet or More Above the Surface of the Earth

* * * * *

AWP CA E5 Merced, CA [Revised]

Merced Municipal/MacReady Field, CA
(Lat. 37°17′05′ N, long. 120°30′50″ W)
El Nido VOR/DME
[Lat. 37°13′10″ N, long. 120°24′01″ W)

That airspace extending upward from 700 feet above the surface within a 6.1-mile radius of Merced Municipal/MacReady Field and within 1.8 miles each said of the El Nido VOR/DME 141° and 321° radials extending from the Merced Municipal/MacReady Field 6.1-mile radius to 2.6 miles southeast of the El Nido VOR/DME. That airspace extending upward from the 1,200 feet above the surface bounded on the northeast and east by V–459, on the south by V–230, on the west by V–109, and on the north by V–244, excluding the portions within the Fresno, CA, the Stockton, CA, and the Modesto, CA, Class E airspace areas. That airspace extending upward from 7,500 feet MSL northeast of Merced Municipal/MacReady Field bounded on the east by V–165, on the southwest by V–459, and on the north by V–244. That airspace extending upward from 12,000 feet MSL east of Merced Municipal/MacReady Field bounded on the east by long. 119°30′04″ W, on the south by the Fresno, CA, Class E airspace area, on the west by V–165, and on the north by V–244.

* * * * *

Issued in Los Angeles, California, on May 3, 1995.

Dennis T. Koehler,

Acting Manager, Air Traffic Division, Western-Pacific Region.

[FR Doc. 95–13492 Filed 6–1–95; 8:45 am]

BILLING CODE 4910–13–M

---

14 CFR Part 135

Public Meeting on Commuter Operations and General Certification and Operations

AGENCY: Federal Aviation Administration (FAA), DOT.

ACTION: Notice of public meetings.

SUMMARY: The FAA is issuing this notice to advise the public of two public

meetings on the notice of proposed rulemaking, Commuter Operations and General Certification and Operations, published in the **Federal Register** on March 29, 1995 [59 FR 16230]. The purpose of these meetings is to provide an opportunity for the public to comment on the commuter proposal.

DATES: The meetings will be held on June 14 and June 21, 1995, from 9 am to 5 pm.

ADDRESSES: Meeting locations are as follows:

June 14—McCormick Place—East Building, 2301 S. Lake Shore Drive, Chicago, Ill. 60616, phone: (312) 791–5000.

June 21—Hacienda Hotel, 3950 Las Vegas Blvd. S., Las Vegas, Nevada 89119, phone: (702) 739–8911.

Persons unable to attend the meetings may mail their comments in triplicate to: Federal Aviation Administration, Office of the Chief Counsel, Rules Docket (AGC–200), Docket No. 28154, 800 Independence Ave., NW, Washington, DC 20591.

FOR FURTHER INFORMATION CONTACT: Requests to present a statement at the public meetings on the commuter NPRM or questions regarding the logistics of the meeting should be directed to Linda Williams, Federal Aviation Administration, Office of Rulemaking (ARM–109), 800 Independence Avenue, SW., Washington, DC 20591, telephone (202) 267–9685; fax (202) 267–5075.

Questions concerning the subject matter of the public meeting on the commuter NPRM should be directed to Katherine Hakala, Flight Standards Service (AFS–250), Federal Aviation Administration, 800 Independence Ave., Washington, DC 20591. Telephone: (202) 267–8137.

SUPPLEMENTARY INFORMATION:

Background

The FAA will conduct two public meetings on the recently published commuter proposed rule. Comments from the public at this meeting should be directed specifically to the proposed rule. The notice of proposed rulemaking was published in the **Federal Register** on March 29, 1995. If adopted, the proposed rule would require certain commuter operators that now conduct operations under part 135 to conduct those operations under part 121. The commuter operators that would be affected are those part 135 operators conducting scheduled passenger-carrying operations in airplanes that have a passenger-seating configuration of 10 to 30 seats and those conducting scheduled passenger-carrying operations in turbojets regardless of seating configuration. The proposed rule would revise the requirements concerning operating certificates and operations specifications. The rule would also propose certain management officials for all operators under parts 121 and 135.

The closing date for comments on the proposal is June 27, 1995. To give the public an additional opportunity to comment on the proposed rule, the FAA is planning these public meetings. Because this additional opportunity to comment on the proposed rule is provided, the FAA does not intend to extend the closing date for comments on the NPRM.

Persons interested in obtaining a copy of the proposed commuter rule should contact Linda Williams at the address or telephone number provided in **FOR FURTHER INFORMATION CONTACT.**

Participation at the Public Meeting on the Commuter NPRM

Requests from persons who wish to present oral statements at the public meeting on the communter NPRM should be received by the FAA no later than June 9, 1995. Such requests should be submitted to Linda Williams as listed in the section titled **FOR FURTHER INFORMATION CONTACT**. Requests received after June 9 will be scheduled if time is available during the meeting; however, the name of those individuals may not appear on the written agenda. The FAA will prepare an agenda of speakers that will be available at the meeting. To accommodate as many speakers as possible, the amount of time allocated to each speaker may be less than the amount of time requested.

Public Meeting Procedures

The following procedures are established to facilitate the public meeting on the commuter NPRM:

1. There will be no admission fee or other charge to attend or to participate in the public meeting. The meeting will be open to all persons who have requested in advance to present statements or who register on the day of the meeting (between 8:00 a.m. and 9:00 a.m.) subject to availability of space in the meeting room.

2. The public meeting may adjourn early if scheduled speakers complete their statements in less time than currently is scheduled for the meeting.

3. The FAA will try to accommodate all speakers; therefore, it may be necessary to limit the time available for an individual or group.

4. Participants should address their comments to the panel. No individual will be subject to cross-examination by any other participant.

5. Sign and oral interpretation can be made available at the meeting, as well as an assistive listening device, if requested 10 calendar days before the meeting.

6. Representatives of the FAA will conduct the public meeting. A panel of FAA personnel involved in this issue will be present.

7. The meeting will be recorded by a court reporter. A transcript of the meeting and any material accepted by the panel during the meeting will be included in the public docket (Docket No. 28154). Any person who is interested in purchasing a copy of the transcript should contact the court reporter directly. This information will be available at the meeting.

8. The FAA will review and consider all material presented by participants at the public meeting. Position papers or material presenting views or information related to the proposed NPRM may be accepted at the discretion of the presiding officer and subsequently placed in the public docket. The FAA requests that persons participating in the meeting provide 10 copies of all materials to be presented for distribution to the panel members; other copies may be provided to the audience at the discretion of the participant.

9. Statements made by members of the public meeting panel are intended to facilitate discussion of the issues or to clarify issues. Because the meeting concerning the commuter NPRM is being held during the comment period, final decisions concerning issues that the public may raise cannot be made at the meeting. FAA officials will, however, ask questions to clarify statements made by the public and to ensure a complete and accurate record. Comments made at this public meeting will be considered by the FAA when deliberations begin concerning whether to adopt any or all of the proposed rules.

10. The meeting is designed to solicit public views and more complete information on the proposed rule. Therefore, the meeting will be conducted in an informal and nonadversarial manner.

Issued in Washington, DC, on May 26, 1995.

Chris A. Cristie,

Director of Rulemaking.

[FR Doc. 95–13483 Filed 5–30–95; 11:57 am]

BILLING CODE 4910–13–M

SOCIAL SECURITY ADMINISTRATION

20 CFR Parts 404 and 410

RIN 0960–AD99

Overpayment Appeal and Waiver Rights

AGENCY: Social Security Administration.

ACTION: Proposed rules.

SUMMARY: In these proposed regulations we address the rights of individuals regarding overpayment and waiver determinations in the Social Security and Black Lung benefits programs by stating policy established as a result of a series of court decisions, beginning with the 1974 court decision in *Buffington, et al.* v. *Weinberger* and including the Supreme Court decision in *Califano* v. *Yamasaki.* The effect of these proposed regulations is to codify these additional rights for overpaid individuals established in these court decisions.

DATES: Comments must be submitted on or before August 1, 1995.

ADDRESSES: Submit your comments as follows: (1) Telefax to (410) 966–2830, (2) mail them to the Social Security Administration, P.O. Box 1585, Baltimore, MD 21235, (3) send by E-mail to ''regulations@ssa.gov'', or (4) deliver them to 3–B–1 Operations Building, 6401 Security Boulevard, Baltimore, MD 21235, between 8:00 a.m. and 4:30 p.m. on regular business days. You may inspect the comments received also during these same hours by making arrangements with the contact person shown below.

The electronic file of this document is available on the Federal Bulletin Board (FBB) at 9 a.m. on the date of publication in the **Federal Register**. To download the file, modem dial (202) 512–1387. The FBB instructions will explain how to download the file and the fee. This file is in WordPerfect and will remain on the FBB during the comment period.

FOR FURTHER INFORMATION CONTACT: Lois Berg, Legal Assistant, 3–B–1 Operations Building, 6401 Security Boulevard, Baltimore, MD 21235, (410) 965–1713 for information about these rules.

SUPPLEMENTARY INFORMATION

Background

Section 204(b) of the Social Security Act (the Act) provides that the Commissioner of Social Security (the Commissioner) shall not recover an Old-Age, Survivors, and Disability Insurance (OASDI) overpayment from any individual who is without fault in causing the overpayment if recovery from that individual would ''defeat the purpose'' of title II of the Act or be ''against equity and good conscience.'' Sections 205(a) and 1102(a) of the Act authorize the issuance of regulations regarding our overpayment recovery policies.

Sections 411(b) and 426(a) of the Black Lung Benefits Act (30 U.S.C. 921(b) and 936(a)), authorize the Commissioner to issue regulations to administer the provisions of the Black Lung benefit program. The provisions for recovery of an overpayment from an individual under the Black Lung benefit program (Part B) regulations generally parallel the regulations of the OASDI programs.

On October 22, 1974, the U.S. District Court for the Western District of Washington in *Buffington, et al.* v. *Weinberger,* No. 734–73C2, stopped the Social Security Administration (SSA) from recovering overpaid Social Security benefits without first giving each member of the plaintiff class adequate written notice of the overpayment determination and the right to a pre-recoupment hearing.

The court ordered that the written notice must include:

- A statement of the alleged overpayment, an explanation of the basis for the overpayment and SSA's proposed action to recover the overpayment;
- A statement of the individual's right to a pre-recoupment hearing;
- Instructions and forms for requesting a pre-recoupment hearing;
- An explanation that if the individual did not request a pre-recoupment hearing within 30 days of the date of mailing of the overpayment notice, it would be presumed that the individual waived his/her right to the hearing and recovery of the alleged overpayment would begin;
- A statement of any other administrative relief available (i.e., reconsideration of the fact and/or amount of overpayment and waiver of recovery of the overpayment); and
- A statement that an SSA office would help the individual complete and submit forms for appeal or waiver requests.

The court also ordered the following:

1. SSA had to restore all benefits withheld from the named plaintiffs pending an opportunity for a pre-recoupment hearing.

2. Each individual had to be given the opportunity to examine his/her claims file at least 5 days prior to the date of the pre-recoupment hearing.

3. The pre-recoupment hearing had to be conducted by an SSA employee who had no prior knowledge of the events leading to the overpayment determination and the decision to recover the overpayment.

4. At the hearing, the individual had to be given the opportunity to:

- Appear personally, testify, and cross-examine any witnesses;
- Be represented by an attorney or other representative; and
- Submit documents for consideration at the hearing;

The court did not require that a transcript be made of the hearing.

5. After the hearing, SSA had to issue a written decision to the individual (and his/her representative, if any) specifying the findings of fact and conclusions in support of the decision and advising of the individual's right to appeal the decision.

In accordance with the court order, SSA began to issue overpayment notices containing all of the aforementioned information and to offer pre-recoupment hearings to all class members.

On June 20, 1979, the Supreme Court held in *Califano* v. *Yamasaki,* 442 U.S. 682 (1979), that individuals who file a written request for waiver are entitled to the opportunity for a pre-recoupment oral hearing, but those who request only reconsideration are not so entitled. Thereafter, SSA applied revised overpayment notice and pre-recoupment hearing procedures to all individuals determined to be overpaid under the title II or Black Lung benefit programs. On July 31, 1981, the *Buffington* court required SSA to schedule pre-recoupment hearings automatically for individuals whose request for waiver of overpayment recovery could not be approved after initial paper review. On February 10, 1983, the *Buffington* court approved procedures developed by SSA in response to the 1981 decree whereby pre-recoupment hearings would be scheduled automatically but ordered SSA to schedule the hearings through a written notice to the claimant. The scheduling letter had to contain the date, time and place of the hearing; the procedure for reviewing the claims file before the hearing; the procedure for seeking a change in the scheduled date, time, and/or place; and all other information necessary to fully inform the claimant about the pre-recoupment hearing. SSA began to schedule automatically pre-recoupment hearings in writing in April 1983. The court also retained jurisdiction over the matter and prohibited any changes in the overpayment procedures it had approved without prior notification of plaintiffs' counsel and prior approval from the court.

In its order of October 19, 1987, the *Buffington* court approved SSA's plan to transfer waiver decisionmaking authority for Retirement and Survivors Insurance overpayments from the processing centers to the field offices. SSA implemented this change in July 1988.

On April 13, 1994, the *Buffington* court approved a stipulation modifying the court's injunction in this matter. Under the stipulation, plaintiffs agree to withdraw counsel notification and court approval requirements for future changes to SSA overpayment policies. In return, SSA agreed to promulgate a Social Security Ruling (SSR) and then proposed regulations embodying the overpayment requirements set forth in *Yamasaki,* above. SSA published the SSR on July 11, 1994 (59 FR 35378), and is publishing these proposed regulations to fulfill its commitments under the stipulation.

Current Regulations

Our current regulations do not address the adequate notice, face-to-face oral hearing, or appeal step issues noted above. However, SSA has been complying with the court orders described above through program instructions approved by the *Buffington* court.

Regulations Changes

We are restating in regulations the policies enunciated in the court decisions and established in our program instructions. The proposed regulations provide when an overpayment is discovered, we notify the individual immediately. The notice includes:

- The overpayment amount and how and when it occurred;
- A request for full, immediate refund, unless the overpayment can be withheld from the next month's benefit;
- The proposed adjustment of benefits if refund is not received within 30 days after the date of the notice and adjustment of benefits is available;
- An explanation of the availability of a different rate of withholding when full withholding is proposed, installment payments when refund is requested and adjustment is not currently available, and/or cross-program recovery when refund is requested and the individual is receiving another type of payment from SSA (language about cross-program recovery is not included in notices sent to individuals in jurisdictions where this recovery option is not available; currently, cross-program recovery is not available to residents of New York and Pennsylvania);
- An explanation of the right to request waiver of adjustment or recovery and the automatic scheduling of a file review and pre-recoupment hearing (commonly referred to as a personal conference) if a request for waiver cannot be approved after initial paper review;
- An explanation of the right to request reconsideration of the fact and/or amount of the overpayment determination;
- Instructions about the availability of forms for requesting reconsideration and waiver;
- An explanation that if the individual does not request waiver or reconsideration within 30 days of the date of the overpayment notice, adjustment or recovery of the overpayment will begin;
- A statement that an SSA office will help the individual complete and submit forms for appeal or waiver requests; and
- A statement that the individual should notify SSA promptly if reconsideration, waiver, a lesser rate of withholding, repayment by installments or cross-program adjustment is wanted.

Form SSA–3105 (Important Information About Your Appeal and Waiver Rights) is included with each overpayment notice. The SSA–3105 further explains the pre-recoupment review process and contains a tear-off form which the individual may complete and return to SSA if he/she wants reconsideration and/or waiver.

The proposed regulations also provide that to ensure meaningful opportunity to contest the correctness of an overpayment determination and/or establish entitlement to waiver, the date on which full refund is due and, if appropriate, the date on which adjustment will begin must be at least 30 days after the date of the overpayment notice. If the individual responds within 30 days after the date of the overpayment notice, SSA must take action to ensure that benefit payments are not interrupted. Any time waiver is requested, SSA stops adjustment or recovery.

When waiver is requested, the individual gives SSA information (usually on Form SSA–632–BK (Request for Waiver of Overpayment Recovery or Change in Repayment Rate)) to support his/her contention that he/she is without fault in causing the overpayment and that recovery would either cause financial hardship or be inequitable. That information, along with supporting documentation, is reviewed to determine if waiver can be approved.

If waiver cannot be approved after this review, the individual is notified in writing and given the dates, times and place of the file review and personal conference; the procedure for reviewing the claims file prior to the personal conference; the procedure for seeking a change in the scheduled dates, times, and/or place; and all other information necessary to fully inform the individual about the personal conference. The file review is always scheduled at least 5 days before the personal conference.

At the file review, the individual and the individual's representative have the right to review the claims file and applicable law and regulations with the decisionmaker or another SSA representative who is prepared to answer questions. We will provide copies of material related to the overpayment and/or waiver from the claims file or pertinent sections of the law or regulations that are requested by the individual or the individual's representative.

Although the individual may be represented at the personal conference, he/she must also be present. This requirement is consistent with the Supreme Court's reasoning in *Califano* v. *Yamasaki.* In Yamasaki, the Court concluded that written review could not satisfy SSA's obligation to make an accurate waiver determination, because an evaluation of fault requires an evaluation of all pertinent circumstances, such as the recipient's intelligence, and physical and mental condition. The court said, ''We do not see how these can be evaluated absent personal contact between the recipient and the person who decides his case.'' Id. at 698.

SSA will provide suitable private space for the personal conference. However, if the individual cannot come to the conference site for a legitimate reason (e.g., he/she is incapacitated), SSA personnel will travel as far as necessary to conduct the conference.

At the personal conference, the individual is given the opportunity to:

- Appear personally, testify, cross-examine any witnesses, and make arguments;
- Be represented by an attorney or other representative, although the individual must be present at the conference; and
- Submit documents for consideration by the decisionmaker. At the personal conference, the decisionmaker:
- Tells the individual that the decisionmaker was not previously involved in the issue under review, that the waiver decision is solely the decisionmaker's, and that the waiver

decision is based only on the evidence or information presented or reviewed at the conference;

- Ascertains the role and identity of everyone present;
- Indicates whether or not the individual reviewed the claims file;
- Explains the provisions of law and regulations applicable to the issue;
- Briefly summarizes the evidence already in file which will be considered;
- Ascertains from the individual whether the information presented is correct and whether he/she fully understands it;
- Allows the individual and the individual's representative, if any, to present the individual's case;
- Secures updated financial information and verification, if necessary;
- Allows each witness to present information and allows the individual and the individual's representative to question each witness;
- Ascertains whether there is any further evidence to be presented;
- Reminds the individual of any evidence promised by the individual which has not been presented;
- Lets the individual and the individual's representative, if any, present any proposed summary or closing statement;
- Explains that a decision will be made and the individual will be notified in writing; and
- Explains further appeal rights in the event the decision is adverse to the individual.

SSA issues a written decision to the individual (and his/her representative, if any) specifying the findings of fact and conclusions in support of the decision to approve or deny waiver and advising of the individual's right to appeal the decision. If waiver is denied, adjustment or recovery of the overpayment begins even if the individual appeals.

If it appears that the waiver cannot be approved, and the individual declines a personal conference or fails to appear for a second scheduled personal conference, a decision regarding the waiver will be made based on the written evidence of record. Reconsideration is then the next step in the appeals process.

The proposed regulations also state that although a personal conference decision on the waiver issue is an initial determination, when an individual is appealing an initial determination of waiver denial based on a personal conference, the first appeal step is an Administrative Law Judge (ALJ) hearing, bypassing the reconsideration which generally follows initial determinations. We provide that the appeal goes directly to an ALJ hearing in this situation because a reconsideration is a review of the written evidence and would be less comprehensive in scope than the preceding personal conference. However, where an individual is appealing an initial determination of waiver denial based solely on a review of the written evidence rather than a personal conference (i.e., the individual chose to forego the personal conference) the first appeal step is a reconsideration.

Additionally, an individual may concurrently appeal the substantive determination that the overpayment occurred and request waiver of recovery of the overpayment. We provide that when the substantive determination is upheld on reconsideration and the waiver is denied, even if it is denied solely on the basis of a review of the written evidence, the next step in the appeal process for both determinations is an ALJ hearing.

In addition to revising the regulations to codify the policy established in these court decisions, we are also removing references to title XVIII from §§ 404.502a and 404.506. These references address Medicare overpayment situations, which fall within the purview of the Health Care Financing Administration (HCFA). Prior to becoming a separate agency, SSA was responsible for both the social security cash benefit program and the Medicare program. Consequently, HCFA has historically relied on many of SSA's regulations that addressed similar situations under titles II and XVIII of the Act. The recoupment of overpayments has been one of these situations. However, as differences in the two programs have increased, the applicability of SSA regulations to Medicare overpayment situations has diminished. As a result, HCFA is in the process of promulgating its own regulations with regard to Medicare overpayments. Therefore, we are removing the references to title XVIII from the regulations text of these proposed regulations. However, until HCFA's regulations are published as final, the to-be-superseded SSA procedures will continue to apply to title XVIII (Medicare) overpayments.

Regulatory Procedures

Executive Order 12866

We have consulted with the Office of Management and Budget (OMB) and determined that these regulations do not meet the criteria for a significant regulatory action under Executive Order 12866. Thus, they were not subject to OMB review.

Paperwork Reduction Act of 1980

These proposed regulations impose no new reporting or recordkeeping requirements which are subject to review by OMB.

Regulatory Flexibility Act

We certify that these proposed regulations, if promulgated, will not have a significant economic impact on a substantial number of small entities because they affect only individuals. Therefore, a regulatory flexibility analysis as provided in Public Law 96–354, the Regulatory Flexibility Act, is not required.

(Catalog of Federal Domestic Assistance: Program Nos. 93.802, Social Security—Disability insurance; 93.803, Social Security—Retirement Insurance; 93.805, Social Security—Survivors Insurance; and 93.806, Special Benefits for Disabled Coal Miners)

List of Subjects

20 CFR Part 404

Administrative practice and procedure; Death benefits; Old-Age, Survivors, and Disability insurance; Reporting and recordkeeping requirements.

20 CFR Part 410

Administrative practice and procedure; Black lung benefits; Death benefits; Disability benefits; Miners; Reporting and recordkeeping requirements.

Dated: May 23, 1995.

Approved:

Shirley Chater,

Commissioner of Social Security.

For the reasons set out in the preamble, Parts 404 and 410 of Chapter III of Title 20 of the Code of Federal Regulations are proposed to be amended as follows.

PART 404—FEDERAL OLD-AGE, SURVIVORS AND DISABILITY INSURANCE (1950–)

Subpart F—[Amended]

1. The authority citation for subpart F of part 404 continues to read as follows:

Authority: Secs. 204(a)–(d), 205(a), and 1102 of the Social Security Act; 31 U.S.C. 3720A; 42 U.S.C. 404(a)–(d), 405(a), and 1302.

2. Section 404.502a is revised to read as follows:

§ 404.502a Notice of right to waiver consideration.

Whenever an initial determination is made that more than the correct amount of payment has been made, and we seek

adjustment or recovery of the overpayment, the individual from whom we are seeking adjustment or recovery is immediately notified. The notice includes:

(a) The overpayment amount and how and when it occurred;

(b) A request for full, immediate refund, unless the overpayment can be withheld from the next month's benefit;

(c) The proposed adjustment of benefits if refund is not received within 30 days after the date of the notice and adjustment of benefits is available;

(d) An explanation of the availability of a different rate of withholding when full withholding is proposed, installment payments when refund is requested and adjustment is not currently available, and/or cross-program recovery when refund is requested and the individual is receiving another type of payment from SSA (language about cross-program recovery is not included in notices sent to individuals in jurisdictions where this recovery option is not available);

(e) An explanation of the right to request waiver of adjustment or recovery and the automatic scheduling of a file review and pre-recoupment hearing (commonly referred to as a personal conference) if a request for waiver cannot be approved after initial paper review;

(f) An explanation of the right to request reconsideration of the fact and/or amount of the overpayment determination;

(g) Instructions about the availability of forms for requesting reconsideration and waiver;

(h) An explanation that if the individual does not request waiver or reconsideration within 30 days of the date of the overpayment notice, adjustment or recovery of the overpayment will begin;

(i) A statement that an SSA office will help the individual complete and submit forms for appeal or waiver requests; and

(j) A statement that the individual receiving the notice should notify SSA promptly if reconsideration, waiver, a lesser rate of withholding, repayment by installments or cross-program adjustment is wanted.

3. Section 404.506 is revised to read as follows:

§ 404.506 When waiver may be applied and how to process the request.

(a) Section 204(b) of the Act provides that there shall be no adjustment or recovery in any case where an overpayment under title II has been made to an individual who is without fault if adjustment or recovery would either defeat the purpose of title II of the Act, or be against equity and good conscience.

(b) If an individual requests waiver of adjustment or recovery of a title II overpayment within 30 days after receiving a notice of overpayment that contains the information in § 404.502a, no adjustment or recovery action will be taken until after the initial waiver determination is made. If the individual requests waiver more than 30 days after receiving the notice of overpayment, SSA will stop any adjustment or recovery actions until after the initial waiver determination is made.

(c) When waiver is requested, the individual gives SSA information to support his/her contention that he/she is without fault in causing the overpayment (see § 404.507) and that adjustment or recovery would either defeat the purpose of title II of the Act (see § 404.508) or be against equity and good conscience (see § 404.509). That information, along with supporting documentation, is reviewed to determine if waiver can be approved. If waiver cannot be approved after this review, the individual is notified in writing and given the dates, times and place of the file review and personal conference; the procedure for reviewing the claims file prior to the personal conference; the procedure for seeking a change in the scheduled dates, times, and/or place; and all other information necessary to fully inform the individual about the personal conference. The file review is always scheduled at least 5 days before the personal conference.

(d) At the file review, the individual and the individual's representative have the right to review the claims file and applicable law and regulations with the decisionmaker or another SSA representative who is prepared to answer questions. We will provide copies of material related to the overpayment and/or waiver from the claims file or pertinent sections of the law or regulations that are requested by the individual or the individual's representative.

(e) At the personal conference, the individual is given the opportunity to:

(1) Appear personally, testify, cross-examine any witnesses, and make arguments;

(2) Be represented by an attorney or other representative (see § 404.1700), although the individual must be present at the conference; and

(3) Submit documents for consideration by the decisionmaker.

(f) At the personal conference, the decisionmaker:

(1) Tells the individual that the decisionmaker was not previously involved in the issue under review, that the waiver decision is solely the decisionmaker's, and that the waiver decision is based only on the evidence or information presented or reviewed at the conference;

(2) Ascertains the role and identity of everyone present;

(3) Indicates whether or not the individual reviewed the claims file;

(4) Explains the provisions of law and regulations applicable to the issue;

(5) Briefly summarizes the evidence already in file which will be considered;

(6) Ascertains from the individual whether the information presented is correct and whether he/she fully understands it;

(7) Allows the individual and the individual's representative, if any, to present the individual's case;

(8) Secures updated financial information and verification, if necessary;

(9) Allows each witness to present information and allows the individual and the individual's representative to question each witness;

(10) Ascertains whether there is any further evidence to be presented;

(11) Reminds the individual of any evidence promised by the individual which has not been presented;

(12) Lets the individual and the individual's representative, if any, present any proposed summary or closing statement;

(13) Explains that a decision will be made and the individual will be notified in writing; and

(14) Explains repayment options and further appeal rights in the event the decision is adverse to the individual.

(g) SSA issues a written decision to the individual (and his/her representative, if any) specifying the findings of fact and conclusions in support of the decision to approve or deny waiver and advising of the individual's right to appeal the decision. If waiver is denied, adjustment or recovery of the overpayment begins even if the individual appeals.

(h) If it appears that the waiver cannot be approved, and the individual declines a personal conference or fails to appear for a second scheduled personal conference, a decision regarding the waiver will be made based on the written evidence of record. Reconsideration is then the next step in the appeals process (but see § 404.930(a)(7)).

Subpart J—[Amended]

4. The authority citation for subpart J of part 404 continues to read as follows:

Authority: Secs. 201(j), 205(a), (b), and (d)–(h), 221(d), and 1102 of the Social Security

Act; 31 U.S.C. 3720A; 42 U.S.C. 401(j), 405(a), (b), and (d)–(h), 421(d), and 1302; sec. 5 of Pub. L. 97–455, 96 Stat. 2500; sec. 6 of Pub. L. 98–460, 98 Stat. 1802.

5. Section 404.907 is revised to read as follows:

§ 404.907 Reconsideration-general.

If you are dissatisfied with the initial determination, reconsideration is the first step in the administrative review process that we provide, except that we provide the opportunity for a hearing before an administrative law judge as the first step for those situations described in § 404.930(a)(6) and (a)(7), where you appeal an initial determination denying your request for waiver of adjustment or recovery of an overpayment (see § 404.506). If you are dissatisfied with our reconsidered determination, you may request a hearing before an administrative law judge.

6. Section 404.930 is amended by removing the word ''or'' at the end of (a)(4) and the period at the end of (a)(5), and adding a semicolon in its place and adding (a)(6) and (a)(7) as follows:

§ 404.930 Availability of a hearing before an administrative law judge.

(a) * * *

(6) An initial determination denying waiver of adjustment or recovery of an overpayment based on a personal conference (see § 404.506); or

(7) An initial determination denying waiver of adjustment or recovery of an overpayment based on a review of the written evidence of record (see § 404.506), and the determination was made concurrent with, or subsequent to, our reconsideration determination regarding the underlying overpayment but before an ALJ holds a hearing.

* * * * *

PART 410—FEDERAL COAL MINE HEALTH AND SAFETY ACT OF 1969, TITLE IV—BLACK LUNG BENEFITS (1969–)

Subpart E—[Amended]

7. The authority citation for subpart E of part 410 is revised to read as follows:

Authority: Secs. 411(a), 412(a) and (b), 413(b), 426(a), and 508 of the Federal Mine Health and Safety Act of 1969, as amended; 30 U.S.C. 921(a), 922(a) and (b), 923(b), 936(a), and 957; sec 410.565 also issued under sec. 3, 80 Stat. 309, 31 U.S.C. 952, unless otherwise noted.

8. Section 410.561 is revised to read as follows:

§ 410.561 Notice of right to waiver consideration.

When we seek adjustment or recovery of an overpayment, the individual from whom we are seeking adjustment or recovery is immediately notified. The notice includes:

(a) The overpayment amount and how and when it occurred;

(b) A request for full, immediate refund, unless the overpayment can be withheld from the next month's benefit;

(c) The proposed adjustment of benefits if refund is not received within 30 days after the date of the notice and adjustment of benefits is available;

(d) An explanation of the availability of a different rate of withholding when full withholding is proposed, installment payments when refund is requested and adjustment is not currently available, and/or cross-program recovery when refund is requested and the individual is receiving another type of payment from SSA (language about cross-program recovery is not included in notices sent to individuals in jurisdictions where this recovery option is not available);

(e) An explanation of the right to request waiver of adjustment or recovery and the automatic scheduling of a file review and pre-recoupment hearing (commonly referred to as a personal conference) if a request for waiver cannot be approved after initial paper review;

(f) An explanation of the right to request reconsideration of the fact and/or amount of the overpayment determination;

(g) Instructions about the availability of forms for requesting reconsideration and waiver;

(h) An explanation that if the individual does not request waiver or reconsideration within 30 days of the date of the overpayment notice, adjustment or recovery of the overpayment will begin;

(i) A statement that an SSA office will help the individual complete and submit forms for appeal or waiver requests; and

(j) A statement that the individual receiving the notice should notify SSA promptly if reconsideration, waiver, a lesser rate of withholding, repayment by installments or cross-program adjustment is wanted.

9. Section 410.561a is revised to read as follows:

§ 410.561a When waiver may be applied and how to process the request.

(a) There shall be no adjustment or recovery in any case where an overpayment under part B of title IV of the Act has been made to an individual who is without fault if adjustment or recovery would either defeat the purpose of title IV of the Act, or be against equity and good conscience.

(b) If an individual requests waiver of adjustment or recovery of an overpayment made under part B of title IV within 30 days after receiving a notice of overpayment that contains the information in § 410.561, no adjustment or recovery action will be taken until after the initial waiver determination is made. If the individual requests waiver more than 30 days after receiving the notice of overpayment, SSA will stop any adjustment or recovery actions until after the initial waiver determination is made.

(c) When waiver is requested, the individual gives SSA information to support his/her contention that he/she is without fault in causing the overpayment (see § 410.561b), and that adjustment or recovery would either defeat the purposes of this subpart (see § 410.561c) or be against equity and good conscience (see § 410.561d). That information, along with supporting documentation, is reviewed to determine if waiver can be approved. If waiver cannot be approved after this review, the individual is notified in writing and given the dates, times and place of the file review and personal conference; the procedure for reviewing the claims file prior to the personal conference; the procedure for seeking a change in the scheduled dates, times, and/or place; and all other information necessary to fully inform the individual about the personal conference. The file review is always scheduled at least 5 days before the personal conference.

(d) At the file review, the individual and the individual's representative have the right to review the claims file and applicable law and regulations with the decisionmaker or another SSA representative who is prepared to answer questions. We will provide copies of material related to the overpayment and/or waiver from the claims file or pertinent sections of the law or regulations that are requested by the individual or the individual's representative.

(e) At the personal conference, the individual is given the opportunity to:

(1) Appear personally, testify, cross-examine any witnesses, and make arguments;

(2) Be represented by an attorney or other representative (see § 410.684), although the individual must be present at the conference; and

(3) Submit documents for consideration by the decisionmaker.

(f) At the personal conference, the decisionmaker:

(1) Tells the individual that the decisionmaker was not previously involved in the issue under review, that the waiver decision is solely the decisionmaker's, and that the waiver decision is based only on the evidence or information presented or reviewed at the conference;

(2) Ascertains the role and identity of everyone present;

(3) Indicates whether or not the individual reviewed the claims file;

(4) Explains the provisions of law and regulations applicable to the issue;

(5) Briefly summarizes the evidence already in file which will be considered;

(6) Ascertains from the individual whether the information presented is correct and whether he/she fully understands it;

(7) Allows the individual and the individual's representative, if any, to present the individual's case;

(8) Secures updated financial information and verification, if necessary;

(9) Allows each witness to present information and allows the individual and the individual's representative to question each witness;

(10) Ascertains whether there is any further evidence to be presented;

(11) Reminds the individual of any evidence promised by the individual which has not been presented;

(12) Lets the individual and the individual's representative, if any, present any proposed summary or closing statement;

(13) Explains that a decision will be made and the individual will be notified in writing; and

(14) Explains repayment options and further appeal rights in the event the decision is adverse to the individual.

(g) SSA issues a written decision to the individual (and his/her representative, if any) specifying the findings of fact and conclusions in support of the decision to approve or deny waiver and advising of the individual's right to appeal the decision. If waiver is denied, adjustment or recovery of the overpayment begins even if the individual appeals.

(h) If it appears that the waiver cannot be approved, and the individual declines a personal conference or fails to appear for a second scheduled personal conference, a decision regarding the waiver will be made based on the written evidence of record. Reconsideration is then the next step in the appeals process (but see § 410.630(c)).

Subpart F—[Amended]

10. The authority citation for subpart F of part 410 is revised to read as follows:

Authority: Secs. 413(b), 426(a), 507, and 508 of the Federal Mine Health and Safety Act of 1969, as amended; 30 U.S.C. 923(b), 936(a), 956, and 957.

11. Section 410.623 is revised to read as follows:

§ 410.623 Reconsideration; right to reconsideration.

(a) We shall reconsider an initial determination if a written request for reconsideration is filed, as provided in § 410.624, by or for the party to the initial determination (see § 410.610). We shall also reconsider an initial determination if a written request for reconsideration is filed, as provided in § 410.624, by an individual as a widow, child, parent, brother, sister, or representative of a decedent's estate, who makes a showing in writing that his or her rights with respect to benefits may be prejudiced by such determination.

(b) Reconsideration is the first step in the administrative review process that we provide for an individual dissatisfied with the initial determination, except that we provide the opportunity for a hearing before an administrative law judge as the first step for those situations described in § 410.630 (b) and (c), where an individual appeals an initial determination denying waiver of adjustment or recovery of an overpayment (see § 410.561a).

12. Section 410.630 is revised to read as follows:

§ 410.630 Hearing; right to hearing.

An individual referred to in §§ 410.632 or 410.633 who has filed a written request for a hearing under the provisions in § 410.631 has a right to a hearing if:

(a) An initial determination and reconsideration of the determination have been made by the Social Security Administration concerning a matter designated in § 410.610;

(b) An initial determination denying waiver of adjustment of recovery of an overpayment based on a personal conference has been made by the Social Security Administration (see § 410.561a); or

(c) An initial determination denying waiver of adjustment or recovery of an overpayment based on a review of the written evidence of record has been made by the Social Security Administration (see § 410.561a) and the determination was made concurrent with, or subsequent to, our reconsideration determination regarding the underlying overpayment but before an ALJ holds a hearing.

[FR Doc. 95–13453 Filed 6–1–95; 8:45 am]

BILLING CODE 4190–29–P

ENVIRONMENTAL PROTECTION AGENCY

40 CFR Part 52

[NC59–2–6942b; NC55–1–6497b; NC54–1–6496b: FRL–5207–4]

Approval and Promulgation of Air Quality Implementation Plans; North Carolina; Basic Motor Vehicle Inspection and Maintenance Program

AGENCY: Environmental Protection Agency (EPA).

ACTION: Proposed rule.

SUMMARY: The EPA proposes to approve the state implementation plan (SIP) revisions submitted on May 19, 1994, January 17, 1992, September 24, 1992, and August 5, 1994, by the State of North Carolina, through the North Carolina Department of Environmental Management. This revision modifies the implementation of a basic motor vehicle inspection and maintenance (I/M) program in the areas of Charlotte, Raleigh/Durham, and Winston-Salem, North Carolina. In the final rules section of this **Federal Register**, the EPA is approving the State's SIP revision as a direct final rule without prior proposal because the Agency views this as a noncontroversial revision amendment and anticipates no adverse comments. A detailed rationale for the approval is set forth in the direct final rule. If no adverse comments are received in response to this proposed rule, no further activity is contemplated in relation to this proposed rule. If EPA receives adverse comments, the direct final rule will be withdrawn and all public comments received will be addressed in a subsequent final rule based on this proposed rule. The EPA will not institute a second comment period on this document. Any parties interested in commenting on this document should do so at this time.

DATES: To be considered, comments must be received by July 3, 1995.

ADDRESSES: Written comments on this action should be addressed to: Benjamin Franco at the EPA Regional office listed below.

Copies of the documents relative to this action are available for public inspection during normal business hours at the following locations. The

interested persons wanting to examine these documents should make an appointment with the appropriate office at least 24 hours before the visiting day.

Air and Radiation Docket and Information Center (Air Docket), U.S. Environmental Protection Agency, 401 M Street, SW, Washington, DC 20460.

Environmental Protection Agency, Region 4, Air Programs Branch, 345 Courtland Street, NE, Atlanta, Georgia 30365.

Department of Environment, Health, and Natural Resources, P.O. Box 29535, Raleigh, North Carolina, 27626–0535.

FURTHER INFORMATION CONTACT: Benjamin Franco, Mobile Source Planning Unit, Regulatory Planning and Development Section, Air Programs Branch, Air, Pesticides & Toxics Management Division, Environmental Protection Agency, Region 4, 345 Courtland Street, NE, Atlanta, Georgia 30365. The telephone number is 404/347–3555, extension 4211.

SUPPLEMENTARY INFORMATION: For additional information see the direct final rule which is published in the rules section of this **Federal Register**.

Dated: May 3, 1995.

Patrick M. Tobin,

Acting Regional Administrator.

[FR Doc. 95–13463 Filed 6–1–95; 8:45 am]

BILLING CODE 6560–50–P

---

40 CFR Part 52

[MI42–01–702b; FRL 5213–4]

Determination of Attainment of Ozone Standard by Grand Rapids and Muskegon, MI; Determination Regarding Applicability of Certain Reasonable Further Progress and Attainment Demonstration Requirements

AGENCY: United States Environmental Protection Agency (USEPA).

ACTION: Proposed rule.

SUMMARY: The USEPA proposes to determine that the Grand Rapids (Kent and Ottawa Counties) and Muskegon (Muskegon County) ozone nonattainment areas have attained the National Ambient Air Quality Standard (NAAQS) for ozone and that certain reasonable further progress and attainment demonstration requirements, along with certain related requirements, of part D of title I of the Clean Air Act are not applicable for so long as the area continues to attain the ozone standard. In the final rules section of this **Federal Register**, USEPA is making these determinations without prior proposal. A detailed rationale for the action is set forth in the direct final rule. If no adverse comments are received in response to that direct final rule, no further activity is contemplated in relation to this proposed rule. If USEPA receives adverse comments, USEPA will withdraw the direct final rule and address the comments in a subsequent final rule based on this proposed rule. USEPA will not institute a second comment period on this action. Any parties interested in commenting on this action should do so at this time.

DATES: Comments on this action must be received by July 3, 1995.

ADDRESSES: Written comments should be mailed to: Carlton T. Nash, Chief, Regulation Development Section, Air Toxics and Radiation branch (AT–18J), United States Environmental Protection Agency, 77 West Jackson boulevard, Chicago, Illinois 60604.

A copy of the air quality data and EPA's analysis are available for inspection at the following address: Regulation Development Section, Air Toxics and Radiation Branch (AT–18J), United States Environmental Protection Agency, 77 West Jackson Boulevard, Chicago, Illinois 60604. (It is recommended that you telephone Madelin Rucker at (312) 886–0661 before visiting the Region 5 office.)

FOR FURTHER INFORMATION CONTACT: Madelin Rucker, Telephone: (312) 886–0661.

SUPPLEMENTARY INFORMATION: For additional information, see the direct final rule published in the Final Rules section of this **Federal Register**.

Dated: May 18, 1995.

Valdas V. Adamkus,

Regional Administrator.

[FR Doc. 95–3460 Filed 6–1–95; 8:45 am]

BILLING CODE 6560–50–M

DEPARTMENT OF THE INTERIOR

Office of the Secretary

43 CFR Part 11

RIN 1090–AA23

Natural Resource Damage Assessments: Type A Procedure for Coastal and Marine Environments

AGENCY: Department of the Interior.

ACTION: Proposed rule; availability of technical reports.

SUMMARY: This document announces the availability of technical reports relating to the Department of the Interior's December 8, 1994, notice of proposed rulemaking to revise the natural resource damage assessment regulations. 59 FR 63300. The natural resource damage assessment regulations establish procedures for assessing damages for injury to natural resources resulting from a discharge of oil or hazardous substance into navigable waters under the Clean Water Act, or a release of a hazardous substance under the Comprehensive Environmental Response, Compensation, and Liability Act. The December 8, 1994, document proposed revisions to a simplified ''type A'' procedure for assessing damages from relatively minor discharges or releases in coastal and marine environments. That proposed assessment procedure incorporates the use of a computer model named the Natural Resource Damage Assessment Model for Coastal and Marine Environments (NRDAM/CME), Version 2.2. The Department has arranged for a number of technical specialists to conduct independent reviews of the proposed NRDAM/CME, Version 2.2 and is making those technical reports available for public review.

ADDRESSES: Copies of the reports are available for inspection at the Office of Environmental Policy and Compliance, Room 2243, Department of the Interior, 1849 C Street, NW, Washington, DC 20240, tel: (202) 208–3301 (regular business hours 7:45 a.m. to 4:15 p.m., Monday through Friday).

FOR FURTHER INFORMATION CONTACT: Mary Morton, Office of Environmental Policy and Compliance, Department of the Interior, MS 2340, 1849 C Street, NW, Washington, DC 20240, (202), tel: 208–3301 or MMORTON@IOS.DOI.GOV on Internet.

SUPPLEMENTARY INFORMATION: The natural resource damage assessment regulations establish procedures that Federal, State, and Tribal natural resource trustees may use to obtain compensation from liable parties for natural resource injuries under the Comprehensive Environmental Response, Compensation, and Liability Act, as amended (42 U.S.C. 9601 *et seq.*) and the Clean Water Act, as amended (33 U.S.C. 1251 *et seq.*). The regulations provide an administrative process for conducting assessments as well as two types of technical procedures for the actual determination of injuries and damages. ''Type A'' procedures are standard procedures for simplified assessments requiring minimal field observation in cases of minor discharges or releases in certain environments. ''Type B'' procedures are site-specific

procedures for detailed assessments in other cases.

On December 8, 1994, the Department published a proposed rule to revise the type A procedure for coastal and marine environments, in compliance with a court order and a statutory biennial review requirement. 59 FR 63300. The proposed revised type A procedure for coastal and marine environments incorporates a computer model called the Natural Resource Damage Assessment Model for Coastal and Marine Environments Version 2.2 (NRDAM/CME). The comment period on the December 8, 1994, proposed rule has been extended until July 6, 1995. 60 FR 7155.

NOAA is responsible for developing natural resource damage assessment regulations under the Oil Pollution Act (OPA). 33 U.S.C. 2701 *et seq.* On January 7, 1994, NOAA published a proposed rule and indicated that it may allow for use of the revised NRDAM/CME under its OPA regulations after the Department publishes a final rule. 59 FR 1062, 1124–1125.

The Department and NOAA have arranged for a number of technical specialists to conduct independent reviews of the proposed NRDAM/CME. These reports are under evaluation by the Department and are being included in the administrative record for the rulemaking. Anyone interested in reviewing the reports is encouraged to contact the Department.

Dated: May 30, 1995.

Willie R. Taylor,

Director, Office of Environmental Policy and Compliance.

[FR Doc. 95–13557 Filed 6–1–95; 8:45 am]

BILLING CODE 4310–RG–P

FEDERAL COMMUNICATIONS COMMISSION

47 CFR Part 61

[CC Docket No. 87–313 and 93–197, FCC 95–198]

Rates for Dominant Carriers: Revisions to Price Cap Rules for AT&T

AGENCY: Federal Communications Commission.

ACTION: Proposed rule.

SUMMARY: This action seeks comment on proposed revisions to the price cap rules that would redefine AT&T Corp.'s promotional tariffs and optional calling plans as alternative pricing plans (APPs) for domestic residential MTS. The proposed rule would allow AT&T to file APPs outside of price caps initially on a streamlined basis and to receive price cap credit for these services on a more expedited basis than the new services rules currently provide, while requiring it to calculate index credit based on historical data, rather than forecasts. These revised rules would simplify review of AT&T's price cap tariff filings and would accord AT&T greater pricing flexibility in the increasingly competitive interexchange market.

DATES: Comments must be filed on or before July 3, 1995, and reply comment on or before July 24, 1995.

ADDRESS: Federal Communications Commissions, 1919 M Street, NW., Washington, DC 20554.

FOR FURTHER INFORMATION CONTACT: Jane Gross, tel: 202–418–1556.

SUPPLEMENTARY INFORMATION: This is a summary of the Commission's Further notice of Proposed Rulemaking in CC Docket Nos. 87–313 and 93–197, FCC 95–198, adopted May 5, 1995, and released May 18, 1995. This document requests comments on the regulatory treatment that the Commission should accord to AT&T Corp.'s promotional tariffs and OCPs, as well as similar discounts for the remaining AT&T services in Basket 1. The Commission seeks comment regarding its tentative conclusion to redefine AT&T Corp's promotional tariffs and OCPs as alternative callings plans (APPs) for the domestic MTS service category, as well as whether it should modify its rules to allow AT&T to file APPs outside of price caps initially on a streamlined basis and to receive price cap credit for these services on a more expedited basis than the new services rules currently provide. The Commission requests comment on whether it should reduce the existing Basket 1 service categories to three service categories: (1) Domestic MTS, including all three current time-of-day MTS categories, OCPs in the existing domestic ReachOut America category, and domestic MTS promotions; (2) operator and credit card services; and (3) international MTS; and whether it should modify the service category bands applicable to the existing residential service categories affected to impose a four-percent upper limit and a 15 percent lower limit on the domestic MTS service category band. The Commission is also seeking comment on whether there is a need to limit AT&T's ability to raise the basic schedule or rates for domestic MTS, and, if so, what methods the Commission should use to impose such limits. Finally, the Commission seeks comment on whether it should revise the rule for AT&T for PCI changes based on changes in exogenous costs arising from GAAP accounting changes to resemble the rules recently adopted in the review of price cap regulation for local exchange carriers, the Price Cap Performance Review for Local Exchange Carriers, CC Docket No. 94–1, FCC 95–132, (rel. April 7, 1995) (60 FR 19,526, April 19, 1995).

The full text of this Commission proposal is available for inspection and copying during normal business hours in the FCC Reference Center (Room 230), 1919 M Street, NW, Washington, DC. The complete text of this proposal may also be purchased from the Commission's copy contractor, International Transcription Services, Inc., (202) 857–3800, 2100 M Street, NW, Washington, DC 20037.

Paperwork Reduction Act

The revisions contained herein have been analyzed with respect to the Paperwork Reduction Act of 1980 and found not to impose new or modified information collection and/or recordkeeping, labeling, disclosure or record retention requirements and will not increase burden hours imposed on the public.

Regulatory Flexibility Act

As required by Section 603 of the Regulatory Flexibility Act, the Commission has prepared an Initial Regulatory Flexibility Analyses (IFRA) of the expected impact on small entities of the proposals suggested in this document. The IRFA is set forth in Section V. Written public comments are requested on the IFRA. These comments must be filed in accordance with the same filing deadlines as comments on the rest of the Notice, but they must have a separate and distinct heading designating them as responses to the Initial Regulatory Flexibility Analysis. The Secretary shall send a copy of this Notice of Proposed Rulemaking, including the Initial Regulatory Flexibility Analysis, to the Chief Counsel for Advocacy of the Small Business Administration in accordance with paragraph 603(a) of the Regulatory Flexibility Act. Public Law 96–354, 94 Stat. 1164, 5 U.S.C. section 601 *et seq.* (1981).

Ex Parte

This is a non-restricted notice and comment rulemaking proceeding. Written and/or oral *ex parte* presentations are permitted except during the Sunshine Agenda period, provided they are disclosed as provided in Commission rules. See generally, 47 CFR 1.1202, 1.1203, and 1.1206(a).

List of Subjects in 47 CFR Part 61

Communications common carriers.

Federal Communications Commission.

William F. Caton,

Acting Secretary.

[FR Doc. 95–13498 Filed 6–1–95; 8:45 am]

BILLING CODE 6712–01–M

---

47 CFR Part 64

[CC Docket No. 91–281, FCC 95–187]

Calling Number Identification Service—Caller ID

AGENCY: Federal Communications Commission.

ACTION: Third notice of proposed rulemaking.

SUMMARY: Notice is hereby given that in a Third Notice of Proposed Rulemaking on Rules and Policies Regarding Calling Number Identification Service—Caller ID, adopted May 4, 1995, the Commission proposed that Private Branch Exchange (PBX) systems and private payphones capable of delivering Calling Party Number (CPN) to the public switched telephone network also be capable of: Delivering a privacy indicator when the user of a telephone served by the PBX or private payphone dials *67, and unblocking the transmission of their CPN when the user dials *82.

DATES: Comments are due on or before June 30, 1995, and reply comments are due on or before July 28, 1995.

FOR FURTHER INFORMATION CONTACT: Marian Gordon (202/634–4215) or Mike Specht (202/634–1816), Domestic Facilities Division, Common Carrier Bureau.

SUPPLEMENTARY INFORMATION: The above actions were taken pursuant to Sections 1, 4(i) and (j), 201–205, 218 of the Communications Act as amended, 47 U.S.C. 151, 154(i), 151(j), 201–205, and 218. The Commission takes this action to ensure that the privacy expectations of users of such equipment will be honored. If PBX or private payphones can pass CPN to the public switched network, but do not enable callers using telephones connected to the PBX to indicate a privacy request to switches in the public network, the Commission believes it creates risk to calling parties that must be addressed.

List of Subjects in 47 CFR Part 64

Calling party telephone number and privacy, Communications common carriers.

Federal Communications Commission.

William F. Caton,

Acting Secretary.

[FR Doc. 95–13497 Filed 6–1–95; 8:45 am]

BILLING CODE 6712–01–M

---

47 CFR Part 80

[CI Docket No. 95–55, FCC 95–171]

Inspection of Radio Installations on Large Cargo and Small Passenger Ships

AGENCY: Federal Communications Commission.

ACTION: Notice of Inquiry.

SUMMARY: The Commission has adopted a Notice of Inquiry (Notice) which begins a proceeding to review the Commission's current Rules regarding the inspection of ships for compliance with the Communications Act of 1934 (Communications Act) and the International Convention for the Safety of Life at Sea, 1974 (Safety Convention).

DATES: Comments must be filed on or before July 18, 1995, and reply comments must be filed on or before August 17, 1995.

ADDRESSES: Federal Communications Commission, 1919 M Street, NW., Washington, DC 20554.

FOR FURTHER INFORMATION CONTACT: George R. Dillon of the Compliance and Information Bureau at (202) 418–1100.

SUPPLEMENTARY INFORMATION: This is a summary of the Commission's Notice of Inquiry, CI Docket No. 95–55, FCC 95–171, adopted April 24, 1995, and released, May 16, 1995, The full text of this Notice of Inquiry is available for inspection and copying during normal business hours in the FCC Reference Center (Room 239) 1919 M Street, NW, Washington, DC. The complete text may be purchased from the Commission's copy contractor, International Transcription Services, 2100 M Street NW, Washington, DC 20037, telephone (202) 857–3800.

Summary of Notice of Inquiry

1. The Commission is recommending amendments to the Communications Act that allows early implementation of the Global Maritime and Distress System (GMDSS) and that will permit changes to the way we inspect large cargo vessels and small passenger vessels. This notice begins a proceeding to review the Commission's current Rules regarding the inspection of ships for compliance with the Communications Act of 1934 (Communications Act) and the International Convention for the Safety of Life at Sea, 1974 (Safety Convention). We seek information that will allow us to streamline ship inspection procedures for the maritime services, to remove unnecessary rules, to improve service to the maritime community, and, above all else, to preserve maritime safety.

2. This Notice is the initial step to develop and implement an overall strategy to improve the manner in which we conduct inspections without derogating the safety of life at sea.

3. Commission inspectors currently conduct a thorough inspection of all of a ship's required radio equipment, from simple VHF maritime transmitters to complex satellite transmitting and receiving equipment. Inspectors are primarily responsive for ensuring that the radio transmitting and receiving equipment provides safety communications capability at the time of inspection. It is the ship operator's responsibility to ensure that the vessel is capable of providing safety communications at all other times. The Commission recognizes the importance of ensuring safety of life and property at sea. In 1990, we incorporated the GMDSS amendments to the Safety Convention in Part 80 of our Rules, 47 CFR Part 80, to implement and internationally approved safety system. We have worked in conjunction with the United States Coast Guard on a recommendation to Congress that the United States amend the Communications Act to incorporate the GMDSS to replace the outdated manual Morse Call radiotelegraph requirements.

4. We are conducting an inquiry into whether the policies and procedures that the Commission uses to inspect and verify that a radio installation on a U.S. vessel is properly installed and functions as intended during a distress can be simplified and streamlined. For example, an inspection of a large cargo vessel can take up to 6 hours, not including travel time, and is often highly complex. Commission inspectors note anecdotally, however, that the ship's captain often reports that the only time that one component, the medium frequency radiotelegraph installation, is used is during the annual FCC inspection.

5. Although the inspections the Commission currently conducts for large cargo vessels are complex, the inspections required in the GMDSS may not be quite as complicated because much of the equipment will incorporate self-test features. Further, many of the inspections the Commission conducts for small passenger vessels are relatively simple and generally take no more than an hour to complete. All of the

inspections are conducted to ensure that ships have a reliable means of distress communications in an emergency.

6. We believe in the principle that government should be responsive to user needs and began this proceeding to promote flexibility, to improve our inspection process by removing unnecessary and inimical policies and, most importantly, provide better service to the public. In summary, we believe that it is both necessary and timely to commence a thorough review of the policies, rules and procedures that the Commission uses to regulate the inspection of compulsorily equipped ships. The primary purpose of this Notice is to compile a complete record that will (1) allow us to improve current inspections processes, (2) develop a technically sufficient regulatory environment for the inspection of ships subject to the GMDSS, and (3) provide an overall strategy on how to best utilize private sector entities to inspect compulsory ship stations.

7. Initial Regulatory Flexibility Analysis

An Initial Regulatory Flexibility Analysis is not required.

List of Subjects in 47 CFR Part 80

Communications equipment, Radio, Reporting and recordkeepinkg requirements.

Federal Communications Commission.

William F. Caton,

Secretary.

[FR Doc. 95–13490 Filed 6–1–95; 8:45 am]

BILLING CODE 6712–01–M

DEPARTMENT OF COMMERCE

National Oceanic and Atmospheric Administration

50 CFR Part 285

[I.D. 052495B]

Atlantic Tuna Fisheries; Comment Period Extension

AGENCY: National Marine Fisheries Service (NMFS), National Oceanic and Atmospheric Administration (NOAA), Commerce.

ACTION: Proposed rule; extension of comment period.

SUMMARY: On May 12, 1995, NMFS published a proposed rule to amend the Atlantic tuna fisheries that would address allocation issues in the Atlantic bluefin categories, simplify rules applicable to recreational tuna fishing, enhance data collection, improve enforcement efforts, and resolve/clarify other issues.

NMFS announces that it is extending the comment period for the 1995 proposed rule on Atlantic tuna fisheries from June 8 to June 16, 1995.

DATES: Written comments must be received on or before June 16, 1995.

ADDRESSES: Written comments on the rulemaking for Atlantic bluefin, yellowfin and other tunas, should be sent to:

Richard B. Stone, Chief, Highly Migratory Species Management Division (F/CM4), Office of Fisheries Conservation and Management, National Marine Fisheries Service, 1315 East-West Highway, Room 14853, Silver Spring, MD 20910.

FOR FURTHER INFORMATION CONTACT: Chris Rogers, 301-713-2347.

SUPPLEMENTARY INFORMATION: As a result of the initial hearings held in May 1995, and requests from the public, NMFS has determined that it is important for commenters to have additional time to submit their comments on this proposed rulemaking.

Therefore, NMFS is extending the comment period on the 1995 Atlantic tuna rulemaking from June 8, 1995, to June 16, 1995.

Dated: May 24, 1995.

Richard H. Schaefer,

Director, Office of Fisheries Conservation and Management, National Marine Fisheries Service.

[FR Doc. 95–13446 Filed 6–1–95; 8:45 am]

BILLING CODE 3510–22–F

Notices

Federal Register
Vol. 60, No. 106
Friday, June 2, 1995

This section of the FEDERAL REGISTER contains documents other than rules or proposed rules that are applicable to the public. Notices of hearings and investigations, committee meetings, agency decisions and rulings, delegations of authority, filing of petitions and applications and agency statements of organization and functions are examples of documents appearing in this section.

DEPARTMENT OF AGRICULTURE

Forms Under Review by Office of Management and Budget

May 26, 1995.

The Department of Agriculture has submitted to OMB for review the following proposal for the collection of information under the provisions of the Paperwork Reduction act (44 U.S.C. Chapter 35) since the last list was published. This list is grouped into new proposals, revisions, extension, or reinstatements. Each entry contains the following information:

(1) Agency proposing the information collection; (2) Title of the information collection; (3) Form number(s), if applicable; (4) Who will be required or asked to report; (5) An estimate of the number of responses; (6) An estimate of the total number of hours needed to provide the information; (7) Name and telephone number of the agency contact person.

Questions about the items in the listing should be directed to the agency person named at the end of each entry. Copies of the proposed forms and supporting documents may be obtained from: Department Clearance Officer, USDA, OIRM, Room 404–W Admin. Bldg., Washington, DC 20250, (202) 690–2118.

Revision

- Consolidated Farm Service Agency

7 CFR 1413, 1414, 1415, 1416—Forms for Participation in Price Support and Production Adjustment Programs
CCC–477, 477 Appendix, CCC–477B, CCC–477A, ASCS–503, ASCS 658–1, CCC–505, CCC–507A, CCC–406, 406 Appendix, CCC–300, 300 Appendix, CCC–302, CCC–135, 135 Appendix, CCC–136
Farms; 1,740,000 responses; 433,400 hours
Bruce Hiatt (202) 690–2798

- Food and Consumer Services

FSP Store Applications
Form FNS–252; 252A; 252R and 252–2
Business or other for-profit; Not-for-profit institutions; 112,023 responses; 32,482 hours
Preston Mears (703) 305–2419

- Food and Consumer Services

Requisition for Food Stamp Coupon Books
Form FNS–260
State, Local or Tribal Government; 6,900 responses; 3,450 hours
Asher Bryte (703) 305–2418

Donald E. Hulcher,
Deputy Departmental Clearance Officer.

[FR Doc. 95–13479 Filed 6–1–95; 8:45 am]

BILLING CODE 3410–01–M

DEPARTMENT OF COMMERCE

National Oceanic and Atmospheric Administration

[I.D. 052595A]

Endangered Species; Permits

AGENCY: National Marine Fisheries Service (NMFS), National Oceanic and Atmospheric Administration (NOAA), Commerce.

ACTION: Notice of receipt of application for a scientific research permit (P521A).

SUMMARY: Notice is hereby given that Dr. James Spotila and Dr. Pamela Plotkin of Drexel University have applied in due form for a permit to take listed sea turtles for the purpose of scientific research.

DATES: Written comments or requests for a public hearing on this application must be received on or before July 3, 1995.

ADDRESSES: The application and related documents are available for review by appointment in the following offices:

Office of Protected Resources, F/PR8, NMFS, 1315 East-West Hwy., Room 13307, Silver Spring, MD 20910–3226 (301–713–1401); Director, Northeast Region, NMFS, NOAA, One Blackburn Drive, Gloucester, MA 01930–2298 (508–281–9250).

Written comments, or requests for a public hearing on this application should be submitted to the Chief, Endangered Species Division, Office of Protected Resources.

SUPPLEMENTARY INFORMATION: The application requests a permit under the authority of the Endangered Species Act of 1973 (ESA) (16 U.S.C. 1531–1543) and NMFS regulations governing listed fish and wildlife permits (50 CFR parts 217–227). The applicant requests authorization to take 100 listed loggerhead, green, and Kemp's ridley sea turtles (*Caretta caretta*, *Chelonia mydas*, and *Lepidochelys kempii*) in 1995. The animals will be measured, examined, photographed, tagged, have blood and fecal samples taken, and be released at the site of capture. The purpose of the research is to assess the distribution and population dynamics of sea turtles in Delaware Bay.

Those individuals requesting a hearing (see **ADDRESSES**) should set out the specific reasons why a hearing on this particular application would be appropriate. The holding of such hearing is at the discretion of the Assistant Administrator for Fisheries, NOAA. All statements and opinions contained in this application summary are those of the Applicant and do not necessarily reflect the views of NMFS.

Dated: May 25, 1995.

Russell J. Bellmer,
Chief, Endangered Species Division, Office of Protected Resources, National Marine Fisheries Service.

[FR Doc. 95–13445 Filed 6–1–95; 8:45 am]

BILLING CODE 3510–22–F

[I.D. 052695A]

Marine Mammals

AGENCY: National Marine Fisheries Service (NMFS), National Oceanic and Atmospheric Administration (NOAA), Commerce.

ACTION: Issuance of modification to permit no. 945 (P319D).

SUMMARY: Notice is hereby given that on May 25, 1995, permit no. 945, isssued to Randall S. Wells, Ph.D., Dolphin Biology Research Institute, c/o Mote Marine Laboratory, 1600 Thompson Parkway, Sarasota, FL 34236 was modified.

ADDRESSES: The modification and related documents are available for review upon written request or by appointment in the following offices:

Permits Division, Office of Protected Resources, NMFS, 1315 East-West Highway, Room 13130 Silver Spring, MD 20910 (301/713–2289);

Director, Southeast Region, NMFS, NOAA, 9721 Executive Center Drive,

North St. Petersburg, FL 33702 (813/570–5312).

SUPPLEMENTARY INFORMATION: The subject modification has been issued under the authority of the Marine Mammal Protection Act of 1972, as amended (16 U.S.C. 1361 *et seq.*) and the provisions of § 216.33(d) and (e) of the Regulations Governing the Taking and Importing of Marine Mammals (50 CFR part 216).

The original permit authorized the the Holder to capture, sample and/or conduct procedures for the assessment of various health parameters and subsequently release up to 150 individual dolphins near the Sarasota, Florida, area over a 5-year period. Special condition A.4 of the original permit has been altered to reflect the circumstances needed to conduct the specified research activities.

Dated: May 25, 1995.

Ann D. Terbush,

Chief, Permits & Documentation Division, Office of Protected Resources, National Marine Fisheries Service.

[FR Doc. 95–13513 Filed 6–1–95; 8:45 am]

BILLING CODE 3510–22–F

Patent and Trademark Office

[Docket No. 9505 31 44–5144–01]

Request for Comments on Proposed Examination Guidelines for Computer-Implemented Inventions

AGENCY: Patent and Trademark Office, Commerce.

ACTION: Notice and request for public comments.

SUMMARY: The Patent and Trademark Office (PTO) requests comments from any interested member of the public on proposed internal guidelines to be used by Office personnel in their review of patent applications on computer-implemented inventions. Because these guidelines govern internal practices, they are exempt from notice and comment rulemaking under 5 U.S.C. 553(b)(A).

DATES: Written comments on the proposed guidelines will be accepted by the PTO until July 31, 1995.

ADDRESSES: Written comments should be addressed to the Commissioner of Patents and Trademarks, marked to the attention of Jeff Kushan. Comments submitted by mail should be sent to Commissioner of Patents and Trademarks, Box 4, Patent and Trademark Office, Washington, DC 20231. Comments may also be submitted by telefax at (703) 305–8885 and by electronic mail through the Internet to ''comments-software@uspto.gov.'' Written comments should include the following information:

—name and affiliation of the individual responding;

—an indication of whether comments offered represent views of the respondent's organization or are the respondent's personal views; and

—if applicable, information on the respondent's organization, including the type of organization (e.g., business, trade group, university, non-profit organization) and general areas of interest.

Parties presenting written comments who wish to have their comments included in a publicly accessible electronic database of comments must provide their comments in machine-readable format. Such submissions may be provided in the form of an electronic mail message sent through the Internet, or on a 3.5″ floppy disk formatted for use in either a Macintosh or MS–DOS based computer. Machine-readable submissions must be provided as unformatted text (e.g., ASCII or plain text).

All written comments, whether submitted on paper or in machine-readable form, will be available for public inspection no later than August 18, 1995, in Room 902 of Crystal Park Two, 2121 Crystal Drive, Arlington, Virginia. In addition, comments provided in machine-readable format will be available no later than August 18, 1995, through anonymous file transfer protocol (ftp) via the Internet (address: comments.uspto.gov) and through the World Wide Web (address: www.uspto.gov).

FOR FURTHER INFORMATION CONTACT: Jeff Kushan by telephone at (703) 305–9300, by fax at (703) 305–8885, by electronic mail at kushan@uspto.gov, or by mail marked to his attention addressed to the Commissioner of Patents and Trademarks, Box 4, Washington, DC 20231.

SUPPLEMENTARY INFORMATION

I. Guidelines for Examination of Computer-Implemented Inventions

A. General Considerations

The following guidelines have been developed to assist Office personnel in their review of applications drawn to computer-implemented inventions. These guidelines respond to recent changes in the law that governs the patentability of computer-implemented inventions, and set forth the official policy of the Office regarding inventions in this field of technology.

It is essential that patent applicants obtain a prompt yet complete examination of their applications. The Office can best achieve this goal by raising any issue that may affect patentability in the initial action on the merits. Under the principles of compact prosecution, each claim should be reviewed for compliance with every statutory requirement of patentability in the initial review of the application, even if one or more claims is found to be deficient with respect to one statutory requirement. Deficiencies should be explained clearly, particularly when they serve as a basis of a rejection. Where possible, examiners should indicate how rejections may be overcome and problems resolved. A failure to follow this approach can lead to unnecessary delays in the prosecution of the application.

B. Procedures To Be Followed When Evaluating Computer-Implemented Inventions

The following procedures should be used when reviewing applications drawn to computer-implemented inventions.

1. *Determine what the applicant has invented by reviewing the written description and the claims.*

(a) Identify any specific embodiments of the invention that have been disclosed, review the detailed descripton of the invention and note the specific utility that has been asserted for the invention.

(b) Analyze each claim carefully, correlating each claim element to the relevant portion of the written description that describes that element. Give claim elements their broadest reasonable interpretation that is consistent with the written description. If elements of a claimed invention are defined in means plus function format, review the written description to identify the specific structure, materials or acts that correspond to each such element.

(c) Considering each claim as a whole, classify the invention defined by each claim as to its statutory category (i.e., process, machine, manufacture or composition of matter). Rely on the following presumptions in making this classification.

(i) A computer or other programmable apparatus whose actions are directed by a computer program or other form of ''software'' is a statutory ''machine.''

(ii) A computer-readable memory that can be used to direct a computer to function in a particular manner when used by the computer [1] is a statutory ''article of manufacture''.

(iii) A series of specific operational steps to be performed on or with the aid of a computer is a statutory ''process''.

A claim that clearly defines a computer-implemented process but is not cast as an element of a computer-readable memory or as implemented on a computer should be classified as a statutory ''process.'' [2] If an applicant responds to an action of the Office based on this classification by asserting that subject matter claimed in this format is a machine or an article of manufacture, reject the claim under 35 U.S.C. 112, second paragraph, for failing to recite at least one physical element in the claims that would otherwise place the invention in either of these two ''product'' categories. The Examiner should also object to the specification under 37 CFR 1.71(b) if such an assertion is made, as the complete invention contemplated by the applicant has not been cast precisely as being an invention within one of the statutory categories.

A claim that defines an invention as any of the following subject matter should be classified as non-statutory.

—a compilation or arrangement of data, independent of any physical element;
—a known machine-readable storage medium that is encoded with data representing creative or artistic expression (e.g., a work of music, art or literature) [3], [4];
—a ''data structure'' independent of any physical element (i.e., not as implemented on a physical component of a computer such as a computer-readable memory to render that component capable of causing a computer to operate in a particular manner); or
—a process that does nothing more than manipulate abstract ideas or concepts (e.g., a process consisting solely of the steps one would follow in solving a mathematical problem [5]).

Claims in this form are indistinguishable from abstract ideas, laws of nature and natural phenomena and may not be patented. Non-statutory claims should be handled in the manner described in section (2)(c) below.

2. *Analyze each claim to determine if it complies with § 112, second paragraph, and with § 112, first paragraph.*

(a) Determine if the claims particularly point out and distinctly claim the invention. To do this, compare the invention as claimed to the invention as it has been described in the specification. Pay particular attention to the specific utility contemplated for the invention—features or elements of the invention that are necessary to provide the specific utility contemplated for that invention must be reflected in the claims. If the claims fail to accurately define the invention, they should be rejected under § 112, second paragraph. A failure to limit the claim to reflect features of the invention that are necessary to impart the specific utility contemplated may also create a deficiency under § 112, first paragraph.

If elements of a claimed invention are defined using ''means plus function'' language, but it is unclear what structure, materials or acts are intended to correspond to those elements, reject the claim under § 112, second paragraph. A rejection imposed on this basis shifts the burden to the applicant to describe the specific structure, material or acts that correspond to the means element in question, and to identify the precise location in the specification where a description of that means element can be found. Interpretation of means elements for § 112, second paragraph purposes must be consistent with interpretation of such elements for §§ 102 and 103 purposes.

Computer program-related elements of a computer-implemented [6] invention may serve as the specific structure, material or acts that correspond to an element of an invention defined using a means plus function limitation. For example, a series of operations performed by a computer under the direction of a computer program may serve as ''specific acts'' that correspond to a means element. Similarly, a computer-readable memory encoded with data representing a computer program that can cause a computer to function in a particular fashion, or a component of a computer that has been reconfigured with a computer program to operate in a particular fashion, can serve as the ''specific structure'' corresponding to a means element.

Claims must be defined using the English language. See, 37 CFR 1.52(a). A computer programming language is not the English language, despite the fact that English words may be used in that language. Thus, an applicant may not use computer program code, in either source or object format, to define the metes and bounds of a claim. A claim which attempts to define elements of an invention using computer program code, rather than the functional steps which are to be performed, should be rejected under § 112, second paragraph, and should be objected to under 37 CFR 1.52(a).

(b) Construe the scope of the claimed invention to determine if it is adequately supported by an enabling disclosure. Construe any element defined in means plus function language to encompass all reasonable equivalents of the specific structure, material or acts disclosed in the specification corresponding to that means element. Special care should be taken to ensure that each claim complies with the written description and enablement requirements of 35 U.S.C. § 112.

(c) A claim *as a whole* that defines non-statutory subject matter is deficient under § 101, and under § 112, second paragraph. Determining the scope of a claim as a whole requires a clear understanding of what the applicant regards as the invention. The review performed in step 1 should be used to gain this understanding.

(i) If the invention as disclosed in the written description is statutory, but the claims define subject matter that is not, the deficiency can be corrected by an appropriate claim amendment. Therefore, reject the claims under §§ 101 and 112, second paragraph, but identify the features of the invention that, if recited in the claim, would render the claimed subject matter statutory.

(ii) If the invention, both as disclosed and as claimed, is not statutory subject matter, reject the claims under § 101 for being drawn to non-statutory subject matter, and under § 112, second paragraph, for failing to particularly point out and distinctly claim an invention entitled to protection under U.S. patent law.

An invention is not statutory if it falls within any of the non-statutory claim categories outlined in section (1)(c) above. Also, in rare situations, a claim classified as a statutory machine or article of manufacture may define non-statutory subject matter. Non-statutory subject matter (i.e., abstract ideas, laws of nature and natural phenomena) does not become statutory merely through a different form of claim presentation. Such a claim will (a) define the ''invention'' not through characteristics of the machine or article of manufacture claimed but exclusively in terms of a non-statutory process that is to be performed on or using that machine or article of manufacture, and (b) encompass any product in the stated class (e.g., computer, computer-readable memory) configured *in any manner* to perform that process.

3. *Determine if the claimed invention is novel and nonobvious under §§ 102 and 103.* When evaluating claims defined using ''means plus function'' language, refer to the specific guidance provided in the *In re Donaldson* guidelines [1162 OG 59] and section (3)(a) above.

C. Notes on the Guidelines

[1] Articles of manufacture encompassed by this definition consist of two elements: (1) a computer-readable storage medium, such as a memory device, a compact disc or a floppy disk, and (2) the specific physical configuration of the substrate of the computer-readable storage medium that represents data (e.g., a computer program), where the storage medium so configured causes a computer to operate in a specific and predefined manner. The composite of the two elements is a storage medium with a particular physical structure and function (e.g., one that will impart the functionality represented by the data onto a computer).

[2] For example, a claim that is cast as ''a computer program'' but which then recites specific steps to be implemented on or using a computer should be classified as a ''process.'' A claim to simply a ''computer program'' that does not define the invention in terms of specific steps to be performed on or using a computer should not be classified as a statutory process.

[3] The specific words or symbols that constitute a computer program represent the expression of the computer program and as such are a literary creation.

[4] A claim in this format should also be rejected under § 103, as being obvious over the known machine-readable storage medium standing alone.

[5] A claim to a method consisting solely of the steps necessary to converting one set of numbers to another set of numbers without reciting any computer-implemented steps would be a non-statutory claim under this definition.

[6] This includes the software and any associated computer hardware that is necessary to perform the functions directed by the software.

II. Additional Information

An analysis of the law supporting the examination guidelines for computer-implemented inventions is being prepared. Interested members of the public are invited to comment on this legal analysis. Copies of the legal analysis can be obtained from Jeff Kushan on or after June 23, 1995, who can be reached using the information indicated above.

Dated: May 30, 1995.

Bruce A. Lehman,

Assistant Secretary of Commerce and Commissioner of Patents and Trademarks.

[FR Doc. 95–13694 Filed 5–31–95; 2:13 pm]

BILLING CODE 3510–16–M

COMMITTEE FOR PURCHASE FROM PEOPLE WHO ARE BLIND OR SEVERELY DISABLED

Procurement List Additions and Deletions

AGENCY: Committee for Purchase From People Who Are Blind or Severely Disabled.

ACTION: Additions to and deletions from the Procurement List.

SUMMARY: This action adds to the Procurement List commodities and services to be furnished by nonprofit agencies employing persons who are blind or have other severe disabilities, and deletes from the Procurement List commodities previously furnished by such agencies.

EFFECTIVE DATE: July 3, 1995.

ADDRESSES: Committee for Purchase From People Who Are Blind or Severely Disabled, Crystal Square 3, Suite 403, 1735 Jefferson Davis Highway, Arlington, Virginia 22202–3461.

FOR FURTHER INFORMATION CONTACT: Beverly Milkman (703) 603–7740.

SUPPLEMENTARY INFORMATION: On May 13, 1994, February 10, 17, March 17 and April 14, 1995, the Committee for Purchase From People Who Are Blind or Severely Disabled published notices (59 FR 25038, 60 F.R. 7944, 9326, 14427 and 19026) of proposed additions to and deletions from the Procurement List.

Additions

After consideration of the material presented to it concerning capability of qualified nonprofit agencies to provide the commodities and services, fair market price, and impact of the additions on the current or most recent contractors, the Committee has determined that the commodities and services listed below are suitable for procurement by the Federal Government under 41 U.S.C. 46–48c and 41 CFR 51–2.4.

I certify that the following action will not have a significant impact on a substantial number of small entities. The major factors considered for this certification were:

1. The action will not result in any additional reporting, recordkeeping or other compliance requirements for small entities other than the small organizations that will furnish the commodities and services to the Government.

2. The action does not appear to have a severe economic impact on current contractors for the commodities and services.

3. The action will result in authorizing small entities to furnish the commodities and services to the Government.

4. There are no known regulatory alternatives which would accomplish the objectives of the Javits-Wagner-O'Day Act (41 U.S.C. 46–48c) in connection with the commodities and services proposed for addition to the Procurement List. Accordingly, the following commodities and services are hereby added to the Procurement List:

Commodities

Side Rack, Vehicle
2510–00–179–7093
Disk, Flexible
7045–01–365–2069
7045–01–365–2070
7045–01–365–2071
Suit, Contamination Avoidance
8415–01–364–3320
8415–01–364–3321
8415–01–364–3322

Services

Grounds Maintenance, U.S. Army Reserve Center, 1816 East Main Street, Albemarle, North Carolina
Grounds Maintenance, Naval and Marine Corps Reserve Center, 3190 Gilbert Avenue, Cincinnati, Ohio
Grounds Maintenance, U.S. Army Reserve Center, 1984 Whiskey Road, Aiken, South Carolina
Janitorial/Related Exterior Maintenance, VA Outpatient Clinic, 351 East Temple Street, Los Angeles, California
Recycling Service, Robins Air Force Base, Georgia

This action does not affect current contracts awarded prior to the effective date of this addition or options exercised under those contracts.

Deletions

After consideration of the relevant matter presented, the Committee has determined that the commodities listed below are no longer suitable for procurement by the Federal Government under 41 U.S.C. 46–48c and 41 CFR 51–2.4.

Accordingly, the following commodities are hereby deleted from the Procurement List:

Gown, Operating, Surgical
6532–01–058–2518 thru -2525

Beverly L. Milkman,

Executive Director.

[FR Doc. 95–13558 Filed 6–1–95; 8:45 am]

BILLING CODE 6820–33–P

Procurement List Proposed Additions and Deletions

AGENCY: Committee for Purchase From People Who Are Blind or Severely Disabled.

ACTION: Proposed additions to and deletions from Procurement List.

SUMMARY: The Committee has received proposals to add to the Procurement List commodities and services to be furnished by nonprofit agencies employing persons who are blind or have other severe disabilities, and to delete commodities previously furnished by such agencies.

COMMENTS MUST BE RECEIVED ON OR BEFORE: July 3, 1995.

ADDRESSES: Committee for Purchase From People Who Are Blind or Severely Disabled, Crystal Square 3, Suite 403, 1735 Jefferson Davis Highway, Arlington, Virginia 22202–3461.

FOR FURTHER INFORMATION CONTACT: Beverly Milkman (703) 603–7740.

SUPPLEMENTARY INFORMATION: This notice is published pursuant to 41 U.S.C. 47(a) (2) and 41 CFR 51–2.3. Its purpose is to provide interested persons an opportunity to submit comments on the possible impact of the proposed actions.

Additions

If the Committee approves the proposed additions, all entities of the Federal Government (except as otherwise indicated) will be required to procure the commodities and services listed below from nonprofit agencies employing persons who are blind or have other severe disabilities.

I certify that the following action will not have a significant impact on a substantial number of small entities. The major factors considered for this certification were:

1. The action will not result in any additional reporting, recordkeeping or other compliance requirements for small entities other than the small organizations that will furnish the commodities and services to the Government.

2. The action does not appear to have a severe economic impact on current contractors for the commodities and services.

3. The action will result in authorizing small entities to furnish the commodities and services to the Government.

4. There are no known regulatory alternatives which would accomplish the objectives of the Javits-Wagner-O'Day Act (41 U.S.C. 46–48c) in connection with the commodities and services proposed for addition to the Procurement List.

Comments on this certification are invited. Commenters should identify the statement(s) underlying the certification on which they are providing additional information.

The following commodities and services have been proposed for addition to Procurement List for production by the nonprofit agencies listed:

Commodities

Light, Marker, Distress
6230–01–143–4778
NPA: Fedcap Rehabilitation Services, Inc. New York, New York

Cover, Headrest, Plastic
7290–00–890–1822
NPA: Wichita Industries and Services for the Blind, Inc., Wichita, Kansas

Folder, Medical, Outpatient
7530–00–NIB–0193
(Requirements for the VA Medical Center, Richmond, Virginia)
NPA: Lions Club Industries for the Blind, Inc., Durham, North Carolina

Case, Flag, Hardwood
8345–00–NSH–0013 (Navy - 18″ x 25″)
8345–00–NSH–0014 (Marine Corps - 18″ x 25″)
(Requirements for the Naval Medical Logistics Command, Fort Detrick, Maryland)
NPA: Triangle, Inc., Malden, Massachusetts

Services

Administrative Services for the following Washington, DC locations:
Department of the Treasury, Technical Assistance Office, 1730 K Street, NW
Department of the Treasury, 1500 Pennsylvania Avenue, NW, Saudi-Arabian Joint Commission Office, 1401 New York Avenue, NW
NPA: Fairfax Opportunities Unlimited, Inc., Springfield, Virginia

Grounds Maintenance, Fleet and Industrial Supply Center, Administrative Areas, Oahu, Hawaii
NPA: Lanikila Rehabilitation Center, Honolulu, Hawaii

Janitorial/Custodial, U.S. Army Reserve Center, Montgomery County Airport, 100 South Parkway, Conroe, Texas
NPA: Tri-County Mental Health Mental Retardation Services, Conroe, Texas

Medical Transcription, Department of Veterans Affairs Medical Center, 7305 N. Military Trail, West Palm Beach, Florida
NPA: Gulfstream Goodwill Industries, Inc., West Palm Beach, Florida

Deletions

I certify that the following action will not have a significant impact on a substantial number of small entities. The major factors considered for this certification were:

1. The action will not result in any additional reporting, recordkeeping or other compliance requirements for small entities.

2. The action does not appear to have a severe economic impact on future contractors for the commodities.

3. The action will result in authorizing small entities to furnish the commodities to the Government.

4. There are no known regulatory alternatives which would accomplish the objectives of the Javits-Wagner-O'Day Act (41 U.S.C. 46–48c) in connection with the commodities proposed for deletion from the Procurement List.

The following commodities have been proposed for deletion from the Procurement List:

Cap, Garrison
8410–01–381–5481
8410–01–381–5507
8410–01–381–5521
8410–01–381–5536
8410–01–381–5544
8410–01–381–5559
8410–01–381–5566
8410–01–381–5612
8410–01–381–5627
8410–01–381–5647

Beverly L. Milkman,

Executive Director.

[FR Doc. 95–13559 Filed 6–1–95; 8:45 am]

BILLING CODE 6820–33–P

Procurement List Addition

AGENCY: Committee for Purchase From People Who Are Blind or Severely Disabled.

ACTION: Addition to the Procurement List.

SUMMARY: This action adds to the Procurement List a service to be furnished by nonprofit agencies employing persons who are blind or have other severe disabilities.

EFFECTIVE DATE: July 3, 1995.

ADDRESS: Committee for Purchase From People Who Are Blind or Severely Disabled, Crystal Square 3, Suite 403, 1735 Jefferson Davis Highway, Arlington, Virginia 22202-3461.

FOR FURTHER INFORMATION CONTACT: Beverly Milkman (703) 603–7740.

SUPPLEMENTARY INFORMATION: On January 13, 1995, the Committee for Purchase From People Who Are Blind or Severely Disabled published notice (60 F.R. 3196) of proposed addition to the Procurement List.

After consideration of the material presented to it concerning capability of qualified nonprofit agencies to provide the service, fair market price, and impact of the addition on the current or most recent contractors, the Committee has determined that the service listed below are suitable for procurement by the Federal Government under 41 U.S.C. 46–48c and 41 CFR 51–2.4.

I certify that the following action will not have a significant impact on a substantial number of small entities. The major factors considered for this certification were:

1. The action will not result in any additional reporting, recordkeeping or

other compliance requirements for small entities other than the small organizations that will furnish the service to the Government.

2. The action does not appear to have a severe economic impact on current contractors for the service.

3. The action will result in authorizing small entities to furnish the service to the Government.

4. There are no known regulatory alternatives which would accomplish the objectives of the Javits-Wagner-O'Day Act (41 U.S.C. 46-48c) in connection with the service proposed for addition to the Procurement List.

Accordingly, the following service is hereby added to the Procurement List:

Food Service, Patrick Air Force Base, Florida.

This action does not affect current contracts awarded prior to the effective date of this addition or options exercised under those contracts.

Beverly L. Milkman,

Executive Director.

[FR Doc. 95–13683 Filed 6–1–95; 8:45 am]

BILLING CODE 6820-33-p

CORPORATION FOR NATIONAL AND COMMUNITY SERVICE

Final Notice of Selection of AmeriCorps*VISTA Sponsors and Projects Guidelines

SUMMARY: The Corporation for National and Community Service is issuing this final notice addressing the criteria for sponsorship of new and existing AmeriCorps*VISTA projects, criteria for project selection, and the approval process at the State level. Also, the process for selecting national competitive and national demonstration AmeriCorps*VISTA projects is addressed.

DATES: The effective date of these guidelines was February 7, 1995.

FOR FURTHER INFORMATION CONTACT: Diana B. London, Deputy Director, AmeriCorps*VISTA, (202) 606–5000, extension 228. For individuals with disabilities, information will be made available in alternative formats, upon request.

SUPPLEMENTARY INFORMATION: The Corporation for National and Community Service published the Selection of AmerCorps*VISTA Sponsors and Projects Guidelines in the **Federal Register,** Volume 60, No. 25, on February 7, 1995. The Corporation received no comments on the issues discussed in these guidelines.

Dated: May 26, 1995.

Tracy Gray,

Acting Executive Vice-President Corporation for National and Community Service.

[FR Doc. 95–13447 Filed 6–1–95; 8:45 am]

BILLING CODE 6050–28–M

DEPARTMENT OF ENERGY

Federal Energy Regulatory Commission

[Docket No. ER90–168–020, et al.]

National Electric Associates Limited Partnership, et al., Electric Rate and Corporate Regulation Filings

May 25, 1995.

Take notice that the following filings have been made with the Commission:

1. National Electric Associates Limited Partnership

[Docket No. ER90–168–020]

Take notice that on April 28, 1995, National Electric Associates Limited Partnership tendered for filing certain information pursuant to the Commission's order dated March 20, 1990. Copies of the informational filing are on file with the Commission and are available for public inspection.

2. The Cleveland Electric Illuminating Company, and The Toledo Edison Company

[Docket No. EC94–14–000]

Take notice that on May 9, 1995, The Cleveland Electric Illuminating Company (Cleveland Electric) and The Toledo Edison Company (Toledo Edison) (together, the Applicants) tendered for filing an amendment to the application for an order from the Commission authorizing the merger of Toledo Edison into Cleveland Electric.

The Applicants are public utilities organized and existing under the lease of the State of Ohio, and both Applicants are engaged in the business of supplying electric energy to wholesale and retail customers within the State of Ohio. Cleveland Electric generates, transmits, distributes and sells electric energy to approximately 748,000 customers in Northeastern Ohio. Toledo Edison generates, transmits, distributes and sells electric energy to approximately 285,000 customers in Northwestern Ohio. Cleveland Electric's and Toledo Edison's operations are subject to regulation by The Public Utilities Commission of Ohio. Centerior Energy Corporation (Centerior), which is organized and existing under the laws of the State of Ohio, is the 100% owner of the common stock of both Cleveland Electric and Toledo Edison. Each of Cleveland Electric and Toledo Edison has outstanding serial preferred shares that are held by the public.

Under the terms and conditions of a definitive Agreement of Merger entered into by Cleveland Electric and Toledo Edison, 100% of the common shares of Toledo Edison will be converted into newly-issued common shares of Cleveland Electric, the Toledo Edison preferred shares will be exchanged for newly-issued preferred shares of Cleveland Electric, and any dissenting preferred shareholders of Toledo Edison will be paid cash for their shares upon exercise of applicable dissenters' rights. Upon the occurrence of these events, Toledo Edison will be merged into Cleveland Electric, and the separate corporate existence of Toledo Edison will cease. Cleveland Electric will, by operation of law, acquire title to and interest in all facilities of Toledo Edison in that are currently under the jurisdiction of the Commission, and Cleveland Electric will operate such facilities without change.

Cleveland Electric and Toledo believe that the proposed corporate reorganization is consistent with the public interest, and that it will be in the best interests of the customers, shareowners and employees of both Applicants.

Comment date: June 9, 1995, in accordance with Standard Paragraph E at the end of this notice.

3. Catex Vitol Electric, L.L.C.

[Docket No. ER94–155–007]

Take notice that on May 1, 1995, Catex Vitol Electric, L.L.C. tendered for filing certain information pursuant to the Commission's order dated January 14, 1995. Copies of the informational filing are on file with the Commission and are available for public inspection.

4. The Electric Exchange

[Docket No. ER95–111–002]

On May 18, 1995, The Electric Exchange (''Applicant'') tendered for filing information concerning the identity of its limited partners and a revised rate schedule as required by the May 3, 1995 letter order in these proceedings. Applicant has requested that the Commission act expeditiously on the filing.

Comment date: June 8, 1995, in accordance with Standard Paragraph E at the end of this notice.

5. Jersey Central Power & Light Company

[Docket No. ER95–557–000]

Take notice that on March 17, 1995, Jersey Central Power & Light Company tendered for executed copies of the signature page for the amendment to the Purchase and Sale Agreement between GPU and Niagara Mohawk Power Corporation.

Comment date: June 8, 1995, in accordance with Standard Paragraph E at the end of this notice.

6. Maine Public Service Company

[Docket No. ER95–954–000]

Take notice that on May 10, 1995, Maine Public Service Company tendered for filing a supplement to its April 26, 1995, filing in Docket No. ER95–954–000.

Comment date: June 9, 1995, in accordance with Standard Paragraph E at the end of this notice.

7. Southern Company Services Company

[Docket No. ER95–971–000]

Take notice that on April 28, 1995, Southern Company Services, Inc., acting on behalf of Alabama Power Company, Georgia Power Company, Gulf Power Company, Mississippi Power Company, and Savannah Electric and Power Company (collectively referred to as ''Southern Companies'') filed a Notice of Cancellation of Short-Term Non-Firm Transmission Service Tariff of Southern Companies (FERC Electric Tariff Original Volume No. 1).

Comment date: June 8, 1995, in accordance with Standard Paragraph E at the end of this notice.

8. Madison Gas and Electric Company

[Docket No. ER95–1017–000]

Take notice that on May 5, 1995, Madison Gas and Electric Company (MGE) tendered for filing a service agreement with Central Illinois Public Service Company under MGE's Power Sales Tariff. MGE requests an effective date 60 days from the filing date.

Comment date: June 9, 1995, in accordance with Standard Paragraph E at the end of this notice.

9. Kohler Company

[Docket No. ER95–1018–000]

Take notice that on May 8, 1995, Kohler Company tendered for filing an Application for Waivers, Blanket Authorizations, and Order Accepting Rate Schedule.

Comment date: June 9, 1995, in accordance with Standard Paragraph E at the end of this notice.

10. Gulf Power Company

[Docket No. ER95–1025–000]

Take notice that on May 8, 1995, Gulf Power Company tendered for filing Supplements to Service Schedule T of the Gulf/AEC Interconnection Agreement (FERC Rate Schedule No. 82).

Comment date: June 9, 1995, in accordance with Standard Paragraph E at the end of this notice.

Standard Paragraphs

E. Any person desiring to be heard or to protest said filing should file a motion to intervene or protest with the Federal Energy Regulatory Commission, 825 North Capitol Street, NE., Washington, DC 20426, in accordance with Rules 211 and 214 of the Commission's Rules of Practice and Procedure (18 CFR 385.211 and 18 CFR 385.214). All such motions or protests should be filed on or before the comment date. Protests will be considered by the Commission in determining the appropriate action to be taken, but will not serve to make protestants parties to the proceeding. Any person wishing to become a party must file a motion to intervene. Copies of this filing are on file with the Commission and are available for public inspection.

Linwood A. Watson, Jr.,

Acting Secretary.

[FR Doc. 95–13472 Filed 6–1–95; 8:45 am]

BILLING CODE 6717–01–P

Power Flow Simulation Package Presentation

May 26, 1995.

On May 31, 1995, Thomas Overbye and George Gross, both of the Department of Electrical and Computer Engineering of the University of Illinois, will make a presentation before the Commission, interested members of the staff, and interested members of the public. The presentation will concern PowerWorld, a power flow simulation package. PowerWorld is intended to simulate the operation of a hypothetical area in an interconnected power system over a specified period of time ranging from several hours to a day. PowerWorld was developed to present the basics of power system operations and control to individuals with a nontechnical background.

The presentation will be held on May 31, 1995, from 1 pm to 3 pm, in the Commission Meeting Room, 9th Floor, 825 North Capitol Street NE., Washington, DC 20426.

Linwood A. Watson, Jr.,

Acting Secretary.

[FR Doc. 95–13471 Filed 6–1–95; 8:45 am]

BILLING CODE 6717–01–M

[Docket No. RP95–233–001]

Colorado Interstate Gas Go.; Compliance Filing

May 26, 1995.

Take notice that on May 23, 1995, Colorado Interstate Gas Company (CIG), tendered for filing to become part of its FERC Gas Tariff, First Revised Volume No. 1, the following revised tariff sheets, effective May 15, 1995:

Substitute Third Revised Sheet No. 35
Substitute Third Revised Sheet No. 57
Substitute Second Revised Sheet No. 69
Substitute Third Revised Sheet No. 101
Substitute First Revised Sheet No. 123
Substitute Third Revised Sheet No. 127
Substitute Second Revised Sheet No. 128

CIG states that the new tariff sheets are filed to comply with Ordering Paragraph (B) of the order issued May 12, 1995 in Docket No. RP95–233–000. The order required CIG to state, in situations involving Northwest Pipeline Corporation, as an interconnecting pipeline, Transporter's nomination deadline is 9:30 a.m. Mountain Time, 30 minutes before Northwest Pipeline Corporation's nomination deadline.

CIG states that a copy of this filing was served upon all parties in this proceeding.

Any person desiring to protest said filing should file a protest with the Federal Energy Regulatory Commission, 825 North Capitol Street, NE., Washington, DC 20426, in accordance with § 385.211 of the Commission's rules of practice and procedure (18 CFR 385.211). All such protests should be filed on or before June 5, 1995. Protests will be considered by the Commission in determining the appropriate action to be taken, but will not serve to make protestants parties to the proceeding. Copies of this filing are on file with the Commission and are available for public inspection in the public reference room.

Linwood A. Watson, Jr.,

Acting Secretary.

[FR Doc. 95–13475 Filed 6–1–95; 8:45 am]

BILLING CODE 6717–01–M

[Docket No. MG88–30–003]

Great Lakes Gas Transmission Co.; Filing

May 26, 1995.

Take notice that on May 23, 1995, Great Lakes Gas Transmission Company (Great Lakes) filed revised standards of conduct governing the business relationship between Great Lakes and its marketing/brokering affiliates.[1] Great Lakes also states that this filing is in compliance with the Commission's Order on Standards of Conduct issued May 4, 1995.[2]

Great Lakes states that copies of this filing have been mailed to all parties on the official service list compiled by the Secretary in this proceeding and to the public service commissions of the states of Michigan, Minnesota and Wisconsin.

Any person desiring to be heard or to protest said filing should file a motion to intervene or protest with the Federal Energy Regulatory Commission, 825 North Capitol Street, NE., Washington, DC 20426, in accordance with Rules 211 or 214 of the Commission's rules of practice and procedure (18 CFR 385.211 or 385.214). All such motions to intervene or protest should be filed on or before June 12, 1995. Protests will be considered by the Commission in determining the appropriate action to be taken but will not serve to make protestants parties to the proceeding. Any person wishing to become a party must file a motion to intervene. Copies of this filing are on file with the Commission and are available for public inspection.

Linwood A. Watson, Jr.,

Acting Secretary.

[FR Doc. 95–13474 Filed 6–1–95; 8:45 am]

BILLING CODE 6717–01–M

[Docket No. GT95–40–000]

Koch Gateway Pipeline Co.; Notice of Proposed Changes in FERC Gas Tariff

May 26, 1995

Take notice that on May 24, 1995, Koch Gateway Pipeline Company (Koch Gateway) tendered for filing to become part of its FERC Gas Tariff, Fifth Revised Volume No. 1, the following tariff sheets to be effective June 24, 1995;

Second Revised Sheet No. 5300
Second Revised Sheet No. 5301
Second Revised Sheet No. 5302
Second Revised Sheet No. 5303

Koch Gateway states that this filing is being submitted to update its Index of Purchasers with current information pursuant to § 154.41 of the Federal Energy Regulatory Commission's (''Commission'') regulations. On May 2, 1995, Koch Gateway filed tariff sheets updating its Index of Purchasers which contained inadvertent errors. On May 10, 1995, Koch Gateway filed a notice to withdraw the May 2, 1995 filing and is filing the above tariff sheets to replace the previous filing.

Koch Gateway states that the tariff sheets are being mailed to all of Koch Gateway's jurisdictional customers, interested state commissions and all intervenors in the May 2, 1995 filing.

Any person desiring to be heard or to protest said filing should file a motion to intervene or protest with the Federal Energy Regulatory Commission, 825 North Capitol Street, N.E., Washington, D.C. 20426, in accordance with §§ 385.214 and 385.211 of the Commission's regulations. All such motions or protests should be filed on or before June 5, 1995. Protests will be considered by the Commission in determining appropriate action to be taken, but will not serve to make protestants parties to the proceedings. Any person wishing to become a party must file a motion to intervene. Copies of this filing are on file with the Commission and are available for public inspection.

Linwood A. Watson, Jr.,

Acting Secretary.

[FR Doc. 95–13476 Filed 6–1–95; 8:45 am]

BILLING CODE 6717–01–M

[Docket Nos. RP94–423–000, RP94–119–000, et al.]

Texas Gas Transmission Corp.; Notice of Informal Settlement Conferences

May 26, 1995.

Take notice that an informal settlement conference will be convened in the above-captioned proceedings commencing at 10:00 am on May 31, 1995, continuing through June 1, 1995, at the offices of the Federal Energy Regulatory Commission, 810 First Street, NE, Washington, DC, for the purpose of exploring the possible settlement of the above-referenced dockets. For planning purposes, discussions on the GSR case, FERC Docket No. RP94–119–000 *et al.*, will commence at 1 pm on May 31.

Any party, as defined by 18 CFR 385.102(c), or any participant as defined in 18 CFR 385.102(b), is invited to attend. Persons wishing to become a party must move to intervene and receive intervenor status pursuant to the Commission's regulations (18 CFR 385.214).

For additional information please contact Michael D. Cotleur, (202) 208–1076, or Russell B. Mamone (202) 208–0744.

Linwood A. Watson, Jr.,

Acting Secretary.

[FR Doc. 95–13478 Filed 6–1–95; 8:45 am]

BILLING CODE 6717–01–M

[Project No. 2984–024]

S.D. Warren Co.; Notice of Extension of Comment Due Date

May 26, 1995.

On April 3, 1995, the S.D. Warren Company, licensee for the Eel Weir Project, submitted its Final Proposed Level Management Plan for Sebago Lake (Sebago Lake Plan). The plan was submitted in accordance with the Federal Energy Regulatory Commission's (Commission) Order on Complaint, dated August 4, 1994 and Order Granting Extension of Time, dated December 20, 1994 and March 7, 1995. The submittal, prepared by S.D. Warren Company, is a lake level plan that seeks to balance the various competing uses of Sebago Lake.

On April 26, 1995, the Commission issued a Notice of Reservoir Level Management Plan for Sebago Lake. The notice was published in the Portland Press Herald on May 12, 1995, and provided the public with the opportunity to comment on S.D. Warren's Sebago Lake Plan. The notice required that comments be filed no later than June 12, 1995.

By letter dated May 12, 1995, State of Maine Department of Environmental Protection (DEP) requested an extension of the comment due date from June 12, 1995 to June 30, 1995. In support of its request, the DEP states that it, in conjunction with the Maine Departments of Conservation, Environmental Protection, and Inland Fisheries and Wildlife, has scheduled a public meeting for May 31, 1995, in order to receive public comment on the Sebago Lake Plan. The DEP believes a 30-day comment period from the date of the public meeting is appropriate and sufficient to allow for public comment. Accordingly, the DEP requests an

---

[1] Standards of Conduct and Reporting Requirements for Transportation and Affiliate Transactions, Order No. 566, 59 FR 32885 (June 27, 1994), III FERC Stats. & Regs. ¶ 30,997 (June 17, 1994); Order No. 566–A, *order on rehearing*, 59 FR 52896 (October 20, 1994), 69 FERC ¶ 61,044 (October 14, 1994); Order No. 566–B, *order on rehearing*, 59 FR 65707, (December 21, 1994); 69 FERC ¶ 61,334 (December 14, 1994); *appeal docketed sub nom. Conoco, Inc.* v. *FERC*, D.C. Cir. No. 94–1745 (December 13, 1994).

[2] 71 FERC ¶ 61,141 (1995).

extension of the comment deadline from June 12 to June 30, 1995.

The Commission finds the DEP's request reasonable and will hereby extend the comment due date for the Sebago Lake Plan from June 12, 1995 to June 30, 1995.

Linwood A. Watson, Jr.,

Acting Secretary.

[FR Doc. 95–13473 Filed 6–1–95; 8:45 am]

BILLING CODE 6717–01–M

[Docket No. RP95–303–000]

Williams Natural Gas Co.; Notice of Proposed Changes in FERC Gas Tariff

May 26, 1995.

Take notice that on May 24, 1995, Williams Natural Gas Company (WNG) tendered for filing to become part of its FERC Gas Tariff, Second Revised Volume No. 1, the following tariff sheets:

Third Revised Sheet No. 1
Fourth Revised Sheet No. 2
First Revised Sheet No. 144
Third Revised Sheet No. 200
First Revised Sheet Nos. 201–203
Second Revised Sheet No. 204
Third Revised Sheet No. 205
Second Revised Sheet Nos. 206 and 207
First Revised Sheet Nos. 212–216 and 218–220
Second Revised Sheet No. 226
Third Revised Sheet Nos. 227 and 228
Second Revised Sheet No. 229
First Revised Sheet Nos. 231–234, 236, 238, 239 and 241
Second Revised Sheet No. 243
First Revised Sheet No. 249
Second Revised Sheet No. 250
First Revised Sheet No. 257–263
Second Revised Sheet No. 264
First Revised Sheet No. 265, 269, 403, 411, 419, 426, 432, 433, 438–442, 444, 449, 455, and 456
Original Sheet No. 456A
First Revised Sheet Nos. 458, 461, and 490

The proposed effective date of these tariff sheets is July 1, 1995.

WNG states that the purpose for the instant filing is to make general maintenance changes to WNG's FERC Gas Tariff, second Revised Volume No. 1. WNG has operated under Order No. 636 since October 1, 1993, when its restructuring in Docket No. RS92–12 was made effective. WNG has gained experience operating under Order No. 636, during this nineteen-month period, and has found minor changes that need to be made to its tariff.

WNG states that a copy of its filing was served on all jurisdictional customers and interested state commissions.

Any person desiring to be heard or to protest said filing should file a motion to intervene or a protest with the Federal Energy Regulatory Commission, 825 North Capitol Street, N.E., Washington, D.C. 20426, in accordance with Sections 385.214 and 385.211 of the Commission's Rules and Regulations. All such motions or protests should be filed on or before June 5, 1995. Protests will be considered by the Commission in determining the appropriate action to be taken, but will not serve to make protestants parties to the proceeding. Any person wishing to become a party must file a motion to intervene. Copies of this filing are on file with the Commission and are available for public inspection in the Public Reference Room.

Linwood A. Watson, Jr.

Acting Secretary.

[FR Doc. 95–13477 Filed 6–1–95; 8:45 am]

BILLING CODE 6717–01–M

ENVIRONMENTAL PROTECTION AGENCY

[ER–FRL–4723–6]

Environmental Impact Statements and Regulations; Availability of EPA Comments

Availability of EPA comments prepared April 24, 1995 Through April 28, 1995 pursuant to the Environmental Review Process (ERP), under Section 309 of the Clean Air Act and Section 102(2)(c) of the National Environmental Policy Act as amended. Requests for copies of EPA comments can be directed to the Office of Federal Activities at (202) 260–5076.

An explanation of the ratings assigned to draft environmental impact statements (EISs) was published in FR dated April 14, 1995 (72 FR 19047).

Draft EISs

ERP No. D–AFS–K65169–CA Rating LO, Snowy Trail Off-Highway Vehicle Re-Route, Smith Fork Parcel of Los Padres National Forest, Approval and Implementation, Mount Pinos Ranger District, Ventura County, CA.

Summary: EPA had no objection to the action but did request that the final document discuss the applicability of the Clean Water Act's stormwater permitting provisions.

ERP No. D–AFS–K67029–AZ Rating Eu3, Carlota Open-Pit Copper Mine Project, Construction and Operation, Plan of Operations and COE Section 404 Permit, Tonto National Forest, Gila and Pinal Counties, AZ.

Summary: EPA identified potential adverse impacts that would be unsatisfactory from the standpoint of environmental quality. Specific concerns relate to ground and surface water impacts. The proposal lacks an adequate alternative analysis and mitigation measures. EPA also expressed serious concerns regarding potential significant adverse effects on air quality and residential water supply wells in the project vicinity. EPA recommended that the document should be formally revised.

EPA No. D–FHW–J40135–MT Rating EC2, US 93 Highway Transportation Project, Improvements between Evaro and Polson, Funding and COE Section 404 Permit, Missoula and Lake Counties, MT.

Summary: EPA expressed environmental concerns regarding air quality, water quality, and the preservation of wetlands and environmentally sensitive areas. An air quality conformity determination for PM–10 emissions, and a comprehensive wetlands mitgation plan are needed.

ERP No. DS–FHW–K50007–CA Rating EC2, Benicia-Martinez Bridege Project, Transportation Improvements, Updated Information, I–680 from CA–4 in Martinez to I–80 in Fairfield, I–80 from Red Top Road to CA–12 east in Fairfield, I-780 from the I–680 Interchange in Benicia to Lemon St. In Vallego, Funding, US CGD Bridge and COE Section 10/404 Permits, Contra Costa and Solano Cos., CA.

Summary: EPA expressed environmental concerns regarding increased carbon monoxide and other air pollutant levels that would occur outside the limits of the bridge project. EPA also expressed concerns regarding wetlands, water quality and contaminated sediment. EPA requested that these issues be addressed and appropriate mitigation be implemented.

Dated: May 30, 1995.

William D. Dickerson,

Director, NEPA Compliance Division Office of Federal Activities.

[FR Doc. 95–13538 Dated 6–1–95; 8:45 am]

BILLING CODE 6560–50–M

[ER-FRL–4723–5]

Environmental Impact Statements; Notice of Availability

Responsible Agency: Office of Federal Activities, General Information (202) 260–5076 OR (202) 260–5075. Weekly receipt of Environmental Impact Statements Filed May 22, 1995 Through May 26, 1995 Pursuant to 40 CFR 1506.9.

EIS No. 950210, Draft EIS, GSA, CA, Fresno—United States Courthouse, Site Selection and Construction, City of Fresno, Fresno County, CA, Due:

July 17, 1995, Contact: Javad Soltani (415) 744–5255.

EIS No. 950211, Draft EIS, COE, TX, Gulf Intracoastal Waterway (Section 216 Study), Bank Protection and a Spill Containment Feature, Implementation, Aransas National Wildlife Refuge, Galveston District, Aransas, Calhoun and Refugio Counties, TX, Due: July 17, 1995, Contact: Richard Medina (409) 766–3044.

EIS No. 950212, Draft EIS, AFS, AZ, Pocket/Baker Ecosystem and Land Management Plan, Implementation, Mogollen Rim, Coconino National Forest, Coconino County, AZ, Due: July 17, 1995, Contact: John Gerritsma (520) 354–2216.

EIS No. 950213, Draft EIS, AFS, MT, Bass Lake Dam Reconstruction, Operation and Maintenance, Temporary-Use-Permit, Bitterroot National Forest, Stevensville Ranger District, Ravalli County, MT, Due: July 17, 1995, Contact: David J. Silvieus (406) 777–5461.

EIS No. 950214, Draft EIS, AFS, ID, Main Salmon Post-Fire Project, Implementation, Payette National Forest, New Meadows and McCall Ranger District, Idaho County, ID, Due: July 17, 1995, Contact: Kimberly Brandel (208) 347–0300.

EIS No. 950215, Final EIS, FHW, WA, WA–525/Paine Field Boulevard Project, Improvements, between WA–99 to WA–526, Funding and COE Section 404 Permit, City of Mukitteo, Snohomish County, WA, Due: July 03, 1995, Contact: Gene Fong (360) 753–2120.

EIS No. 950216, Final EIS, AFS, ID, Charlie Tyson Ecosystem Management Project, Implementation, Idaho Panhandle National Forests, St. Maries Ranger District, Charlie Creek, Benewah County, ID, Due: July 03, 1995, Contact: Tracy Gravelle (208) 245–2531.

EIS No. 950217, Draft Supplement, RUS, FL, Hardee Unit 3 440 Megawatt (MW) Natural Gas and Oil Fired Combined Cycle Electric Power Station Construction and Operation, Funding, Approval and NPDES Permit Issuance, Hardee County, FL, Due: July 17, 1995, Contact: Robert Quigel (202) 720–1784.

EIS No. 950218, DRAFT EIS, AFS, MT, North Fork Decision Area Fire Recovery Project, Timber Salvage, Implementation, Kootenai National Forest, Rexford Ranger District, Lincoln County, MT, Due: July 17, 1995, Contact: Robert J. Thompson (406) 296–2536.

EIS No. 950219, DRAFT EIS, SCS, UT, Muddy Creek Orderville Watershed Plan, Offsite Salt and Sediment Damage to Water Quality in the Virgin River and the Colorado River, Wildlife Habitat and Rangeland Productivity Enhancements, Approvals and Funding, Kane County, UT, Due: July 17, 1995, Contact: Phillip J. Nelson (801) 524–5050.

EIS No. 950220, FINAL EIS, AFS, MT, Running Wolf Timber Sales, Implementation, Lewis and Clark National Forest, Judith Ranger District, Stanford, Judith Basin County, MT, Due: July 03, 1995, Contact: Rick M. Abt (406) 566–2292.

EIS No. 950221, FINAL EIS, FHW, TX, US 82 Highway (East-West Freeway in the City of Lubbock) Transportation Improvements from South of Loop 289 to East of I–27 and Relocation of the Seagraves, Whiteface and Lubbock Railroad, Funding and Right-of-Way Grant, Lubbock County, TX, Due: July 03, 1995, Contact: Lubin M. Quinones (512) 482–5988.

EIS No. 950222, FINAL EIS, BLM, CA, Briggs Open Pit Heap Leach Gold Mine Project, Construction and Operation, NPDES Permit and COE Section 404 Permit, Inyo County, CA, Due: July 03, 1995, Contact: Ahmed Mohsen (619) 384–5400.

Dated: May 30, 1995.

William D. Dickerson,

Director, NEPA Compliance Division, Office of Federal Activities.

[FR Doc. 95–13537 Filed 6–1–95; 8:45 am]

BILLING CODE: 6560–50–U

FEDERAL EMERGENCY MANAGEMENT AGENCY

[FEMA–1049–09]

Louisiana; Amendment to Notice of a major Disaster Declaration

AGENCY: Federal Emergency Management Agency (FEMA).

ACTION: Notice.

SUMMARY: This notice amends the notice of a major disaster for the State of Louisiana (FEMA–1049–DR), dated May 10, 1995, and related determinations.

EFFECTIVE DATE: May 20, 1995.

FOR FURTHER INFORMATION CONTACT: Pauline C. Campbell, Response and Recovery Directorate, Federal Emergency Management Agency, Washington, DC 20472, (202) 646–3606.

SUPPLEMENTARY INFORMATION: Notice is hereby given that, effective this date and pursuant to the authority vested in the Director of the Federal Emergency Management Agency under Executive Order 12148, I hereby appoint R. Dell Greer of the Federal Emergency Management Agency to act as the Federal Coordinating Officer for this declared disaster.

This action terminates my appointment of G. Clay Hollister as Federal Coordinating Officer for this disaster.

(Catalog of Federal Domestic Assistance No. 83.516, Disaster Assistance.)

James L. Witt,

Director.

[FR Doc. 95–13520 Filed 6–1–95; 8:45 am]

BILLING CODE 6718–02–M

[FEMA–1049–DR]

Louisiana; Amendment to Notice of a Major Disaster Declaration

AGENCY: Federal Emergency Management Agency (FEMA).

ACTION: Notice.

SUMMARY: This notice amends the notice of a major disaster for the State of Louisiana, (FEMA–1049–DR), dated May 10, 1995 and related determinations.

EFFECTIVE DATE: May 22, 1995.

FOR FURTHER INFORMATION CONTACT: Pauline C. Campbell, Response and Recovery Directorate, Federal Emergency Management Agency, Washington, DC 20472, (202) 646–3606.

SUPPLEMENTARY INFORMATION: The notice of a major disaster for the State of Louisiana dated May 10, 1995, is hereby amended to include the following areas determined to have been adversely affected by the catastrophe declared a major disaster by the President of his declaration of May 10, 1995:

LaFourche and St. James Parishes for Public Assistance (already designated for Individual Assistance).

(Catalog of Federal Domestic Assistance No. 83.516, Disaster Assistance.)

G. Clay Hollister,

Deputy Associate Director, Response and Recovery Directorate.

[FR Doc. 95–13522 Filed 6–1–95; 8:45 am]

BILLING CODE 6718–02–M

FEMA–1051–DR]

Mississippi; Major Disaster and Related Determinations

AGENCY: Federal Emergency Management Agency (FEMA).

ACTION: Notice.

SUMMARY: This is a notice of the Presidential declaration of a major disaster for the State of Mississippi (FEMA–1051–DR), dated May 12, 1995, and related determinations.

EFFECTIVE DATE: May 12, 1995.

FOR FURTHER INFORMATION CONTACT: Pauline C. Campbell, Response and Recovery Directorate, Federal Emergency Management Agency, Washington, DC 20472, (202) 646–3606.

SUPPLEMENTARY INFORMATION: Notice is hereby given that, in a letter dated May 12, 1995, the President declared a major disaster under the authority of the Robert T. Stafford Disaster Relief and Emergency Assistance Act (42 U.S.C. 5121 *et seq.*), as follows.

I have determined that the damage in certain areas of the State of Mississippi, resulting from severe storms, tornadoes, and flooding on May 8, 1995, and continuing is of sufficient severity and magnitude to warrant a major disaster declaration under the Robert T. Stafford Disaster Relief and Emergency Assistance Act (''the Stafford Act''). I, therefore, declare that such a major disaster exists in the State of Mississippi.

In order to provide Federal assistance, you are hereby authorized to allocate from funds available for these purposes, such amounts as you find necessary for Federal disaster assistance and administrative expenses.

You are authorized to provide Individual Assistance in the designated areas. Public Assistance may be added at a later date, if warranted. Consistent with the requirement that Federal assistance be supplemental, any Federal funds provided under the Stafford Act for Public Assistance will be limited to 75 percent of the total eligible costs.

The time period prescribed for the implementation of section 310(a), Priority to Certain Applications for Public Facility and Public Housing Assistance, 42 U.S.C. 5153, shall be for a period not to exceed six months after the date of this declaration.

Notice is hereby given that pursuant to the authority vested in the Director of the Federal Emergency Management Agency under Executive Order 12148, I hereby appoint Michael J. Polny of the Federal Emergency Management Agency to act as the Federal Coordinating Officer for this declared disaster.

I do hereby determine the following areas of the State of Mississippi to have been affected adversely by this declared major disaster:

The counties of Hancock, Harrison and Pearl River for Individual Assistance.

(Catalog of Federal Domestic Assistance No. 83.516, Disaster Assistance.)

James L. Witt,

Director.

[FR Doc. 95–13521 Filed 6–1–95; 8:45 am]

BILLING CODE 6718–02–M

FEDERAL MARITIME COMMISSION

Ocean Freight Forwarder License Revocations

Notice is hereby given that the following ocean freight forwarder licenses have been revoked by the Federal Maritime Commission pursuant to section 19 of the Shipping Act of 1984 (46 U.S.C. app. 1718) and the regulations of the Commission pertaining to the licensing of ocean freight forwarders, 46 CFR part 510.

License Number: 3658.

Name: Worldwide International Forwarders, Inc.

Address: 1168–150th Court North, Jupiter, FL 33478.

Date Revoked: May 10, 1995.

Reason: Surrendered license voluntarily.

License Number: 1352

Name: Independent Cargo Services, Inc.

Address: 20 Lafayette Street, Carteret, NJ 07008.

Date Revoked: May 17, 1995.

Reason: Surrendered license voluntarily.

Bryant L. VanBrakle,

Director, Bureau of Tariffs, Certification and Licensing.

[FR Doc. 95–13560 Filed 6–1–95; 8:45 am]

BILLING CODE 6730–01–M

FEDERAL RESERVE SYSTEM

Agency Forms Under Review

AGENCY: Board of Governors of the Federal Reserve System.

ACTION: Notice.

BACKGROUND: On June 15, 1984, the Office of Management and Budget (OMB) delegated to the Board of Governors of the Federal Reserve System (Board) its approval authority under the Paperwork Reduction Act of 1980, as per 5 CFR 1320.9, to approve of and assign OMB control numbers to collection of information requests and requirements conducted or sponsored by the Board under conditions set forth in 5 CFR 1320.9. Board-approved collections of information will be incorporated into the official OMB inventory of currently approved collections of information. A copy of the OMB 83-I and supporting statement and the approved collection of information instruments will be placed into OMB's public docket files. The following forms, which are being handled under this delegated authority, have received initial Board approval and are hereby published for comment. At the end of the comment period, the proposed information collections, along with an analysis of comments and recommendations received, will be submitted to the Board for final approval under OMB delegated authority.

DATES: Comments must be submitted on or before July 1, 1995.

ADDRESSES: Comments, which should refer to the OMB Docket number (or Agency form number in the case of a new information collection that has not yet been assigned an OMB number), should be addressed to Mr. William W. Wiles, Secretary, Board of Governors of the Federal Reserve System, 20th and C Streets, N.W., Washington, D.C. 20551, or delivered to the Board's mail room between 8:45 a.m. and 5:15 p.m., and to the security control room outside of those hours. Both the mail room and the security control room are accessible from the courtyard entrance on 20th Street between Constitution Avenue and C Street, N.W. Comments received may be inspected in room M-P-500 between 9:00 a.m. and 5:00 p.m., except as provided in section 261.8 of the Board's Rules Regarding Availability of Information, 12 CFR 261.8(a).

A copy of the comments may also be submitted to the OMB desk officer for the Board: Milo Sunderhauf, Office of Information and Regulatory Affairs, Office of Management and Budget, New Executive Office Building, Room 3208, Washington, D.C. 20503.

FOR FURTHER INFORMATION CONTACT: A copy of the proposed form and instructions, the Paperwork Reduction Act Submission (OMB 83-I), supporting statement, and other documents that will be placed into OMB's public docket files once approved may be requested from the agency clearance officer, whose name appears below.

Mary M. McLaughlin, Federal Reserve Board Clearance Officer (202-452-3829), Division of Research and Statistics, Board of Governors of the Federal Reserve System, Washington, D.C. 20551. For the hearing impaired *only*, Telecommunications Device for the Deaf (TDD) Dorothea Thompson (202-452-3544), Board of Governors of the Federal Reserve System, Washington, D.C. 20551.

Proposal to approve under OMB delegated authority the extension, with revision, of the following reports:

1. Report title: Registration Statement for Persons who Extend Credit Secured by Margin Stock, Deregistration Statement for Persons Registered Pursuant to Regulation G, and Annual Report.

Agency form numbers: FR G-1, FR G-2, and FR G-4

OMB Docket number: 7100-0011
Frequency: On occasion
Reporters: Individuals and businesses
Annual reporting hours: 1,478
Estimated average hours per response: 1.90
Number of respondents: 778
Small businesses are affected.

General description of report: This information collection is mandatory (15 U.S.C. 78g). The FR G-1 and FR G-4 are given confidential treatment (5 U.S.C. 552(b)(4)). The FR G-2 does not request confidential information.

Abstract: Regulation G was adopted in response to concerns of the Federal Reserve and the Securities Exchange Commission that unregulated lenders were circumventing the margin requirements of Regulations T and U. These reports are event-generated and are filed with the appropriate Federal Reserve Bank. The proposed revisions include a further breakdown of an existing item regarding employee stock option, purchase, and ownership plans on the FR G-1 and FR G-4, the addition of the registrant's telephone number to the FR G-2, and clarifications to the existing reporting instructions for the FR G-1 and FR G-4. The proposed revisions are expected to have no appreciable effect on respondent burden for these reports.

Proposal to approve under OMB delegated authority the extension, without revision, of the following reports:

1. Report title: Statement of Purpose for an Extension of Credit Secured by Margin Stock by a Person Subject to Registration under Regulation G.
Agency form number: FR G-3
OMB Docket number: 7100-0018
Frequency: On occasion
Reporters: Individuals and businesses
Annual reporting hours: 2,240
Estimated average hours per response: .16
Number of respondents: 700
Small businesses are affected.

General description of report: This information collection is mandatory (15 U.S.C. 78g). Since the FR G-3 is not filed with the Federal Reserve, no issue of confidentiality arises.

Abstract: Regulation G was adopted in response to concerns of the Federal Reserve and the Securities Exchange Commission that unregulated lenders were circumventing the margin requirements of Regulations T and U. This report is event-generated and is not filed with the Federal Reserve System but retained by the lender. The report is needed to ensure that a Regulation G lender does not extend credit to purchase or carry securities in excess of the amount permitted by the Federal Reserve Board pursuant to Regulation G and to ensure that a borrower does not violate Regulation X.

2. Report title: Agreement of Domestic and Foreign Nonmember Banks.
Agency form number: FR T-1, T-2
OMB Docket number: 7100-0191
Frequency: On occasion
Reporters: Nonmember Banks
Annual reporting hours: .50
Estimated average hours per response: .50
Number of respondents: 1
Small businesses are not affected.

General description of report: This information collection is mandatory (15 U.S.C. 78h) and is not given confidential treatment.

Abstract: The Federal Reserve adopted Regulation T, ''Credit by Brokers and Dealers,'' in 1934 to regulate extension of credit by and to brokers and dealers; it also covers related transactions within the Federal Reserve's authority under the act. It imposes, among other obligations, initial margin requirements and payment rules on securities transactions. Pursuant to Section 8 of the Securities Exchange Act of 1934 and Regulation T, domestic and foreign banks that are not members of the Federal Reserve System are required to file a FR T-1, T-2 with the appropriate Federal Reserve Bank in the event that they wish to extend credit to brokers/dealers using exchange-traded securities as collateral. In addition, the form must be filed by foreign nonmember banks that issue letters of credit used as deposits against borrowings of securities by brokers-dealers. The FR T-1, T-2 requires a domestic or foreign nonmember bank to state that it is a ''bank'' as defined in section 3(a)(6) of the Securities Exchange Act of 1934, and list the state or country in which it was organized and the location of its principal place of business. No substantive changes are being proposed to the FR T-1, T-2. However, the Federal Reserve proposes to add the phrase ''(indicate state for domestic bank or country for foreign bank)'' to explicitly state this requirement of Regulation T.

3. Report title: Statement of Purpose of Extension of Credit by a Creditor (under Regulation T).
Agency form number: FR T-4
OMB Docket number: 7100-0019
Frequency: On occasion
Reporters: Individuals and businesses
Annual reporting hours: 42
Estimated average hours per response: .17
Number of respondents: 250
Small businesses are affected.

General description of report: This information collection is mandatory (15 U.S.C. 78g). Because the FR T-4 is not filed with the Federal Reserve, no issue of confidentiality arises.

Abstract: The Federal Reserve adopted Regulation T, ''Credit by Brokers and Dealers,'' in 1934 to regulate extension of credit by and to brokers and dealers; it also covers related transactions within the Federal Reserve's authority under the act. It imposes, among other obligations, initial margin requirements and payment rules on securities transactions. Regulation T presumes that any extension of credit by a broker/dealer to a customer is made for the purpose of purchasing, trading, or carrying securities, and thus is subject to the Board's margin requirements. Customers and creditors are required to complete and retain the FR T-4 in the event that the customer can rebut the presumption and the creditor is thereby permitted to extend credit in excess of the amount otherwise permitted under Regulation T. The FR T-4 solicits information from borrowers regarding the purpose of each loan, and from creditors identifying collateral. No changes are proposed for the FR T-4 reporting form.

4. Report title: Statement of Purpose for an Extension of Credit Secured by Margin Stock.
Agency form number: FR U-1
OMB Docket number: 7100-0115
Frequency: On occasion
Reporters: Individuals and businesses
Annual reporting hours: 157,853
Estimated average hours per response: .07
Number of respondents: 10,637
Small businesses are not affected.

General description of report: This information collection is mandatory (15 U.S.C. 78g). Since the FR U-1 is not filed with the Federal Reserve no issue of confidentiality arises.

Abstract: In 1936, the Federal Reserve adopted Regulation U, ''Credit by Banks for the Purpose of Purchasing or Carrying Margin Stock,'' as a companion to Regulation T which applies to securities credit extended by brokers/dealers. Regulation U imposes restrictions upon ''banks'' (as defined in section 221.2(b) of Regulation U) that extend credit for the purpose of buying or carrying margin stock if the credit is secured directly or indirectly by margin stock. Banks may not extend more than the minimum loan value of the collateral securing such credit, as set by the Federal Reserve in section 221.8 of Regulation U. Regulation U requires that a purpose statement be completed and retained in the event that a bank extends credit in an amount exceeding $100,000

secured directly or indirectly by margin stock.

In all cases, the FR U-1 collects the following loan information from the borrower:

(1) The amount of credit being obtained; and

(2) Whether the loan is to purchase or carry margin stocks and, if not, the purpose of the loan. If the borrower affirms that the purpose of the loan is to purchase or carry margin stocks, the bank provides the following collateral information in Part II:

(3) The number of shares of stock serving as collateral;

(4) The name of the stock (issue);

(5) The market price per share;

(6) The date and source of valuation (not required if market value is obtained from regularly published information in a journal of general circulation or from an automated quotation system);

(7) The total market value per issue; and

(8) The amount of any other collateral securing the loan. No substantive changes are proposed for the FR U-1 reporting form. However, the Federal Reserve proposes to

(i) Revise the phrase ''maximum loan value of margin stock is ... per cent'' for items 1 and 2 of Part II to ''maximum loan value of margin stock is 50 per cent,'' and

(ii) Add the phrase ''or from an automated quotation system.'' to the note below item 3.

5. Report title: Written Security Program for State Member Banks.
Agency form number: FR 4004
OMB Docket number: 7100-0112
Frequency: Annual
Reporters: State member banks
Annual reporting hours: 484
Estimated average hours per response: 0.5
Number of respondents: 968
Small businesses are affected.

General description of report: This recordkeeping requirement is mandatory (12 U.S.C. §§ 1882(a), 248(a)(1), and 325). Because written security programs are maintained at state member banks, no issue of confidentiality under the Freedom of Information Act arises.

Abstract: The Congress adopted the Bank Protection Act of 1968 (12 U.S.C. 1882) to promulgate rules establishing minimum standards for banks as to the installation, maintenance, and operation of security devices and procedures to discourage robberies, burglaries, and larcenies and to assist in the identification and apprehension of persons who commit such acts.

In response to the passage of the Bank Protection Act (Act), each of the federal financial institution supervisory agencies established minimum standards for security devices and procedures. The requirements established by the Board of Governors of the Federal Reserve System in 1969 for state member banks are contained in Regulation P. In the regulation, the Federal Reserve requires the board of directors of each state member bank to designate a security officer to assume the responsibility for the development, administration, and maintenance of a written security program. The original Act also contained provisions requiring financial institutions to submit periodic reports to their primary federal supervisory agency with respect to the installation, maintenance, and operation of security devices and the development of security procedures.

The Financial Institutions Reform, Recovery, and Enforcement Act of 1989 (FIRREA) includes provisions that amend the Act: eliminating the requirement that each bank submit periodic reports to its regulator, but retaining the requirement that each bank maintain a written security program. The Federal Reserve amended Regulation P in 1991 to reflect this change. Each state member bank must maintain a written security program in its records. This program should include a requirement to install security devices and should establish procedures that satisfy minimum standards in the regulation, with the security officer determining the need for additional security devices and procedures based on the location of the banking office. No changes are being proposed to the recordkeeping requirement.

6. Report title: Annual Report on Status of Disposition of Assets Acquired in Satisfaction of Debts Previously Contracted.
Agency form number: FR 4006
OMB Docket number: 7100-0129
Frequency: Annual
Reporters: Bank holding companies that have acquired assets or shares through foreclosure in the ordinary course of collecting a debt previously contracted.
Annual reporting hours: 3,000
Estimated average hours per response: 5
Number of respondents: 600
Small businesses are affected.

General description of report: This information collection is mandatory (12 U.S.C. 1843(c)(2) and 1844(c) and may be given confidential treatment upon request (5 U.S.C. 552(b)(4)).

Abstract: The Federal Reserve has statutory responsibility for regulation and supervision of bank holding companies (BHCs) under the Bank Holding Company Act of 1956, as amended (Act). Under the Act, the Federal Reserve must ensure that impermissible assets are divested in a manner consistent with the statute. The Act sets forth the time frame within which assets and shares acquired in collecting a debt previously contracted (DPC) must be divested.

The Federal Reserve does not require BHCs to obtain prior approval for their acquisition of DPC shares or assets so long as they divest them within two years of the date of their initial acquisition. If the BHC is unsuccessful in divesting them within the two-year period, it must request and obtain approval to continue to hold them. The Board may extend the initial two-year period for up to three additional one-year periods. Further, for real estate or other DPC assets that are demonstrated to have value and marketability characteristics similar to real estate, the Board may permit additional extensions for up to five years (for a total of ten years).

The Federal Reserve does require that the BHC make good faith efforts to dispose of DPC shares or assets and notify it annually of the progress being made with respect to their disposition. Beginning two years after the date of acquisition of DPC assets or shares, the BHC must report annually to the Federal Reserve on its efforts to divest them.

The Federal Reserve uses the information to determine:

(1) Whether a BHC has made timely, good faith efforts to comply with the requirements of the Act; and

(2) The effect that the sale or retention of the property will have on the organization. This report serves to identify potentially unsound situations and to encourage timely compliance with the divestiture requirement as contained in the statutes and regulation. The Federal Reserve monitors the BHC's efforts to effect an orderly divestiture, and may require divestiture before the end of the approved period if supervisory concerns warrant such action.

The reporting requirement only applies to those BHCs that fail to divest DPC shares or assets within two years. They must file an annual report on their efforts to accomplish divestiture of the shares or assets. The report must describe the efforts made to date to effect divestiture (including reasons for any delay in the pace of divestiture), and must include financial and descriptive data with respect to assets as well as the sales price of divested assets.

Affected BHCs file the annual report on their progress toward divestiture with their district Federal Reserve Bank. The due date for the report is based on the date the BHC acquired the DPC

assets or shares. The BHC submits the information in a letter format, which is neither stored electronically nor published. No changes are being proposed to the FR 4006 reporting requirement.

Board of Governors of the Federal Reserve System, May 25, 1995

William W. Wiles,

Secretary of the Board.

[FR Doc. 95–13443 Filed 6–1–95; 8:45AM]

Billing Code 6210–01–F

DEPARTMENT OF HEALTH AND HUMAN SERVICES

Administration for Children and Families, Commission on Child and Family Welfare

Notice of Public Meetings

AGENCY: Administration for Children and Families, DHHS.

SUMMARY: The Commission on Child and Family Welfare will hold meetings at the following locations:

On June 13–15, 1995: Ramada Hotel, 901 N. Fairfax St., Alexandria, Virginia 22314.

On September 13–15, 1995: Embassy Suites in Crystal City, 1300 Jefferson Davis Highway, Arlington, Virginia 22202.

These meetings are open to the public. Public comments will be accepted at the conclusion of the second day of each of the above meetings, June 14 and September 14 respectively, at approximately 5:00 p.m. Written statements will also be accepted. If a sign language interpreter is needed, contact Justine Truesdale at (202) 401–5592 no later than 14 days prior to each meeting.

FOR FURTHER INFORMATION CONTACT: Justine Truesdale, Commission on Child and Family Welfare, 370 L'Enfant Promenade SW., Aerospace Bldg., 6th Floor West, Room 616, Washington, D.C. 20447, (202) 401–5592.

SUPPLEMENTARY INFORMATION: During these meetings the Commission will consider topics and issues for the purpose of preparing its final report, as required under Public Law 102–521.

Dated: May 26, 1995.

Marianne Rufty,

Executive Director, Commission on Child and Family Welfare.

[FR Doc. 95–13508 Filed 6–1–95; 8:45 am]

BILLING CODE 4184–01–M

Public Health Service

Agency Forms Undergoing Paperwork Reduction Act Review

Each Friday the Public Health Service (PHS) publishes a list of information collection requests under review, in compliance with the Paperwork Reduction Act (44 U.S.C. Chapter 35). To request a copy of these requests, call the PHS Reports Clearance Office on (202) 690–7100.

The following requests have been submitted for review since the list was last published on May 19.

1. PHS Supplements to Application for Federal Assistance (SF 424)—0937–0189—Extension, no change—The checklist, Program Narrative, and Public Health System Impact Statement are part of application forms used to elicit information primarily from governmental and other non-profit organizations requesting financial assistance from PHS grant programs. Respondents: Not-for-profit institutions; State, Local or Tribal Government; Number of Respondents: 7,643; Number of Responses per Respondent: 1; Average Burden per Response: 4.12 hours; Estimated Annual burden: 32,215. Send comments to James Scanlon, Office of the Assistant Secretary for Health, Room 737–F, Humphrey Building, 200 Independence Ave., SW., Washington, DC 20201.

Written Comments and recommendations concerning the proposed information collections should be sent within 30 days of this notice directly to the individual designated.

Dated: May 26, 1995.

James Scanlon,

Director, Data Policy Staff, Office of the Assistant Secretary for Health and PHS Reports Clearance Officer.

[FR Doc. 95–13515 Filed 6–1–95; 8:45 am]

BILLING CODE 4160–01–M

DEPARTMENT OF HOUSING AND URBAN DEVELOPMENT

Office of the Assistant Secretary for Community Planning and Development

[Docket No. N–95–1917; FR–3778–N–39]

Federal Property Suitable as Facilities To Assist the Homeless

AGENCY: Office of the Assistant Secretary for Community Planning and Development, HUD.

ACTION: Notice.

SUMMARY: This notice identifies unutilized, underutilized, excess, and surplus Federal property reviewed by HUD for suitability for possible use to assist the homeless.

ADDRESSES: For further information, contact David Pollack, room 7256, Department of Housing and Urban Development, 451 Seventh Street SW, Washington, DC 20410; telephone (202) 708–1234; TDD number for the hearing- and speech-impaired (202) 708–2565 (these telephone numbers are not toll-free), or call the toll-free Title V information line at 1–800–927–7588.

SUPPLEMENTARY INFORMATION: In accordance with 56 FR 23789 (May 24, 1991) and section 501 of the Stewart B. McKinney Homeless Assistance Act (42 U.S.C. 11411), as amended, HUD is publishing this Notice to identify Federal buildings and other real property that HUD has reviewed for suitability for use to assist the homeless. The properties were reviewed using information provided to HUD by Federal landholding agencies regarding unutilized and underutilized buildings and real property controlled by such agencies or by GSA regarding its inventory of excess or surplus Federal property. This Notice is also published in order to comply with the December 12, 1988 Court Order in *National Coalition for the Homeless* v. *Veterans Administration*, No. 88–2503–OG (D.D.C.).

Properties reviewed are listed in this Notice according to the following categories: Suitable/available, suitable/unavailable, suitable/to be excess, and unsuitable. The properties listed in the three suitable categories have been reviewed by the landholding agencies, and each agency has transmitted to HUD: (1) Its intention to make the property available for use to assist the homeless, (2) its intention to declare the property excess to the agency's needs, or (3) a statement of the reasons that the property cannot be declared excess or made available for use as facilities to assist the homeless.

Properties listed as suitable/available will be available exclusively for homeless use for a period of 60 days from the date of this Notice. Homeless assistance providers interested in any such property should send a written expression of interest to HHS, addressed to Judy Breitman, Division of Health Facilities Planning, U.S. Public Health Service, HHS, room 17A–10, 5600 Fishers Lane, Rockville, MD 20857; (301) 443–2265. (This is not a toll-free number.) HHS will mail to the interested provider an application packet, which will include instructions

for completing the application. In order to maximize the opportunity to utilize a suitable property, providers should submit their written expressions of interest as soon as possible. For complete details concerning the processing of applications, the reader is encouraged to refer to the interim rule governing this program, 56 FR 23789 (May 24, 1991).

For properties listed as suitable/to be excess, that property may, if subsequently accepted as excess by GSA, be made available for use by the homeless in accordance with applicable law, subject to screening for other Federal use. At the appropriate time, HUD will publish the property in a Notice showing it as either suitable/available or suitable/unavailable.

For properties listed as suitable/unavailable, the landholding agency has decided that the property cannot be declared excess or made available for use to assist the homeless, and the property will not be available.

Properties listed as unsuitable will not be made available for any other purpose for 20 days from the date of this Notice. Homeless assistance providers interested in a review by HUD of the determination of unsuitability should call the toll free information line at 1–800–927–7588 for detailed instructions or write a letter to David Pollack at the address listed at the beginning of this Notice. Included in the request for review should be the property address (including zip code), the date of publication in the **Federal Register**, the landholding agency, and the property number.

For more information regarding particular properties identified in this Notice (*i.e.*, acreage, floor plan, existing sanitary facilities, exact street address), providers should contact the appropriate landholding agencies at the following addresses: Department of the Interior: Lola D. Knight, Property Management Specialist, Department of the Interior, 1849 C Street, NW, Mail Stop 552–MIB, Washington, DC 20240; U.S. Air Force: Carol Xander, Air Force Real Estate Agency (Area/MI), Bolling AFB, 172 Luke Avenue, Suite 104, Building 5683, Washington, DC 20332–5113; (202) 767–4034; (These are not toll-free numbers).

Dated: May 26, 1995.

Jacquie M. Lawing,

Deputy Assistant Secretary for Economic Development.

Title V, Federal Surplus Property Program, Federal Register Report For 06/02/95

Suitable/Available Properties

Buildings (by State)

California

Brown House 07–129
Highway 199
Hiouchi Co: Del Norte CA 95531–
Landholding Agency: Interior
Property Number: 619520030
Status: Excess
Comment: 1 story wood frame residence, off-site removal only

Crist House 07–130
Highway 199
Hiouchi Co: Del Norte CA 95531–
Landholding Agency: Interior
Property Number: 619520031
Status: Excess
Comment: 1269 sq. ft., story wood frame residence, off-site removal only, need repairs

Dunkley House 07–127
Highway 199
Hiouchi Co: Del Norte CA 95531–
Landholding Agency: 619520032
Status: Excess
Comment: 1269 sq. ft., 1 story wood frame residence, need repairs, off-site removal only

Graton House 07–125
Highway 199
Hiouchi Co: Del Norte CA 95531–
Landholding Agency: Interior
Property Number: 619520033
Status: Excess
Comment: 1665 sq. ft., 1 story wood frame residence, need repairs, off-site removal only

Schach House 07–105
Highway 199
Hiouchi Co: Del Norte CA 95531–
Landholding Agency: Interior
Property Number: 619520034
Status: Excess
Comment: 700 sq. ft., 1 story wood frame residence, off-site removal only, need repairs

Young House 07–132
Highway 199
Hiouchi Co: Del Norte CA 95531–
Landholding Agency: Interior
Property Number: 619520035
Status: Excess
Comment: 1442 sq. ft., 1 story wood frame residence, off-site removal only

Unsuitable Properties

Buildings (by State)

Alaska

Bldg. 142
Tin City Long Range Radar Site
Wales Co: Nome AK
Landholding Agency: Air Force
Property Number: 189520013
Status: Unutilized
Reason: Secured area, extensive deterioration

Bldg. 110
Tin City Long Range Radar Site
Wales Co: Nome AK
Landholding Agency: Air Force
Property Number: 189520014
Status: Unutilized
Reason: Secured area, extensive deterioration

Bldg. 646
King Salmon Airport
Naknek Co: Bristol Bay AK
Landholding Agency: Air Force
Property Number: 189520015
Status: Unutilized
Reason: Secured area, extensive deterioration

Bldg. 2541
Galena Airport
Galena Co: Yukon AK
Landholding Agency: Air Force
Property Number: 189520016
Status: Unutilized
Reason: Secured area, extensive deterioration

Bldg. 1770
Galena Airport
Galena Co: Yukon AK
Landholding Agency: Air Force
Property Number: 189520017
Status: Unutilized
Reason: Secured area, extensive deterioration

Bldg. 1
Lonely Dewline Site
Fairbanks Co: Fairbanks NS AK
Landholding Agency: Air Force
Property Number: 189520024
Status: Unutilized
Reason: Extensive deterioration

Bldg. 2
Lonely Dewline Site
Fairbanks Co: Fairbanks NS AK
Landholding Agency: Air Force
Property Number: 189520025
Status: Unutilized
Reason: Extensive deterioration, not accessible by road

Bldg. 12
Lonely Dewline Site
Fairbanks Co: Fairbanks NS AK
Landholding Agency: Air Force
Property Number: 189520026
Status: Unutilized
Reason: Extensive deterioration, not accessible by road

Bldg. 1
Wainwright Dewline Site
Fairbakns Co: Fairbanks NS AK
Landholding Agency: Air Force
Property Number: 189520027
Status: Unutilized
Reason: Extensive deterioration, not accessible by road

Bldg. 2
Wainwright Dewline Site
Fairbanks Co: Fairbanks NS AK
Landholding Agency: Air Force
Property Number: 189520028
Status: Unutilized
Reason: Extensive deterioration, not accessible by road

Bldg. 3
Wainwright Dewline Site
Fairbanks Co: Fairbanks NS AK
Landholding Agency: Air Force
Property Number: 189520029
Status: Unutilized
Reason: Extensive deterioration, not accessible by road

California

Bldg. 908
Vandenberg Air Force Base
Vandenberg AFB Co: Santa Barbara CA 93437–
Landholding Agency: Air Force
Property Number: 189520018
Status: Excess

Reason: Other
Comment: Detached latrine

Bldg. 11514
Vandenberg Air Force Base
Vandenberg AFB Co: Santa Barbara CA 93437–
Landholding Agency: Air Force
Property Number: 189520019
Status: Excess
Reason: Secured area, extensive deterioration

Bldg. 11559
Vandenberg Air Force Base
Vandenberg AFB Co: Santa Barbara CA 93437–
Landholding Agency: Air Force
Property Number: 189520020
Status: Excess
Reason: Secured area, extensive deterioration

Bldg. 13002
Vandenberg Air Force Base
Vandenberg AFB Co: Santa Barbara CA 93437–
Landholding Agency: Air Force
Property Number: 189520021
Status: Excess
Reason: Secured area, extensive deterioration

Bldg. 13004
Vandenberg Air Force Base
Vandenberg AFB Co: Santa Barbara CA 93437–
Landholding Agency: Air Force
Property Number: 189520022
Status: Excess
Reason: Secured area, extensive deterioration

Bldg. 16195
Vendenberg Air Force Base
Vendenberg AFB Co: Santa Barbara CA 93437–
Landholding Agency: Air Force
Property Number: 189520023
Status: Excess
Reason: Secured area, extensive deterioration

Dixon Residence 08–102
Oceanview Terrace
Klamath Co: Del Norte CA 95548–
Landholding Agency: Interior
Property Number: 619520027
Status: Unutilized
Reason: Extensive deterioration

Waterson Residence 08–107
Oceanview Terrace
Klamath Co: Del Norte CA 95531–
Landholding Agency: Interior
Property Number: 619520036
Status: Unutilized
Reason: Extensive deterioration

Florida

23 Family Housing
MacDill Auxiliary Airfield No. 1
Avon Park Co: Polk FL 33825–
Location: Include Bldgs; 448, 451 thru 470, 472 and 474
Landholding Agency: Air Force
Property Number: 189520006
Status: Excess
Reason: Within airport runway clear zone

Bldg. 240
MacDill Auxiliary Airfield No. 1
Avon Park Co: Polk FL 33825–
Landholding Agency: Air Force
Property Number: 189520007
Status: Excess
Reason: Extensive deterioration

Idaho

Bldg. 4403
Mountain Home Air Force Base
Mountain Home Co: Elmore ID 83647–
Landholding Agency: Air Force
Property Number: 189520008
Status: Unutilized
Reason: Extensive deterioration

Montana

Bldg. 780
Malmstrom Air Force Base
Malmstrom AFB Co: Cascade MT 59402–
Landholding Agency: Air Force
Property Number: 189520012
Status: Unutilized
Reason: Secured area

South Dakota

Bldg. 1208
Ellsworth Air Force Base
Ellsworth AFB CO; Meade SD 57706–
Landholding Agency: Air Force
Property Number: 189520009
Status: Unutilized
Reason: Secured area

Bldg. 7245
Ellsworth Air Force Base
Ellsworth AFB CO; Meade SD 57706–
Landholding Agency: Air Force
Property Number: 189520010
Status: Unutilized
Reason: Secured area, within 2000 ft. of flammable or explosive material

Bldg. 7502
Ellsworth Air Force Base
Ellsworth AFB CO; Meade SD 57706–
Landholding Agency: Air Force
Property Number: 189520011
Status: Unutilized
Reason:Secured area, within 2000 ft. of flammable or explosive material

Virginia

Chandler House 272 & 272A
220 Zweybrucken Road
Yorktown Co: York VA 23690–
Landholding Agency: Interior
Property Number: 619520028
Status: Unutilized
Reason: Extensive deterioration

Jenkins House, Bldg. JH
218 Zweybrucken Road
Yorktown Co: York VA 23690–
Landholding Agency: Interior
Property Number: 619520029
Status: Unutilized
Reason: Extensive deterioration

[FR Doc. 95–13458 Filed 6–1–95; 8:45 am]

BILLING CODE 4210–29–M

DEPARTMENT OF THE INTERIOR

Bureau of Land Management

[WY–920–05–1320–01; WYW136502]

Cheyenne, Wyoming 82003

AGENCY: Bureau of Land Management, Interior.

ACTION: Notice of invitation for coal exploration licenses.

SUMMARY: Pursuant to section 2(b) of the Mineral Leasing Act of February 25, 1920, as amended by section 4 of the Federal Coal Leasing Amendments Act of 1976, 90 Stat. 1083, 30 U.S.C. 201(b), and to the regulations adopted as Subpart 3410, Title 43, Code of Federal Regulations, all interested parties are hereby invited to participate with Bridger Coal Company on a pro rata cost sharing basis in its program for the exploration of coal deposits owned by the United State of America in the following described lands in Sweetwater County, Wyoming:

T. 40 N., R. 100 W., 6th P.M., Wyoming
Sec. 24: All.

Containing approximately 640.00 acres.

All of the coal in the above-described land consists of unleased Federal coal within the Rock Springs Known Recoverable Coal Resource Area. The purpose of the exploration program is to conduct off-lease exploration by drilling.

ADDRESSES: The proposed exploration program is fully described and will be conducted pursuant to an exploration plan to be approved by the Bureau of Land Management. Copies of the exploration plan are available for review during normal business hours in the following offices (serialized under number WYW136502): Bureau of Land Management, Wyoming State Office, 2515 Warren Avenue, P.O. Box 1828, Cheyenne, Wyoming 82003; and, Bureau of Land Management, Rock Springs District Office, Highway 191 North, Rock Springs, Wyoming 82902.

FOR FURTHER INFORMATION CONTACT:

This notice of invitation will be published in the Daily Rocket-Miner of Rock Springs, Wyoming, once each week for two consecutive weeks beginning the week of May 29, 1995, and in the **Federal Register**. Any party electing to participate in this exploration program must send written notice to both the Bureau of Land Management and Bridger Coal Company no later than thirty days after publication of this invitation in the **Federal Register**. The written notice should be sent to the following addresses: Bridger Coal Company, Attn: Don Hartley, P.O. Box 2068, Rock Springs, Wyoming 82902, and the Bureau of Land Management, Wyoming State Office, Home Base Chief, Minerals and Lands Authorization Group, P.O. Box 1828, Cheyenne, WY 82003.

The foregoing is published in the **Federal Register** pursuant to Title 43

Code of Federal Regulations, section 3410.2–1(c)(1).

Pamela J. Lewis,

Supervisory Land Law Examiner.

[FR Doc. 95–13449 Filed 6–1–95; 8:45 am]

BILLING CODE 4310–22–M

[WY–920–41–5700; WYW97141]

Notice of Proposed Reinstatement of Terminated Oil and Gas Lease; Wyoming

Pursuant to the provisions of 30 U.S.C. 188(d) and (e), and 43 CFR 3108.2–3(a) and (b)(1), a petition for reinstatement of oil and gas lease WYW97141 for lands in Fremont County, Wyoming, was timely filed and was accompanied by all the required rentals accruing from the date of termination. The lessee has agreed to the amended lease terms for rentals and royalties at rates of $5.00 per acre, or fraction thereof, per year and 16⅔ percent, respectively.

The lessees has paid the required $500 administrative fee and $125 to reimburse the Department for the cost of this **Federal Register** notice. The lessee has met all the requirements for reinstatement of the lease as set out in section 31 (d) and (e) of the Mineral Lands Leasing Act of 1920 (30 U.S.C. 188), and the Bureau of Land Management is proposing to reinstate lease WYW97141 effective January 1, 1995, subject to the original terms and conditions of the lease and the increased rental and royalty rates cited above.

Pamela J. Lewis,

Supervisory Land Law Examiner.

[FR Doc. 95–13451 Filed 6–1–95; 8:45 am]

BILLING CODE 4310–22–M

[WY–920–41–5700; WYW116467]

Notice of Proposed Reinstatement of Terminated Oil and Gas Lease; Wyoming

Pursuant to the provisions of 30 U.S.C. 188 (d) and (e), and 43 CFR 3108.2–3 (a) and (b)(1), a petition for reinstatement of oil and gas lease WYW116467 for lands in Natrona County, Wyoming, was timely filed and was accompanied by all the required rentals accruing from the date of termination. The leasee has agreed to the amended lease terms for rentals and royalties at rates of $10.00 per acre, or fraction thereof, per year and 16⅔ percent, respectively.

The lessee has paid the required $500 administrative fee and $125 to reimburse the Department for the cost of this **Federal Register** notice. The lessee has met all the requirements for reinstatement of the lease as set out in section 31 (d) and (e) of the Mineral Lands Leasing Act of 1920 (30 U.S.C. 188), and the Bureau of Land Management is proposing to reinstate lease WYW116467 effective September 1, 1994, subject to the original terms and conditions of the lease and the increased rental and royalty rates cited above.

Pamela J. Lewis,

Supervisory Land Law Examiner.

[FR Doc. 95–13452 Filed 6–1–95; 8:45 am]

BILLING CODE 4310–22–M

[NV–030–95–1610–00]

Notice of Intent To Consider Amending the Walker Resource Management Plan

AGENCY: Bureau of Land Management, Interior.

ACTION: Notice of intent to consider amending the Walker Resource Management Plan, prepare an environmental assessment and invite public participation.

SUMMARY: The Carson City District of the Bureau of Land Management is considering amending the Walker Resource Management Plan to address management of public lands in the Carson City, Nevada urban interface. The impacts of the amendment would be analyzed in an environmental assessment. The proposed amendment would be prepared jointly with Carson City as part of the City's master plan update.

DATES AND ADDRESSES: A joint public meeting will be held at 6 pm on June 20, 1995 at Carson High School, 1111 N. Saliman Rd., in Carson City. The meeting will be chaired by the Carson City Planning Commission and the Bureau of Land Management. It's purpose will be to identify issues for BLM's plan amendment and to review the goals and objectives for Carson City's master plan update. Written comments on the proposed amendment and environmental assessment are welcomed through July 14, 1995. They should be sent to Carson City Amendment Project Manager, U.S. Bureau of Land Management, 1535 Hot Springs Road, Carson City, NV 89706. Please call 702 885–6100 for further information.

Comments to the Carson City Planning Commission should be forwarded through the Carson City Community Development Department, 8621 Northgate Lane, Suite 62, Carson City, NV 80706, PH (702) 887–2180.

SUPPLEMENTARY INFORMATION: The public is invited to participate in the identification of issues related to the management of public lands in the Carson City urban interface. Preliminary issues include recreation, open space and land tenure. Planning documents and other pertinent materials may be examined at the Bureau of Land Management office in Carson City between 7:30 a.m. and 5 p.m. Monday through Friday.

Dated this 25th day of May, 1995.

John Singlaub,

District Manager, Carson City District.

[FR Doc. 95–13489 Filed 6–1–95; 8:45 am]

BILLING CODE 4310–HC–M

[UT–943–1420–00–269Z]

Filing of Plat of Survey

AGENCY: Bureau of Land Management, Interior.

ACTION: Notice.

SUMMARY: These plats of survey of the following described land have been filed in the Utah State Office, Salt Lake City, Utah:

Group	Tp.	Rge.	Meridian	Approved	Type
0732	18 S.	02 E.	SLM	11/23/94	Dep. Res.
0733	19 S.	01 E.	SLM	11/23/94	Dep. Res.
0733	19 S.	02 E.	SLM	11/23/94	Dep. Res.
0758	13 S.	01 W.	SLM	08/19/94	Dep. Res.
0758	13 S.	02 W.	SLM	08/19/94	Dep. Res.
0762	10 S.	22 E.	SLM	08/19/94	Dep. Res.
0779	14 S.	01 W.	SLM	11/23/94	Dep. Res.
0782	03 S.	03 W.	USM	11/23/94	Dep. Res.
0782	04 S.	03 W.	USM	11/23/94	Dep. Res.
0790	06 S.	20 E.	SLM	04/22/94	Dep. Res.

Group	Tp.	Rge.	Meridian	Approved	Type
0794	01 N.	12 W.	SLM	03/17/94	Dep. Res.
SUP–234	02 S.	11 W.	SLM	02/17/95	Supple.
SUP–235	09 S.	03 E.	SLM	04/06/95	Supple.
SUP–236	09 S.	19 W.	SLM	04/06/95	Supple.
SUP–237	19 S.	02 E.	SLM	04/06/95	Supple.
SUP–238	20 S.	20 W.	SLM	04/06/95	Supple.
SUP–239	42 S.	11 W.	SLM	04/06/95	Supple.
7382–A	23 S.	09 W.	SLM	07/25/94	Mineral Sur.
7382–B	23 S.	09 W.	SLM	07/25/94	Mineral Sur.
7383–A	23 S.	09 W.	SLM	07/25/94	Mineral Sur.
7383–B	23 S.	09 W.	SLM	07/25/94	Mineral Sur.
7384–A	23 S.	09 W.	SLM	07/25/94	Mineral Sur.
7384–B	23 S.	09 W.	SLM	07/25/94	Mineral Sur.

NOTICE: Suspension of plat for Township 16 South, Range 4 West, Salt Lake Meridian, Utah, under the authority of Group 614, as accepted on February 14, 1984, has been lifted by the Chief Cadastral Surveyor for Utah.

The identity plat was suspended by memorandum on February 10, 1993, due to a protest filed against the dependent resurvey conducted by Richard A. Zaninovich, Cadastral Surveyor. The action of suspension was taken as a result of the protest filed by Kendall Stewart, Las Vegas, Nevada.

Cancellation of suspension is by direction of this office, pursuant to the dismissing of protest by the Interior Board of Land Appeals (IBLA). All documents with notations pertaining to suspension must signify that: ''Cancellation of Suspension was executed in accordance with IBLA decision on March 28, 1995. Refer to Docket No. 93–409, Serial No. UT–943.''

Mat Millenbach,

State Director.

[FR Doc. 95–13448 Filed 6–1–95; 8:45 am]

BILLING CODE 4310–DQ–M

National Park Service

Intention To Extend an Existing Concession Contract—Muir Woods National Monument

SUMMARY: Pursuant to the Act of October 9, 1965 (79 Stat. 969; 16 U.S.C. 20 *et seq.*), notice is given that the National Park Service intends to extend the concession contract at Muir Woods National Monument for a period of three years. This extension is necessary to allow the continuation of public services during the completion period of the planning documents for the park. The current concessioner has performed its obligation to the satisfaction of the Secretary and therefore has a statutory preference in renewal.

SUPPLEMENTARY INFORMATION: The concession contract at Muir Woods National Monument will expire on December 31, 1995, unless extended. The National Park Service will not renew this contract for an extended period until planning can be conducted to determine the future direction for concession services at Muir Woods National Monument. The necessary planning process is expected to begin shortly and will affect the future of the concession. The planning process is expected to take two to three years to complete. Until that planning process is completed, it will not be in the best interest of Muir Woods National Monument to enter into a long term concession contract. For these reasons, it is the intention of the National Park Service to extend the current contract for a period of three years beginning January 1, 1996. Benefits accruing to the government under this contract were renegotiated in 1994.

Information about this notice can be sought from: Business Manager, Golden Gate National Recreation Area, Attention: Robert Kates, Building 201, Fort Mason, San Francisco, California 94123, or call: (415) 556–3104.

Dated: May 25, 1995.

Patty Neubacher,

Acting Regional Director, Western Region.

[FR Doc. 95–13546 Filed 6–1–95; 8:45 am]

BILLING CODE 4310–70–M

Notice of Intent To Issue a Prospectus for the Operation and Management of a Medical Clinic

SUMMARY: Medical operations at the Yosemite Medical Clinic have been conducted by Samaritan Health Services of Phoenix, Arizona. Due to management decisions by Samaritan, they intend to cease such operations in the Fall of 1995. The National Park Service will shortly issue a Prospectus seeking a new concessioner to operate and manage the Yosemite Medical Clinic in Yosemite National Park, California.

SUPPLEMENTARY INFORMATION: Medical services for visitors to Yosemite and for the resident population of government and concessioner employees are provided at the Yosemite Medical Clinic. The Clinic also supports the emergency medical requirements related to park emergency and rescue operations. The current business grosses roughly $1.5 million per year. The clinic operates from a government owned building. Some housing is also provided by the government. These facilities are provided for a fee. Samaritan will sell certain personal property (supplies and equipment) to the incoming operator. Other equipment and supplies are to be provided by the new operator. All of the requirements as well as needed improvements to the facilities, are described in the Prospectus. The new contract will be for a term of between 5 and 15 years depending on the degree of facility improvements agreed to and other factors described in the Prospectus.

If you are interested in this business opportunity and wish to receive a copy of the Prospectus and the Application when they are issued, please send your name and address to: National Park Service, Concession Program Management Division, 600 Harrison Street, Suite 600, San Francisco, CA 94107–1372, or call: (415) 744–3981—Teresa Jackson; when the Prospectus is issued, applications will be accepted for SIXTY (60) days under the terms described in the Prospectus.

Dated: May 19, 1995.

Bruce Kilgore,

Acting Regional Director, Western Region.

[FR Doc. 95–13545 Filed 6–1–95; 8:45 am]

BILLING CODE 4310–70–M

Chesapeake and Ohio Canal National Historical Park Commission Meeting

Notice is hereby given in accordance with Federal Advisory Committee Act that a meeting will be held at 1:00 p.m.,

Saturday, June 10, 1995, at Allegany Community College, Willowbrook Road, Cumberland, Maryland.

The Commission was established by Public Law 91–664 to meet and consult with the Secretary of the Interior on general policies and specific matters related to the administration and development of the Chesapeake and Ohio Canal National Historical Park.

The members of the Commission are as follows:

Mrs. Sheila Rabb Weidenfeld, Chairman, Washington, D.C.
Ms. Diane C. Ellis, Brunswick, Maryland
Brother James T. Kirkpatrick, F.S.C., Cumberland, Maryland
Ms. Anne L. Gormer, Cumberland, Maryland
Ms. Elise B. Heinz, Arlington, Virginia
Mr. George M. Wykoff, Jr., Cumberland, Maryland
Mr. Rockwood H. Foster, Washington, D.C.
Mr. Barry A. Passett, Washington, D.C.
Mrs. Jo Reynolds, Potomac, Maryland
Ms. Nancy C. Long, Glen Echo, Maryland
Ms. Mary E. Woodward, Shepherdstown, West Virginia
Dr. James H. Gilford, Frederick, Maryland
Mr. Edward K. Miller, Hagerstown, Maryland
Mrs. Sue Ann Sullivan, Williamsport, Maryland
Mr. Terry W. Hepburn, Hancock, Maryland
Mr. Laidley E. McCoy, Charleston, West Virginia
Ms. Jo Ann M. Spevacek, Burke, Virginia
Mr. Charles J. Weir, Falls Church, Virginia

The primary agenda for this meeting will include a report and update on the Canal Place Authority project in Cumberland.

The meeting will be open to the public. Any member of the public may file with the Commission a written statement concerning the matters to be discussed. Persons wishing further information concerning this meeting or who wish to submit written statements, may contact the Superintendent, C&O Canal National Historical Park, P.O. Box 4, Sharpsburg, Maryland 21782.

Minutes of the meeting will be available for public inspection six (6) weeks after the meeting at park headquarters, Sharpsburg, Maryland.

Dated: May 25, 1995.

Terry R. Carlstrom,

Acting Regional Director, National Capital Region.

[FR Doc. 95–13544 Filed 6–1–95; 8:45 am]

BILLING CODE 4310–70–M

Notice of Public Hearing

SUMMARY: Proposed Exchange of Federally-Owned Lands for Privately-Owned Lands Both in Fulton County, Georgia.

FOR FURTHER INFORMATION CONTACT: Superintendent, Martin Luther King, Jr. National Historic Site, 526 Auburn Avenue, Atlanta, Georgia 30312.

A public hearing has been scheduled to hear and receive public comments on the proposed exchange. A Notice of Realty Action, published in the **Federal Register** on May 5, 1995, describes the proposed action which involves an equal value exchange of property between Ebenezer Baptist Church and the National Park Service.

The public hearing will be held at 6:30 p.m. on Thursday, June 15, 1995, at the Auburn Avenue Research Library of African American Culture and History, 145 Auburn Avenue, Atlanta, Georgia.

Comments will be accepted during a 45-day public comment period which ends June 19, 1995.

Dated: May 24, 1995.

Robert Deskins,

Southeast Field Director.

[FR Doc. 95–13543 Filed 6–1–95; 8:45 am]

BILLING CODE 4310–70–M

INTERNATIONAL TRADE COMMISSION

[Investigation No. 731–TA–706 (Final)]

In the Matter of Canned Pineapple Fruit From Thailand; Commission Determination to Conduct a Portion of the Hearing in Camera

AGENCY: U.S. International Trade Commission.

ACTION: Closure of a portion of a Commission hearing to the public.

SUMMARY: Upon requests of petitioner Maui Pineapple Company, Ltd. (''Maui'') and respondents Thai Food Processors' Association (''TFPA'') and the Government of Thailand in the above-captioned final investigation, the Commission has unanimously determined to conduct a portion of its hearing scheduled for June 1, 1995, *in camera.* See Commission rules 207.23(d), 201.13(m) and 201.35(b)(3) (19 C.F.R. 207.23(d), 201.13(m) and 201.35(b)(3), as amended, 59 Fed. Reg. 66,719 (Dec. 28, 1994)). The remainder of the hearing will be open to the public.

FOR FURTHER INFORMATION CONTACT: Rachele R. Valente, Esq., Office of the General Counsel, U.S. International Trade Commission, 500 E Street, S.W., Washington, D.C. 20436, telephone 202–205–3089. Hearing-impaired individuals are advised that information on this matter may be obtained by contacting the Commission's TDD terminal on 202–205–1810.

SUPPLEMENTARY INFORMATION: The Commission believes that the parties have justified the need for a closed session. Because Maui is virtually the sole domestic producer, a full discussion of its financial condition and of many of the indicators that the Commission examines in assessing material injury, or threat thereof, by reason of subject imports can only occur if at least part of the hearing is held *in camera.* In making this decision, the Commission nevertheless reaffirms its belief that whenever possible its business should be conducted in public.

The hearing will include the usual public presentations by petitioner and by respondents, with questions from the Commission. In addition, the hearing will include an *in camera* session for presentations including BPI by petitioner and respondents, and for questions from the Commission relating to the BPI. For any *in camera* session the room will be cleared of all persons except (1) those who have been granted access to BPI under a Commission administrative protective order (''APO'') and are included on the Commission's APO service list in these investigations (see 19 C.F.R. 201.35(b)(1), (2)); (2) non-APO authorized Maui personnel when Maui's BPI will be discussed; and (3) non-APO authorized foreign producer personnel when such producer's BPI will be discussed. See 19 C.F.R. 201.35(b)(1), (2). The time for the parties' presentations and rebuttals in the *in camera* session will be taken from their respective overall allotments for the hearing. All persons planning to attend the *in camera* portions of the hearing should be prepared to present proper identification.

Authority: The General Counsel has certified, pursuant to Commission Rule 201.39 (19 C.F.R. 201.39) that, in her opinion, a portion of the Commission's hearing in *Canned Pineapple Fruit Thailand,* Inv. No. 731–TA–706 (Final) may be closed to the public to prevent the disclosure of BPI.

By order of the Commission.

Issued: May 26, 1995.

Donna R. Koehnke,

Secretary.

[FR Doc. 95–13542 Filed 6–1–95; 8:45 am]

BILLING CODE 7020–02–P

DEPARTMENT OF JUSTICE

Drug Enforcement Administration

[Docket No. 93–65]

Harlan J. Borcherding, D.O.; Revocation of Registration

On June 17, 1993, the Deputy Assistant Administrator (then-Director), Office of Diversion Control, Drug Enforcement Administration (DEA), issued an Order to Show Cause to Harlan J. Borcherding, D.O., of Houston, Texas (Respondent), proposing to revoke his DEA Certificate of Registration, AB1540079, and deny any pending applications for such registration. The statutory basis for the Order the Show Cause was that Respondent's continued registration would be inconsistent with the public interest as that term is used in 21 U.S.C. 823(f) and 824(a)(4).

Respondent, through counsel, requested a hearing on the issues raised in the Order to Show Cause, and the matter was docketed before Administrative Law Judge Paul A. Tenney. Following prehearing procedures, a hearing was held in Houston, Texas, on May 25, 1994.

On October 11, 1994, Judge Tenney issued his findings of fact, conclusions of law and recommended ruling. The Government filed exceptions to Judge Tenney's recommended ruling on October 28, 1994. No exceptions were filed by Respondent.

On November 11, 1994, the administrative law judge transmitted the record, including the Government's exceptions, to the Deputy Administrator. The Deputy Administrator has considered the record in its entirety and enters his final order in this matter pursuant to 21 CFR 1316.67, based on findings of fact and conclusions of law as set forth herein.

The administrative law judge found that Respondent is a primary-care family physician. Respondent's medical practice is situated in a low-income area and his clientele primarily are economically deprived individuals.

The administrative law judge further found that DEA initiated an investigation of Respondent, in March of 1990, following information received from the Texas Department of Human Services that Respondent was among the top 1,000 Medicaid prescribers. DEA also received information from the Houston Police Department that Respondent was writing numerous prescriptions for Tylenol #4, a Schedule III controlled substance, and Valium, a Schedule IV controlled substance.

The administrative law judge found that an undercover Houston police officer participated in DEA's investigation of Respondent for the purpose of obtaining prescriptions for Tylenol #4 and Valium from Respondent for non-medical reasons. The undercover officer, wired with a transmitter, visited Respondent's office on ten occasions between October 1990 and March 1991. The undercover officer completed a patient information sheet during his first meeting with Respondent on March 21, 1990, and indicated that he was unemployed. Respondent recorded the officer's blood pressure, temperature and weight, and drew a blood sample. The officer informed Respondent that he ''needed something to mellow out at the end of the day'', and specifically asked for Valium. Judge Tenney noted that Respondent explained to the officer that he did not give Valium to new patients and that he would only give it to regular patients. Respondent also asked if the lack of a job was the reason the officer complained of stress and, therefore, had requested the medication. Respondent dispensed to the officer 18 Tranxene 7.5 mg tablets, a Schedule IV controlled substance.

The administrative law judge found that the officer made his second visit the Respondent's office on April 24, 1990, and received a prescription for 30 Tranxene 7.5 mg tablets, plus one refill. Judge Tenney also noted that after giving the officer the prescription, Respondent asked him if he needed a note for work.

The administrative law judge further found that, on June 8, 1990, at his third visit, the officer informed Respondent that he had been taking two Tranxene tablets at a time. The officer received a prescription of 30 Valium 10 mg tablets, with one refill.

Judge Tenney found that, on the officer's next visit in July 1990, the officer informed Respondent that he now was taking two Valium per day and asked for a prescription for Tylenol #4. Respondent refused to prescribe Tylenol #4 stating that Tylenol #4 is only needed for pain and that the combination of Valium and Tylenol #4 is potent. Respondent also informed that officer that he could continue to take two Valium per day, but that one per day was preferable. The officer obtained a prescription for 30 Valium 10 mg tablets, plus one refill. Respondent again asked the officer if he needed a note for work.

The administrative law judge further found that during the officer's next visit in September of 1990, the officer informed Respondent that he had a new job. The officer also asked for a prescription of Tylenol #4, stating that he had run out of Valium and had taken Tylenol #4 in its place. Respondent refused the request for Tylenol #4 and, instead, again prescribed 30 Valium 10 mg tablets, plus one refill.

The administrative law judge found that the officer made another visit to Respondent on December 14, 1990, and was refused his requested refill of Valium because, as Respondent stated, narcotics agents were monitoring Respondent's prescriptions, particularly those for street drugs. However, respondent did give the officer a prescription for 30 Tranxene 7.5 mg tablets, plus one refill.

The officer again visited Respondent on January 25, 1991, and informed Respondent that he had obtained Tylenol #4 from another physician. The administrative law judge found that the officer did not complain of any illness during this visit nor give any reason why he might need a prescription for Tylenol #4. Respondent prescribed 30 Tranxene 15 mg tablets, plus one refill.

Judge Tenney found that the officer returned to Respondent on February 26, 1991. Respondent informed the officer that he should not have returned until two months after his previous January 25, 1991 visit. The officer responded that he had been giving some of his medication to his girlfriend and asked whether she could see Respondent. The officer additionally informed Respondent that the Tranxene was not working as well as the Valium. Respondent prescribed 60 Tranxene 15 mg tablets, plus one refill.

Judge Tenney found that, on March 20, 1991, at the final visit, the officer brought another undercover police officer to Respondent's office to pose as his girlfriend. The second officer requested a prescription because she ''just needed something to relax.'' Respondent refused to prescribe medication to either officer at this visit.

With regard to the officer's visits to Respondent, Judge Tenney noted that Respondent spent, on average, only three minutes with the officer on most of these visits, and that two visits lasted only one minute each. During these visits Respondent did not pursue the nature of the officer's complaints beyond checking the officer's blood pressure and, on two occasions, checking his chest with a stethoscope. Judge Tenney additionally noted that Respondent never advised the officer to call him or make arrangements for follow-up appointments.

Nonetheless, the administrative law judge concurred with Respondent's expert witness that the undercover

officer presented a legitimate medical complaint to Respondent, i.e. anxiety purportedly induced by unemployment. Judge Tenney further found that Respondent's treatment of the officer with Tranxene and Valium was medically proper.

In January of 1992, a grand jury in Harris County, Texas indicted Respondent on three counts of prescribing Clorazepate (also known by its brand name ''Tranxene''), a Schedule IV controlled substance, without a valid medical purpose. The indictment was based on Respondent's prescriptions of Tranxene to the undercover officer on December 14, 1990, January 25, 1991, and February 26, 1991.

The administrative law judge found that Respondent pled guilty to a single misdemeanor count and that adjudication of guilt was deferred. Respondent was given two years probation, a $2,000 fine and 200 hours of community service. Respondent's probationary period expired without an adjudication of guilt and the proceedings were dismissed.

Judge Tenney also found that DEA conducted an accountability audit covering the period between January 1, 1992 and February 19, 1993. The audit revealed shortages and overages of various controlled substances. The audit revealed recordkeeping violations, including failure to maintain complete and accurate records of controlled substances received and dispensed; failure to take an initial or biennial inventory of all stocks of controlled substances; and failure to maintain dispensing records of controlled substances in a readily retrievable form. The administrative law judge noted Respondent's admission concerning recordkeeping deficiencies, and additionally noted Respondent's testimony that he had instituted new office procedures to remedy his recordkeeping problems.

The administrative law judge found that the United States Attorney for the Southern District of Texas prepared a complaint seeking civil penalties for violations of 21 U.S.C. 827(a)(3) based on ''virtually identical'' recordkeeping deficiencies as those asserted in this proceeding. Respondent entered into a settlement agreement dated October 28, 1993. Judge Tenney found that no representation was made, through the course of the settlement, that DEA would surrender its claims concerning Respondent's DEA Certificate of Registration.

Pursuant to 21 U.S.C. 824(a)(4) the Deputy Administrator of the DEA may revoke the registration of a practitioner upon a finding that the registrant has committed such acts as would render his registration inconsistent with the public interest as that term is used in 21 U.S.C. 823(f). In determining the public interest, the following factors will be considered:

''(1) The recommendation of the appropriate State licensing board or professional disciplinary authority.

(2) The [registrant]'s experience in dispensing, or conducting research with respect to controlled substances.

(3) The [registrant]'s conviction record under Federal or State laws relating to the manufacture, distribution or dispensing of controlled substances.

(4) Compliance with applicable State, Federal, or local laws relating to controlled substances.

(5) Such other conduct which may threaten the public health and safety.''

It is well established that these factors are to be considered in the disjunctive, i.e. the Deputy Administrator may properly rely on any one or a combination of factors, and give each factor the weight he deems appropriate in assessing the public interest. See Mukand Lal Arora, M.D., 60 FR 4447 (1995); Henry J. Schwartz, Jr., M.D., 54 FR 16422 (1989).

The Government argued that factors (2) through (5) are relevant in the instant case. The administrative law judge found that the Government had established a *prima facie* case only with respect to factors (3) and (5). Judge Tenney held, with respect to factors (2) and (4), that the Government had not proven by a preponderance of the evidence that Respondent lacked a legitimate medical purpose for dispensing and prescribing controlled substances to the undercover officer.

The administrative law judge did find, however, that this is a ''close case'', because of such facts as Respondent's average three minute office visits, and Respondent's concern that narcotics agents were monitoring his prescriptions for street drugs. Judge Tenney additionally noted the fact that Respondent, on two occasions, asked the officer if he needed a note for work, raising the question as to whether Respondent actually was treating the officer for anxiety allegedly inducted by unemployment.

With regard to factor (3), the administrative law judge rejected Respondent's argument that he had not been ''convicted'' of any offense within the meaning of 21 U.S.C. 823(f)(3). The law is well settled that a DEA registrant may be found to have been ''convicted'' within the meaning of the Controlled Substances Act, despite a deferred adjudication of guilt. See Mukand Lal Arora, M.D., 60 FR 4447 (1995) (conviction, sentence of probation and deferred adjudication may be considered under 21 U.S.C. 823(f)(3)); also, Clinton D. Nutt, D.O., 55 FR 30992 (1990), *aff'd* 916 F.2d 202 (5th Cir. 1990); Eric A. Baum, M.D., 53 FR 47272 (1988).

With respect to factor (5) the administrative law judge found that the Government presented credible, uncontradicted testimony concerning Respondent's recordkeeping deficiencies and that Respondent had conceded that his recordkeeping practices were inadequate. The administrative law judge also briefly addressed and rejected Respondent's contentions that revocation of his registration, based on these recordkeeping deficiencies, is precluded by double jeopardy and collateral estoppel following Respondent's payment of a civil fine for recordkeeping violations as part of his settlement with the United States Attorney's office for the Southern District of Texas. Judge Tenney found that the settlement agreement does not preclude DEA from revoking or suspending Respondent's registration based on deficient recordkeeping practices.

Notwithstanding his conclusion that the Government had met its burden of proof with respect to 21 U.S.C. 823(f) (3) and (5), the administrative law judge recommended that Respondent retain his DEA Certificate of Registration, but should receive a formal reprimand.

The Government took exception to Judge Tenney's findings that Respondent legitimately dispensed and prescribed controlled substances to an undercover officer from March 21, 1990 to February 26, 1991. The Government argued that Respondent's guilty plea to the criminal misdemeanor fraud count constitutes an admission that Respondent did not legitimately prescribe controlled substances to the undercover officer.

The Government further objected to the administrative law judge's failure to accord more weight to evidence introduced concerning inconsistencies in the Respondent's treatment of the undercover officer in determining whether Respondent prescribed controlled substances to the undercover officer for a legitimate medical purpose. Additionally, the Government took exception to Judge Tenney's conclusion that there was little evidence of Respondent's current non-compliance with recordkeeping requirements. The Government argued that Judge Tenney's conclusion was based, in part, on the failure of DEA personnel to return to Respondent's office to verify his

compliance following the February 1993 accountability audit in which the deficiencies were discovered. The Government further argued that it's evidentiary burden was satisfied upon establishing, as found by Judge Tenney, a *prima facie* case with respect to Respondent's deficient recordkeeping systems in the past. The Government argued that it does not have the additional burden of conducting ongoing investigations up until the date of the administrative hearing to verify continued non-compliance or recent compliance. The Government further maintained that Respondent provided no evidence of his current compliance, and, further that the Government does not have the burden of establishing whether Respondent corrected his recordkeeping systems.

The Deputy Administrator rejects the opinion and recommended decision of the administrative law judge in its entirety. The Deputy Administrator concludes that, for a controlled substance prescription to be valid, it must be written by an authorized individual acting within the scope of normal professional practice for a legitimate medical purpose. Under these parameters, the prescriptions issued to the undercover officer by Respondent were not valid prescriptions because Respondent, while authorized by law to prescribe controlled substances, did not act within the scope of normal, professional practice concerning his prescriptions of Tranxene and Valium to the undercover officer. Respondent's total treatment time averaged only three minutes per visit with two visits lasting only one minute each. The undercover officer received controlled substances at seven out of ten visits over a one year period, but Respondent never advised the officer to telephone his office or schedule an appointment for follow-up. Respondent determined that since the undercover officer did not have a job and was partially ''uptight'', a prescription for Tranxene was warranted, but subsequently asked if the officer needed a note for work. Respondent continued to prescribe controlled substances to the undercover officer after the officer informed Respondent that he was taking the medication in larger quantities and more frequently than directed and was sharing the drugs with another person. Further, the officer dictated which controlled substance he wanted, rather than Respondent, as a practitioner, determining the medication appropriate for the medical condition presented by the officer.

The Deputy Administrator further finds that the prescriptions issued by Respondent were not for a legitimate medical purpose as demonstrated by Respondent's non-medical rationale for not prescribing requested drugs. For example, Respondent initially refused the officer's request for Valium, not because the undercover officer did not present a legitimate medical problem to Respondent, but, as Respondent explained, as a rule he did not give Valium to new patients, only regular patients, as if regular patients had a more legitimate medical need for controlled substances. Additionally, after prescribing Valium to the officer on three separate visits, Respondent later refused to issue a prescription for Valium out of concern that narcotic agents were monitoring his prescriptions for street drugs, but, instead, gave the officer a prescription for Tranxene.

The Deputy Administrator concludes, in light of the foregoing, that Respondent did not legitimately dispense or prescribe controlled substances to the undercover officer. The Government has met its burden of proof in this regard and factors (2) and (4) under 21 U.S.C. 823(f) are, therefore, relevant. Further, the Deputy Administrator concurs with the administrative law judge's finding that the Government established a *prima facie* case with respect to factor (3) and factor (5) under 21 U.S.C. 823(f). Finally, the Deputy Administrator concludes that Respondent's guilty plea, and his past recordkeeping violations demonstrate a pattern of noncompliance by Respondent with the Controlled Substance Act and its implementing regulations. Therefore, in consideration of 21 U.S.C. 823(f) (2), (3), (4) and (5), Respondent's continued registration would not be consistent with the public interest.

Accordingly, the Deputy Administrator of the Drug Enforcement Administration, pursuant to the authority vested in him by 21 U.S.C. 823 and 824 and 28 CFR 0.100(b) and 0.104, hereby orders that DEA Certificate of Registration, AB1540079, previously issued to Harlan J. Borcherding, D.O., be, and it hereby is, revoked, and any pending applications for such registration be, and they hereby are, denied. This order is effective July 3, 1995.

Dated: May 25, 1995.

Stephen H. Greene,

Deputy Administrator.

[FR Doc. 95–13455 Filed 6–1–95; 8:45 am]

BILLING CODE 4410–09–M

DEPARTMENT OF LABOR

Employment and Training Administration

Investigations Regarding Certifications of Eligibility To Apply for Worker Adjustment Assistance

Petitions have been filed with the Secretary of Labor under Section 221 (a) of the Trade Act of 1974 (''the Act'') and are identified in the Appendix to this notice. Upon receipt of these petitions, the Director of the Office of Trade Adjustment Assistance, Employment and Training Administration, has instituted investigations pursuant to Section 221 (a) of the Act.

The purpose of each of the investigations is to determine whether the workers are eligible to apply for adjustment assistance under Title II, Chapter 2, of the Act. The investigations will further relate, as appropriate, to the determination of the date on which total or partial separations began or threatened to begin and the subdivision of the firm involved.

The petitioners or any other persons showing a substantial interest in the subject matter of the investigations may request a public hearing, provided such request is filed in writing with the Director, Office of Trade Adjustment Assistance, at the address shown below, not later than June 12, 1995.

Interested persons are invited to submit written comments regarding the subject matter of the investigations to the Director, Office of Trade Adjustment Assistance, at the address shown below, not later than June 12, 1995.

The petitions filed in this case are available for inspection at the Office of the Director, Office of Trade Adjustment Assistance, Employment and Training Administration, U.S. Department of Labor, 200 Constitution Avenue, NW., Washington, DC 20210.

Signed at Washington, DC. this 22nd day of May, 1995.

Victor J. Trunzo,

Program Manager, Policy & Reemployment Services, Office of Trade Adjustment Assistance.

APPENDIX

Petitioner (union/workers/firm)	Location	Date received	Date of petition	Petition No.	Articles produced
Baras Jersey Inc. (Wkrs)	New York, NY	05/22/95	03/27/95	31,038	Knitted Fabrics.
Lockley Mfg. Group (USWA)	New Castle, PA	05/22/95	05/02/95	31,039	Fabrication of Weapons Systems.
Mobile Tech Inc. (Wkrs)	Abingdon, VA	05/22/95	05/09/95	31,040	Automotive Remote Starters.
Overton Shirt Makers (Wkrs)	Livingston, TN	05/22/95	05/01/95	31,041	Men's Shirts, Boxers, P.J. & Robes.
Tubescope Vetco International (Wkrs).	Girard, OH	05/22/95	05/07/95	31,042	Oilfield Pipe Inspection Service.
Zenith Distributing Corp. of NY (Wkrs).	Uniondale, NY	05/22/95	05/10/95	31,043	Consumer Electronics.
Engraph Label Group (Wkrs)	Delran, NJ	05/22/95	05/04/95	31,044	Sale & Serv. Label Application Machinery.
Engraph Label Group (Wkrs)	Moorestown, NJ	05/22/95	05/04/95	31,045	Sale & Serv. Label Application Machinery.
Ingersoll-Dresser Pump Co (USWA)	Phillipsburg, NJ	05/22/95	05/08/95	31,046	Petro-Chemical & Utility Pumps.
(The) Travelers Insurance Co (Wkrs)	Voorhees, NJ	05/22/95	05/01/95	31,047	Process Medical Insurance Claims.
OXY USA, Inc (Wkrs)	Tulsa, OK	05/22/95	05/12/95	31,048	Oil and Gas.
OXY USA, Inc (Wkrs)	Oklahoma City, OK.	05/22/95	05/12/95	31,049	Oil and Gas.
OXY USA, Inc (Wkrs)	Liberal, KS	05/22/95	05/12/95	31,050	Oil and Gas.
OXY USA, Inc (Wkrs)	Wichita, KS	05/22/95	05/12/95	31,051	Oil and Gas.
OXY USA, Inc (Wkrs)	Houston, TX	05/22/95	05/12/95	31,052	Oil and Gas.
OXY USA, Inc (Wkrs)	Midland, TX	05/22/95	05/12/95	31,053	Oil and Gas.
OXY USA, Inc (Wkrs)	Hobbs, NM	05/22/95	05/12/95	31,054	Oil and Gas.
OXY USA, Inc (Wkrs)	Bakersfield, CA	05/22/95	05/12/95	31,055	Oil and Gas.
Philips Laser Magnetic Storage (Wkrs).	Colorado Springs, CO.	05/22/95	05/08/95	31,056	CD–ROM/Compact Disc Drives.
F & M Hat Co (Wkrs)	Denver, PA	05/22/95	05/01/95	31,057	Women's Wool Felt Hats.
H & P Garment (ILGWU)	Hoboken, NJ	05/22/95	04/26/95	31,058	Women's Coats.
King Design, Inc. (Wkrs)	Eugene, OR	05/22/95	05/04/95	31,059	Interior Graphic Design Products.
Norcross Footwear Inc. (Co.)	Nashua, NH	05/22/95	05/10/95	31,060	Waders & Children's Snow Boots.
Strand Lighting, Inc. (Wkrs)	Rancho Dominguez, CA.	05/22/95	05/12/95	31,061	Lighting Fixtures & PCB Assemblies.

[FR Doc. 95–13526 Filed 6–1–95; 8:45 am]
BILLING CODE 4510–30–M

[TA–W–30,570]

Certification Regarding Eligibility to Apply for Worker Adjustment Assistance

In the matter of Chevron USA Production Company Headquartered in Houston, Texas and Chevron USA Production Company operating at various locations in the following States: Alabama TA–W–30,570A; California TA–W–30,570B; Colorado TA–W–30,570C; District of Columbia TA–W–30,570D; Kansas TA–W–30,570E; Louisiana TA–W–30,570F; Mississippi TA–W–30,570G; New Mexico TA–W–30,570H; North Dakota TA–W–30,570I; Oklahoma TA–W–30,570J; Texas TA–W–30,570K; Utah TA–W–30,570L; Wyoming TA–W–30,570M.

In accordance with Section 223 of the Trade Act of 1974 (19 USC 2273) as amended by the Omnibus Trade and Competitiveness Act of 1988 (Pub. L. 100–418) the Department of Labor herein presents the results of an investigation regarding certification of eligibility to apply for worker adjustment assistance.

In order to make an affirmative determination and issue a certification of eligibility to apply for adjustment assistance, each of the group eligibility requirements of Section 222 of the Act must be met. It is determined in this case that all of the requirements have been met.

The investigation was initiated on December 19, 1994 in response to a petition filed on behalf of workers and former workers at Chevron USA Production Company, headquartered in Houston, Texas (TA–W–30,570) and all operations in the following states: (1) Alabama (TA–W–30,570A); and (2) California (TA–W–30,570B); (3) Colorado (TA–W–30,570C); (4) District of Columbia (TA–W–30,570D); (5) Kansas (TA–W–30,570E); (6) Louisiana (TA–W–30,570F); (7) Mississippi (TA–W–30,570G); (8) New Mexico (TA–W–30,570H); (9) North Dakota (TA–W–30,570I); (10) Oklahoma (TA–W–30,570J); (11) Texas (TA–W–30,570K); (12) Utah (TA–W–30,570L); and (13) Wyoming (TA–W–30,570M). Workers are engaged in the exploration and production of crude oil and natural gas.

Workers are not separately identifiable between crude oil and natural gas exploration or production. Crude oil accounts for an important portion of Chevron USA Production Company's sales.

Workers at Chevron USA Production Company located in various locations in various states: Texas; New Mexico; Colorado; Utah; Wyoming; California; Louisiana; Mississippi; Oklahoma; Alabama; Kansas; and North Dakota (TA–W–27,627; TA–W–27,308; TA–W–27,310–27,313; and TA–W–27,316–318) were certified eligible to apply for trade adjustment assistance benefits on July 9, 1992. These certifications expired on July 9, 1994.

United States imports of crude oil and dry natural gas increased absolutely and relative to domestic shipments and consumption in the period November 1993 through October 1994 as compared to the year earlier.

Sales and production of crude oil at Chevron USA Production Company declined in 1994 compared to 1993.

Overall employment of workers at Chevron USA Production Company, headquartered in Houston, Texas (TA–W–30,570) and in various locations in various states of Chevron USA Production (TA–W–30,570A–M) declined in 1994 compared to 1993.

There have been major layoffs at the headquarters (TA–W–30,570) and at various locations in various states (TA–W–30,570A–M) of Chevron USA Production Company in 1993 and 1994. There are additional layoffs planned for 1995; 1996; and beyond at Chevron USA Production Company.

Company imports of crude oil and natural gas increased in 1994 compared to 1993.

Conclusion

After careful review of the facts obtained in the investigation, I conclude

that increases of imports of articles like or directly competitive with crude oil and natural gas contributed importantly to the decline in sales or production and to the total or partial separation of workers at Chevron USA Production Company. In accordance with the provisions of the Act, I make the following certification:

''All workers of Chevron USA Production Company, located in the District of Columbia (TA–W–30,570D) who become totally or partially separated from employment on or after December 19, 1993 are eligible to apply for adjustment assistance under Section 223 of the Trade Act of 1974.''

AND

''All workers of Chevron USA Production Company operating at various locations in the following states engaged in employment related to the exploration and production of crude oil and natural gas who became totally or partially separated from employment on or after July 9, 1994 are eligible to apply for adjustment assistance under Section 223 of the Trade Act of 1974.''

Alabama TA–W–30,570A
California TA–W–30,570B
Colorado TA–W–30,570C
Kansas TA–W–30,570E
Louisiana TA–W–30,570F
Mississippi TA–W–30,570G
New Mexico TA–W–30,570H
North Dakota TA–W–30,570I
Oklahoma TA–W–30,570J
Texas TA–W–30,570K
Utah TA–W–30,570L
Wyoming TA–W–30,570M

Signed in Washington, DC this 23rd day of May 1995.

Victor J. Trunzo,

Program Manager, Policy and Reemployment Services, Office of Trade Adjustment Assistance.

[FR Doc. 95–13525 Filed 6–1–95; 8:45 am]

BILLING CODE 4510–30–M

[TA–W–29, 403]

Johnson Controls Inc., Bennington, Vermont; Revised Determination on Reopening

On May 12, 1995, the Department, on its own motion, reopened its investigation for the former workers of the subject firm.

The initial investigation resulted in a negative determination on March 15, 1994 because the ''contributed importantly'' test of the Group Eligibility Requirements of the Trade Act was not met for workers at the subject firm. The denial notice was published in the **Federal Register** on March 30, 1994 (59 FR 14876).

The new findings show a later response indicating that a customer of the subject firm increased purchases of imported automotive batteries in 1993 and 1994.

Conclusion

After careful consideration of the new facts obtained on reopening, it is concluded that increased imports of articles like or directly competitive with automotive batteries produced by the subject firm contributed importantly to the declines in sales and to the total or partial separation of workers of the subject firm. In accordance with the provisions of the Trade Act of 1974, I make the following revised determination:

''All workers of Johnson Controls Inc., Bennington, Vermont, engaged in the production of automotive batteries who became totally or partially separated from employment on or after January 3, 1993, are eligible to apply for adjustment assistance under Section 223 of the Trade Act of 1974.''

Signed in Washington, DC, this 18th day of May 1995.

Victor J. Trunzo,

Program Manager, Policy and Reemployment Services, Office of Trade Adjustment Assistance.

[FR Doc. 95–13527 Filed 6–1–95; 8:45 am]

BILLING CODE 4510–30–M

[TA–W–30, 659]

Johnson Controls Battery Group Inc., Owosso, Michigan; Revised Determination on Reopening

On May 12, 1995, the Department on its own motion, reopened its investigation for the former workers of the subject firm.

The initial investigation resulted in a negative determination on February 21, 1995 because the ''contributed importantly'' test of the Group Eligibility Requirements of the Trade Act was not met for workers at the subject firm. The denial notice was published in the **Federal Register** on March 10, 1995 (60 FR 13177).

The new findings show a late response indicating that a customer of the subject firm increased purchases of imported automotive batteries in 1993 and 1994.

Conclusion

After careful consideration of the new facts obtained on reopening, it is concluded that increased imports of articles like or directly competitive with automotive batteries produced by the subject firm contributed importantly to the declines in sales and to the total or partial separation of workers of the subject firm. In accordance with the provisions of the Trade Act of 1974, I make the following revised determination:

''All workers of Johnson Controls Battery Group, Inc., Owosso, Michigan, who became totally or partially separated from employment on or after December 22, 1993, are eligible to apply for adjustment assistance under Section 223 of the Trade Act of 1974.''

Signed in Washington, DC, this 17th day of May 1995.

Victor J. Trunzo,

Program Manager, Policy and Reemployment Services, Office of Trade Adjustment Assistance.

[FR Doc. 95–13529 Filed 6–1–95; 8:45 am]

BILLING CODE 4510–30–M

[TA–W–30,485]

Lockheed Fort Worth Co., a Division of Lockheed Corp., Department 73, Fort Worth, Texas; Revised Determination on Reopening

On May 16, 1995, the Department, on its own motion, reopened its investigation for the former workers of the subject firm.

The initial investigation resulted in a negative determination on January 10, 1995 because the ''contributed importantly'' test of the Group Eligibility Requirements of the Trade Act was not met for workers at the subject firm. The denial notice was published in the **Federal Register** on February 10, 1995 (60 FR 8061).

New evidence furnished to the Department show company imports of wire harnesses for F–16 fighter aircraft.

Conclusion

After careful consideration of the new facts obtained on reopening, it is concluded that increased imports of articles like or directly competitive with wire harnesses produced by the subject firm contributed importantly to the declines in sales and to the total or partial separation of workers of the subject firm. In accordance with the provisions of the Trade Act of 1974, I make the following revised determination:

''All workers of Department 73 of Lockheed Fort Worth Company, a Division of Lockheed Corporation, located in Fort Worth, Texas, who became totally or partially separated from employment on or after October 31, 1993, are eligible to apply for adjustment assistance under Section 223 of the Trade Act of 1974.''

Signed in Washington, DC, this 17th day of May 1995.

Victor J. Trunzo,

Program Manager, Policy and Reemployment Services, Office of Trade Adjustment Assistance.

[FR Doc. 95–13528 Filed 6–1–95; 8:45 am]

BILLING CODE 4510–30–M

[TA–W–30,690]

Pennzoil Products Co., Roosevelt, Utah Refinery, Roosevelt, Utah; Negative Determination Regarding Application for Reconsideration

By an application postmarked April 28, 1995, one of the petitioners requested administrative reconsideration of the subject petition for trade adjustment assistance. The denial notice was signed on March 30, 1995 and published in the **Federal Register** on April 27, 1995 (60 FR 20763).

Pursuant to 29 CFR 90.18(c) reconsideration may be granted under the following circumstances:

(1) If it appears on the basis of facts not previously considered that the determination complained of was erroneous;

(2) If it appears that the determination complained of was based on a mistake in the determination of facts not previously considered; or

(3) If in the opinion of the Certifying Officer, a misinterpretation, of facts or of the law justified reconsideration of the decision.

The investigation findings show that the workers were primarily engaged in employment related to the production of petroleum products.

The Department's denial was based on the fact that the ''contributed importantly'' test of the increased import criterion of the Group Eligibility Requirements of the Trade Act was not met. The ''contributed importantly'' test is generally demonstrated through a survey of the workers' firm's customers.

The petroleum products produced at Pennzoil's Roosevelt, Utah refinery, were sold to wholesale or retail customers. The Department's survey of Pennzoil's customers shows that they did not import petroleum products during the relevant periods.

The Petitioner claims that the international price of crude oil affects the price of domestic crude oil and was responsible for the worker separations at Pennzoil.

Price is not a criterion for a worker group certification, and would not form a basis for a worker group certification.

The Trade Act was not intended to provide TAA benefits to everyone who is in some way affected by foreign competition but only to those who experienced a decline in sales or production and employment and an increase in imports of like or directly competitive products which ''contributed importantly'' to declines in sales or production and employment.

Conclusion

After review of the application and investigative findings, I conclude that there has been no error or misinterpretation of the law or of the facts which would justify reconsideration of the Department of Labor's prior decision. Accordingly, the application is denied.

Signed at Washington, DC, this 23 day of May 1995.

Victor J. Trunzo,

Program Manager, Policy and Reemployment Services, Office of Trade Adjustment Assistance.

[FR Doc. 95–13524 Filed 6–1–95; 8:45 am]

BILLING CODE 4510–30–M

Employment Standards Administration Wage and Hour Division

Minimum Wages for Federal and Federally Assisted Construction; General Wage Determination Decisions

General wage determination decisions of the Secretary of Labor are issued in accordance with applicable law and are based on the information obtained by the Department of Labor from its study of local wage conditions and data made available from other sources. They specify the basic hourly wage rates and fringe benefits which are determined to be prevailing for the described classes of laborers and mechanics employed on construction projects of a similar character and in the localities specified therein.

The determinations in these decisions of prevailing rates and fringe benefits have been made in accordance with 29 CFR Part 1, by authority of the Secretary of Labor pursuant to the provisions of the Davis-Bacon Act of March 3, 1931, as amended (46 Stat. 1494, as amended, 40 U.S.C. 276a) and of other Federal statutes referred to in 29 CFR Part 1, Appendix, as well as such additional statutes as may from time to time be enacted containing provisions for the payment of wages determined to be prevailing by the Secretary of Labor in accordance with the Davis-Bacon Act. The prevailing rates and fringe benefits determined in these decisions shall, in accordance with the provisions of the foregoing statutes, constitute the minimum wages payable on Federal and federally assisted construction projects to laborers and mechanics of the specified classes engaged on contract work of the character and in the localities described therein.

Good cause is hereby found for not utilizing notice and public comment procedure thereon prior to the issuance of these determinations as prescribed in 5 U.S.C. 553 and not providing for delay in the effective date as prescribed in that section, because the necessity to issue current construction industry wage determinations frequently and in large volume causes procedures to be impractical and contrary to the public interest.

General wage determination decisions, and modifications and supersedes decisions thereto, contain no expiration dates and are effective from their date of notice in the **Federal Register**, or on the date written notice is received by the agency, whichever is earlier. These decisions are to be used in accordance with the provisions of 29 CFR Parts 1 and 5. Accordingly, the applicable decision, together with any modifications issued, must be made a part of every contract for performance of the described work within the geographic area indicated as required by an applicable Federal prevailing wage law and 29 CFR Part 5. The wage rates and fringe benefits, notice of which is published herein, and which are contained in the Government Printing Office (GPO) document entitled ''General Wage Determinations Issued Under The Davis-Bacon And Related Acts,'' shall be the minimum paid by contractors and subcontractors to laborers and mechanics.

Any person, organization, or governmental agency having an interest in the rates determined as prevailing is encouraged to submit wage rate and fringe benefit information for consideration by the Department. Further information and self-explanatory forms for the purpose of submitting this data may be obtained by writing to the U.S. Department of Labor, Employment Standards Administration, Wage and Hour Division, Division of Wage Determinations, 200 Constitution Avenue, NW., Room S–3014, Washington, DC 20210.

Modification to General Wage Determinations Decisions

The number of decisions listed in the Government Printing Office document entitled ''General Wage Determinations Issued Under the Davis-Bacon and Related Acts'' being modified are listed by volume and State. Dates of publication in the **Federal Register** are

in parentheses following the decisions being modified.

Volume I

New Jersey
NJ950002 (Feb. 10, 1995)
NJ950003 (Feb. 10, 1995)
NJ950004 (Feb. 10, 1995)
NJ950007 (Feb. 10, 1995)
NJ9500015 (Feb. 10, 1995)
New York
NY950002 (Feb. 10, 1995)
NY950003 (Feb. 10, 1995)
NY950007 (Feb. 10, 1995)
NY950014 (Feb. 10, 1995)
NY950018 (Feb. 10, 1995)
NY950021 (Feb. 10, 1995)
NY950022 (Feb. 10, 1995)
NY950026 (Feb. 10, 1995)
NY950033 (Feb. 10, 1995)
NY950039 (Feb. 10, 1995)
NY950048 (Feb. 10, 1995)
NY950049 (Feb. 10, 1995)
NY950072 (Feb. 10, 1995)
NY950077 (Feb. 17, 1995)

Volume II

Pennsylvania
PA950004 (Feb. 10, 1995)
PA950005 (Feb. 10, 1995)
PA950006 (Feb. 10, 1995)
PA950007 (Feb. 10, 1995)
PA950008 (Feb. 10, 1995)
PA950009 (Feb. 10, 1995)
PA9500010 (Feb. 10, 1995)
PA9500012 (Feb. 10, 1995)
PA9500014 (Feb. 10, 1995)
PA9500019 (Feb. 10, 1995)
PA9500021 (Feb. 10, 1995)
PA9500023 (Feb. 10, 1995)
PA9500024 (Feb. 10, 1995)
PA9500029 (Feb. 10, 1995)
PA9500040 (Feb. 10, 1995)
PA9500052 (Feb. 10, 1995)
PA9500060 (Feb. 10, 1995)
PA9500063 (Feb. 10, 1995)

Volume III

Alabama
AL950008 (Feb. 10, 1995)
AL9500034 (Feb. 10, 1995)
AL9500052 (Feb. 10, 1995)
Georgia
GA950031 (Feb. 10, 1995)
Kentucky
KY950001 (Feb. 10, 1995)
KY950002 (Feb. 10, 1995)
KY950003 (Feb. 10, 1995)
KY950004 (Feb. 10, 1995)
KY950006 (Feb. 10, 1995)
KY950007 (Feb. 10, 1995)
KY950025 (Feb. 10, 1995)
KY950026 (Feb. 10, 1995)
KY950027 (Feb. 10, 1995)
KY950028 (Feb. 10, 1995)
KY950029 (Feb. 10, 1995)
KY950032 (Feb. 10, 1995)
KY950033 (Feb. 10, 1995)
KY950034 (Feb. 10, 1995)
KY950035 (Feb. 10, 1995)
KY950054 (Feb. 10, 1995)

Volume IV

Illinois
IL950001 (Feb. 10, 1995)
IL950002 (Feb. 10, 1995)
IL950003 (Feb. 10, 1995)
IL950004 (Feb. 10, 1995)
IL950005 (Feb. 10, 1995)
IL950006 (Feb. 10, 1995)
IL950007 (Feb. 10, 1995)
IL950008 (Feb. 10, 1995)
IL950009 (Feb. 10, 1995)
IL950011 (Feb. 10, 1995)
IL950012 (Feb. 10, 1995)
IL950013 (Feb. 10, 1995)
IL950014 (Feb. 10, 1995)
IL950015 (Feb. 10, 1995)
IL950016 (Feb. 10, 1995)
IL950018 (Feb. 10, 1995)
IL950023 (Feb. 10, 1995)
IL950024 (Feb. 10, 1995)
IL950025 (Feb. 10, 1995)
IL950033 (Feb. 10, 1995)
IL950038 (Feb. 10, 1995)
IL950039 (Feb. 10, 1995)
IL950040 (Feb. 10, 1995)
IL950041 (Feb. 10, 1995)
IL950044 (Feb. 10, 1995)
IL950045 (Feb. 10, 1995)
IL950047 (Feb. 10, 1995)
IL950050 (Feb. 10, 1995)
IL950054 (Feb. 10, 1995)
IL950057 (Feb. 10, 1995)
IL950059 (Feb. 10, 1995)
IL950066 (Feb. 10, 1995)
IL950072 (Feb. 10, 1995)
IL950076 (Feb. 10, 1995)
IL950080 (Feb. 10, 1995)
IL950083 (Feb. 10, 1995)
IL950085 (Feb. 10, 1995)
IL950086 (Feb. 10, 1995)
IL950087 (Feb. 10, 1995)
IL950088 (Feb. 10, 1995)
IL950093 (Feb. 10, 1995)
Michigan
MI950001 (Feb. 10, 1995)
MI950002 (Feb. 10, 1995)
MI950003 (Feb. 10, 1995)
MI950004 (Feb. 10, 1995)
MI950005 (Feb. 10, 1995)
MI950007 (Feb. 10, 1995)
MI950012 (Feb. 10, 1995)
MI950017 (Feb. 10, 1995)
MI950034 (Feb. 10, 1995)
Minnesota
MN950003 (Feb. 10, 1995)
MN950005 (Feb. 10, 1995)
MN950007 (Feb. 10, 1995)
MN950008 (Feb. 10, 1995)
MN950012 (Feb. 10, 1995)
MN950015 (Feb. 10, 1995)
MN950027 (Feb. 10, 1995)
MN950031 (Feb. 10, 1995)
MN950035 (Feb. 10, 1995)
MN950039 (Feb. 10, 1995)
MN950043 (Feb. 10, 1995)
MN950045 (Feb. 10, 1995)
MN950046 (Feb. 10, 1995)
MN950047 (Feb. 10, 1995)
MN950049 (Feb. 10, 1995)
MN950058 (Feb. 10, 1995)
MN950059 (Feb. 10, 1995)
MN950061 (Feb. 10, 1995)
Ohio
OH950001 (Feb. 10, 1995)
OH950002 (Feb. 10, 1995)
OH950003 (Feb. 10, 1995)
OH950012 (Feb. 10, 1995)
OH950024 (Feb. 10, 1995)
OH950026 (Feb. 10, 1995)
OH950027 (Feb. 10, 1995)
OH950029 (Feb. 10, 1995)
OH950032 (Feb. 10, 1995)
OH950034 (Feb. 10, 1995)
OH950035 (Feb. 10, 1995)
OH950036 (Feb. 10, 1995)

Volume V

Iowa
IA950004 (FEB. 10, 1995)
IA950005 (FEB. 10, 1995)
IA950009 (FEB. 10, 1995)
IA950010 (FEB. 10, 1995)
IA950014 (FEB. 10, 1995)
IA950016 (FEB. 10, 1995)
IA950019 (FEB. 10, 1995)
IA950047 (FEB. 10, 1995)
Louisiana
LA950001 (FEB. 10, 1995)
LA950005 (FEB. 10, 1995)
LA950014 (FEB. 10, 1995)
LA950018 (FEB. 10, 1995)
Missouri
MO950001 (FEB. 10, 1995)
MO950002 (FEB. 10, 1995)
MO950003 (FEB. 10, 1995)
MO950004 (FEB. 10, 1995)
MO950005 (FEB. 10, 1995)
MO950006 (FEB. 10, 1995)
MO950007 (FEB. 10, 1995)
MO950008 (FEB. 10, 1995)
MO950009 (FEB. 10, 1995)
MO950010 (FEB. 10, 1995)
MO950011 (FEB. 10, 1995)
MO950012 (FEB. 10, 1995)
MO950013 (FEB. 10, 1995)
MO950014 (FEB. 10, 1995)
MO950015 (FEB. 10, 1995)
MO950016 (FEB. 10, 1995)
MO950017 (FEB. 10, 1995)
MO950019 (FEB. 10, 1995)
MO950020 (FEB. 10, 1995)
MO950041 (FEB. 10, 1995)
MO950042 (FEB. 10, 1995)
MO950043 (FEB. 10, 1995)
MO950045 (FEB. 10, 1995)
MO950046 (FEB. 10, 1995)
MO950047 (FEB. 10, 1995)
MO950048 (FEB. 10, 1995)
MO950049 (FEB. 10, 1995)
MO950050 (FEB. 10, 1995)
MO950051 (FEB. 10, 1995)
MO950052 (FEB. 10, 1995)
MO950053 (FEB. 10, 1995)
MO950056 (FEB. 10, 1995)
MO950058 (FEB. 10, 1995)
MO950059 (FEB. 10, 1995)
MO950060 (FEB. 10, 1995)
MO950062 (FEB. 10, 1995)
MO950063 (FEB. 10, 1995)
MO950064 (FEB. 10, 1995)
MO950065 (FEB. 10, 1995)
MO950066 (FEB. 10, 1995)
MO950067 (FEB. 10, 1995)
MO950068 (FEB. 10, 1995)
MO950069 (FEB. 10, 1995)
MO950070 (FEB. 10, 1995)
MO950072 (FEB. 10, 1995)
MO950074 (FEB. 10, 1995)
MO950075 (FEB. 10, 1995)
MO950076 (FEB. 10, 1995)
MO950077 (FEB. 10, 1995)
MO950078 (FEB. 10, 1995)
Nebraska
NE950001 (FEB. 10, 1995)
NE950003 (FEB. 10, 1995)
NE950005 (FEB. 10, 1995)

NE950007 (FEB. 10, 1995)
NE950009 (FEB. 10, 1995)
NE950010 (FEB. 10, 1995)
NE950011 (FEB. 10, 1995)
NE950058 (FEB. 10, 1995)
NE950059 (APR. 28, 1995)

Volume VI

California
CA950001 (Feb. 10, 1995)
CA950002 (Feb. 10, 1995)
CA950004 (Feb. 10, 1995)
Colorado
CO950001 (Feb. 10, 1995)
CO950002 (Feb. 10, 1995)
CO950005 (Feb. 10, 1995)
CO950006 (Feb. 10, 1995)
CO950007 (Feb. 10, 1995)
CO950008 (Feb. 10, 1995)
CO950009 (Feb. 10, 1995)
CO950011 (Feb. 10, 1995)
CO950018 (Feb. 10, 1995)
CO950021 (Feb. 10, 1995)
CO950023 (Feb. 10, 1995)
CO950025 (Feb. 10, 1995)
Idaho
ID950001 (Feb. 10, 1995)
ID950003 (Feb. 10, 1995)
ID950005 (Feb. 10, 1995)
Montana
MT950002 (Feb. 10, 1995)
North Dakota
ND950015 (Feb. 10, 1995)
ND950016 (Feb. 10, 1995)
ND950017 (Feb. 10, 1995)
ND950018 (Feb. 10, 1995)
ND950019 (Feb. 10, 1995)
ND950020 (Feb. 10, 1995)
ND950027 (Feb. 10, 1995)
Oregon
OR950001 (Feb. 10, 1995)
South Dakota
SD950002 (Feb. 10, 1995)
SD950024 (Feb. 10, 1995)
SD950041 (Feb. 10, 1995)
Washington
WA950001 (Feb. 10, 1995)
WA950002 (Feb. 10, 1995)
WA950003 (Feb. 10, 1995)
WA950007 (Feb. 10, 1995)
WA950010 (Feb. 10, 1995)

General Wage Determination Publication

General wage determinations issued under the Davis-Bacon and related Acts, including those noted above, may be found in the Government Printing Office (GPO) document entitled ''General Wage Determinations Issued Under The Davis-Bacon and Related Acts''. This publication is available at each of the 50 Regional Government Depository Libraries and many of the 1,400 Government Depository Libraries across the country.

The general wage determinations issued under the Davis-Bacon and related Acts are available electronically by subscription to the FedWorld Bulletin Board System of the National Technical Information Service (NTIS) of the U.S.

Hard-copy subscriptions may be purchased from: Superintendent of Documents, U.S. Government Printing Office, Washington, D.C. 20402, (202) 512–1800.

When ordering hard-copy subscription(s), be sure to specify the State(s) of interest, since subscriptions may be ordered for any or all of the six separate volumes, arranged by State. Subscriptions include an annual edition (issued in January or February) which included all current general wage determinations for the States covered by each volume. Throughout the remainder of the year, regular weekly updates will be distributed to subscribers.

Signed at Washington, D.C. This 26th Day of May 1995.

Alan L. Moss,

Director, Division of Wage Determination.

[FR Doc. 95–13431 Filed 6–1–95; 8:45 am]

BILLING CODE 4510–27–M

NATIONAL SCIENCE FOUNDATION

Special Emphasis Panel in Advanced Scientific Computing: Notice of Meeting

In accordance with the Federal Advisory Committee Act (Pub. L. 92–463, as amended), the National Science Foundation announces the following meeting:

Name: Special Emphasis Panel in Advanced Scientific Computing (# 1185).

Date and Time. June 22/23, 1995, 8:30 am to 5 pm.

Place: National Science Foundation, 4201 Wilson Boulevard Suite 1122, Arlington, VA 22230.

Type of Meeting: Closed.

Contact Person: Dr. Richard Hirsh, Deputy Division Director, Centers Program, Suite 1122, National Science Foundation, 4201 Wilson Boulevard, Arlington, VA 22230 (703) 306–1970.

Purpose of Meeting: To provide recommendations and advice concerning proposals submitted to NSF for financial support.

Agenda: To review and evaluate Metacenter Regional Alliance Research proposals as part of the selection process for awards.

Reason for Closing: The proposals being reviewed include information of a proprietary or confidential nature, including technical information; financial data, such as salaries; and personal information concerning individuals associated with the proposals. These matters are exempt under 5 U.S.C. 552b(c), (4) and (6) of the Government in the Sunshine Act.

Dated: May 30, 1995.

M. Rebecca Winkler,

Committee Management Officer.

[FR Doc. 95–13556 Filed 6–1–95; 8:45 am]

BILLING CODE 7555–01–M

Special Emphasis Panel in Biological Sciences; Notice of Meeting

In accordance with the Federal Advisory Committee Act (Pub. L. 92–463, as amended), the National Science Foundation announces the following meeting:

Name: Special Emphasis Panel in Biological Sciences (#1754).

Date and Time: June 19–23, 1995.

Place. National Science Foundation, 4201 Wilson Boulevard, Room 680, Arlington, VA 22230.

Type of Meeting: Closed.

Contact Person: Dr. Penelope Firth, Division of Environmental Biology, Room 635, National Science Foundation, 4201 Wilson Boulevard, Arlington, VA 22230. Telephone: (703) 306–1483.

Purpose of Meeting: To provide advice and recommendations concerning proposals submitted to NSF and EPA for financial support.

Agenda: To review and evaluate Interagency Announcement of Opportunity, NSF/EPA Partnership for Environmental Research proposals as part of the selection process for awards.

Reason for Closing: The proposals being reviewed include information of a proprietary or confidential nature, including technical information; financial data, such as salaries; and personal information concerning individuals associated with the proposals. These matters are exempt under 5 U.S.C. 552b(c), (4) and (6) of the Government in the Sunshine Act.

Dated: May 30, 1995.

M. Rebecca Winkler,

Committee Management Officer.

[FR Doc. 95–13549 Filed 6–1–95; 8:45 am]

BILLING CODE 7555–01–M

Special Emphasis Panel in Civil and Mechanical Systems; Notice of Meeting

In accordance with the Federal Advisory Committee Act (Pub. L. 92–463, as amended), the National Science Foundation announced the following meeting:

Name: Special Emphasis Panel in Civil and Mechanical Systems.

Date and Time: June 21, 1995; 8:30 a.m. to 4:00 p.m.

Place: National Science Foundation, Room 580, Arlington, VA 22230.

Notice of Meeting: Closed.

Contact Person: Dr. Jorn Larsen-Basse, Program Director, 4201 Wilson Blvd., Arlington, VA 22230, Telephone: (703) 306–1360.

Purpose of Meeting: To provide advice and recommendations concerning proposals submitted to NSF for financial support.

Agenda: Review and evaluate Civil and Mechanical Systems NSF IIA proposals.

Reason for Closing: The proposals being reviewed include information of a proprietary or confidential nature, including

technical information, financial data, such as salaries, and personal information concerning individuals associated with the proposals. These matters are exempt under 5 U.S.C. 552b(c) (4) and (6) of the Government in the Sunshine Act.

Dated: May 30, 1995.

M. Rebecca Winkler,

Committee Management Officer.

[FR Doc. 95–13553 Filed 6–1–95; 8:45 am]

BILLING CODE 7555–01–M

Special Emphasis Panel in Design, Manufacture, and Industrial Innovation; Notice of Meeting

In accordance with the Federal Advisory Committee Act (Pub. L. 92–463, as amended), the National Science Foundation announces the following meeting:

Name: Special Emphasis Panel in Design, Manufacture, and Industrial Innovation–#1194

Date and Time: June 26–27, 1995, 8:30 a.m.–5:00 p.m.

Place: Rooms 310 and 340, National Science Foundation, 4201 Wilson Boulevard, Arlington, VA 22230.

Type of Meeting: Closed.

Contact Person: Dr. Christina Gabriel, National Science Foundation, 4201 Wilson Boulevard, Arlington, VA 22230, (703) 306–1330.

Purpose of Meeting: To provide advice and recommendations concerning proposals submitted to the NSF for financial support.

Agenda: To review and evaluate Management of Technological Innovation (MOTI) proposals as part of the selection process for awards.

Reason for Closing: The proposals being reviewed include information of a proprietary or confidential nature, including technical information; financial data, such as salaries; and personal information concerning individuals associated with the proposals. These matters are exempt under 5 U.S.C. 552b(c) (4) and (6) of the Government in the Sunshine Act.

Dated: May 30, 1995.

M. Rebecca Winkler,

Committee Management Officer.

[FR Doc. 95–13536 Filed 6–1–95; 8:45 am]

BILLING CODE 7555–01–M

Special Emphasis Panel in Design, Manufacture and Industrial Innovation; Notice of Meeting

In accordance with the Federal Advisory Committee Act (Pub. L. 92–463, as amended), the National Science Foundation announces the following meeting:

Name: Special Emphasis Panel in Design, Manufacture and Industrial Innovation (#1194)

Date and Time: June 22 and 23, 1995, 8:30 am to 5:00 pm.

Place: Room 320, NSF, 4201 Wilson Boulevard, Arlington VA.

Type of Meeting: Closed.

Contact Person: Mr. Darryl G. Gorman, Program Director, Small Business Technology Transfer Program, National Science Foundation, 4201 Wilson Boulevard, Arlington VA 22230, Telephone (703) 306–1391.

Purpose of Meeting: To provide advice and recommendations concerning proposals submitted to NSF for financial support.

Agenda: To review and evaluate Small Business Technology Transfer [STTR] proposals as part of the selection for awards.

Reason for closing: The proposals being reviewed include information of a proprietary or confidential nature, including technical information, financial data, such as salaries and personal information concerning individuals associated with the proposals. These matters are exempt under 5 U.S.C. 552b(c) (4) and (6) of the Government in the Sunshine Act.

Dated: May 30, 1995

M. Rebecca Winkler,

Committee Management Officer.

[FR Doc. 95–13554 Filed 6–1–95; 8:45 am]

BILLING CODE 7555–01–M

Special Emphasis Panel in Electrical and Communications Systems; Notice of Meeting

In accordance with the Federal Advisory Committee Act (Pub. L. 92–463, as amended), the National Science Foundation announces the following meeting.

Name: Special Emphasis Panel in Electrical and Communications Systems (#1196).

Date and Time: June 19–20, 1995; 8:00 am–5:00 pm.

Place: National Science Foundation, Room 680, 4201 Wilson Blvd., Arlington, VA 22230.

Type of Meeting: Closed.

Contact Person: Dr. Albert B. Harvey, Program Director, ECS, Room 675, National Science Foundation, 4201 Wilson Blvd., Arlington, VA 22230.Phone: (703) 306–1319.

Purpose of Meeting: To provide advice and recommendations concerning proposals submitted to NSF for financial support.

Agenda: To review and evaluate applications of regular research proposals.

Reason for Closing: The proposals being reviewed include information of a proprietary or confidential nature, including technical information; financial data such as salaries; and personal information concerning individuals associated with the proposals. These matters are exempt under 5 U.S.C. 552b(c) (4) and (6) of the Government in the Sunshine Act.

Dated: May 30, 1995.

M. Rebecca Winkler,

Committee Management Officer.

[FR Doc. 95–13552 Filed 6–1–95; 8:45 am]

BILLING CODE 7555–01–M

Advisory Committee for Engineering; Notice of Meeting

In accordance with the Federal Advisory Committee Act (Pub. L. 92–463, as amended), the National Science Foundation announces the following meeting.

Name and Committee Code: Advisory Committee for Engineering (1170).

Date and Time: June 19, 1995: 8:30 a.m. to 5:00 p.m.

Place: Room 530, National Science Foundation, 4201 Wilson Boulevard, Arlington, VA 22230.

Type of Meeting: Closed.

Contact Person: Dr. Devendra P. Garg, Program Director, Dynamic Systems and Control Program, Division of Civil and Mechanical Systems, Telephone: (703) 306–1361.

Purpose of Meeting: To carry out Committee of Visitors (COV) review, including examination of decisions on proposals, reviewer comments, and other privileged materials.

Agenda: To provide oversight review of the Dynamic Systems and Control Program.

Reason for Closing: The meeting is closed to the public because the Committee is reviewing proposal actions that will include privileged intellectual property and personal information that could harm individuals if they are disclosed. If discussions were open to the public, these matters that are exempt under 5 U.S.C. 552b(c) (4) and (6) of the Government in the Sunshine Act would be improperly disclosed.

Dated: May 30, 1995.

M. Rebecca Winkler,

Committee Management Officer.

[FR Doc. 95–13551 Filed 6–1–95; 8:45 am]

BILLING CODE 7555–01–M

Task Force on the Future of the NSF Supercomputer Centers Program; Notice of Meeting:

In accordance with the Federal Advisory Committee Act (Pub. L. 92–463, as amended), the National Science Foundation announces the following meeting:

Name: Task Force on the Future of the NSF Supercomputer Centers Program (#1982).

Date and Time: June 16, 1995 from 8:30 am–12 noon.

Place. Tentative: Conference Center, San Francisco Airport San Francisco, CA.

Type of Meeting: Open.

Contact Person: Please contact Dr. Robert Borchers for the exact location. Dr. Borchers is the Director, Division of Advanced Scientific Computing, Directorate for Computer & Information Science & Engineering, National Science Foundation, 4201 Wilson Boulevard, Arlington, VA 22230, 703/306–1970.

Minutes: May be obtained from the contact person listed above.

Meeting Purpose: The objective of the Task Force is to advise the NSF on the future of

its Supercomputing Centers Program considering the changing nature of computing and information science and technology. Its scope will be limited to NSF's support for advanced computational science.

Agenda: Deliberation of the Draft Report.

Reason for Late Notice: Difficulty with scheduling meeting location.

Dated: May 30, 1995.

M. Rebecca Winkler,

Committee Management Officer.

[FR Doc. 95–13555 Filed 6–1–95; 8:45 am]

BILLING CODE 7555–01–M

Advisory Committee for Social, Behavioral and Economic Sciences; Subcommittee on Transformations to Quality Organizations; Notice of Meeting

In accordance with the Federal Advisory Committee Act (Pub. L. 92–463, as amended), the National Science Foundation announces the following meeting:

Name: Advisory Committee for Social, Behavioral and Economic Sciences; Subcommittee on Transformations to Quality Organizations (#1171)

Date & Time: June 21, 1995, 8:30 am–3:30 pm.

Place: Rm 320, National Science Foundation, 4201 Wilson Blvd., Arlington VA.

Type of Meeting: Open.

Contact Person: Dr. Marietta Baba, Program Director, Transformations to Quality Organizations Program, National Science Foundation, 4201 Wilson Boulevard, Room 910, Arlington, VA 22230, 703/306–1757, x7210.

Minutes: May be obtained from the contact person listed above.

Meeting Purpose: To provide advice, recommendations, and oversight concerning support for research, education, and human resources in the areas of the social, behavioral, and economic sciences. To identify preliminary plans to advance Transformations to Quality Organizations (TQO) effort.

Agenda

1. Welcome and Introductions
2. Opening Remarks
3. Importance of Research
4. Role of Subcommittee
5. Current Status of Program
6. Assessment of Year One
7. Work Plan for Year Two
8. Next Steps

Dated: May 30, 1995.

M. Rebecca Winkler,

Committee Management Officer.

[FR Doc. 95–13550 Filed 6–1–95; 8:45 am]

BILLING CODE 7555–01–M

NUCLEAR REGULATORY COMMISSION

Proposed Generic Letter; Relocation of the Pressure Temperature Limit Curves and Low Temperature Overpressure Protection System Limits

AGENCY: Nuclear Regulatory Commission.

ACTION: Notice of opportunity for public comment.

SUMMARY: The Nuclear Regulatory Commission (NRC) is proposing to issue a generic letter. This draft generic letter would allow licensees to voluntarily relocate the pressure temperature limit curves and low temperature overpressure protection system limits from the technical specifications to a licensee-controlled document. The NRC is seeking comment from interested parties regarding both the technical and regulatory aspects of the proposed generic letter presented under the Supplementary Information heading. This proposed generic letter and supporting documentation were sent to the Committee to Review Generic Requirements (CRGR). CRGR will review the proposed generic letter after resolution and incorporation of public comments. Relevant information, including model technical specifications and a model safety evaluation, that was sent to the CRGR is available in the Public Document Rooms under accession number 9505220128. The NRC will consider comments received from interested parties in the final evaluation of the proposed generic letter. The NRC's final evaluation will include a review of the technical position and, when appropriate, an analysis of the value/impact on licensees. Should this generic letter be issued by the NRC, it will become available for public inspection in the Public Document Rooms.

DATES: Comment period expires July 3, 1995. Comments submitted after this date will be considered if it is practical to do so, but assurance of consideration cannot be given except for comments received on or before this date.

ADDRESSES: Submit written comments to Chief, Rules Review and Directives Branch, U.S. Nuclear Regulatory Commission, Washington, DC 20555. Written comments may also be delivered to 11545 Rockville Pike, Rockville, Maryland, from 7:30 am to 4:15 pm, Federal workdays. Copies of written comments received may be examined at the NRC Public Document Room, 2120 L Street NW. (Lower Level), Washington, DC.

FOR FURTHER INFORMATION CONTACT: Maggalean W. Weston, Technical Specifications Branch, Division of Project Support, Office of Nuclear Reactor Regulation, U.S. Nuclear Regulatory Commission, Washington, DC 20555–001, Telephone (301) 415–3151.

SUPPLEMENTARY INFORMATION:

NRC Generic Letter 95–XX: Relocation of the Pressure Temperature Limit Curves and Low Temperature Overpressure Protection System Limits

Addressees

All holders of operating licenses or construction permits for nuclear power reactors.

Purpose

The U.S. Nuclear Regulatory Commission (NRC) is issuing this generic letter to advise licensees that they may request a license amendment to relocate the pressure temperature (P/T) limit curves and low temperature overpressure protection (LTOP) system limits from the technical specifications (TS) to a pressure temperature limits report (PTLR) or a similar document.

Description of Circumstances

During the development of the improved standard technical specifications (STS), a change was proposed to relocate the P/T curves and LTOP setpoint curves and values currently contained in the TS to a licensee-controlled document. As part of the improvements to the STS, the NRC staff agreed with the industry that the curves and setpoints may be relocated outside the TS where these limits could be maintained more efficiently and at a lower cost to the licensee, provided the parameters for constructing the curves and setpoints are derived using a methodology approved by the NRC.

Discussion

Technical specifications include limiting conditions for operation (LCOs) that establish P/T and LTOP system limits for the reactor coolant system. The limits are defined by figures and values that provide an acceptable range of operating temperatures and pressures for heatup, cooldown, low temperature overpressure, criticality, and inservice leak and hydrostatic testing conditions. These parameters are generally valid for a specified number of effective full-power years.

License amendments are generally required at the end of the effective period for P/T limit curves or when surveillance specimens are withdrawn

and tested. Also, each time the curves are revised, the LTOP system must be reevaluated to ensure that its functional requirements can still be met using relief valves or other methods. Processing amendment requests for changes to TS that are developed using an accepted methodology is an unnecessary burden on licensee and NRC resources. An alternative approach for the control of these limits was proposed during the development of the improved STS. This approach, like that used for the core operating limits, would relocate the P/T curves and the LTOP setpoint curves or values to a PTLR or a similar document and reference that document in the affected LCOs and bases.

The methodology for determining P/T and LTOP system limit parameters must comply with the specific requirements of Appendices G and H to Part 50 of Title 10 of the *Code of Federal Regulations* (10 CFR), be documented in an NRC-approved topical report or in a plant-specific submittal, and be incorporated by reference into the TS. As such, subsequent changes in the methodology must be approved by a license amendment.

Requested Information

Licensees and applicants who voluntarily choose to adopt this line item improvement are encouraged to propose changes that are consistent with the attached guidance. The guidance requires that the licensee be able to reference a methodology for developing the curves and setpoints that has been approved by the NRC, develop a PTLR or a similar document that contains the figures, values, parameters, and explanations derived from the methodology, and make appropriate changes to the applicable sections of the TS. The NRC project manager for the facility will review the amendment requests that conform to the guidance in this generic letter and coordinate the appropriate staff review of the methodology proposed for calculating the P/T limit curves and the LTOP system limits. Amendment requests that do not conform to the guidance in this generic letter will require additional review time.

Required Response

Licensees and applicants who voluntarily choose to adopt this line item improvement should submit a response to the requested information described above.

Backfit Discussion

Any action by licensees to propose TS changes in accordance with the guidance of this generic letter is voluntary and, therefore, not a backfit analysis.

Guidance for a Proposed License Amendment To Relocate the Pressure Temperature Limit Curves and Low Temperature Overpressure Protection System Limits

Introduction

This generic letter provides guidance for preparing a license amendment request to modify the technical specifications (TS) to relocate the pressure temperature (P/T) limit curves and low temperature overpressure protection (LTOP) system limits currently contained in the TS to a pressure temperature limits report (PTLR) or a similar document. This alternative was based on a change included in the improved standard technical specifications (STS) to remove the P/T limit curves and LTOP system limits from the TS and relocate them to a PTLR or a similar document to reduce the number of amendment requests associated with changes to the P/T limit curves and LTOP system limits. Since an amendment request must be submitted whenever a change is made to the TS, the relocation of the P/T curves and LTOP system limits will result in a resource savings for the licensees and the NRC by eliminating unnecessary license amendment requests for changes to the P/T limit curves and LTOP system limits in TS when surveillance specimens are withdrawn and tested and additional vessel toughness data become available. To relocate the P/T curves and LTOP system limits from the TS, the licensee must be able to reference a methodology approved by the NRC for deriving the parameters used for constructing the curves and setpoints, develop a PTLR or a similar document, and make appropriate changes to the applicable sections of the TS.

In evaluating the relocation, the NRC staff concluded that, while it is essential to safety to operate the plant within the bounds of P/T limits and to satisfy the regulations that ensure the integrity of the reactor coolant pressure boundary (RCPB), the periodic adjustment of those limits to account for time-dependent parametric changes could be calculated in accordance with a methodology approved by the NRC. Criterion 2 of the Commission's final policy on TS improvements, which was published in the **Federal Register** (58 FR 39132) on July 22, 1993, requires that the TS include operating restrictions (pressure/temperature limits) needed to preclude unanalyzed accidents and transients. However, once the methodology is approved, the licensee may modify the figures, values, and parameters without the need for a license amendment and without affecting nuclear safety, provided these changes are determined using the approved methodology and are consistent with all applicable limits of the plant design assumptions as stated in the FSAR. Additionally, the licensee must submit to the NRC a formal PTLR or a similar document containing the figures, values, and parameters derived from the application of the methodology approved by the NRC. This reporting requirement augments a reporting requirement that is already in effect. Section III of Appendix H currently requires a summary technical report of data relating to capsule withdrawal and specimen test results. Application of these results will also be included in the PTLR. This report will allow the NRC staff to continue monitoring the status of the structural integrity of the reactor vessel even though prior NRC approval of the changes to these limits would not be required if they do not involve an unreviewed safety question.

A new provision was also added to the administrative controls section of the TS indicating that the figures, values, and parameters for inclusion in the PTLR will be verified after each reactor vessel fluence period or when surveillance specimens are withdrawn and tested and a report submitted to the NRC. Hence, the staff can confirm proper application of the methodology approved by the NRC. Further, the PTLR will be referenced in the TS so that the same degree of control on plant operation will be maintained. As a result, this alternative provides the same assurance of compliance with design specifications as before, yet removes the unnecessary burden on both plant and NRC staff of processing amendment requests.

Discussion

Technical specifications include limiting conditions for operation (LCOs) that establish P/T limits for the RCS. This system is designed to withstand the effects of cyclic loads resulting from system temperature and pressure changes. These cyclic loads are introduced by normal load transients, reactor trips, startup and shutdown operations, and hydrostatic and leak rate tests. During startup and shutdown, the rates of temperature and pressure changes are limited so that the maximum specified heatup and cooldown rates are consistent with the design assumptions and satisfy operating limits that provide a wide

margin of safety to brittle failure of the reactor vessel. The P/T limits are periodically modified as the reactor vessel material toughness decreases as a result of material embrittlement caused by neutron irradiation. The periodic modifications are necessary when the applicable effective full-power years (EFPYs) for the P/T limits contained in the TS are about to expire or the reactor vessel material surveillance data indicate an increase in the nil-ductility transition reference temperature (RT_{NDT}).

As required by Appendix G to Part 50 of Title 10 of the *Code of Federal Regulations* (10 CFR), operating P/T limits are calculated and adhered to by plant operations personnel to ensure that fracture toughness requirements for Part 50, specimens of reactor vessel material are installed near the inside reactor vessel wall and are withdrawn on a schedule to provide data on the effects of radiation fluence and the thermal environment on the vessel material. These data are used to adjust the P/T limits, as necessary, to compensate for the shift in material transition temperature as indicated by tests on the withdrawn specimens. The withdrawal and analysis of the specimens and resulting revision of the P/T limit curves make up the requirements necessary to compensate for the shift in material transition temperature. This ensures that the reactor vessel is operated at high enough temperatures to preclude brittle fracture of the vessel material.

The LTOP system controls RCS pressure at low temperatures so that the integrity of the RCPB is not compromised by violating the P/T limits of Appendix G to 10 CFR part 50. The LTOP system provides overpressure protection by limiting coolant input capability and having adequate pressure relief capacity. Each time the P/T limit curves are revised, the LTOP system must be reevaluated to ensure that its functional requirements can still be met. The LTOP system for pressure relief typically consists of two power-operated relief valves (PORVs), two residual heat removal (RHR) suction relief valves, or a combination of both. Some plants have only one PORV. The LTOP system limits consist of PORV and RHR setpoints. The RHR suction relief valves do not have variable pressure and temperature lift setpoints like the PORVs and, therefore, are still addressed in the TS. As designed for the LTOP system, each PORV is signaled to open if the RCS pressure approaches a limit determined by the LTOP system actuation logic. This logic monitors both RCS temperature and RCS pressure to determine when a condition not acceptable in the PTLR is approached. The PORV setpoints should be included in the PTLR and updated when the revised P/T limits conflict with the LTOP system limits. LTOP requirements do not apply to boiling water reactors.

Requirements for Relocating the Curves and Setpoints

Relocation of the curves and setpoints to a licensee-controlled document requires three separate licensee actions. The licensee must (1) have a methodology approved by the NRC to reference in its TS; (2) develop a report such as a PTLR or a similar document to contain the figures, values, parameters, and any explanation necessary; and (3) modify the applicable sections of the TS accordingly.

•*Methodology and PTLR*

The first two of the three requirements for relocating the P/T curves and LTOP system limits are an NRC-approved methodology and the associated reporting requirements in the PTLR. The methodology will consist of only those methods used for calculation, not the calculations themselves. The PTLR will consist of the explanations, figures, values, and parameters derived from the calculations. Since the PTLR will be provided to the NRC upon issuance after each fluence period and after approval of the methodology, a preliminary or draft PTLR should be provided when the methodology is submitted so that questions regarding the content and format can be addressed prior to its formal completion.

The following table shows the relationship between the provisions specified in the STS for the approved methodology and the requirements to be included in the methodology and the PTLR. The provisions for the methodology are those shown in the administrative controls section of the STS.

REQUIREMENTS FOR METHODOLOGY AND PTLR

Provisions for methodology from administrative controls section in sts	Minimum requirements to be included in methodology	Minimum requirements to be included in PTLR
1. The methodology shall describe how the neutron fluence is calculated (reference new Regulatory Guide when issued).	Describe transport calculation methods including computer codes and formulas used to calculate neutron fluence. Provide references.	Provide the values of neutron fluences that are used in the adjusted reference temperature (ART) calculation.
2. The Reactor Vessel Material Surveillance Program shall comply with Appendix H to 10 CFR Part 50. The reactor vessel material irradiation surveillance specimen removal schedule shall be provided, along with how the specimen examinations shall be used to update the PTLR curves.	Briefly describe the surveillance program. Licensee transmittal letter should identify by title and number report containing the Reactor Vessel Surveillance Program and surveillance capsule reports. Topical/generic report contains placeholder only. Reference Appendix H to 10 CFR Part 50.	Provide the surveillance capsule withdrawal schedule, or reference by title and number the documents where the schedule is located. Reference the surveillance capsule reports by title and number if ARTs are calculated using surveillance data.
3. Low temperature overpressure protection (LTOP) system lift setting limits developed using NRC-approved methodologies may be included in the PTLR.	Describe how the LTOP system limits are calculated applying system/thermal hydraulics and fracture mechanics. Reference SRP Section 5.2.2; Code Case N–514; ASME Code, Appendix G, Section XI as applied in accordance with 10 CFR 50.55.	Provide setpoint curves or setpoint values.
4. The adjusted reference temperature (ART) for each reactor beltline material shall be calculated, accounting for irradiation embrittlement, in accordance with Regulatory Guide 1.99, Revision 2.	Describe the method for calculating the ART using Regulatory Guide 1.99, Revision 2.	Identify both the limiting ART values and limiting materials at the 1/4T and 3/4T locations (T=vessel beltline thickness). PWRs—identify RT_{PTS} value in accordance with 10 CFR 50.61.

REQUIREMENTS FOR METHODOLOGY AND PTLR—Continued

Provisions for methodology from administrative controls section in sts	Minimum requirements to be included in methodology	Minimum requirements to be included in PTLR
5. The limiting ART shall be incorporated into the calculation of the pressure and temperature limit curves in accordance with NUREG–0800, SRP Section 5.3.2, Pressure-Temperature Limits.	Describe the application of fracture mechanics in constructing P/T curves based on ASME Code, Appendix G, Section XI, and SRP Section 5.3.2.	Provide the P/T curves for heatup, cooldown, criticality, and hydrostatic and leak tests.
6. The minimum temperature requirements of Appendix G to 10 CFR Part 50 shall be incorporated into the pressure and temperature limit curves.	Describe how the minimum temperature requirements in Appendix G to 10 CFR Part 50 are applied to P/T curves.	Identify minimum temperatures on the P/T curves such as minimum boltup temperature and hydrotest temperature.
7. Licensees who have removed two or more capsules should compare for each surveillance material the measured increase in reference temperature (RT_{NDT}) to the predicted increase in RT_{NDT}; where the predicted increase in RT_{NDT} is based on the mean shift in RT_{NDT} plus the two standard deviation value ($2\sigma_{\Delta}$) specified in Regulatory Guide 1.99, Revision 2. If the measured value exceeds the predicted value (increase in $RT_{NDT} + 2\sigma_{\Delta}$), the licensee should provide a supplement to the PTLR to demonstrate how the results affect the approved methodology.	Describe how the data from multiple surveillance capsules are used in the ART calculation. Describe procedure if measured value exceeds predicted value. WHEN OTHER PLANT DATA ARE USED ..... 1. Identify the source(s) of data when other plant data are used. 2.a Identify by title and number the safety evaluation report that approved the use of data for the plant. Justify applicability. OR 2.b Compare licensee data with other plant data for both the radiation environments (e.g., neutron spectrum, irradiation temperature) and the surveillance test results.	Provide supplemental data and calculations of the chemistry factor in the PTLR if the surveillance data are used in the ART calculation. Evaluate the surveillance data to determine if they meet the credibility criteria in Regulatory Guide 1.99, Revision 2. Provide the results.

•Technical Specifications

The following changes must be made to the plant TS to complete the three requirements for relocating the curves and setpoints to an alternative document.

Three separate actions are necessary to modify the plant TS: (1) ''Definitions''—the addition of the definition of a named formal report (PTLR or a similar document) that would contain the explanations, figures, values, and parameters derived in accordance with an NRC-approved methodology and consistent with all of the design assumptions and stress limits for cyclic operation; (2) LCOs—the addition of references to the PTLR noting that the P/T limits shall be maintained within the limits specified in the PTLR; and (3) ''Administrative Controls''—the addition of a reporting requirement to submit to the NRC the PTLR, when it is issued, for each reactor vessel fluence period.

1. *Definitions*

Section 1.0, ''Definitions,'' should contain the following language:

Pressure Temperature Limits Report (PTLR)

The PTLR is the unit-specific document that provides the reactor vessel P/T limits and setpoints, including heatup and cooldown rates, for the current reactor vessel fluence period. These P/T limits shall be determined for each fluence period in accordance with Specification 5.X.X.X. Plant operation within these operating limits is addressed in LCO 3.X.X, ''RCS Pressure and Temperature (P/T) Limits,'' and LCO 3.X.X, ''Low Temperature Overpressure Protection (LTOP) System.''

2. *Limiting Conditions for Operation (LCOs) and Bases*

LCO 3.X.X, ''RCS Pressure and Temperature (P/T) Limits,'' and LCO 3.X.X, ''Low Temperature Overpressure Protection (LTOP) System,'' must reference the PTLR as the document where the limits and curves can be found as demonstrated in the attached model TS. The bases for these LCOs should be modified accordingly.

3. *Administrative Controls*

Section 5.X, ''Administrative Controls,'' Subsection 5.X.X, ''Reporting Requirements,'' must contain the following information:

Section 5.X.X.X *Reactor Coolant System (RCS) PRESSURE AND TEMPERATURE LIMITS REPORT (PTLR)*

a. RCS pressure and temperature limits for heatup, cooldown, LTOP, criticality, and hydrostatic testing as well as heatup and cooldown rates shall be established and documented in the PTLR for the following: [The individual specifications that address RCS pressure and temperature limits must be referenced here.]

b. The analytical methods used to determine the RCS pressure and temperature limits shall be those previously reviewed and approved by the NRC, specifically those described in the following document(s): [Identify the NRC staff approval document(s) by date.]

c. The PTLR shall be provided to the NRC upon issuance for each reactor vessel fluence period and for any revision or supplement thereto.

* * * * *

Dated at Rockville, Maryland, this 25th day of May 1995.

For the Nuclear Regulatory Commission.

Brian K. Grimes,

Director, Division of Project Support, Office of Nuclear Reactor Regulation.

[FR Doc. 95–13514 Filed 6–1–95; 8:45 am]

BILLING CODE 7590–01–P

[Docket Nos. 50–295 and 50–304]

Commonwealth Edison Company, Zion Nuclear Power Station, Units 1 and 2; Issuance of Director's Decision Under 10 CFR 2.206

Notice is hereby given that the Director, Office of Nuclear Reactor Regulation, has acted on a Petition for action under 10 CFR 2.206 received from Mr. Robert K. Rutherford and 43 other security guards, dated November 3, 1994, regarding the Zion Nuclear Power Station, Units 1 and 2.

The Petitioners requested that the NRC reassess and withdraw its approval

of the new response team member (RTM) security plan. It also demanded additional justification from both Commonwealth Edison Company (ComEd, the Licensee) and the security contractor concerning the reduction of armed guards and the defense of the plant.

The Director of the Office of Nuclear Reactor Regulation has determined that the request should be denied for the reasons stated in the ''Director's Decision Under 10 CFR 2.206'' (DD–95–09), the complete text of which follows this notice and which is available for public inspection at the Commission's Public Document Room, the Gelman Building, 2120 L Street, N.W. Washington, D.C. 20555, and at the local public document room located at the Waukegan Public Library, 128 N. County Street, Waukegan, Illinois 60085.

A copy of this Decision will be filed with the Secretary of the Commission for the Commission's review in accordance with 10 CFR 2.206(c) of the Commission's regulations. As provided by this regulation, this Decision will constitute the final action of the Commission 25 days after the date of issuance, unless the Commission, on its own motion, institutes a review of the decision within that time.

Dated at Rockville, Maryland, this 26th day of May 1995.

For the Nuclear Regulatory Commission.

William T. Russell,

Director, Office of Nuclear Reactor Regulation.

I. Introduction

By letter dated November 3, 1994, Mr. Robert K. Rutherford and 43 other security guards at the Zion Nuclear Power Station (Petitioners) requested that the Nuclear Regulatory Commission (NRC) rethink and withdraw its approval of the October 7, 1994, revisions to the Zion Nuclear Power Station security plan, and demand greater justification from both Commonwealth Edison Company (ComEd or Licensee) and its security contractor concerning the proposal to reduce the number of armed guards and the defense of the Zion Nuclear Power Station. Petitioners also requested that the manning and positioning of armed guards be reconsidered and increased to a more sound defensive position.

As the bases for these requests, Petitioners allege that (1) the revised Response Team Member (RTM) plan degrades actual plant security to the point of folly; (2) the proposed qualifications for the RTM plan are causing employee turnover, undue stress, labor problems, and inconsistency in plant defense; (3) monetary considerations should not take priority over plant defense and administrative jobs should not replace front-line security guards; (4) the total disarming of the owner controlled areas and protected areas is highly detrimental to plant defense and public safety; and (5) modern armaments and increased hostility among the general public as well as potential terrorist threats from either domestic and/or international sources have not abated. In addition, a copy of the same Petition was sent to United States Senator Paul Simon of Illinois, who referred it to the Department of Energy (DOE). The DOE forwarded the copy of the Petition to the NRC. On this copy of the Petition, a handwritten note stated the following: ''Low level waste is now being stored in the owner controlled area with no security patrols except a casual tour once per eight hour shift.''

By letter dated December 22, 1994, the NRC acknowledged receipt of the Petition and indicated that the NRC staff would take action within a reasonable time. Commonwealth Edison Company responded to the Petition by letter dated February 27, 1995. Petitioner replied to the ComEd response by letter dated February 28, 1995, supplementing the Petition with further detail.

The Licensee's letter briefly described the revision to the security plan contained in its October 7, 1994, letter and explained that although the total number of guards on-site will be decreased, the number of armed response personnel at Zion Station has not been changed and will continue to exceed the minimum requirements of 10 CFR 73.55(h)(3). The Licensee's February 27, 1995, letter also stated that certain administrative functions such as those performed by x-ray and metal detector machine operators, security badge issue personnel and personnel search will be performed by watchmen. It went on to say that four of the six ComEd nuclear sites implemented the TRM plan in 1994, another implemented it in January 1995, and Zion is scheduled for implementation in June 1995. In addition to this general description of the revision to the security plan, the letter addressed each point in the Petition.

For the reasons discussed below, I have concluded that the Petitioners have not raised any substantial safety concern, and I, therefore, deny the Petition.

II. Background

The Licensee's original security plan, submitted in a letter dated November 18, 1977, and supplemented in letters dated May 26, 1978, and June 25, 1978, included an armed response commitment. The NRC staff reviewed the security plan against the general performance requirements of 10 C.F.R. 73.55(a) and the specific requirements of 10 C.F.R. 73.55(b) through (h). In particular, the NRC staff concluded that the physical security organization met the requirements of 10 C.F.R. 73.55(b)(1) regarding the written agreement with the security contractor and the requirements of 10 C.F.R. § 73.55(b)(2) regarding the onsite presence of a full time member of the security organization with the authority to direct physical protection activities of the security organization. Based on a review, principally of the size of the site, the location of the vital areas, and the response capability of the local law enforcement agencies, the NRC staff also concluded that the security plan met the response requirements of 10 C.F.R. 73.55(h). In particular, the number of guards in the plan substantially exceeded the requirements of 10 C.F.R. 73.55(h)(3) concerning the minimum number of guards on-site. As defined in 10 C.F.R. 73.2, a guard is a uniformed individual armed with a firearm. A watchman is an individual, not necessarily uniformed or armed with a firearm, who provides protection for a plant in the course of performing other duties, and armed response personnel are persons who are uniformed, whose primary duty in the event of attempted radiological sabotage shall be to respond, armed and equipped, to prevent or delay such actions. The NRC staff concluded that Zion facility's security plan was satisfactory and that it was adequate to protect the Zion facility from threats, thefts, and radiological sabotage directed from within or outside the facility. Consequently, the NRC staff issued a Security Plan Evaluation Report (SPER), dated March 14, 1979, which concluded that upon full implementation, the security plan would meet the general performance requirements of 10 C.F.R. 73.55(a) and the specific requirements of 10 C.F.R. 73.55(b) through (h), and that the security plan would ensure that the health and safety of the public would not be endangered from threats, thefts, and radiological sabotage directed at the Zion facility.

By letter dated October 7, 1994, ComEd submitted a revision to the security plan for Zion Station pursuant to 10 C.F.R. 50.54(p), which allows licensees to make changes to their security plans without prior NRC approval, provided the changes do not

reduce the effectiveness of the plan. The October 7, 1994, revision included use of watchmen in positions that formerly used guards. The revision reduced the total number of guards on-site, but did not change the number of armed response personnel. In its October 7, 1994, submittal, the licensee stated that the revision did not reduce the effectiveness of the plan.

III. Discussion

A. Plant Security

Petitioners contend that the revised RTM security plan degrades actual plant security ''to the point of folly.'' Petitioners' supplemental letter of February 28, 1995, requests that the NRC guarantee that ComEd will not reduce the number of armed responders to five.

The total number of guards immediately available at a nuclear power plant to fulfill NRC response requirements shall nominally be ten, unless specifically required otherwise on a case-by-case basis by the Commission; however, this number may not in any case be reduced to less than five guards. 10 C.F.R. 73.55(h)(3).

Although the October 7, 1994, revision to the security plan will reduce the total number of guards on-site, the number of armed response personnel at the Zion facility will not change and will continue to exceed the minimum number of armed response personnel required by 10 C.F.R. 735(h)(3). The regulations address the use of both guards and watchmen in a security force. Historically, most licensees have used a combination of the two because there are certain job assignments that do not require use of a guard, i.e., central alarm station and secondary alarm station operator, personnel escorts in the protected and vital areas, x-ray and metal detector machine operators, security badge issue personnel, and personnel searchers. In the past, ComEd far exceeded the guard requirement, having guards even where they were not required by regulations. The NRC staff has reviewed the revised RTM security plan and concluded that it provides sufficient site security, is not inimical to the common defense and security, and that protection of the public health and safety does not require the Licensee to increase the number of its armed response personnel or guards beyond the levels reflected in the revised plan. Moreover, the NRC staff concluded that the revisions are acceptable and would not decrease the effectiveness of the security plan.

In view of the above, Petitioners have not raised a substantial safety concern regarding the reduction in the number of armed security personnel.

B. Effects of the Proposed Revision to the Zion Nuclear Power Station Security Plan on Employees and Plant Defense

Petitioners contend that the new qualifications for armed guard positions in the revised security plan will cause employee turnover, undue stress, labor problems, and inconsistency in plant defense.

Petitioners state in their February 28, 1995, supplemental letter that inconsistencies exist in that: unarmed personnel (watchmen and inspectors) are permitted to respond to intrusion alarms although they have had no physical agility testing; unarmed personnel escort vehicles into a door zone which has direct containment access, although the NRC has directed that armed personnel be placed at Vertical Pipe Chase doors to prevent such access; and unarmed personnel intermingle with armed personnel at the main gate, which could be disastrous in the event of a firearms exchange.

NRC regulations only require that unarmed personnel such as watchmen shall have no physical weaknesses or abnormalities that would adversely affect their performance of assigned security job duties, 10 C.F.R. part 73, appendix B, criterion I.B.1.a., and do not specify which type of security officer should respond to intrusion alarms. The regulations also only require that vehicles be escorted in the protected and vital areas, 10 C.F.R. 73.55(d)(4), and do not specify whether the escort must be an armed or unarmed officer. Moreover, NRC regulations do not require control of vital area doors and barriers by an armed security officer. Finally, there is no prohibition of both armed and unarmed personnel occupying access control facilities; in fact it is a common practice at many sites. It should be noted that 10 C.F.R. part 73 is ''performance oriented,'' with the specific implementation left to the licensee in the site specific security plan. The details of the specific commitments depend on the specific site factors. As noted below, the NRC staff review of the Zion security plan concluded that Zion meets the requirements of 10 C.F.R. 7355(b) through (h).

In February 1994, NRC inspectors identified security force morale as poor due to continuing personnel layoffs to reduce security force shift manning levels to the minimum required to meet security plan commitments. NRC Inspection Report No. 50–295/94005 and 50–304/94005, dated March 22, 1994. In April 1994, the NRC staff conducted another physical security inspection and concluded that overall security performance was good. In addition, the NRC staff noted that morale had improved, due to better communication with security staff members during the backshifts following key personnel changes in the contract security management organization. However, the NRC staff was concerned that continued high overtime hours worked by the security force had the potential to negatively affect performance. Security force staffing levels were sufficient to meet security plan commitments, but were strained to support unplanned maintenance work. NRC Inspection Report No. 50–295/94011 and 50–304/94011, dated May 25, 1994. The NRC staff continues to monitor the performance of the security staff through security inspections, and the continued inspections by its resident inspector staff.

During an NRC staff inspection of the Zion facility in October and November 1994, tactical response drills were conducted in which the security force demonstrated a high level of proficiency. NRC Inspection Report No. 50–295/94021 and 50–304/94021, dated December 12, 1994. The other five ComEd sites have already implemented their version of the October 7, 1994, security plan revision. An NRC inspection at LaSalle County Station in July 1994 did not find any inconsistencies in plant defense or adverse effects of the revised RTM plan on plant physical protection and safety. The NRC staff found that ComEd has continued to meet its armed response personnel commitments to the NRC. NRC Inspection Report Nos. 50–295/94005 and 50–304/94005, dated March 22, 1994; 50–295/94011 and 50–304/94011, dated May 25, 1994; 50–295/94021 and 50–304/94021, dated December 12, 1994. Accordingly, there is no reason to expect that implementation of the revised security plan at the Zion facility will result in inconsistencies in plant defense or adverse effects on plant physical protection and safety.

The October 7, 1994, revision to the security plan provided for an improved selection process that would result in the most qualified personnel performing armed responder duties. The revised selection criteria are higher objective standards for proficiency in firearms, physical agility, and knowledge of the security plan. It is ComEd's plan that security guards who cannot meet the new criteria to be an RTM member will be reassigned to the administrative duties of watchmen. Although such a

reassignment could conceivably cause morale problems and turnover for such individuals, use of a process reasonably designed to select the guards who are best qualified for armed response personnel duties is in the best interest of the common defense and security and the public health and safety.

In view of the above, the Petitioners have not raised a substantial safety concern regarding security force morale or inconsistencies in plant security.

C. Monetary Considerations and Administrative Jobs

Petitioners assert that monetary considerations should not take priority over plant defense and administrative jobs should not replace frontline security guards.

Regardless of any anticipated Licensee savings or increased expenses that might be associated with the October 7, 1994, revision to the Licensee's security plan, the NRC staff must review the revised plan for compliance with 10 C.F.R. 73.55. In particular, the NRC staff considered whether the Licensee's on-site physical protection system and security organization include the capabilities to meet the requirements of 10 C.F.R. 73.55(b) through (h). As explained in Section III.A above, the NRC staff concluded that the October 7, 1994, security plan revision to reduce the number of guards does not violate 10 C.F.R. 73.55. Moreover, after review of the October 7, 1994, revisions to the security plan, the NRC staff found that the revisions are acceptable and would not decrease the effectiveness of the security plan.

For the reasons stated above, Petitioners have not raised a substantial safety concern regarding the reduction in the number of guards at the Zion facility.

D. Disarming of Owner Controlled and Protected Areas

Petitioners assert that the total disarming of the owner controlled area and the protected area is highly detrimental to plant defense and public safety.

Contrary to Petitioners' assertions, the Zion facility has not been totally disarmed. As explained above, at Section II.A., the Zion security plan meets NRC requirements for armed personnel. The Commission's regulations do not require any guards in the owner controlled area. Security of the station is centered around protecting selected vital equipment situated within the protected area. *See* 10 C.F.R. 73.55.

Prior to initial plant licensing, the NRC staff evaluated the Licensee's security plan to ensure that it met the general performance objective and requirements of 10 C.F.R. 73.55(a) and that it implemented the more prescriptive requirements of 10 C.F.R. 73.55 (b) through (h). In addition, the NRC staff observed drills to ensure that the Licensee could effectively implement its security plan; in particular, to ensure that the security force could successfully perform the requirements of 10 C.F.R. 73.55(h)(4), which are to determine the existence of a threat, assess the extent of the threat, take immediate concurrent measures to neutralize the threat by requiring responding guards to interpose themselves between vital areas and any adversary attempting entry for the purpose of radiological sabotage and inform local law enforcement agencies of the threat and request assistance. When a licensee submits a revision to its security plan, the NRC staff evaluates it to ensure the same general performance objective and requirements of 10 C.F.R. 73.55(a) and the more prescriptive requirements of 10 C.F.R. 73.55 (b) through (h) are being met and implemented. Periodically, the NRC staff also continues to observe tactical response drills to ensure that the licensee remains capable of effectively implementing its security plan by demonstrating threat response as required by 10 C.F.R. 73.55(h)(4).

The staff evaluated the Licenee's October 7, 1994, revision to the physical security plan and found that it met the requirements of 10 C.F.R. 73.55. Although Zion has not implemented the new RTM plan, an NRC inspection at LaSalle County Station (which has implemented the new RTM plan) in July 1994 did not find any inconsistencies in plant defense or adverse impacts on plant physical protection and safety.

Based on the above, the Petitioners have not raised a substantial safety concern regarding security of the owner controlled areas and the protected area.

E. Potential Threats

Petitioners assert that modern armaments and increase hostility among the general public as well as potential terrorist threats from either domestic and/or international sources have not abated.

NRC regulations establish a framework for security plans with respect to such matters as terrorist attacks against licensed nuclear power plants. 10 C.F.R. part 73. As explained above, although the October 7, 1994, revision to the Zion security plan will result in a reduced number of armed guards, the number of armed response personnel will not decline and the Licensee continues to meet the specific requirements of 10 C.F.R. 73.55(h)(3) with respect to the number of armed response personnel. In addition, NRC regulations require that in designing safeguards systems, licensees shall use the design basis threats contained in the regulations, including those for the type of radiological sabotage referred to by Petitioners. 10 C.F.R. 73.1(a)(1). On a daily basis, the staff threat-related information to ensure the design basis threat statements in the regulations remain a valid basis for safeguards system design. On a semi-annual basis, the results of this staff review are formally documented and forwarded to the Commission. To date, no credible threat to licensed facilities has been identified that would warrant a modification to the design basis threat statements in the regulations. After review of the October 7, 1994, revision to the Zion facility security plan, the NRC staff concludes that the revised security plan does not decrease the effectiveness of the plan in protecting the facility against design basis threats and that the revised plan meets the requirements of 10 C.F.R. part 73.

In view of the above, the Petitioners have not raised a substantial safety concern regarding sabotage or theft of special nuclear material at the Zion facility.

F. Manning and Positioning of Armed Guards

Petitioners asked that both manning and positioning of armed guards be reconsidered and increased back to a more sound defense posture.

Specifically, Petitioners state in their February 28, 1995, supplemental letter that, in regard to the protected area, mobile patrols, armed posts and armed positions have been reduced, and that there should be at least one continuous armed mobile patrol. Petitioners also state, with regard to the owner controlled area, that at least one patrol should be made each 24 hours, and that a minimum of five armed guards per unit and two armed guards dedicated to the main gate are necessary, but that ten armed guards per unit (consisting of two protected area patrols and/or sector guards) is optimum. Additionally, Petitioners state that there is a post for unarmed personnel in the vehicle search area, although the NRC has directed that at least one armed officer be present at an alternate gate entry.

There is no regulatory requirement to have (1) an armed guard at an entry gate to the protected area, (2) any security activities in the owner controlled area outside the protected area, or (3) mobile patrols in the protected area. While

checking the protected area is required, 10 C.F.R. 73.55(c)(4), the type of personnel and patrol frequency are not specified in the regulations, but are detailed in the site physical security plan. All changes to the Zion plan are reviewed against the requirements of the regulations and site specific needs. The NRC inspects against the commitments contained in the approved plan to verify that the plan remains effective and that the Licensee continues to fulfill its commitments. Based on NRC staff review of the Zion security plan and its associated revisions, and upon onsite verification of Zion's commitments, Zion continues to meet the performance objectives of 10 C.F.R. 73.55(a) and its commitments under its security plan.

As explained above, although the October 7, 1994, revision to the Zion security plan will result in a reduced number of armed guards, the number of armed response personnel will not decline and the Licensee continues to meet the specific requirements of 10 C.F.R. 73.55(h)(3) with respect to the number of armed response personnel. In regard to the positioning of armed response personnel, NRC regulations require that licensees establish a safeguards contingency plan which requires armed response personnel to interpose themselves between vital areas and material access areas such that armed response personnel can prevent entry for the purpose of radiological sabotage. 10 C.F.R. 73.55(h)(4)(iii)(A). If revisions to a licensee's security plan meet the requirements of 10 C.F.R. 73.55, the NRC staff concludes that the revisions are consistent with 10 C.F.R. 50.54(p) and that they will not decrease the effectiveness of the safeguards plan. In this case, the NRC staff concluded that the October 7, 1994, revision to the Zion security plan met the requirements of 10 C.F.R. 73.55 and did not result in decreased effectiveness of the plan.

In view of the above, the Petitioners have not raised a substantial safety concern regarding manning and positioning of armed guards at Zion Station.

G. Additional Concern Noted on a Copy of the Petition Sent to Senator Simon

Petitioners appended an additional concern that low level waste is now being stored in the owner controlled area with no security patrols except a casual tour once per eight hour shift, on a copy of the Petition addressed to United States Senator Paul Simon of Illinois. Senator Simon referred the concern to the DOE, and DOE subsequently forwarded it to the NRC. Petitioners' supplemental letter of February 28, 1995, asserts that the interim radwaste storage facility is worthy of one full 24-hour patrol and alarmed, continuous surveillance equipment, such as a camera.

Storage and control of NRC-licensed material are governed, in pertinent part, by 10 CFR 20.1801 of Subpart I to 10 CFR part 20, which requires licensees to secure from unauthorized removal or unauthorized access licensed materials that are stored in controlled or unrestricted areas. The security requirements of 10 CFR part 73 do not apply to the storage of low level waste. Zion Station maintains an interim radwaste storage facility (IRSF) for licensed material on-site, within the owner controlled area to which general access is not permitted. The IRSF is locked, key access is controlled, and once in each 8 hour shift the IRSF is patrolled by a security officer. The staff finds that the IRSF at the Zion facility is in compliance with 10 CFR 20.1801.

For the reasons stated above, Petitioners have not raised a substantial safety concern regarding security of low level waste in the owner controlled area at the Zion facility.

IV. Conclusion

The institution of a proceeding in response to a request for action under 10 CFR 2.206 is appropriate only when substantial health and safety issues have been raised. See *Consolidated Edison Co. of New York* (Indian Point, Units 1, 2, and 3), CLI–75–8, 2 NRC 173, 176 (1975), and *Washington Public Power Supply System* (WPPSS Nuclear Project No. 2), DD–84–7, 19 NRC 899, 923 (1984). I have applied this standard to determine what action, if any, is warranted in response to the matters raised by Petitioners. Each of the claims or allegations by Petitioners has been reviewed, and I conclude that, for the reasons discussed above, Petitioners have raised no substantial safety concern regarding the revised security plan for the Zion facility. Petitioners' requests that the NRC withdraw its approval of the changes to the security plan and that the NRC require an increase in the number of, or a change in the positioning of, armed guards at the Zion Nuclear Power Station, are denied. Petitioners' request that the NRC demand greater justification for the proposal to reduce the number of armed guards and the defense of the Zion Nuclear Power Station is denied. Since the NRC has agreed with the Licensee that the changes to Zion's security plan do not decrease the effectiveness of the plan, per 10 CFR 50.54(p), NRC approval to implement the changes to Zion's security plan is not required.

A copy of this Decision will be filed with the Secretary of the Commission for the Commission to review in accordance with 10 CFR 2.206(c). As provided by Section 2.206(c), this Decision will constitute the final action of the Commission 25 days after issuance, unless the Commission, on its own motion, institutes a review of the decision within that time.

Dated at Rockville, Maryland, this 26th day of May 1995.

For the Nuclear Regulatory Commission.

William T. Russell,

Director, Office of Nuclear Reactor Regulation.

[FR Doc. 95–13501 Filed 6–1–95; 8:45 am]

BILLING CODE 7590–01–M

[Docket No. 50–341]

Detroit Edison Company; Notice of Partial Denial of Amendment to Facility Operating License and Opportunity for Hearing

The U.S. Nuclear Regulatory Commission (the Commission) has partially denied a request by Detroit Edison Company (licensee) for an amendment to Facility Operating License No. NPF–43 issued to the licensee for operation of Fermi 2, located in Frenchtown Township, Monroe County, Michigan. Notice of Consideration of Issuance of this amendment was published in the **Federal Register** on April 12, 1995 (60 FR 18625).

The licensee's proposed amendment request revised the Technical Specifications (TS) to relocate the audit frequencies in TS 6.5.2.8 to the Quality Assurance Program (QAP) in Chapter 17.2 of the Updated Final Safety Analysis Report. The licensee also proposed to extend the frequency for use of an independent fire protection contractor from once every 3 years to once every third fire protection audit. The licensee submitted corresponding changes to the QAP in accordance with 10 CFR 50.54(a) to Region III for review which also reduced some audit frequencies. The region approved the relocation of and reductions in the audit frequencies but did not approve the requested change on independent contractor use for fire protection audits. Therefore, this proposed change to the TS was also denied.

The NRC staff has concluded that the licensee's request cannot be fully granted. The licensee was notified of the Commission's denial of the proposed change by a letter dated May 23, 1995.

By July 3, 1995, the licensee may demand a hearing with respect to the

denial described above. Any person whose interest may be affected by this proceeding may file a written petition for leave to intervene.

A request for hearing or petition for leave to intervene must be filed with the Secretary of the Commission, U.S. Nuclear Regulatory Commission, Washington, DC 20555, Attention: Docketing and Services Branch, or may be delivered to the Commission's Public Document Room, the Gelman Building, 2120 L Street, NW., Washington, DC by the above date.

A copy of any petitions should also be sent to the Office of the General Counsel, U.S. Nuclear Regulatory Commission, Washington, DC 20555, and to John Flynn, Esq., Detroit Edison Company, 2000 Second Avenue, Detroit, Michigan 48266, attorney for the licensee.

For further details with respect to this action, see (1) the application for amendment dated September 13, 1993, as supplemented July 26, 1994, and (2) the Commission's letter to the licensee dated May 23, 1995.

These documents are available for public inspection at the Commission's Public Document Room, the Gelman Building, 2120 L Street, NW., Washington, DC, and at the Monroe County Library System, 3700 South Custer Road, Monroe, Michigan 48160. A copy of item (2) may be obtained upon written request addressed to the U.S. Nuclear Regulatory Commission, Washington, DC 20555, Attention: Document Control Desk.

Dated at Rockville, Maryland, this 23rd day of May 1995.

For the Nuclear Regulatory Commission.

Timothy G. Colburn, Sr.,

Project Manager, Project Directorate III–I, Division of Reactor Projects—III/IV, Office of Nuclear Reactor Regulation.

[FR Doc. 95–13500 Filed 6–1–95; 8:45 am]

BILLING CODE 7590–01–M

SECURITIES AND EXCHANGE COMMISSION

[Release No. 34–35774; File No. SR–NASD–95–24]

Self-Regulatory Organizations; National Association of Securities Dealers, Inc.; Notice of Filing of Proposed Rule Change Regarding Depository Eligibility Requirements

May 26, 1995.

Pursuant to section 19(b)(1) of the Securities Exchange Act of 1934 (''Act''),[1] notice is hereby given that on May 19, 1995, the National Association of Securities Dealers, Inc. (''NASD'') filed with the Securities and Exchange Commission (''Commission'') the proposed rule change as described in Items I, II, and III below, which items have been prepared primarily by the NASD. The Commission is publishing this notice to solicit comments from interested persons.

I. Self-Regulatory Organization's Statement of the Terms of Substance of the Proposed Rule Change

The NASD proposes to amend Part II, Section 1(c) of Schedule D to the NASD By-laws (''By-laws'') to establish depository eligibility requirements for issuers that desire to have their securities included in the Nasdaq Stock Market (''Nasdaq'').

II. Self-Regulatory Organization's Statement of the Purpose of, and Statutory Basis for, the Proposed Rule Change

In its filing with the Commission, the NASD included statements concerning the purpose of and basis for the proposed rule change and discussed any comments it received on the proposed rule change. The text of these statements may be examined at the places specified in Item IV below. The self-regulatory organization has prepared summaries, set forth in sections (A), (B), and (C) below, of the most significant aspects of such statements.[2]

(A) Self-Regulatory Organization's Statement of the Purpose of, and Statutory Basis for, the Proposed Rule Change

Under the proposed rule change, the NASD will adopt a uniform depository eligibility rule for issuers that desire to have their securities eligible for inclusion in Nasdaq. The uniform rule has been developed by the Legal and Regulatory Subgroup of the U.S. Working Committee of the Group of Thirty in coordination with each of the national securities exchanges and the NASD. It is anticipated that each national securities exchange in addition to the NASD will file rule changes proposing adoption of depository eligibility standards substantially similar to the NASD's proposed rule[3] and will seek to make such changes effective contemporaneously with the effective date of the transition from a five-day (''T+5'') to a three-day (''T+3'') settlement cycle. The transition is set to occur June 7, 1995.[4]

The proposed rule change will require that before any issue of securities of a domestic issuer (excluding securities of a Canadian issuer) is eligible for inclusion in Nasdaq, such issue of securities must have a CUSIP number that is included in the file of eligible issues maintained by a securities depository registered as a clearing agency under Section 17A of the Securities Exchange Act of 1934.[5]

While the NASD believes that depository eligibility should be universal and that few exemptions be granted, the proposed rule change will not apply to a security if the terms of such security cannot be reasonably modified to meet the criteria for depository eligibility at all securities depositories. The exemption authority is intended to address the situation where a Nasdaq company issues short-term warrants and other similar short-term securities that are not generally depository eligible. The NASD does not believe that the issuers of such securities should be required to obtain individual exceptions from the proposed new listing requirement in order to permit those securities to be listed during their short life span. However, an exemption is not intended to be available in instances where the issuer could meet the depository eligibility requirements but chooses not to do so or has not left enough time prior to the offering to do so.

The proposed rule change sets forth additional requirements that must be met before a security will be deemed to be ''depository eligible,'' as such term is used in Part II, Section 1(c) of Schedule D to the By-laws and Section 11 of the NASD Uniform Practice Code (''UPC'').[6] The proposed rule specifies different requirements for depository eligibility depending upon whether a new issue is distributed by an underwriting syndicate before or after the date a securities depository system is available for monitoring repurchases of the

[1] 15 U.S.C. 78s(b)(1) (1988).

[2] The Commission has modified the language in these sections.

[3] In addition to the listing requirement contained in Schedule D to the By-laws, the NASD is proposing to amend the definition of ''depository eligibility'' contained in its book-entry settlement rule contained in Section 11 of the NASD Uniform Practice Code consistent with the amendment to Schedule D. Section 11 must be amended because the NASD's depository settlement rule applies to all NASD members regardless of where the securities are listed. In comparison, the depository settlement rule of the exchanges only applies to transactions in the securities listed on the exchange.

[4] Securities Exchange Act Release Nos. 33023 (October 6, 1993), 58 FR 52891 (adoption of Rule 15c6–1) and 34952 (November 9, 1994), 59 FR 59137 (change of effective date of Rule 15c6–1 from June 1, 1995 to June 7, 1995).

[5] U.S.C 78q–1 (1988).

[6] Pursuant to section 11 of the UPC, trades by a member in depository eligible securities generally must be settled by book-entry through a securities depository.

distributed shares by syndicate members (''flipping tracking system'').

Currently, a flipping tracking system is being developed that will include a securities depository service that (i) can be activated upon the request of the managing underwriter for a period of time that the managing underwriter specifies, (ii) in certain circumstances, will require the delivering participant to provide to the depository information sufficient to identify the seller of such shares as a precondition to the processing of book-entry delivery instructions for distributed shares, and (iii) will report to the managing underwriter the identity of any other syndicate member or selling group member whose customer(s) sold distributed shares (but will not report to the managing underwriter the identity of such customer[s]), and in certain circumstances, will report to such syndicate member or selling group member the identity of such customer(s). Prior to the availability of a flipping tracking system, the managing underwriter may delay the date a security is deemed ''depository eligible'' for up to three months after trading has commenced in the security. After the availability of a flipping tracking system, a new issue will be deemed to be depository eligible upon commencement of trading on Nasdaq.

The NASD believes that the proposed rule change is consistent with the provisions of section 15A(b)(6) of the Act[7] in that the proposed rule change is designed to encourage book-entry settlement of transactions by requiring that securities included in Nasdaq and listed on the national securities exchanges be depository eligible thereby reducing the risks to the financial markets and investors associated with physical delivery, clearance, and settlement of securities transactions.

(B) Self-Regulatory Organization's Statement on Burden on Competition

The NASD does not believe that the proposed rule change will result in any burden on competition that is not necessary or appropriate in furtherance of the purposes of the Act.

(C) Self-Regulatory Organization's Statement on Comments on the Proposed Rule Change Received From Members, Participants or Others

Written comments were neither solicited nor received.

[7] 15 U.S.C. 78f(b)(5) (1988).

III. Date of Effectiveness of the Proposed Rule Change and Timing for Commission Action

Within thirty-five days of the date of publication of this notice in the **Federal Register** or within such longer period (i) as the Commission may designate up to ninety days of such date if it finds such longer period to be appropriate and publishes its reasons for so finding or (ii) as to which the NASD consents, the Commission will:

(a) By order approve such proposed rule change or

(b) Institute proceedings to determine whether the proposed rule change should be disapproved.

The NASD has requested accelerated approval of the proposed rule change in order that the rule can become effective on June 7, 1995.[8]

IV. Solicitation of Comments

Interested persons are invited to submit written data, views, and arguments concerning the foregoing. Persons making written submission should file six copies thereof with the Secretary, Securities and Exchange Commission, 450 Fifth Street, NW., Washington, DC 20549. Copies of the submissions, all subsequent amendments, all written statements with respect to the proposed rule change that are filed with the Commission, and all written communications relating to the proposed rule change between the Commission and any person, other than those that may be withheld from the public in accordance with the provisions of 5 U.S.C. 552, will be available for inspection and copying in the Commission's Public Reference Room, 450 Fifth Street, NW., Washington, DC 20549. Copies of such filings will also be available for inspection and copying at the principal office of the NASD. All submissions should refer to the file number SR–NASD–95–24 and should be submitted by June 23, 1995.

For the Commission by the Division of Market Regulation, pursuant to delegated authority.[9]

Margaret H. McFarland,

Deputy Secretary.

[FR Doc. 95–13532 Filed 6–1–95; 8:45 am]

BILLING CODE 8010–01–M

[8] *Supra* note 4 and accompanying text.

[9] 17 CFR 200.30–3(a)(12) (1994).

[Release No. 34–35769; File No. SR–NASD–95–11]

Self-Regulatory Organizations; the National Association of Securities Dealers, Inc.; Order Granting Accelerated Approval of Proposed Rule Change Relating to Requiring the Use of the Facilities of a Registered Clearing Agency for the Clearance of Transactions in Corporate Debt Securities

May 25, 1995.

On April 10, 1995, the National Association of Securities Dealers, Inc. (''NASD'') filed a proposed rule change (File No. SR–NASD–95–11) with the Securities and Exchange Commission (''Commission'') pursuant to Section 19(b) of the Securities Exchange Act of 1934 (''Act'').[1] Notice of the proposal was published in the **Federal Register** on May 1, 1995, to solicit comments from interested persons.[2] No comments were received. As discussed below, the Commission is approving the proposed rule change on an accelerated basis.

I. Description

The NASD is amending its Uniform Practice Code (''UPC'') to include a new Section 72 that requires each NASD member or its agent that is a participant in a registered clearing agency to use the facilities of a clearing agency to clear eligible transactions in corporate debt securities. Section 72 also provides that the NASD may exempt any transaction or class of transactions in corporate debt securities from the provisions of the rule as may be necessary to accommodate special circumstances related to the clearance of such transactions or class of transactions.[3]

According to the NASD, approximately thirty percent of all transactions in corporate bonds are being compared, cleared, and settled without using the facilities of a registered clearing agency (*i.e.*, settled broker-to-broker or ex-clearing). Clearing such transactions broker-to-

[1] 15 U.S.C. 78s(b) (1988).

[2] Securities Exchange Act Release No. 35642 (April 24, 1995), 60 FR 21226.

[3] The NASD anticipates that this provision will be used only in the event special pricing and processing problems related to particular corporate debt securities make using the facilities of a registered clearing agency difficult or impossible and when these problems outweigh the benefits of using the facilities of a registered clearing agency. For example, the NASD considered mandating the use of the facilities of a registered clearing agency for other types of securities, such as unit investment trusts, private label collateralized mortgage obligations, synthetic stripped coupons and government securities, but concluded that it would be inadvisable to adopt such a mandate until the special pricing and processing requirements for these securities is fully understood and resolved.

broker is labor intensive, requires more time to complete, and results in more fails than transactions processed through a registered clearing agency. The labor intensive nature of broker-to-broker processing may introduce errors into the process from keystroke errors, manually handling documents, delivery errors, and payment errors. Further, the increase in the number of failed trades and the corresponding increase in potential financial exposure to members creates systemic clearance risk.

II. Discussion

Section 15A(b)(6) of the Act [4] requires that the rules of the NASD be designed to perfect the mechanism of a national market system, and, in general, to protect investors and the public interest. By requiring its members to clear transactions in corporate debt securities through the facilities of a registered clearing agency, the proposed rule change should reduce the number of failed trades and should reduce or eliminate the risks and inefficiencies associated with broker-to-broker clearance and settlement of such transactions which should further the goal of a national market system. As a result of the rule, more trades will have the benefit of a clearing agency's guarantee of trade settlement and risk and thereby enhance investor protection.

Furthermore, the move to three day settlement of securities transactions on June 7, 1995, will reduce the time available to complete all tasks necessary to settle a transaction.[5] By increasing the number of transactions that must be settled through the facilities of a registered clearing agency, the rule also facilitates the implementation of a three day settlement.

The NASD has requested that the Commission find good cause for approving the proposed rule change prior to the thirtieth day after the date of publication of notice of the filing. The Commission finds good cause for so approving the proposed rule because accelerated approval will permit the NASD to notify their members two weeks before the effective date of the rule. Such notification should help the NASD and its members to implement the rule in an orderly manner while still permitting the rule to become effective shortly after the implementation of T+3 settlement, which is scheduled to occur on June 7, 1995.

[4] 15 U.S.C. 78*o*–3(b)(6) (1988).

[5] Securities Exchange Act Release Nos. 33023 (October 6, 1993), 58 FR 52891 (adopting Rule 15c6–1) and 34952 (November 9, 1994), 59 FR 59137 (changing effective date from June 1, 1995, to June 7, 1995).

III. Conclusion

For the reasons stated above, the Commission finds that NASD's proposal is consistent with Section 15A of the Act.[6]

It is therefore ordered, pursuant to Section 19(b)(2) of the Act,[7] that the proposed rule change (File No. SR–NASD–95–11) be and hereby is approved, effective June 30, 1995.

For the Commission by the Division of Market Regulation, pursuant to delegated authority.[8]

Margaret H. McFarland,

Deputy Secretary.

[FR Doc. 95–13466 Filed 6–1–95; 8:45 am]

BILLING CODE 8010–01–M

[6] 15 U.S.C. 78*o*–3 (1988).

[7] 15 U.S.C. 78s(b)(2) (1988).

[8] 17 CFR 200.30(a)(12) (1994).

Under Review by Office of Management and Budget

Agency Clearance Officer: Michael E. Bartell, (202) 942–8800

Upon Written Request, Copy Available From: Securities and Exchange Commission, Office of Filings and Information Services, Washington, DC 20549

Extension:

Rule 23c–3, File No. 270–373

Notice is hereby given that pursuant to the Paperwork Reduction Act of 1980 (44 U.S.C. 3501 *et seq.*), the Securities and Exchange Commission (the ''SEC'') has submitted for extension of OMB approval Rule 23c–3 under the Investment Company Act of 1940 [17 CFR 270.23c–3].

Rule 23c–3 permits closed-end management investment companies to make periodic repurchase offers to shareholders at net asset value. These repurchases are exempt from the disclosure and filing requirements of the tender offer rules under the Securities Exchange Act of 1934. Rule 23c–3 requires closed-end funds making repurchase offers to give shareholders before each offer a notification containing specified information, to file three copies of the notification with the Commission, to describe the fund's repurchase policy and the results of recent repurchase offers in the annual report to shareholders, and to cause fund directors to adopt and maintain written procedures designed to preserve a sufficiently liquid investment portfolio. An estimated 10 respondents together incur 320 burden hours annually to comply with the requirements, under new estimates reflecting a program change and an adjustment.

In addition, closed-end funds relying on the rule must file copies of advertisements and other sales literature with the Commission unless already filed with the National Association of Securities Dealers (NASD). Respondents generally incur no burden hours to comply with this requirement because each fund's principal underwriter must comply with separate NASD rules requiring the filing of such materials with the NASD.

Direct general comments to the OMB Clearance Officer for the Securities and Exchange Commission at the address below. Direct any comments concerning the accuracy of the estimated average burden hours for compliance with SEC rules or forms to Michael E. Bartell, Associate Executive Director, Office of Information Technology, Securities and Exchange Commission, 450 Fifth Street, NW., Washington, DC 20549 and to OMB Clearance Officer for the Securities and Exchange Commission, Office of Information and Regulatory Affairs, Paperwork Reduction Act Number 3235–0422, Office of Management and Budget, Room 3208, New Executive Office Building, Washington, DC 20543.

Dated: May 22, 1995.

Margaret H. McFarland,

Deputy Secretary.

[FR Doc. 95–13535 Filed 6–1–95; 8:45 am]

BILLING CODE 8010–01–M

[Release No. 34–35772; File No. SR–PHLX–95–34]

Self-Regulatory Organizations; Philadelphia Stock Exchange, Inc.; Notice of Filing of Proposed Rule Change Regarding Depository Eligibility Requirements

May 26, 1995.

Pursuant to section 19(b)(1) of the Securities Exchange Act of 1934 (''Act''),[1] notice is hereby given that on May 19, 1995, the Philadelphia Stock Exchange, Inc. (''PHLX'') filed with the Securities and Exchange Commission (''Commission'') the proposed rule change as described in Items I, II, and III below, which items have been prepared primarily by PHLX. On May 18, 1995, PHLX filed an amendment to the rule filing.[2] The Commission is publishing this notice to solicit comments from interested persons.

[1] 15 U.S.C. 78s(b)(1) (1988).

[2] Letter from Sharon S. Metzger, PHLX, to Christine Sibille, Senior Counsel, Division of Market Regulation, Commission (May 18, 1995).

I. Self-Regulatory Organization's Statement of the Terms of Substance of the Proposed Rule Change

PHLX proposes to adopt a new Rule 853 which will set forth depository eligibility requirements for issuers that apply to list their securities on PHLX.

II. Self-Regulatory Organization's Statement of the Purpose of, and Statutory Basis for, the Proposed Rule Change

In its filing with the Commission, PHLX included statements concerning the purpose of and basis for the proposed rule change and discussed any comments it received on the proposed rule change. The text of these statements may be examined at the places specified in Item IV below. The self-regulatory organization has prepared summaries, set forth in sections (A), (B), and (C) below, of the most significant aspects of such statements.[3]

(A) Self-Regulatory Organization's Statement of the Purpose of, and Statutory Basis for, the Proposed Rule Change

Under the proposed rule change, PHLX will adopt a uniform depository eligibility rule for issuers that desire to list their securities on PHLX.[4] The uniform rule has been developed by the Legal and Regulatory Subgroup of the U.S. Working Committee of the Group of Thirty in coordination with each of the national securities exchanges and the National Association of Securities Dealers (''NASD''). It is anticipated that each national securities exchange and the NASD will file rule changes proposing adoption of depository eligibility standards substantially similar to PHLX's proposed rule and will seek to make such changes effective contemporaneously with the effective date of the transition from a five day (''T+5'') to a three day (''T+3'') settlement cycle. The transition is set to occur June 7, 1995.[5]

The proposed rule change will require issuers to ensure that securities to be listed on PHLX have been included in the file of eligible issues maintained by a securities depository registered as a clearing agency under section 17A of the Act.[6] This requirement will not apply to a security if the terms of such security cannot be reasonably modified to meet the criteria for depository eligibility at all securities depositories.

The proposed rule change sets forth additional requirements that must be met before a security will be deemed to be ''depository eligible,'' within the meaning of PHLX Rule 279 (''uniform book-entry settlement rule'').[7] The proposed rule specifies different requirements for depository eligibility depending upon whether a new issue is distributed by an underwriting syndicate before or after the date a securities depository system is available for monitoring repurchases of the distributed shares by syndicate members (''flipping tracking system'').

Currently, a flipping tracking system is being developed that will include a securities depository service that (i) can be activated upon the request of the managing underwriter for a period of time that the managing underwriter specifies, (ii) in certain circumstances, will require the delivering participant to provide to the depository information sufficient to identify the seller of such shares as a precondition to the processing of book-entry delivery instructions for distributed shares, and (iii) will report to the managing underwriter the identity of any other syndicate member or selling group member whose customer(s) sold distributed shares (but will not report to the managing underwriter the identity of such customer[s]), and in certain circumstances, will report to such syndicate member or selling group member the identity of such customer(s). Prior to the availability of a flipping tracking system, the managing underwriter may delay the date a security is deemed ''depository eligible'' for up to three months after trading has commenced in the security. After the availability of a flipping tracking system, a new issue will be deemed to be depository eligible upon commencement of trading on PHLX.

The proposed rule change is consistent with section 6(b)(5) of the Act[8] in that it is designed to promote just and equitable principles of trade.

(B) Self-Regulatory Organization's Statement on Burden on Competition

PHLX believes that no burden will be placed on competition as a result of the proposed rule change.

(C) Self-Regulatory Organization's Statement on Comments on the Proposed Rule Change Received From Members, Participants or Others

Comments on the proposed rule change were neither solicited nor received.

III. Date of Effectiveness of the Proposed Rule Change and Timing for Commission Action

Within thirty-five days of the date of publication of this notice in the **Federal Register** or within such longer period (i) as the Commission may designate up to ninety days of such date if it finds such longer period to be appropriate and publishes its reasons for so finding or (ii) as to which PHLX consents, the Commission will:

(a) By order approve such proposed rule change or

(b) Institute proceedings to determine whether the proposed rule change should be disapproved.

PHLX has requested accelerated approval of the proposed rule change in order that the rule can become effective on June 7, 1995.[9]

IV. Solicitation of Comments

Interested persons are invited to submit written data, views, and arguments concerning the foregoing. Persons making written submission should file six copies thereof with the Secretary, Securities and Exchange Commission, 450 Fifth Street, NW., Washington DC 20549. Copies of the submissions, all subsequent amendments, all written statements with respect to the proposed rule change that are filed with the Commission, and all written communications relating to the proposed rule change between the Commission and any person, other than those that may be withheld from the public in accordance with the provisions of 5 U.S.C. 552, will be available for inspection and copying in the Commission's Public Reference Section, 450 Fifth Street, NW., Washington, DC 20549. Copies of such filings will also be available for inspection and copying at the principal office of PHLX. All submissions should refer to file number SR–PHLX–95–34 and should be submitted by June 23, 1995.

For the Commission by the Division of Market Regulation, pursuant to delegated authority.[10]

---

[3] The Commission has modified the language in these sections.

[4] In addition, PHLX Rules 803 and 805 will be amended to properly cross-reference to new Rule 853.

[5] Securities Exchange Act Release Nos. 33023 (October 6, 1993), 58 FR 52891 (adoption of Rule 15c6–1) and 34952 (November 9, 1994), 59 FR 59137 (change of effective date of Rule 15c6–1 from June 1, 1995 to June 7, 1995).

[6] 15 U.S.C. 78q–1 (1988).

[7] Pursuant to PHLX's uniform book-entry settlement rule, trades by a member in depository eligible securities generally must be settled by book-entry through a securities depository.

[8] 15 U.S.C. 78f(b)(5) (1988).

[9] *Supra* note 5 and accompanying text.

[10] 17 CFR 200.30–3(a)(12) (1994).

Margaret H. McFarland,

Deputy Secretary.

[FR Doc. 95–13533 Filed 6–1–95; 8:45 am]

BILLING CODE 8010–01–M

[Release No. 34–35773; File No. SR–NYSE–95–19]

Self-Regulatory Organizations; New York Stock Exchange, Inc., Notice of Filing of Proposed Rule Change Regarding Depository Eligibility Requirements

May 26, 1995.

Pursuant to Section 19(b)(1) of the Securities Exchange Act of 1934 (''Act''),[1] notice is hereby given that on May 16, 1995, the New York Stock Exchange, Inc. (''NYSE'') filed with the Securities and Exchange Commission (''Commission'') the proposed rule change as described in Items I, II, and III below, which items have been prepared primarily by NYSE. The Commission is publishing this notice to solicit comments from interested persons.

I. Self-Regulatory Organization's Statement of the Terms of Substance of the Proposed Rule Change

NYSE proposes to adopt a new Rule 227 which will set forth depository eligibility requirements for issuers that apply to list their securities on NYSE.

II. Self-Regulatory Organization's Statement of the Purpose of, and Statutory Basis for, the Proposed Rule Change

In its filing with the Commission, the self-regulatory organization included statements concerning the purpose of and basis for the proposed rule change and discussed any comments it received on the proposed rule change. The text of these statements may be examined at the places specified in Item IV below. The self-regulatory organization has prepared summaries, set forth in sections (A), (B), and (C) below, of the most significant aspects of such statements.[2]

(A) Self-Regulatory Organization's Statement of the Purpose of, and Statutory Basis for, the Proposed Rule Change

Under the proposed rule change, NYSE will adopt a uniform depository eligibility rule, proposed new Rule 227, for issuers that desire to list their securities on NYSE. The uniform rule has been developed by the Legal and Regulatory Subgroup of the U.S. Working Committee of the Group of Thirty in coordination with each of the national securities exchanges and the National Association of Securities Dealers (''NASD''). It is anticipated that each national securities exchange and the NASD will file rule changes proposing adoption of depository eligibility standards substantially similar to NYSE's proposed rule and will seek to make such changes effective contemporaneously with the effective date of the transition from a five-day (''T+5'') to a three-day (''T+3'') settlement cycle. The transition is set to occur June 7, 1995.[3]

The proposed rule change will require domestic issuers to represent to the NYSE before issues of securities are listed that the CUSIP numbers identifying the securities have been included in the file of eligible issues maintained by a securities depository registered as a clearing agency under section 17A of the Act.[4] This requirement will not apply to a security if the terms of such security cannot be reasonably modified to meet the criteria for depository eligibility at all securities depositories.

The proposed rule change sets forth additional requirements that must be met before a security will be deemed to be ''depository eligible,'' as such term is used in Rule 226 of the NYSE rules.[5] The proposed rule specifies different requirements for depository eligibility depending upon whether a new issue is distributed by an underwriting syndicate before or after the date a securities depository system is available for monitoring repurchases of the distributed shares by syndicate members (''flipping tracking system'').

Currently, a flipping tracking system is being developed that will include a securities depository service that (i) can be activated upon the request of the managing underwriter for a period of time that the managing underwriter specifies, (ii) in certain circumstances, will require the delivering participant to provide to the depository information sufficient to identify the seller of such shares as a precondition to the processing of book-entry delivery instructions for distributed shares, and (iii) will report to the managing underwriter the identity of any other syndicate member or selling group member whose customer(s) sold distributed shares (but will not report to the managing underwriter the identity of such customer[s]), and in certain circumstances, will report to such syndicate member or selling group member the identity of such customer(s). Prior to the availability of a flipping tracking system, the managing underwriter may delay the date a security is deemed ''depository eligible'' for up to three months after trading has commenced in the security. After the availability of a flipping tracking system, a new issue will be deemed to be depository eligible upon commencement of trading on NYSE.

The proposed rule change is consistent with Section 6(b)(5) of the Act[6] in that it protects investors and the public interest by reducing the risk inherent in settling securities transactions to clearing corporations, their members, and public investors. This is accomplished because the new rule will promote book-entry settlement for the vast majority of initial public offerings and will reduce risk in the U.S. national market system.

(B) Self-Regulatory Organization's Statement on Burden on Competition

NYSE does not believe that the proposed rule change will impose any burden on competition that is not necessary or appropriate in furtherance of the purposes of the Act.

(C) Self-Regulatory Organization's Statement on Comments on the Proposed Rule Change Received From Members, Participants or Others

NYSE has neither solicited nor received comments on the proposed rule change.

III. Date of Effectiveness of the Proposed Rule Change and Timing for Commission Action

Within thirty-five days of the date of publication of this notice in the **Federal Register** or within such longer period (i) as the Commission may designate up to ninety days of such date if it finds such longer period to be appropriate and publishes its reasons for so finding or (ii) as to which NYSE consents, the Commission will:

(a) By order approve such proposed rule change or

---

[1] 15 U.S.C. 78s(b)(1) (1988).

[2] The Commission has modified the language in these sections.

[3] Securities Exchange Act Release Nos. 33023 (October 6, 1993), 58 FR 52891 (adoption of Rule 15c6–1) and 34952 (November 9, 1994), 59 FR 59137 (change of effective date of Rule 15c6–1 from June 1, 1995 to June 7, 1995).

[4] 15 U.S.C. 78q–1 (1988).

[5] The term ''depository eligible securities'' is defined in Rule 226(d) as securities that (i) are part of an issue (securities identified by a single CUSIP number) of securities that is eligible for deposit at a securities depository and (ii) with respect to a particular transaction, are eligible in book-entry transfer at the depository at the time of settlement of the transaction.

[6] 15 U.S.C. 78f(b)(5) (1988).

(b) Institute proceedings to determine whether the proposed rule change should be disapproved.

NYSE has requested accelerated approval of the proposed rule change in order that the rule can become effective on June 7, 1995.[7]

IV. Solicitation of Comments

Interested persons are invited to submit written data, views, and arguments concerning the foregoing. Persons making written submission should file six copies thereof with the Secretary, Securities and Exchange Commission, 450 Fifth Street, NW., Washington, DC 20549. Copies of the submissions, all subsequent amendments, all written statements with respect to the proposed rule change that are filed with the Commission, and all written communications relating to the proposed rule change between the Commission and any person, other than those that may be withheld from the public in accordance with the provisions of 5 U.S.C. 552, will be available for inspection and copying in the Commission's Public Reference Section, 450 5th Street, NW., Washington, DC 20549. Copies of such filings will also be available for inspection and copying at the principal office of NYSE. All submissions should refer to file number SR–NYSE–95–19 and should be submitted by June 23, 1995.

For the Commission by the Division of Market Regulation, pursuant to delegated authority.[8]

Margaret H. McFarland,

Deputy Secretary.

[FR Doc. 95–13534 Filed 6–1–95; 8:45 am]

BILLING CODE 8010–01–M

[Rel. No. IC–21098; 812–6902]

IDS Certificate Company, Notice of application

May 26, 1995.

AGENCY: Securities and Exchange Commission (''SEC'').

ACTION: Notice of Application for Exemption under the Investment Company Act of 1940 (the ''Act'').

APPLICANT: IDS Certificate Company (''IDSC'').

RELEVANT ACT SECTIONS: Order requested under sections 6(c), 28(b), 18(j)(1), and (28(c).

SUMMARY OF APPLICATION: IDSC requests an order under section 28(b) to permit it to hold as ''qualified investments'' those investments permitted under the Minnesota life insurance code (''Minnesota Code'') and to value these investments in accordance with the Minnesota Code; under section 6(c) to adopt a more conservative formula to calculate its minimum reserve requirements; under section 18(j)(1) to engage in certain hedging transactions that are permitted under the Minnesota Code; and under section 28(c) to authorize certain custodial arrangements. The order under section 6(c) would supersede a prior order (the ''Interest Rate Order'') relating to IDSC's reserve calculations.[1] In addition, the order under section 28(c) would amend two prior orders (the ''Custody Orders'') concerning IDSC's custodial arrangements.[2]

FILING DATE: The application was filed on October 15, 1987, and amended on March 30, 1988, March 3, 1989, December 22, 1989, May 24, 1990, August 20, 1990, September 27, 1994, and May 26, 1995.

HEARING OR NOTIFICATION OF HEARING: An order granting the application will be issued unless the SEC orders a hearing. Interested persons may request a hearing by writing to the SEC's Secretary and serving applicant with a copy of the request, personally or by mail. Hearing requests should be received by the SEC by 5:30 p.m. on June 20, 1995, and should be accompanied by proof of service on applicant, in the form of an affidavit or, for lawyers, a certificate of service. Hearing requests should state the nature of the writer's interest, the reason for the request, and the issues contested. Persons who wish to be notified of a hearing may request notification by writing to the SEC's Secretary.

ADDRESSES: Secretary, SEC, 450 5th Street, NW., Washington, DC 20549. Applicant, IDS Tower 10, Minneapolis, Minnesota 55440, Attn: Bruce A. Kohn.

FOR FURTHER INFORMATION CONTACT: Robert A. Robertson, Branch Chief, at (202) 942–0564, or Elizabeth G. Osterman, Assistant Director, at (202) 942–0564 (Division of Investment Management, Office of Investment Company Regulation).

SUPPLEMENTARY INFORMATION: The following is a summary of the application. The complete application may be obtained for a fee for the SEC's Public Reference Branch.

Applicant's Representations

1. IDSC, a registered face-amount certificate company, is a wholly-owned subsidiary of IDS Financial Corporation, a registered broker-dealer and investment adviser. IDSC issues several types of ''face-amount certificates'' with varying terms and maturities. Face-amount certificates are debt obligations of the issuing company. These certificates obligate the issuer to pay a certain amount to the holder thereof upon maturity or to pay a specified surrender value prior to maturity.

2. IDSC is located in Minnesota. A specific statutory mandate subjects IDSC to oversight and periodic inspections by the Minnesota Department of Commerce, which administers the Minnesota Code and also regulates insurance companies. The Department inspects IDSC at least annually, and focuses particularly on portfolio quality and the adequacy of reserves for losses.

A. Qualified Investments

1. As a face-amount certificate company, the Act requires IDSC to hold assets having a value of not less than the aggregate amount of its required paid-in capital and certificate reserves. Section 28(b) provides that these assets must consist of cash or ''qualified investments,'' which are defined as those investments that life insurance companies are permitted to invest in or hold under the Code of the District of Columbia (the ''D.C. Code'') or investments that the SEC may authorized by rule, regulation, or order. In addition, the section provides that these investments must be valued in accordance with the D.C. Code.

2. Investments available in the marketplace have changed substantially since the adoption of the D.C. Code, and applicants believe that the D.C. Code is largely outdated as the last substantive amendments were passed in 1960. Under the D.C. Code, life insurance companies may not invest more than 5% of their assets in investments not expressly permitted by the D.C. Code (the ''5% Limitation'').

3. IDSC requests and order under section 28(b) to permit it to hold as ''qualified investments'' those financial instruments that life insurance companies may hold under the Minnesota Code, as in effect at the time relief is granted. In addition, if the requested relief is granted, these investments will be valued in accordance with the Minnesota Code. The Minnesota Code allows ''financial

---

[7] *Supra* note 3 and accompanying text.

[8] 17 CFR 200.30–3(a)(12) (1994).

[1] *IDS Certificate Company,* Investment Company Act Release Nos. 14981 (Mar. 11, 1986) (notice) and 15045 (Apr. 7, 1986) (order).

[2] *IDS Certificate Company,* Investment Company Act Release Nos. 14652 (July 31, 1985) (notice) and 14712 (Sept. 11, 1985) (order); *IDS Certificate Company,* Investment Company Act Release Nos. 17652 (Aug. 3, 1990) (notice) and 17723 (Aug. 31, 1990).

transactions solely for the purpose of managing the interest rate risk associated with the Company's assets and liabilities and not for speculative or other purposes.'' [3] These transactions may involve ''futures, options to buy or sell fixed income securities, repurchase and reverse repurchase agreements, and interest rate swaps, caps, and floors.'' [4]

4. IDSC's current procedures for hedging include approval of any hedging program by an asset/liability committee that has been created by IDSC's investment adviser and includes senior managers of the investment adviser and managers of IDSC. The investment adviser is IDSC's parent company, IDS Financial Corporation. The committee does not review specific transactions before the fact. However, both the committee and IDSC's board of directors are informed of the implementation at their meetings or in written materials prepared for those meetings.

5. There are other significant differences between the D.C. Code and the Minnesota Code:

a. Under the D.C. Code, there is no limit on investments in high-yield, lower grade bonds. In contrast, the Minnesota Code permits no more than 15% of a company's assets to be invested in bonds rated below investment grade by a nationally recognized rating agency or below the two highest of the six rating categories of the National Association of Insurance Commissioners (''NAIC'').

b. The percentage of a portfolio that may be invested in equities is not limited under the D.C. Code, whereas the Minnesota Code permits no more than 20% to be invested in common stock, and no more than 25% to be invested in common and preferred stocks combined. No more than five percent may be invested in preferred stock rated in one of the four lowest NAIC rating categories.

c. Under the D.C. Code, foreign investments other than in Canada are subject to the 5% Limitation. In addition to the investments in Canada, the Minnesota Code allows a company to invest up to ten percent of its assets in certain foreign investments in countries where the obligations of the government are rated in one of the two highest rating categories by a U.S. rating agency.

6. In both Minnesota and the District of Columbia, NAIC principles are used to value the investments of life insurance companies, and most investments are valued at acquisition cost, with amortization of premiums and accretion of discounts, when applicable. IDSC states that there are few differences in valuation requirements between the two jurisdictions. In Minnesota, securities rated by the NAIC in its category 6—the lowest NAIC rating category—are required to be marked to a market value determined by the NAIC, which the D.C. Code does not require. In addition, unlike the D.C. Code, the Minnesota Code contains rules on valuation of commercial mortgage loans and real estate owned as a result of foreclosure on such loans.

7. Section 28(b) provides that the SEC may authorize face-amount certificate companies to invest in qualified investments in addition to those permitted under the D.C. Code. IDSC requests an order under the section to permit it to use the Minnesota Code—instead of the D.C. Code—to determine its qualified investments. IDSC believes that the Minnesota Code governing investments by insurance companies contains several provisions that would enhance the protection of investors and be consistent with the policies and purposes of the Act.

8. IDSC will explain its expanded use of derivative instruments in its prospectus and in a publication to its current certificate holders. In particular, IDSC will explain that it may enter into financial transactions, including futures and other derivatives, for the purpose of managing the interest rate exposures associated with its assets or liabilities. IDSC also will explain that derivatives are financial instruments whose performance is derived, at least in part, from the performance of an underlying asset, security or index, and that a small change in the value of the underlying asset, security or index may cause a sizable gain or loss in the fair value of the derivative.

B. Reserves

1. IDSC also requests an order to change the formula for calculating its minimum reserves. Sections 28(a) and 28(i) specify the amount of reserves required to be maintained on fully paid (or single pay) certificates and installment certificates. The underlying principle in calculating a face-amount certificate company's reserves is to start with the amount of money that will have to be paid at maturity and then to work backward through an analysis similar to a present value calculation. For instance, with a fully paid (or single pay) certificate, section 28(a) requires IDSC to maintain reserves at least equal to the amount, when accumulated at 3½% per annum compounded annually, that will provide the value payable at maturity.

2. The Interest Rate Order permits IDSC to calculate its minimum reserves using a weighted Moody's Corporate Bond Yield Average (''Moody's Index''), as opposed to using the statutory 3½%. IDSC believes that a different formula for calculating its reserves could more closely approximate the usual average maturity of the investments in IDSC's portfolio. Accordingly, IDSC requests an order under section 6(c) to calculate its reserves using the rate of Treasury bonds with seven years remaining to maturity. IDSC requests this order such that, if it so chose, it could comply with the condition to, and rely on, this amended exemption without complying with the other conditions to, or relying on, the other exemptions requested in this application. However, if IDSC relies on the relief requested herein to determine qualified investments, it will comply with all the conditions set forth in this application.

3. Section 6(c) provides that the SEC may exempt any person from any provision of the Act, if and to the extent that such exemption is necessary or appropriate in the public interest and consistent with the protection of investors and the purposes fairly intended by the policy and provisions of the Act. Congress sought adequate and secure reserves for face-amount certificate companies. While it could not have specifically anticipated the country's recent history of widely fluctuating interest rates, Congress did recognize a need for flexibility with changing conditions. Section 6(c) was adopted by Congress to permit the SEC to grant exemptions consistent with the Act's purpose of protecting investors. IDSC believes that its proposal would continue to meet Congress' goal of adequate reserves.

C. Issuing Additional Securities

1. IDSC also requests an order under section 18(j)(1). The section generally provides that face-amount certificate companies may not issue any securities other than face-amount certificates, common stock, and private short-term debt, except as the SEC authorizes by rule, regulation, or order.

2. As discussed above, the Minnesota Code permits companies to engage in certain hedging transactions. To the extent these transactions may involve the issuance of securities other than those permitted by section 18(j)(1), IDSC requests approval to issue these securities.

[3] Minn. Stat. § 61A.28, subdib. 9a (emphasis added).

[4] Minn. Stat. § 61A.28, subdiv. 9a.

D. Custody

1. Section 28(c) requires a face-amount certificate company to deposit and maintain, upon such terms and conditions as the SEC may prescribe by rule, regulation, or order, all certificate reserve investments with a bank. The Custody Orders approve various custodial arrangements for IDSC. Under these arrangements, IDSC's custodian holds assets either directly or in the book entry system of the Depository Trust Company or the Federal Reserve. In addition, a transnational depository, Centrale de Livraison de Valeuers Mobilieres, S.A., holds a small number of foreign bonds. From time to time, the custodian's agent bank, State Street Bank and Trust Co. in New York City, holds short-term securities. Finally, the custodian's agent, Marquette Bank Minneapolis, holds a small number of unregistered bearer securities. IDSC believes that it can maintain custody for most of the investments permitted under the Minnesota Code in accordance with the Custody Orders.

2. IDSC, however, requests an order under section 28(c) to allow certain custody arrangements for exchange-trade options. IDSC proposes to maintain custody of exchange-traded options indirectly through clearing members who will be participating members in the Options Clearing Corporation (''OCC''). The clearing member will hold such options in nonproprietary accounts. IDSC or its custodian will prepare an activity report of every option transaction or exercise, and will identify on its records the quantity of options belonging or attributable to IDSC on the books of the clearing member. IDSC or its custodian will monitor account activity to assure that IDSC's options are appropriately recorded. IDSC's board of directors initially will approve IDSC's use of the OCC system and will review it annually thereafter, together with the annual report from IDSC or its custodian, in conjunction with its overall review of IDSC's custody arrangements.

3. IDSC believes that, in general, these custodial arrangements will be similar to how a management investment company may maintain custody of similar investments under section 17(f). Thus, IDSC believes that it would be appropriate to permit custody of options under safeguards similar to those that apply to custody of such investments when they are made by management investment companies.

Applicant's Conditions

As conditions to the requested relief, applicant agrees to the following, provided that only condition 6 applies to applicant's request to amend applicant's exemption related to its calculation of reserves in order to change the benchmark for such calculation:

1. Qualified investments under section 28(b) of the Act will be determined by reference to Minnesota law governing investments by life insurance companies as such law exists as of the date of the order granting the relief requested in this application, and such other investments as the Commission shall by rule, regulation, or order authorize as qualified investments. However, any investment in municipal revenue bonds held by applicant that is a qualified investment under applicable law immediately prior to the time that the requested exemptions are granted will continue to be a qualified investment even if it would not otherwise be a qualified investment under the requested exemptions.

2. Qualified investments under section 28(b) of the Act will be determined by reference to Minnesota law governing investments by life insurance companies only so long as applicant remains subject to the jurisdiction of and periodic examinations by the Minnesota Commissioner of Commerce.

3. Applicant will not invest in an illiquid security if, immediately after the investment, more than 15% of its investment portfolio would be held in illiquid securities. For these purposes, an illiquid security will be any security which may not be sold or disposed of in the ordinary course of business within seven days at approximately the current market value at which applicant has valued the investment.

4. To the extent required by generally accepted accounting principles, applicant will employ market-based accounting in valuing its portfolio investments for financial reporting purposes.

5. In its prospectuses and in a communication to existing certificate owners, applicant will explain its expanded use of derivative instruments. In particular, applicant will explain that it may enter into financial transactions, including futures and other derivatives, for the purpose of managing interest rate exposures associated with its assets or liabilities. Applicant also will explain that derivatives are financial instruments whose performance is derived, at least in part, from the performance of an underlying asset, security or index, and that a small change in the value of the underlying asset, security or index may cause a sizable gain or loss in the fair value of the derivative. For these purposes, derivatives are interest rate futures, options, forwards, swaps, caps and similar financial transactions.

6. Applicant will maintain an amount of unappropriated earned surplus and capital equal to at least 5% of net certificate reserves. Net certificate reserves means certificate reserves less outstanding certificate loans. In determining compliance with this condition, qualified investments shall be valued in accordance with the provisions of Minnesota Statutes where such provisions are applicable.

By the Commission.

Margaret H. McFarland,

Deputy Secretary.

[FR Doc. 95–13464 Filed 6–1–95; 8:45 am]

BILLING CODE 8010–01–M

[Release No. 35–26296]

Filings Under the Public Utility Holding Company Act of 1935, as amended (''Act'')

May 26, 1995.

Notice is hereby given that the following filing(s) has/have been made with the Commission pursuant to provisions of the Act and rules promulgated thereunder. All interested persons are referred to the application(s) and/or declaration(s) for complete statements of the proposed transaction(s) summarized below. The application(s) and/or declaration(s) and any amendments thereto is/are available for public inspection through the Commission's Office of Public Reference.

Interested persons wishing to comment or request a hearing on the application(s) and/or declaration(s) should submit their views in writing by June 19, 1995, to the Secretary, Securities and Exchange Commission, Washington, DC 20549, and serve a copy on the relevant applicant(s) and/or declarant(s) at the address(es) specified below. Proof of service (by affidavit or, in case of an attorney at law, by certificate) should be filed with the request. Any request for hearing shall identify specifically the issues of fact or law that are disputed. A person who so requests will be notified of any hearing, if ordered, and will receive a copy of any notice or order issued in the matter. After said date, the application(s) and/or declaration(s), as filed or as amended, may be granted and/or permitted to become effective.

West Texas Utilities Company (70–8057)

West Texas Utilities Company (''WTU''), 301 Cypress Street, Abilene, Texas 79601–5820, a wholly owned electric public-utility subsidiary company of Central and South West Corporation, a registered holding company, has filed a post-effective amendment to its declaration under sections 6(a) and 7 of the Act and rule 54 thereunder.

By order of the Commission dated October 7, 1992 (HCAR No. 25649), the Commission authorized WTU, among other things, to issue and sell up to an aggregate principal amount of $150 million of first mortgage bonds (''New Bonds''), in one or more series, from time to time through December 31, 1994. The Company was authorized to use the proceeds from the sale of New Bonds to redeem or purchase some of its then outstanding first mortgage bonds, and repay outstanding short-term borrowings or for other general corporate purposes.

In October 1992, WTU issued $75 million of first mortgage bonds. By order dated December 19, 1994, (HCAR No. 26194) (''Order''), the Commission extended WTU's authorization to issue and sell the remaining $75 million of first mortgage bonds from December 31, 1994 to December 31, 1996. In March 1995, WTU issued $40 million of additional New Bonds. WTU has authority remaining under the Order to issue and sell up to an additional $35 million of New Bonds (''Remaining Bonds'').

WTU now proposes to issue and sell, through December 31, 1997, up to an additional $95 million of first mortgage bonds which, together with the Remaining Bonds would aggregate $130 million of first mortgage bonds (collectively, ''Bonds''). WTU proposes to issue and sell the Bonds with maturities not less than two nor more than 40 years.

The Bonds will be issued under WTU's indenture dated August 1, 1943, to Harris Trust and Savings Bank and J. Bartolini, as Trustees, as amended and supplemented, and secured by a first lien on substantially all of the properties now owned and hereafter acquired by WTU, except for properties specifically excepted from such liens. WTU proposes to issue and sell the Bonds either pursuant to competitive bidding or in negotiated transactions with underwriters or agents.

The Bonds may have redemption or refunding restrictions to be determined at or about the time of sale of the Bonds. WTU further proposes to issue the Bonds with or without a sinking or retirement fund and requests a waiver from the requirement of a limitation on dividends.

The proceeds from the sale of the Bonds will be used to: (1) Redeem all or a portion of WTU's outstanding $55.203 million Series O Bonds; and/or (2) repay a portion of WTU's short-term debt, to provide working capital and for other general corporate purposes.

Mississippi Power Company (70–8127)

Mississippi Power Company (''Mississippi''), 2992 West Beach Boulevard, Gulfport, Mississippi 39501, a wholly owned electric public-utility subsidiary company of The Southern Company, a registered holding company, has filed a post-effective amendment to its application-declaration previously filed under sections 6(a), 7, 9(a), 10, 12(c) and 12(d) of the Act and rules 42 and 44 thereunder.

By orders dated April 13, 1993, June 25, 1993 and December 15, 1993 (HCAR Nos. 25791, 25837 and 25946, respectively), Mississippi was authorized, among other things, to enter into loan agreements and/or installment sales agreements with various public instrumentalities (''Financing Agreements''), in connection with the issuance by those authorities of bonds relating to certain pollution control equipment (''Revenue Bonds''), in amounts aggregating $37.875 million. Mississippi was further authorized to engage in related transactions for the purpose of securing its obligations under the Financing Agreements. The Commission reserved jurisdiction over all transactions, in connection with the issuance and sale by one or more public instrumentalities of one or more series of Revenue Bonds in an aggregate principal amount of up to an additional $11.125 million.

Mississippi proposes that its authority to enter into Financing Agreements relating to Revenue Bonds be increased by $13.875 million, so that it may enter into such agreements in amounts aggregating up to $25 million.

EUA Energy Investment Corporation (70–8617)

EUA Energy Investment Corporation (''EEIC''), P.O. Box 2333, Boston, Massachusetts 02107, a wholly owned nonutility subsidiary of Eastern Utilities Associates (''EUA''), a registered holding company, has filed an application-declaration pursuant to sections 6(a), 7, 9(a), 10, and 12(b) of the Act and rules 43(a) and 45(a) promulgated thereunder.

By orders dated December 4, 1987 (HCAR No. 24515) and April 15, 1994 (HCAR 26028), the Commission authorized EEIC to engage in certain energy related research and development activities. Pursuant to these orders, EEIC has developed certain proprietary technology with a group of individuals and companies not associated with EEIC (''Wood Group''). Additionally, EEIC has acquired certain related contract rights and equipment related to this technology (together with such technology, ''Proprietary Technology''). The Proprietary Technology relates to the development and commercialization of biomass-fired combustion turbine power generation facilities and products and/or services offered in connection with such facilities (''Business Opportunity'').

EEIC requests Commission authorization to incorporate a nonutility subsidiary (''EEIC Subsidiary''), which would participate as one of two general partners in a proposed joint venture (''BIOTEN Partnership''), along with a corporation to be established by the Wood Group (''BIOTEN LLC''). The initial authorized capitalization of the EEIC Subsidiary will be 200,000 shares of Common Stock, $.01 par value per share. EEIC, which will be the sole owner of the EEIC Subsidiary, will acquire 100 of the authorized shares of the EEIC Subsidiary Common Stock in exchange for its contribution of the Proprietary Technology to the EEIC Subsidiary.

The EEIC subsidiary will, in turn, contribute the Proprietary Technology to the BIOTEN Partnership in exchange for its general partnership interest. BIOTEN LLC will contribute its title to all shares of a to-be-formed wholly-owned subsidiary of BIOTEN LLC (''BIOTEN Operations'') in exchange for its general partnership interest in the BIOTEN Partnership. BIOTEN Operations will own certain property to be used in connection with the Business Opportunity at the time its stock is transferred to the BIOTEN Partnership.

In addition, EEIC requests authorization through December 31, 1998 to make additional capital contributions to the BIOTEN Partnership in an aggregate amount of up to $3,907,000. This would consist of up to $1.907 million to be disbursed in connection with the testing and development of a commercial prototype plant using the Proprietary Technology and, possibly, an additional $2 million (''Additional Contribution'').

EEIC will at all times own no more than a 9.9% voting interest in the BIOTEN Partnership. However, EEIC will initially have a 30% interest in the profits of the BIOTEN Partnership upon its formation. Also, EEIC will also

receive an additional one and one-half percent share of the partnership's profits for each $100,000 that its capital contribution to the partnership exceeds $1.607 million, exclusive of the Additional Contribution. This share of the partnership's profits will increase to 45% upon EEIC's election to make the Additional Contribution, which election is solely within EEIC's discretion.

EEIC also requests Commission authorization from time to time through December 31, 1998 to provide the BIOTEN Partnership with a line of credit of up to $3 million. Advances made under this line of credit will bear interest at an annual rate equal to the prime lending rate announced from time to time by The First National Bank of Boston, N.A., plus (a) 6% at any time the Additional Contribution has been made but not yet repaid to EEIC and (b) 2% after the Additional Contribution made to the BIOTEN Partnership has been repaid, but in no event to exceed 16% per annum.

All advances made under the line of credit will become due and payable three years after the later of (a) the date of the partnership agreement establishing the BIOTEN Partnership and (b) the date such line of credit is first drawn upon. All advances under this line of credit will be evidenced by a promissory note and the BIOTEN Partnership's obligations under the note will be secured by a first priority security interest in the assets of the BIOTEN Partnership.

UNITIL Corp., et al. (70–8623)

UNITIL Corporation (''UNITIL''), a registered holding company, and its wholly owned subsidiary companies (''Subsidiaries''), Concord Electric Company (''Concord''), Exeter & Hampton Electric Company (''E&H''), Fitchburg Gas and Electric Light Company (''Fitchburg''), UNITIL Power Corp. (''UNITIL Power''), UNITIL Realty Corp. (''UNITIL Realty''), UNITIL Resources, Inc. (''UNITIL Resources''), and UNITIL Service Corp. (''UNITIL Service''), all of 216 Epping Road, Exeter, New Hampshire, 03833, have filed an application-declaration under sections 6(a), 7, 9(a), 10 and 12(b) and the Act and rules 43 and 45 thereunder.

The application-declaration seeks Commission authorization for: (i) The issuance of unsecured bank notes in support of short-term borrowing by UNITIL through June 30, 1997 of up to $15 million on a revolving basis from certain banks; (ii) short-term borrowing by the Subsidiaries pursuant to formal or informal credit lines up to stated limits through June 30, 1997; and, (iii) continued use of the system money pool (''Money Pool'') through June 30, 1997, pursuant to the February 1, 1985 Cash Pooling and Loan Agreement (''Pooling Agreement'') among UNITIL and the Subsidiaries.

By order dated March 29, 1993 (HCAR No. 25773) (''Order''), UNITIL and the Subsidiaries, with the exception of UNITIL Resources, were authorized to make unsecured short-term borrowings up to stated limits and to operate under the Money Pool through June 30, 1995. UNITIL Resources now seeks Commission authorization to engage in short-term borrowing of up to $500,000. In addition, UNITIL Resources seeks authorization to operate under the Money Pool.

UNITIL proposes to issue bank notes pursuant to which it will be allowed to borrow up to $15 million at the base or prime rate. These borrowings will be subject to prepayment at UNITIL's option. In some instances the borrowings may bear an interest rate that is the higher of the base rate or ½ of one percent per annum above the daily Federal Funds Rate published by the Federal Reserve Bank of New York. In addition, short-term notes may be offered at fixed money market rates. Money market rate borrowings may or may not be subject to prepayment. Borrowings will not exceed the nine months.

Concord, E&H, Fitchburg, UNITIL Power, UNITIL Realty, UNITIL Resources and UNITIL Service seek authorization to incur short-term borrowings from any source, but principally if not exclusively from the Money Pool, of up to the following amounts (in millions of dollars):

Concord	5
E&H	5
Fitchburg	12
UNITIL Power	6
UNITIL Realty	7
UNITIL Resources	.5
UNITIL Service	1

Short-term borrowing from commercial banks undertaken by the Subsidiaries will be under terms and conditions substantially similar to the terms and conditions of the short-term borrowing agreements entered into by UNITIL.

The Pooling Agreement allows UNITIL and the Subsidiaries to invest their surplus funds and the Subsidiaries to borrow on an equal basis. UNITIL Service administers the Money Pool for UNITIL and the Subsidiaries on an ''at-cost'' basis. UNITIL and the Subsidiaries propose to continue operating under the Money Pool pursuant to the same terms and conditions as authorized in the Order.

For the Commission, by the Division of Investment Management, pursuant to delegated authority.

Margaret H. McFarland,

Deputy Secretary.

[FR Doc. 95–13530 Filed 6–1–95; 8:45 am]

BILLING CODE 8010–01–M

[Release No. 35–26297]

Filings Under the Public Utility Holding Company Act of 1935, as Amended (''Act'')

May 26, 1995.

Notice is hereby given that the following filing(s) has/have been made with the Commission pursuant to provisions of the Act and rules promulgated thereunder. All interested persons are referred to the application(s) and/or declaration(s) for complete statements of the proposed transaction(s) summarized below. The application(s) and/or declaration(s) and any amendments thereto is/are available for public inspection through the Commission's Office of Public Reference.

Interested persons wishing to comment or request a hearing on the application(s) and/or declaration(s) should submit their views in writing by June 19, 1995, to the Secretary, Securities and Exchange Commission, Washington, DC 20549, and serve a copy on the relevant applicant(s) and/or declarant(s) at the address(es) specified below. Proof of service (by affidavit or, in case of an attorney at law, by certificate) should be filed with the request. Any request for hearing shall identify specifically the issues of fact or law that are disputed. A person who so requests will be notified of any hearing, if ordered, and will receive a copy of any notice or order issued in the matter. After said date, the application(s) and/or declaration(s), as filed or as amended, may be granted and/or permitted to become effective.

Blackstone Valley Electric Company (70–8633)

Notice of Proposal to Increase Unsecured Indebtedness Limitation of Preferred Stock; Order Authorizing Solicitation of Proxies

Blackstone Valley Electric Company (''BVEC''), Washington Highway, P.O. Box 1111, Lincoln, Rhode Island 02865, an electric public-utility subsidiary company of Eastern Utilities Associates, a registered holding company, has filed a declaration with the Commission under Sections 6(a), 7, and 12(e) of the Act and Rules 62 and 65 thereunder.

The terms of the preferred stock of BVEC provide that, except with the consent of a majority of the preferred stock then outstanding, the amount of unsecured indebtedness of the company having maturities of less than ten years which the company may issue or assume shall not exceed 10% of the sum of the principal amount of all bonds and other securities representing secured indebtedness and the capital and surplus of the company. The amount of all unsecured indebtedness of the company issued or assumed shall not exceed 20% of such sum.

At a special meeting of the holders of BVEC preferred stock held on October 8, 1985, BVEC was authorized, for a five year period ending October 1, 1990, to issue or assume unsecured indebtedness, having maturities of less than ten years, in excess of the 10% limitation. Subsequently, at a special meeting of the holders of BVEC preferred stock held on September 27, 1990, it was voted to extend such authorization for an additional five year period ending October 1, 1995.

BVEC now seeks Commission authorization to issue or assume unsecured indebtedness having maturities of less than ten years in excess of the 10% limitation at various times during an additional five year period. In addition under applicable provisions of the Preferred Stock Provisions, adoption of the proposal with respect to the unsecured debt limitation requires the affirmative vote of a majority of the total number of outstanding shares of BVEC's preferred stock (which consists of two series par value of $100 per share) voting as a single class.

BVEC proposes and requests authorization to submit the proposal to extend the authorization permitting the issuance or assumption by BVEC of unsecured indebtedness having maturities of less than ten years in excess of the 10% limitation to the holders of its preferred stock for approval at the special meeting of preferred stockholders to be held on July 6, 1995. In connection therewith, BVEC proposes to solicit proxies from its preferred stockholders.

It's appearing that the declaration, as amended, regarding the proposed solicitation of proxies should be permitted to become effective forthwith pursuant to Rule 62:

It is ordered, pursuant to Rule 62, that the declaration regarding the proposed solicitation of proxies be, and it hereby is, permitted to become effective forthwith, subject to the terms and conditions prescribed in Rule 24 under the Act.

For the Commission, by the Division of Investment Management, pursuant to delegated authority

Margaret H. McFarland,

Deputy Secretary.

[FR Doc. 95–13531 Filed 6–1–95; 8:45 am]

BILLING CODE 8010–01–M

[Rel. No. IC–21097; 812–9464]

Security Equity Life Insurance Company, et al.

May 25, 1995.

AGENCY: Securities and Exchange Commission (''SEC'').

ACTION: Notice of application for exemption under the Investment Company Act of 1940 (the ''Act'').

APPLICANTS: Security Equity Life Insurance Company (''Security Equity''), Security Equity Separate Accounts 26 and 27 (the ''Separate Accounts''), and G.T. Global Financial Services, Inc. (''G.T. Global'').

RELEVANT ACT SECTIONS: Order requested under section 6(c) of the Act that would exempt applicants from sections 26(a)(2)(C) and 27(c)(2) of the Act.

SUMMARY OF APPLICATION: Appliants request an order to permit Security Equity to deduct a mortality and expense risk charge from the assets of the Separate Accounts in connection with the offering of certain flexible premium variable deferred annuity contracts (the ''Contracts'').

FILING DATE: The application was filed on February 2, 1995. Applicants have agreed to file an amendment, the substance of which is incorporated herein, during the notice period.

HEARING OR NOTIFICATION OF HEARING: An order granting the application will be issued unless the SEC orders a hearing. Interested persons may request a hearing by writing to the SEC's Secretary and serving applicants with a copy of the request, personally or by mail. Hearing requests should be received by the SEC by 5:30 p.m. on June 19, 1995, and should be accompanied by proof of service on applicants, in the form of an affidavit or, for lawyers, a certificate of service. Hearing requests should state the nature of the writer's interest, the reason for the request, and the issues contested. Persons may request notification of a hearing by writing to the SEC's Secretary.

ADDRESSES: Secretary, SEC, 450 5th Street NW., Washington, D.C. 20549. Applicants, c/o Juanita M. Thomas, Esq., Assistant Counsel, Security Equity Life Insurance Company, 700 Market Street, St. Louis, Missouri 63101; c/o Peter R. Guarine, Esq., G.T. Global Financial Services, Inc., 50 California Street, San Francisco, California 94111.

FOR FURTHER INFORMATION CONTACT: James M. Curtis, Senior Counsel, at (202) 942–0563, or Robert A. Robertson, Branch Chief, (202) 942–0564 (Office of Investment Company Regulation, Division of Investment Management).

SUPPLEMENTARY INFORMATION: The following is a summary of the application. The complete application may be obtained for a fee at the SEC's Public Reference Branch.

Applicants' Representations

1. Security Equity is a stock life insurance company incorporated under the laws of New York and is licensed to do business in thirty-eight states and the District of Columbia.

2. The Separate Accounts were established by Security Equity as separate accounts under the laws of the State of New York, and each has been registered with the SEC under the Act as a unit investment trust. A registration statements has been filed under the Securities Act of 1933 in connection with the Contracts. Each of the Separate Accounts is divided into divisions (''Divisions''), each of which will invest solely in the shares of one of the series of G.T. Global Variable Investment Series or G.T. Global Variable Investment Trust (a ''Fund''), or in other similar funds available under the Contracts. Each Fund is a registered open-end management investment company.

3. G.T. Global will serve as the distributor and principal underwriter of the Contracts. G.T. Global is registered under the Securities Exchange Act of 1934 as a broker-dealer and is a member of the National Association of Securities Dealers, Inc.

4. The Contract is a variable flexible premium annuity contract designed for use as a non-qualified retirement vehicle and as an Individual Retirement Annuity. The Contract may be purchased with a minimum initial purchase payment of $2,000. Subsequent purchase payments must be at least $100. The Contract owner may allocated purchase payments among one or more Divisions of the Separate Accounts.

5. In the event that an annuitant who is not a Contract owner dies prior to the annuity date and before a Contract owner, a death benefit is payble upon receipt of due proof that the annuitant died prior to the annuity date and before a Contract owner. The death benefit during the first six contract years is equal to the greater of the accumulated

value on the date of receipt of due proof of death and a written request for payment or the sum of all net purchase payments made, less partial withdrawals (including applicable charges). The death benefit during any subsequent six contract year period is the greater of accumulated value on the date of receipt of due proof of death and a written request for payment or the death benefit on the last day of the previous six contract year period plus any net purchase payments made less any partial withdrawals (including applicable charges). Notwithstanding the foregoing, if the issue date is on or after the annuitant's 75th birthday, the death benefit is the accumulated value on the date due proof of death and a written request for payment are received. in each case, except for Contracts with accumulated values of $20,000 or more, the death benefit is reduced by an account fee and applicable special handling fees.

6. In the event that a Contract owner dies prior to the annuity date and his or her surviving spouse is not the beneficiary or annuitant, the beneficiary (or the beneficiary's estate) is entitled to receive a death benefit equal to the amount described in the preceding paragraph. In the event that the Contract owner dies prior to the annuity date and his or her surviving spouse is the annuitant or beneficiary, the spouse may elect to become the new owner.

7. Security Equity will deduct an annual account administration fee (the ''Account Fee'') on accumulated values of less than $20,000. Revenues from the Account Fee will partially compensate Security Equity for the cost of providing administrative services relating to the issue and maintenance of the Contract and the Contract owner's records. The Account Fee will be deducted from the accumulated value of a Contract on each contract anniversary prior to the annuity date and upon full surrender of the Contract or upon the annuity date if other than a contract anniversary. In contract years ending prior to December 31, 1999, the Account Fee is the lesser of $30 or 2% of the Accumulated Value. Thereafter, the Account Fee may be changed annually but will not exceed an amount that reflects the change in the Consumer Price Index since December 31, 1992 or $50.00. This fee will be deducted from the money market Division or from the Division having the largest portion of accumulated value under the Contract if no money market Division investment exists on the contract anniversary. After the annuity date, the Account Fee will be deducted in equal amounts from each variable annuity payment throughout the year. No Account Fee is deducted in connection with fixed annuity payments.

8. Security Equity also will deduct a daily administration fee, equal to an annual rate of .15% of the average daily net assets of each Division. This charge is designed to reimburse Security Equity for those administrative expenses attributable to the Contracts, contract owner accounts and records, and the Separate Accounts which exceed the revenues received from the account fee. The administration fee is guaranteed not to increase for the life of the Contracts.

9. Transfers of accumulated values under the Contracts may be made among the Divisions. Security Equity reserves the right to charge $25 for each transfer in excess of twelve transfers in any contract year.

10. Applicants represent that this charge will be deducted in reliance on rule 26a–1 under the Act and that the fee applicable during contract years ending prior to December 31, 1999 represents reimbursement only for administrative costs expected to be incurred over these contract years and the fee applicable in any contract year thereafter represents reimbursement only for administrative costs expected to be incurred over that year. Security Equity does not anticipate making any profit from this charge.

11. Security Equity may assess a contingent deferred sales charge surrender charge (''Surrender Charge'') if any part of a Contract owner's accumulated value is withdrawn or if the Contract is surrendered. This Surrender Charge, calculated as a percentage of any net purchase payment, will apply to net purchase payments for seven years from the date the net purchase payment is received. Net purchase payments received more than seven years prior to the date of withdrawal and accumulated value in excess of accumulated net purchase payments (less withdrawals of net purchase payments) may be withdrawn without incurring a Surrender Charge. The Surrender Charge ranges from 7% to 1% of a net purchase payment. Notwithstanding the Surrender Charge, an amount equal to 10% of a Contract's accumulated value may be withdrawn each year (calculated as of the date of the first such withdrawal in that year) without incurring the Surrender Charge. The Surrender Charge will apply for seven complete years measured from the date a net purchase payment is received, according to the following schedule:

Years since receipt of net purchase payment	Surrender charge percentage
0	7
1	6
2	5
3	4
4	3
5	2
6	1
7+	0

For purposes of computing the Surrender Charge, after the 10% amount described above has been withdrawn for any year, net purchase payments are considered to be withdrawn on a first-in-first-out basis, and net purchase payments are considered to be withdrawn before earnings thereon. If, after the 10% of accumulated value has been withdrawn, the Contract's accumulated value is less than the sum of net purchase payments (less prior withdrawals of net purchase payments) the Surrender Charge will be assessed on accumulated value. A Surrender Charge is not imposed in the event of annuitization with Security Equity after three Contract years, or on the death of the annuitant.

12. Security Equity does not anticipate that Surrender Charge revenues from the Contracts will generate sufficient funds to pay the cost of distributing the Contracts. If Surrender Charge revenues are insufficient to cover distribution expenses, the deficiency will be met with amounts from Security Equity's general account, which may include amounts derived from the mortality and expense risk charge.

13. Security Equity may incur premium taxes relating to the Contracts. Security Equity may deduct any premium taxes related to a particular Contract upon receipt of payment, surrender, withdrawal, annuitization, or payment of death benefits.

14. Security Equity proposes to impose a daily charge to compensate it for bearing certain mortality and expense risks in connection with the Contracts. This charge will be at an annual rate of 1.25% of the average daily net assets in the Separate Accounts. Of that amount, approximately 1.00% is attributable to mortality risks, and approximately 0.25% is attributable to expense risks. Security Equity guarantees that this charge will never exceed 1.25%.

15. The mortality risk that Security Equity assumes is that annuitants may live for a longer period of time than estimated when the guarantees in the

Contract wre established. Because of these guarantees, each Contract owner is assured that longevity will not have an adverse effect on the annuity payments received. The mortality risk that Security Equity assumes also includes a guarantee to pay a death benefit. The expense risk that Security Equity assumes is the risk that the account fee and the daily administration fee will be insufficient to cover actual future administrative expenses.

16. If the mortality and expense risk charge is insufficient to cover actual costs and assumed risks, the loss will fall on Security Equity. Conversely, if the charge is more than sufficient to cover such costs and risks, any excess will be profit to Security Equity. Security Equity currently anticipates a profit from this charge.

Applicants' Legal Analysis

1. Applicants request an exemption under section 6(c) of the Act from sections 26(a)(2)(C) and 27(c)(2) of the Act to permit the deduction of a mortality and expense risk charge from the assets of the Separate Account under the Contracts.

2. Section 26(a)(2)(C) provides that no payment to the depositor of, or principal underwriter for, a registered unit investment trust shall be allowed the trustee or custodian as an expense except compensation, not exceeding such reasonable amount as the SEC may prescribe, for performing bookkeeping and other administrative duties normally performed by the trustee or custodian. Section 27(c)(2) prohibits a registered investment company, or a depositor or underwriter for such company, from selling periodic payment plan certificates unless the proceeds of all payments on such certificates, other than sales loads, are deposited with a trustee or custodian having the qualifications prescribed in Section 26(a)(1), and held by such trustee or custodian under an agreement containing substantially the provisions required by Sections 26(a)(2) and 26(a)(3) of the Act. Security Equity's deduction of a mortality and expense risk charge from the assets of the Separate Accounts may be deemed to be a payment prohibited by sections 26(a)(2)(c) and 27(c)(2).

3. Section 6(c) authorizes the SEC to exempt any person, security or transaction, or any class or classes of persons, securities or transactions from the provisions of the Act and the rules promulgated thereunder if and to the extent that such exemption is necessary or appropriate in the public interest and consistent with the protection of investors and the purposes fairly intended by the policy and provisions of the Act.

4. Applicants believe that Security Equity is entitled to reasonable compensation for its assumption of mortality and expense risks. Applicants represent that the 1.25% mortality and expense risk charge under the Contracts is consistent with the protection of investors because it is a reasonable and proper insurance charge. In return for this amount, Security Equity guarantees certain annuity rates and assumes certain risks in the Contracts. The mortality and expense risk charge is a reasonable charge to compensate Security Equity for the risk that annuitants under the Contracts will live longer than has been anticipated in setting the annuity rates guaranteed in the Contracts; for the risk that the accumulated value under a Contract, less any otherwise applicable charges, will be less than the death benefit; and for the risk that administrative expenses will be greater than amounts derived from the account and administrative fees and other administrative charges.

5. Security Equity represents that the 1.25% charge for mortality and expense risks assumed by Security Equity is within the range of industry practice with respect to comparable annuity products. This representation is based upon Security Equity's analysis of publicly available information about similar industry products, taking into consideration such factors as current charge levels, the existence of charge level guarantees, and guaranteed annuity rates. Security Equity will maintain at its home office or at General American Life Insurance Company, available to the SEC, a memorandum setting forth in detail the products analyzed in the course of, and the methodology and results of, its comparative survey.

6. Applicants acknowledge that if a profit is realized from the mortality and expense risk charge, all or a portion of such profit may be viewed by the SEC as being offset by distribution expenses not reimbursed by revenues from the Surrender Charge. Security Equity has concluded that there is a reasonable likelihood that the proposed distribution financing arrangements will benefit the separate Accounts and the Contract owners. The basis for such conclusion is set forth in a memorandum which will be maintained by Security Equity at its home office or by its service provider, General American Life Insurance Company, at its National Service Center and will be available to the SEC.

7. Security Equity also represents that the Separate Accounts will only invest in management investment companies which undertake, in the event such company adopts a plan under rule 12b–1 of the Act to finance distribution expenses, to have a board of directors, a majority of whom are not interested persons of the company, formulate and approve any such plan under rule 12b–1.

Conclusion

For the reasons set forth above, applicants believe that the requested exemption is necessary or appropriate in the public interest and consistent with the protection of investors and the purposes fairly intended by the policy and provisions of the Act.

For the SEC, by the Division of Investment Management, pursuant to delegated authority.

Margaret H. McFarland,

Deputy Secretary.

[FR Doc. 95–13467 Filed 6–1–95; 8:45 am]

BILLING CODE 8010–01–M

SOCIAL SECURITY ADMINISTRATION

Agency Forms Submitted to the Office of Management and Budget for Clearance

Normally on Fridays, the Social Security Administration publishes a list of information collection packages that have been submitted to the Office of Management and Budget (OMB) for clearance in compliance with Public Law 96–511, The Paperwork Reduction Act. The following clearance packages have been submitted to OMB since the last list was published in the **Federal Register** on Friday, May 12, 1995.

(Call Reports Clearance Officer on (410) 965–4142 for copies of package)

1. Student's Statement Regarding School Attendance—0960–0105. The information on form SSA–1372 is used by the Social Security Administration to determine if a claimant is entitled to Social Security benefits as a student. Respondents are student claimants for Social Security benefits.

Number of Respondents: 200,000
Frequency of Response: 1
Average Burden Per Response: 10 minutes
Estimated Annual Burden: 33,333 hours

2. Request for Earnings Benefits Estimate Statement—0960–0466. The information on form SSA–7004 is used by the Social Security Administration to provide a statement of earnings, quarters of coverage and future benefit estimates to certain workers and self-employed individuals. The respondents are

individuals requesting personal earnings and benefit statements.

Number of Respondents: 20,000,000
Frequency of Response: 1
Average Burden Per Response: 5 minutes
Estimated Annual Burden: 1,166,667 hours

3. Statement of Agricultural Employer (Years Prior to 1988); Statement of Agricultural Employer Years 1988 and Later—0960–0036. The information on forms SSA–1002 and SSA–1003 is used by the Social Security Administration to resolve discrepancies when farm workers have alleged that their employers did not report their wages or reported them incorrectly. The respondents are agricultural employers.

Number of Respondents: 125,000
Frequency of Response: 1
Average Burden Per Response: 10 minutes (SSA–1002)
30 minutes (SSA–1003)
Estimated Annual Burden: 37,500 hours
OMB Desk Officer: Laura Oliven.

Social Security Administration

Written comments and recommendations regarding these information collections should be sent directly to the appropriate OMB Desk Officer designated above at the following address: Office of Management and Budget, OIRA, New Executive Office Building, Room 10230, Washington, D.C. 20503.

Dated: May 26, 1995.

Charlotte Whitenight,

Reports Clearance Officer, Social Security Administration.

[FR Doc. 95–13523 Filed 6–1–95; 8:45 am]

BILLING CODE 4190–29–P

THRIFT DEPOSITOR PROTECTION OVERSIGHT BOARD

Regional Advisory Board Meetings for Regions 1–6

AGENCY: Thrift Depositor Protection Oversight Board.

ACTION: Meetings notice.

SUMMARY: In accordance with section 10(a)(2) of the Federal Advisory Committee Act (Pub. L. 92–463), announcement is hereby published for the Series 21 and 22 Regional Advisory Board meetings for Regions 1 through 6. The meetings are open to the public.

DATES: The 1995 Series 21 and 22 meetings are scheduled as follows:

1. June 20 (Series 21), 3 p.m. to 5 p.m.; June 21 (Series 22), 9 a.m. to 12 noon, Dallas, Texas, Region 4 Advisory Board.

2. June 22 (Series 21), 3 p.m. to 5 p.m.; June 23 (Series 22), 9 a.m. to 12 noon, Freeport, Maine, Region 1 Advisory Board.

3. July 6 (Series 21), 3 p.m. to 5 p.m.; July 7, (Series 22), 9 a.m. to 12 noon, Denver, Colorado, Region 5 Advisory Board.

4. July 13 (Series 21), 3 p.m. to 5 p.m.; July 14 (Series 22), 9 a.m. to 12 noon, San Diego, California, Region 6 Advisory Board.

5. July 18, (Series 21), 3 p.m. to 5 p.m.; July 19 (Series 22), 9 a.m. to 12 noon, Chicago, Illinois, Region 3 Advisory Board.

6. July 27 (Series 21), 3 p.m. to 5 p.m.; July 28 (Series 22), 9 a.m. to 12 noon, Nashville, Tennessee, Region 2 Advisory Board.

ADDRESSES: The meetings will be held at the following locations:

1. Dallas, Texas—Harvey Hotel Dallas, 400 North Olive.

2. Freeport, Maine—Harraseeket Inn, 162 Main Street.

3. Denver, Colorado—Stouffer Concourse Hotel, 3801 Quebec Street.

4. San Diego, California—Pan Pacific Hotel, 400 West Broadway.

5. Chicago, Illinois—Federal Deposit Insurance Corporation, 500 West Monroe Street, 32nd Floor.

6. Nashville, Tennessee—Stouffer Renaissance Nashville, 611 Commerce Street.

FOR FURTHER INFORMATION CONTACT: Jill Nevius, Committee Management Officer, Thrift Depositor Protection Oversight Board, 808 17th Street NW., Washington, DC 20232, 202/416–2626.

SUPPLEMENTARY INFORMATION: Section 501(a) of the Financial Institutions Reform, Recovery, and Enforcement Act of 1989, Public Law No. 101–73, 103 Stat. 183, 382–383, directed the Oversight Board to establish one national advisory board and six regional advisory boards. Since July 1990, these citizen advisory boards have provided private-sector perspectives on the role of the federal government in the resolution of the S&L crisis. The Series 21 and 22 meeting are the final series of the regional boards prior to termination of the Resolution Trust Corporation on December 31, 1995. The meetings will be held on consecutive days.

Purpose

The Regional Advisory Boards provide the Resolution Trust Corporation (RTC) with recommendations on the policies and programs for the sale of RTC-owned real property assets.

Agenda

The agenda for Series 21, on the first day, will include remarks from the board's chair and Oversight Board staff, as well as a final report and transition briefing from the respective regional RTC vice presidents. The agenda for Series 22, on the second day, will include remarks from the board's chair and Oversight Board staff, as well as a presentation on the draft document of the history of the advisory boards. Each meeting will include a public forum.

Statements

Interested persons may submit to an Advisory Board written statements, data, information or views on the issues pending before the board prior to or at the meeting. Interested persons may also sign up for the public forum at each meeting. Oral comments will be limited to approximately five minutes. All meetings are open to the public. Seating is available on a first come, first served basis.

Dated: May 30, 1995.

Jill Nevius,

Committee Management Officer, Office of Advisory Board Affairs.

[FR Doc. 95–13487 Filed 6–1–95; 8:45 am]

BILLING CODE 2221–01–M

DEPARTMENT OF TRANSPORTATION

Aviation Proceedings; Agreements filed during the Week Ended May 26, 1995

The following Agreements were filed with the Department of Transportation under the provisions of 49 U.S.C. 412 and 414. Answers may be filed within 21 days of date of filing.

Docket Number: 50368
Date filed: May 25, 1995
Parties: Members of the International Air Transport Association
Subject: TC12 Reso/P 1669 dated May 23, dated May 23, 1995, Mid Atlantic-Europe Expedited Resos, r-1-073ii r-2- 074c r-3- 015v
Proposed Effective Date: expedited August 1, 1995.

Paulette V. Twine,

Chief, Documentary Services Division.

[FR Doc. 95–13548 Filed 6–1–95; 8:45 am]

BILLING CODE 4910–62–M

Notice of Applications for Certificates of Public Convenience and Necessity and Foreign Air Carrier Permits Filed Under Subpart Q during the Week Ended May 26, 1995

The following Applications for Certificates of Public Convenience and

Necessity and Foreign Air Carrier Permits were filed under Subpart Q of the Department of Transportation's Procedural Regulations (See 14 CFR 302.1701 *et seq.*). The due date for Answers, Conforming Applications, or Motions to Modify Scope are set forth below for each application. Following the Answer period DOT may process the application by expedited procedures. Such procedures may consist of the adoption of a show-cause order, a tentative order, or in appropriate cases a final order without further proceedings.

Docket Number: 50361.

Date filed: May 22, 1995.

Due Date for Answers, Conforming Applications, or Motion to Modify Scope: June 19, 1995.

Description: Application of Translux International Airlines SA d/b/a Cargo Lion, pursuant to Section 41301, and Subpart Q of the Act, applies for a Foreign Air Carrier Permit, to operate non-scheduled and charter all-cargo air services between points in Luxembourg and points in the United States.

Docket Number: 49896.

Date filed: May 22, 1995.

Due Date for Answers, Conforming Applications, or Motion to Modify Scope: June 19, 1995.

Description: Application of MVP Airlines, Inc., pursuant to Section 401(d) of the Act, requests that their name be changed to ''air 21, Inc.'' and that the Department grant the certificate of public convenience and necessity, to engage in interstate and overseas scheduled and charter air transportation under the new name of ''air 21, Inc.''

Paulette V. Twine,

Chief, Documentary Services Division.

[FR Doc. 95–13547 Filed 6–1–95; 8:45 am]

BILLING CODE 4910–62–P

Office of the Secretary

Solicitation of Public Comment on Proposed Western Hemisphere Transportation Initiative; Notice of Meeting

SUMMARY: The Office of International Transportation and Trade, U.S. Department of Transportation, invites comments on a proposed Western Hemisphere Transportation Initiative. The public is invited to a meeting on June 20, 1995, at the Transportation Department, 400 7th Street, SW, Washington, DC, in Room 2230, to discuss concerns and key issues regarding transportation in the Western Hemisphere for use in developing the agenda for a conference of transport ministers from the region.

SUPPLEMENTARY INFORMATION: The Department of Transportation organized a Conference on Transportation in the Americas in October 1994 as a precursor to the Summit of the Americas in December. Transport ministers from twelve countries met to discuss the critical transportation issues that confront each country in the region and the hemisphere as a whole. The conference was designed to serve as a platform from which to launch additional cooperative efforts to build an efficient and integrated transportation network throughout the hemisphere.

The ministers' discussions touched on a wide range of key transportation issues, including ways to improve planning and financing of critical transportation projects; economic regulation of transport operations and facilitation of transportation and trade procedures; developing and deploying new technologies to improve the efficiency and environmental friendliness of transport systems; and, harmonizing construction, safety, and operating regulations.

The Summit of the Americas specifically endorsed future cooperation among transport ministers throughout the region. Recognizing the critical role that transportation plays in a nation's trade, tourism, and economic and social development, the Department of Transportation proposes to cooperate with all the countries in the hemisphere to launch a hemispheric transportation initiative. The initiative should promote sustainable and environmentally sound transport infrastructure development, encourage open investment and operating regimes, ensure that technologies are shared so that every nation will benefit from improvements in the efficiency and harmonization of transportation systems and services, and it should provide for the development of common approaches to problems in transport systems.

The Department of Transportation would like to solicit the transportation industry's (service providers and users, equipment manufacturers, construction and engineering firms, and labor) thoughts and ideas to assist in identifying key issues and areas for cooperation among the countries of the Western Hemisphere. The Department is interested in hearing what, in the industry's experience, are the areas that could benefit from the focused attention of the hemisphere's transport ministers. For those who wish to comment but cannot attend the meeting, written comments may be submitted to the individuals named below. The fax number for the Office of International Transportation and Trade is (202) 366–7417. To advise of attendance and for further information contact LeeAnn Moore, International Transportation Specialist, at (202) 366–1219.

Dated: May 26, 1995.

Bernestine Allen,

Chief, International Cooperation and Trade Division, Office of International Transportation and Trade, U.S. Department of Transportation.

[FR Doc. 95–13518 Filed 6–1–95; 8:45 am]

BILLING CODE 4910–62–P

Federal Aviation Administration

Flight Service Station at Stockton, California; Closure

Notice is hereby given that on May 20, 1995, the Flight Service Station (FSS) at Stockton, California, will close. Services to the general aviation public of Stockton, California, formerly provided by this facility, are provided by the Automated Flight Service Station (AFSS) in Rancho Murieta, California. This information will be reflected in the next issue of the FAA Organization Statement.

(Sec. 313(a), 72 Stat. 752, 49 U.S.C. 1354)

Issued in Lawndale, California, on May 25, 1995.

Lynore C. Brekke,

Acting Regional Administrator, Western-Pacific Region.

[FR Doc. 95–13495 Filed 6–1–95; 8:45 am]

BILLING CODE 4910–13–M

Intent To Rule on Application To Impose and Use a Passenger Facility Charge (PFC) at Orlando International Airport, Orlando, FL

AGENCY: Federal Aviation Administration (FAA), DOT.

ACTION: Notice of Intent to Rule on Application.

SUMMARY: The FAA proposes to rule and invites public comment on the application to Impose and Use a PFC at Orlando International Airport under the provisions of the Aviation Safety and Capacity Expansion Act of 1990 (Title IX of the Omnibus Budget Reconciliation Act of 1990) (Pub. L. 101–508) and part 158 of the Federal Aviation Regulations (14 CFR part 158).

DATES: Comments must be received on or before July 3, 1995.

ADDRESSES: Comments on this application may be mailed or delivered in triplicate to the FAA at the following address: Orlando Airports District Office, 9677 Tradeport Drive, Suite 130, Orlando, Florida 32827.

In addition, one copy of any comments submitted to the FAA must be mailed or delivered to Robert B. Bullock, Executive Director, Greater Orlando Aviation Authority at the following address: Orlando International Airport, One Airport Boulevard, Orlando, Florida 32827.

Air carriers and foreign air carriers may submit copies of written comments previously provided to the Greater Orlando Aviation Authority under § 158.23 of Part 158.

FOR FURTHER INFORMATION CONTACT: Pablo G Auffant, P.E., Programs Manager, FAA Orlando Airports District Office, 9677 Tradeport Drive, Suite 130, Orlando, Florida 32827 (407) 648–6583. The application may be reviewed in person at this same location.

SUPPLEMENTARY INFORMATION: The FAA proposes to rule and invites public comment on the application to Impose and Use a PFC at Orlando International Airport Under the provisions of the Aviation Safety and Capacity Expansion Act of 1990 (Title IX of the Omnibus Budget Reconciliation Act of 1990) (Pub. L. 101–508) and part 158 of the Federal Aviation regulations (14 CFR part 158).

On May 25, 1995 the FAA determined that the application to Impose and Use the revenue from a PFC submitted by Greater Orlando Aviation Authority was substantially complete within the requirements of section 158.25 of part 158. The FAA will approve or disapprove the application, in whole or in part, no later than August 24, 1995.

The following is a brief overview of the application.

Level of the proposed PFC: $3.00.

Proposed charge effective date: February 1, 1993.

Proposed charge expiration date: August 1, 1996.

Total estimated PFC revenue: $20,060.000.

Brief description of proposed project(s):

1—Design for North Crossfield Taxiway
2—Preliminary Design for Airside 2 and Related Improvements Reimbursement for PFC Eligible Projects as follows:
3—Construction of Taxiway R–60, Taxiway F–15, and airfield access to the Aircraft Rescue and Fire Fighting Facility
4—Implementation of the Security Improvement Program
5—West Ramp Rehabilitation Design
6—Matching Funds for OIA Master Plan
7—Development of Exhibit A Property Map
8—Replacement for Pumper Engine No. 84
9—Replacement for Airfield Sweeper No. 70353
10—Construction of 24 Sanitary Force Main
11—800 Megahertz Communication System
12—Development of Master Mitigation Plan (conceptual permitting)
13—Development of Mitigation Program (engineering services)
14—Development of Mitigation Program (jurisdictional boundaries)
15—Completion of Main Terminal Northeast Corridor
16—Closeout Services for FAA Grants
17—Retrofit Close Circuit Television Cameras
18—Convert Chillers to Non-CFC Refrigerant
19—FAR Part 150 Noise Study.

Class or classes of air carriers which the public agency has requested not be required to collect PFCs: NONE

Any person may inspect the application in person at the FAA office listed above under **FOR FURTHER INFORMATION CONTACT**.

In addition, any person may, upon a request, inspect the application, notice and other documents germane to the application in person at the Greater Orlando Aviation Authority.

Issued in Orlando, Florida on May 25, 1995.

Charles E. Blair,

Manager, Orlando Airports District Office, Southern Region.

[FR Doc. 95–13496 Filed 6–1–95; 8:45 am]

BILLING CODE 4910–13–M

Notice of Intent To Rule on Application To Impose and Use the Revenue From a Passenger Facility Charge (PFC) at Stewart International Airport, Newburg, New York

AGENCY: Federal Aviation Administration (FAA), DOT.

ACTION: Notice of intent to rule on application.

SUMMARY: The FAA proposes to rule and invites public comment on the application to impose and use the revenue from a PFC at Stewart International Airport under the provisions of the Aviation Safety and Capacity Expansion Act of 1990 (Title IX of the Omnibus Budget Reconciliation Act of 1990) (Public Law 101–508) and Part 158 of the Federal Aviation Regulations (14 CFR Part 158).

DATES: Comments must be received on or before July 3, 1995.

ADDRESSES: Comments on this application may be mailed or delivered in triplicate to the FAA at the following address: Mr. Philip Brito, Manager New York Airports District Office, 600 Old Country Road, Suite 446, Garden City, NY 11530.

In addition, one copy of any comments submitted to the FAA must be mailed or delivered to Mr. Russell B. Vachon, Director of Aviation Division for the New York Department of Transportation, at the following address: 1220 Washington Avenue, Albany, New York 12232.

Air carriers and foreign air carriers may submit copies of written comments previously provided to the New York Department of Transportation under section 158.23 of part 158.

FOR FURTHER INFORMATION CONTACT: Mr. Philip Brito, Manager of the New York Airports District Office, Manager New York Airports District Office, 600 Old Country Road, Suite 446, Garden City, New York 11530. The application may be reviewed in person at this same location.

SUPPLEMENTARY INFORMATION: The FAA proposes to rule and invites public comment on the application to impose and use the revenue from a PFC at Stewart International Airport under the provisions of the Aviation Safety and Capacity Expansion Act of 1990 (Title IX of the Omnibus Budget Reconciliation Act of 1990) (Pub. L. 101–508) and part 158 of the Federal Aviation Regulations (14 CFR part 158).

On April 10, 1995, the FAA determined that the application to impose and use the revenue from a PFC submitted by New York State Department of Transportation was substantially complete within the requirements of section 158.25 of part 158. The FAA will approve or disapprove the application, in whole or in part, no later than July 29, 1995.

The following is a brief overview of the application.

Level of the proposed PFC: $3.00

Proposed charge effective date: November 1, 1995

Proposed charge expiration date: August 1, 2007

Total estimated PFC revenue: $12,757,300

Brief description of proposed projects:

—Acquire Snow Removal Equipment (Impose and Use)

This project includes the procurement of the following equipment; One (1) Twin Dozer Plow with Truck, Four (4) Snow Brooms, One (1) Vacuum Sweeper, Two (2) Roll-over Plows with Sanders and Trucks, One (1) 24′ Plow Truck, One (1) Snow

Broom, One (1) 4,000 Gallon Runway De-Icing Truck, Two (2) 4,000 Ton/Hour Snow Blowers, Two (2) Snow Brooms, Two (2) 19′ Plows with Trucks, Two (2) 19′ Plows with Trucks.

—Terminal Building Expansion (Impose and Use)

This project includes expanding existing ground level space for ticketing offices, baggage makeup and claim, waiting areas, concessions and airport operations and security offices. Also included is the construction of six gates on the second level concourse with passenger waiting areas and loading bridges.

—Replace Southeast Quadrant Fuel Farm (Impose and Use)

This project includes the removal of the existing Southwest Quadrant fuel farm facility and the construction of a replacement at a new location which is directly accessible from the aircraft parking ramp. The replacement facility will have Jet-A fuel storage tanks with a total capacity of 300,000 gallons and expandable to accommodate future storage requirements.

—Runway Approach Protection (Impose and Use)

This project includes land and easement acquisition for Runway 16 Runway Protection Zone (approximately 200 acres) and for Runway 16 approach protection—Phase I and II.

—Storm Water Management Study (Impose and Use)

This project involves conducting an in-depth study/analysis and preliminary design for aircraft and pavement de-icing facilities at the Airport.

—Taxiway C Relocation and Removal of a Portion of Tower Hill (Impose and Use)

This project includes relocation of Taxiway C to the East and widening of existing flightline ramp to facilitate ground maneuvering of aircraft in the vicinity of the passenger terminal. A portion of Tower Hill will be removed as part of this project.

—Field Lighting Control Vault (Impose and Use)

This project includes the construction of a new Airfield Lighting and Power Supply Building.

—Northeast Quadrant Phase III Ramp (Impose and Use)

This project consists of placing approximately 33,000 square yards of asphalt pavement which will extend the existing ramp in the Northeast Quadrant to the North to provide public/transient aircraft parking for the remaining FBO and hangar sites.

—Security Access Control System, Part 107 (Impose and Use)

This project includes the installation of all communication, surveillance, alarm and access control equipment needed to provide control for security of terminal, flightline and remote gates and doors.

—South Cargo Development, Phase I Design (Impose and Use)

This project will provide basic site development design for aircraft and truck access and infrastructure in the South Cargo Area.

—Rehabilitate First Street (Impose and Use)

This project provides for the rehabilitation of First Street (on airport property) from the Circulation Road north to the ARFF Station and south of the Passenger Terminal to Breunig Road.

—6,000 Foot Fence Along NY State Route 17K (Impose and Use)

—Phase III Cargo Ramp Expansion (Impose and Use)

This project includes: (1) The removal of approximately 600,000 cubic yards of earth including some rock excavation, (2) Paving approximately 155,000 sq. ft. of additional aircraft parking ramp including lighting, (3) Rehabilitation, widening, partial re-alignment and lighting of approximately one mile of existing roadway to serve as cargo access.

—Partial Parallel Taxiway, Runway 16/34 and Removal of a Portion of Tower Hill (Impose and Use)

This project includes the construction of a partial parallel Taxiway ''D'' (approx. 75′ × 3,200′) from the intersection with Taxiway ''C'' and ''A'' to the end of Runway 34. This construction will require the removal of a portion of Tower Hill.

—Demolition of Hanger E (Impose and Use)

This project includes the demolition of Hanger E and clearing and remediation of its site.

—Rehabilitate Perimeter Road (Impose and Use)

This project will rehabilitate Perimeter Road from its intersection with First Street to its intersection with the United States Military Academy property line.

—Tower Hill Obstruction Removal (Impose)

This project will remove the remaining portion of Tower Hill after the Ramp Widening and Partial Parallel Taxiway project have been completed.

Class or classes of air carriers which the public agency has requested not be required to collect PFCs: Unscheduled Air Taxi operators operating under Part 135.

Any person may inspect the application in person at the FAA office listed above under FOR FURTHER INFORMATION CONTACT and at the FAA regional Airports office located at: Fitzgerald Federal Building, John F. Kennedy International Airport, Jamaica, New York, 11430.

In addition, any person may, upon request, inspect the application, notice and other documents germane to the application in person at the Stewart International Airport.

Issued in Jamaica, New York on May 23, 1995.

William DeGraaff,

Manager, Planning & Programming Branch, Eastern Region.

[FR Doc. 95–13493 Filed 6–1–95; 8:45 am]

BILLING CODE 4910–13–M

Intent To Rule on Application To Impose and Use the Revenue From a Passenger Facility Charge (PFC) at Syracuse Hancock International Airport, Syracuse, New York

AGENCY: Federal Aviation Administration (FAA), DOT.

ACTION: Notice of intent to rule on application.

SUMMARY: The FAA proposes to rule and invites public comment on the application to impose and use the revenue from a PFC at Syracuse Hancock International Airport under the provisions of the Aviation Safety and Capacity Expansion Act of 1990 (Title IX of the Omnibus Budget Reconciliation Act of 1990) (Pub. L 101–508) and part 158 of the Federal Aviation Regulations (14 CFR part 158).

DATES: Comments must be received on or before July 3, 1995.

ADDRESSES: Comments on this application may be mailed or delivered in triplicate to the FAA at the following address: Mr. Philip Brito, Manager New York Airports District Office, 600 Old Country Road, Suite 446, Garden City, NY, 11530.

In addition, one copy of any comments submitted to the FAA must be mailed or delivered to Mr. Charles Everett, Commissioner of Aviation, Division for the City of Syracuse Department of Aviation, Syracuse Hancock International Airport, Syracuse, New York 13212.

Air carriers and foreign air carriers may submit copies of written comments

previously provided to the City of Syracuse Department of Aviation under section 158.23 of part 158.

FOR FURTHER INFORMATION CONTACT: Mr. Philip Brito, Manager of the New York Airports District Office, Manager New York Airports District Office, 600 Old Country Road, Suite 446, Garden City, New York, 11530.

The application may be reviewed in person at this same location.

SUPPLEMENTARY INFORMATION: The FAA proposes to rule and invites public comment on the application to impose and use the revenue from a PFC at Syracuse Hancock International Airport under the provisions of the Aviation Safety and Capacity Expansion Act of 1990 (Title IX of the Omnibus Budget Reconciliation Act of 1990) (Pub. L. 101–508) and part 158 of the Federal Aviation Regulations (14 CFR part 158).

On April 28, 1995, the FAA determined that the application to impose and use the revenue form a PFC submitted by the City of Syracuse Department of Aviation was substantially complete within the requirements of section 158.25 of part 158. The FAA will approve or disapprove the application, in whole or in part, no later than July 26, 1995.

The following is a brief overview of the application.

Level of the proposed PFC: $3.00

Proposed charge effective date: July 1, 1995

Proposed charge expiration date: June 30, 1998

Total estimated PFC revenue: $9,699,050

Brief description of proposed projects:

—Terminal Area DeIcing Collection and Concrete Parking Pads (Impose and Use)

This project includes the installation of a glycol based de-icing fluid collection system within the air carrier terminal apron to collect de-icing fluid runoff and the installation of Portland Cement Concrete pavement surrounding the north and south concourse.

—Relocate Taxiway H West and Widen Taxiway J and Taxiway H East (Impose and Use)

This project includes construction of Parallel Taxiway ''H'' from Taxiway ''N'' to Runway 10 (approx. 2500′ × 75′), the widening of Taxiway ''J'' (approx. 750 × 50), and Taxiway ''H'' from Taxiway ''J'' to Taxiway ''M''.

—Land Acquisition For Parallel Runway 10L–28R (Impose)

This project includes the acquisition in fee of approximately 225 acres of federal and privately owned land to accommodate future Runway 10L–28R and runway protection zones at the ultimate length.

Class or classes of air carriers which the public agency has requested not be required to collect PFCs: Air Taxi/Commercial operators filing FAA Form 1800–31.

Any person may inspect the application in person at the FAA office listed above under **FOR FURTHER INFORMATION CONTACT** and at the FAA regional Airports office located at Fitzgerald Federal Building, John F. Kennedy International Airport, Jamaica, New York, 11430.

In addition, any person may, upon request, inspect the application, notice and other documents germane to the application in person at the Syracuse Hancock International Airport.

Issued in Jamaica, New York on May 23, 1995.

William DeGraaff,

Manager, Planning & Programming Branch, Eastern Region.

[FR Doc. 95–13494 Filed 6–1–95; 8:45 am]

BILLING CODE 4910–13–M

DEPARTMENT OF VETERANS AFFAIRS

Information Collection Under OMB Review

AGENCY: Veterans Benefits Administration, Department of Veterans Affairs.

ACTION: Notice.

The Veterans Benefits Administration (VBA), Department of Veterans Affairs, has submitted to OMB the following proposals for the collection of information under the provisions of the Paperwork Reduction Act (44 U.S.C. Chapter 35). This document lists the following information: (1) The title of the information collection, and the Department form number; (2) a description of the need and its use; (3) who will be required or asked to respond; (4) an estimate of the total annual reporting hours and recordkeeping burden; (5) the estimated average burden hours per respondent; (6) the frequency of response; and (7) an estimated number of respondents.

ADDRESSES: Copies of the proposed information collections and supporting documents may be obtained from Trish Fineran, Veterans Benefits Administration (20M30), Department of Veterans Affairs, 8l0 Vermont Avenue NW., Washington, DC 20420, (202) 273–6886.

Comments and recommendations concerning the proposed information collections should be directed to VA's OMB Desk Officer, Allison Eydt , OMB Human Resources and Housing Branch, New Executive Office Building, Room 10235, Washington, DC 20503 (202) 395–4650. DO NOT send requests for benefits to this address.

DATES: Comments on the proposed information collections should be directed to the OMB Desk Officer within 30 days of this notice.

Dated: April 24, 1995.

By direction of the Secretary.

Valerie Gray Durkin,

Management Analyst.

Reinstatement, Without Change, of a Previously Approved Collection for Which Approval Has Expired

1. Veterans Mortgage Life Insurance Inquiry, VA Form 29–0543
2. The form is used by Veterans Benefits Administration to request information for the proper maintenance of Veterans Mortgage Life Insurance accounts
3. Individuals or households
4. 45 hours
5. 5 minutes
6. On occasion
7. 540 respondents

Reinstatement, Without Change, of a Previously Approved Collection for Which Approval Has Expired

1. Application for Supplemental Service Disabled Veterans (RH) Life Insurance, VA Form 29–0188
2. The form is used by veterans to apply for Supplemental Service Disabled Veterans Insurance. The information is used by Veterans Benefits Administration to determine eligibility for insurance
3. Individuals or households
4. 3,333 hours
5. 20 minutes
6. On occasion
7. 10,000 respondents

Reinstatement, Without Change, of a Previously Approved Collection for Which Approval Has Expired

1. Application for Exclusion of Children's Income, VA Form 21–0571
2. The form is used by Veterans Benefits Administration to collect the information needed to determine whether a child's income can be excluded from consideration in determining a parent's eligibility for nonservice-connected pension.
3. Individuals or households
4. 18,750 hours
5. 45 minutes
6. On occasion
7. 25,000 respondents

Extension of a Currently Approved Collection

1. Matured Endowment Notification, VA Form 29–5767
2. The form is used to notify the insured that his/her endowment policy has matured and to solicit the desired disposition of the proceeds of the policy. The information is used by Veterans Benefits Administration to process the insured's request.
3. Individuals or households
4. 2,838 hours
5. 20 minutes
6. On occasion
7. 8,600 respondents

Extension of a Currently Approved Collection

1. Certification of Delivery of Advance Payment and Enrollment, VA Form 22–1999V
2. The form is used by educational institutions' certifying officials to certify delivery of advance payment and to report any changes in enrollment status. The information is used by Veterans Benefits Administration to determine if advance payment of benefits has been properly delivered and if the veteran's or other eligible person's education benefits are to be increased, decreased, or terminated, and if so, the effective date of change
3. Business or other for-profit—Not-for-profit institution—State, Local or Tribal Government
4. 3,787 hours
5. 5 minutes
6. On occasion
7. 7,635 respondents

Extension of a Currently Approved Collection

1. Statement of Purchaser or Owner Assuming Seller's Loan, VA Form 26–6382
2. The form is completed by purchasers who are assuming veterans' guaranteed, insured, and direct home loans. The information is used by Veterans Benefits Administration to make determinations for release of liability and substitution of entitlement.
3. Individuals or households
4. 3,000 hours
5. 15 minutes
6. On occasion
7. 9,000 respondents

Revision of a Currently Approved Collection

1. Claim Under Loan Guaranty, VA Form 26–1874, and Supplemental Claim Form—Adjustable Rate Mortgages, VA Form 26–1874a
2. VA Form 261874 is used by lenders and holders of VA guaranteed home loans as the notification to VA of default on such loans. VA Form 26–1874a will be used by lenders and holders of VA loans as an attachment to VA Form 26–1874 when filing a claim under the loan guaranty resulting from the termination of an Adjustable Rate Mortgage loan. The information is used by Veterans Benefits Administration in determining the amount owed the holder under the guaranty.
3. Business or other for-profit
4. Estimate of the Total Annual Reporting Hours—26,139 hours
   a. VA Form 26–1874—25,806 hours
   b. VA Form 26–1874a—333 hours
5. Estimated Average Burden Hours Per Respondent—59 minutes average
   a. VA Form 26–1874—60 minutes
   b. VA Form 26–1874a—20 minutes
6. On occasion
7. Estimated Number of Respondents—26,806 respondents
   a. VA Form 26–1874—25,806 respondents
   b. VA Form 26–1874a—1,000 respondents

[FR Doc. 95–13469 Filed 6–1–95; 8:45 am]

BILLING CODE 8320–01–P

Information Collection Under OMB Review: National Health Survey of Persian Gulf War Era Veterans VA Form 10–20986(NR)

AGENCY: Veterans Health Administration, Department of Veterans Affairs.

ACTION: Notice.

The Veterans Health Administration (VHA), Department of Veterans Affairs, has submitted to OMB the following proposal for the collection of information under the provisions of the Paperwork Reduction Act (44 U.S.C. Chapter 35). This document lists the following information: (1) The title of the information collection, and the Department form number; (2) a description of the need and its use; (3) who will be required or asked to respond; (4) an estimate of the total annual reporting hours and recordkeeping burden; (5) the estimated average burden hours per respondent; (6) the frequency of response; and (7) an estimated number of respondents.

ADDRESSES: Copies of the proposed information collections and supporting documents may be obtained from Ann Bickoff, Veterans Health Administration (161B4), Department of Veterans Affairs, 810 Vermont Avenue NW, Washington, DC 20420, (202) 565–7407.

Comments and recommendations concerning the proposed information collections should be directed to VA's OMB Desk Officer, Allison Eydt, OMB Human Resources and Housing Branch, New Executive Office Building, Room 10235, Washington, DC 20503 (202) 395–4650. DO NOT send requests for benefits to this address.

DATES: Comments on the information collection should be directed to the OMB Desk Officer within 30 days of this notice.

Dated: May 24, 1995.

Valerie Gray Durkin,
Management Analyst.

New Collection

1. National Health Survey of Persian Gulf War Era Veterans, VA Form 10–20986(NR)
2. The survey will be used to estimate and compare the prevalence of various symptoms and other health outcomes among Persian Gulf War veterans and their family members, and those of non-Persian Gulf veterans. A sample of respondents will be invited to take a physical examination. The information will be used by Veterans Health Administration in formulating VA policies regarding Persian Gulf veterans.
3. Individuals or households
4. Total Annual Hours Requested—22,500 hours
   a. VA Form 10–20986(NR)—10,500 hours
   b. Physical Examination—12,000 hours
5. Estimated Average Burden Hours Per Respondent
   a. VA Form 10–20986(NR)—30 minutes
   b. Physical Examination—6 hours
6. One-time
7. Estimated Number of Respondents—21,000.

[FR Doc. 95–13470 Filed 6–1–95; 8:45 am]

BILLING CODE 8320–01–M

Sunshine Act Meetings

Federal Register
Vol. 60, No. 106
Friday, June 2, 1995

This section of the FEDERAL REGISTER contains notices of meetings published under the ''Government in the Sunshine Act'' (Pub. L. 94-409) 5 U.S.C. 552b(e)(3).

ASSASSINATION RECORDS REVIEW BOARD

TIME AND DATE: 9:00 a.m., June 7, 1995.

PLACE: 600 E Street, NW., Second Floor, Washington, D.C. 20530.

STATUS: Closed.

MATTERS TO BE CONSIDERED: Review of documents postponed in part or in full by federal agencies under the standards of the Assassination Records Collection Act of 1992, 44 U.S.C. § 2107 note.

CONTACT PERSON FOR MORE INFORMATION: Thomas Samoluk, Press and Public Affairs Officer, 600 E Street, NW, Second Floor, Washington, D.C. 20530. Telephone: (202) 724–0088; Fax: (202) 724–0457.

David G. Marwell,

Executive Director.

[FR Doc. 95–13639 Filed 5–31–95; 10:00 am]

BILLING CODE 6820–TD–M

COMMODITY FUTURES TRADING COMMISSION

TIME AND DATE: 11:30 a.m., Friday, June 16, 1995.

PLACE: 2033 K St. NW., Washington, DC, 8th Floor Hearing Room.

STATUS: Closed.

MATTERS TO BE CONSIDERED: Enforcement Matters.

CONTACT PERSON FOR MORE INFORMATION: Jean A. Webb, 202–254–6314.

Jean A. Webb,

Secretary of the Commission.

[FR Doc. 95–13697 Filed 5–31–95; 2:52 pm]

BILLING CODE 6351–01–M

COMMODITY FUTURES TRADING COMMISSION

TIME AND PLACE: 10 a.m., Tuesday, June 27, 1995.

PLACE: 2033 K St., NW., Washington, DC, 8th Floor Hearing Room.

STATUS: Closed.

MATTERS TO BE CONSIDERED: Enforcement Matters.

CONTACT PERSON FOR MORE INFORMATION: Jean A. Webb, 202–254–6314.

Jean A. Webb,

Secretary of the Commission.

[FR Doc. 95–13698 Filed 5–31–95; 2:52 pm]

BILLING CODE 6351–01–M

COMMODITY FUTURES TRADING COMMISSION

TIME AND DATE: 10:00 a.m., Thursday, June 29, 1995.

PLACE: 2033 K St., N.W., Washington, D.C., Lower Level Hearing Room.

STATUS: Open.

MATTERS TO BE CONSIDERED: Amendments to Part 4, Commodity Pool Operator and Commodity Trading Advisor Disclosure Rules.

CONTACT PERSON FOR MORE INFORMATION: Jean A. Webb, 202–254–6314.

Jean A. Webb,

Secretary of the Commission.

[FR Doc. 95–13699 Filed 5–31–95; 2:52 pm]

BILLING CODE 6351–01–M

COMMODITY FUTURES TRADING COMMISSION

TIME AND DATE: 10:30 a.m., Thursday, June 29, 1995.

PLACE: 2033 K St., NW., Washington, DC, 8th Floor Hearing Room.

STATUS: Closed.

MATTERS TO BE CONSIDERED: Enforcement Matters.

CONTACT PERSON FOR MORE INFORMATION: Jean A. Webb, 202–254–6314.

Jean A. Webb,

Secretary of the Commission.

[FR Doc. 95–13700 Filed 5–31–95; 2:52 pm]

BILLING CODE 6351–01–M

FEDERAL DEPOSIT INSURANCE CORPORATION

Pursuant to the provisions of the ''Government in the Sunshine Act'' (5 U.S.C. 552b), notice is hereby given that at 10:04 a.m. on Tuesday, May 30, 1995, the Board of Directors of the Federal Deposit Insurance Corporation met in closed session to consider matters relating to the Corporation's corporate and supervisory activities.

In calling the meeting, the Board determined, on motion of Vice Chairman Andrew C. Hove, Jr., seconded by Director Jonathan L. Fiechter (Acting Director, Office of Thrift Supervision), concurred in by Director Eugene A. Ludwig (Comptroller of the Currency) and Chairman Ricki Helfer, that Corporation business required its consideration of the matters on less than seven days' notice to the public; that no earlier notice of the meeting was practicable; that the public interest did not require consideration of the matters in a meeting open to public observation; and that the matters could be considered in a closed meeting by authority of subsections (c)(4), (c)(6), (c)(8), (c)(9)(A)(ii), (c)(9)(B), and (c)(10) of the ''Government in the Sunshine Act'' (5 U.S.C. 552b(c)(4), (c)(6), (c)(8), (c)(9)(A)(ii), (c)(9)(B), and (c)(10)).

The meeting was held in the Board Room of the FDIC Building located at 550–17th Street, N.W., Washington, D.C.

Dated: May 30, 1995.

Federal Deposit Insurance Corporation.

Leneta G. Gregorie,

Acting Assistant Executive Secretary.

[FR Doc. 95–13645 Filed 5–31–95; 2:52 pm]

BILLING CODE 6714–01–M

FEDERAL MINE SAFETY AND HEALTH REVIEW COMMISSION

TIME AND DATE: 10:00 a.m., Thursday, June 1, 1995.

PLACE: 6th Floor, 1730 K Street, NW., Washington, DC.

STATUS: Open.

MATTERS TO BE CONSIDERED: The Commission will hear oral argument on the following:

1. *Morton International, Inc., Morton Salt,* Docket No. CENT 93–237–RM, etc.

(Issues include whether the judge erred in concluding that 30 CFR §§ 57.22232 and 57.22235(a) do not apply to abandoned areas.)

Any person attending this oral argument who requires special accessibility features and/or auxiliary aids, such as sign language interpreters, must inform the Commission in advance of those needs. Subject to 29 CFR 2706.150–(a)(3) and 2706.160(e).

TIME AND DATE: Immediately following oral argument.

STATUS: Closed [Pursuant to 5 U.S.C. 552b(c)(10)].

MATTERS TO BE CONSIDERED: The Commission will consider and act upon the following:

1. *Morton International, Inc., Morton Salt,* Docket No. CENT 93–237–RM, etc. (see item 1 above)

It was determined by a majority vote of Commissioners that this meeting be held in closed session.

CONTACT PERSON FOR MORE INFORMATION: Jean Ellen (202) 653–5629/for toll free TDD Relay/1–800–877–8339.

Jean H. Ellen,

Chief Docket Clerk.

[FR Doc. 95–13617 Filed 5–31–95; 10:00 am]

BILLING CODE 6735–01–M

BOARD OF GOVERNORS OF THE FEDERAL RESERVE SYSTEM

''FEDERAL REGISTER'' CITATION OF PREVIOUS ANNOUNCEMENT: 60 FR 28437, May 31, 1995.

PREVIOUSLY ANNOUNCED TIME AND DATE OF THE MEETING: 11:00 a.m., Monday, June 5, 1995.

CHANGES IN THE MEETING: Addition of the following closed item(s) to the meeting: Federal Reserve Bank and Branch director appointments.

CONTACT PERSON FOR MORE INFORMATION: Mr. Joseph R. Coyne, Assistant to the Board; (202) 452–3204.

Dated: May 31, 1995.

Jennifer J. Johnson,

Deputy Secretary of the Board.

[FR Doc. 95-13720 Filed 5–31–95; 3:34 pm]

BILLING CODE 6210–01–P

OVERSEAS PRIVATE INVESTMENT CORPORATION

Board of Directors Meeting

TIME AND DATE: Tuesday, June 13, 1995 1:00 P.M. (Open Portion), 1:30 P.M. (Closed Portion).

PLACE: Offices of the Corporation Twelfth Floor Board Room, 1100 New York Avenue, N.W., Washington, D.C.

STATUS: Meeting Open to the Public from 1:00 P.M. to 1:30 P.M. Closed portion will commence at 1:30 P.M. (approx.)

MATTERS TO BE CONSIDERED:

1. President's Report
2. New Appointment
3. Approval of 03/28/95 Minutes (Open Portion)
4. Meeting schedule through December 1995

FURTHER MATTERS TO BE CONSIDERED: (Closed to the Public 1:30 P.M.)

1. Insurance Project in Peru
2. Insurance Project in Brazil
3. Finance Project in Brazil
4. Finance and Insurance Project in the Philippines
5. Insurance Project in India
6. Finance Project in Russia
7. Finance Project in the NIS
8. Finance Project in the NIS
9. Insurance Project in Ghana
10. Pending Major Projects
11. Approval of the 03/28/95 Minutes (Closed Portion)

CONTACT PERSON FOR INFORMATION: Information on the meeting may be obtained from Jane Chalmers at (202) 336–8421.

Dated: May 30, 1995.

Jane H. Chalmers,

Deputy General Counsel.

[FR Doc. 95–13608 Filed 5–30–95; 4:14 pm]

BILLING CODE 3210–01–M

Corrections

Federal Register

Vol. 60, No. 106

Friday, June 2, 1995

This section of the FEDERAL REGISTER contains editorial corrections of previously published Presidential, Rule, Proposed Rule, and Notice documents. These corrections are prepared by the Office of the Federal Register. Agency prepared corrections are issued as signed documents and appear in the appropriate document categories elsewhere in the issue.

DEPARTMENT OF AGRICULTURE

Animal and Plant Health Inspection Service

9 CFR Part 3

[Docket No. 93-076-3]

Marine Mammal Negotiated Rulemaking Advisory Committee; Establishment

Correction

In proposed rule document 95–12434 beginning on page 27049 in the issue of Monday, May 22, 1995, make the following corrections:

On page 27050, in the first column, in the second full paragraph, in the fifth line, and in the third full paragraph, in the third line, ''human'' should read ''humane'' each time it appears.

BILLING CODE 1505–01–D

DEPARTMENT OF COMMERCE

Foreign-Trade Zones Board

[Docket 23-95]

Proposed Foreign-Trade Zone—Ocala/Marion County, Florida; Application and Public Hearing

Correction

In notice document 95–12498 beginning on page 27077 in the issue of Monday, May 22, 1995, make the following correction:

On page 27078, in the first column, in the third full paragraph, beginning in the second line from the bottom, ''(to [75 days from date of publication])'' should read ''(to August 7, 1995)''.

BILLING CODE 1505–01–D

DEPARTMENT OF TRANSPORTATION

Coast Guard

33 CFR Part 164

[CGD 83-043]
RIN 2115-AB41

Incorporation of Amendments to the International Convention for Safety of Life at Sea, 1974

Correction

In rule document 95–10921 beginning on page 24767 in the issue of Wednesday, May 10, 1995, make the following correction:

§ 164.35 [Corrected]

On page 24771, in the third column, in § 164.35(o), in the fifth line, ''1991'' should read ''1995''.

BILLING CODE 1505–01–D

DEPARTMENT OF TRANSPORTATION

Federal Aviation Administration

Notice of Intent To Rule on Applications To Impose and Use the Revenue From a Passenger Facility Charge (PFC) at John F. Kennedy International Airport, Jamaica, NY; La Guardia Airport (LGA), Flushing, NY, and Newark International Airport (EWR), Newark, NJ

Correction

In notice document 95– 12754 appearing on page 27592 in the issue of Wednesday, May 24, 1995, make the follwing corrections:

1. In the second column, in the twenty-first and twenty-second lines, ''July 9, 1995'' should read ''July 29, 1995''.

2. In the third column, in the file line, ''FR Doc. 95-1754'' should read ''FR Doc. 95-12754''.

BILLING CODE 1505–01–D

federal register

Friday
June 2, 1995

Part II

Department of Health and Human Services

Health Care Financing Administration

42 CFR Parts 412, 413, et al.

Medicare Program; Changes to the Hospital Inpatient Prospective Payment Systems and Fiscal Year 1996 Rates; Proposed Rule

DEPARTMENT OF HEALTH AND HUMAN SERVICES

Health Care Financing Administration

42 CFR Parts 412, 413, 424, 485, and 489

[BPD–825–P]

RIN 0938–AG95

Medicare Program; Changes to the Hospital Inpatient Prospective Payment Systems and Fiscal Year 1996 Rates

AGENCY: Health Care Financing Administration (HCFA), HHS.

ACTION: Proposed rule.

SUMMARY: We are proposing to revise the Medicare hospital inpatient prospective payment systems for operating costs and capital-related costs to implement necessary changes arising from our continuing experience with the system. In addition, in the addendum to this proposed rule, we are describing proposed changes in the amounts and factors necessary to determine prospective payment rates for Medicare hospital inpatient services for operating costs and capital-related costs. These changes would be applicable to discharges occurring on or after October 1, 1995. We are also setting proposed rate-of-increase limits as well as proposing policy changes for hospitals and hospital units excluded from the prospective payment systems.

DATES: Comments will be considered received at the appropriate address, as provided below, no later than 5 p.m. on August 1, 1995.

ADDRESSES: Mail written comments (an original and 3 copies) to the following address: Health Care Financing Administration, Department of Health and Human Services, Attention: BPD–825–P, P.O. Box 7517, Baltimore, MD 21207–0517.

If you prefer, you may deliver your written comments (an original and 3 copies) to one of the following addresses:

Room 309–G, Hubert H. Humphrey Building, 200 Independence Avenue, SW., Washington, DC 20201, or

Room 132, East High Rise Building, 6325 Security Boulevard, Baltimore, MD 21207.

Because of staffing and resource limitations, we cannot accept comments by facsimile (FAX) transmission. In commenting, please refer to file code BPD–825–P. Comments received timely will be available for public inspection as they are received, generally beginning approximately 3 weeks after publication of a document, in Room 309–G of the Department's offices at 200 Independence Avenue, SW., Washington, DC, on Monday through Friday of each week from 8:30 a.m. to 5 p.m. (phone: (202) 690–7890).

For comments that relate to information collection requirements, mail a copy of comments to: Office of Information and Regulatory Affairs, Office of Management and Budget, Room 10235, New Executive Office Building, Washington, DC 20503, Attn: Allison Herron Eydt, HCFA Desk Officer.

Copies: To order copies of the **Federal Register** containing this document, send your request to: New Orders, Superintendent of Documents, P.O. Box 371954, Pittsburgh, PA 15250–7954. Specify the date of the issue requested and enclose a check or money order payable to the Superintendent of Documents, or enclose your Visa or Master Card number and expiration date. Credit card orders can also be placed by calling the order desk at (202) 512–1800 or by faxing to (202) 512–2250. The cost for each copy is $8.00. As an alternative, you can view and photocopy the **Federal Register** document at most libraries designated as Federal Depository Libraries and at many other public and academic libraries throughout the country that receive the **Federal Register**.

To obtain data used in deriving the standardized amounts and DRG relative weights, see section VIII.B of the Supplementary Information section of this preamble, Requests for Data From the Public.

FOR FURTHER INFORMATION CONTACT:

Nancy Edwards (410) 966–4532, Operating Prospective Payment, DRG, Wage Index Issues.

Tzvi Hefter (410) 966–4529, Capital Prospective Payment, Excluded Hospitals, EACH, RPCH.

SUPPLEMENTARY INFORMATION:

I. Background

A. Summary

Under section 1886(d) of the Social Security Act (the Act), a system of payment for the operating costs of acute care hospital inpatient stays under Medicare Part A (Hospital Insurance) based on prospectively-set rates was established effective with hospital cost reporting periods beginning on or after October 1, 1983. Under this system, Medicare payment for hospital inpatient operating costs is made at a predetermined, specific rate for each hospital discharge. All discharges are classified according to a list of diagnosis-related groups (DRGs). The regulations governing the hospital inpatient prospective payment system are located in 42 CFR part 412. On September 1, 1994, we published a final rule with comment period (59 FR 45330) to implement changes to the prospective payment system for hospital operating costs beginning with Federal fiscal year (FY) 1995. We invited comments only on certain revisions to the criteria for geographic reclassification by the Medicare Geographic Classification Review Board (MGCRB). We did not receive any timely comments in response to the September 1, 1994 final rule with comment period. Therefore, we are confirming the provisions of that rule as final and are not publishing another final rule.

For cost reporting periods beginning before October 1, 1991, hospital inpatient operating costs were the only costs covered under the prospective payment system. Payment for capital-related costs had been made on a reasonable cost basis because, under sections 1886(a)(4) and (d)(1)(A) of the Act, those costs had been specifically excluded from the definition of inpatient operating costs. However, section 4006(b) of the Omnibus Budget Reconciliation Act of 1987 (Public Law 100–203) revised section 1886(g)(1) of the Act to require that, for hospitals paid under the prospective payment system for operating costs, capital-related costs would also be paid under a prospective payment system effective with cost reporting periods beginning on or after October 1, 1991. As required by section 1886(g) of the Act, we replaced the reasonable cost-based payment methodology with a prospective payment methodology for hospital inpatient capital-related costs. Under the new methodology, effective for cost reporting periods beginning on or after October 1, 1991, a predetermined payment amount per discharge is made for Medicare inpatient capital-related costs. (See subpart M of 42 CFR part 412, and the August 30, 1991, final rule (56 FR 43358) for a complete discussion of the prospective payment system for hospital inpatient capital-related costs.)

B. Major Contents of This Proposed Rule

In this proposed rule, we are setting forth proposed changes to the Medicare hospital inpatient prospective payment systems for both operating costs and capital-related costs. This proposed rule would be effective for discharges occurring on or after October 1, 1995. Following is a summary of the major changes that we are proposing to make:

1. Changes to the DRG Classifications and Relative Weights

As required by section 1886(d)(4)(C) of the Act, we must adjust the DRG classifications and relative weights at least annually. Our proposed changes for FY 1996 are set forth in section II of this preamble.

2. Changes to the Hospital Wage Index

In section III of this preamble, we discuss revisions to the wage index and the annual update of the wage data. Specific issues addressed in this section include:

- FY 1996 wage index update.
- Allocation of general service salaries and hours to excluded areas.
- Revisions to the wage index based on hospital redesignations.
- Criteria for seeking MGCRB reclassification.
- Alternative labor market areas.

3. Other Changes to the Prospective Payment System for Inpatient Operating Costs

In section IV of this preamble, we discuss several provisions of the regulations in 42 CFR parts 412, 424, and 485 and set forth certain proposed changes concerning the following:

- Payment for transfer cases.
- Rural referral centers.
- Determination of number of beds in determining the indirect medical education adjustment.
- Disproportionate share adjustment.
- Essential access community hospitals (EACHs) and rural primary care hospitals (RPCHs).
- Rebasing the hospital market baskets.

4. Changes and Clarifications to the Prospective Payment System for Capital-Related Costs

In section V of this preamble, we discuss several provisions of the regulations in 42 CFR part 412 and set forth certain proposed changes concerning the following:

- New update framework.
- Specific adjustment for taxes to the capital prospective payment system Federal rate.

5. Changes for Hospitals and Hospital Units Excluded From the Prospective Payment Systems

In section VI of this preamble, we discuss changes to the regulations at 42 CFR parts 412 and 413 for hospitals and hospital units excluded from the prospective payment system. The proposed changes concern the following:

- Requirements for certain long-term care hospitals excluded from the prospective payment systems.
- Payment window for preadmission services.
- Criteria for exclusion.
- Request for payment adjustment.

6. Determining Prospective Payment Rates and Rate-of-Increase Limits

In the addendum to this proposed rule, we set forth proposed changes to the amounts and factors for determining the FY 1996 prospective payment rates for operating costs and capital-related costs. We are also proposing new update factors for determining the rate-of-increase limits for cost reporting periods beginning in FY 1996 for hospitals and hospital units excluded from the prospective payment system.

7. Impact Analysis

In Appendix A, we set forth an analysis of the impact that the proposed changes described in this rule would have on affected entities.

8. Capital Acquisition Model

Appendix B contains the technical appendix on the proposed FY 1996 capital acquisition model.

9. Report to Congress on the Update Factor for Prospective Payment Hospitals and Hospitals Excluded From the Prospective Payment System

Section 1886(e)(3)(B) of the Act requires that the Secretary report to Congress no later than March 1, 1995 on our initial estimate of an update factor for FY 1996 for both hospitals included in and hospitals excluded from the prospective payment systems. This report is included as Appendix C to this proposed rule.

10. Proposed Recommendation of Update Factor for Hospital Inpatient Operating Costs

As required by sections 1886 (e)(4) and (e)(5) of the Act, Appendix D provides our recommendation of the appropriate percentage change for FY 1996 for the following:

- Large urban area and other area average standardized amounts (and hospital-specific rates applicable to sole community hospitals) for hospital inpatient services paid for under the prospective payment system for operating costs.
- Target rate-of-increase limits to the allowable operating costs of hospital inpatient services furnished by hospitals and hospital units excluded from the prospective payment system.

11. Discussion of Prospective Payment Assessment Commission Recommendations

The Prospective Payment Assessment Commission (ProPAC) is directed by section 1886(e)(2)(A) of the Act to make recommendations on the appropriate percentage change factor to be used in updating the average standardized amounts. In addition, section 1886(e)(2)(B) of the Act directs ProPAC to make recommendations regarding changes in each of the Medicare payment policies under which payments to an institution are prospectively determined. In particular, the recommendations relating to the hospital inpatient prospective payment systems are to include recommendations concerning the number of DRGs used to classify patients, adjustments to the DRGs to reflect severity of illness, and changes in the methods under which hospitals are paid for capital-related costs. Under section 1886(e)(3)(A) of the Act, the recommendations required of ProPAC under sections 1886(e)(2) (A) and (B) of the Act are to be reported to Congress not later than March 1 of each year.

We are printing ProPAC's March 1, 1995 report, which includes its recommendations, as Appendix E of this document. The recommendations, and the actions we are proposing to take with regard to them (when an action is recommended), are discussed in detail in the appropriate sections of this preamble, the addendum, or the appendices to this proposed rule. See section VII of this preamble for specific information concerning where individual recommendations are addressed. For a brief summary of the ProPAC recommendations, we refer the reader to the beginning of the ProPAC report as set forth in Appendix E of this proposed rule. ProPAC also produced technical appendices in its March 1, 1995 report that provide background material and detailed analyses used in preparation of the ProPAC recommendations. For further information relating specifically to the ProPAC report or to obtain a copy of the technical appendices, contact ProPAC at (202) 401–8986.

II. Proposed Changes to DRG Classifications and Relative Weights

A. Background

Under the prospective payment system, we pay for inpatient hospital services on the basis of a rate per discharge that varies by the DRG to which a beneficiary's stay is assigned. The formula used to calculate payment for a specific case takes an individual hospital's payment rate per case and multiplies it by the weight of the DRG to which the case is assigned. Each DRG weight represents the average resources required to care for cases in that

particular DRG relative to the average resources used to treat cases in other DRGs.

Congress recognized that it would be necessary to recalculate the DRG relative weights periodically to account for changes in resource consumption. Accordingly, section 1886(d)(4)(C) of the Act requires that the Secretary adjust the DRG classifications and relative weights annually. These adjustments are made to reflect changes in treatment patterns, technology, and any other factors that may change the relative use of hospital resources. The proposed changes to the DRG classification system and the proposed recalibration of the DRG weights for discharges occurring on or after October 1, 1995 are discussed below.

B. DRG Reclassification

1. General

Cases are classified into DRGs for payment under the prospective payment system based on the principal diagnosis, up to eight additional diagnoses, and up to six procedures performed during the stay, as well as age, sex, and discharge status of the patient. The diagnosis and procedure information is reported by the hospital using codes from the International Classification of Diseases, Ninth Edition, Clinical Modification (ICD–9–CM). The Medicare fiscal intermediary enters the information into its claims system and subjects it to a series of automated screens called the Medicare Code Editor (MCE). These screens are designed to identify cases that require further review before classification into a DRG can be accomplished.

After screening through the MCE and any further development of the claims, cases are classified by the GROUPER software program into the appropriate DRG. The GROUPER program was developed as a means of classifying each case into a DRG on the basis of the diagnosis and procedure codes and demographic information (that is, sex, age, and discharge status). It is used both to classify past cases in order to measure relative hospital resource consumption to establish the DRG weights and to classify current cases for purposes of determining payment. The records for all Medicare hospital inpatient discharges are maintained in the Medicare Provider Analysis and Review (MedPAR) file. The data in this file are used to evaluate possible DRG classification changes and to recalibrate the DRG weights.

Currently, cases are assigned to one of 492 DRGs in 25 major diagnostic categories (MDCs). Most MDCs are based on a particular organ system of the body (for example, MDC 6, Diseases and Disorders of the Digestive System); however, some MDCs are not constructed on this basis since they involve multiple organ systems (for example, MDC 22, Burns).

In general, principal diagnosis determines MDC assignment. However, there are five DRGs to which cases are assigned on the basis of procedure codes rather than first assigning them to an MDC based on the principal diagnosis. These are the DRGs for liver, bone marrow, and lung transplant (DRGs 480, 481, and 495, respectively) and the two DRGs for tracheostomies (DRGs 482 and 483). Cases are assigned to these DRGs before classification to an MDC.

Within most MDCs, cases are then divided into surgical DRGs (based on a surgical hierarchy that orders individual procedures or groups of procedures by resource intensity) and medical DRGs. Medical DRGs generally are differentiated on the basis of diagnosis and age. Some surgical and medical DRGs are further differentiated based on the presence or absence of complications or comorbidities (hereafter CC).

Generally, GROUPER does not consider other procedures; that is, nonsurgical procedures or minor surgical procedures generally not performed in an operating room are not listed as operating room (OR) procedures in the GROUPER decision tables. However, there are a few non-OR procedures that do affect DRG assignment for certain principal diagnoses, such as extracorporeal shock wave lithotripsy for patients with a principal diagnosis of urinary stones.

The changes we are proposing to make to the DRG classification system for FY 1996 and other decisions concerning DRGs are set forth below.

2. MDC 5 (Diseases and Disorders of the Circulatory System)

a. Automatic Implantable Cardioverter Defibrillator (AICD) Procedures (DRG 116). For several years, we have received correspondence regarding the appropriate DRG assignment of certain procedures involving automatic implantable cardioverter defibrillators (AICDs). When a patient whose principal diagnosis is classified to MDC 5 (Diseases and Disorders of the Circulatory System) receives a total AICD system implant or replacement (procedure code 37.94), the case is assigned to DRG 104 or 105 (Cardiac Valve Procedures With or Without Cardiac Catheterization). However, for discharges occurring before October 1, 1992, if a procedure was performed that involved the implantation or replacement of only part of the AICD system (that is, replacement or implant of either the leads or pulse generator only), the case was assigned to DRG 120 (Other Circulatory System OR Procedures). Effective with discharges occurring on or after October 1, 1992, these procedures were reclassified to DRG 116 (Other Permanent Cardiac Pacemaker Implant or AICD Lead or Generator Procedure).

As we stated in the September 1, 1994, final rule (59 FR 45347), we have continued to monitor the appropriate placement of the AICD cases that are currently assigned to DRG 116. The AICD cases are represented by the following procedure codes: 37.95 (Implantation of automatic cardioverter/defibrillator lead(s) only), 37.96 (Implantation of automatic cardioverter/defibrillator pulse generator only), 37.97 (Replacement of automatic cardioverter/defibrillator lead(s) only), 37.98 (Replacement of automatic cardioverter/defibrillator pulse generator only). Some hospitals and the manufacturer of the first of these devices to be approved by the Food and Drug Administration (FDA) believe that a more appropriate DRG assignment would be DRG 115 (Permanent Cardiac Pacemaker Implantation with AMI, Heart Failure or Shock), because, in their opinion, the higher relative weight assigned to this DRG would provide more equitable payment.

As explained in detail in the September 1, 1992 final rule (57 FR 39749), the current clinical composition and relative weights of the surgical DRGs in MDC 5 do not offer a perfect match with the AICD cases. After reviewing the current DRGs in terms of clinical coherence and similar resource use, we determined that DRG 116 was the best possible fit.

Since reassignment of these procedures to DRG 116, we have annually analyzed the cases based on the most recent data. Based on data in the FY 1994 Medicare Provider Analysis and Review (MedPAR) file, the average standardized charge for the 2,459 AICD cases assigned to DRG 116 is $27,965. The average standardized charge for all cases in DRG 116 is $19,584 and, for DRG 115, $28,965. The $8,381 difference between the average charge for AICD cases in DRG 116 and all cases in DRG 116 is within the variation in charges for that DRG. We note that compared to last year's analysis using FY 1993 MedPAR data, the average charge for the AICD cases has decreased slightly as has the difference in charges

between all cases in DRG 116 and the AICD cases.

The average length of stay for the AICD cases in DRG 116 is 4.0 days compared to 5.89 days for all cases in DRG 116. However, the length of stay for cases in DRG 115 is 11.77. In general, the patients classified to DRG 115 are seriously ill and the long length of stay supports this contention. We continue to believe that the AICD patients are clinically much more similar to the patients classified to DRG 116 than to those in DRG 115 and that it is the cost of the AICD device that is responsible for the high average charge for these cases and not the intensity of hospital services required to treat the patient.

In the September 1, 1994 final rule, we stated our belief that as new AICD devices were approved by the FDA and entered the market, increased competition would result in a decrease in the price of the devices and a corresponding drop in the average charge for a hospital stay for AICD procedures. Second and third generations of several manufacturers' devices are now on the market. In addition, we believe that the slight decrease in average charges seen in the FY 1994 data compared to the FY 1993 data is a direct result of hospitals' ability to obtain AICD devices from multiple sources. (The increase in charges for AICD cases between FY 1992 data and FY 1993 was approximately $6,000.) Based on this evidence, we will continue to assign the AICD implant cases to DRG 116 for FY 1996. We will reassess this assignment as a part of our FY 1997 DRG analysis.

b. Sympathectomy Procedures. When performed in connection with a principal diagnosis assigned to MDC 5, procedure code 05.24 (presacral sympathectomy) is assigned to DRGs 478 and 479 (Other Vascular Procedures).[1] However, the four other sympathectomy procedures related to MDC 5 diagnoses are classified to DRG 120 (Other Circulatory System OR Procedures). In order to improve clinical consistency, we propose to assign procedure code 05.24 to DRG 120 rather than to DRGs 478 and 479.

We realize that this proposal moves a procedure from a specific surgical DRG class to the ''other OR procedures'' surgical class in MDC 5. There are very few presacral sympathectomies performed for the Medicare population, therefore, we believe that this move will not unduly affect any cases in the Medicare population. We note that we are not moving this procedure from the DRGs to which it is assigned in MDC 1 (Diseases and Disorders of the Nervous System) or MDC 13 (Diseases and Disorders of the Female Reproductive System).

3. MDC 15 (Newborns and Other Neonates With Conditions Originating in the Perinatal Period)

In the September 1, 1994 final rule (59 FR 45341), we stated our intention to improve the classification and relative weights of the DRGs that apply to newborns, children, and maternity patients. Because the Medicare population does not include many of these individuals, the original DRG classification system was developed from analysis of claims data representative of the total inpatient population. Non-Medicare discharge records from Maryland and Michigan hospitals were used to calculate the original Medicare weights for the DRGs to which newborns, children, and maternity patients are classified. Since that time, because of the lack of Medicare data, these low-volume DRGs have not been analyzed and refined, and the relative weights assigned to them may no longer be entirely reflective of the resources needed to treat patients.

Accordingly, we have acquired hospital claims data representative of the total patient population for analysis and evaluation. These data, collected and formatted by the Urban Institute under contract with HCFA (Contract 500–92–0024), represent claims for non-Medicare payers from 19 States. The data base contains approximately 17 million discharge records. Using this data, we are evaluating possible modifications to MDC 15 that would better address the requirements for an all-patient population.

As we have not yet completed this evaluation, we are not proposing an MDC 15 DRG reclassification structure for FY 1996. However, we are proposing to adjust the DRG relative weights for the Medicare low-volume DRGs. We identified 36 low-volume DRGs (defined as those DRGs with fewer than 10 cases) in the FY 1994 MedPAR data, which is being used to calculate the FY 1996 DRG relative weights. These DRGs are generally those assigned to patients age 0–17, many of the neonate and newborn MDC 15 DRGs, and one DRG in MDC 14 (Pregnancy, Childbirth and Puerperium). The DRG relative weights for these low-volume DRGs were calculated based on the non-Medicare data we acquired from the 19 States.

During the year, we have received suggestions from the public concerning improvements for the neonate DRG classifications. Among these suggestions have been recommendations concerning specific diagnoses that are currently considered significant problems in determining the assignment of a neonate case to DRG 390 (Neonate with other Significant Problems) rather than DRG 391 (Normal Newborn). Another issue is the assignment to MDC 15 of discharges with a principal diagnosis of certain congenital defects regardless of the age of the patient. Because the MDC 15 modifications that we are considering should resolve these concerns, we are not proposing to revise the assignment of these diagnoses and conditions at this time. Rather, we will incorporate the necessary and appropriate assignment of these cases with our overall modification of the neonate DRGs.

4. MDC 24 (Multiple Significant Trauma)

Several years ago, we created a new MDC 24 to classify cases of multiple significant trauma. In order to be assigned to this MDC, a patient must have a principal diagnosis of trauma and at least two significant trauma diagnosis codes from two different body sites reported as either principal or secondary diagnoses. We recognize eight different body site categories: head, chest, abdomen, kidney, urinary, pelvis and spine, upper limb, and lower limb.

It has been brought to our attention that diagnosis code 851.06 (Cerebral cortex contusion with loss of consciousness of unspecified duration) was mistakenly excluded from the list of diagnoses that count as principal or secondary diagnoses in the significant head trauma section of MDC 24. Because this code is clinically similar to those already on the list of principal or secondary diagnoses that cause assignment to DRG 487 (Other Multiple Significant Trauma), we propose to add this diagnosis to the significant head trauma list effective with discharges occurring on or after October 1, 1995.

5. Surgical Hierarchies

Some inpatient stays entail multiple surgical procedures, each one of which, occurring by itself, could result in assignment of the case to a different DRG within the MDC to which the principal diagnosis is assigned. It is, therefore, necessary to have a decision rule by which these cases are assigned to a single DRG. The surgical hierarchy, an ordering of surgical classes from

[1] A single title combined with two DRG numbers is used to signify pairs. Generally, the first DRG is for cases with CC and the second DRG is for cases without CC. If a third number is included, it represents cases of patients who are age 0–17. Occasionally, a pair of DRGs is split on age >17 and age 0–17.

most to least resource intensive, performs that function. Its application ensures that cases involving multiple surgical procedures are assigned to the DRG associated with the most resource-intensive surgical class.

Because the relative resource intensity of surgical classes can shift as a function of DRG reclassification and recalibration, we reviewed the surgical hierarchy of each MDC, as we have for previous reclassifications, to determine if the ordering of classes coincided with the intensity of resource utilization, as measured by the same billing data used to compute the DRG relative weights.

A surgical class can be composed of one or more DRGs. For example, in MDC 5, the surgical class ''heart transplant'' consists of a single DRG (DRG 103) and the class ''coronary bypass'' consists of two DRGs (DRGs 106 and 107). Consequently, in many cases, the surgical hierarchy has an impact on more than one DRG. The methodology for determining the most resource-intensive surgical class, therefore, involves weighting each DRG for frequency to determine the average resources for each surgical class. For example, assume surgical class A includes DRGs 1 and 2 and surgical class B includes DRGs 3, 4, and 5, and that the average charge of DRG 1 is higher than that of DRG 3, but the average charges of DRGs 4 and 5 are higher than the average charge of DRG 2. To determine whether surgical class A should be higher or lower than surgical class B in the surgical hierarchy, we would weight the average charge of each DRG by frequency (that is, by the number of cases in the DRG) to determine average resource consumption for the surgical class. The surgical classes would then be ordered from the class with the highest average resource utilization to that with the lowest, with the exception of ''other OR procedures'' as discussed below.

This methodology may occasionally result in a case involving multiple procedures being assigned to the lower-weighted DRG (in the highest, most resource-intensive surgical class) of the available alternatives. However, given that the logic underlying the surgical hierarchy provides that the GROUPER searches for the procedure in the most resource-intensive surgical class, which may sometimes occur in cases involving multiple procedures, this result is unavoidable.

We note that, notwithstanding the foregoing discussion, there are a few instances when a surgical class with a lower average relative weight is ordered above a surgical class with a higher average relative weight. For example, the ''other OR procedures'' surgical class is uniformly ordered last in the surgical hierarchy of each MDC in which it occurs, regardless of the fact that the relative weight for the DRG or DRGs in that surgical class may be higher than that for other surgical classes in the MDC. The ''other OR procedures'' class is a group of procedures that are least likely to be related to the diagnoses in the MDC but are occasionally performed on patients with these diagnoses. Therefore, these procedures should only be considered if no other procedure more closely related to the diagnoses in the MDC has been performed.

A second example occurs when the difference between the average weights for two surgical classes is very small. We have found that small differences generally do not warrant reordering of the hierarchy since, by virtue of the hierarchy change, the relative weights are likely to shift such that the higher-ordered surgical class has a lower average weight than the class ordered below it.

Based on the preliminary recalibration of the DRGs, we are proposing to modify the surgical hierarchy as set forth below. As we stated in the September 1, 1989 final rule (54 FR 36457), we are unable to test the effects of the proposed revisions to the surgical hierarchy and to reflect these changes in the proposed relative weights due to the unavailability of revised GROUPER software at the time this proposed rule is prepared. Rather, we simulate most major classification changes to approximate the placement of cases under the proposed reclassification and then determine the average charge for each DRG. These average charges then serve as our best estimate of relative resource use for each surgical class. We test the proposed surgical hierarchy changes after the revised GROUPER is received and reflect the final changes in the DRG relative weights in the final rule. Further, as discussed below in section II.C of this preamble, we anticipate that the final recalibrated weights will be somewhat different from those proposed, since they will be based on more complete data. Consequently, further revision of the hierarchy, using the above principles, may be necessary in the final rule.

At this time, we would revise the surgical hierarchy for MDC 2 (Diseases and Disorders of the Eye) and MDC 8 (Diseases and Disorders of the Musculoskeletal System and Connective Tissue) as follows:

- In MDC 2, we would reorder Extraocular Procedures Except Orbit (DRGs 40 and 41) above Retinal Procedures (DRG 36).
- In MDC 8, we would reorder Major Thumb or Joint Procedures or Other Hand or Wrist Procedures with CC (DRG 228) above Major Shoulder/Elbow Procedures or Other Upper Extremity Procedures with CC (DRG 223).

6. Refinement of Complications and Comorbidities List

There is a standard list of diagnoses that are considered complications or comorbidities (CCs). We developed this list using physician panels to include those diagnoses that, when present as a secondary condition, would be considered a substantial complication or comorbidity. In preparing the original CC list, a substantial CC was defined as a condition that, because of its presence with a specific principal diagnosis, would increase the length of stay by at least 1 day for at least 75 percent of the patients.

In previous years, we have made changes to the standard list of CCs, either by adding new CCs or deleting CCs already on the list. For FY 1996, we are proposing the following changes to the current CC list:

- We would add diagnosis code 008.49 (Bacterial enteritis) to the CC list. This diagnosis would be considered a CC for any principal diagnosis not shown in Table 6f, Addition to the CC Exclusions List (see discussion of CC Exclusions list in section V of the addendum below).
- We would delete diagnosis code 276.8 (Hypopotassemia) from the CC list. This diagnosis would no longer be considered a CC for any principal diagnosis.

In the September 1, 1987 final notice concerning changes to the DRG classification system (52 FR 33143), we modified the GROUPER logic so that certain diagnoses included on the standard list of CCs would not be considered a valid CC in combination with a particular principal diagnosis. Thus, we created the CC Exclusions List. We made these changes to preclude coding of CCs for closely related conditions, to preclude duplicative coding or inconsistent coding from being treated as CCs, and to ensure that cases are appropriately classified between the complicated and uncomplicated DRGs in a pair.

In the May 19, 1987 proposed notice concerning changes to the DRG classification system (52 FR 18877), we explained that the excluded secondary diagnoses were established using the following five principles:

- Chronic and acute manifestations of the same condition should not be

considered CCs for one another (as subsequently corrected in the September 1, 1987 final notice (52 FR 33154)).

- Specific and nonspecific (that is, not otherwise specified (NOS)) diagnosis codes for a condition should not be considered CCs for one another.
- Conditions that may not co-exist, such as partial/total, unilateral/bilateral, obstructed/unobstructed, and benign/malignant, should not be considered CCs for one another.
- The same condition in anatomically proximal sites should not be considered CCs for one another.
- Closely related conditions should not be considered CCs for one another.

The creation of the CC Exclusions List was a major project involving hundreds of codes. The FY 1988 revisions were intended to be only a first step toward refinement of the CC list in that the criteria used for eliminating certain diagnoses from consideration as CCs were intended to identify only the most obvious diagnoses that should not be considered complications or comorbidities of another diagnosis. For that reason, and in light of comments and questions on the CC list, we have continued to review the remaining CCs to identify additional exclusions and to remove diagnoses from the master list that have been shown not to meet the definition of a CC stated above, as appropriate. (See the September 30, 1988 final rule for the revision made for the discharges occurring in FY 1989 (53 FR 38485); the September 1, 1989 final rule for the FY 1990 revision (54 FR 36552); the September 4, 1990 final rule for the FY 1991 revision (55 FR 36126); the August 30, 1991 final rule for the FY 1992 revision (56 FR 43209); the September 1, 1992 final rule for the FY 1993 revision (57 FR 39753); the September 1, 1993 final rule for the FY 1994 revisions (58 FR 46278); and the September 1, 1994 rule for the FY 1995 revisions (59 FR 45334).)

We are proposing a limited revision of the CC Exclusions List to take into account the changes that will be made in the ICD–9–CM diagnosis coding system effective October 1, 1995 as well as the proposed CC changes described above. (See section II.B.8, below, for a discussion of these changes.) These proposed changes are being made in accordance with the principles established when we created the CC Exclusions List in 1987.

The changes discussed above have been added to Table 6g, Additions to the CC Exclusions List, in section V of the addendum to this proposed rule.

Tables 6g and 6h in section V of the addendum to this proposed rule contain the proposed revisions to the CC Exclusions List that would be effective for discharges occurring on or after October 1, 1995. Each table shows the principal diagnoses with proposed changes to the excluded CCs. Each of these principal diagnoses is shown with an asterisk and the additions or deletions to the CC Exclusions List are provided in an indented column immediately following the affected principal diagnosis.

CCs that are added to the list are in Table 6g—Additions to the CC Exclusions List. Beginning with discharges on or after October 1, 1995, the indented diagnoses will not be recognized by the GROUPER as valid CCs for the asterisked principal diagnosis.

CCs that are deleted from the list are in Table 6h—Deletions from the CC Exclusions List. Beginning with discharges on or after October 1, 1995, the indented diagnoses will be recognized by the GROUPER as valid CCs for the asterisked principal diagnosis.

Copies of the original CC Exclusions List applicable to FY 1988 can be obtained from the National Technical Information Service (NTIS) of the Department of Commerce. It is available in hard copy for $84.00 plus $6.00 shipping and handling and on microfiche for $20.50, plus $4.00 for shipping and handling. A request for the FY 1988 CC Exclusions List (which should include the identification accession number, (PB) 88–133970) should be made to the following address: National Technical Information Service; United States Department of Commerce; 5285 Port Royal Road, Springfield, Virginia 22161; or by calling (703) 487–4650.

Users should be aware of the fact that all revisions to the CC Exclusions List (FYs 1989, 1990, 1991, 1992, 1993, 1994, and 1995) and those in Tables 6g and 6h of this document must be incorporated into the list purchased from NTIS in order to obtain the CC Exclusions List applicable for discharges occurring on or after October 1, 1995.

Alternatively, the complete documentation of the GROUPER logic, including the current CC Exclusions List, is available from 3M/Health Information Systems (HIS), which, under contract with HCFA, is responsible for updating and maintaining the GROUPER program. The current DRG Definitions Manual, Version 12.0, is available for $195.00, which includes $15.00 for shipping and handling. Version 13.0 of this manual, which will include the changes proposed in this document as finalized in response to public comment, will be available in September 1995 for $195.00. These manuals may be obtained by writing 3M/HIS at: 100 Barnes Road; Wallingford, Connecticut 06492; or by calling (203) 949–0303. Please specify the revision or revisions requested.

7. Review of Procedure Codes in DRGs 468, 476, and 477

Each year, we review cases assigned to DRG 468 (Extensive OR Procedure Unrelated to Principal Diagnosis), DRG 476 (Prostatic OR procedure Unrelated to Principal Diagnosis), and DRG 477 (Nonextensive OR Procedure Unrelated to Principal Diagnosis) in order to determine whether it would be appropriate to change the procedures assigned among these DRGs.

DRGs 468, 476, and 477 are reserved for those cases in which none of the OR procedures performed is related to the principal diagnosis. These DRGs are intended to capture atypical cases, that is, those cases not occurring with sufficient frequency to represent a distinct, recognizable clinical group. DRG 476 is assigned to those discharges in which one or more of the following prostatic procedures are performed and are unrelated to the principal diagnosis:

60.0 Incision of prostate
60.12 Open biopsy of prostate
60.15 Biopsy of periprostatic tissue
60.18 Other diagnostic procedures on prostate and periprostatic tissue
60.2 Transurethral prostatectomy
60.61 Local excision of lesion of prostate
60.69 Prostatectomy NEC
60.81 Incision of periprostatic tissue
60.82 Excision of periprostatic tissue
60.93 Repair of prostate
60.94 Control of (postoperative) hemorrhage of prostate
60.95 Transurethral balloon dilation of the prostatic urethra
60.99 Other operations on prostate

All remaining OR procedures are assigned to DRGs 468 and 477, with DRG 477 assigned to those discharges in which the only procedures performed are nonextensive procedures that are unrelated to the principal diagnosis. The original list of the ICD–9–CM procedure codes for the procedures we consider nonextensive procedures if performed with an unrelated principal diagnosis was published in Table 6C in section IV of the addendum to the September 30, 1988 final rule (53 FR 38591). As part of the final rules published on September 4, 1990, August 30, 1991, September 1, 1992, September 1, 1993, and September 1, 1994, we moved several other procedures from DRG 468 to 477. (See 55 FR 36135, 56

FR 43212, 57 FR 23625, 58 FR 46279, and 59 FR 45336 respectively.)

a. Adding Procedure Codes to MDCs. We annually conduct a review of procedures producing DRG 468 or 477 assignments on the basis of volume of cases in these DRGs with each procedure. Our medical consultants then identify those procedures occurring in conjunction with certain principal diagnoses with sufficient frequency to justify adding them to one of the surgical DRGs for the MDC in which the diagnosis falls. This year's review did not identify any necessary changes; therefore, we are not proposing to move any procedures from DRG 468 or DRG 477 to one of the surgical DRGs.

b. Reassignment of Procedures Among DRGs 468, 476, and 477. We also reviewed the list of procedures that produce assignments to each of DRG 468, 476, and 477 to ascertain if any of those procedures should be moved to one of the other DRGs based on average charges and length of stay.

Generally, we move only those procedures for which we have an adequate number of discharges to analyze the data. Based on our review this year, we are proposing to move a limited number of procedures.

In reviewing the list of OR procedures that produce DRG 468 assignments, we analyzed the average charge and length of stay data for cases assigned to that DRG to identify those procedures that are more similar to the discharges that currently group to either DRG 476 or 477. We identified several procedures that are significantly less resource intensive than the other procedures assigned to DRG 468. These procedures occur in the same ''family'' (that is, they relate to procedures on the same body part or system) and at least one of this family of codes is already present within DRG 477. Therefore, we are proposing to move the following procedures to the list of procedures that result in assignment to DRG 477:

18.21 Excision of preauricular sinus
18.31 Radical excision of lesion of external ear
18.39 Other excision of external ear
18.5 Surgical correction of prominent ear
18.6 Reconstruction of external auditory canal
18.71 Construction of auricle of ear
18.72 Reattachment of amputated ear
18.9 Other operations of external ear

We conducted a similar analysis of the procedures that assign cases to DRG 477 to determine if any of those procedures might more appropriately be classified to DRG 468. Again, we analyzed charge and length of stay data to identify procedures that were more similar to discharges assigned to DRG 468 than to those classified in DRG 477. We did not identify any procedures in DRG 477 that should be assigned to DRG 468.

All of the proposed reassignments of procedures in DRGs 468 and 477 would be effective with discharges beginning on or after October 1, 1995.

8. Changes to the ICD–9–CM Coding System

As discussed above in section II.B.1 of this preamble, the ICD–9–CM is a coding system that is used for the reporting of diagnoses and procedures performed on a patient. In September 1985, the ICD–9–CM Coordination and Maintenance Committee was formed. This is a Federal interdepartmental committee charged with the mission of maintaining and updating the ICD–9–CM. That mission includes approving coding changes, and developing errata, addenda, and other modifications to the ICD–9–CM to reflect newly developed procedures and technologies and newly identified diseases. The Committee is also responsible for promoting the use of Federal and non-Federal educational programs and other communication techniques with a view toward standardizing coding applications and upgrading the quality of the classification system.

The Committee is co-chaired by the National Center for Health Statistics (NCHS) and HCFA. The NCHS has lead responsibility for the ICD–9–CM diagnosis codes included in *Volume 1—Diseases: Tabular List* and *Volume 2—Diseases: Alphabetic Index,* while HCFA has lead responsibility for the ICD–9–CM procedure codes included in *Volume 3—Procedures: Tabular List and Alphabetic Index.*

The Committee encourages participation in the above process by health-related organizations. In this regard, the Committee holds public meetings for discussion of educational issues and proposed coding changes. These meetings provide an opportunity for representatives of recognized organizations in the coding fields, such as the American Health Information Management Association (AHIMA) (formerly American Medical Record Association (AMRA)), the American Hospital Association (AHA), and various physician specialty groups as well as physicians, medical record administrators, health information management professionals, and other members of the public to contribute ideas on coding matters. After considering the opinions expressed at the public meetings and in writing, the Committee formulates recommendations, which then must be approved by the agencies.

The Committee presented proposals for coding changes at public meetings held on May 5 and December 1 and 2, 1994, and finalized the coding changes after consideration of comments received at the meetings and in writing within 30 days following the December 1994 meeting. The initial meeting for consideration of coding issues for implementation in FY 1997 was held on May 4, 1995. Copies of the minutes of these meetings may be obtained by writing to one of the co-chairpersons representing NCHS and HCFA. We encourage commenters to address suggestions on coding issues involving diagnosis codes to: Sue Meads, Co-Chairperson; ICD–9–CM Coordination and Maintenance Committee; NCHS; Rm. 9–58; 6525 Belcrest Road; Hyattsville, Maryland 20782.

Questions and comments concerning the procedure codes should be addressed to: Patricia E. Brooks, Co-Chairperson; ICD–9–CM Coordination and Maintenance Committee; HCFA, Office of Hospital Policy; Division of Prospective Payment System; Rm. 1–H–1 East Low Rise Building; 6325 Security Boulevard; Baltimore, Maryland 21207.

The ICD–9–CM code changes that have been approved will become effective October 1, 1995. The new ICD–9–CM codes are listed, along with their proposed DRG classifications, in Tables 6a and 6b (New Diagnosis Codes and New Procedure Codes, respectively) in section V of the addendum to this proposed rule. As we stated above, the code numbers and their titles were presented for public comment in the ICD–9–CM Coordination and Maintenance Committee meetings. Both oral and written comments were considered before the codes were approved. Therefore, we are soliciting comments only on the proposed DRG classification.

Further, the Committee has approved the expansion of certain ICD–9–CM codes to require an additional digit for valid code assignment. Diagnosis codes that have been replaced by expanded codes, other codes, or have been deleted are in Table 6c (Invalid Diagnosis Codes). The procedure codes that have been replaced by expanded codes or have been deleted are in Table 6d (Invalid Procedure Codes). These invalid diagnosis and procedure codes will not be recognized by the GROUPER beginning with discharges occurring on or after October 1, 1995. The corresponding new or expanded codes are included in Tables 6a and 6b. Revisions to diagnosis and procedure code titles are in Tables 6e (Revised

Diagnosis Code Titles) and 6f (Revised Procedure Code Titles), which also include the proposed DRG assignments for these revised codes.

There are three new procedure codes that were previously included in codes classified as operating room procedures even though the specific procedures specified by the new codes may not be routinely performed in an operating room. The three codes are as follows:

48.36 [Endoscopic] polypectomy of rectum
59.72 Injection of implant into urethra and/or bladder neck
92.3 Stereotactic radiosurgery

These three new codes are being classified as Non-OR procedures that affect DRG assignment and are indicated as such in Table 6b—New Procedure Codes. We will continue to assign these three codes to the surgical DRGs to which they are currently assigned. As we have stated in previous rules, most recently in the September 1, 1994, final rule (59 FR 45340), our practice is to assign a new code to the same DRG as its predecessor. One compelling reason for this practice is our inability to move the cases associated with the new code to a new DRG assignment as a part of DRG reclassification and recalibration. However, in 2 years, when data on the new procedure codes are available, we will reevaluate the DRG classification of the codes. At that time, we may move one or more of the procedure codes to a different surgical DRG or we may classify them as non-OR procedures that do not affect DRG assignment.

9. DRG Refinements

For several years, we have been analyzing major refinements to the DRG classification system to compensate hospitals more equitably for treating severely ill Medicare patients. These refinements, generally referred to as severity of illness adjustments, would create DRGs specifically for hospital discharges involving very ill patients who consume far more resources than do other patients classified to the same DRGs in the current system. This approach has been taken by various other groups in refining the Medicare DRG system to include severity measurements, most notably the research done for Yale, the changes incorporated by the State of New York into its all patient (AP) DRG system, and the all-patient refined (APR) DRGs, which are a joint effort of 3M/HIS and the National Association of Children's Hospitals and Related Institutions.

In the May 27, 1994 proposed rule, we announced the availability of a paper we had prepared that describes our preliminary severity DRG classification system as well as the analysis upon which our proposal was formulated.

Comments were due to HCFA by September 30, 1994. We received 99 individual letters commenting on the DRG refinements. Many of the commenters supported the change in theory, but there were numerous specific comments on the methodology.

Our plan was to incorporate comments and suggestions we received and to consider proposing the complete revised DRG system as part of the FY 1996 prospective payment system proposed rule. However, as the final rule published on September 1, 1992 (57 FR 39761) indicated, we would not propose to make significant changes to the DRG classification system unless we are able either to improve our ability to predict coding changes by validating in advance the impact that potential DRG changes may have on coding behavior, or to make methodological changes to prevent building the inflationary effects of the coding changes into future program payments.

Besides the mandate of section 1886(d)(4)(C)(iii) of the Act, which provides that aggregate payments may not be affected by DRG reclassification and recalibration changes, we do not believe it is prudent policy to make changes for which we cannot predict the effect on the case-mix index and, thus, payments. Our goal is to refine our methodology so that we can fulfill, in the most appropriate manner, both the statutory requirement to make appropriate DRG classification changes and to recalibrate DRG relative weights (as mandated by section 1886(d)(4)(C) of the Act) as well as to make DRG changes in a budget neutral manner.

One approach to this problem would be to maintain the average case weight at 1.0 after recalibration, thereby eliminating the process of normalization. In other words, after recalibration, we would not scale the new relative weights upward to carry forward the cumulative effects of past case-mix increases. We would, instead, make an adjustment or include in the annual update factor a specific allowance for any real case-mix change that occurred during the previous year. This is a relatively simple and straightforward system for preventing the effects of year-to-year increases in the case-mix index from accumulating in the DRG weights and to account for expected changes in coding practice. In addition, we are exploring a means of estimating anticipated case-mix change due to changes in coding practice that are a result of DRG classification revisions. (See section VII.E of this preamble for a more detailed description of this process in response to a ProPAC recommendation.) However, since we have not yet resolved these issues, we are unable to propose our refined DRG severity system for FY 1996. We will continue to analyze the comments we received and validate our previous research with later MedPAR data. We remain committed to proposing our revised system as soon as possible.

C. Recalibration of DRG Weights

We are proposing to use the same basic methodology for the FY 1996 recalibration as we did for FY 1995. (See the September 1, 1994 final rule (59 FR 45347).) That is, we would recalibrate the weights based on charge data for Medicare discharges. However, we would use the most current charge information available, the FY 1994 MedPAR file, rather than the FY 1993 MedPAR file. The MedPAR file is based on fully-coded diagnostic and surgical procedure data for all Medicare inpatient hospital bills.

The proposed recalibrated DRG relative weights are constructed from FY 1994 MedPAR data, based on bills received by HCFA through December 1994, from all hospitals subject to the prospective payment system and short-term acute care hospitals in waiver States. The FY 1994 MedPAR file includes data for approximately 10.9 million Medicare discharges.

Although we are using the same basic methodology for recalibration, we are making two revisions which are described below. The methodology used to calculate the proposed DRG relative weights from the FY 1994 MEDPAR file is as follows:

- To the extent possible, all the claims were regrouped using the proposed DRG classification revisions discussed above in section II.B of this preamble. As noted in section II.B.4, due to the unavailability of revised GROUPER software, we simulate most major classification changes to approximate the placement of cases under the proposed reclassification. However, there are some changes that cannot be modeled.
- Charges were standardized to remove the effects of differences in area wage levels, indirect medical education costs, disproportionate share payments, and, for hospitals in Alaska and Hawaii, the applicable cost-of-living adjustment.
- The average standardized charge per DRG was calculated by summing the standardized charges for all cases in the DRG and dividing that amount by the number of cases classified in the DRG.
- We then eliminated statistical outliers. In computing the FY 1995 weights, we eliminated all cases outside of 3.0 standard deviations from the mean of the log distribution of charges per case for each DRG. For the proposed FY 1996 relative weights, we would

eliminate a case only if it met the current criterion and was also outside of 3.0 standard deviations from the mean log of distribution of charges per day. We believe that this refinement to the methodology will reduce the risk of eliminating cases with unusually low or high total charges that are nevertheless accurately reported. For example, a case with extremely high charges and a corresponding extremely long length of stay would be less likely to be eliminated under the revised methodology.

- The average charge for each DRG was then recomputed (excluding the statistical outliers) and divided by the national average standardized charge per case to determine the relative weight. The second revision we are making is in the treatment of transfer cases. In the current recalibration methodology, we count transfer cases as full cases. This distorts the average standardized charges, particularly in DRGs with a high percentage of transfer cases, because the charges associated with a transfer case often do not reflect the resources necessary for a complete course of treatment. Therefore, in calculating the proposed FY 1996 relative weights, a transfer case is counted as a fraction of a case based on the ratio of its length of stay to the geometric mean length of stay of the cases assigned to the DRG. That is, a 5-day length of stay transfer case assigned to a DRG with a geometric mean length of stay of 10 days is counted as 0.5 of a total case.
- We established the relative weight for heart and liver transplants (DRGs 103 and 480) in a manner consistent with the methodology for all other DRGs except that the transplant cases that were used to establish the weights were limited to those Medicare-approved heart and liver transplant centers that have cases in the FY 1994 MedPAR file. (Medicare coverage for heart and liver transplants is limited to those facilities that have received approval from HCFA as transplant centers.) Similarly, we limited the lung transplant cases we used to establish the weight for DRG 495 (Lung Transplant) to those hospitals that are established lung transplant centers. (As discussed in detail in the final notice with comment period of Medicare coverage of lung transplants published in the **Federal Register** on February 2, 1995 (60 FR 6543), payment for lung transplants will not be limited to Medicare-approved facilities until July 31, 1995.)
- Acquisition costs for kidney, heart, liver, and lung transplants continue to be paid on a reasonable cost basis. Unlike other excluded costs, the acquisition costs are concentrated in specific DRGs (DRG 302 (Kidney Transplant); DRG 103 (Heart Transplant); DRG 480 (Liver Transplant); and DRG 495 (Lung Transplant)). Because these costs are paid separately from the prospective payment rate, it is necessary to make an adjustment to prevent the relative weights for these DRGs from including the effect of the acquisition costs. Therefore, we subtracted the acquisition charges from the total charges on each transplant bill that showed acquisition charges before computing the average charge for the DRG and before eliminating statistical outliers.

When we recalibrated the DRG weights for previous years, we set a threshold of 10 cases as the minimum number of cases required to compute a reasonable weight. We propose to use that same case threshold in recalibrating the DRG weights for FY 1995. Using the FY 1994 MedPAR data set, there are 37 DRGs that contain fewer than 10 cases. As we discuss in detail in section II.B.3 of this preamble, we computed the weight for the 37 low-volume DRGs by using the non-Medicare cases from 19 States.

The weights developed according to the methodology described above, using the proposed DRG classification changes, result in an average case weight that is different from the average case weight before recalibration. Therefore, the new weights are normalized by an adjustment factor, so that the average case weight after recalibration is equal to the average case weight before recalibration. This adjustment is intended to ensure that recalibration by itself neither increases nor decreases total payments under the prospective payment system.

Section 1886(d)(4)(C)(iii) of the Act requires that beginning with FY 1991, reclassification and recalibration changes be made in a manner that assures that the aggregate payments are neither greater than nor less than the aggregate payments that would have been made without the changes. Although normalization is intended to achieve this effect, equating the average case weight after recalibration to the average case weight before recalibration does not necessarily achieve budget neutrality with respect to aggregate payments to hospitals because payment to hospitals is affected by factors other than average case weight. Therefore, as we have done in past years and as discussed in section II.A.4.b of the Addendum to this proposed rule, we are proposing to make a budget neutrality adjustment to assure that the requirement of section 1886(d)(4)(C)(iii) of the Act is met.

III. Proposed Changes to the Hospital Wage Index

A. Background

Section 1886(d)(3)(E) of the Act requires that, as part of the methodology for determining prospective payments to hospitals, the Secretary must adjust the standardized amounts ''for area differences in hospital wage levels by a factor (established by the Secretary) reflecting the relative hospital wage level in the geographic area of the hospital compared to the national average hospital wage level.'' In accordance with the broad discretion conferred by this provision, we currently define hospital labor market areas based on the definitions of Metropolitan Statistical Areas (MSAs) issued by the Office of Management and Budget (OMB). In addition, as discussed below, we adjust the wage index to take into account the geographic reclassification of hospitals in accordance with sections 1886(d)(8)(B) and 1886(d)(10) of the Act.

Section 1886(d)(3)(E) of the Act also requires that the wage index be updated annually beginning October 1, 1993. This section further provides that the Secretary base the update on a survey of wages and wage-related costs of short-term, acute care hospitals. The survey should measure, to the extent feasible, the earnings and paid hours of employment by occupational category and must exclude data with respect to the wages and wage-related costs incurred in furnishing skilled nursing services.

For determining prospective payments to hospitals in FY 1995, the wage index is based on the data collected from the Medicare cost reports submitted by short-term, acute care hospitals for cost reporting periods beginning in FY 1991 (that is, cost reporting periods beginning on or after October 1, 1990 and before October 1, 1991). The FY 1995 wage index includes wages and salaries paid by a hospital, home office salaries, fringe benefits, and certain contract labor costs. The FY 1995 computation for the wage index excludes salaries and wages associated with nonhospital-type services, such as skilled nursing facility services, home health agency services, or other subprovider components that are not subject to the prospective payment system.

As discussed in detail below, we are proposing to use updated wage data to construct the wage index as required by section 1886(d)(3)(E) of the Act. The FY

1996 wage index would be based on data for hospital cost reporting periods beginning on or after October 1, 1991 and before October 1, 1992 (FY 1992).

B. FY 1996 Wage Index Update

We propose to base the FY 1996 wage index, effective for hospital discharges occurring on or after October 1, 1995 and before October 1, 1996, on the data collected from the Medicare cost report (Worksheet S–3, Part II) submitted by hospitals for cost reporting periods beginning in FY 1992.

We propose to use all of the categories of data collected from Worksheet S–3, Part II. Therefore, the proposed FY 1996 wage index reflects the following:

- Total short-term, acute care hospital salaries and hours.
- Home office costs and hours.
- Fringe benefits associated with hospital and home office salaries.
- Direct patient care related contract labor cost and hours.
- The exclusion of salaries and hours for nonhospital type services such as skilled nursing facility services, home health services, or other subprovider components that are not subject to the prospective payment system.

1. Verification of Wage Data From the Medicare Cost Report

The data for the proposed FY 1996 wage index were obtained from Worksheet S–3, Part II, of the HCFA–2552 form submitted by short-term, acute care hospitals for cost reporting periods beginning during FY 1992. The wage data are reported electronically to HCFA through the Hospital Cost Report Information System (HCRIS). As in past years, we initiated an intensive review of the wage data submitted by hospitals and made numerous edits to ensure quality and accuracy. Medicare intermediaries were instructed to transmit any revisions in wage data made as a result of this review through HCRIS by early January 1995.

We then subjected the revised cost report data to several edit checks. Of the 5,304 hospitals in the data base, 3,274 hospitals had data elements that failed an edit. Five of these involved mathematical errors and have been resolved. The other edit failures involved data that appeared unusual and had to be verified by the intermediary. Only 57 hospitals have data elements that were unresolved as of March 21, 1995. Most of the unresolved data elements fall outside established edit parameters and require verification by the intermediary. We deleted seven hospitals from the database because they had extremely high fringe benefit to salary ratios, and the intermediary was unable to provide documentation to substantiate the fringe benefit amount. We will continue to try to resolve these problems so that these seven hospitals can be included in the data used to establish the final wage index.

The wage file used to construct the proposed wage index includes data obtained in late January 1995 from the HCRIS data base and subsequent changes we received from intermediaries through March 21, 1995. We have instructed the intermediaries to complete their verification of questionable data elements and to transmit any changes to the wage data, through HCRIS, no later than June 15, 1995. We expect that all outstanding data elements will be resolved by that date and that the revised data will be reflected in the final rule.

Following a procedure initiated last year with the proposed FY 1995 wage index, to allow hospitals more time to evaluate the wage data used to construct the proposed hospital wage index, we made available to the public a diskette containing the raw hospital wage data that were used to construct the proposed FY 1996 wage index. In a memorandum dated February 28, 1995, we instructed all fiscal intermediaries to inform the prospective payment hospitals they serve that the FY 1992 data diskette would be available approximately mid-March 1995. The fiscal intermediaries were also instructed to advise hospitals of the availability of the data either through their representative hospital organizations or directly from HCFA using order forms provided to them. Additional details on the cost and ordering of this data file are discussed below in section VIII.B of this preamble, Requests for Data from the Public.

In addition, we note that Table 3C in the Addendum to this proposed rule contains each hospital's inflated average hourly wage used to construct the proposed wage index values. By dividing the hourly wage by the applicable inflation factors (set forth below in section III.B.3. of this preamble), a hospital can determine its uninflated average hourly wage as reflected in the proposed wage index. A corresponding table will also be included in the final rule. If, based on its review of the data on the diskette or in Table 3C, a hospital believes that there is a problem with its wage data, the hospital should immediately contact its intermediary as discussed below.

2. Requests for Wage Data Corrections

As noted above, we will use cost report data from FY 1992 (that is, cost reporting periods beginning on or after October 1, 1991 and before October 1, 1992) for the FY 1996 update to the wage index. We believe hospitals have had ample time to ensure the accuracy of their FY 1992 wage data. Moreover, the ultimate responsibility for accurately completing the cost report rests with the hospital, which must attest to the accuracy of the data at the time the cost report is filed. However, if after review of the diskette or Table 3C, a hospital believes that its FY 1992 wage data have been incorrectly reported, the hospital must submit corrections along with complete supporting documentation to its intermediary in time to allow for review, verification, and transmission of the data before the development of the final wage index.

In the February 28 memorandum to the intermediaries, we indicated that, to allow sufficient time to process any changes, a hospital must submit requests for corrections to its fiscal intermediary by May 15, 1995. Requests were to include all documentation necessary to support the requested change. To be reflected in the final wage index, any wage data corrections must be reviewed by the intermediary and transmitted to HCFA through HCRIS on or before June 15, 1995. These deadlines, which correspond to the deadlines we used last year for the FY 1995 wage index, are necessary to allow sufficient time to review and process the data so that the final wage index calculation can be completed for development of the final prospective payment rates to be published by September 1, 1995. We cannot guarantee that corrections transmitted to HCFA after June 15, 1995, will be reflected in the final wage index.

After reviewing requested changes submitted by hospitals, intermediaries will transmit any revised cost reports to HCRIS and forward a copy of the revised Worksheet S–3, Part II to the hospitals. If requested changes are not accepted, fiscal intermediaries will notify hospitals in writing of reasons why the changes were not accepted. This procedure will ensure that hospitals have an opportunity to verify the data that will be used to construct their wage index values. We believe that fiscal intermediaries are generally in the best position to make evaluations regarding the appropriateness of a particular cost and whether it should be included in the wage index data. However, if a hospital disagrees with the intermediary's resolution of a requested change, the hospital may contact HCFA in an effort to resolve the dispute. We note that the June 15 deadline also applies to these requested changes.

We have created the process described above to resolve all substantive wage data correction disputes before we finalize the raw wage data for the FY 1996 payment rates. Accordingly, hospitals that do not meet the procedural deadlines set forth above will not be afforded a later opportunity to submit wage corrections or to dispute the intermediary's decision with respect to requested changes. We intend to make a diskette available in mid-August that will contain the finalized raw wage data that will be used to construct the wage index values in the final rule. As with the diskette made available in March 1995, HCFA will make the August diskette available to hospital associations and the public. This August diskette, however, is being made available only for the limited purpose of identifying any potential errors made by HCFA or the intermediary in the entry of the final wage data that result from the process described above, not for the initiation of new wage data correction requests. Hospitals are encouraged to review their hospital wage data promptly after the release of the second diskette.

If, after reviewing the August diskette, a hospital believes that its wage data are incorrect due to a fiscal intermediary or HCFA error in the entry or tabulation of the final wage data, it should send a letter to both its fiscal intermediary and HCFA. The letters to the intermediary and HCFA should outline why the hospital believes an error exists. These requests must be *received* by HCFA no later than September 21, 1995 to allow inclusion in the wage index values effective October 1, 1995. Requests should be sent to: Office of Hospital Policy; Attention: Nancy Edwards, Director; Division of Prospective Payment System; Central 5–02–17; 7500 Security Boulevard; Baltimore, Maryland 21244–1850. The intermediary will review requests upon receipt, and, if it is determined that an intermediary or HCFA error exists, the fiscal intermediary will notify HCFA immediately.

As indicated above, after mid-August, we will make changes to the hospital wage data only in those very limited situations involving an error by the intermediary or HCFA that the hospital could not have known about before its review of the August diskette. Specifically, neither the intermediary nor HCFA will accept the following types of requests in conjunction with this mid-August process: requests for wage data corrections that were submitted too late to be included in the data transmitted to the HCRIS system on or before June 15, 1995; requests for correction of errors made by the hospital that were not, but could have been, identified during the hospital's review of the March 1995 data; or requests to revisit factual determinations or policy interpretations made by the intermediary or HCFA during the wage data correction process. Verified corrections to the wage index made as a result of an intermediary or HCFA error received timely (that is, by September 21, 1995) will be effective October 1, 1995.

We believe the wage data correction process described above provides hospitals with sufficient opportunity to bring errors made during the preparation of Worksheet S–3 to the intermediary's attention. Moreover, because hospitals will have access to the raw wage data in mid-August, they will have the opportunity to detect any data entry or tabulation errors made by the intermediary or HCFA before the implementation of the prospective payment rates on October 1. We believe that if hospitals avail themselves of this opportunity, the wage index implemented on October 1 should be free of such errors. Nevertheless, in the unlikely event that such errors should occur, we retain the right to make midyear changes to the wage index under very limited circumstances.

Specifically, in accordance with § 412.63(s)(2), we may make midyear corrections to the wage index only in those limited circumstances where a hospital can show: (1) That the intermediary or HCFA made an error in tabulating its data, and (2) that the hospital could not have known about the error, or did not have an opportunity to correct the error, before the beginning of FY 1996 (that is, by the September 21, 1995 deadline). As indicated earlier, since a hospital will have the opportunity to verify its data, and the intermediary will notify the hospital of any changes, we do not foresee any specific circumstances under which midyear corrections would be made. However, should a midyear correction be necessary, the wage index change for the affected area will be made prospectively from the date the correction is made.

It has been our longstanding policy to make midyear revisions to wage index data prospectively only (see, for example, 49 FR 258 (Jan. 3, 1984); 54 FR 36,478 (Sept. 1, 1989)), and we continue to believe that, to the extent that midyear wage data revisions are appropriate, those revisions should be made prospectively only. Some hospitals whose requests for wage data revisions have been denied by HCFA have sought relief in the Federal courts. While no court has yet reversed a HCFA decision denying a hospital's wage data revision request, these cases have the potential to present the question of what effect we would give to such a final judicial decision.

Because we have not previously addressed this question in any rulemaking, we now propose to clarify our position regarding the temporal effect of a final judicial decision reversing a HCFA denial of a hospital's request for a wage data revision. We propose to add a new § 412.63(s)(5) to give such a decision limited retroactive effect. If a final judicial decision reverses a HCFA denial of a hospital's wage data revision request, we propose to treat the hospital as if HCFA's decision on the hospital's wage data revision request had been favorable rather than unfavorable. HCFA would pay the hospital by applying a revised wage index that reflects the revised wage data at issue. The revised wage data would not be considered for purposes of revisiting past adjudications of requests for geographic reclassification under section 1886(d)(10) of the Act. Under the statutory scheme established by Congress, decisions on applications for MGCRB reclassification must be finalized prior to the Federal fiscal year for which the reclassifications would take effect.

In some Federal fiscal years, wage data revision requests were initially reviewed by the intermediaries and forwarded to HCFA's Office of Hospital Policy (or the former Office of Payment Policy) for a determination of whether a revision should be made. In other years, the intermediaries themselves have made determinations on wage data revision requests. The latter is our current policy. Therefore, in the foregoing discussion, the phrases ''HCFA denial of a hospital's wage data revision request'' and ''HCFA decision on the hospital's wage data revision request'' mean the decision by either HCFA's Office of Hospital Policy or the intermediary denying a hospital's request for a wage data revision.

We considered proposing to apply a strict policy of prospectivity to final judicial decisions reversing HCFA denials of wage data revision requests—that is, adopting a policy to apply such judicial decisions prospectively from the date they are made. While we continue to believe that prospective-only changes are most appropriate under a prospective rate-setting system such as the hospital inpatient prospective payment system, we also recognize that hospitals have sought, and will continue to seek, judicial

review of unfavorable HCFA decisions on hospitals' requests for wage data revisions. Applying a policy of strict prospectivity to final judicial decisions reversing HCFA denials of wage data revision requests might be viewed, in some cases, as frustrating the purpose of judicial review, since such a decision might not be made until after the close of the fiscal year or years at issue. Therefore, on balance, we believe the better policy is the one we are currently proposing, under which we would give effect to a final judicial decision reversing a HCFA denial of a hospital's wage data revision request by applying a revised wage index that reflects the revised wage data as if HCFA's decision had been favorable rather than unfavorable.

3. Computation of the Wage Index

As noted above, we are proposing to base the FY 1996 wage index on wage data reported on the FY 1992 cost report. The proposed wage index is based on data from 5,238 hospitals paid under the prospective payment system and short-term, acute care hospitals in waiver States. The method used to compute the proposed wage index is as follows:

Step 1—We gathered data from each of the non-Federal short-term, acute care hospitals for which data were reported on the Worksheet S–3, Part II of the Medicare cost report for the hospital's cost reporting periods beginning on or after October 1, 1991, and before October 1, 1992. Each hospital was assigned to its appropriate urban or rural area prior to any reclassifications under section 1886(d)(8) or 1886(d)(10) of the Act. In addition, we included data from a few hospitals that had cost reporting periods beginning in September 1991 and had reported a cost reporting period exceeding 52 weeks. The data were included because no other data from these hospitals would be available for the cost reporting period described above, and particular labor market areas might be affected due to the omission of these hospitals. However, we generally describe these wage data as FY 1992 data.

Step 2—For each hospital, we subtracted the excluded salaries (that is, direct salaries attributable to skilled nursing facility services, home health services, and other subprovider components not subject to the prospective payment system) from gross hospital salaries to determine net hospital salaries. To the net hospital salaries, we added hospital contract labor costs, hospital fringe benefits, and any home office salaries and fringe benefits reported by the hospital to determine total salaries plus fringe benefits.

Step 3—For each hospital, we inflated or deflated, as appropriate, the total salaries plus fringe benefits resulting from Step 2 to a common period to determine total adjusted salaries. To make the wage inflation adjustment, we used the percentage change in average hourly earnings for each 30-day increment from October 14, 1991 through September 15, 1993, for hospital industry workers from Standard Industry Classification 806, Bureau of Labor Statistics Employment and Earnings Bulletin. The annual inflation rates used were 5.6 percent for FY 1991, 4.8 percent for FY 1992, and 3.6 percent for FY 1993. The inflation factors used to inflate the hospital's data were based on the midpoint of the cost reporting period as indicated below.

MIDPOINT OF COST REPORTING PERIOD

After	Before	Adjustment factor
10/14/91	11/15/91	1.059411
11/14/91	12/15/91	1.055280
12/14/91	01/15/92	1.051165
01/14/92	02/15/92	1.047066
02/14/92	03/15/92	1.042983
03/14/92	04/15/92	1.038916
04/14/92	05/15/92	1.034865
05/14/92	06/15/92	1.030830
06/14/92	07/15/92	1.026810
07/14/92	08/15/92	1.022806
08/14/92	09/15/92	1.018818
09/14/92	10/15/92	1.014845
10/14/92	11/15/92	1.011859
11/14/92	12/15/92	1.008881
12/14/92	01/15/93	1.005912
01/14/93	02/15/93	1.002952
02/14/93	03/15/93	1.000000
03/14/93	04/15/93	0.997057
04/14/93	05/15/93	0.994123
05/14/93	06/15/93	0.991197
06/14/93	07/15/93	0.988280
07/14/93	08/15/93	0.985372
08/14/93	09/15/93	0.982472

For example, the midpoint of a cost reporting period beginning January 1, 1992 and ending December 31, 1992 is June 30, 1992. An inflation adjustment factor of 1.026810 would be applied to the wages of a hospital with such a cost reporting period. In addition, for the data for any cost reporting period that began in FY 1992 and covers a period of less than 360 days or greater than 370 days, we annualized the data to reflect a 1-year cost report. Annualization is accomplished by dividing the data by the number of days in the cost report and then multiplying the results by 365.

Step 4—For each hospital, we subtracted the reported excluded hours from the gross hospital hours to determine net hospital hours. We increased the net hours by the addition of any reported contract labor hours and home office hours to determine total hours.

Step 5—As part of our editing process, we deleted data for 59 hospitals for which we lacked sufficient documentation to verify data that failed

edits because the hospitals are no longer participating in the Medicare program or are in bankruptcy status. We retained the data for other hospitals that are no longer participating in the Medicare program because these hospitals contributed to the relative wage levels in their labor market areas during their FY 1992 cost reporting period.

Step 6—Within each urban or rural labor market area, we added the total adjusted salaries plus fringe benefits obtained in Step 3 for all hospitals in that area to determine the total adjusted salaries plus fringe benefits for the labor market area.

Step 7—We divided the total adjusted salaries plus fringe benefits obtained in Step 6 by the sum of the total hours (from Step 4) for all hospitals in each labor market area to determine an average hourly wage for the area.

Step 8—We added the total adjusted salaries plus fringe benefits obtained in Step 3 for all hospitals in the nation and then divided the sum by the national sum of total hours from Step 4 to arrive at a national average hourly wage. Using the data as described above, the national average hourly wage is $18.8939.

Step 9—For each urban or rural labor market area, we calculated the hospital wage index value by dividing the area average hourly wage obtained in Step 7 by the national average hourly wage computed in Step 8.

C. Allocation of General Service Salaries and Hours to Areas Excluded From the Wage Index

In constructing the wage index, we exclude the direct wages and hours associated with certain subprovider components of the hospital, such as skilled nursing facilities and home health agencies. The cost reporting form used to collect the FY 1992 wage data also includes within the definition of excluded areas any rehabilitation and psychiatric distinct part units of the hospital that are excluded from the prospective payment system. Thus, the wage index is constructed by including only the direct wages and hours associated with those areas of the hospital subject to the prospective payment systems. However, the general service hours associated with excluded areas are not excluded from the wage index calculation.

In the May 26, 1993 proposed rule, we discussed our analysis of our first attempt to allocate overhead salaries and hours to areas of the hospital that are excluded from the prospective payment system (58 FR 30237). This analysis was prompted by several suggestions from hospital representatives that, in addition to excluding the direct salaries and hours for subprovider components of the hospital, HCFA should also exclude the general service, or overhead, wages and hours that are associated with these areas. For example, we currently include all of the wage costs associated with housekeeping in the wage index data, even if a facility has excluded subprovider components that receive housekeeping services. Because the hours associated with workers in the general service areas of the hospital were not collected in the FY 1990 cost reports (the most recent wage data available in 1993), we initiated a special data collection to obtain these data in order to calculate an overhead allocation to excluded areas for the FY 1994 wage index. As we discussed in detail in the May 26, 1993 proposed rule, we identified several problems with the data collected that led us to the conclusion that it would be inappropriate to use the data in allocating the overhead wages and hours. Specifically, there were a large number of hospitals removed due to the edits, a large number of hospitals that experienced significant swings in their average hourly wages when the overhead salaries and hours were allocated, and a large proportion of hospitals whose average hourly wage decreased as a result of the allocation (58 FR 30237–30238). Thus, we did not allocate general service salaries and hours to the excluded areas of hospitals in calculating the FY 1994 wage index.

In the September 1, 1993 final rule, we indicated that we would revisit this issue when the data for cost reporting periods beginning in FY 1992 became available (58 FR 46298). We stated that the overhead allocation performed with data from the 1992 cost reports would be more accurate because the overhead salaries and hours would be determined at the same time. We believed that the retroactive determination of overhead hours for the FY 1990 cost reports may have caused some of the problems with the data. We stated that the FY 1992 cost report might allow a more accurate allocation since both overhead salaries and overhead hours would be directly reported on the Worksheet S–3.

In calculating the FY 1996 wage index, we are using data for cost reporting periods beginning in FY 1992. We received general service hour data for 4,356 of the 4,441 hospitals that reported excluded salaries. We analyzed these data to determine whether we could reasonably allocate the overhead wages and hours to the excluded areas of the hospital. First, we determined the total general service wages (including fringe benefits) from Worksheet A of the cost report. We then developed a ratio of total indirect costs (net of capital costs) allocated to the excluded areas of the hospital to total noncapital general service costs (using Worksheet B, Parts I, II, and III from the cost report). We call this the ''indirect cost ratio.'' We computed the general service salaries and hours allocated to the excluded areas by multiplying the indirect cost ratio by the total general service salaries and by the total general service hours reported by the hospital on the cost report. For example, if 10 percent of a hospital's total indirect costs were allocated to excluded areas, we allocated 10 percent of its overhead salaries and 10 percent of its overhead hours to the excluded areas.

We analyzed the results of the general service allocation to remove any clearly incorrect or distorted allocations. We began by performing preliminary data edits. We eliminated 20 hospitals with allocated salaries or hours greater than the total salaries or hours reported on the cost report (after adjustment for the excluded areas of the hospital). We then analyzed the data for the remaining 4,336 hospitals in order to remove any obviously incorrect allocations. Two hospitals had general service average hourly wages below $5.00. Considering the Federal minimum wage of $4.25, we believe this indicates an obvious error in reporting the hours or salaries. We also eliminated the allocation for eight hospitals with a general service average hourly wage of $100 per hour or greater.

The next edit we performed was based on a comparison of the indirect cost ratio and the ratio of excluded hours (as reported on the cost report) to total hours (including excluded hours). We reasoned that the allocation was probably erroneous if the indirect cost ratio was extraordinarily high, unless there was also a large proportion of the hospital's total hours reported in excluded areas of the hospital. As a result, we eliminated allocations for 58 hospitals that had indirect cost ratios more than 3 standard deviations above the mean (that is, above 0.589986) but hour ratios less than 3 standard deviations above the mean (0.445800).

After completing the above edits, we eliminated the allocation for 48 hospitals whose general service average hourly wage was more than 3 standard deviations above the mean for the remaining hospitals, or above $36.75. Finally, we eliminated the allocation for 21 hospitals for which the percentage difference between their pre-allocation average hourly wage and their general service average hourly wage was more than 3 standard deviations from the mean (if the difference was greater than

66.62 percent or less than −88.24 percent, we eliminated the allocation). These edits eliminated the most extreme and inexplicable general service allocations.

After we completed the above edits, 4,199 hospitals still had overhead allocations. Of these, 71 percent (2,978) had average hourly wages that were lower after the overhead allocation was made to the excluded areas. The average difference between the pre- and post-allocation average hourly wage was −0.14 percent. Eighty-six hospitals had a percentage change of more than 10 percent in their average hourly wage, of which 45 were decreases. An additional 158 hospitals had a percentage change of between 5 and 10 percent, of which 104 were decreases. Thirty-seven of 49 rural labor market areas would experience decreases in their wage index value if we performed the allocation, while 195 of 317 urban areas would experience decreases. The average wage index value for all hospitals would decrease 0.08 percentage points if we performed the overhead allocation.

Thus, we again conclude that it would not be appropriate to perform the allocation of overhead salaries and hours to excluded areas of the hospital in computing the wage index. The data still have the same variations that were prevalent when we declined to use this methodology in the proposed rule for FY 1994: Many hospitals were removed due to the edits, many have large swings in their average hourly wages, and many more hospitals' average hourly wages would decrease as a result of the allocation than would increase, particularly for rural hospitals.

As we noted in the September 1, 1993 final rule (58 FR 46297), if these allocations are accurate, it would mean that for the majority of hospitals with excluded areas, the average hourly wage for the overhead areas (such as laundry and housekeeping) is higher than that for patient care areas (such as nursing). We do not believe that this could be the case for such a large number of hospitals, and we have therefore concluded that the reported data regarding overhead hours are inaccurate. As a result, we have decided not to employ the allocation of general service salaries and hours to excluded areas of the hospital in constructing the FY 1996 wage index.

We note that hospital representatives that support the allocation of overhead salaries to excluded areas do so because they believe that, for those hospitals with excluded areas, the current average hourly wage is artificially weighted downward (see the September 1, 1994 final rule (59 FR 45359)). They believe that the current methodology, which removes the higher nursing costs in excluded areas from the hospital's direct salaries, but leaves in the lower general services salaries, distorts wages downward. The reported data, however, are not consistent with this concern.

While we continue to believe that an allocation of overhead salaries and hours to the excluded subprovider components may be appropriate, it would not benefit the hospital industry or the Medicare program to implement an allocation that is not reliable. Clearly, the overhead hours reported by many hospitals did not accurately reflect the salaries reported. In addition, we realize that the allocation method described above may not necessarily be the most accurate method to make this allocation. We invite public comment concerning alternative methods that might produce a more accurate and uniform allocation method and at the same time impose little or no additional reporting burden on the hospital industry. Commenters should note that, under any acceptable allocation method, we would require that the method be used by all hospitals with excluded areas and that the intermediary be able to verify the accuracy of the reported data.

The cost report effective for FY 1995 (that is for cost reporting periods that begin on or after October 1, 1994 and before October 1, 1995) will collect overhead data, both paid hours and the related salaries, by general service area. These data will be used to construct the wage index for FY 1999. We propose to reevaluate an allocation of overhead salaries and hours to excluded areas of the hospital once the data from this new cost report are available or possibly earlier if we receive comments or suggestions from the public or otherwise determine alternative methods to better allocate overhead salaries.

D. Revisions to the Wage Index Based on Hospital Redesignation

Under section 1886(d)(8)(B) of the Act, hospitals in certain rural counties adjacent to one or more Metropolitan Statistical Areas (MSAs) are considered to be located in one of the adjacent MSAs if certain standards are met. Under section 1886(d)(10) of the Act, the Medicare Geographic Classification Review Board (MGCRB) considers applications by hospitals for geographic reclassification for purposes of payment under the prospective payment system.

The methodology for determining the wage index values for redesignated hospitals is applied jointly to the hospitals located in those rural counties that were deemed urban under section 1886(d)(8)(B) of the Act and those hospitals that were reclassified as a result of the MGCRB decisions under section 1886(d)(10) of the Act. Section 1886(d)(8)(C) of the Act provides that the application of the wage index to redesignated hospitals is dependent on the hypothetical impact that the wage data from these hospitals would have on the wage index value for the area to which they have been redesignated. Therefore, pursuant to section 1886(d)(8)(C) of the Act, the wage index values were determined by considering the following:

- If including the wage data for the redesignated hospitals reduces the MSA wage index value by 1 percentage point or less, the MSA wage index value determined exclusive of the wage data for the redesignated hospitals applies to the redesignated hospitals.
- If including the wage data for the redesignated hospitals reduces the wage index value for the area to which the hospitals are redesignated by more than 1 percentage point, the hospitals that are redesignated are subject to the wage index value of the area that results from including the wage data of the redesignated hospitals (the ''combined'' wage index value). However, the wage index value for the redesignated hospitals cannot be reduced below the wage index value for the rural areas of the State in which the hospitals are located.
- Rural areas whose wage index values would be reduced by excluding the data for hospitals that have been redesignated to another area continue to have their wage index calculated as if no redesignation had occurred. Those rural areas whose wage index value increases as a result of excluding the wage data for the hospitals that have been redesignated to another area have their wage index calculated exclusive of the redesignated hospitals.
- The wage index value for an urban area is calculated exclusive of the wage data for hospitals that have been reclassified to another area. However, geographic reclassification may not reduce the wage index for an urban area below the Statewide rural average, provided the wage index prior to reclassification was greater than the Statewide rural wage index value.
- A change in classification of hospitals from one area to another may not result in the reduction in the wage index for any urban area whose wage index is below the rural wage index for the State. This provision also applies to any urban area that encompasses an entire State.

We note that, except for those rural areas where redesignation would reduce

the rural wage index value, and for urban areas whose wage index values are already below the rural wage index and would be reduced by redesignations, the wage index value for each area is computed exclusive of the data for hospitals that have been redesignated from the area for purposes of their wage index. As a result, several MSAs listed in Table 4a have no hospitals remaining in the MSA. This is because all the hospitals originally in these MSAs have been reclassified to another area by the MGCRB. For those areas, we have listed the Statewide rural wage index value.

The proposed revised wage index values for FY 1996 are shown in Tables 4a, 4b, and 4c of the addendum to this proposed rule. Hospitals that are redesignated should use the wage index values shown in Table 4c. For some areas, more than one wage index value will be shown in Table 4c. This occurs when hospitals from more than one State are included in the group of redesignated hospitals, and one State has a higher Statewide rural wage index value than the wage index value otherwise applicable to the redesignated hospitals. Tables 4d and 4e list the average hourly wage for each labor market area based on the FY 1992 wage data. In addition, as discussed above, we have expanded Table 3C (Hospital Case-Mix Indexes for Discharges) to include the average hourly wage for each hospital based on the FY 1992 data. The MGCRB will use the average hourly wage published in the final rule to evaluate a hospital's application for reclassification, unless that average hourly wage is later revised in accordance with the wage data correction policy described in § 412.63(s)(2). In such cases, the MGCRB will use the most recent revised data used for purposes of the hospital wage index. Hospitals that choose to apply before publication of the final rule can use the proposed wage data in applying to the MGCRB for wage index reclassifications that would be effective for FY 1997. We note that in adjudicating these wage reclassification requests during FY 1996, the MGCRB will use the average hourly wages for each hospital and labor market area that are reflected in the final FY 1996 wage index.

The proposed FY 1996 wage index values incorporate all hospital redesignations for FY 1996. At the time this proposed wage index was constructed, the MGCRB had completed its review. For FY 1996, 436 hospitals are redesignated for purposes of the wage index (including hospitals redesignated under both sections 1886(d)(8)(B) and 1886(d)(10) of the Act). The number of reclassifications may change because some MGCRB decisions are still under review by the Administrator.

Any changes to the wage index that result from withdrawals of requests for reclassification, wage index corrections, appeals, and the Administrator's review process will be incorporated into the wage index values published in the final rule. The changes may affect not only the wage index value for specific geographic areas, but also whether redesignated hospitals receive the wage index value for the area to which they are redesignated or a combined wage index that includes the data for both the hospitals already in the area and the redesignated hospitals. Further, the wage index value for the area from which the hospitals are redesignated may be affected.

Under § 412.273, hospitals that have been reclassified by the MGCRB are permitted to withdraw their applications within 45 days of the publication of this **Federal Register** document. The request for withdrawal of an application for reclassification that would be effective in FY 1996 must be received by the MGCRB by July 17, 1995. A hospital that requests to withdraw its application may not later request that the MGCRB decision be reinstated.

E. Proposed Changes to the Medicare Geographic Classification Review Board (MGCRB) Guidelines

Under section 1886(d)(10) of the Act, the MGCRB considers applications by hospitals for geographic reclassification for purposes of payment under the prospective payment system. Guidelines concerning the criteria and conditions for hospital reclassification are located at §§ 412.230 through 412.236. The purpose of these criteria is to provide direction, to both the MGCRB and those hospitals seeking geographic reclassification, with respect to the situations that merit an exception to the rules governing the geographic classification of hospitals under the prospective payment system. As discussed in detail below, we are proposing the following three changes to the MGCRB guidelines:

- Individual hospitals may not be reclassified from rural to other urban areas for purposes of the standardized amount.
- An individual hospital may be reclassified for purposes of the wage index only to an area that has a higher pre-reclassification average hourly wage.
- For group reclassifications either the standardized amount or the pre-reclassification average hourly wage of the area to which the hospitals seek reclassification must be higher than the standardized amount or pre-reclassification average hourly wage, respectively, of the area in which the hospitals are currently located.

In addition to the changes to the MGCRB guidelines, we propose a minor revision to § 412.266 concerning hospital requests for data from HCFA that are needed to complete applications to the MGCRB.

1. Limitations on Hospital Reclassification (§§ 412.230, 412.232, and 412.234)

a. Elimination of Reclassification from Rural to Other Urban Areas for Purposes of the Standardized Amount. Section 1886(d)(10)(C)(i)(I) of the Act requires the MGCRB to consider applications of hospitals requesting reclassification for purposes of the standardized amount. Section 1886(d)(10)(D)(i)(II) of the Act requires that the MGCRB utilize guidelines published by the Secretary for determining whether the county in which a particular hospital is located should be treated as being a part of a particular MSA. Accordingly, the MGCRB allows reclassifications for purposes of the standardized amount for individual hospitals that meet the guidelines under § 412.230, and for groups of rural and urban hospitals that represent an entire county and that meet the guidelines under §§ 412.232 and 412.243 respectively.

As required by section 1886(d)(3)(A)(iii) of the Act, effective for discharges occurring on or after October 1, 1994, the average standardized amount for hospitals located in a rural area was made equal to the average standardized amount for hospitals located in other urban areas. The standardized amount effective for those areas is now known as the other standardized amount. Large urban areas continue to receive a separate, higher standardized amount. The effect of this provision is that in FY 1995 or later, hospitals reclassified from rural to other urban areas for purposes of the standardized amount receive no increase in their standardized payment amount, since the two rates are now the same.

However, we continue to receive applications from individual hospitals seeking to be reclassified from rural to other urban areas for the standardized amount because of certain payment advantages that accompany the urban designation. When an individual

hospital reclassifies from a rural to an urban area for purposes of the standardized amount, we consider it urban for all purposes except the wage index. For some rural hospitals, the urban designation enables them to qualify as a disproportionate share hospital (DSH) and to receive special payment adjustments. For other rural hospitals that already qualify for DSH payments, the urban designation qualifies them for a higher adjustment than they would receive as a rural hospital.

We do not believe that the MGCRB provisions of the law were intended to allow hospitals to be reclassified merely for the purpose of receiving higher DSH payments. Rather, we believe that the intent of the MGCRB legislation was to provide a hospital with the opportunity to receive a more appropriate base payment rate, that is, the standardized amount. Applying to an area with an identical standardized amount does not produce this benefit. Section 1886(d)(10)(C)(i) of the Act states, in part:

''The [MGCRB] shall consider the application of any subsection (d) hospital requesting that the Secretary change the hospital's geographic classification for purposes of determining for a fiscal year—

(I) the hospital's average standardized amount under paragraph (2)(D) * * *''

Since the standardized amounts applicable to hospitals in rural areas and other urban areas are now equal, there is no reason to request geographic reclassification from a rural area to an other urban area ''for purposes of * * * the hospital's standardized amount.'' Therefore, we propose to provide under new § 412.230(a)(5)(ii) that a rural hospital may not be reclassified to an other urban area for purposes of the standardized amount. This change would be effective for hospital applications due October 2, 1995, requesting reclassification for FY 1997. (Since October 1 is a Sunday, the MGCRB will accept applications through October 2, 1995.)

We note that this change would not prevent individual rural hospitals from applying for reclassification to large urban areas, since the standardized amount for large urban areas is greater than that of rural or other urban areas. Also, group applications from all hospitals in a rural county to be reclassified to urban areas would not be affected, since these hospitals are required to meet a different ''metropolitan character'' criterion under § 412.232(b).

b. Reclassification for Purposes of the Wage Index. Section 1886(d)(10)(C)(i)(II) of the Act requires the MGCRB to consider the application of any prospective payment hospital for purposes of changing its applicable wage index. Sections 412.230, 412.232, and 412.234 set forth the types of individual and group reclassifications that are currently allowed. An individual rural hospital may reclassify to another rural area or to an urban area. An individual urban hospital may reclassify to another urban area for purposes of the wage index, the standardized amount or both. A rural group may reclassify to an urban area and an urban group may reclassify to another urban area, but only for purposes of both the wage index and the standardized amount.

We have recently received hospital requests for reclassification to a labor market area with a lower wage index. Although such requests initially would appear illogical, they can result, in some cases, in a hospital gaining reclassification to an area from which all other hospitals have reclassified, that is, to an empty labor market area. Thus, a hospital reclassified to such an area could receive a wage index value based only on its own hourly wages.

In the June 4, 1991 final rule with comment period, we stated our belief that geographic reclassification should be limited to hospitals that are disadvantaged by their current classification because they compete with hospitals that are located in the geographic area to which they seek reclassification (56 FR 25469). We do not believe it is appropriate for hospitals to seek reclassification to an area with a lower wage index in an effort to use the MGCRB system inequitably.

Therefore, we are proposing that a hospital that seeks to reclassify for the purpose of the wage index may apply for reclassification only to an area that has a higher pre-reclassified average hourly wage than the pre-reclassified average hourly wage in the hospital's original geographic area. We would revise §§ 412.230, 412.232, and 412.234 to reflect this proposal.

We recognize that this change could present a problem for hospital group requests for reclassification from a rural or other urban area to a large urban area for purposes of the standardized amount. A group of hospitals seeking to reclassify to a large urban area must apply for both the wage index and the standardized amount. It is possible that the pre-reclassified average hourly wage for the area to which the group seeks reclassification may be lower than the average hourly wage for the group's original area. The same problem could occur if a group seeks to reclassify to an area that has a higher wage index, although the standardized amount is the same (that is, a group of rural hospitals seek to reclassify to an other urban area). Therefore, for group reclassifications, we propose that either the pre-reclassified average hourly wage or the standardized amount of the area to which the hospitals seek reclassification must be higher than the corresponding figure of the area in which the hospitals are located for the group to qualify for reclassification. These revisions would be effective for applications for reclassification due by October 1, 1995, for reclassifications effective October 1, 1996.

Accordingly, we propose the following changes to the MGCRB guidelines:

- We would specify under new § 412.230(a)(5)(i) that, for purposes of the wage index, a hospital may not be reclassified to an area whose pre-reclassification average hourly wage is lower than the hospital's current pre-reclassification average hourly wage. As noted above, we would provide under § 412.230(a)(5)(ii) that a rural hospital may not be reclassified to an other urban area for purposes of the standardized amount. In addition, we would move the current limitation that a hospital may only be reclassified to one area from § 412.230(a)(1) to new § 412.230(a)(5)(iii).
- We would add a new paragraph (a)(4) to §§ 412.232 and 412.234 to provide that for rural or urban group requests for reclassification, the standardized amount of the area to which the group seeks reclassification must be higher than the group's current standardized amount, or the average hourly wage of the area to which the group seeks reclassification must be higher than the group's current average hourly wage.

2. Hospital Requests for Wage Data from HCFA

Currently, regulations at § 412.266 provide that a hospital may request from HCFA certain wage data that are necessary for a complete reclassification application to the MGCRB. The regulations also set forth dates by which HCFA must respond to such requests. Before 1994, hospitals needed to obtain data on average hourly wages directly from HCFA, since the data were not available from any other source. Beginning with the May 27, 1994, proposed rule, we have included the average hourly wage data for each hospital in the proposed and final rules as part of Table 3c. Therefore, hospitals no longer need to contact HCFA to obtain the data necessary to apply for reclassification. Thus, we are proposing

to revise § 412.266 to indicate that hospitals are to obtain the necessary data from the **Federal Register** document.

3. Elimination of the MGCRB

As discussed above, under section 1886(d)(10) of the Act, the MGCRB is charged with reviewing and making decisions on hospital requests for geographic reclassification. Since implementation of this process 5 years ago, many changes have been made to the criteria that hospitals must meet in order to qualify for reclassification. The majority of these criteria are now objective standards that are easily assessed. However, the MGCRB application process remains essentially unchanged.

We believe that it may be appropriate to revise the current MGCRB process. That is, we believe that it may now be possible to establish a simplified hospital application process and transfer the Board's decision making authority to HCFA. In general, we believe that this could result in a more efficient system and reduce the paperwork burden to hospitals. However, we would need a change in the current law to accomplish this transfer.

One area in which it may be possible to make changes if we are granted legislative authority is in the use of more current data. By statute, the MGCRB must issue all of its decisions by March 30 each year, before the final wage data for the upcoming Federal fiscal year are computed. Given the current application and review process, the best data we can use are the previous year's final wage data. If the reclassification system were revised and simplified, then it might be possible to use more current data in making the reclassification decisions. However, this would require a statutory change. We welcome comments on this issue and on how we could simplify the application process.

F. Alternative Labor Market Areas

1. Background

Almost from the beginning of the prospective payment system, we have received comments from hospitals and ProPAC questioning the use of MSA-based labor market areas to construct the wage index. In light of these concerns, we have examined a variety of options for revising wage index labor market areas.

In the May 27, 1994, proposed rule (59 FR 27724), we presented our latest research concerning possible future refinements to the wage index labor market areas. Specifically, we discussed in detail ProPAC's proposal for hospital-specific labor market areas based on each hospital's nearest neighbors, and our research and analysis on alternative labor market areas. We solicited comments on these possible revisions to the labor market areas. In this proposed rule, we will summarize our position with regard to further research into changing labor market areas and summarize the major comments we received in response to last year's proposals.

2. Summary of Research on Labor Market Areas

In the May 27, 1994 proposed rule, we described our research on alternative labor market areas including a number of hospital-specific labor market alternatives and the criteria we used to analyze each of the alternatives. We also discussed our belief that even though none of the alternative labor market areas that we studied provided a distinct improvement over the current reclassification wage index, a combination of the current MSA-based system and the ''nearest neighbors'' based system proposed by ProPAC, in which a hospital's wage index is based on its wages and those of the other hospitals closest to it, might have considerable potential for improving the wage index.

We presented an option using the current MSA-based system but generally giving a hospital's own wages a higher weight than under the current system. Under this approach, the wage index of each hospital would be based on a weighted average of that hospital's own average hourly wages and the average hourly wages of other hospitals in its labor market area (either an MSA or Statewide rural area).

We considered two alternative wage indexes. The first, known as ''M25'' or ''minimum 25,'' placed a minimum 25 percent (.25) weight on each hospital's own average hourly wage and a 75 percent weight (.75) on the average hourly wage of the other hospitals in each hospital's MSA or Statewide rural area. If a hospital's data already represented more than 25 percent of the hours in its labor market area, that higher percent was used instead in calculating the hospital's weighted average hourly wage. The resulting weighted average hourly wage was divided by the national average hourly wage to obtain each hospital's wage index value. The second wage index, known as ''M50'' or ''Minimum 50,'' differs from the first alternative only in that a minimum 50 percent weight is given to the hospital's own average hourly wage, instead of a minimum 25 percent. We refer to these as the M25/50 labor market classification options.

However, we recognized that in some cases a hospital's immediate labor market area as defined under a ''nearest neighbor'' approach could be more representative of its true labor market area than an MSA-based labor market area. To address such situations, we described a mechanism that would essentially provide a hospital with an alternative wage index derived entirely or in part from its nearest neighbors labor market. We presented two methods for reclassification, a ''simple'' method and a ''refined'' method. Both methods utilized the two wage indexes described above and like the current MGCRB reclassification system, also required a hospital's own wages to exceed certain thresholds to meet eligibility. Under the simple reclassification methodology, if a hospital's wages met certain thresholds, the average hourly wage of that hospital's 10 nearest neighbors would be substituted for the MSA or statewide rural average hourly wage in calculating the numerator of that hospital's wage index. Under the refined reclassification methodology, if certain tests were met, in addition to using the neighboring hospitals' average hourly wages in computing a hospital's wage index, the hospital's hours percentage in its nearest neighbors' labor market area would also be substituted for the weight that would otherwise be used. For example, if a hospital's wages made up 80 percent of all hospital wages in its nearest neighbors' labor market area, then the hospital would receive that weight (.80) in computing its wage index.

We also described for comment a State labor market option (SLMO) under which hospitals would be allowed to design labor market areas within their own State boundaries. We specified that aggregate payments to hospitals participating in the SLMO must be budget neutral; that is, the payments could be no higher than they otherwise would have been in the absence of the SLMO. We discussed options for applying the budget neutrality adjustment and a number of issues that would have to be resolved before a SLMO could be instituted. Among these issues were how to determine when a SLMO should be approved for a particular area. We asked for comment on whether unanimous support from all of the hospitals participating should be required, or whether it would be sufficient to obtain support from only a specific percentage of the covered hospitals.

3. Summary of Comments on Labor Market Areas

We received 74 comments on our labor market alternatives. These comments were from individual hospitals, national, State and local hospital associations, hospital consultant groups and ProPAC. Of the individual comments received, 27 were from New York hospitals and the rest were relatively evenly distributed around the country.

Many of the commenters limited their comments to specific aspects of the issues mentioned in the proposed rule. The majority focused on the M25/50 labor market classifications option. Of those, 42 were opposed, 16 gave conditional support, and 11 were in favor. The alternative reclassification mechanism received 43 comments of which 36 opposed the option, 4 gave conditional support, and 3 were in favor. We received the fewest number of comments on the SLMO proposal, with nine commenters expressing opposition, nine expressing conditional support, and two in favor.

M25/50 Labor Market Option

Many of those who commented on the M25/50 proposal expressed concern that a blended wage index would undermine the principles on which the prospective payment system is based. One commenter said that the present system is designed to allow a cost effective hospital to move toward profitability and questioned why HCFA would want to change directions. Other commenters noted that a blended wage index would reward the highest cost hospitals with high wage indexes.

Several commenters believe that we should complete a detailed financial analysis for each option. Although we did not include sample wage index values in the proposed rule, two associations did financial analyses upon which many hospitals based their comments. A number of commenters were concerned about the redistribution of funds under the blended wage index. One association commented that under such a proposal, twice as many hospitals in its State would receive a lower wage index as would benefit. Two national associations recommended that if M25/50 were adopted it should be implemented gradually because of the redistributive nature of the proposal. One association recommended that we provide ''buffer zones'' to protect hospitals from payment swings that exceeded a fixed percentage. Rural referral centers were generally opposed to the blended wage index because they believe it would create a new system with significant redistribution of funds, produce new inequities, and not correct the major problem of rural referral centers being grouped with unlike hospitals in rural areas. Both ProPAC and another commenter stated that labor market changes should be implemented in conjunction with an occupational mix adjustment. ProPAC said that it was difficult to evaluate competing labor market options without such data and that therefore it had not done so. ProPAC also stated that a blended wage index would be likely to increase occupational mix bias as more weight is attached to a hospital's own wage rate.

Several State and national hospital association representatives recommended that we convene a meeting of hospital association representatives to discuss our labor market proposals in greater detail. They called for a meeting similar to the one we held in November 1993 to discuss options for redefining labor market areas, as discussed in last year's May 27, 1994 proposed rule (59 FR 27726).

On the positive side, several hospital associations expressed their belief that a blended wage index holds potential to create a more equitable and supportable payment mechanism and could significantly reduce the number of hospitals requiring reclassification. One national association stated that a blended wage index balances the model that hospitals can purchase labor at the same price within a market with the recognition that imperfections in measuring labor markets will persist.

Reclassification Option

As noted above, the majority of commenters (36 of 43) were opposed to the alternative reclassification option. A number of commenters are concerned that the proposed 'simple' and 'refined' reclassification methodologies were too complicated. A State hospital association favored ''a simplified [reclassification] approach that could easily be administered by the intermediary.'' Some commenters stated that they disagreed with the formula-driven nature of the reclassification process and believed that it was contrary to Congressional intent. Some commenters were concerned about the effect of this proposal on group reclassifications. While some commenters decried the loss of group reclassification, another commenter believes that hospitals should be allowed to continue to use commuting data to justify their county's eligibility for reclassification. One State hospital association expressed its belief that reclassification was originally intended to benefit small, rural hospitals, but that our proposal went far beyond that original intent by allowing many more urban and large urban hospitals to qualify for reclassification.

Rural referral centers are concerned that they will lose money due to more stringent reclassification criteria in proposed methodologies.

Two commenters were concerned that the reclassification proposal did not address inequities in the Boston NECMA (New England County Metropolitan Area). They believe that the core problem is the Boston NECMA itself, which should be replaced by a central/outlying county framework.

Two hospital associations were concerned about the proposed reclassification methodologies' reliance on ''nearest neighbors''. A regional hospital association questioned why the nearest neighbor approach would be utilized for geographic reclassification purposes after it was rejected as a model for all market areas.

ProPAC stated that the reclassification options are likely to increase occupational mix bias. A hospital with a low wage rate, which results partially from a low occupational mix, would be unlikely to qualify for reclassification. However, a hospital with a high wage index (such as a large teaching hospital) would be more likely to qualify for reclassification and thus be able to ''lock in'' the occupational mix bias. One positive comment received was that the data for all hospitals in the region would be retained in calculating wage index values and that it would be an improvement over the current system.

State Labor Market Option

Regarding this option, the main area of concern was the level of support required to allow hospitals in a State to select the SLMO. Some commenters expressed concern that if a SLMO could be established only by an overwhelming or unanimous majority of a State's hospitals, the possibility of such unanimity would be unrealistic given the requirement of budget neutrality. As one hospital stated, ''We do not understand the circumstances in which a hospital that would lose reimbursement under this method would consent to participate.'' On the other hand, some commenters expressed concern that if we were to allow the creation of a SLMO with less than full agreement by all participating hospitals, it could create a system where the few would suffer greatly at the whim of the many.

4. Conclusion

As the comment summary illustrates, there was no consensus among the

commenters on the choice for new labor market areas. Many individual hospitals that commented expressed dissatisfaction with all of the proposals. However, several State hospital association representatives commented that while the M25/50 labor market classification option and the simple and refined reclassification options were not ready for implementation, they did merit further study. Based on the commenters' suggestions that we convene a group of hospital association representatives to discuss these issues, in February we sent letters to association representatives that participated in our November 1993 meeting on labor market issues in which we solicited ideas for additional types of labor market research that HCFA should conduct. None of the individuals we contacted suggested any new avenues for research. While we believe a blended wage index such as the M25 or M50 option may have merit, we are not planning to propose it at this time given the comments we received. Although we believe that the response to the various proposals we have made in the last couple of years demonstrates that there is no clear ''best'' labor market area option to pursue, we are willing to continue research on possible labor market refinements. However, we believe we have exhausted most available avenues for new research.

IV. Other Decisions and Proposed Changes to the Prospective Payment System for Inpatient Operating Costs

A. Payment for Transfer Cases (§ 412.4)

The prospective payment system distinguishes between ''discharges,'' situations in which a patient leaves an acute-care hospital after receiving complete treatment, and ''transfers,'' situations in which the patient is transferred to another acute-care hospital for related care. If a full DRG payment were made to each hospital involved in a transfer situation irrespective of the length of time the patient spent in the ''sending'' hospital before transfer, this would create a strong incentive to increase transfers, thereby unnecessarily endangering patients' health. Therefore, the regulations at § 412.4(d) provide that, in a transfer situation, full payment is made to the final discharging hospital and each transferring hospital is paid a per diem rate for each day of the stay, not to exceed the full DRG payment that would have been made if the patient had been discharged without being transferred.

Currently, the per diem rate paid to a transferring hospital is determined by dividing the full DRG payment that would have been paid in a nontransfer situation by the geometric mean length-of-stay for the DRG into which the case falls. Transferring hospitals are also eligible for outlier payments for cases that meet the cost outlier criteria established for all cases (nontransfer and transfer cases alike) classified to the DRG. They are not, however, eligible for day outlier payments. Two exceptions to the transfer payment policy are transfer cases classified into DRG 385 (Neonates, Died or Transferred to Another Acute Care Facility) or DRG 456 (Burns, Transferred to Another Acute Care Facility), which are not paid on a per diem basis but instead receive the full DRG payment.

In the May 27, 1994 proposed rule, we proposed to revise our payment methodology for transfer cases. Under the proposal, for the first day of a transfer, the per diem amount would be doubled, while a flat per diem amount would be paid for each succeeding day, up to the full DRG payment (59 FR 27734). We also proposed at that time to change our definition of a transfer case to include cases transferred from an acute-care setting paid under the prospective payment system to a hospital or unit excluded from the prospective payment system. When we published the September 1, 1994 final rule with comment period, we withdrew these proposals for FY 1995 (59 FR 45362) based on negative comments and further analysis. In that final rule, however, we stated our intention to continue to evaluate the appropriateness of our transfer policy.

For FY 1996, we are again proposing to adopt a graduated per diem payment methodology for transfer cases. Again, under this proposed methodology, we would pay double the per diem amount for the first day and the per diem amount for subsequent days. We are not proposing to revise our definition of transfers at this time. However, we note that we are concerned about an accelerating trend toward earlier discharges to post-acute settings. We are, therefore, soliciting public comments regarding this trend and the implications this has for the design of our payment systems. In its March 1, 1995 report, ProPAC supported our proposed payment methodology (Recommendation 11) and expressed its concern ''about the continuity of care across treatment settings.'' The Commission also indicated its willingness to work with the Secretary to explore this issue. The following discussion describes our proposed change to the transfer payment methodology and some of the issues identified by our further analysis of transfer cases.

1. Payment for Transfer Cases

As part of a study of Medicare transfer cases funded by HCFA (''Transfers of Medicare Hospital Patients under the Prospective Payment System'', PM–191–HCFA, January 1994), RAND found that among cases transferred before reaching the geometric mean length-of-stay, 1-day stays cost 2.096 times the per diem payment amount for cases in nonsurgical DRGs and 2.576 times the per diem for surgical DRGs (based on FY 1991 data). Among nonsurgical transfer cases, the costs of 2-day stays were about 1.215 times the per diem payment amount, and cases transferred after 2 days cost about 10 percent more than the applicable per diem amount. Among surgical cases, the costs of stays of 2 or more days were actually about 7 percent below the applicable per diem amount.

In order to pay hospitals more appropriately for the treatment they furnish to patients before transfer, we are proposing to revise § 412.4(d)(1) to pay transfers twice the per diem amount for the first day of any transfer stay plus the per diem amount for each of the remaining days before transfer, up to the full DRG amount. (Our concerns about basing the gradation of the per diem scale on the actual coefficients as estimated by RAND were described in last year's proposed and final rules, as referenced above.) We are proposing that this change be applied uniformly for both medical and surgical transfer cases; although surgical transfer cases appear to be more costly on average for the first day, they are relatively less costly for the second day and beyond.

If the patient is transferred again before final discharge, then, under the change we are proposing, all sending hospitals involved would be paid using the graduated per diem methodology rather than the flat per diem rate they currently receive. For example, a case transferred from a community hospital to a tertiary care hospital for a procedure that is not performed at the community hospital, may subsequently be transferred back to the community hospital, which ultimately discharges the patient home. In such a case, the community hospital and the tertiary care hospital would be paid using the transfer payment methodology for the first two phases of the hospitalization, and the community hospital would also receive a DRG amount for the final phase when it discharges the patient. This is our current policy, as well. Each phase of the hospitalization is assigned a DRG based on the diagnosis and procedures applicable to that particular

phase; therefore, a different DRG could be assigned to each phase.

Transfer cases would continue to be eligible for additional payments as cost outliers. In the September 1, 1993 final rule, we set forth revised qualifying criteria for transfer cases to be eligible for cost outlier payments (58 FR 46305). Before that change, transfer cases were required to meet the same criteria to qualify for cost outliers as were discharges. The revised policy adjusts the outlier threshold for transfer cases to reflect the fact that transfer cases were receiving a reduced payment amount under the per diem methodology. Last year, when we revised the cost outlier qualifying criteria so that it was based on a fixed loss threshold, the qualifying criteria for transfers continued to reflect the fact that their payment amounts are reduced relative to discharges. Specifically, the cost outlier threshold for transfer cases is equal to the fixed loss amount (for FY 1995, the prospective payment rate for the DRG plus $20,500), divided by the geometric mean for the DRG, multiplied by the length of stay before transfer. Although we did not state this explicitly in the September 1, 1994 final rule, it is the policy we have employed, and intend to continue to employ, since the fixed loss threshold was implemented October 1, 1994.

Using the proposed graduated per diem methodology, RAND estimated the payment-to-cost ratio of transfer cases that were transferred before reaching the geometric mean length of stay would be 0.9321. While this is somewhat less than the payment-to-cost ratio for nontransfer cases (0.9645), it represented a significant improvement over the current ratio for transfer cases (0.7224). Using more recent data (FY 1993 MedPAR) and payment policies (FY 1995), we estimated the improvement in the payment-to-cost ratio for transfer cases to be from 0.7548 under the current flat per diem policy to 0.9701 under the proposed graduated per diem policy.

Section 109 of the Social Security Act Amendments of 1994 (Public Law 103–432) authorized the Secretary to make adjustments to the prospective payment system standardized amounts so that adjustments to the payment policy for transfer cases do not affect aggregate payments. In light of this authority, we believe the benefits of the graduated per diem methodology now outweigh the concerns that we expressed in the September 1, 1994 final rule. Our methodology for applying this adjustment is described in section II of the Addendum to this proposed rule.

Finally, we are also proposing to revise the DRG recalibration methodology so that transfer cases are treated as a proportion of a full case based on the length of stay (as discussed above in section II.C of this preamble). Specifically, we are proposing to weight transfer cases as less than a full discharge based on the proportion of the number of days the patient was hospitalized before transfer. This would have the effect of increasing the relative weights of the DRGs with a high number of short stay transfer cases.

2. Definition of a Transfer Case

Under current policy, cases that are transferred from an acute-care hospital paid under the prospective payment system to another type of provider or unit are considered to be discharges (as opposed to transfers) from the acute-care hospital. As a discharge, payment for the case is the full DRG amount.

As noted above, we are concerned that the current trend of declining average lengths of stay as hospitals transfer Medicare patients into alternative health care settings (other than acute care) in less time may result in a misalignment of payments and costs under our existing payment systems. In particular, we are concerned that hospitals paid under the prospective payment system may be shifting costs (for which they are compensated through the DRG payments) to alternative settings, which are in turn paid on a cost basis.

In the September 1, 1994 final rule, we explained our rationale for proposing to consider patients transferred to excluded hospitals or units as transfers rather than discharges. Briefly, our proposal was ''based upon the premise that an increasing number of patients are being transferred to excluded hospitals or units and that these patients are still in the acute care phase of treatment when they are transferred.'' (See 59 FR 45364). We also explained our reason for continuing to consider patients going to a skilled nursing facility (SNF) as discharges. In that regard, we stated that ''(w)e did not propose to consider discharges to SNFs as transfers because we do not consider SNFs to be hospital settings; thus, there is generally little overlap with acute care hospitals in the services provided.'' Based upon further analysis of patient discharge trends and research on the type and outcomes of care provided in SNFs, as well as anecdotal evidence drawn from the health care industry, we no longer believe there is a clear distinction between the type of care provided in SNFs and the type of care provided in hospitals or units excluded from the prospective payment system, such as rehabilitation facilities and long-term care hospitals.

Therefore, we considered proposing to expand our definition of transfers to include not only cases going from one hospital paid under the prospective payment system to another but also cases transferred to excluded hospitals and units as well as SNFs. However, as discussed below, our analysis has identified problems that need to be addressed. Nevertheless, once we are convinced these problems can be effectively handled, we intend to proceed with implementing policy changes designed to remedy this issue.

First, our analysis (as well as anecdotal evidence) indicates that the settings where acute care is now being delivered are rapidly expanding and evolving. To the extent that payment is affected by where a patient goes after an acute hospitalization, it is critical to understand the clinical capabilities of different types of settings, so that the incentives treated by the payment system do not unduly influence the choice of where to send a patient for post-acute care. That is, all like provider settings should be treated equally in terms of payment incentives. Currently, the settings that are considered as alternatives to acute care are expanding rapidly, and we want to be sure that we do not create unforeseen financial incentives toward one alternative over another by any redefinition of transfers.

In addition, as discussed in last year's final rule, hip replacement cases (which, as a group, constitute one of the largest sources of Medicare cases going from acute to post-acute settings) would be systematically underpaid under either the current or the proposed per diem methodology. This is because the cost of the surgery including the prosthetic device, which is incurred in the first day or two of the stay, constitutes a large percentage of the total cost of the stay. A graduated per diem would have to be skewed greatly toward the first day to approximate the daily cost distribution.

We are soliciting public comment with regard to these issues. Specifically, we are interested in suggestions on how best to adapt our payment methodologies for hospitals and units (both acute care paid under the prospective payment system and those excluded from this system), SNFs, and home health agencies in response to the evolving integrated delivery systems. We are particularly interested in comments and suggestions on how to design a comprehensive payment system that better matches payments with the costs providers actually incur

in furnishing care (that is, reducing hospital payments when a significant phase of a patient's acute episode is treated in other than an acute hospital inpatient setting). A major issue in developing such an integrated payment system is to neutralize the incentives that arise in terms of where patients are treated. For example, hospitals should continue to be adequately compensated for acute inpatient hospitalization where appropriate, so that there will not be an adverse incentive to move patients prematurely to alternative settings.

We will continue to analyze and explore various solutions to this issue, including any that are provided by commenters.

B. Rural Referral Centers (§ 412.96)

Under the authority of section 1886(d)(5)(C)(i) of the Act, § 412.96 sets forth the criteria a hospital must meet in order to receive special treatment under the prospective payment system as a rural referral center. For discharges occurring before October 1, 1994, rural referral centers received the benefit of payment based on the other urban payment rate rather than the rural payment rate. As of that date, the other urban and rural payment rates are the same. However, rural referral centers continue to receive special treatment under both the disproportionate share hospital payment adjustment and the criteria for geographic reclassification.

One of the criteria under which a rural hospital may qualify as a referral center is to have 275 or more beds available for use. A rural hospital that does not meet the bed size criterion can qualify as a rural referral center if the hospital meets two mandatory criteria (number of discharges and case-mix index) and at least one of three optional criteria (medical staff, source of inpatients, or volume of referrals). With respect to the two mandatory criteria, a hospital may be classified as a rural referral center if its—

- Case-mix index is at least equal to the lower of the median case-mix index for urban hospitals in its census region, excluding hospitals with approved teaching programs, or the median case-mix index for all urban hospitals nationally; and
- Number of discharges is at least 5,000 discharges per year or, if fewer, the median number of discharges for urban hospitals in the census region in which the hospital is located. (The number of discharges criterion for an osteopathic hospital is at least 3,000 discharges per year.)

1. Case-Mix Index

Section 412.96(c)(1) provides that HCFA will establish updated national and regional case-mix index values in each year's annual notice of prospective payment rates for purposes of determining rural referral center status. In determining the proposed national and regional case-mix index values, we would follow the same methodology we used in the November 24, 1986 final rule, as set forth in regulations at § 412.96(c)(1)(ii). Therefore, the proposed national case-mix index value includes all urban hospitals nationwide, and the proposed regional values are the median values of urban hospitals within each census region, excluding those with approved teaching programs (that is, those hospitals receiving indirect medical education payments as provided in § 412.105).

These values are based on discharges occurring during FY 1994 (October 1, 1993 through September 30, 1994) and include bills posted to HCFA's records through December 1994. Therefore, in addition to meeting other criteria, we are proposing that to qualify for initial rural referral center status or to meet the triennial review standards for cost reporting periods beginning on or after October 1, 1995, a hospital's case-mix index value for FY 1994 would have to be at least—

- 1.3165; or
- Equal to the median case-mix index value for urban hospitals (excluding hospitals with approved teaching programs as identified in § 412.105) calculated by HCFA for the census region in which the hospital is located.

The median case-mix values by region are set forth in the table below:

Region	Case-mix index value
1. New England (CT, ME, MA, NH, RI, VT)	1.2186
2. Middle Atlantic (PA, NJ, NY)	1.2090
3. South Atlantic (DE, DC, FL, GA, MD, NC, SC, VA, WV)	1.3112
4. East North Central (IL, IN, MI, OH, WI)	1.2280
5. East South Central (AL, KY, MS, TN)	1.2782
6. West North Central (IA, KS, MN, MO, NE, ND, SD)	1.1912
7. West South Central (AR, LA, OK, TX)	1.2995
8. Mountain (AZ, CO, ID, MT, NV, NM, UT, WY)	1.3606
9. Pacific (AK, CA, HI, OR, WA)	1.3300

The above numbers will be revised in the final rule to the extent required to reflect the updated MedPAR file, which will contain data from additional bills received for discharges through September 30, 1994.

For the benefit of hospitals seeking to qualify as referral centers or those wishing to know how their case-mix index value compares to the criteria, we are publishing each hospital's FY 1994 case-mix index value in Table 3C in section V of the addendum to this proposed rule. In keeping with our policy on discharges, these case-mix index values are computed based on all Medicare patient discharges subject to DRG-based payment.

2. Discharges

Section 412.96(c)(2)(i) provides that HCFA will set forth the national and regional numbers of discharges in each year's annual notice of prospective payment rates for purposes of determining referral center status. As specified in section 1886(d)(5)(C)(ii) of the Act, the national standard is set at 5,000 discharges. However, we are proposing to update the regional standards. The proposed regional standards are based on discharges for urban hospitals' cost reporting periods that began during FY 1993 (that is, October 1, 1992 through September 30, 1993). That is the latest year for which we have complete discharge data available.

Therefore, in addition to meeting other criteria, we are proposing that to qualify for initial rural referral center status or to meet the triennial review standards for cost reporting periods beginning on or after October 1, 1995, the number of discharges a hospital must have for its cost reporting period that began during FY 1994 would have to be at least—

- 5,000; or
- Equal to the median number of discharges for urban hospitals in the census region in which the hospital is located, as indicated in the table below.

Region	Number of discharges
1. New England (CT, ME, MA, NH, RI, VT)	6808
2. Middle Atlantic (PA, NJ, NY)	8611
3. South Atlantic (DE, DC, FL, GA, MD, NC, SC, VA, WV)	7320
4. East North Central (IL, IN, MI, OH, WI)	6959
5. East South Central (AL, KY, MS, TN)	5520
6. West North Central (IA, KS, MN, MO, NE, ND, SD)	5001
7. West South Central (AR, LA, OK, TX)	4473
8. Mountain (AZ, CO, ID, MT, NV, NM, UT, WY)	8421
9. Pacific (AK, CA, HI, OR, WA)	5594

We reiterate that, to qualify for rural referral center status for cost reporting periods beginning on or after October 1, 1995, an osteopathic hospital's number of discharges for its cost reporting period that began during FY 1994 would have to be at least 3,000.

3. Retention of Referral Center Status

Section 412.96(f) states that each hospital receiving the referral center adjustment is reviewed every 3 years to determine if the hospital continues to meet the criteria for referral center status. To retain status as a referral center, a hospital must meet the criteria for classification as a referral center specified in § 412.96(b)(1) or (b)(2) or (c) for 2 of the last 3 years, or for the current year. A hospital may meet any one of the three sets of criteria for individual years during the 3-year period or the current year. For example, a hospital may meet the two mandatory requirements in § 412.96(c)(1) (case-mix index) and (c)(2) (number of discharges) and the optional criterion in paragraph (c)(3) (medical staff) during the first year. During the second or third year, the hospital may meet the criteria under § 412.96(b)(1) (rural location and appropriate bed size).

A hospital must meet all of the criteria within any one of these three sections of the regulations in order to meet the retention requirement for a given year. That is, it will have to meet all of the criteria of § 412.96(b)(1) or § 412.96(b)(2) or § 412.96(c). For example, if a hospital meets the case-mix index standards in § 412.96(c)(1) in years 1 and 3 and the number of discharge standards in § 412.96(c)(2) in years 2 and 3, it will not meet the retention criteria. All of the standards would have to be met in the same year.

In accordance with § 412.96(f)(2), the review process is limited to the hospital's compliance during the last 3 years. Thus, if a hospital meets the criteria in effect for at least 2 of the last 3 years or if it meets the criteria in effect for the current year (that is, the criteria for FY 1996 outlined above in this section of the preamble), it will retain its status for another 3 years. We have constructed the following chart and example to aid hospitals that qualify as referral centers under the criteria in § 412.96(c) in projecting whether they will retain their status as a referral center.

Under § 412.96(f), to qualify for a 3-year extension effective with cost reporting periods beginning in FY 1996, a hospital must meet the criteria in § 412.96(c) for FY 1996 or it must meet the criteria for 2 of the last 3 years as follows:

For the cost reporting period beginning during FY	Use hospital's case-mix index for FY	Use the discharges for the hospital's cost reporting period beginning during FY	Use numerical standards as published in the **Federal Register** on
1995	1993	1993	Sept. 1, 1994.
1994	1992	1992	Sept. 1, 1993.
1993	1991	1991	Sept. 1, 1992.

Example: A hospital with a cost reporting period beginning July 1 qualified as a referral center effective July 1, 1993. The hospital has fewer than 275 beds. Its 3-year status as a referral center is protected through June 30, 1996 (the end of its cost reporting period beginning July 1, 1995). To determine if the hospital should retain its status as a referral center for an additional 3-year period, we will review its compliance with the applicable criteria for its cost reporting periods beginning July 1, 1993, July 1, 1994, and July 1, 1995. The hospital must meet the criteria in effect either for its cost reporting period beginning July 1, 1996, or for two out of the three past periods. For example, to be found to have met the criteria at § 412.96(c) for its cost reporting period beginning July 1, 1994, the hospital's case-mix index value during FY 1992 must have equaled or exceeded the lower of the national or the appropriate regional standard as published in the September 1, 1993 final rule with comment period. The hospital's total number of discharges during its cost reporting year beginning July 1, 1992, must have equaled or exceeded 5,000 or the regional standard as published in the September 1, 1993 final rule with comment period.

For those hospitals that seek to retain referral center status by meeting the criteria of § 412.96(b)(1) (i) and (ii) (that is, rural location and at least 275 beds), we will look at the number of beds shown for indirect medical education purposes (as defined at § 412.105(b)) on the hospital's cost report for the appropriate year. We will consider only full cost reporting periods when determining a hospital's status under § 412.96(b)(1)(ii). This definition varies from the number of beds criterion used to determine a hospital's initial status as a referral center because we believe it is important for a hospital to demonstrate that it has maintained at least 275 beds throughout its entire cost reporting period, not just for a particular portion of the year.

C. Determination of Number of Beds Used in Calculating the Indirect Medical Education Adjustment (§ 412.105)

In the September 1, 1994 final rule (59 FR 45373), in an effort to clarify our policy, we amended the regulations at § 412.105(b), which describe how to determine the number of beds in a hospital for purposes of the indirect medical education adjustment. At that time, we added language to the regulations that specifically excludes as a bed ''nursery'' beds assigned to newborns ''that are not in intensive care areas.'' This change was supposed to have left little doubt that, with regard to infants, only beds in a nursery used for newborns (see section 2815 of the Provider Reimbursement Manual-Part 2) are excluded from the count. As we stated in the preamble to the May 27, 1994 proposed rule (59 FR 27741), we made this revision ''to exclude specifically only beds assigned to newborns *in the nursery*'' (emphasis added). Furthermore, when we published the final rule, we added the reference to nursery beds directly into the text of § 412.105(b) ''(t)o prevent any future confusion about the term ''newborn'' (59 FR 45374).

Although we received no public comments as to whether beds occupied by sick infants in areas other than a neonatal intensive care area or a nursery could be counted, we continue to receive questions on this issue. Therefore, we are once again revising § 412.105(b) to clarify our bed counting policy. This year, rather than specifically identifying intensive care beds occupied by infants as eligible to be counted, we are deleting that phrase and inserting the phrase ''beds in the healthy newborn nursery.'' Thus, our policy is and has been that only beds in a healthy, or regular, baby nursery are excluded from the count. All other beds available for occupation by a newborn are to be counted.

D. Disproportionate Share Adjustment (§ 412.106)

Section 1886(d)(5)(F) of the Act provides for additional payments for hospitals that serve a disproportionate share of low income patients. A hospital's disproportionate share adjustment is determined by calculating two patient percentages (Medicare Part A/SSI covered days to total Medicare covered days and Medicaid but not Medicare Part A covered days to total inpatient hospital days), adding them together, and comparing that total percentage to the hospital's qualifying criteria. These calculations are done by HCFA and the fiscal intermediary on a Federal fiscal year basis. However, § 412.106(b)(3) states that if a hospital prefers that HCFA use its cost reporting period instead of the Federal fiscal year, it must furnish to its intermediary, in machine-readable format as prescribed by HCFA, data on its Medicare Part A

patients for its cost reporting period. These data take the place of the Federal fiscal year MedPAR file data in obtaining the Medicare Part A/SSI percentage. However, we match the hospital's data to the HCFA MedPAR data to ensure that the hospital is reporting actual Medicare Part A patient days. In addition, we have required that a hospital accept the recalculated percentage, even if it is lower than the Federal fiscal year percentage.

In the last few years, this process has proven to be unsatisfactory for several reasons. First, it is an administrative burden for the hospital to prepare a tape that includes all its Medicare Part A inpatient days. In addition, the hospital's tape data have seldom exactly matched the MedPAR data. In that case, we can use only the data that match. Finally, and probably often due to this second problem, the resulting disproportionate patient percentages are invariably lower than the original HCFA determined percentage. Therefore, we are proposing to alleviate these problems by continuing to provide hospitals an alternative to base their percentage on their cost reporting year, but relieving them of the tape requirement.

We propose that, if a hospital wishes a recalculation based on its cost reporting period, the hospital would notify HCFA in writing of its request that the Medicare Part A/SSI percentage be calculated based on its own cost reporting year. The hospital would be required to provide HCFA with its name, provider number, and cost report period end date. HCFA, in turn, would use all MedPAR records for that hospital from the requested time period, as opposed to only those records that matched between the MedPAR file and the hospital's tape data. This should provide hospitals with a better opportunity to possibly increase their Medicare Part A/SSI percentages.

In addition, we propose that we would process these requests on a quarterly basis. Processing these individual requests for recalculation on a flow basis has become an administrative burden on the available HCFA computer processing resources. Therefore, we believe it is necessary to batch these requests and run the MedPAR data on a set schedule. This will be much more efficient and predictable.

Therefore, we are proposing to revise § 412.106(b)(3) to provide that HCFA will accept a hospital's written request, transmitted through its fiscal intermediary, for a recalculation of its Medicare Part A/SSI percentage based on its cost reporting period. The written request would include the hospital's name, provider number, and cost report period end date. We would perform a recalculation only once per hospital per cost report period, and the resulting percentage becomes the hospital's official Medicare Part A/SSI percentage for that period.

E. Essential Access Community Hospitals (EACHs) and Rural Primary Care Hospitals (RPCHs) (§§ 412.109, 413.70, 424.15, 485.603, 485.606, 485.614, 485.620, and 485.639)

On May 26, 1993, we published a final rule to implement the EACH program (58 FR 30630). The rule set forth the requirements for designating certain hospitals as EACHs or RPCHs, the conditions that an RPCH must meet to participate in Medicare, and the rules for Medicare payment for services furnished by EACHs and RPCHs. The final rule implemented section 1820 of the Act, as added by sections 6003(g) and 6116(b)(2) of Public Law 101–239 and revised by section 4008(d) of Public Law 101–508. The amendments were intended to promote regionalization of rural health services in grant States, improve access to hospital and other health services for rural residents, and enhance the provision of emergency and other transportation services related to health care.

Section 102 of the Social Security Act Amendments of 1994, Public Law 103–432 (SSAA '94), made significant changes in the provisions of the Medicare law governing the EACH/RPCH program. To implement these changes, we propose to revise the regulations as follows:

1. Designation of Urban Hospitals as EACHs (§ 412.109)

Section 1820(e) of the Act previously provided that only rural facilities could be designated as EACHs, and all EACHs were to be paid as sole community hospitals (SCHs). Section 102(b)(1) of SSAA '94 revised section 1820(e) of the Act to allow hospitals located in urban areas to be designated as EACHs if they have entered into network agreements with RPCHs and meet other applicable requirements. As EACHs, these urban facilities may qualify for EACH grants. However, they are not eligible for the special payment methodology afforded rural EACHs. For payment purposes, rural EACHs are treated as sole community hospitals (SCH). Section 1886(d)(5)(D) of the Act was amended to clarify that only hospitals designated as EACHs *and* located in rural areas are treated as SCHs for payment purposes. Urban EACHs will therefore continue to be paid at the applicable urban rates.

To implement this provision, we propose to revise § 412.109 to remove the current rural location requirement for EACH designation, and to provide that payment as an SCH is limited to EACHs in rural areas. As explained below, we also propose to revise that section to allow a State that has received an EACH grant to designate an otherwise qualified hospital in an adjoining State as an EACH.

In conjunction with this change, we are making a technical correction to a reference in § 485.603.

2. Designation of EACHs and RPCHs in States Adjoining Grant States (§§ 412.109 and 485.606)

Section 1820(c) of the Act previously provided that hospitals could be designated as EACHs only if they were located in States receiving EACH grants. Section 1820(i)(2) of the Act did authorize designation of RPCHs outside the grant States; however, the number of facilities designated under this authority was limited to 15 nationally, and only the Secretary, not individual grant States, could make the designation. Section 1820(i)(2) of the Act further requires the Secretary, in making the special designations, to give preference to facilities that have entered into network agreements with other facilities in grant States, thus indicating a strong preference for designation of RPCHs in States adjoining grant States. Section 102(b)(2) of SSAA '94 amended section 1820 of the Act to authorize the individual grant States to make designations of both EACHs and RPCHs in adjoining States, if the facilities so designated are otherwise qualified and have entered into network agreements with EACHs or RPCHs in the grant State. The legislation does not limit the number of such designations. To implement this change, we propose to revise §§ 412.109 and 485.606 to permit these new designations of EACHs and RPCHs by adjacent States that have received grants. We propose that hospitals designated in this way will be required to meet other applicable requirements, and we plan to make such designations subject to review and approval by the HCFA regional offices on the same basis as designations of facilities in the grant State. That is, the designation will not result in recognition of a facility as an EACH or RPCH for Medicare or Medicaid purposes until HCFA has determined that the requirements are met.

3. Designation of EACHs and RPCHs by States That Have Received Grants (§§ 412.109 and 485.606)

Section 1820(a)(1) of the Act establishes a program under which the Secretary makes grants available to not more than seven States to carry out certain activities, including designating hospitals or facilities in the State as either an EACH or an RPCH. Because there is no assurance that funding of this grant program will continue, some or all of the seven States may not receive grants under section 1820(a)(1) of the Act in the future. Since States may not continue to ''receive'' grants, we propose to revise the regulations pertaining to EACHs and RPCHs by replacing references to ''States receiving grants'' with references to ''States that have received grants'' or ''a State that has received a grant,'' as appropriate. Specifically, we propose to revise the designation of EACHs and RPCHs under current § 412.109(b) and (c), and § 485.606, respectively, to include these revised references. Should the grant program expire, these proposed revisions would prevent any uncertainty that may arise as to the status of designations made by States that have received grants.

4. Change in Payment for Outpatient RPCH Services (§ 413.70)

Previously, section 1834(g) of the Act provided that payments to RPCHs for outpatient services under the cost-based facility fee plus professional charges method were to be determined under section 1833(a)(2)(B) of the Act. That section states that payment is to be made at the lesser of the reasonable cost of the services or the customary charges for the services. (This is commonly referred to as ''LCC,'' that is, the lesser of costs or charges.) Current regulations at § 413.70(b)(2)(i) require that payment to RPCHs under the cost-based facility fee plus professional services be made in accordance with the LCC principle. This principle is set forth under § 413.13.

Section 102(e)(2) of SSAA '94 amended section 1834(g)(1) of the Act to provide that payment for outpatient RPCH services under the cost-based facility fee plus professional charges method are to be determined without regard to the amount of the customary charge. To implement this change, we propose to amend § 413.70(b)(2)(i) to provide that for payment for RPCH outpatient services made under the cost-based RPCH payment plus professional services method, the principle of the lesser of costs or charges does not apply.

5. Content of Required Physician Certification (§ 424.15)

Section 1814(a)(8) of the Act previously provided that Medicare Part A could pay for inpatient RPCH services only if a physician certified that the services were required to be furnished immediately on a temporary, inpatient basis. Section 102(a)(3) of SSAA '94 deleted this requirement and provided instead that Medicare Part A will pay for the inpatient RPCH services only if a physician certifies that the individual may reasonably be expected to be discharged or transferred to a hospital within 72 hours after admission to the RPCH. We are proposing to revise § 424.15 to reflect the new requirement.

6. Length-of-Stay Requirement for RPCHs (§§ 485.614 and 485.620)

Section 1820(f)(1)(F) of the Act previously allowed all RPCHs to keep inpatients no longer than 72 hours before discharging them or transferring them to a full-service hospital, unless discharge or transfer was precluded by inclement weather or other emergency conditions. Section 102(a)(1) of SSAA '94 removed the per-stay limitation and substituted for it a provision under which the Secretary may terminate the designation of a facility as an RPCH if the Secretary finds that the average length of stay in the preceding year exceeded 72 hours. The provision further states that periods of stay in excess of 72 hours that occurred because discharge or transfer were precluded by inclement weather or other emergency conditions are not to be taken into account in computing a facility's average length of stay for this purpose.

To implement this change, we propose to revise §§ 485.614 and 485.620 to delete the current per-stay limitation, and to replace it with a requirement for a facility-wide average length of stay that does not exceed 72 hours, excluding parts of stays in excess of 72 hours that occurred because of inclement weather or other emergencies. In the case of a currently participating RPCH, termination of the RPCH designation can be made effective only by ending Medicare participation. Therefore, we propose to revise § 489.53 to authorize termination of the provider agreement of an RPCH if the Secretary finds that it does not maintain the required average length of stay.

7. Restriction on Scope of Surgical Services to RPCH Inpatients (§ 485.614 and new § 485.639)

Before the Social Security Act Amendments of 1994 were enacted, there were no explicit restrictions on the type or extent of surgical activity that could be performed in a RPCH. These facilities and their practitioners were, however, required to conform to applicable State licensure and scope of practice laws. Section 102(a)(1) of SSAA '94 added an explicit restriction on surgical activity by RPCHs. Specifically, a State may not designate a facility as an RPCH if the facility provides inpatient hospital services consisting of surgery or any other service requiring the use of general anesthesia (other than surgical procedures specified by the Secretary under section 1833(i)(1)(A) of the Act), unless the attending physician certifies that the risk associated with transferring the patient to a hospital for such services outweighs the benefits of transferring the patient to a hospital for such services. The procedures specified by the Secretary under section 1833(i)(1)(A) of the Act are those that are performed on an inpatient basis in a hospital but which also can be performed safely on an ambulatory basis in an ambulatory surgical center (ASC) or in a hospital outpatient department. Implementing regulations for section 1833(i)(1)(A) of the Act are set forth at § 416.65. HCFA also publishes a list of covered surgical procedures in Addendum A to Part 3 of the *Medicare Carriers Manual.*

To implement this change, we propose to revise § 485.614 to reflect the new statutory provision. We note that the law still does not limit the scope of surgical procedures that can be performed for RPCH outpatients, and that both hospitals and ASCs, the other two facilities in which ASC procedures can be performed, are subject to specific health and safety rules on administration of anesthesia and performance of the surgery. To ensure adequate health and safety protection for RPCH patients and to apply Medicare standards uniformly to ASC-type procedures, we are further proposing to add, at § 485.639, a new RPCH condition of participation for surgical services. We note that the new condition would apply the same rules in the RPCH as now apply in an ASC, and that it would apply to both inpatient and outpatient surgery. Given the similarities between RPCHs and ASCs and the fact that identical procedures can be performed in each, we believe uniform health and safety rules are needed.

F. Rebasing the Hospital Market Basket

Effective for cost reporting periods beginning on or after July 1, 1979, we developed and adopted a hospital input price index (that is, the hospital ''market basket'') for operating costs. Although

''market basket'' technically describes the mix of goods and services used to produce hospital care, this term is also commonly used to denote the input price index, which includes both the market basket and the price proxy series that are used to measure price changes over time. Accordingly, the term ''market basket'' as used in this document refers to the hospital input price index.

The percentage change in the market basket reflects the average change in the price of goods and services purchased by hospitals to furnish inpatient care. We first used the market basket to adjust hospital cost limits by an amount that reflected the average increase in the prices of goods and services used to furnish inpatient care. This approach linked the increase in the cost limits to the efficient utilization of resources.

With the inception of the prospective payment system on October 1, 1983, we continued to use the hospital market basket to update each hospital's 1981 inpatient operating cost per discharge used in establishing the FY 1984 standardized payment amounts. In addition, the projected change in the hospital market basket has been the integral component of the update factor by which the prospective payment rates and the rate-of-increase limits applicable to hospitals and hospital units excluded from the prospective payment system are updated every year.

The hospital market basket is a fixed-weight price index constructed in two steps. First, a base period is selected and the proportion of total expenditures accounted for by designated spending categories is calculated. These proportions are called cost or expenditure weights. Second, a rate of price increase for each spending category is multiplied by the cost weight for the category. The sum of these products for all cost categories yields the percentage change in the market basket, an estimate of price changes for a fixed quantity of purchased goods and services.

The market basket is described as a fixed-weight index because it answers the question of how much more or less it would cost, at a later time, to purchase the same mix of goods and services that was purchased in the base period. The effects on total expenditures resulting from changes in the quantity or mix of goods and services purchased subsequent to the base period are not considered. For example, shifts from an inpatient to an outpatient setting for the furnishing of a certain type of care might affect the volume of inpatient goods and services purchased by the hospital but would not be factored into the percentage change in the hospital market basket.

We believe that it is desirable to rebase the market basket periodically, so the cost weights reflect changes in the mix of goods and services (hospital inputs) that hospitals purchase in furnishing inpatient care. We last rebased the hospital market basket cost weights effective for FY 1991. That market basket reflected base-year data from 1987 in the construction of the cost weights. At that time, we also established a separate market basket for hospitals and hospital units excluded from the prospective payment system. Excluded hospitals and units tend to have different case mixes, practice patterns, and composition of inputs than hospitals subject to the prospective payment system.

When prospective payment for capital-related costs was introduced effective October 1, 1991, a separate capital-related market basket was established. In its April 1, 1985 report to the Secretary, ProPAC suggested that the market basket should be rebased at least every 5 years, or more frequently if significant changes in the weights occur. When reviewing whether to rebase the market basket, we consider the following factors:

- Evidence of cost structure changes indicating that the existing weights are no longer appropriate.
- Evidence that the continued use of existing price proxies should be reconsidered.
- The availability of new data sources to use in the rebasing.

Our practice has been to update or rebase the market basket about every 5 years. Occasionally, we have adjusted this timing to coincide with the Department of Commerce, Bureau of Economic Analysis' schedule for updating the interindustry model of the United States (U.S.) economy, which is released every 5 to 7 years. The interindustry model includes detailed cost analyses of the entire U.S. economy including the hospital industry. In developing the current market basket, effective beginning October 1, 1990, we used 1987 hospital data from the American Hospital Association's (AHA's) 1988 Annual Survey for six major expense categories (wages and salaries, employee benefits, professional fees, depreciation, interest, and a residual ''all other'' category). We used AHA's Hospital Administrative Services (HAS) data from 1987 to derive the weights for professional liability insurance, food, and pharmaceutical products. Weights for most of the remaining subcategories were derived from Department of Commerce, Bureau of Economic Analysis data trended forward to 1987. For a detailed description of the rebased market basket effective October 1, 1990, see the September 1, 1990 final rule (55 FR 36043).

Although it has been 5 years since the most recent rebasing of the market basket, we are announcing our intention to schedule market basket rebasing for FY 1997. We believe that a 1-year delay in the usual schedule is advantageous for the following reasons. First, it provides an opportunity to review and incorporate two important new data sources that are not available at this time. The first of these, the FY 1992 and 1993 Medicare cost report data, contain more detailed data on labor-related and capital-related costs. We are planning on replacing the AHA Annual Survey data with Medicare cost report data for the main operating and capital cost weights. In the next several months, we are planning to compare and analyze the impact of this change to ensure the validity and consistency of the rebased market baskets for operating and capital costs. We believe that using the Medicare data would be an improvement since these data are reported directly to HCFA by Medicare participating hospitals, are readily available to us in a timely manner, and would free us from relying on data that is collected by outside organizations.

The second new data source we anticipate obtaining and analyzing is the 1992 Bureau of the Census' Assets and Expenditures Survey, which will be available later this year. The Census survey will provide much more detailed operating and capital cost data, and we anticipate that we will be able to use this survey to allocate the main cost category weights into more detailed subcategory weights for both operating and capital costs.

In addition to using the market basket to update the payment rates, we also use the percentages of the labor-related items (that is, wages and salaries, employee benefits, professional fees, business services, computer and data processing, blood services, postage, and all other labor-intensive services) to determine the labor-related portion of the standardized amounts. The labor-related portion of the standardized amounts is that portion that is subject to adjustment by the hospital wage index. In order to estimate if postponement of the market basket rebasing would adversely affect hospital payments due to a potential change in the labor-related portion of the payment amounts, we conducted an analysis using the 1987 index rebasing methodology (with 1992 equivalents of the data sources used in

1987). This analysis indicates only a minor difference in the cost shares for compensation costs, which are the major portion of labor-related costs. Therefore, we believe that delaying the market basket rebasing until FY 1997 will not disadvantage hospitals and will allow us to use more detailed and current data.

V. Changes and Clarifications to the Prospective Payment System for Capital-Related Costs

A. Update Framework for Prospective Payment System for Inpatient Hospital Capital-Related Costs and Possible Revisions to the Federal Rate (§ 412.308(c)(1)(ii))

1. Introduction

For FY 1992 through FY 1995, § 412.308(c)(1) provides that the update for the capital prospective payment rates (Federal rate and hospital-specific rate) will be based on a 2-year moving average of actual increases in Medicare inpatient capital costs per discharge. The regulations provide that, beginning in FY 1996, HCFA will determine the update in the capital prospective payment rates based on an analytical framework that will take into account (1) changes in the price of capital (which we will incorporate into a capital input price index), and (2) appropriate changes in capital requirements resulting from development of new technologies and other factors (such as existing hospital capacity and utilization). The objective of the capital update framework is to determine a rate of increase in aggregate capital prospective payments that, along with a rate of increase in DRG operating payments, ensures a flow of capital and operating services for efficient and effective care for Medicare patients.

We have presented a series of preliminary models, using available data and concepts, of an update framework for the prospective payment system for hospital inpatient capital-related costs in our FY 1992, FY 1993, FY 1994, and FY 1995 rulemaking documents. We received no public comments on our most recent version of the framework, which appeared in the September 1, 1994 final rule (59 FR 45517–45524). However, the Prospective Payment Assessment Commission (ProPAC) has presented its own update framework, along with a recommendation for the FY 1996 update to the capital rates, in its March 1, 1995 report to Congress. Below we present our formal proposal for an update framework, based on our previously published versions and our continued analysis of the data and concepts incorporated into the framework. We also respond to the recommendations of ProPAC.

The proposed update framework includes a capital input price index (CIPI) that parallels the operating input price index. The CIPI measures the pure price changes associated with changes in capital-related costs (prices ×''quantities''). The composition of capital-related costs is maintained at base-year FY 1987 proportions in the CIPI. As such, the composition of capital reflects the underlying capital acquisition process. We employ FY 1987 as the base year for this preliminary CIPI for consistency with the operating input price index. We will periodically update both the operating and the capital input price indexes to reflect the changing composition of inputs for capital and operating costs.

The proposed capital update framework, like the operating update framework, incorporates several policy adjustments in addition to the CIPI. We propose to adjust the CIPI rate of increase for case-mix index-related changes, for intensity, and for error in previous CIPI forecasts. We also discuss a possible adjustment for the efficient and cost-effective use of capital (such as movable equipment, buildings and fixed equipment) in the hospital industry.

In this proposed framework, we have attempted to maximize consistency with the current operating framework, in order to facilitate the eventual development of a single prospective payment system update framework. We have also attempted to promote the goals that motivated the adoption of the capital prospective payment system, especially the goals of promoting more effective and efficient utilization of capital resources in the hospital industry and establishing incentives for hospitals to make cost-effective decisions regarding acquisition of new capital resources.

We will consider comments and recommendations on any aspect of the proposed framework. We are interested in suggestions regarding the CIPI, the proposed policy adjustment factors, and alternative methodologies for deriving the factors. We are especially interested in comments on a possible efficiency adjustment. We welcome information concerning empirical studies and sources of data that could be useful in the framework. To assure consideration before publication of the final rule, comments should be sent by August 1, 1995, to the address listed at the beginning of this proposed rule.

2. ProPAC Recommendation for Updating the Capital Prospective Payment System Federal Rate

In its March 1, 1995 report to Congress, ProPAC recommends the use of an update framework that includes a capital market basket component (Recommendation 2). The ProPAC market basket measures 1-year changes in the purchase prices of a fixed basket of capital goods purchased by hospitals. The ProPAC framework also includes several policy adjustment factors. A forecast error correction factor adjusts payment rates so that the effects of past errors are not perpetuated. A financing policy adjustment accounts for the effects of substantial deviations from long-term trends in interest rates on hospital capital costs. The ProPAC capital update framework also includes adjustments for scientific and technological advances, productivity, and case-mix change similar to those employed in the ProPAC operating update framework. ProPAC also recommends the adoption of a single update framework for adjusting PPS operating and capital rates when the transition to full Federal rate capital payments is complete (Recommendation 3).

Our long-term goal is to develop a single prospective payment system update framework. Once we have completed work on an analytical framework for the capital prospective payment update in this year's final rule, we will begin to study development of a unified framework. In the meantime, we will continue to maintain as much consistency as possible with the current operating framework in order to facilitate the eventual development of a unified framework.

The ProPAC and HCFA update frameworks share certain goals. The goal of each framework is to provide a rate of increase in capital prospective payments that, along with the rate of increase in operating prospective payments, will ensure a flow of capital and operating resources that will allow for efficient and effective care for Medicare patients. Both frameworks are designed to provide increases for the purchase of quality-enhancing new technologies. Both frameworks provide for case-mix adjustments to remove the effects of upcoding and to adjust for changes in within-DRG severity. Both frameworks also seek to encourage efficient capital spending behavior. Although the frameworks adopt different methodologies for promoting some of these goals, they are compatible to the degree that they share these goals.

The major difference between the ProPAC and HCFA frameworks concerns the purpose and structure of the capital input price index, or market basket. ProPAC's framework is based on the premise that capital prospective payments are only for future capital purchases and should not reflect the vintage nature of capital. Thus, ProPAC's proposed capital market basket reflects the projected increase in the purchase price of capital goods from one year to the next. HCFA's framework is based on the premise that capital prospective payments are for hospitals' future capital-related expenses, which include the expenses related to future capital-related purchases. That is, HCFA's framework addresses the input price component of expenses associated with hospitals' given stock of capital in a particular fiscal year; ProPAC's framework ignores hospitals' present stock of capital and focuses on changes in input prices associated with capital purchases that hospitals will make in a particular fiscal year.

The HCFA CIPI projects the price changes associated with the accounting or vintage costs of capital assets. The HCFA CIPI is based on a definition of capital-related expenses and associated capital-related prices derived from accounting practice (including required HCFA PPS accounting practice) and consistent with economic theory. HCFA believes that the concept of capital-related prices incorporated into the HCFA CIPI is more appropriate than the concept incorporated into the ProPAC market basket because the consumption of capital is not just what is purchased in one year. The consumption of capital has a time-dimension: Capital is not used up immediately but rather over time. This feature of capital is reflected in the accounting definition of capital cost, and it should be reflected as well in the concept of capital prices in the CIPI. The transition from reasonable cost reimbursement to payment under a prospective system does not cancel the applicability of general accounting practice or the HCFA accounting practice derived from it. Thus the concepts of capital-related expenses and capital-related prices continue to be appropriate. Furthermore, the base capital rates were computed on the basis of accounting costs. HCFA believes that it is more consistent to update those rates on the basis of the changes in prices associated with those costs rather than on the basis of changes in current year purchase prices alone.

The HCFA CIPI captures the vintage feature of capital price by using a vintage average approach, that is, weighted averages of purchase prices and interest rates up to and including the current year. The use of vintage averages as the measure of price changes tracks the flow of consumption of capital. The vintage approach better reflects what hospital cash-flow needs are as new assets are brought on, since hospitals still bear the costs of older assets as the new assets are brought on.

HCFA believes that the CIPI appropriately reflects the prices associated with past and current period purchases of capital. Under the HCFA approach, the price change associated with the capital costs for any year is a weighted average of the prices associated with depreciation, interest and other capital costs for that year. The prices associated with the depreciation costs during the year are an average of the pro-rated purchase prices for the assets in use during that year (25 years buildings and fixed equipment, 10 years movable equipment, including current year purchases). The prices associated with the interest costs during the year are an average of the interest rates on debt instruments in effect during that year (22 years, including debt instruments that are new in the current year). Capital-related costs for insurance have an annual time dimension, and therefore the prices associated with those expenses are current year prices only.

In addition to the disagreement with ProPAC over whether the CIPI should reflect the vintage nature of capital, HCFA and ProPAC also disagree over the treatment of interest. ProPAC proposes to account for interest rate changes through a separate financing policy adjustment which would account for significant changes in long term interest rates. This adjustment would increase the update in case of significant long-term interest rate increases, and decrease the update in cases of significant interest rate decreases. (ProPAC has not identified the threshold that constitutes ''significant'' interest rate changes.)

HCFA believes that there must be an interest rate component in a capital input price index. Sound accounting practice includes interest, along with depreciation, as a component of capital cost. The interest and depreciation components of capital cost track the flow of consumption of capital inputs. Price is a component factor of cost (that is, cost is the product of price and quantity), and capital cost has both depreciation and interest components. There must therefore be an interest component of capital price just as there is an interest component of capital cost.

Furthermore, ProPAC's treatment of interest assumes that only current year interest rate changes need to be measured to capture the relevant price effects of interest rate changes. HCFA believes that the price aspects of interest costs, like the price aspects of depreciation costs, have a time dimension that must be captured in the CIPI. Whether the current year interest rate reflects a net lower price of financing to the hospital depends not on comparison of the current year's interest rate to the previous year's interest rate, but on the effect of the current year interest rate on all the hospital's debt instruments. For example, assume that the previous year's interest rate was 8 percent, and the current year's interest rate is 5 percent. However, as the hospital enters new financing arrangements at the current rate of 5 percent, it retires debt instruments from 20 years earlier that bore an interest rate of 3 percent. The price effect of the current year's interest rate is thus higher, not lower, as new debt instruments at 5 percent replace old debt instruments at 3 percent. HCFA believes it to be a great advantage of its CIPI that it directly tracks price effects such as these.

Finally, the pure price aspects of interest costs (that is, the interest rate and the purchase price that is represented in the amount of loan principal) are typically beyond the control of the hospital industry. To be sure, the actual decision to purchase capital assets or acquire debt is a ''quantity'' decision and typically is discretionary for a particular span of time. However, in measuring the actual expected price per unit of real capital, independently of any evaluation of the propriety of any actual purchase decisions, it is essential to recognize that the industry has some control over the amount of capital it purchases but little or no control over the price it pays for capital. Thus, the pure price aspect of interest cost changes must be incorporated into the CIPI. Otherwise, the CIPI will not accurately reflect the prices faced by hospitals who must borrow to finance necessary capital acquisitions. Limitations on the quantity of capital are appropriately implemented through policy adjustment factors. The ProPAC approach artificially eliminates pure price changes related to interest costs from the CIPI and incorporates them into a discretionary adjustment factor. The HCFA CIPI retains all price components of increases in interest costs as one measure of inflation in capital-related expenses. It thereby keeps price and quantity aspects distinct, allowing

separate analysis of each factor of increases in capital expenses.

We provide further comments on particular ProPAC recommendations in section V.A.3 of this preamble.

3. Measurement of Capital Input Price Increases

a. Introduction. HCFA discussed a capital input price index as one component in developing future update factors for the Federal rate in the September 1, 1992 **Federal Register** (57 FR 40016). We have presented revised versions of the capital input price index in the May 26, 1993 (58 FR 30448), September 1, 1993 (58 FR 46490), May 27, 1994 (59 FR 27876), and September 1, 1994 (59 FR 45517) issues of the **Federal Register**.

In this proposed rule, we are formally presenting a capital input price index for public comments prior to adoption of a final rule. The proposed CIPI parallels the operating input price index. Both the CIPI and the operating input price index are designed to measure input price changes for hospitals' current year expenses, that is, to separate pure price changes from quantity and expenditure changes. The operating sector input price index measures input price changes for operating-related expenses. The capital input price index measures input price changes for capital-related expenses, which include depreciation, interest, and other expenses (such as insurance related to capital goods.)

b. Proposed HCFA Capital Input Price Index Methodology. The proposed CIPI is based on the following assumptions:

- The Federal rate is based on the concept of capital-related expenses of capital assets used for patient care in the fiscal year and, therefore, any change in the Federal rate should take into account expected changes in the input price aspects of capital-related expenses;
- Capital-related expenses are defined as the sum of depreciation expense, capital-related interest costs, and other capital-related costs, including insurance and leases; and
- The input prices related to capital-related expenses are typically beyond the control of the hospital industry (that is, the hospital is a price-taker, not a price-setter).

These assumptions lead directly to a definition of a CIPI that takes into account the price aspects of changes in depreciation expense, interest costs, and other capital-related costs. Thus, the proposed CIPI includes three categories of capital-related expenses: Depreciation, interest, and other capital-related costs (such as insurance). Further, the assumptions lead directly to input prices for depreciation and interest costs that, unlike operating costs, have a time dimension that must be captured in the CIPI.

Current depreciation costs represent the summed depreciation charges for all purchases of capital assets that are still depreciable in the current period. The input prices associated with these depreciation expenses are the purchase prices attached to all past and current capital purchases for capital still depreciable in the current period. A weighted average of these purchase prices thus represents the input price associated with depreciation expenses in the current period. Thus, the depreciation input price for the current period measures price aspects of current depreciation expenses for capital just as the operating input price index for the current period measures price aspects of current operating expenses for labor and non-capital goods and services. The depreciation input price differs from the operating input price in that the depreciation input price is a vintage-weighted composite of all past capital purchase prices while the operating index input price measures purchase prices for current periods only.

Current interest expenses represent the total interest costs for all still-active past debt instruments associated with past and current purchases of all capital assets. The input prices associated with these interest expenses are the interest rates associated with all past debt instruments that are still active in the current period. A weighted average of these interest rates thus represents the input price associated with interest expenses in the current period. Thus, the interest input price for the current period measures price aspects of current interest expenses just as the operating input price index for the current period measures price aspects of current operating expenses for labor and non-capital goods and services. The interest input price appropriately differs from the operating input price in that the interest input price is a vintage-weighted composite of all interest rates for debt instruments that are still active in the current period, while the operating index input price measures purchase prices for current periods only.

Current year other capital-related expenses (for example, for insurance) have an annual time dimension and, therefore, prices associated with these expenses are, like operating input prices, current year prices only.

A commenter on a previous version of the CIPI recommended that proportional annual vintage weights (implicit in moving averages) for capital price proxies be replaced by non-proportional annual vintage weights that reflect the relative vintage purchases of capital. The commenter pointed out that annual purchases of real capital tend to increase over time. As annual purchases of real capital increase, the later years in the moving average of depreciation and interest costs should be weighted more heavily than the earlier years. We agree with this comment. Accordingly, a special data base was prepared to provide appropriate historical vintage weights for depreciation and interest input prices.

We have done preliminary research into the effects of changing the base year from FY 1987 to FY 1992 using capital-related data from the FY 1992 Medicare cost reports among other sources. The initial results have shown small differences between the FY 1987 and FY 1992 base year weights, resulting in a minimal effect on the CIPI. We will continue to analyze these data in preparation for a future change to a FY 1992 base year when more 1992 data become available.

The FY 1987 composite data base starts with financial variables from the American Hospital Association (AHA) Panel Survey. The variables are enhanced with data from the Medicare cost reports and from the Department of Commerce Capital Expenditure Survey. The composite data base provides annual estimates of nominal purchases for building and fixed equipment and for movable equipment. Leasing amounts were distributed among building and fixed equipment and movable equipment nominal purchases by first computing the percentage of total owner-operated nominal purchases attributable to each type of equipment, and then applying these percentages to total leasing amounts. Nominal purchases were then converted to annual real (that is, constant dollar) purchases by dividing nominal expenditures by an appropriate purchase price proxy.

Expected life for building and fixed equipment and for movable equipment were derived from Medicare cost reports by dividing the book value of assets by current year depreciation amounts. The relative distribution of real capital purchases within the respective life for building and fixed equipment (25 years) and for movable equipment (10 years) were derived from the special data base. These relative distributions are shown in Table 1. Relative distributions for a number of different time periods were averaged to obtain the distributions in Table 1. These distributions were all very similar regardless of the periods

chosen and, therefore, we selected an average of the distributions in order to simplify the calculations.

TABLE 1.—RELATIVE WEIGHTS FOR CAPITAL-RELATED PRICE PROXIES

Building and fixed equipment		Movable equipment		Interest	
Expected life	25 years	Expected life	10 years	Expected life	22 years
1	0.015	1	0.064	1	0.007
2	0.019	2	0.072	2	0.009
3	0.022	3	0.077	3	0.010
4	0.024	4	0.085	4	0.011
5	0.023	5	0.095	5	0.013
6	0.022	6	0.101	6	0.015
7	0.020	7	0.109	7	0.017
8	0.021	8	0.122	8	0.020
9	0.025	9	0.132	9	0.023
10	0.030	10	0.142	10	0.027
11	0.033	Total	1.000	11	0.032
12	0.034			12	0.038
13	0.034			13	0.043
14	0.035			14	0.050
15	0.038			15	0.057
16	0.043			16	0.064
17	0.049			17	0.074
18	0.053			18	0.083
19	0.056			19	0.090
20	0.057			20	0.098
21	0.060			21	0.105
22	0.066			22	0.114
23	0.071			Total	1.000
24	0.075				
25	0.077				
Total	1.000				

Source: Health Care Financing Administration, Office of the Actuary (Medicare Cost Reports, AHA Panel Survey, Securities Data Inc.)

Table 2 shows the historical, annual percentage changes in the capital-related price proxies employed in the CIPI prior to vintage-weighting. These proxies are: The institutional construction index maintained by Boeckh for the unit prices of fixed assets; the machinery and equipment component of the Producer Price Index (PPI–11) for movable equipment; the average yield on domestic municipal bonds from the Bond Buyer index of 20 bonds (Muni); the average yield on Moody's corporate bonds (AAA); a composite of Muni and AAA indexes (Combined Muni/AAA); and the residential rent component of the Consumer Price Index (CPI Rent) for other capital costs.

We previously used the Engineering News-Record (ENR) building cost index as a price proxy for the unit price of fixed assets. However, we believe that the Boeckh institutional construction index is more applicable to the industry. The variation between the two indexes is minimal.

We applied the relative vintage depreciation weights from Table 1 to the appropriate non-vintage weighted historical, annual index levels (base year FY 1987) of depreciation price proxies to generate the current year, vintage-weighted component index levels for the CIPI depreciation sector. The annual percentage change between the non-vintage weighted historical, annual depreciation index levels are listed in Table 2. The annual percentage change between the annual, vintage-weighted depreciation component index levels (base year FY 1987) are listed in Table 3. For example, the FY 1996 movable equipment index component percentage change of 1.8 percent in Table 3 was computed as the percentage change between the FY 1995 and FY 1996 vintage-weighted movable equipment component index levels. The 1996 movable equipment component index (base year FY 1987) represents the weighted-average of the index levels in the movable equipment price proxy (PPI–11 in Table 2) for the previous 10 years (that is, FY 1987 through 1996), weighted by the relative vintage weights listed for movable equipment in Table 1. These calculations are slightly different than prior versions of the CIPI in the **Federal Register**, and reflect a more refined weighting methodology.

TABLE 2.—ANNUAL PERCENT CHANGES FOR NON-VINTAGE WEIGHTED CAPITAL INPUT PRICE PROXIES, FISCAL YEARS 1949 TO 2000

Fiscal year	BOECKH	PPI–11	Muni	AAA	Combined muni/AAA	CPI rent
1949	3.3	7.4	−4.4	−3.1	−4.2	4.4
1950	1.4	0.5	−9.4	−4.2	−8.4	3.9
1951	8.6	13.6	−5.8	7.1	−3.4	3.7
1952	3.7	1.6	12.9	5.7	11.4	4.2
1953	3.5	0.8	25.9	7.3	22.2	4.7
1954	1.5	2.7	−8.2	−6.3	−7.9	4.8

TABLE 2.—ANNUAL PERCENT CHANGES FOR NON-VINTAGE WEIGHTED CAPITAL INPUT PRICE PROXIES, FISCAL YEARS 1949 TO 2000—Continued

Fiscal year	BOECKH	PPI–11	Muni	AAA	Combined muni/AAA	CPI rent
1955	1.8	1.9	−0.4	1.1	−0.1	1.4
1956	4.8	7.5	7.8	7.6	7.8	1.7
1957	3.6	8.0	24.0	18.0	23.0	1.9
1958	1.8	3.2	−3.7	−1.1	−3.3	1.9
1959	3.1	1.6	11.5	13.3	11.8	1.3
1960	2.7	1.5	1.7	4.9	2.3	1.6
1961	1.1	−0.3	−3.1	−3.2	−3.2	1.3
1962	2.2	0.0	−6.4	0.8	−5.1	1.3
1963	2.3	0.0	−3.4	−2.8	−3.3	1.0
1964	2.8	0.9	3.2	3.3	3.2	1.0
1965	3.1	0.6	−0.5	1.6	−0.1	1.0
1966	3.8	2.7	16.5	11.0	15.4	1.2
1967	5.3	3.8	2.4	8.3	3.5	1.7
1968	7.3	2.8	14.7	14.5	14.6	2.4
1969	8.4	3.3	21.5	9.8	19.2	2.8
1970	7.0	4.2	22.2	18.0	21.4	4.1
1971	8.7	4.2	−13.9	−4.9	−12.3	4.7
1972	8.0	2.2	−5.8	−3.8	−5.4	3.6
1973	6.0	2.6	−1.8	0.8	−1.3	4.0
1974	8.0	9.9	12.6	12.5	12.6	4.9
1975	11.1	19.5	19.2	7.9	16.9	5.2
1976	7.6	6.7	−1.2	−3.2	−1.5	5.3
1977	8.5	6.0	−15.8	−6.4	−14.1	5.8
1978	6.6	7.6	1.1	5.6	2.0	6.7
1979	7.5	8.7	7.3	8.9	7.6	7.1
1980	8.6	11.5	26.9	22.9	26.1	8.6
1981	9.8	10.6	32.9	20.7	30.5	8.8
1982	9.6	7.1	16.2	5.5	14.2	8.0
1983	7.0	3.2	−22.5	−17.7	−21.7	6.3
1984	5.2	2.3	4.8	6.9	5.1	5.0
1985	2.0	2.2	−5.3	−7.1	−5.6	5.9
1986	1.6	1.5	−18.1	−19.6	−18.4	6.2
1987	2.1	1.5	−5.5	−5.3	−5.5	4.5
1988	2.3	2.2	7.1	9.9	7.6	3.8
1989	3.6	3.5	−6.7	−4.8	−6.3	3.8
1990	2.5	3.1	−1.2	−2.0	−1.3	4.2
1991	2.7	2.2	−2.7	−2.6	−2.7	3.9
1992	3.1	0.5	−7.4	−8.2	−7.5	2.6
1993	2.4	0.4	−10.6	−8.9	−10.3	2.4
1994	2.8	0.8	0.0	0.2	0.0	2.3
1995	3.2	1.5	17.9	12.7	17.0	3.2
1996	3.0	3.2	−5.4	−3.0	−5.0	4.1
1997	3.1	2.6	−2.2	−1.8	−2.1	2.2
1998	3.4	2.5	2.5	1.6	2.3	3.1
1999	3.1	2.6	0.9	0.9	0.9	2.9
2000	3.1	2.6	−0.8	0.5	−0.5	2.9

Proxy Name:
BOECKH—Institutional construction.
PPI–11–Machinery and equipment.
Muni—Average yield on domestic municipal bonds—bond buyer (20 bonds).
AAA—Average yield on moody's AAA corporate bonds.
CPI RENT (all urban)—residential rent.
Source: DRI/McGraw-Hill HCC, 1st Qtr 1995; @USSIM/Trend25YR95; @CISSIM/CONTROL951.
Released By: HCFA, OACT, Office of National Health Statistics.

TABLE 3.—HCFA CAPITAL INPUT PRICE INDEX PERCENT CHANGES, TOTAL AND COMPONENTS, FISCAL YEARS 1979 TO 2000

Fiscal year	Total	Depreciation			Interest	Other
		Total	Building and fixed equipment	Movable equipment		
Weights (FY1987)	1.0000	0.6510	0.3054	0.3456	0.3274	0.0216

TABLE 3.—HCFA CAPITAL INPUT PRICE INDEX PERCENT CHANGES, TOTAL AND COMPONENTS, FISCAL YEARS 1979 TO 2000

Fiscal year	Total	Depreciation			Interest	Other
		Total	Building and fixed equipment	Movable equipment		
Price Changes						
1979	5.6	7.4	6.9	7.7	2.6	7.1
1980	7.1	7.9	7.2	8.6	5.6	8.6
1981	8.8	8.4	7.6	9.1	9.5	8.8
1982	9.3	8.5	7.9	9.0	10.7	8.0
1983	6.7	8.0	7.8	8.1	4.7	6.3
1984	6.3	7.2	7.5	7.0	4.8	5.0
1985	5.1	6.2	6.7	5.7	3.3	5.9
1986	3.7	5.5	6.1	5.0	0.3	6.2
1987	3.1	4.9	5.6	4.3	−0.5	4.5
1988	3.0	4.5	5.3	3.9	0.1	3.8
1989	2.7	4.3	5.1	3.6	−0.7	3.8
1990	2.4	4.0	4.8	3.2	−1.0	4.2
1991	2.1	3.6	4.5	2.7	−1.3	3.9
1992	1.7	3.2	4.3	2.1	−2.1	2.6
1993	1.3	2.9	4.1	1.8	−2.9	2.4
1994	1.3	2.8	4.0	1.6	−2.7	2.3
1995	1.8	2.7	3.9	1.6	−1.0	3.2
1996	1.8	2.8	3.8	1.8	−1.5	4.1
1997	1.8	2.9	3.7	2.0	−1.6	2.2
1998	1.9	2.9	3.6	2.0	−1.1	3.1
1999	2.0	2.8	3.5	2.0	−0.8	2.9
2000	2.0	2.8	3.5	2.1	−0.7	2.9

Source: DRI/McGraw-Hill HCC, 1st Qtr 1995; @USSIM/Trend25YR95; @CISSIM/CONTROL951.
Released By: HCFA, OACT, Office of National Health Statistics.

As we have discussed in connection with previous versions of the CIPI, stability is an important criterion for evaluating such an index. Stability is an inherent characteristic of capital because of its vintage nature; since capital assets are consumed over time, they are replaced at a relatively slow rate. An input price index for capital should reflect the relative stability of capital assets themselves. Furthermore, excessive volatility in a price index deprives the index of predictability, thus inhibiting the ability of institutions to plan for changes in capital payments resulting from changes in the CIPI. We graphically demonstrated (using the projections available at that time) the stability of the annual HCFA vintage-weighted CIPI compared to annual changes in non-vintage weighted capital purchase prices in Figures 1 and 2 in our discussion of May 27, 1994 (59 FR 27882).

ProPAC recommends a capital input price index based on annual changes in current capital purchase prices excluding consideration of weighted historical capital purchase prices (that is, not vintage weighted). We previously argued that the ProPAC index was not consistent with the operating input price index that is currently used to assist updating DRG payment rates. We would add that the greater volatility in annual purchase prices would introduce an unacceptable degree of volatility in prospective capital payments and does not reflect the inherent stability that comes from the vintage nature of capital.

Another commenter on a previous version of the CIPI recommended that data from Securities Data Corporation be incorporated into the CIPI interest computations. This source provides information on hospital issuances of municipal and commercial bonds. From this data base, we incorporated information showing that the average expected life of hospital bond debt instruments (that is, the time interval between the issue date and the maturation date) was about 13 years for municipal serial bonds and about 25 years for municipal term bonds. The weighted average life for the 2 types of bonds was 22 years.

The relative nominal capital purchases within various 22-year periods provided appropriate vintage weights for annual changes in interest rates. Not all capital purchases are funded by debt. Medicare cost reports suggest that about 80 percent of new capital acquisitions are financed by debt and about 20 percent by equity financing. However, if the proportion of total purchases financed by debt does not change substantially from year to year, then it is irrelevant whether we use the full amount or a constant proportion of the full amount of nominal capital acquisitions as weights for relative amounts of the debt instruments still active in the current period.

A third commenter on a previous version of the CIPI recommended that we investigate the effects on interest rate changes of changing structures of hospital bond ratings. If bond ratings are deteriorating, hospitals incur higher interest rate charges; if bond ratings improve, hospitals incur lower interest rates. Our CIPI currently recognizes only changes in pure interest rates and does not recognize changes in effective interest rates due to changes in bond ratings.

We examined a hospital-municipal-bond data base from Securities Data Corporation, to examine that issue. The data showed that serial bonds continue to dominate short-term financing and that term bonds dominate long-term financing. We classified all bond amounts by ratings found in the data base for years 1980 to 1993. The

distribution of those issues described with a Moody's Quality Rating, shown in Table 4 (portions are applied to dollar amount of debt issued), indicates a trend toward higher quality issues since 1984. Although the annual, aggregate issue amounts in Moody's quality range Aaa through A have remained approximately constant since 1980, issue amounts in the highest quality band have become substantially higher since inception of the prospective payment system. Both issue amounts in the Aaa-Aa3 ranges and those in the Aaa-A range are greater in 1993 than at any time since 1980. We conclude there is no evidence to justify a component for deteriorating bond ratings in the CIPI.

TABLE 4.—PERCENT DISTRIBUTION OF HOSPITAL MUNICIPAL BOND AMOUNTS BY MOODY'S QUALITY RATING*

	Pre-PPS	Post-PPS	
	1980–1983 (percent)	1984–1988 (percent)	1989–1993 (percent)
Aaa-Aa3	7.1	36.8	49.0
Aa-A	50.6	24.1	21.7
Baa1-Ba	9.6	3.6	8.0
Not Rated	31.0	32.7	17.9

* Distributions do not sum to 100 percent due to a residual category of missing data.
Notes:
[1] Aggregate issues from Aaa-A have remained fairly constant since 1980.
[2] Issue amounts in the highest quality band have become substantially higher since inception of PPS.
[3] Both issue amounts in the Aaa-Aa3 ranges and those in the Aa-A ranges are greater in 1993 than at any time since 1980.

Relative vintage interest weights derived from our procedure are shown in Table 1. When combined with index levels (base year FY 1987) of annual, non-vintage weighted interest rate proxies, the relative interest weights provide current year, vintage-weighted component index levels for interest rates in the CIPI. The annual percentage change between the non-vintage weighted historical, annual interest index levels are listed in Table 2. The annual percentage change between the annual, vintage-weighted interest component index levels (base year FY 1987) are listed in Table 3. Thus, for example, the interest rate component change of -1.5 percent in Table 3 for FY 1996 represents the annual percentage change between the 1995 and 1996 vintage-weighted interest component index levels. The 1996 interest component index level (base year FY 1987) is computed as the vintage-weighted average of the previous 22 years in the interest rate proxy index level (Combined Muni/AAA) in Table 2, weighted by the interest weights listed in Table 1. We use an index level for a combined municipal and AAA commercial bond interest rate (percent changes shown in Table 2 as Combined Muni/AAA), giving the municipal rate an 85 percent weight and the AAA rate a 15 percent weight, reflecting the relative hospital debts of the government/non-profit hospital sector and the for-profit sector.

Although Medicare cost reports show that only 60 percent of current hospital debt is in the form of notes or bonds (about 40 percent is in the form of mortgages), we assumed that the relative annual weights for all debt and the relative annual changes in interest rates for all debt were the same as bond-related weights and price changes. We are still searching for an appropriate source of information on hospital commercial mortgage data. We do not expect that the discovery of such data will materially alter our current conclusions about trends in effective interest rates over time.

c. Projection of the CIPI for Fiscal Year 1996. DRI projects a 1.8 percent increase in the CIPI for FY 1996 (Table 3). This is the outcome of a 2.8 percent increase in projected weighted depreciation prices in FY 1996, partially offset by a 1.5 percent decline in vintage-weighted interest rates in FY 1996.

d. ProPAC Input Price Index. i. Introduction. Three major differences distinguish ProPAC's CIPI from HCFA's CIPI:

- The ProPAC CIPI measures changes in capital asset purchase prices in the year the asset is purchased (that is, not vintage weighted). HCFA's CIPI is designed to measure changes in a vintage-weighted composite of capital asset purchase prices.
- The ProPAC CIPI uses the Marshall and Swift hospital equipment index as the movable equipment purchase price proxy while HCFA uses the Producer Price Index for machinery and equipment.
- The ProPAC CIPI has no interest component. ProPAC treats interest rate changes as an optional separate update policy adjustment factor.

Through 1996, for example, ProPAC expects that long term interest rates will remain relatively stable and, therefore, believes that it is not appropriate to adjust capital input prices for forecasted changes in interest rates in the target year.

HCFA incorporates a vintage-weighted composite of interest rates in its CIPI for the target year.

ii. Depreciation. ProPAC states that its CIPI is analogous to the prospective payment operating price index. We disagree. The components of the operating index represent price changes in ongoing hospital expenses for labor and non-capital goods and services. The analogous capital expenses in this context are current depreciation costs, interest costs, and other capital-related expenses (such as insurance). Current depreciation and interest costs, according to HCFA, IRS, and accounting principles, are a cumulative composite of segments of expenses incurred in current and prior periods. Current interest costs are a cumulative composite of segments of past and current year debt costs. Since both depreciation and interest costs have a vintage component, the price aspect of these costs must have a vintage component as well. The HCFA CIPI attempts to capture these vintage components.

Differences between HCFA and ProPAC with respect to choices for annual non-vintage weighted rates of change in alternative price proxies for movable equipment are small for much of the historical period. (We illustrated this fact in Figure 8 (Inset) in the May 27, 1994 proposed rule (59 FR 27890), using earlier projections.) As noted in our September 1, 1992 final rule, one basic criterion for accepting price proxies is public availability of documentation on data sources and methodology (57 FR 40018–40019).

Despite repeated efforts, neither we nor Data Resources Inc. have been able to obtain documentation on the movable price proxy recommended by ProPAC (Marshall and Swift hospital equipment index) that explains how it is derived and what sampling frame and sampling error attach to the estimates. In the absence of such information we cannot adopt the ProPAC alternative.

HCFA's assumption is that prices for movable equipment purchased by hospitals change at about the same rate as general prices for all machinery and equipment. This assumption is justified in part by the fact that not all movable equipment purchased by hospitals is medical equipment; it stands to reason that the prices for non-medical movable equipment purchased by hospitals, such as automobiles, desks, chairs, etc., would change at about the same rate as prices for all machinery and equipment. To examine this assumption further, we measured the rate of change in the HCFA movable price proxy relative to prices for medical equipment only by preparing a composite index of medical prices from the Bureau of Labor Statistics Producer Price Index (PPI) for two commodity categories—medical instruments/equipment and X-ray/electro-medical equipment. The two PPI commodity indexes were then merged using their respective PPI weights. Price changes for this index are not available for years prior to 1984. Annual price changes for medical equipment follow the annual HCFA price proxy more closely than the ProPAC price proxy for most of the historical period. We will continue to monitor trends in these indexes to ensure that appropriate price proxies are incorporated in the CIPI.

iii. Interest. ProPAC has proposed to project annual interest rates to future periods and then to decide whether to allow an add-on to the Federal capital rate depending on the magnitude of the projection. ProPAC has presented no objective criteria for determining when an interest adjustment is appropriate. We previously noted that a single-year projection for interest rates is conceptually inappropriate since interest costs must be vintage-weighted. In addition to this conceptual problem, the ProPAC approach is impractical because future annual interest rates are volatile, vulnerable to unpredictable market forces, and subject to exogenous influences (such as Federal Reserve Board decisions) that are difficult to anticipate. Thus, any projection of future annual interest rates is likely to be inaccurate, resulting in underpayment or overpayment of the Federal capital rate relative to the capital-related expenses that the rate is supposed to compensate. The resulting uncertainty in payments under future Federal capital rates further complicates future capital expenditure decisions by hospitals. On the other hand, the projected HCFA CIPI interest component for the target year is the weighted average change over 22 years of interest rate history, of which 20 years experience in the non-vintage weighted price proxy is appropriately historical. The projected annual, non-vintage weighted experience in the price proxy for the most recent 2 years may be as inaccurate as any ProPAC projection, but any error will have minimal effects on Federal rates due to the appropriately weighted effect of the historical data in the HCFA CIPI. This stability in the interest rate component of the HCFA CIPI provides hospital planners with a degree of certainty about future Federal rate payments, other things remaining equal.

iv. The Composite HCFA CIPI. Annual percentage changes in the historical and projected HCFA and ProPAC CIPI's differ markedly as shown in Table 5. The 3.1 percent increase for the ProPAC capital market basket in Table 5 for FY 1996 is lower than the 4.1 percent increase presented in ProPAC's March 1995 Report and Recommendation to the Congress. In the ProPAC March report, ProPAC used the 4th quarter 1994 DRI forecasts, while the figure in this proposed rule represents 1st quarter 1995 DRI forecasts. Between 4th quarter 1994 and 1st quarter 1995, DRI revised its forecast by 1.0 percent to reflect slower price growth in 1996 than originally expected. A lower forecast for the movable equipment price proxy (Marshall and Swift) was responsible for two-thirds of the 1.0 percent decline between forecasts. The remaining one-third of the decline was the result of lower forecasts in the fixed equipment price proxy (Boeckh) and the other capital-related expenses price proxy (CPI-residential rent), with each being equally responsible. We emphasize that the later forecast was not available when ProPAC released its March report.

The ProPAC CIPI is much more volatile than the HCFA CIPI in the historical period through 1994 because it does not reflect vintage-weighted capital input price factors for depreciation. Further, the ProPAC CIPI omits conceptually relevant interest rates. The cumulative effect of declining interest rates for all debt instruments in recent years has driven the rate of change in the HCFA vintage-weighted interest rate component downward, a trend projected by DRI into future rate years. The declining interest rate component appropriately brings the HCFA CIPI below the ProPAC CIPI in the projection period. Other things being equal, the ProPAC index would result in overpayment through the Federal rate because anticipated actual capital-related expenses will be less than ProPAC projects due to the effects of lower interest rates on capital-related expenses.

TABLE 5.—ANNUAL PERCENT CHANGES IN HCFA CAPITAL INPUT PRICE INDEX AND THE PROPAC CAPITAL MARKET BASKET, 1979 TO 2000

Fiscal year	HCFA capital input price index	ProPAC capital market basket
1979	5.6	8.3
1980	7.1	9.2
1981	8.8	10.0
1982	9.3	7.7
1983	6.7	4.6
1984	6.3	3.9
1985	5.1	2.2
1986	3.7	1.7
1987	3.1	2.1
1988	3.0	3.5
1989	2.7	4.6
1990	2.4	2.3
1991	2.1	3.0
1992	1.7	2.2
1993	1.3	2.1
1994	1.3	2.8
1995	1.8	3.5
1996	1.8	3.1
1997	1.8	3.3
1998	1.9	3.3
1999	2.0	3.2
2000	2.0	3.3

Source: DRI/McGraw-Hill HCC, 1st Qtr 1995; @USSIM/Trend25YR95; @CISSIM/CONTROL951.

Released by: HCFA, OACT, Office of National Health Statistics.

ProPAC believes that Medicare program payments should reflect both savings from low interest rate levels on new debt instruments and the additional costs of high interest rate levels. As explained above, the Commission has proposed accomplishing this through an interest policy adjustment. However, ProPac has neither presented a threshold level for making an interest adjustment nor established a process for determining the amount of the adjustment. The HCFA CIPI, on the other hand, automatically registers the price effects of interest rate changes on new debt instruments that carry over into future periods, although those effects are appropriately registered only very gradually.

When interest rate levels decline, hospitals may refinance their existing debt. Refinancing has a price effect as new debt instruments with lower prices (interest rate levels) replace older debt instruments with higher prices (interest rate levels). ProPAC believes its interest policy adjustment can and should capture this behavior. In this way, Medicare can share in the savings from refinancing. The HCFA CIPI does not now automatically register the price effects of refinancing. Whether to do so or not is a policy judgment concerning whether HCFA should share in refinancing savings or allow hospitals to realize the full effects of refinancing. A refinancing adjustment would not only reflect actual hospital behavior, but would also add to the existing incentives of a rate-based system for hospitals to replace high interest debt instruments with lower interest debt instruments. However, the absence of a refinancing adjustment could allow individual hospitals to refinance and keep the savings, just as individual hospitals who become relatively more efficient in furnishing care for specific DRGs are rewarded for the more efficient behavior.

We invite comment on whether to incorporate a refinancing adjustment within the HCFA framework. A refinancing adjustment would present specific problems because HCFA has not been able to obtain data to accurately determine refinancing amounts. Whether HCFA can ultimately propose a refinancing adjustment depends upon whether the necessary data can be obtained.

Since refinancing is a price matter, the adjustment would appropriately be on the price side of the framework, rather than on the policy adjustment side, which deals with quantities. However, the adjustment would not be included directly within the CIPI because the price effect of refinancing involves a shift in the vintage weights applied to index levels. That is, interest expense associated with prices (interest rate levels) in the year the debt is originated would be shifted to reflect interest expense associated with prices in the year the debt is refinanced. This essentially would reduce the relative vintage weights for interest in the CIPI (Table 1) in some years and increase the relative vintage weights for interest in other years. Yet by definition, the fixed-weight CIPI holds all weights constant. However, a discretionary adjustment could be made on the relative vintage weights. This is analogous to the separate adjustments for real case-mix changes in the update framework.

At this time we are continuing to analyze the merits and technical difficulties of including a refinancing adjustment in the HCFA update framework. We encourage comments and suggestions on a refinancing adjustment, as well as any studies or data sources that would be useful in assessing and implementing this potential adjustment.

4. Case-Mix Adjustment and Adjustment for Forecast Error

The case-mix index (CMI) is the measure of the average DRG weight for cases paid under the prospective payment system. Because the DRG weight determines the prospective payment for each case, any percentage increase in the CMI corresponds to an equal percentage increase in hospital payments.

The CMI can change for any of several reasons: Because the average resource use of Medicare patients changes (''real'' case-mix change); because changes in hospital coding of patient records result in higher weight DRG assignments (''coding effects''); and because the annual DRG reclassification and recalibration changes may not be budget neutral (''reclassification effect''). We define real case-mix change as actual changes in the mix (and resource requirements) of Medicare patients as opposed to changes in coding behavior that result in assignment of cases to higher-weighted DRGs but do not reflect higher resource requirements. In the update framework for the prospective payment system for operating costs, we adjust the update upwards to allow for real case-mix change, but remove the effects of coding changes on the CMI. We also remove the effect on total payments of prior changes to the DRG classifications and relative weights, in order to retain budget neutrality for all CMI-related changes other than patient severity. (For example, we adjusted for the effects of the FY 1992 DRG reclassification and recalibration as part of our FY 1994 update recommendation.) The operating adjustment consists of a reduction for total observed case-mix change, an increase for the portion of case-mix change that we determine is due to real case-mix change rather than coding modifications, and an adjustment for the effect of prior DRG reclassification and recalibration changes. We propose to adopt this CMI adjustment as well in the capital update framework.

For FY 1996, we are projecting a 0.8 percent increase in the case-mix index. We estimate that real case mix increase will equal projected case-mix increase in FY 1996. We do not anticipate any changes in coding behavior in our projected case-mix change. The proposed net adjustment for case-mix change in FY 1996 is therefore 0.0 percentage points.

The −1.0 percent figure used in the ProPAC framework represents ProPAC's projection for observed case-mix change. ProPAC projects a 0.8 percent increase in real case-mix change across DRG's and a 0.2 percent increase in within-DRG complexity. ProPAC's net adjustment for case mix is therefore zero.

We estimate that DRG reclassification and recalibration resulted in a 0.3 percent increase in the case mix when compared with the case-mix index that would have resulted if we had not made the reclassification and recalibration changes to the DRGs. ProPAC does not make an adjustment for DRG reclassification and recalibration in its update recommendation.

The current operating update framework contains an adjustment for forecast error. The input price index forecast is based on historical trends and relationships ascertainable at the time the update factor is established for the following year. In any given year there can be unanticipated price fluctuations that can result in differences between the actual increase in prices faced by hospitals and the forecast used in calculating the update factors. We continue to believe that the capital update framework should include a forecast error adjustment factor. In setting a prospective payment rate under the proposed framework, we would make an adjustment for forecast error only if our estimate of the capital input price index rate of increase for any year is off by 0.25 percentage points or more. There is a 2-year lag between the forecast and the measurement of the forecast error. Thus, for example, we would adjust for a forecast error made in FY 1996 through an adjustment to the FY 1998 update.

5. Policy Adjustment Factors

The capital input price index measures the pure price changes associated with changes in capital-related costs (prices × ''quantities''). The composition of capital-related costs is maintained at base-year 1987 proportions in the capital input price index. We would address appropriate changes in the amount and composition of capital stock through the policy adjustment factors.

The current update framework for the prospective payment system for operating costs includes factors designed to adjust the input price index rate of increase for policy considerations. Under the revised

operating framework, we adjust for service productivity (the efficiency with which providers produce individual services such as laboratory tests and diagnostic procedures) and intensity (the amount of services used to produce a discharge). The service productivity factor for the operating update framework reflects a forward-looking adjustment for the changes that hospitals can be expected to make in service-level productivity during the year. A hospital retains any productivity increases above the average.

The intensity factor for the operating update framework reflects how hospital services are utilized to produce the final product, that is, the discharge. This component accounts for changes in the use of quality-enhancing services, changes in within-DRG severity, and expected modification of practice patterns to remove cost-ineffective services. We are proposing that the intensity adjustment factor in the operating framework be adopted in the capital update framework. Under the operating update framework, we calculate case-mix constant intensity as the change in total charges per admission, adjusted for price level changes (the CPI hospital component) and changes in real case mix. The use of total charges in the calculation of the proposed intensity factor makes it a total intensity factor, that is, charges for capital services are already built into the calculation of the factor. We can therefore incorporate the proposed intensity adjustment from the operating update framework into the capital update framework. In the absence of reliable estimates of the proportions of the overall annual intensity increases that are due, respectively, to ineffective practice patterns and to the combination of quality-enhancing new technologies and within-DRG complexity, we would assume, as in the revised operating update framework, that one-half of the annual increase is due to each of these factors. The capital update framework would thus provide an add-on to the input price index rate of increase of one-half of the estimated annual increase in intensity to allow for within-DRG severity increases and the adoption of quality-enhancing technology.

For FY 1996, we have developed a Medicare-specific intensity measure based on a five-year average using FYs 1990–1994. In determining case-mix constant intensity, we found that observed case-mix increase was 2.2 percent in FY 1990, 2.8 percent in FY 1991, 1.8 percent in FY 1992, 0.9 percent in FY 1993, and 0.8 percent in FY 1994. For FY 1990 through FY 1992, we estimate that 1.0 to 1.4 percent of the case-mix increase was real. (This estimate is supported by past studies of case-mix change by the RAND Corporation. The most recent study was ''Has DRG Creep Crept Up? Decomposing the Case-Mix Index Change Between 1987 and 1988'' by G.M. Carter, J.P. Newhouse, and D.A. Relles, R–4098–HCFA/ProPAC (1991). The study suggested that real case-mix change was not dependent on total change, but was rather a fairly steady 1.0 to 1.5 percent per year. We use 1.4 percent as the upper bound because the RAND study did not take into account that hospitals may have induced doctors to document medical records more completely in order to improve payment.) We assumed that all of the observed case-mix increase of 0.9 percent for FY 1993 and 0.8 percent for FY 1994 was real. (This assumption is consistent with the FY 1996 CMI projections described above.) If we assume that real case-mix increase was 1.0 percent per year during FY 1990 through FY 1992 (but 0.9 percent in FY 1993 and 0.8 percent in FY 1994), case-mix constant intensity declined by an average 1.2 percent during FY 1990 through FY 1994, for a cumulative decrease of 6.1 percent. If we assume that real case-mix increase was 1.4 percent per year during FY 1990 through FY 1992 (but 0.9 percent in FY 1993 and 0.8 percent in FY 1994), case-mix constant intensity declined by an average 1.5 percent during FY 1990 through FY 1994, for a cumulative decrease of 7.2 percent. Since we estimate that intensity has declined during the FY 1990–1994 period, we are recommending a 0.0 percent intensity adjustment for FY 1996.

In our previous discussions of a possible efficiency adjustment, we suggested that such an adjustment should take into account two considerations. One is that capital inputs, unlike operating inputs, are generally fixed in the short run. The productivity target in the revised operating framework operates on a short-term, year-to-year basis. Targets for capital efficiency and cost effectiveness, however, must operate on a longer term basis. The other consideration is that, prior to the adoption of the capital prospective payment system, Medicare payment policy for capital-related costs, as well as the policies of other payers, did not provide sufficient incentives for efficient and cost-effective capital spending. As a result, capital costs per case, and therefore base year prospective capital rates, may be higher than would have been consistent with capital acquisition policy in more efficiency-oriented markets. A guiding principle in devising an efficiency adjustment is therefore that Medicare capital prospective payment rates should not provide for maintenance of capital in excess of the level that would be produced in an efficiency-oriented competitive market.

To examine this issue, we analyzed the change in actual Medicare capital cost per case for FY 1986 through FY 1992 in relation to the change in the capital input price index (which accounts for change in the input prices for capital-related costs), and the other adjustment factors that we were then proposing to include in the framework. (The other adjustment factors are the increase in real case mix and the increase in intensity due to quality-enhancing technological change and within-DRG complexity.) We found rates of increase in actual spending per case that exceeded the rate of increase attributable to inflation in capital input prices, quality-enhancing intensity increases, and real case-mix growth.

Economic theory suggests that an industry with a guaranteed return on capital (such as the hospital industry prior to prospective payment for capital-related costs) would have a tendency to be overly capitalized relative to more competitive industries. This is because the incentive for firms in such an industry is to compete on the basis of more capital-intensive production processes than firms in other industries. As a result, capital costs per case, and therefore base year prospective capital rates, may be higher than would have been consistent with capital acquisition policy in more efficiency-oriented competitive markets.

Our analysis was designed to examine whether hospitals had in fact responded to the incentives of the cost-based payment system for capital by expanding beyond what was necessary for efficient and cost-effective delivery of services. The analysis confirmed that volume and intensity of capital acquisition far outpaced the increase in capital input prices during the years between the implementation of the prospective payment system for operating costs and the introduction of the capital prospective payment system. Even accounting for real CMI increases and increases in intensity attributable to cost-increasing but quality-enhancing new technologies, there remains a large excess of capital-related spending.

The following table shows the results of our most recent analysis, based on the most current data available and the most recent projections. Differences between this table and the tables in previous

discussions in the **Federal Register** reflect updated figures for average capital cost per case increases, based on the most recent data and projections, and our revised CIPI. This analysis encompasses all but 1 year of the period from the implementation of the prospective payment system for operating costs to the implementation of the prospective payment system for capital costs. (For FY 1984, sufficient data is not available to compute capital cost per case increases and intensity increases.) The results of the analysis in Table 6 are substantially similar to the results of previous analyses. In Table 6, real case-mix increase is assumed to be 1.0 percent annually.

TABLE 6.—CUMULATIVE PERCENTAGE CHANGE IN CAPITAL-RELATED COST PER CASE DUE TO INFLATION, REAL CMI, AND INTENSITY, 1985–1992

Year	CIPI [1]	Real CMI [2]	Allowable intensity [3]	Resulting increase [4]	% Change cost/case [5]	Residual [6]
1985	5.1	1.0	3.7	10.1	12.5	2.2
1986	3.7	1.0	2.1	6.9	19.9	12.2
1987	3.1	1.0	2.5	6.7	14.9	7.6
1988	3.0	1.0	1.5	5.5	7.1	1.5
1989	2.7	1.0	0.5	4.3	7.9	3.5
1990	2.4	1.0	0.2	3.6	6.7	2.9
1991	2.1	1.0	0.1	3.2	5.7	2.4
1992	1.7	1.0	0.1	2.8	4.1	1.2
Cumulative (compounded)				52.0	110.1	38.3

[1] Figures from Table 1, section V.A.3 of this preamble.
[2] Assuming that real CMI increase is 1.0 percent annually.
[3] One half of observed intensity increase, as determined by the joint operating/capital intensity measure.
[4] The increase attributable to inflation, real CMI, and allowable intensity, calculated as the product of the rates of increase of those factors (that is, 1.031×1.01×1.025=1.067 for 1987).
[5] Figures supplied by HCFA's Office of the Actuary.
[6] The actual increase in average cost per case divided by the increase attributable to inflation, real CMI, and allowable intensity (that is, 1.149/1.067=1.076, a 7.6 percent residual for 1987).

We believe that an adjustment for capital efficiency and cost-effectiveness should take into account the efficiency and effectiveness of the capital resources present in the base year for the capital prospective payment system. We do not believe that Medicare capital payment rates should provide for maintenance of capital in excess of the level that would be produced in an efficiency-oriented competitive market. A capital efficiency adjustment should be designed to give hospitals an incentive to reduce inefficiency and ineffectiveness in capital resources. The analysis in Table 6 suggests that, in order to restore the Federal rate to the level at which it would have been if capital costs had not been excessive in the years before the implementation of capital prospective payment, a cumulative reduction in the rate of 27.7 percent (1.52/2.101=0.7235, or −27.7 percent) would be necessary.

We are considering a range of options for such an efficiency adjustment. In particular, we are considering whether to provide, in the design of such an adjustment, for eventually reducing the rate by the entire 27.7 percent suggested by the above analysis. Alternatively, the eventual reduction to the rate could reflect some part, but not all, of the excess of actual capital cost increases over the identified factors. We are also considering the appropriate rate at which an adjustment based on the above analysis should be applied to the update factors. On the assumption that the updates to the rate should be reduced by the full 27.7 percent, such an adjustment could be accomplished over a shorter or longer period of time. For example, HCFA could adjust the updates to the rate over a period of 20 years at the rate of 1.4 percent per year. Similarly, the adjustment could be made over 5 years at the rate of 5.5 percent per year.

We are proposing that HCFA have the discretion to apply an efficiency adjustment to the capital input price rate of change in determining the annual update factor. We invite comment on the advisability of such an adjustment, on the proportion of the residual that should be employed in adjustments to the update, and on the rate at which such an adjustment should be applied. We also welcome information on possible sources of data that would be useful in developing or refining such an adjustment, and on the possible effects of such an adjustment on various segments of the hospital industry.

6. Proposed FY 1996 Update Factor

Table 7 summarizes HCFA's proposed FY 1996 update factor in comparison with the recommendation presented by ProPAC in its March 1, 1995 report.

ProPAC recommends a 4.1 percent update for FY 1996, in comparison to HCFA's proposed update of 1.5 percent. As Table 5 shows, the different update methodologies adopted by ProPAC and HCFA, respectively, can be expected to result in higher ProPAC update recommendations during some years, and higher HCFA update recommendations during other years. (As we note in the discussion of Table 5, the values for the ProPAC index in that table reflect recent projections that were not available to ProPAC at the time of its March 1, 1995 report.)

TABLE 7.—COMPARISON OF FY 1996 UPDATE RECOMMENDATIONS

	HHS	ProPAC
Capital Input Price Index	1.8	4.1
Difference Between HCFA & ProPAC CIPI's		2.3
Subtotal	1.8	4.1

TABLE 7.—COMPARISON OF FY 1996 UPDATE RECOMMENDATIONS—Continued

	HHS	ProPAC
Policy Adjustment Factors:		
Productivity	.....	(1)
Efficiency	(2)	.....
Intensity	0.0	.....
Science and Technology	.....	(1)
Intensity	.....	(3)
Real Within DRG Change	.....	(4)
Subtotal	0.0	0.0
Case Mix Adjustment Factors:		
Projected Case Mix Change	−0.8	−1.0
Real Across DRG Change	0.8	0.8
Real Within DRG Change	(5)	0.2
Subtotal	0.0	0.0
Effect of 1993 Reclassification and Recalibration	−0.3	.....
Forecast Error Correction	0.0	0.0
Total Recommended Update	1.5	4.1

[1] Adjustments for scientific and technological advance and productivity offset each other. No specific values were recommended.
[2] Efficiency adjustment may be adopted after public comment.
[3] Included in ProPAC's Productivity Measure.
[4] Included in ProPAC's Case Mix=Adjustment.
[5] Included in HHS' Intensity Factor.

7. Possible Adjustments to the Federal Rate and the Hospital-Specific Rates

In the Addendum to this proposed rule, we discuss the effects of the expiration of the statutory budget neutrality provision on rates and aggregate payments under the capital-prospective payment system. Under that provision, we set the capital-prospective payment system rates during FY 1992 through FY 1995 so that payments would equal 90 percent of estimated Medicare payments that would have been made on a reasonable cost basis for the fiscal year. As a result of the provision's expiration, both the capital-prospective payment system rates and payments under the transition system will increase significantly. The proposed FY 1996 Federal rate is 21.3 percent higher than the FY 1995 Federal rate. We estimate that payments will increase by 20.45 percent in FY 1996 compared to FY 1995, and that FY 1996 payments will exceed projected FY 1996 Medicare hospital inpatient capital costs by 4.52 percent.

We have considered possible revisions to the capital-prospective payment rates that would moderate these substantial increases in payments. These revisions could be made in conjunction with, or in place of, an update framework adjustment to account for possible inefficiency in capital spending prior to the capital-prospective payment system base period. While these possible revisions to the rate are not, strictly speaking, elements of the update framework, we are presenting them within this context in order to allow commenters the opportunity to consider all the possible rate revisions that may affect the future levels of rates and payments. We solicit comment on whether to make any of these possible revisions to the rate. Generally, we believe that reductions in Medicare spending should be addressed in the context of health care reform.

Under § 412.308, HCFA determined the standard Federal rate, which is used to determine the Federal rate for each fiscal year, on the basis of an estimate of the FY 1992 national average Medicare capital cost per discharge. The FY 1992 national average Medicare capital cost per discharge was estimated by updating the FY 1989 national average Medicare capital cost per discharge by the estimated increase in Medicare inpatient capital cost per discharge. As we discussed in the preamble to the final capital-prospective payment system rule on August 30, 1991 (56 FR 43366–43384), HCFA used the July 1991 update of HCRIS data to estimate an FY 1989 national average Medicare cost per case of $527.22. HCFA then updated that amount to FY 1992 by using an actuarial projection of a 31.3 percent increase in Medicare capital cost per discharge from FY 1989 to FY 1992. The standard Federal rate was thus based on an estimated FY 1992 national average Medicare capital cost per discharge of $692.24 (prior to the application of a transfer adjustment and a payment parameter adjustment).

Section 13501(a)(3) of Public Law 103–66 amended section 1886(g)(1)(A) of the Social Security Act to require that, for discharges occurring after September 30, 1993, the unadjusted standard Federal rate be reduced by 7.4 percent. As we discussed in the September 1, 1993 final rule for FY 1994 (58 FR 46316ff.), the purpose of that reduction was to reflect revised inflation forecasts, as of May 1993, for the increases in Medicare capital cost per discharge during FY 1989 through FY 1992. By that time, the estimate of increases in Medicare inpatient capital costs per discharge from FY 1989 through FY 1992 had declined from 31.3 percent to 21.57 percent. The 7.4 percent reduction to the Federal rate was calculated to account for these revised forecasts (1.2157/1.313=.926, a 7.4 percent decrease). That provision of Public Law 103–66 also required that, for cost reporting periods beginning on or after October 1, 1993, the Secretary redetermine which hospital payment methodology should be applied under the capital prospective payment system transition rules to take into account the 7.4 percent reduction to the Federal rate.

As a result of the reduction required by Public 103–66, the standard Federal rate is now based on an estimated FY 1992 Medicare inpatient capital cost per case of $641.01 ($692.24×.926). At the time of the Public Law 103–66

reduction to the Federal rate, actual cost report data on the FY 1992 Medicare capital cost per discharge were not yet available. The reduction was based on cost report data for FY 1990 and FY 1991, and a revised projection of the rate of increase in Medicare capital costs per discharge during FY 1992. We now have extensive cost report data for FY 1992. The December 1994 update of HCRIS data shows an audit-adjusted FY 1992 Medicare inpatient capital cost per discharge of $593.15, or 7.47 percent lower than the estimate on which the Federal rate is currently based. We do not believe that the Federal rate should necessarily remain at a level that reflects a known over-estimation of base year costs. We are therefore inviting comment on the appropriateness of an estimated 7.47 percent reduction to the unadjusted standard Federal rate to account for that over-estimation.

Under § 412.328, HCFA determined the FY 1992 hospital-specific rate by using a process similar to the process for determining the FY 1992 Federal rate. The intermediary determined each hospital's allowable Medicare inpatient capital cost per discharge for the hospital's latest cost reporting period ending on or before December 31, 1990. The intermediary then updated each hospital's FY 1990 allowable Medicare capital cost per discharge to FY 1992 based on the estimated increase in Medicare inpatient capital cost per case. As in the case with the Federal rate updates, current data demonstrate that the estimates used to update the hospital specific rates from FY 1990 to FY 1992 were overstated. On the basis of the current data, we are also considering whether to correct for the original rate of increase estimates by decreasing the hospital-specific rates 8.27 percent. Such a reduction would not apply to hospital-specific rates that have been redetermined for a later cost reporting period. This is because the rate of increase estimates were not employed for redeterminations after FY 1992.

We estimate that savings from simultaneous reductions of 7.47 percent to the Federal rate and 8.27 percent to the hospital-specific rates would be approximately $2.7 billion for FY 1996 through FY 2000. Capital-prospective payments would be about 98 percent of Medicare inpatient capital costs in FY 1996 and about 95 percent of Medicare costs in FY 2000. By comparison, we estimate that payments under current law and regulations will be 104 percent of Medicare costs in FY 1996 and 102 percent of Medicare costs in FY 2000.

Finally, the analysis of capital cost increases prior to the implementation of the prospective payment system for capital-related costs could be the basis for an immediate adjustment to the Federal rate to compensate for the effects of the expiration of budget neutrality. As discussed in section V.A.6 above, a reduction to the Federal rate of 27.7 percent would be necessary to restore the rate to the level at which it would have been if capital costs had not exceeded the level that can be accounted for on the basis of known factors. Such an adjustment could be accomplished gradually over a number of years within the context of the update framework. We discuss how the residual could be employed within the context of the update framework in section V.A.6 above. Alternatively, some large part of the residual could be removed from the rate in a single adjustment. For example, retaining the FY 1995 budget neutrality adjustment of 0.8432 in the standard Federal rate would have the effect of recapturing a large part of the residual of capital cost increase over the identifiable factors. The remainder of the residual, if appropriate, could be removed from the rate on a gradual basis through an adjustment to the update factor, as discussed in section V.A.6 above. We are therefore requesting comments on the appropriateness of such measures, particularly on the appropriateness of retaining the FY 1995 budget neutrality adjustment in the rate as an efficiency measure.

We estimate that savings from this approach would be approximately $5.5 billion for FY 1996 through FY 2000. Capital-prospective payments would be about 92 percent of Medicare inpatient capital costs in FY 1996 and about 88 percent of costs in FY 2000.

B. Adjustment to the Capital Prospective Payment System Federal Rate for Capital-Related Taxes (§§ 412.308, 412.312, and 412.323)

In our September 1, 1994 final rule, we discussed an adjustment to the capital prospective payment system for capital-related tax costs. As we noted in that discussion, such an adjustment would be designed to remove a possible inequity in the capital prospective payment system. While capital-related taxes constitute a unique cost imposed on an identifiable group of hospitals, those costs are currently reflected in the Federal capital rate paid to all hospitals. Several commenters have pointed out that all hospitals are thus being reimbursed for costs that only some hospitals pay. We noted in our previous discussion that introducing an adjustment was then premature because we still lacked adequate data on capital-related tax payments and payments in lieu of taxes. Accordingly, we announced a special initiative to collect and verify the data on hospital capital-related tax costs. We also solicited comments on the merits of a possible tax adjustment and on the development of an adjustment methodology. Below we discuss a proposal for such a tax adjustment. (The proposed capital rates in Addendum D, and impact analysis in Appendix A.VII are based on the proposal for a tax adjustment.) We then discuss several difficult issues that such an adjustment may pose. We also respond to public comments on the merits of introducing a tax adjustment to the capital prospective payment system. Finally, we describe the preliminary results of our data collection effort and discuss several questions and issues that arose in the course of the data collection effort.

Some commenters have maintained that the absence of an adjustment for capital-related tax costs poses a serious issue of equity. The argue that capital-related tax costs constitute a fully distinguishable category that can be readily identified and that applies to an identifiable group of hospitals. In fact, this cost may be even more clearly delineated than other costs for which we provide adjustment to prospective system rates, since whether a hospital bears such costs is determined by law entirely outside the Social Security Act. In the absence of an adjustment for those hospitals that actually bore the tax costs represented in the Federal rate, all hospitals are being reimbursed through the Federal rate portion of their payments for costs imposed only on an identifiable subset of hospitals.

Since the publication of the September 1, 1994 final rule we have directed considerable analysis toward the development of an equitable adjustment for capital-related tax costs. That analysis has revealed issues that we have not yet been able to resolve fully. These issues involve equity to hospitals that may become subject to capital-related taxes in the future. They also involve our responsibility to protect the Medicare trust fund from possible manipulation as well as from any new open-ended commitments to increase Medicare payments. Although we have not yet fully resolved all of these issues, we remain open to discussion on a special adjustment to the capital Federal rate for tax costs, and to facilitate such a discussion we present a proposal for a special tax adjustment. We believe that presentation and analysis of a proposal provide the best opportunity for a full and public discussion of all the issues surrounding a possible adjustment for capital-related tax costs.

From our discussions with representatives of hospital associations and individual hospitals, we expect that this proposal will generate numerous substantive comments both for and against a possible adjustment for capital-related taxes. We will analyze all timely public comments carefully before deciding whether or not to proceed with an adjustment for taxes in the final rule. We hope that the process of public comment will produce a solution that in the most appropriate manner simultaneously protects the trust fund and satisfies the equity concerns of all hospitals.

In order to facilitate this discussion, we are proposing to provide for a special adjustment for the capital-related tax costs of hospitals that paid such taxes for cost reporting periods beginning in FY 1992. The tax costs of those hospitals were included in the computation of the capital Federal rate. Hospitals that have begun operation since FY 1992 would also be eligible for an adjustment. We are further proposing an adjustment of the Federal rate to offset the amount of capital-related tax costs originally included in the computation of the rate. In this way, adoption of the tax adjustment will be budget neutral: Capital payments will neither increase nor decrease merely because of the tax adjustment.

For those hospitals that are eligible for an adjustment, we propose to apply a hospital-specific Medicare tax cost per discharge amount to the Federal rate portion of each payment for each discharge from the hospital, beginning October 1, 1995. The hospital-specific Medicare tax cost per discharge would be determined on the basis of the updated FY 1992 base year cost, as described below.

The serious issues that arise in connection with the implementation of a tax adjustment concern hospitals whose tax-paying status has changed since FY 1992. We received several inquiries about the treatment of such hospitals. Some hospitals that paid capital-related taxes in FY 1992 may no longer be subject to such taxes (for example, because they converted to non-proprietary status in a taxing jurisdiction that does not tax non-proprietaries). Other hospitals may have been in operation during FY 1992, but have only become subject to tax payments since that time, either by a change in status (that is, from non-proprietary to proprietary) or by the action of state or local authorities to impose capital-related taxes on entities that had not previously been subject to such taxes.

It is the situation of hospitals that have become subject to taxes through the action of state or local authorities that poses the most serious issues of equity and protection of the trust fund. On the one hand, it may seem unfair to prohibit hospitals on whom a tax cost is imposed after FY 1992 from receiving an adjustment available to hospitals on whom a tax cost was imposed in FY 1992. On the other hand, a capital Federal rate tax adjustment should not be vulnerable to possible efforts by state or local authorities to gain revenues from increased Medicare payments to hospitals. Nor should a tax adjustment provide an open-ended commitment to increase the overall level of Medicare capital payments as state and local governments extend taxation to previously tax-exempt facilities. The capital Federal rate tax adjustment that we are proposing reflects only the FY 1992 capital-related tax costs included in the original computation of the Federal rate. It cannot reflect costs imposed on hospitals by the extension of state and local capital-related taxes after FY 1992. Therefore, in the absence of some additional budget neutrality provision, extending the tax adjustment to hospitals that become subject to capital-related taxes after FY 1992 could significantly increase the overall level of Medicare capital payment.

We are proposing that hospitals will not qualify for the adjustment if they become subject to tax payments because of state or local action to change tax laws (for example, by extending taxation to non-proprietary hospitals) since FY 1992. We are doing so both to prevent the possibility that state and local authorities could gain revenues through increased Medicare payments, and to prevent the adoption of a tax adjustment from producing large increases in Medicare capital payments if additional jurisdictions impose taxes on non-proprietary hospitals. Arguably, it is appropriate to exclude such hospitals from a tax adjustment since they had no capital-related tax costs included in the original rate computation, and one feature of a prospective system is that hospitals are at risk for cost changes. In addition, the updates to the Federal rate may be adequate to compensate such hospitals for tax costs imposed on them since FY 1992. Finally, at least during the transition period, hospitals on whom taxes are newly imposed may find some relief through the exceptions provision. We recognize, however, that this policy might be viewed as penalizing newly taxed hospitals for changes in circumstances over which they have no control. We invite comment on the appropriateness of this proposal, which raises issues of equity between hospitals subject to capital-related taxes in FY 1992 and those newly subject to such taxes after FY 1992. We also invite suggestions and comments on other approaches to dealing with the situation of hospitals that become subject to taxes after FY 1992. We believe that any proposal to deal with the situation of such hospitals should protect the Medicare trust fund against an open-ended commitment to increase Medicare payments in order to reimburse hospitals for Medicare's share of newly imposed capital-related tax obligations.

In particular, we invite comment on the possibility of providing an adjustment to such hospitals on a budget-neutral basis. Under such an approach, an annual tax adjustment budget neutrality factor would be applied to the Federal rate to account for the estimated cost of the tax adjustment over and above the costs attributable to capital-related taxes in the FY 1992 base year. In this way, payments including tax adjustments to hospitals that have become subject to taxes since FY 1992 would not exceed the amount of payments in the absence of an adjustment to such hospitals. Such an approach would prevent the tax adjustment from becoming an open-ended drain on the Medicare trust fund. However, such an approach necessarily involves reducing the rate beyond the level accounted for by the capital-related tax costs originally included in the rate computation. In other words, such a budget neutrality adjustment would reduce the amount of other capital-related costs incorporated in the original rate computation. Under such an approach, the reductions in payments to hospitals that do not pay taxes would exceed the amount of capital-related taxes included in the original rate computation; arguably, then, this approach would inappropriately disadvantage hospitals that do not pay capital-related taxes.

With regard to the situation of other hospitals whose tax status has changed since FY 1992, we do not believe that hospitals which are no longer subject to capital-related taxes should receive an adjustment to their capital Federal rate payments. Therefore, we are providing in this proposed rule that a hospital (or a related organization) must be directly subject to capital-related taxes in order to qualify for the capital Federal rate tax adjustment. Hospitals may be required to verify their tax status by appropriate documentation in the course of normal auditing activity.

In addition, we are proposing that no adjustment would be made for hospitals whose status changed from non-proprietary to proprietary after FY 1992. The decision to change status to a proprietary hospital is a voluntary decision of the hospital's management, and we therefore believe that an adjustment to allow special payment for additional taxes that result from such a decision is not warranted.

However, we are proposing that hospitals which were not in operation in FY 1992, should be able to qualify for the adjustment. We are therefore providing that the intermediaries should accept data on capital-related tax payments from hospitals that have begun operation since FY 1992. Such hospitals should contact their intermediaries as soon as possible, but in any case no later than July 31, 1995, to submit the appropriate data and documentation. Such hospitals are responsible for identifying themselves and submitting the required information on their own initiative before that date. Specifically, each hospital should submit the exact amount of capital-related tax payments via resubmission of Medicare cost report Worksheet A–7, Part III, Column 6, Line 5 for the first year of operation. Each hospital should also submit documentation of their capital-related tax payments during that year for verification by the intermediaries. We will follow the same procedure discussed below to establish each hospital's FY 1996 Federal rate tax add-on amount.

Comment: We received several comments opposing a possible tax adjustment to capital-PPS Federal rate payments. Specifically, the commenters alleged that there are inpatient service costs associated with maintaining nonprofit status that are sufficient either to balance the costs of capital-related taxes borne by some hospitals, or to justify a special adjustment to non-proprietary hospitals for those costs. The commenters cited patient service costs including provision of 24-hour emergency room services to all regardless of ability to pay, public information and educational services, and general provision of charity care. The commenters therefore recommended either that we make no adjustment for capital-related tax costs, or that we also initiate a process to compensate nonprofit hospitals for the costs of maintaining that status through an appropriate adjustment.

Response: Capital-related tax costs constitute a fully distinguishable category that can be readily identified and that applies to an identifiable group of hospitals. We do not believe that the existence of costs to maintain tax-exempt status justifies a separate adjustment under the capital prospective payment system. The costs cited by the commenters are largely inpatient operating costs, or even non-inpatient costs (e.g., for outpatient services). To the degree that the cited costs are not inpatient capital costs, they do not provide an appropriate basis for adjustment to the capital-PPS Federal payment rate. Furthermore, we believe that such costs may be adequately compensated by existing arrangements with Medicare and other payers (e.g., various state and local subsidies for charity care and bad debt, as well as the existing Medicare and Medicaid disproportionate share adjustments). Historically, many non-proprietary hospitals have received tax appropriations from state and local governments to compensate them for otherwise uncompensated care. If these hospitals no longer had tax-exempt status, they would no longer receive some of these subsidies. For the purposes of discussion we propose to institute a special adjustment to the capital-PPS Federal rate for tax costs. However, we will continue to analyze this issue of equity in preparation for the final rule. We welcome further comments on this issue. We would also appreciate submission of any data or analysis that may be useful.

As we discussed in our prior **Federal Register** notice (59 FR 45377), adoption of any adjustment to the capital-PPS Federal rate payment for capital-related tax costs requires a corresponding adjustment of the Federal rate to offset the amount of capital-related tax costs originally included in the computation of the rate. In this way, adoption of the tax adjustment will be budget neutral: Capital payments will neither increase nor decrease merely because of the adoption of the tax adjustment. Adoption of a tax adjustment also requires hospital-specific information on capital-related tax costs in order to determine the appropriate adjustment amount for each hospital.

Accordingly, we instructed the Medicare fiscal intermediaries in October 1994 to contact each prospective payment system hospital in writing in order to obtain the necessary data on capital-related tax costs for the first cost-reporting period beginning on or after October 1, 1991 (the first year under the capital prospective payment system). Specifically, the intermediaries asked each prospective payment system hospital to submit the exact amount of capital-related tax costs via resubmission of Medicare cost report Worksheet A–7, Part III, Column 6, Line 5 for the first capital prospective payment system year. Hospitals were also required to submit documentation of their capital-related tax costs for verification by the intermediaries. The intermediaries were further instructed to verify the amount of the capital-related tax costs for each hospital, and to submit that amount, as verified and accepted, to HCFA via the Hospital Cost Report Information System (HCRIS).

We have used the information submitted in response to the tax data collection effort to create a special HCRIS data set. The tax adjustment file contains hospital identifying information (from Worksheets S–2 and S–3), capital-related tax costs (from Worksheet A–7), total capital-related costs (from Worksheets B, Parts II and III, Columns 27, Lines 103, respectively), and total Medicare inpatient capital-related cost data (from Worksheet D, Part I, Columns 6 and 8, Line 101, for routine costs; and from Part II, Columns 6 and 8, Line 101, for ancillary costs). We have also incorporated into this data set information from the regular HCRIS files on hospitals that did not submit the requested information and documentation on any capital-related tax costs. This latter information is necessary in order to determine the proportion of verified capital-related tax costs to all capital-related costs in the initial capital-PPS year. From this file we have determined the Medicare inpatient capital-related tax cost per discharge for each hospital that submitted verified data. We have also developed a proposed adjustment to the Federal capital rate, to account for the capital-related tax costs included in the original Federal rate computation.

Approximately 45 percent of PPS hospitals responded to the data collection effort. We have verified data on 64 percent of proprietary hospitals and 39 percent of non-proprietary hospitals. We have verified that 60 percent of proprietary hospitals and 8 percent of non-proprietary hospitals had capital-related tax costs in the initial capital-PPS year. We still lack verified data from 36 percent of proprietary hospitals. In addition, there may be non-proprietary hospitals who have not yet provided documentation for their FY 1992 tax costs. Approximately 7 percent of PPS hospitals reported capital-related tax costs on previous cost report submissions, but have not yet submitted documentation to the intermediaries for verification.

We therefore instructed the intermediaries to notify hospitals that did not respond to the initial request for tax information and documentation, that

further submissions will be accepted until June 1, 1995. The intermediaries were instructed to send the appropriate notification no later than May 1, 1995. In order to be eligible for a capital-related tax cost adjustment, a hospital must submit the exact amount of capital-related tax payments via resubmission of Medicare cost report Worksheet A–7, Part III, Column 6, Line 5 for the first capital-PPS year. A hospital must also submit documentation of those capital-related tax payments for verification by the intermediary. A hospital which has not submitted the required data and documentation to its intermediary by June 1, 1995 will *not* qualify for a tax adjustment.

We also instructed the intermediaries to notify each hospital that did respond to the initial request for tax information and documentation, of the amount of total tax cost as reviewed, verified, and approved by the intermediary. The intermediaries notified the hospitals that they may provide further information and documentation on costs that the intermediary may have disallowed. The intermediaries were instructed to send the appropriate notification no later than May 1, 1995. The notification from the intermediaries informed hospitals that they must submit any further information and documentation by June 1, 1995. The intermediaries will submit any revised tax data, including new data, to HCFA via HCRIS no later than July 1, 1995. Hospitals that did submit tax data and documentation in response to the previous request, and that have no objections to the amount approved by the intermediary, need take no further steps. Hospitals will receive an appealable final notification of their tax adjustment amount once the final rule implementing the adjustment is published.

We used the following methodology to calculate each hospital's Medicare capital-related tax cost per discharge for the first capital prospective payment system year. We first developed the ratio of the hospital's Medicare inpatient capital-related costs to total capital costs. We then applied that ratio to the amount of total hospital tax costs. The result is the hospital's Medicare inpatient capital-related tax cost. We used this method to compensate for the absence in HCRIS of the statistics, on Worksheet B–1 of the cost report, that are used for cost allocation purposes. In the absence of those statistics, applying the ratio of Medicare inpatient capital-related costs to total capital-related costs provides the most accurate way to derive Medicare's share of capital-related taxes from total hospital capital-related taxes. We then divided Medicare's share of inpatient capital-related tax costs by Medicare inpatient discharges to determine the Medicare tax cost per discharge.

We propose to use the following methodology to adjust the Federal rate to account for the tax costs included in the original computation of the rate. We propose to subtract the total FY 1992 Medicare capital-related taxes allocated to Medicare for all hospitals from the total FY 1992 Medicare capital-related costs for all hospitals. The result is FY 1992 Medicare capital-related costs without taxes. We then determine the ratio of FY 1992 Medicare capital-related costs without taxes to total FY 1992 Medicare capital-related costs (including capital-related tax costs). Finally, we apply this ratio to the base Federal rate to remove the capital-related tax costs currently incorporated into that rate. As a result of these calculations, we are providing in this proposed rule for an estimated 1.14 percent decrease to the base Federal rate to account for the tax costs originally included in the rate. We discuss the effect of this preliminary adjustment to the Federal rate in Part III of the Addendum to this proposed rule.

In estimating the proposed adjustment to the final rule, we took into account not only the FY 1992 capital-related tax costs as verified by the intermediaries, but also tax costs previously reported by hospitals that have not yet been verified by the intermediaries. We counted the latter costs, only for the purposes of estimating the Federal rate adjustment in this proposed rule, in order to provide the hospital industry with an estimate that reflects the maximum adjustment to the rate, given the current data. Since we are also providing, in this proposed rule, an additional opportunity for hospitals to report capital-related tax data, some hospitals that have not yet verified previously reported tax costs may yet provide us with appropriate documentation. We believe that the estimated Federal rate adjustment in this proposed rule should reflect those costs that may yet be verified. If this proposal is retained in the final rule, we would recalculate the adjustment to the Federal rate, using only data on FY 1992 tax costs that has been documented and verified by the intermediaries, and submitted to HCFA via HCRIS by July 1, 1995. (Hospitals that have not yet submitted documentation to verify their FY 1992 capital-related tax costs must do so no later than June 1, 1995 in order to qualify for a tax adjustment.) The final adjustment to the capital Federal rate could thus be higher or lower than the adjustment in this proposed rule, depending upon the results of further reporting and verification activity.

In our previous discussion of a possible tax adjustment, we outlined two possible methodologies for determining the amount of the actual payment adjustment to hospitals. One possible method was to determine a property tax factor (PTF) on the basis of the ratio of the FY 1992 Medicare tax cost per discharge to the hospital's FY 1992 adjusted Federal capital rate. This percentage would then be applied to the Federal rate for each discharge from an eligible hospital for discharges on or after October 1, 1995. However, we expressed reservations about this approach. Under this approach, payments would increase or decrease purely as a function of Federal rate changes. As a result, the change in payments received by a hospital under this methodology would correlate with the changes to the Federal rate. However, changes in the Federal rate are driven by factors that may not correlate with changes in capital-related tax costs.

The second option was to apply a hospital-specific Medicare tax cost per discharge amount from the FY 1992 base year to the Federal rate portion of each payment for each discharge from an eligible hospital, beginning October 1, 1995. Under this approach, each hospital's FY 1992 Medicare tax cost per discharge would be calculated as described above. The FY 1992 tax cost per discharge would then be updated by an appropriate factor for subsequent periods. This direct dollar add-on approach has the advantage of separating the tax adjustment from changes to the Federal rate. A difficulty with this approach is the selection of an appropriate update mechanism. Any update mechanism would have to account for any differences between the factors that drive capital-related cost increase in general and those that drive capital-related tax cost increases in particular (e.g., changes in the assessed value of property and changes in tax rates). Any update mechanism would also need to be insulated from the effects of actions by taxing authorities, so that the amount of Medicare payment cannot be manipulated to increase tax revenues to state and local authorities. In addition, it will be several years before we have sufficient data on tax costs from Worksheet A–7 of the cost report to analyze trends in tax cost increases.

We received no comments on the discussion of possible adjustment methodologies. We have therefore determined to proceed with a proposed

adjustment methodology that reflects the considerations we presented in our previous discussion (59 FR 45376ff.) Our proposal is to update each hospital's FY 1992 Medicare tax cost per discharge to FY 1996 by the total capital-PPS Federal rate updates for that period. The cumulative update is 14.75 percent (the product of the update factors for FY 1993, FY 1994, FY 1995, and the proposed factor for FY 1996: 6.07 percent, 3.04 percent, 3.44 percent, and 1.50 percent). Once we have updated each hospital's Medicare tax cost per discharge, we would study the issues involved in developing an appropriate update mechanism. If we adopt a tax adjustment in the final rule, we propose to determine an update mechanism by FY 1998. We would then adjust each hospital's Medicare Federal rate tax add-on amount to reflect the appropriate updates under the mechanism.

We propose to use the hospital-specific Medicare tax cost per discharge, as updated to FY 1996, as the capital-related tax add-on to the Federal rate portion of payment for each discharge, beginning on October 1, 1995. The Federal rate tax add-on amount would be added to the Federal rate payment amount prior to the application of the appropriate Federal rate payment percentages under the capital prospective payment system transition methodologies (e.g., 50 percent for fully prospective hospitals in FY 1996). This is because both old capital reasonable cost payments under the hold harmless methodology, and hospital-specific rate payments under the fully prospective methodology, reflect a hospital's actual cost experience, including the hospital's costs for capital-related taxes. Adding the tax adjustment amount outside the Federal rate payment percentage would thus constitute double payment for those costs.

Since we are presenting a proposal for a capital-related tax adjustment, the impact analysis in Appendix A.VII of this proposed rule includes two new categories of hospitals. Table V of the Appendix shows that, with all the changes in this proposed rule, average payments per case to all hospitals are estimated to increase 20.45 percent. If a tax adjustment is instituted, average payments per case to hospitals that we expect to receive the adjustment are estimated to increase 20.9 percent (an average increase of $139 per case from FY 1995 to FY 1996). In contrast, payments to other hospitals are expected to increase 20.2 percent (an average increase of $117). We also estimate that, in the absence of a tax adjustment, payments to hospitals that would have received the adjustment would increase 19.1 percent (an average increase of $127), and payments to other hospitals would increase 21.1 percent (an average increase of $122).

In the course of the data collection initiative, we received one other inquiry that must be addressed in this proposed rule. Several intermediaries and other parties inquired about the treatment of taxes included in the terms of leases between unrelated parties on real property and equipment. Many leases of equipment and real estate require the lessee to pay the lessor's property tax costs on the leased property. In the course of the data collection effort, we instructed the intermediaries not to include such costs as provider tax costs for the purposes of the capital-related tax cost data collection effort. We have several reasons for adopting this position. The first reason is that, in such cases, the obligation to pay the lessor's tax costs arises from a contractual commitment rather than from the action of a taxing authority. In other words, it is the owner of the property, not the lessee, that bears the tax obligation. In case the lessee fails to pay the amount for taxes specified under the lease, the lessee would be subject not to action on the part of the taxing authority for failure to pay taxes due, but only to action on the part of the lessor for failure to meet a contractual obligation. For this reason, where a provider is obligated by the terms of a lease with an unrelated party to pay the lessor's tax costs, we believe that those costs are lease costs rather than tax costs for the provider.

Even if we agreed that such costs should be considered tax costs, however, we still do not believe that they ought to be included within the scope of an adjustment for capital-related taxes. The purpose of making a tax payment adjustment within a rate-based system is to account for the unique costs of an identifiable group of hospitals. There is an identifiable group of hospitals that make tax payments on the value of the real assets that they own. Virtually all providers lease some real property or equipment. Thus, virtually all providers pay tax costs on leased property (whether or not the lease specifically identifies the portion of the lease payments that reflect the owner's tax costs). Since such costs are not unique to an identifiable group of hospitals, they are not an appropriate basis for a tax payment adjustment. These costs continue to be encompassed within the Federal rate.

An additional consideration involves differences in lease terms. In some leases, tax costs on the leased property are separately identified in the terms of the lease agreements. It can even be the case that, under the terms of the lease, the annual tax bill is merely forwarded to the lessee for direct payment to the taxing authority. In other leases, the tax costs are not specifically identified, although they are certainly reflected, like other costs of the lessor, in the designated lease payments. In these latter cases, it may be administratively difficult to verify what portion of the lease payments reflect the lessor's tax costs as opposed to the lessor's other costs. We believe that it would be unfair to treat hospitals differently on the basis of differences in lease terms.

Tax costs included in leases between related parties, however, should be treated in accordance with the established rules for related party costs under section 413.17 of the regulations. In these cases, it is not the existence of the lease, but rather the relationship of common ownership or control, that provides the basis for considering such costs as allowable capital-related tax costs for the hospital. Such costs would be treated as allowable capital-related tax costs even in the absence of a formal lease between the related parties. We are therefore providing, in this proposed rule, that only tax costs borne by a hospital (or a related organization) as the owner of property qualify for consideration under this special payment adjustment.

VI. Proposed Changes for Hospitals and Units Excluded From the Prospective Payment Systems

A. New Requirements for Certain Long-Term Care Hospitals Excluded From the Prospective Payment Systems (§§ 412.23(e))

1. Effect of Change of Ownership on Exclusion of Long-Term Care Hospitals

Some questions have arisen as to whether a hospital's compliance with the length-of-stay requirement for long-term care (LTC) hospitals is affected by its sale to a new owner. A hospital that has operated as a general acute care facility and is paid under the prospective payment system may experience an increased length of stay that, if continued for all of the 6-month period immediately preceding the start of a cost reporting period, would qualify the facility for an LTC hospital exclusion. If there is a change of ownership, the issue arises whether the part of the hospital's operating experience that preceded the change of ownership should be counted toward the 6-month period of operating experience needed to justify exclusion

of the hospital, under its new owner, from the prospective payment system.

After reviewing this issue, we have concluded that the operating experience of the hospital is the relevant consideration. If a change of ownership occurs at the start of a cost reporting period, or at any time during the 6 months immediately preceding the start of that period, the hospital is not required to begin a new qualifying period. To clarify current regulations, we would specify under § 412.23(e)(2) that if a hospital undergoes a change of ownership at the start of a cost reporting period, or at any time within the preceding 6 months, it may be excluded from the prospective payment system as an LTC hospital if it is otherwise qualified and maintained an average length of stay in excess of 25 days, under both current and previous ownership, for that 6-month period. To qualify for the exclusion, the hospital must have been continuously in operation for all of the qualifying period and participated continuously in Medicare as a hospital. That is, as in the case of any hospital experiencing a change of ownership, periods during which the hospital was closed or did not participate in Medicare could not be counted toward the required experience.

2. Revised Criterion on Purchase of Services by LTC ''Hospitals Within Hospitals''

Recently, some entities began to organize themselves under what they refer to as the ''hospital within a hospital'' model. Under this model, an entity may operate in space leased from a hospital and have most or all services furnished under arrangements by employees of the lessor hospital. The newly organized entity may be operated by a corporation formed and controlled by the lessor hospital, or by a third entity that controls both. In either case, the new entity seeks State licensure and Medicare participation as a hospital, demonstrates that it has an average length of stay of over 25 days, and seeks to obtain an exclusion from the prospective payment systems. However, the effect of excluding such a facility from the prospective payment systems would be to extend the LTC hospital exclusion, inappropriately, to what is for all practical purposes a LTC hospital unit.

To avoid granting LTC hospital exclusions inappropriately to hospital units while still allowing adequate flexibility for legitimate networking and sharing of services, we set forth additional exclusion criteria for these ''hospitals within hospitals'' in our September 1, 1994 final rule (59 FR 45389–45393). These regulations provide that, in addition to meeting the other LTC hospital exclusion requirements set forth in § 412.23, to be excluded from the prospective payment systems, a hospital located in the same building or in one or more entire buildings located on the same campus as another hospital must have a separate governing body, a separate chief medical officer, a separate medical staff, and a separate chief executive officer. These criteria are stated in regulations at §§ 412.23(e)(3)(i)(A) through 412.23(e)(3)(i)(D). In addition, the hospital must either perform most basic hospital functions without any assistance from the hospital with which it shares space (or from a third entity which controls both) (§ 412.23(e)(3)(i)(E)) or receive at least 75 percent of its inpatient referrals from a source other than the other hospital during the period used to demonstrate compliance with the length-of-stay criterion (§ 412.23(e)(3)(ii)). We note that the criterion under § 412.23(e)(3)(i)(E) does permit a hospital seeking exclusion to obtain certain services from a hospital occupying space in the same building, including food and dietetic services and housekeeping, maintenance, and other services necessary to maintain a clean and safe physical environment.

Since publication of the September 1, 1994 final rule, hospital representatives have stated that there are some situations in which basic hospital services other than those related to dietetic, housekeeping and maintenance functions could be furnished in a more cost-effective manner, or more conveniently for patients, if they were provided by the hospital in which the LTC hospital is located. For example, a hospital must be able to perform some lab tests, known as ''stat'' lab tests, on a 24-hour basis and to obtain results quickly. However, these tests are performed only infrequently, and it would not be cost-effective to maintain a separate in-house laboratory simply for them. Another frequently cited example of such services is specialized imaging procedures, such as CT scans and MRI procedures, which require very complex and costly equipment and may be available from only a few sources. If such procedures are available at the hospital in which the LTC hospital is located, it is safer and more convenient for patients for the services to be provided there than to transport the patient to another facility for them.

We recognize the need to allow LTC hospitals within hospitals greater discretion to purchase services like these from their ''host'' facilities, when it is done in a cost-effective and convenient way. However, it is also important that the LTC hospital exclusion criteria be clear and definite enough to limit LTC exclusions to bona fide separate hospitals. To balance these competing objectives, we propose to revise the exclusion criteria to describe the scope of services that can be obtained from the host hospital in financial terms, rather than by type of service.

Under our proposal, an otherwise qualified hospital could obtain a LTC hospital exclusion if the operating cost of services that it furnishes directly or obtains from a source other than the hospital with which it shares a building or campus (or from a third entity which controls both hospitals) constitutes at least 85 percent of its total inpatient operating costs. This test would be applied with respect to the cost reporting period or other time period used to establish the hospital's compliance with the length of stay criterion. (If a period other than a full cost reporting period is used, the LTC hospital is responsible for providing HCFA with verifiable information on its costs for that part of the period.)

We are proposing a criterion of 85 percent of total inpatient operating costs as an appropriate test of separateness based on the level of dietetic, housekeeping, and maintenance expenses incurred by a small sample of LTC hospitals for which we have readily available data. Our review showed that these expenses generally ranged from 5 to 17 percent of total inpatient operating costs for the periods under review. By setting the maximum acceptable level at 15 percent, we believe that we would allow hospitals an adequate margin for purchase of a limited range of services, without encouraging a level of dependence that calls into question the LTC hospital's status as a separate institution.

To implement this policy, we would specify under proposed § 412.23(e)(3)(i)(E) that the costs of any services a hospital obtains under contract or other agreements with a hospital occupying space in the same building or campus, or with a third entity that controls both hospitals, may not exceed 15 percent of the hospital's total inpatient operating costs, as defined under § 412.2(c). Thus, a LTC hospital would be permitted to obtain dietetic, housekeeping, maintenance or other services from another hospital with which it shares a building or campus (or from a controlling third entity), provided that the aggregate cost of these services is no more than 15

percent of its total inpatient operating costs.

B. Clarifying Changes for Excluded Hospitals and Units (§§ 412.23, 412.29, 412.30 and 412.130)

For clarity, we propose to revise § 412.23(e)(3) to state more clearly that a hospital sharing space with another can qualify for exclusion only if it meets all of the requirements of paragraphs (e)(3)(i)(A) through (e)(3)(i)(D) of that section and, in addition, those in *either* paragraph (e)(3)(i)(E), which deals with separate performance of services, or § 412.23(e)(3)(ii), which deals with the source of the hospital's patients.

In addition, we propose to restate the rules in §§ 412.29 and 412.30 to differentiate more clearly between criteria that apply when a hospital seeks exclusion of a rehabilitation unit that is created through an addition to its existing bed capacity, and the criteria that apply when a hospital seeks exclusion of a unit that has been created by converting existing bed capacity from other uses. We also plan to clarify the rules that apply when a hospital expands an existing rehabilitation unit by increasing its bed capacity or by converting existing capacity. These revisions are being proposed in response to complaints from some hospital representatives that the current regulations do not state our criteria clearly. We want to emphasize that these proposals merely restate, and do not change, existing rules. In conjunction with this proposed change, we would make a technical change to a reference in § 412.130.

C. Changes to the Regulations Addressing Limitations on Reimbursable Costs (§§ 413.30(e) and (f), and 413.35(b))

We propose to remove obsolete material from the regulations. Specifically, we propose to remove § 413.30(e)(1), (e)(3), and (e)(4), since sole community hospitals, risk-basis HMOs, and rural hospitals with less than 50 beds are included under 42 CFR part 412, which governs the prospective payment system for operating costs. In addition, we propose to remove § 413.30(f)(5), (f)(6), (f)(7) (a reserved paragraph), and (f)(9), concerning exceptions for hospital routine care, essential community hospital services, and hospital case-mix changes for cost reporting periods beginning before October 1, 1983. In conjunction with these proposed changes, we would incorporate the exemption requirements for new providers into paragraph (e) of § 413.30, redesignate subparagraphs under paragraph (f) of § 413.30, and make technical changes to references in §§ 413.30(f) and 413.35(b)(2).

D. Payment Window for Hospitals and Hospital Units Excluded from the Prospective Payment Systems (§ 413.40(c))

On January 12, 1994, we published an interim final rule with comment period to specify that inpatient hospital operating costs include costs of certain preadmission services furnished by the hospital (or by an entity that is wholly owned or operated by the hospital) to the patient up to 3 days before the date of the patient's admission to the hospital (59 FR 1654). The interim final rule implemented section 4003 of the Omnibus Budget Reconciliation Act of 1990 (Public Law 101–508), which amended section 1886(a)(4) of the Act. Because the definition of inpatient operating costs in section 1886(a)(4) of the Act applies to both prospective payment system hospitals and hospitals excluded from the system, the January 12, 1994 interim final rule revised the regulations governing excluded hospitals as well as those governing prospective payment hospitals. Specifically, we revised § 413.40(c)(2) of the regulations to reflect the 3-day payment window as required by the statute. We received 11 comments in response to the January 12, 1994 interim final rule.

On October 31, 1994, Congress enacted the Social Security Act Amendments of 1994. Section 110 of that legislation amended section 1886(a)(4) of the Act to state that, for hospitals excluded from the prospective payment system, the preadmission services to be included are those furnished during the 1 day (not 3 days) before a patient's admission.

To implement this provision, we propose to revise § 413.40(c)(2) to provide for a 1-day payment window for the hospitals and hospital units excluded from the prospective payment system. We note that the term ''day'' refers to the calendar day immediately preceding the date of admission, not the 24-hour time period that immediately precedes the hour of admission.

This change may have an impact on the application of the hospital's target rate per discharge. With the implementation of the 3-day window of section 4003 of Public Law 101–508, the hospital may have received an adjustment to account for costs that had been reported in the TEFRA base year as Part B, that as a result of the Public Law 101–508 change were reported as Part A costs. In light of the 1994 amendment, such adjustments will be reviewed and if necessary revised to assure that the costs designated as Part A during the base year continue to be comparable to the costs reported as Part A during the subsequent cost year.

In the final rule, we will address comments on the proposed change as well as the comments on the January 12, 1994 interim final rule.

E. Ceiling on the Rate of Increase in Hospital Inpatient Costs (§ 413.40(e) and (g))

We propose to revise § 413.40(e)(1) to clarify that a request for a payment adjustment must be received by a hospital's fiscal intermediary no later than 180 days from the date on the notice of amount of program reimbursement (NPR). As currently worded, this section states that a request must be ''made'' rather than ''received.'' We have consistently interpreted the word ''made'' to mean ''received by the fiscal intermediary'' since the original regulation was promulgated (47 FR 43282, September 30, 1982). However, use of the word ''made'' in § 413.40(e)(1) has resulted in varying interpretations of the timely filing requirement by hospitals and their fiscal intermediaries. In the interest of a uniform and consistent application of our policy, we are proposing to clarify the regulation by substituting ''received by the hospital's fiscal intermediary'' for ''made'' in § 413.40(e)(1).

In § 413.40(g)(1), we are proposing to clarify the determination of the amount of payment made to a hospital that receives a TEFRA adjustment. Since October 1, 1991, a hospital with operating costs in excess of its ceiling has been paid the ceiling plus an additional amount, as provided at § 413.40(d)(3). For these cost reporting periods, a hospital receives some payment for costs in excess of the ceiling. We are proposing to add a sentence to clarify that the amount of payment made after a TEFRA adjustment may not exceed the difference between a hospital's operating costs and the payment previously allowed.

VII. ProPAC Recommendations

We have reviewed the March 1, 1995 report submitted by ProPAC to Congress and have given its recommendations careful consideration in conjunction with the proposals set forth in this document. Recommendations 1, 4, and 5, concerning the update factors for inpatient operating costs, the update factor for hospitals paid on the basis of hospital-specific rates, and the update factor for hospitals excluded from the prospective payment system and distinct-part units, respectively, are

discussed in Appendix D of this proposed rule. Recommendations 2 and 3, concerning the update factors for inpatient capital costs and the single operating and capital update factor, respectively, are discussed in Section V of this proposed rule. Recommendation 11, concerning improving Medicare transfer payment policy, is discussed in section IV.A of the preamble. The remaining recommendations are discussed below.

A. Update to the Composite Rate for Dialysis Services (Recommendation 6)

Recommendation: For FY 1996, the composite rate for dialysis services should be updated to account for the following:

- The projected increase in the market basket index for dialysis services, currently estimated at 3.7 percent;
- A net adjustment of zero percentage points for scientific and technological advances and productivity; and
- A negative discretionary adjustment of 3.7 percentage points to reflect the relationship between payments and estimated fiscal year 1995 costs.

This would result in an update of zero percent.

Response: We agree with ProPAC's recommendation not to propose a payment rate increase for dialysis services. ProPAC's cost analysis indicates that, in aggregate, Medicare payments to independent dialysis facilities were about 12 percent higher than their Medicare allowable costs, and thus there is no basis to increase the composite rate. Furthermore, ProPAC concludes that without documented explanations for reported higher costs in hospital-based facilities, it cannot justify a differential update for these facilities.

ProPAC's analysis of the 1993 unaudited cost data shows that Medicare allowable costs for independent facilities are less than their payment rate. Since 1983, the number of independent facilities has continued to increase in response to growing patient demand, even though payment rates have remained constant. As noted by ProPAC, the margin between independent facilities' composite payment rates and their Medicare allowable costs continues to decrease. Because of this trend, we will closely monitor the costs of dialysis treatments as reported by facilities on their cost reports. Further, if Medicare's conditions of coverage are revised to include an adequacy of dialysis standard, we will examine the need to adjust composite payment rates. The current composite payment rates are mandated by statute.

To improve the quality of the cost report data and to address concerns about the cost report, we have revised the independent facilities' cost report, Form HCFA 265–94. The new cost report eliminates the allocation of the facility's overhead to the drug recombinant human erythropoietin (EPO). In addition, we are revising the independent cost reports edits. These edits would screen cost report data to ensure that data elements outside edit ranges are investigated by intermediaries.

B. Level of the Indirect Medical Education (IME) Adjustment to Prospective Payment System Operating Payments (Recommendation 7)

Recommendation: For FY 1996, the IME adjustment to prospective payment system operating payments should be reduced by 13 percent, from a 7.7 percent to a 6.7 percent increase for every 10 percent increment in teaching intensity. Ultimately, the IME adjustment should be reduced by about 40 percent, to a 4.5 percent increase for every 10 percent increment in teaching intensity.

Response: ProPAC's IME estimate of 4.5 percent represents a significant acceleration in the downward trend of its estimates in the last several years (5.7 percent in 1992, 5.4 percent in 1993, and 5.2 percent in 1994). Coupled with FY 1993 cost report data showing major teaching hospitals' Medicare operating margins (difference between payments and costs as a percentage of payments) rising to over 11 percent, this declining IME estimate adds to the argument that the current adjustment is too high. Legislation would be required to reduce the IME adjustment. However, savings proposals of this sort would only be appropriate in the context of health care reform.

C. Improving Outlier Payment Policy (Recommendation 8)

Recommendation: The Medicare statute should be amended so that the estimated cost of a case for determining outlier payment and the outlier payment amount are not adjusted to reflect a hospital's teaching and disproportionate share status. This change would make the outlier payment policy more effective in protecting hospitals from the risk of large losses on some cases.

Response: We agree that it may be appropriate not to adjust the estimated cost of a case to reflect a hospital's teaching and disproportionate share status. However, as we have stated in the past (see, for example, 59 FR 27754, September 1, 1994), we believe this change would be appropriate only in conjunction with statutory changes providing that IME and DSH payments would no longer reflect outlier payments. Currently, sections 1886(d)(5)(B) and (F) of the Act, respectively, specify that IME and DSH payments are calculated by applying a factor to the sum of DRG payments and outlier payments. Therefore, the more outlier payments a hospital receives, the more IME and DSH payments the hospital receives (if it qualifies for such payments).

We note that the current scheme leads to higher overall payments than might be intended, and this problem could be addressed by the changes discussed above. We set outlier payment policies for a Federal fiscal year so that estimated outlier payments equal 5.1 percent of estimated total payments based on DRGs. Under section 1886(d)(3)(B) of the Act, we reduce the standardized amounts by a corresponding factor. However, outlier payments affect the level of IME and DSH payments, and, generally, aggregate IME and DSH payments after accounting for outliers are greater (an estimated $80 million greater in FY 1996) than aggregate IME and DSH payments would be if there were no outliers (and no reduction to the standardized amounts to account for outliers). Currently, the statute does not provide for an adjustment to the standardized amounts to account for the increased IME and DSH payments.

D. Making DRG Payment Rates More Accurate (Recommendation 9)

Recommendation: The Secretary should implement, as soon as practicable, the DRG severity refinements developed by HCFA. At the same time, she should improve the accuracy of basic DRG payment rates and outlier payments by changing the methods used to calculate the DRG relative weights. The weights should be based on the national average of hospital-specific relative values for all cases in each DRG, rather than the national average standardized charge per case.

Response: In the May 27, 1994 proposed rule (59 FR 27716), we announced the availability of a paper we prepared that describes our preliminary severity DRG classification system and the analysis upon which our proposal was formulated. Based on the 100 comments we received on that paper, we are further analyzing and adjusting the severity DRG classifications. We are also examining the stability of the severity classifications over time. We agree with the Commission's judgment that adopting the severity DRGs would tend

to reduce current discrepancies between payments and costs for individual cases and thereby improve payment equity among hospitals. We therefore remain committed to implementing the severity DRG classification system as soon as possible. (See discussion in Section II.B of this preamble.)

We also agree with the Commission that basing DRG weights on standardized charges results in weights that are somewhat distorted as measures of the relative costliness of treating a typical case in each DRG. The Commission notes several sources of distortion, including the following: Systematic differences among hospitals in cost-to-charge ratios; variation in mark-ups for services across hospitals; variation among DRGs in the average mark-up implicit in case level charges; standardization factors that inaccurately represent cost differences among hospitals; and the absence of adjustments to account for factors such as variations in practice patterns and efficiency. We recognize that the hospital-specific relative value method of setting weights may reduce or eliminate distortions from these sources, and we are studying its effect on DRG weights and hospital payments.

The Commission also addresses two issues regarding current outlier financing policies: (1) How to account for outlier payments in setting a DRG weight that accurately reflects the relative costliness of treatment for typical cases; and (2) how to finance outlier payments so that the burden of treating such cases is spread fairly among all hospitals. We are studying these issues and look forward to working with ProPAC to find solutions.

Because the effects on DRG weights of implementing DRG severity refinements and changing the methods used to calculate DRG relative weights are interactive, we believe that appropriate changes should be adopted concurrently. However, as stated in the final rule published on September 1, 1992 (57 FR 39761) and in subsequent rules, as well as in this rule, we would not make significant changes to the DRG classification system unless we are able either to improve our ability to predict coding changes by validating in advance the impact that potential DRG changes may have on coding behavior, or to make methodological changes to prevent building the inflationary effects of the coding changes into future program payments.

E. Improving Annual Update Policies (Recommendation 10)

Recommendation: The Secretary should be given authority to adjust the standardized amounts if anticipated coding improvements would increase aggregate payments by more than 0.25 percent during the coming year. This adjustment should be separate from the annual update. It should be based on findings from empirical analysis of the new HCFA data base of reabstracted medical records. Once sufficient data are available, the Secretary should also make a correction if there is more than a 0.1 percentage point error in a previous adjustment.

Response: We agree with ProPAC that anticipated coding changes should be taken into account and that the most appropriate method for recognizing valid increases in case mix as a result of improved coding practices is within the framework of the standardized payment amount. We acknowledge, with ProPAC, that shifts in the mix of cases among DRGs may result from changes in practice patterns, new technology, or variations in the incidence of illness, as well as changes in the coding of diagnoses and procedures.

As ProPAC states, under section 1886(d)(4)(C) of the Act, we are required to make DRG reclassification and recalibration changes in a budget neutral manner. To meet this requirement, we normalize the DRG relative weights so that, for the discharges in the data base, the average DRG weights before and after reclassification and recalibration are equal. The recalibration of the DRG weights is accompanied by a budget neutrality adjustment to the standardized payment amount to ensure that estimated aggregate payments remain unchanged.

We share ProPAC's concern that introduction of any major modification to the DRG classification system will result in major shifts in the distribution of cases among the DRGs. Because the severity refinements to the DRGs would create many new DRGs with relatively high weights, there will be increased incentive to hospitals to report those secondary diagnoses that result in assignment to the higher weighted DRG. We agree with ProPAC that this is not inappropriate and is indeed anticipated. We further agree that we need to ensure that hospitals are fairly compensated for increases in costs that reflect real increases in the level of severity of illness of their patient population.

In order to protect the Medicare program from payment increases that are a consequence of improved coding practices that do not reflect a real increase in case mix, we have developed a methodology that would recalibrate the DRG relative weight to 1.0 each year, thus eliminating the normalization process and the concomitant inflationary adjustment to the DRG weights. This would prohibit upcoding and other coding improvements from having an impact on the DRG relative weight. To account for real case-mix increases, we have recommended an annual upward adjustment to the standardized amounts equal to the lesser of the total observed case-mix increase or 1.0 percent. Anticipated case-mix change due to upcoding would be accounted for through a prospective adjustment to the standardized amounts. This adjustment would be for one year at a time and would not be cumulative.

ProPAC recommends that an ongoing data base of reabstracted medical records be used to estimate the real and coding components of case-mix change and provide the basis for forecasting future coding changes. HCFA has recently implemented a record reabstracting process being conducted by two clinical data abstraction centers (CDACs) under contract with the Health Standards and Quality Bureau (HSQB). The CDACs will review a national random sample of 30,000 records per year from the National Case History file, gathered on a monthly basis. Registered Record Administrators (RRAs) and Associate Record Technicians (ARTs) will reabstract the medical record and perform complete record medical coding, which will be stored with the original coding.

We will evaluate the results of this reabstracting process before making a decision to base adjustments for anticipated coding changes only on this data base. Our estimate of an annual real case-mix increase of 1.0 percent is supported by past studies of case-mix change by the Rand Corporation. The most recent study by RAND, ''Has DRG Creep Crept Up? Decomposing the Case Mix Index Change Between 1987 and 1988'', by G.M. Carter, J.P. Newhouse and D.A. Relles, R–4098–kHCFA/ ProPAC (1991) uses medical records from those Federal fiscal years, using consistent standards, to determine real case-mix change.

As we pursue options and alternatives to payment adjustments to account for real case-mix increases, we will take into consideration ProPAC's recommendations to limit adjustments to those occasions in which coding changes would increase aggregate payments by more than 0.25 percent or when forecasts differ from observed, actual experience by more than 0.1 percent. We note, also, that we are considering a number of related modifications to the calculation of the

DRG relative weights that will have an impact on the prospective payment rates. (See response to ProPAC Recommendation 9, above.)

F. Controlling the Volume of Hospital Outpatient and Other Ambulatory Services (Recommendation 12)

Recommendation: The Secretary should conduct research on appropriate and effective volume control methods for services provided in hospital outpatient departments and other ambulatory settings. Even with a prospective payment system that relies on ambulatory patient groups or some other service classification scheme, Medicare spending for ambulatory services will continue to grow at a rapid pace because of increased volume. The Secretary should also address how the changing health care delivery system will affect utilization and site of care.

Response: ProPAC asserts that expenditures for ambulatory services provided in hospital outpatient departments will continue to grow rapidly even under an outpatient prospective payment system unless measures are taken to control volume of services. In our *Report to Congress—Medicare Hospital Outpatient Prospective Payment (March 17, 1995) (p. 21),* HCFA explicitly recognizes the need for such measures under an outpatient prospective payment system. If outpatient prospective payment is implemented, HCFA intends to investigate various methods to control the volume of ambulatory services in the hospital setting, as well as in other sites. These include bundling, ancillary packaging, multiple-procedure discounting, and expenditure targets (volume performance standards).

We fully concur with ProPAC's assessment of the difficulties involved in controlling the volume of ambulatory services. We recognize that because Medicare's payment methods differ by site of service, if payment and volume controls are imposed in one setting, utilization probably would shift to another. We would hope to ensure that payment encourages shifting of services to appropriate sites. We are aware of these difficulties and fully intend to address them if and when we implement an outpatient prospective payment system.

G. Changes to Medicare's Hospital Outpatient Payment Method (Recommendation 13)

Recommendation: Beneficiary coinsurance for hospital-provided outpatient services should be reduced from 20 percent of charges to 20 percent of payments. Further, until prospective payment for hospital outpatient services is implemented, the payment formula should be changed to fully reflect beneficiary coinsurance payments. The savings from correcting the payment formula should be used to offset program expenditure increases caused by reducing beneficiary liability.

Response: ProPAC notes that due to the way Medicare payments are calculated, beneficiaries pay more than 20 percent of total payments to hospitals for outpatient services. In addition, part of the payment formula for hospital outpatient services is based on the incorrect assumption that 20 percent of the prospective rate equals 20 percent of charges. This flaw in the payment formula prevents HCFA from fully benefiting from beneficiary coinsurance payments, resulting in a ''formula-driven overpayment'' to hospitals. ProPAC recommends the immediate reduction of beneficiaries' share of payments to 20 percent of the total payments, and the simultaneous correction of the payment formula. ProPAC also raises the possibility of phasing in a correction in the payment formula over the next several years.

HCFA has investigated this problem at considerable length, and has reported the results of this investigation in our Report to Congress—Medicare Hospital Outpatient Prospective Payment (March 17, 1995) (p. 24). Outpatient prospective payment would provide an excellent opportunity to reduce the beneficiary percentage of payments; in fact, contrary to ProPAC's assertion that the coinsurance problem should be addressed independently of the implementation of an outpatient prospective payment system, HCFA believes that the issues are inextricably linked. The Medicare payment amounts for most outpatient services furnished by hospitals are not known at the time the services are provided, because most hospital outpatient services are paid, at least in part, on a retrospective cost basis. Accordingly, the statute requires that coinsurance be based on 20 percent of charges for the majority of hospital outpatient services. However, the implementation of a prospective payment system would allow for the coinsurance issue to be addressed since payment would be known at the time of service. We do recognize, however, that the ''formula-driven overpayment'' problem can be corrected independently of the prospective payment system and beneficiary coinsurance.

In our report to Congress, we have presented several options for phasing down the beneficiary coinsurance to 20 percent, in conjunction with the outpatient prospective payment system. However, since implementation of any given option would require legislation, HCFA currently does not have the authority to modify the outpatient payment methodology as suggested.

VIII. Other Required Information

A. Paperwork Reduction Act

This proposed rule contains information collection requirements that are subject to review by the Office of Management and Budget under the authority of the Paperwork Reduction Act of 1980 (44 U.S.C. 3501 et seq.). Following is a discussion of each of these requirements:

- Under § 412.106(b)(3), for purposes of the DSH adjustment, a hospital's Medicare Part A/SSI percentage may be calculated based on its cost reporting period rather than the Federal fiscal year. (See section IV.E of the preamble.) Under current policy, a hospital must submit, in machine-readable format, data on its Medicare Part A patients for its cost reporting period. We are proposing to revise this requirement to provide that hospitals need only make a written request for the recalculation and need not submit the data. We estimate that the current burden associated with submitting the data is approximately 24 hours per request. Under the proposed revision, we estimate a burden of 1 hour per request. Based on an estimate of 12 requests per year, the total proposed burden would be 12 hours, in comparison to the current total burden of approximately 288 hours.
- Section 412.323 of this proposed rule contains new requirements concerning how a hospital may qualify for an adjustment to the Federal rate payment to account for its capital-related tax costs. (See section V.B of the preamble.) Currently, each Medicare-participating hospital is required to identify the amount of its capital-related tax costs on the hospital cost report (HCFA Form 2552–92). The reporting and recordkeeping burden associated with the hospital cost report is approved through August 31, 1996 under OMB No. 0938–0050.

Under proposed § 412.323, we are requiring that a hospital submit supporting documentation to its intermediary to verify the amount of capital-related tax costs reported on the hospital's cost report for FY 1992, or its first year of operation, if later. A hospital cannot qualify for an adjustment to the Federal rate payment unless it submits the required supporting documentation.

Based on our current cost reporting data, we estimate that the large majority

of hospitals will be essentially unaffected by the proposed documentation requirement because they have no relevant capital-related tax costs to report. For this group of almost 4,000 hospitals, simple verification of the lack of any such costs should take no more than 15 minutes per response, resulting in a one-time burden of no more than 1,000 hours. For the remaining group of approximately 1,300 hospitals with capital-related tax costs, we are unable to develop a quantifiable estimate of the burden associated with submitting the necessary documentation. The associated burden for an individual hospital will depend on the complexity of its property holdings and tax situation. We estimate that the burden could range from as little as 15 minutes per response to 8 hours, producing a possible burden ranging from 325 to 10,400 hours. However, we note that, as part of their cost reporting responsibilities, all hospitals are required to be able to furnish documentation of information reported on the hospital cost report. Thus, we believe that for most of these 1,300 hospitals, the associated burden should be much closer to the lower end of the estimated range.

We welcome comments on the information collection requirements associated with the provisions discussed above. These information collection and recordkeeping requirements are not effective until they have been approved by OMB. A notice will be published in the **Federal Register** when approval is obtained. Organizations and individuals desiring to submit comments on these information collection and recordkeeping requirements should direct them to the Office of Management and Budget, Human Resources and Housing Branch, Room 10235, New Executive Office Building, Washington, D.C., 20503, Attention: Allison Eydt, HCFA Desk Officer.

B. Requests for Data From the Public

In order to respond promptly to public requests for data related to the prospective payment system, we have set up a process under which commenters can gain access to the raw data on an expedited basis. Generally, the data are available in computer tape format or cartridges; however, some files are available on diskette. Data files are listed below with the cost of each. Anyone wishing to purchase data tapes, cartridges, or diskettes should submit a written request along with a company check or money order (payable to HCFA–PUF) to cover the cost, to the following address: Health Care Financing Administration, Public Use Files, Accounting Division, P.O. Box 7520, Baltimore, Maryland 21207–0520, (410) 597–5151.

1. Expanded Modified MEDPAR-Hospital (National)

The Medicare Provider Analysis and Review (MEDPAR) file contains records for 100 percent of Medicare beneficiaries using hospital inpatient services in the United States. (The file is a Federal fiscal year file which means discharges occurring October 1 through September 30.) The records are stripped of most data elements that will permit identification of beneficiaries. The hospital is identified by the 6-position Medicare billing number. The file is available to persons qualifying under the terms of the Notice of Proposed New Routine Uses for an Existing System of Records published in the **Federal Register** on December 24, 1984 (49 FR 49941), and amended by the July 2, 1985 notice (50 FR 27361). The national file consists of approximately 11 million records. Under the requirements of these notices, a data release must be signed by the purchaser before release of these data. For all files requiring a signed data release agreement, please write or call to obtain a blank agreement form before placing order. Two versions of this file are created each year. They support the following:

- Notice of Proposed Rulemaking (NPRM) published in the **Federal Register**, usually available by the end of May. This file is derived from the MedPAR file with a cutoff of 3 months after the end of the fiscal year (December file).
- Final Rule published in the **Federal Register**, usually available by the first week of September. This file is derived from the MedPAR file with a cutoff of 9 months after the end of the fiscal year (June file).

Media: Tape/Cartridge
File Cost: $3,415.00 per fiscal year
Periods Available: FY 1988 through FY 1994

2. Expanded Modified MedPAR-Hospital (State)

The State MedPAR file contains records for 100 percent of Medicare beneficiaries using hospital inpatient services in a particular State. The records are stripped of most data elements that will permit identification of beneficiaries. The hospital is identified by the 6-position Medicare billing number. The file is available to persons qualifying under the terms of the Notice of Proposed New Routine Uses for an Existing System of Records published in the December 24, 1984 **Federal Register** notice, and amended by the July 2, 1985 notice. This file is a subset of the Expanded Modified MedPAR-Hospital (National) as described above. Under the requirements of these notices, a data release must be signed by the purchaser before release of these data. Two versions of this file are created each year. They support the following:

- NPRM published in the **Federal Register**, usually available by the end of May. This file is derived from the MedPAR file with a cutoff of 3 months after the end of the fiscal year (December file).
- Final Rule published in the **Federal Register**, usually available by the first week of September. This file is derived from the MedPAR file with a cutoff of 9 months after the end of the fiscal year (June file).

Media: Tape/Cartridge
File Cost: $1,050.00 per State per year
Periods Available: FY 1988 through FY 1994

3. HCFA Hospital Wage Index Data File

This file is composed of four separate diskettes. Included are: (1) The hospital hours and salaries for FY 1992 used to create the proposed FY 1996 prospective payment system wage indexes; (2) a history of all wage indexes used since October 1, 1983; (3) a list of State and county codes used by SSA and FIPS (Federal Information Processing Standards), county name, and Metropolitan Statistical Area (MSA); and (4) a file of hospitals that were reclassified for the purpose of the FY 1996 wage index. Two versions of these files are created each year. They support the following:

- NPRM published in the **Federal Register**, usually by the end of May.
- Final Rule published in the **Federal Register**, usually by the first week of September.

Media: Diskette
File Cost: $500.00
Periods Available: FY 1996 PPS Update

We note that the files also are available individually as indicated below:

(1) HCFA Hospital Wage Index Survey Only usually available by the end of March for the NPRM and the middle of August for the final rule.)

(2) Urban and Rural Wage Indices Only.

(3) PPS SSA/FIPS MSA State and County Crosswalk Only (usually available by the end of March).

(4) Reclassified Hospitals by Provider Only.

Media: Diskette
File cost: $145.00 per file

4. PPS–IV to PPS–XI Minimum Data Sets

The Minimum Data Set contains cost, statistical, financial, and other information from the Medicare hospital cost report. The data set includes only the most current cost report (as submitted, final settled or reopened) submitted for a Medicare participating hospital by the Medicare Fiscal Intermediary to HCFA. This data set is updated at the end of each calendar quarter and is available on the last day of the following month.

MEDIA: TAPE/CARTRIDGE

	Periods beginning on or after	and before
PPS IV	10/01/86	10/01/87
PPS V	10/01/87	10/01/88
PPS VI	10/01/88	10/01/89
PPS VII	10/01/89	10/01/90
PPS VIII	10/01/90	10/01/91
PPS IX	10/01/91	10/01/92
PPS X	10/01/92	10/01/93
PPS XI	10/01/93	

(**Note:** The PPS XI Minimum Data Set covering 1994 will not be available until 07/31/95.)

File Cost: $715.00 per year

5. PPS–IX to PPS–XI Capital Data Set

The Capital Data Set contains selected data for capital-related costs, interest expense and related information and complete balance sheet data from the Medicare hospital cost report. The data set includes only the most current cost report (as submitted, final settled or reopened) submitted for a Medicare certified hospital by the Medicare fiscal intermediary to HCFA. This data set is updated at the end of each calendar quarter and is available on the last day of the following month.

MEDIA: TAPE/CARTRIDGE

	Periods beginning on or after	and before
PPS IX	10/01/91	10/01/92
PPS X	10/01/92	10/01/93
PPS XI	10/01/93	

(**Note:** The PPS XI Capital Data Set covering 1994 will not be available until 07/31/95.)

File Cost: $715.00 per year

6. Provider-Specific File

This file is a component of the PRICER program used in the fiscal intermediary's system to compute DRG payments for individual bills. The file contains records for all prospective payment system eligible hospitals, including hospitals in waiver States, and data elements used in the prospective payment system recalibration processes and related activities. Beginning with December 1988, the individual records were enlarged to include pass-through per diems and other elements.

Media: Tape/Cartridge
File Cost: $500.00 per file
Periods Available: FY 1987 through FY 1995 (December updates)

Media: Diskette
File Cost: $265.00
Periods Available: FY 1995 PPS Update

7. HCFA Medicare Case-Mix Index File

This file contains the Medicare case-mix index by provider number as published in each year's update of the Medicare hospital inpatient prospective payment system. The case-mix index is a measure of the costliness of cases treated by a hospital relative to the cost of the national average of all Medicare hospital cases, using DRG weights as a measure of relative costliness of cases. Two versions of this file are created each year. They support the following:

- NPRM published in the **Federal Register**, usually by the end of May.
- Final rule published in the **Federal Register**, usually by the first week of September.

Media: Diskette
Price: $145.00 per year
Periods Available: FY 1985 through FY 1994

8. Table 5 DRG File

This file contains a listing of DRGs, DRG narrative description, relative weight, geometric mean, length of stay, and day outlier trim points as published in the **Federal Register**. The hardcopy image has been copied to diskette. There are two versions of this file as published in the **Federal Register**:

a. NPRM, usually published by the end of May.

b. Final rule, usually published by the first week of September.

Media: Diskette
File Cost: $145.00
Periods Available: FY 1996 PPS Update

9. PPS Payment Impact File

This file contains data used to estimate payments under Medicare's hospital inpatient prospective payment systems for operating and capital-related costs. The data are taken from various sources, including the Provider-Specific File, the PPS–VII and PPS–VIII Minimum Data Sets, and prior impact files. The data set is abstracted from an internal file used for the impact analysis of the changes to the prospective payment systems published in the **Federal Register**. This file is available for release 1 month after the final rule is published in the **Federal Register**, usually during the first week of September.

Media: Diskette
File Cost: $145.00
Periods Available: FY 1995 PPS Update

10. AOR/BOR Tables

This file contains data used to develop the DRG relative weights. It contains mean, maximum, minimum, standard deviation and coefficient of variation statistics by DRG for length of stay and standardized charges. The BOR tables are ''Before Outliers Removed'' and the AOR is ''After Outliers Removed.'' (Outliers refers to statistical outliers, not payment outliers.) Two versions of this file are created each year. They support the following:

- NPRM published in the **Federal Register**, usually by the end of May.
- Final rule published in the **Federal Register**, usually by the first week of September.

Media: Diskette
File Cost: $145.00
Periods Available: FY 1996 PPS Update

11. HCFA FY 1992 Capital-Related Tax File

This file contains data used to develop a special property tax adjustment to the capital prospective payment system for capital-related costs. The dataset includes a preliminary hospital-specific add-on amount for all PPS hospitals. The dataset also contains the information used to propose an adjustment to the Federal rate so that the tax add-on is budget neutral. The proposed property tax adjustment provides special treatment to qualified hospitals who pay capital-related property taxes. The add-on was determined using base year tax costs per discharge attributable to Medicare. The data are taken from the FY 1992 Medicare hospital cost report and a special request for validation by the fiscal intermediaries.

Media: Diskette
File cost: $145.00
Period available: FY 1992 PPS Update

For further information concerning these data tapes, contact Mary R. White at (410) 597–3671.

In addition, certain other data, such as area wage data and data used to construct the Puerto Rico standardized amounts, are available in hard copy format. Commenters interested in examining hard copy data should contact John Davis at (410) 966–5654.

We realize that commenters may be interested in obtaining data other than

those we have discussed above. These commenters should direct their requests to John Davis at the number provided above.

Finally, in lieu of obtaining data through the mail, certain data may also be available for inspection at the central office of the Health Care Financing Administration in Baltimore, Maryland. Commenters interested in obtaining more information about this alternative for reviewing data should also contact John Davis.

C. Public Comments

Because of the large number of items of correspondence we normally receive on a proposed rule, we are not able to acknowledge or respond to them individually. However, in preparing the final rule, we will consider all comments concerning the provisions of this proposed rule that we receive by the date and time specified in the ''Dates'' section of this preamble and respond to those comments in the preamble to that rule. We emphasize that, given the statutory requirement under section 1886(e)(5) of the Act that our final rule for FY 1996 be published by September 1, 1995, we will consider only those comments that deal specifically with the matters discussed in this proposed rule.

List of Subjects

42 CFR Part 412

Administrative practice and procedure, Health facilities, Medicare, Puerto Rico, Reporting and recordkeeping requirements.

42 CFR Part 413

Health facilities, Kidney diseases, Medicare, Puerto Rico, Reporting and recordkeeping requirements.

42 CFR Part 424

Emergency medical services, Health facilities, Health professions, Medicare.

42 CFR Part 485

Grant programs-health, Health facilities, Medicaid, Medicare, Reporting and recordkeeping requirements.

42 CFR Part 489

Health facilities, Medicare, Reporting and recordkeeping requirements.

42 CFR chapter IV would be amended as set forth below:

A. Part 412 would be amended as follows:

PART 412—PROSPECTIVE PAYMENT SYSTEMS FOR INPATIENT HOSPITAL SERVICES

1. The authority citation for part 412 continues to read as follows:

Authority: Secs. 1102, 1815(e), 1820, 1871, and 1886 of the Social Security Act (42 U.S.C. 1302, 1395g(e), 1395i–4, 1395hh, and 1395ww).

Subpart A—General Provisions

2. Section 412.4 is amended as follows:

a. In the first sentence of paragraph (d)(1), the phrase ''is paid a per diem rate'' is revised to read ''is paid a graduated per diem rate''.

b. In paragraph (d)(1), a new sentence is added at the end of the paragraph.

The addition is to read as follows:

§ 412.4 Discharges and transfers.

* * * * *

(d) *Payment to a hospital transferring an inpatient to another hospital.* (1) * * * Payment is graduated by paying twice the per diem amount for the first day of the stay, and the per diem amount for each subsequent day, up to the limit as described in this paragraph.

* * * * *

Subpart B—Hospital Services Subject to and Excluded From the Prospective Payment Systems for Inpatient Operating Costs and Inpatient Capital-Related Costs

3. Section 412.23 is amended as follows:

a. Paragraphs (e)(2), (e)(3) introductory text, (e)(3)(i)(E), and (e)(3)(ii) are revised.

b. In paragraph (e)(4), the phrase ''in paragraphs (e)(3) of this section'' is revised to read ''in paragraph (e)(3) of this section''.

The revisions are to read as follows:

§ 412.23 Excluded hospitals: Classifications.

* * * * *

(e) *Long-term care hospitals.* * * *

(2) The hospital must have an average length of inpatient stay greater than 25 days—

(i) As computed by dividing the number of total inpatient days (less leave or pass days) by the number of total discharges for the hospital's most recent complete cost reporting period;

(ii) If a change in the hospital's average length of stay is indicated, as computed by the same method for the immediately preceding 6-month period; or

(iii) If a hospital has undergone a change of ownership (as described in § 489.18 of this chapter) at the start of a cost reporting period or at any time within the preceding 6 months, the hospital may be excluded from the prospective payment system as a long-term care hospital for a cost reporting period if, for the 6 months immediately preceding the start of the period (including time before the change of ownership), the hospital has the required average length of stay, continuously operated as a hospital, and continuously participated as a hospital in Medicare.

(3) Except as provided in paragraph (e)(4) of this section, for cost reporting periods beginning on or after October 1, 1994, a hospital that occupies space in a building also used by another hospital, or in one or more entire buildings located on the same campus as buildings used by another hospital, must meet the criteria in paragraph (e)(3)(i)(A) through (e)(3)(i)(D) of this section, and either the criterion in paragraph (e)(3)(i)(E) of this section or the criterion in paragraph (e)(3)(ii) of this section.

(i) * * *

(E) *Performance of basic hospital functions.* For the period of at least 6 months used to determine compliance with the length-of-stay criterion in paragraph (e)(2) of this section, the cost of the services that the hospital obtained under contracts or other agreements with the hospital occupying space in the same building or on the same campus, or with a third entity that controls both hospitals, is no more than 15 percent of the hospital's total inpatient operating costs, as defined in § 412.2(c).

(ii) For the period of at least 6 months used to determine compliance with the length-of-stay criterion in paragraph (e)(2) of this section, the hospital has an inpatient population of whom at least 75 percent were referred to the hospital from a source other than another hospital occupying space in the same building or on the same campus.

* * * * *

4. In § 412.29, the introductory text is republished, and paragraph (a) is revised to read as follows:

§ 412.29 Excluded rehabilitation units: Additional requirements.

In order to be excluded from the prospective payment systems, a rehabilitation unit must meet the following requirements:

(a) Have met either the requirements for—

(1) New units under § 412.30(a); or

(2) Converted units under § 412.30(b).

* * * * *

5. Section 412.30 is amended as follows:

a. Paragraph (a) is revised.

b. Paragraphs (b) and (c) are redesignated as paragraphs (c) and (d).

c. A new paragraph (b) is added.

d. Redesignated paragraph (c) is revised.

e. In redesignated paragraph (d), the phrase ''under paragraph (b) of this section,'' is revised to read ''under paragraph (c) of this section,''.

The revisions and addition are to read as follows:

§ 412.30 Exclusion of new rehabilitation units and expansion of units already excluded.

(a) *New units.* (1) A hospital unit is considered a new unit if the hospital—

(i) Has not previously sought exclusion for any rehabilitation unit; and

(ii) Has obtained approval, under State licensure and Medicare certification, for an increase in its hospital bed capacity that is greater than 50 percent of the number of beds in the unit.

(2) A hospital that seeks exclusion of a new rehabilitation unit may provide a written certification that the inpatient population the hospital intends the unit to serve meets the requirements of § 412.23(b)(2) instead of showing that the unit has treated such a population during the hospital's most recent cost reporting period.

(3) The written certification described in paragraph (a)(2) of this section is effective for the first full cost reporting period during which the unit is used to provide hospital inpatient care. If the hospital has not previously participated in the Medicare program as a hospital, the written certification also is effective for any cost reporting period of not less than 1 month and not more than 11 months occurring between the date the hospital began participating in Medicare and the start of the hospital's regular 12-month cost reporting period.

(4) A hospital that has undergone a change of ownership or leasing as defined in § 489.18 of this chapter is not considered to have participated previously in the Medicare program.

(b) *Converted units.* A hospital unit is considered a converted unit if it does not qualify as a new unit under paragraph (a) of this section. A converted unit must have treated, for the hospital's most recent 12-month cost reporting period, an inpatient population of which at least 75 percent required intensive rehabilitation services for the treatment of one or more conditions listed under § 412.23(b)(2).

(c) *Expansion of excluded rehabilitation units.*

(1) *New bed capacity.* The beds that a hospital seeks to add to its excluded rehabilitation unit are considered new beds only if—

(i) The hospital's State-licensed and Medicare-certified bed capacity increases at the start of the cost reporting period for which the hospital seeks to increase the size of its excluded rehabilitation unit, or at any time after the start of the preceding cost reporting period; and

(ii) The number of beds the hospital seeks to add to its excluded rehabilitation unit is greater than 50 percent of the number of beds by which the hospital's State licensed and Medicare certified bed capacity increased under paragraph (c)(1)(i) of this section.

(2) *Conversion of existing bed capacity.*

(i) Bed capacity is considered to be existing bed capacity if it does not meet the definition of new bed capacity under paragraph (c)(1) of this section.

(ii) A hospital may increase the size of its excluded rehabilitation unit through conversion of existing bed capacity only if it shows that, for all of the hospital's most recent cost reporting period of at least 12 months, the beds have been used to treat an inpatient population meeting the requirements of § 412.23(b)(2).

* * * * *

Subpart D—Basic Methodology for Determining Prospective Payment Federal Rates for Inpatient Operating Costs

6. In § 412.63, a new paragraph (s)(5) is added to read as follows:

§ 412.63 Federal rates for inpatient operating costs for fiscal years after Federal fiscal year 1984.

* * * * *

(s) * * *

(5) If a judicial decision reverses a HCFA denial of a hospital's wage data revision request, HCFA pays the hospital by applying a revised wage index that reflects the revised wage data as if HCFA's decision had been favorable rather than unfavorable.

Subpart G—Special Treatment of Certain Facilities Under the Prospective Payment System for Inpatient Operating Costs

§ 412.92 [Amended]

7. In paragraph (b)(5) of § 412.92, remove the phrase ''under § 413.30(e)(1) of this chapter'', wherever it appears.

8. In § 412.105, paragraph (b) is revised to read as follows:

§ 412.105 Special treatment: Hospitals that incur indirect costs for graduate medical education programs.

* * * * *

(b) *Determination of number of beds.* For purposes of this section, the number of beds in a hospital is determined by counting the number of available bed days during the cost reporting period, not including beds in the healthy newborn nursery, custodial care beds, or beds in excluded distinct part hospital units, and dividing that number by the number of days in the cost reporting period.

* * * * *

9. In § 412.106, paragraph (b)(3) is revised to read as follows:

§ 412.106 Special treatment: Hospitals that serve a disproportionate share of low-income patients.

* * * * *

(b) * * *

(3) *First computation: Cost reporting period.* If a hospital prefers that HCFA use its cost reporting period instead of the Federal fiscal year, it must furnish to HCFA, through its intermediary, a written request including the hospital's name, provider number, and cost reporting period end date. This exception will be performed once per hospital per cost reporting period, and the resulting percentage becomes the hospital's official Medicare Part A/SSI percentage for that period.

* * * * *

10. Section 412.109 is amended as follows:

a. Paragraph (a) is revised.

b. Paragraphs (b) through (e) are redesignated as paragraphs (c) through (f).

c. A new paragraph (b) is added.

d. Redesignated paragraphs (c)(1), (c)(2)(ii), (d) introductory text, and (d)(1) are revised.

e. The paragraph heading of redesignated paragraph (e) and redesignated paragraph (e)(1) are revised.

The revisions and addition are to read as follows:

§ 412.109 Special treatment: Essential access community hospitals (EACHs).

(a) *General rule.* For payment purposes, HCFA treats as a sole community hospital any hospital that is located in a rural area as described in paragraph (b) of this section and that HCFA designates as an EACH under the criteria in paragraph (c) of this section. The payment methodology for sole community hospitals is set forth at § 412.92(d).

(b) *Location in a rural area.* For purposes of this section, a hospital is located in a rural area if it—

(1) Is located outside any area that is a Metropolitan Statistical Area as defined by the Office of Management and Budget or that has been recognized as urban under § 412.62;

(2) Is not deemed to be located in an urban area under § 412.63;

(3) Is not classified as an urban hospital for purposes of the standardized payment amount by HCFA or the Medicare Geographic Classification Review Board; or

(4) Is not located in a rural county that has been redesignated to an adjacent urban area under § 412.232.

(c) *Criteria for HCFA designation.* (1) HCFA designates a hospital as an EACH if the hospital is located in a State that has received a grant under section 1820(a)(1) of the Act or in an adjacent State and is designated as an EACH by the State that has received the grant.

* * * * *

(2) * * *

(ii) Is not eligible for State designation solely because the hospital is located in a rural area, has fewer than 75 beds and is located 35 miles or less from any other hospital; and

* * * * *

(d) *Criteria for State designation.* A State that has received a grant under section 1820(a)(1) of the Act may designate as an EACH any hospital in the State or in an adjoining State that meets the criteria of this paragraph (d).

(1) *Geographic location.* The hospital meets one of the following requirements:

(i) If it is located in a rural area as described in paragraph (b) of this section, the hospital is located more than 35 miles from any hospital that either has been designated as an EACH, or has been classified as a rural referral center under § 412.96.

(ii) The hospital meets other criteria relating to geographic location, imposed by the State with HCFA's approval.

* * * * *

(e) *Adjustment to the hospital-specific rate for rural EACH's experiencing increased costs*—(1) *General rule.* HCFA increases the applicable hospital-specific rate of an EACH that it treats as a sole community hospital if, during a cost reporting period, the hospital experiences an increase in its Medicare inpatient operating costs per discharge that is directly attributable to activities related to its membership in a rural health network.

* * * * *

Subpart H—Payments to Hospitals Under the Prospective Payment Systems

§ 412.130 [Amended]

11. In paragraph (a)(3) of § 412.130, remove the reference ''§ 412.30(b)'' wherever it appears and add, in its place, the reference ''§ 412.30(c)''.

Subpart L—The Medicare Geographic Classification Review Board

12. In § 412.230, paragraph (a)(1) is revised and a new paragraph (a)(5) is added to read as follows:

§ 412.230 Criteria for an individual hospital seeking redesignation to another rural area or an urban area.

(a) *General*—(1) *Purpose.* Except as provided in paragraph (a)(5) of this section, an individual hospital may be redesignated from a rural area to an urban area, from a rural area to another rural area, or from an urban area to another urban area for the purposes of using the other area's standardized amount for inpatient operating costs, wage index value, or both.

* * * * *

(5) *Limitations on redesignation.* The following limitations apply to redesignation:

(i) An individual hospital may not be redesignated to another area for purposes of the wage index if the pre-reclassified average hourly wage for that area is lower than the pre-reclassified average hourly wage for the area in which the hospital is located.

(ii) A hospital may not be redesignated for purposes of the standardized amount if the area to which the hospital seeks redesignation does not have a higher standardized amount than the standardized amount the hospital currently receives.

(iii) A hospital may not be redesignated to more than one area.

* * * * *

13. In § 412.232, a new paragraph (a)(4) is added to read as follows:

§ 412.232 Criteria for all hospitals in a rural county seeking urban redesignation.

(a) * * *

(4) The hospitals may be redesignated only if one of the following conditions is met:

(i) The pre-reclassified average hourly wage for the area to which they seek redesignation is higher than the pre-reclassified average hourly wage for the area in which they are currently located.

(ii) The standardized amount for the area to which they seek redesignation is higher than the standardized amount for the area in which they are located.

* * * * *

14. In § 412.234, a new paragraph (a)(4) is added to read as follows:

§ 412.234 Criteria for all hospitals in an urban county seeking redesignation to another urban area.

(a) * * *

(4) The hospitals may be redesignated only if one of the following conditions is met.

(i) The pre-reclassified average hourly wage for the area to which they seek redesignation is higher than the pre-reclassified average hourly wage for the area in which they are currently located.

(ii) The standardized amount for the area to which they seek redesignation is higher than the standardized amount for the area in which they are currently located.

* * * * *

15. Section 412.266 is revised to read as follows:

§ 412.266 Availability of wage data.

A hospital may obtain the average hourly wage data necessary to prepare its application to the MGCRB from **Federal Register** documents published in accordance with the provisions of § 412.8(b).

Subpart M—Prospective Payment System for Inpatient Hospital Capital Costs

16. In § 412.308, new paragraphs (b)(3) and (b)(4) are added and paragraph (c)(1)(ii) is revised to read as follows:

§ 412.308 Determining and updating the Federal rate.

* * * * *

(b) * * *

(3) Effective FY 1996, the standard Federal rate used to determine the Federal rate each year under paragraph (c) of this section is reduced by 0.28 percent to account for the effect of the revised policy for payment of transfers under § 412.4(d).

(4) Effective FY 1996, the standard Federal rate used to determine the Federal rate each year under paragraph (c) of this section is reduced by 1.14 percent to account for capital-related tax costs included in the original rate computation.

(c) * * *

(1) * * *

(ii) *Effective FY 1996.* Effective FY 1996, the standard Federal rate is updated based on an analytical framework. The framework includes a capital input price index, which measures the annual change in the prices associated with capital-related costs during the year. HCFA adjusts the capital input price index rate of change

to take into account forecast errors, changes in the case mix index, the effect of changes to DRG classification and relative weights, and allowable changes in the intensity of hospital services. HCFA may also adjust the annual rate of change to take into account the efficiency and cost-effectiveness of capital resources and other factors as appropriate.

* * * * *

17. In § 412.312, a new paragraph (b)(5) is added to read as follows:

§ 412.312 Payment based on the Federal rate.

* * * * *

(b) * * *

(5) An additional payment is made, as provided in § 412.323, to account for the capital-related tax costs of qualifying hospitals.

* * * * *

18. A new § 412.323 is added under the undesignated heading of subpart M that continues to read: **Basic Methodology for Determining the Federal Rate for Capital-Related Costs.**

The new section reads as follows:

§ 412.323 Special treatment: Capital-related tax costs.

(a) *Definition.* As used in this section, the term capital-related tax costs means the costs for taxes on land or depreciable assets owned by a hospital (or a related organization consistent with the terms of § 413.17 of this chapter) and used for patient care. Taxes assessed on some basis other than valuation of land or depreciable assets used for patient care, or on assets not owned by the hospital, are not considered capital-related tax costs.

(b) *Effective date.* Effective for discharges beginning on or after October 1, 1995, HCFA provides an adjustment to the Federal rate payment for each eligible hospital to account for capital-related tax costs.

(c) *Eligibility*—(1) *General requirement for initial eligibility.* If a hospital paid capital-related taxes during the first cost reporting period beginning on or after October 1, 1991, and meets the requirements for verifying those costs under paragraph (d) of this section, the hospital is eligible for an adjustment subject to paragraph (c)(3) of this section.

(2) *Special rule for initial eligibility of a hospital that began operation after FY 1992.* If a hospital began operation after Federal FY 1992, and is subject to capital-related taxes, the hospital is eligible for an adjustment provided that it meets the special requirement for verifying those costs under paragraph (d) of this section.

(3) *Continued basis for eligibility.* A hospital that meets the requirements for initial eligibility remains eligible for a tax adjustment as long as it continues to pay capital-related taxes. The intermediary may require the hospital to submit proof of continued eligibility for the adjustment.

(d) *Verification of eligibility.* (1) A hospital that meets the general requirement for initial eligibility must provide the intermediary with complete documentation of its capital-related tax costs during the hospital's first cost reporting period beginning on or after October 1, 1991.

(2) A hospital that meets the special requirements for initial eligibility under paragraph (c)(2) of this section must provide the intermediary with complete documentation of its tax costs during the first year in which it pays such costs.

(e) *Methodology.* (1) The intermediary determines the amount of a hospital's total allowable capital-related tax costs during the first cost reporting period beginning on or after October 1, 1991, on the basis of the documentation submitted by the hospital to meet the eligibility requirements under paragraph (c) of this section. The intermediary reports that amount to HCFA.

(2) HCFA determines each hospital's FY 1992 Medicare inpatient capital-related tax cost per discharge by applying, to the amount determined under paragraph (e)(1) of this section, the ratio of the hospital's Medicare inpatient capital-related costs to total inpatient capital-related costs, and then dividing the result by the number of Medicare inpatient discharges during that cost reporting period.

(3) HCFA updates the amount in paragraph (e)(2) of this section by a factor that represents the total amount of the updates to the Federal rate for FY 1993 through FY 1996 under § 412.308(c)(1).

(4) For discharges occurring on or after October 1, 1995, the intermediary adds the amount determined under paragraph (e)(3) of this section to the Federal rate portion of each eligible hospital's payment, before the application of the appropriate Federal rate payment percentage under § 412.340 or § 412.344.

(5) For discharges occurring on or after October 1, 1998, HCFA updates the prior year tax per discharge amount by an analytical framework that accounts for changes in the factors that determine capital-related costs.

(6) For a hospital that qualifies for an adjustment under the special rule in paragraph (c)(2) of this section, determination of the payment amount follows the following steps:

(i) The intermediary determines the amount of a hospital's total allowable capital-related tax costs during the first cost reporting for which the hospital is subject to capital-related taxes, on the basis of the documentation submitted by the hospital to meet the eligibility requirements under paragraph (c) of this section. The intermediary reports that amount to HCFA.

(ii) HCFA determines each hospital's first year Medicare inpatient capital-related tax costs per discharge by applying, to the amount determined under paragraph (e)(6)(i) of this section, the ratio of the hospital's Medicare inpatient capital-related costs to total capital costs, and by dividing the result by the number of Medicare inpatient discharges during that cost reporting period.

(iii) For discharges occurring on or after October 1, 1995, HCFA updates the amount under paragraph (e)(6)(ii) of this section by a factor that represents the total amount, if any, of the updates to the Federal rate from the first year in which the hospital paid capital-related taxes to FY 1996, under § 412.308(c)(1).

(iv) The intermediary adds the amount determined under paragraph (e)(6)(iii) of this section to the Federal rate portion of each eligible hospital's payment, before the application of the appropriate Federal rate payment percentage under § 412.340 or § 412.344.

(v) For discharges occurring on or after October 1, 1998, HCFA updates the prior year tax per discharge amount by an analytical framework that accounts for changes in the factors that determine capital-related costs.

19. In § 412.328, a new paragraph (e)(4) is added to read as follows:

§ 412.328 Determining and updating the hospital-specific rate.

* * * * *

(e) * * *

(4) Effective FY 1996, the intermediary reduces the updated amount determined in paragraph (d) of this section by 0.28 percent to account for the effect of the revised policy for payment of transfers under § 412.4(d).

* * * * *

B. Part 413 would be amended as follows:

PART 413—PRINCIPLES OF REASONABLE COST REIMBURSEMENT; PAYMENT FOR END-STAGE RENAL DISEASE SERVICES

1. The authority citation for part 413 is revised to read as follows:

Authority: Secs. 1102, 1122, 1814(b), 1815, 1833 (a), (i), and (n), 1861(v), 1871, 1881, 1883, and 1886 of the Social Security Act (42 U.S.C. 1302, 1320a–1, 1395f(b), 1395g, 1395l (a), (i), and (n), 1395x(v), 1395hh, 1395rr, 1395tt, and 1395ww).

Subpart C—Limits on Cost Reimbursement

2. Section 413.30 is amended as follows:

a. Paragraph (e) is revised.

b. In paragraph (f) introductory text, the first sentence is revised.

c. Paragraphs (f)(5), (f)(6), (f)(7), and (f)(9) are removed and paragraph (f)(8) is redesignated as paragraph (f)(5).

The revisions are to read as follows:

§ 413.30 Limitations on reimbursable costs.

* * * * *

(e) *Exemptions.* Exemptions from the limits imposed under this section may be granted to a new provider. A new provider is a provider of inpatient services that has operated as the type of provider (or the equivalent) for which it is certified for Medicare, under present and previous ownership, for less than three full years. An exemption granted under this paragraph expires at the end of the provider's first cost reporting period beginning at least two years after the provider accepts its first patient.

(f) *Exceptions.* Limits established under this section may be adjusted upward for a provider under the circumstances specified in paragraphs (f)(1) through (f)(5) of this section. * * *

* * * * *

§ 413.35 [Amended]

3. In paragraph (b)(2) of § 413.35, remove the reference ''§ 413.30(e)(2)'' wherever it appears in the paragraph and add, in its place, the reference ''§ 413.30(e)''.

4. Section 413.40 is amended as follows:

a. In § 413.40(c)(2), remove the phrase ''during the 3 days'' wherever it appears in the paragraph and add, in its place, the phrase ''on the calendar day''.

b. Paragraph (e)(1) is revised.

c. A new sentence is added at the end of paragraph (g)(1).

The revision and addition are to read as follows:

§ 413.40 Ceiling on the rate of increase in hospital inpatient costs.

* * * * *

(e) *Hospital requests regarding adjustments to the payment allowed under the rate-of-increase ceiling*—(1) *Timing of application.* A hospital may request an adjustment to the rate-of-increase ceiling imposed under this section. The hospital's request must be received by the hospital's fiscal intermediary no later than 180 days after the date on the intermediary's initial notice of amount of program reimbursement (NPR) for the cost reporting period for which the hospital requests an adjustment.

* * * * *

(g) * * *

(1) * * * The amount of payment made to a hospital after a TEFRA adjustment may not exceed the difference between the hospital's operating costs and the payment previously allowed.

* * * * *

Subpart E—Payment to Providers

5. In § 413.70, the first sentence of paragraph (b)(2)(i) is revised to read as follows:

§ 413.70 Payment for services of an RPCH.

* * * * *

(b) * * *

(2) * * * (i) *RPCH services.* Payment under this method for outpatient RPCH services is equal to the amounts described in section 1833(a)(2)(B) of the Act (which describes amounts paid for hospital outpatient services) and subject to the applicable principles of cost reimbursement in this part and in part 405, subpart D of this chapter, except for the principle of the lesser of costs or charges in § 413.13. * * *

* * * * *

C. Part 424 would be amended as follows:

PART 424—CONDITIONS FOR MEDICARE PAYMENT

1. The authority citation for part 424 continues to read as follows:

Authority: Secs. 216(j), 1102, 1814, 1815(c), 1835, 1842 (b) and (p), 1861, 1866(d), 1870 (e) and (f), 1871, and 1872 of the Social Security Act (42 U.S.C. 416(j), 1302, 1395f, 1395g(c), 1395n, 1395u (b) and (p), 1395x, 1395cc(d), 1395gg (e) and (f), 1395hh, and 1395ii).

Subpart B—Physician Certification Requirements

2. In § 424.15, paragraph (a) is revised to read as follows:

§ 424.15 Requirements for inpatient RPCH services.

(a) *Content of certification.* Medicare part A pays for inpatient RPCH services only if a physician certifies that the individual may reasonably be expected to be discharged or transferred to a hospital within 72 hours after admission to the RPCH.

* * * * *

D. Part 485 would be amended as follows:

PART 485—CONDITIONS OF PARTICIPATION: SPECIALIZED PROVIDERS

1. The authority citation for part 485 continues to read as follows:

Authority: Secs. 1102 and 1871 of the Social Security Act (42 U.S.C. 1302 and 1395hh).

Subpart F—Conditions of Participation: Rural Primary Care Hospitals (RPCHs)

§ 485.603 [Amended]

2. In paragraph (a)(2)(i) of § 485.603, remove the reference ''§ 412.109(c)'' wherever it appears in the paragraph and add, in its place, the reference ''§ 412.109(d)''.

3. In § 485.606, paragraphs (a)(1), (b)(1), (b)(3), the paragraph heading of paragraph (c), (c)(1) introductory text, (c)(1)(i), (c)(2) introductory text, and (c)(2)(ii) are revised to read as follows:

§ 485.606 Designation of RPCHs.

(a) *Criteria for State designation*—(1) A State that has received a grant under section 1820(a)(1) of the Act may designate as an RPCH any hospital that—

(i) Is located in the State that has received the grant, or is located in an adjoining State and is a member of a rural health network that also includes one or more facilities located in the State that has received the grant;

(ii) Meets the RPCH conditions of participation in this subpart F; and

(iii) Applies to the State that has received the grant for designation as an RPCH.

* * * * *

(b) *Criteria for HCFA designation*—(1) HCFA designates a hospital as an RPCH if the hospital is designated as an RPCH by the State in which it is located or by an adjoining State that has received a grant.

* * * * *

(3) HCFA may also designate not more than 15 hospitals as RPCHs if the hospitals are not located in States that have received grants under section 1820(a)(1) of the Act and meet the requirements of paragraph (c)(1) of this section.

(c) *Special rule: Hospitals not designated by a State as RPCHs*—(1) HCFA may designate not more than 15 hospitals as RPCHs under this paragraph (c)(1). These hospitals must be located in a State that has not received a grant under section 1820(a)(1) of the Act, must not have

been designated as RPCHs by a State that has received a grant under paragraph (a)(1) of this section, and must meet the requirements with regard to location, participation in the Medicare program, and emergency services as defined in §§ 485.610, 485.612, and 485.618, respectively. In designating a hospital as an RPCH under this paragraph (c)(1), HCFA—

(i) Gives preference to a hospital that has entered into an agreement with a rural health network as defined in § 485.603 that is located in a State that has received a grant under section 1820(a)(1) of the Act; and

* * * * *

(2) HCFA may designate a hospital as an RPCH if the hospital is located in a State that has received a grant under section 1820(a)(1) of the Act and is not eligible for State designation under paragraph (a) of this section solely because the hospital—

* * * * *

(ii) Has more than six inpatient beds or does not maintain an average length of stay for inpatients not greater than 72 hours for each 12-month cost reporting period, excluding periods of stays that exceeded 72 hours because transfer was precluded because of inclement weather or other emergency conditions, as described in § 485.620; or

* * * * *

4. Section 485.614 is revised to read as follows:

§ 485.614 Condition of participation: Termination of inpatient care services.

(a) *General rule.* The hospital has ceased providing inpatient hospital care or has agreed to cease providing inpatient hospital care upon approval of its application for designation as an RPCH except to the extent permitted under paragraph (b) of this section.

(b) *Limitations on inpatient care*—(1) If the RPCH does not have a swing-bed agreement under § 485.645, it provides not more than six inpatient beds for providing inpatient RPCH care to patients, but only if—

(i) The patient requires stabilization before discharge or transfer to a hospital;

(ii) The patient's attending physician certifies that the patient may reasonably be expected to be discharged or transferred to a hospital within 72 hours of admission to the facility; and

(iii) The RPCH complies with the limitation on inpatient surgery set forth in paragraph (b)(3) of this section.

(2) If the RPCH has a swing-bed agreement under § 485.645, it provides inpatient RPCH care as described under paragraph (b)(1) of this section and, under the swing-bed agreement, provides posthospital SNF care.

(3) The RPCH does not provide any inpatient hospital services consisting of surgery or any other service requiring the use of general anesthesia (other than surgical procedures specified by HCFA under § 416.65 of this chapter), unless the attending physician certifies that the risk associated with transferring the patient to a hospital for such services outweighs the benefits of transferring the patient to a hospital for such services.

(c) *Exception for RPCHs designated by HCFA.* If an RPCH is designated by HCFA under the specific criteria in § 485.606(c), the RPCH is not subject to the requirements in this section.

5. In § 485.620, paragraph (b) is revised to read as follows:

§ 485.620 Condition of participation: Number of beds and length of stay.

* * * * *

(b) *Standard: Length of stay.* The RPCH maintains an average length of stay for inpatients that is not greater than 72 hours for each 12-month cost reporting period. In determining the average length of stay, periods of stay of inpatients in excess of 72 hours are not taken into account to the extent such periods exceed 72 hours because transfer to a hospital is precluded because of inclement weather or other emergency conditions.

6. A new § 485.639 is added to read as follows:

§ 485.639 Condition of participation: Surgical services.

Surgical procedures must be performed in a safe manner by qualified practitioners who have been granted clinical privileges by the governing body of the RPCH in accordance with the designation requirements under paragraph (a) of this section.

(a) *Designation of qualified practitioners.* The RPCH designates the practitioners who are allowed to perform surgery for RPCH patients, in accordance with its approved policies and procedures, and with State scope of practice laws. Surgery is performed only by—

(1) A doctor of medicine or osteopathy, including an osteopathic practitioner recognized under section 1101(a)(7) of the Act;

(2) A doctor of dental surgery or dental medicine; or

(3) A doctor of podiatric medicine.

(b) *Anesthetic risk and evaluation.* A qualified practitioner, as described in paragraph (a) of this section, must examine the patient immediately before surgery to evaluate the risk of anesthesia and of the procedure to be performed. Before discharge from the RPCH, each patient must be evaluated for proper anesthesia recovery by a qualified practitioner as described in paragraph (a) of this section.

(c) *Administration of anesthesia.* The RPCH designates the person who is allowed to administer anesthesia to RPCH patients in accordance with its approved policies and procedures and with State scope of practice laws.

(1) Anesthetics must be administered only by—

(i) A qualified anesthesiologist;

(ii) A doctor of medicine or osteopathy other than an anesthesiologist, including an osteopathic practitioner recognized under section 1101(a)(7) of the Act;

(iii) A doctor of dental surgery or dental medicine;

(iv) A doctor of podiatric medicine;

(v) A certified registered nurse anesthetist, as defined in § 410.69(b) of this chapter;

(vi) An anesthesiologist's assistant, as defined in § 410.69(b) of this chapter; or

(vii) A supervised trainee in an approved educational program, as described in §§ 413.85 or 413.86 of this chapter.

(2) In those cases in which a certified registered nurse anesthetist administers the anesthesia, the anesthetist must be under the supervision of the operating practitioner. An anesthesiologist's assistant who administers anesthesia must be under the supervision of an anesthesiologist.

(d) *Discharge.* All patients are discharged in the company of a responsible adult, except those exempted by the practitioner who performed the surgical procedure.

E. Part 489 would be amended as follows:

PART 489—PROVIDER AGREEMENTS AND SUPPLIER APPROVAL

1. The authority citation for part 489 continues to read as follows:

Authority: Secs. 1102, 1819, 1861, 1864(m), 1866, and 1871 of the Social Security Act (42 U.S.C. 1302, 1395i–3, 1395x, 1395aa(m), 1395cc, and 1395hh).

Subpart E—Termination of Agreement and Reinstatement After Termination

2. In § 489.53, a new paragraph (a)(14) is added to read as follows:

§ 489.53 Termination by HCFA.

(a) * * *

(14) In the case of a rural primary care hospital as defined in part 485, subpart F of this chapter, the rural primary care hospital maintains an average length of

stay for inpatients in its most recent 12-month cost reporting period that is in excess of 72 hours. In determining the length of stay of a rural primary care hospital for purposes of this paragraph, HCFA does not take into account periods of stay in excess of 72 hours that occurred because transfer to a hospital was precluded because of inclement weather or other emergency conditions.

* * * * *

(Catalog of Federal Domestic Assistance Program No. 93.773, Medicare—Hospital Insurance; and Program No. 93.774, Medicare—Supplementary Medical Insurance Program)

Dated: May 12, 1995.

Bruce C. Vladeck,

Administrator, Health Care Financing Administration.

Dated: May 23, 1995.

Donna E. Shalala,

Secretary.

[**Editorial Note:** The following addendum and appendixes will not appear in the Code of Federal Regulations.]

Addendum—Proposed Schedule of Standardized Amounts Effective With Discharges On or After October 1, 1995 and Update Factors and Rate-of-Increase Percentages Effective With Cost Reporting Periods Beginning On or After October 1, 1995

I. Summary and Background

In this addendum, we are setting forth the proposed amounts and factors for determining prospective payment rates for Medicare inpatient operating costs and Medicare inpatient capital-related costs. We are also setting forth new proposed rate-of-increase percentages for updating the target amounts for hospitals and hospital units excluded from the prospective payment system.

For discharges occurring on or after October 1, 1995, except for sole community hospitals and hospitals located in Puerto Rico, each hospital's payment per discharge under the prospective payment system will be based on 100 percent of the Federal national rate.

Sole community hospitals are paid based on whichever of the following rates yields the greatest aggregate payment: the Federal national rate, the updated hospital-specific rate based on FY 1982 cost per discharge, or the updated hospital-specific rate based on FY 1987 cost per discharge. For hospitals in Puerto Rico, the payment per discharge is based on the sum of 75 percent of a Puerto Rico rate and 25 percent of a national rate (section 1886(d)(9)(A) of the Act).

As discussed below in section II, we are proposing to make changes in the determination of the prospective payment rates for Medicare inpatient operating costs. The changes, to be applied prospectively, would affect the calculation of the Federal rates. In section III, we discuss our proposed changes for determining the prospective payment rates for Medicare inpatient capital-related costs. Section IV sets forth our proposed changes for determining the rate-of-increase limits for hospitals excluded from the prospective payment system. The tables to which we refer in the preamble to the proposed rule are presented at the end of this addendum in section V.

II. Proposed Changes to Prospective Payment Rates For Inpatient Operating Costs for FY 1996

The basic methodology for determining prospective payment rates for inpatient operating costs is set forth at § 412.63 for hospitals located outside of Puerto Rico. The basic methodology for determining the prospective payment rates for inpatient operating costs for hospitals located in Puerto Rico is set forth at §§ 412.210 and 412.212. Below, we discuss the manner in which we are changing some of the factors used for determining the prospective payment rates. The Federal and Puerto Rico rate changes, once issued as final, will be effective with discharges occurring on or after October 1, 1995. As required by section 1886(d)(4)(C) of the Act, we must also adjust the DRG classifications and weighting factors for discharges in FY 1996.

In summary, the proposed standardized amounts set forth in Tables 1a, 1b, and 1c of section V of this addendum reflect—

- Updates of 1.5 percent for all areas (that is, the market basket percentage increase of 3.5 percent minus 2.0 percentage points);
- An adjustment to ensure budget neutrality as provided for in sections 1886(d)(4)(C)(iii) and (d)(3)(E) of the Act by applying new budget neutrality adjustment factors to the large urban and other standardized amounts;
- An adjustment to ensure budget neutrality as provided for in section 1886(d)(8)(D) of the Act by removing the FY 1995 budget neutrality factor and applying a revised factor;
- An adjustment to apply the revised outlier offset by removing the FY 1995 outlier offsets and applying a new offset; and
- An adjustment to apply a budget neutrality factor for the proposed change concerning transfer cases.

A. Calculation of Adjusted Standardized Amounts

1. Standardization of Base-Year Costs or Target Amounts

Section 1886(d)(2)(A) of the Act required the establishment of base-year cost data containing allowable operating costs per discharge of inpatient hospital services for each hospital. The preamble to the September 1, 1983 interim final rule (48 FR 39763) contains a detailed explanation of how base-year cost data were established in the initial development of standardized amounts for the prospective payment system and how they are used in computing the Federal rates.

Section 1886(d)(9)(B)(i) of the Act required that Medicare target amounts be determined for each hospital located in Puerto Rico for its cost reporting period beginning in FY 1987. The September 1, 1987 final rule contains a detailed explanation of how the target amounts were determined and how they are used in computing the Puerto Rico rates (52 FR 33043, 33066).

The standardized amounts are based on per discharge averages of adjusted hospital costs from a base period or, for Puerto Rico, adjusted target amounts from a base period, updated and otherwise adjusted in accordance with the provisions of section 1886(d) of the Act. Sections 1886(d)(2)(C) and (d)(9)(B)(ii) of the Act required that the updated base-year per discharge costs and, for Puerto Rico, the updated target amounts, respectively, be standardized in order to remove from the cost data the effects of certain sources of variation in cost among hospitals. These include case mix, differences in area wage levels, cost of living adjustments for Alaska and Hawaii, indirect medical education costs, and payments to hospitals serving a disproportionate share of low-income patients.

Since the standardized amounts have already been adjusted for differences in case mix, wages, cost-of-living, indirect medical education costs, and payments to hospitals serving a disproportionate share of low-income patients, no additional adjustments for these factors for FY 1996 were made. That is, the standardization adjustments reflected in the FY 1996 standardized amounts are the same as those reflected in the FY 1995 standardized amounts.

Sections 1886(d)(2)(H) and (d)(3)(E) of the Act require that, in making payments under the prospective payment system, the Secretary adjust the proportion (as estimated by the Secretary from time to time) of costs that are wages and wage-related costs. Beginning October 1, 1990, when the

market basket was rebased, we have considered 71.40 percent of costs to be labor-related for purposes of the prospective payment system.

2. Computing Large Urban and Other Averages Within Geographic Areas

Section 1886(d)(3) of the Act requires the Secretary to compute two average standardized amounts for discharges occurring in a fiscal year: one for hospitals located in large urban areas and one for hospitals located in other areas. In addition, under sections 1886(d)(9)(B)(iii) and (C)(i) of the Act, the average standardized amount per discharge must be determined for hospitals located in urban and other areas in Puerto Rico. Hospitals in Puerto Rico are paid a blend of 75 percent of the applicable Puerto Rico standardized amount and 25 percent of a national standardized payment amount.

Section 1886(d)(2)(D) of the Act defines ''urban areas'' as those areas within a Metropolitan Statistical Area (MSA). A ''large urban area'' is defined as an urban area with a population of more than 1,000,000. In addition, section 4009(i) of Public Law 100–203 provides that a New England County Metropolitan Area (NECMA) with a population of more than 970,000 is classified as a large urban area. As required by section 1886(d)(2)(D) of the Act, population size is determined by the Secretary based on the latest population data published by the Bureau of the Census. Urban areas that do not meet the definition of a ''large urban area'' are referred to as ''other urban areas.'' Areas that are not included in MSAs are considered ''rural areas'' under section 1886(d)(2)(D). Payment for discharges from hospitals located in large urban areas will be based on the large urban standardized amount. Payment for discharges from hospitals located in other urban and rural areas will be based on the other standardized amount.

Based on 1994 population estimates published by the Bureau of the Census, 56 areas meet the criteria to be defined as large urban areas for FY 1996. These areas are identified by an asterisk in Table 4a.

Table 1a contains the two national standardized amounts that we are proposing be applicable to most hospitals. Table 1b sets forth the 18 regional standardized amounts that would continue to be applicable for hospitals located in census areas subject to the regional floor. Under section 1886(d)(9)(A)(ii) of the Act, the national standardized payment amount applicable to hospitals in Puerto Rico consists of the discharge-weighted average of the national large urban standardized amount and the national other standardized amount (as set forth in Table 1a). The national average standardized amount for Puerto Rico is set forth in Table 1c. This table also includes the two standardized amounts that would be applicable to most hospitals in Puerto Rico.

3. Updating the Average Standardized Amounts

In accordance with section 1886(d)(3)(A)(iv) of the Act, we are proposing to update the large urban and the other areas average standardized amounts for FY 1996 using the applicable percentage increases specified in section 1886(b)(3)(B)(i) of the Act. Section 1886(b)(3)(B)(i)(XI) of the Act specifies that, for hospitals in all areas, the update factor for the standardized amounts for FY 1996 is the market basket percentage increase minus 2.0 percentage points.

The percentage change in the market basket reflects the average change in the price of goods and services purchased by hospitals to furnish inpatient care. The most recent forecast of the hospital market basket increase for FY 1996 is 3.5 percent. For FY 1996, this yields an update to the average standardized amounts of 1.5 percent (3.5 percent minus 2.0 percent).

As in the past, we are adjusting the FY 1995 standardized amounts to remove the effects of the FY 1995 geographic reclassifications and outlier payments before applying the FY 1996 updates. That is, we are increasing the standardized amounts to restore the reductions that were made for the effects of geographic reclassification and outliers. After including offsets to the standardized amounts for outliers and geographic reclassification, we estimate that there will be an actual increase of 1.2 percent to the large urban and other area standardized amounts.

Beginning in FY 1995, we revised the national average standardized amounts based on national average labor/nonlabor shares. In FY 1996, we will continue to adjust the labor and nonlabor proportions of the standardized amount to reflect the national average. As a result, the national average labor share (as reflected in the hospital market basket) will equal 71.4 percent of the standardized payment amounts. (We are revising the Puerto Rico standardized amounts by applying the average labor share in Puerto Rico of 82.8 percent.)

Although the update factor for FY 1996 is set by law, we are required by section 1886(e)(3)(B) of the Act to report to Congress on our initial recommendation of update factors for FY 1996 for both prospective payment hospitals and hospitals excluded from the prospective payment system. For general information purposes, we have included the report to Congress as Appendix C to this proposed rule. Our proposed recommendation on the update factors (which is required by sections 1886(e)(4)(A) and (e)(5)(A) of the Act), as well as our responses to ProPAC's recommendation concerning the update factor, are set forth as Appendix D to this proposed rule.

4. Other Adjustments to the Average Standardized Amounts

a. Recalibration of DRG Weights and Updated Wage Index—Budget Neutrality Adjustment.

Section 1886(d)(4)(C)(iii) of the Act specifies that beginning in FY 1991, the annual DRG reclassification and recalibration of the relative weights must be made in a manner that ensures that aggregate payments to hospitals are not affected. As discussed in section II of the preamble, we normalized the recalibrated DRG weights by an adjustment factor, so that the average case weight after recalibration is equal to the average case weight prior to recalibration.

Section 1886(d)(3)(E) of the Act specifies that the hospital wage index must be updated on an annual basis beginning October 1, 1993. This provision also requires that any updates or adjustments to the wage index must be made in a manner that ensures that aggregate payments to hospitals are not affected by the change in the wage index.

To comply with the requirement of section 1886(d)(4)(C)(iii) of the Act that DRG reclassification and recalibration of the relative weights be budget neutral and the requirement in section 1886(d)(3)(E) of the Act that the updated wage index be budget neutral, we compared aggregate payments using the FY 1995 relative weights and the wage index effective October 1, 1994 to aggregate payments using the proposed FY 1996 relative weights and wage index. The same methodology was used for the FY 1995 budget neutrality adjustment. (See the discussion in the September 1, 1992 final rule (57 FR 39832).) Based on this comparison, we computed a budget neutrality adjustment factor equal to 0.999174. This budget neutrality adjustment factor is applied to the standardized amounts without removing the effects of the FY 1995 budget neutrality adjustment. We do not remove the prior budget neutrality adjustment because estimated aggregate payments after the changes in

the DRG relative weights and wage index should equal estimated aggregate payments prior to the changes. If we removed the prior year adjustment, we would not satisfy this condition.

In addition, we are proposing to continue to apply the same FY 1996 adjustment factor to the hospital-specific rates that are effective for cost reporting periods beginning on or after October 1, 1995, in order to ensure that we meet the statutory requirement that aggregate payments neither increase nor decrease as a result of the implementation of the FY 1996 DRG weights and updated wage index. (See the discussion in the September 4, 1990 final rule (55 FR 36073).)

Section 1886(d)(5)(I) of the Act, as amended by section 109 of the Social Security Act Amendments of 1994 (Public Law 103–432), authorizes the Secretary to make adjustments to the prospective payment system standardized amounts so that adjustments to the payment policy for transfer cases do not affect aggregate payments. As discussed in section IV of the preamble, we are proposing to revise our payment methodology for transfer cases, so that we would pay double the per diem amount for the first day of a transfer case, and the per diem amount after that, up to the full DRG amount. For the data that we analyzed, this would result in additional payments for transfer cases of $159 million. To implement this proposed change in a budget neutral manner, we adjusted the standardized amounts by applying a budget neutrality adjustment of 0.997583. This adjustment will only be applied on a one-time basis to the FY 1996 standardized amounts. After FY 1996, there will be no need for a further budget neutrality adjustment unless or until we make further changes to the transfer payment methodology.

b. Reclassified Hospitals—Budget Neutrality Adjustment.

Section 1886(d)(8) (B) of the Act provides that certain rural hospitals are deemed urban effective with discharges occurring on or after October 1, 1988. In addition, section 1886(d)(10) of the Act provides for the reclassification of hospitals based on determinations by the Medicare Geographic Classification Review Board (MGCRB). Under section 1886(d)(10) of the Act, a hospital may be reclassified for purposes of the standardized amount or the wage index, or both.

Under section 1886(d)(8)(D) of the Act, the Secretary is required to adjust the standardized amounts so as to ensure that total aggregate payments under the prospective payment system after implementation of the provisions of sections 1886(d)(8) (B) and (C) and 1886(d)(10) of the Act are equal to the aggregate prospective payments that would have been made absent these provisions. We are applying an adjustment of 0.994125 to ensure that the effects of reclassification are budget neutral.

The adjustment factor is applied to the standardized amounts after removing the effects of the FY 1995 budget neutrality adjustment factor. We note that the proposed FY 1996 adjustment reflects wage index and standardized amount reclassifications approved by the MGCRB or the Administrator as of March 14, 1995. The effects of any additional reclassification changes resulting from appeals and reviews of the MGCRB decisions for FY 1996 or from a hospital's request for the withdrawal of a reclassification request will be reflected in the final budget neutrality adjustment required under section 1886(d)(8)(D) of the Act and published in the final rule for FY 1996.

c. Outliers.

Section 1886(d)(5)(A) of the Act provides that, in addition to the basic prospective payment rates, for discharges occurring before October 1, 1997, payments must be made for discharges involving day outliers and may be made for cost outliers. Section 1886(d)(3)(B) of the Act requires the Secretary to adjust both the large urban and other areas national standardized amounts by the same factor to account for the estimated proportion of total DRG payments made to outlier cases. Section 1886(d)(9)(B)(iv) of the Act requires that the urban and other standardized amounts applicable to hospitals in Puerto Rico be reduced by the proportion of estimated total DRG payments attributable to estimated outlier payments. Furthermore, under section 1886(d)(5)(A)(iv) of the Act, estimated outlier payments in any year may not be less than 5 percent nor more than 6 percent of total payments projected or estimated to be made based on DRG prospective payment rates.

Beginning with FY 1995, section 1886(d)(5)(A) of the Act requires the Secretary to reduce the proportion of total outlier payments paid under the day outlier methodology. Under the requirements of section 1886(d)(5)(A)(v) of the Act, the proportion of outlier payments made under the day outlier methodology, relative to the proportion of outlier payments made under the day outlier methodology in FY 1994 (which we estimated at 31.3 percent in our September 1, 1993 final rule (58 FR 46348)), will be 75 percent in FY 1995, 50 percent in FY 1996, and 25 percent in FY 1997. For discharges occurring after September 30, 1997, the Secretary will no longer pay for day outliers under the provisions of section 1886(d)(5)(A)(i) of the Act.

i. FY 1996 Outlier Thresholds.

For FY 1995, the day outlier threshold is the geometric mean length of stay for each DRG plus the lesser of 22 days or 3.0 standard deviations. The marginal cost factor for day outliers (or the percent of Medicare's average per diem payment paid for each outlier day) is equal to 47 percent in FY 1995. The fixed loss cost outlier threshold is equal to the prospective payment for the DRG plus $20,500 ($18,800 for hospitals that have not yet entered the prospective payment system for capital-related costs). The marginal cost factor for cost outliers (or the percent of costs paid after costs for the case exceed the threshold) is 80 percent. We applied an outlier adjustment to the FY 1995 standardized amounts of 0.948940 for the large urban and other areas rates and 0.9414 for the capital Federal rate.

For FY 1996, we propose to set the day outlier threshold at the geometric mean length of stay for each DRG plus the lesser of 23 days or 3.0 standard deviations. Section 1886(d)(5)(A)(iii) of the Act, as amended by section 13501(c)(3) of Public Law 103–66, provides that additional payments for day outlier cases are allowed to be reduced below the marginal cost of care to meet the requirements of section 1886(d)(5)(A)(v) of the Act. We are proposing to reduce the marginal cost factor for each outlier day from 47 percent to 45 percent in FY 1996. We estimate that our proposed policies will reduce the proportion of outlier payments paid as day outliers to approximately 16 percent in accordance with section 1886(d)(5)(A) of the Act.

We are also proposing a fixed loss cost outlier threshold in FY 1996 equal to the prospective payment rate for the DRG plus $16,700 ($15,200 for hospitals that have not yet entered the prospective payment system for capital-related costs). In addition, we are proposing to maintain the marginal cost factor for cost outliers at 80 percent.

As provided in section 1886(d)(5)(A)(iv) of the Act, we calculated outlier thresholds so that estimated outlier payments equal 5.1 percent of estimated total payments based on DRGs. The model to determine the outlier thresholds for FY 1996 uses the FY 1994 MedPAR file and the most recent available information on hospital-specific payment parameters (such as the cost-to-charge ratios). This information is based on the December 1994 update of the provider-specific file used in the PRICER program. Using

these data, we simulate the payments that would be made for these cases under certain assumptions and policies. The simulation provides estimates of outlier payments and total payments for the set of cases analyzed.

In simulating payments, we convert billed charges to costs for purposes of estimating cost outlier payments. As we explained in the September 1, 1993 final rule (58 FR 46347), prior to FY 1994, we used a charge inflation factor to adjust charges to costs; beginning with FY 1994, we are using a cost inflation factor to estimate costs. In other words, instead of inflating the FY 1994 charge data by a charge inflation factor for 2 years in order to estimate FY 1996 charge data and then applying the cost-to-charge ratio, we adjust the charges by the cost-to-charge ratio and then inflate the estimated costs for 2 years of cost inflation. In this manner, we automatically adjust for any changes in the cost-to-charge ratios that may occur, since the relevant variable is the costs estimated for a given case.

In setting the proposed FY 1996 outlier thresholds, we used a cost inflation factor of 1.02009. This reflects the average increase in cost per case between the data from cost reporting periods beginning in FY 1991 (referred to as PPS–VIII data) and the data from cost reporting periods beginning in FY 1993 (PPS–X data) for a matched set of hospitals. We made an audit adjustment for any cost report that had not been settled, based on the average ratio of submitted to final cost report data. This adjustment was made separately for Medicare inpatient capital costs and Medicare inpatient operating costs. We used the actual settlement ratio for PPS–VIII data, since most cost reports for that period have been settled. We also used the settlement ratio from PPS–VIII for the PPS–IX cost reports, since the PPS–IX settlement ratio currently available is based on many fewer hospitals (approximately 36 percent, as opposed to 93 percent for PPS–VIII).

When we modeled the combined operating and capital outlier payments, we found that using a common set of thresholds resulted in a lower percentage of outlier payments for capital-related costs than for operating costs. We estimate the proposed thresholds for FY 1996 will result in outlier payments equal to 5.1 percent of operating DRG payments and 4.7 percent of capital payments based on the Federal rate.

As stated in the September 1, 1993 final rule (58 FR 46348), we have established outlier thresholds that would be applicable to both inpatient operating costs and inpatient capital-related costs. As explained earlier, we will apply a reduction of approximately 5.1 percent to the FY 1996 standardized amounts to account for the proportion of payments paid to outliers. The proposed outlier adjustment factors applied to the standardized amounts and the capital Federal rate for FY 1996 are as follows:

Operating standardized amounts	Capital federal Rate
0.949054	0.9526

We would apply the proposed outlier adjustment factors after removing the effects of the FY 1995 outlier adjustment factors on the standardized amounts and the capital Federal rate.

ii. Other Changes Concerning Outliers.

Table 5 of section V of this addendum contains the DRG relative weights, geometric and arithmetic mean lengths of stay, as well as the day outlier threshold for each DRG. When we recalibrate DRG weights, we set a threshold of 10 cases as the minimum number of cases required to compute a reasonable weight and geometric mean length of stay. DRGs that do not have at least 10 cases are considered to be low volume DRGs. For the low volume DRGs, we use the original geometric mean lengths of stay, because no arithmetic mean length of stay was calculated based on the original data.

Table 8a in section V of this addendum contains the updated Statewide average operating cost-to-charge ratios for urban hospitals and for rural hospitals to be used in calculating cost outlier payments for those hospitals for which the intermediary is unable to compute a reasonable hospital-specific cost-to-charge ratio. These Statewide average ratios would replace the ratios published in the September 1, 1994 final rule (59 FR 45480), effective October 1, 1995. Table 8b contains comparable Statewide average capital cost-to-charge ratios. These average ratios would be used to calculate cost outlier payments for those hospitals for which the intermediary computes operating cost-to-charge ratios lower than 0.25960 or greater than 1.30826 and capital cost-to-charge ratios lower than 0.012912 or greater than 0.21945. This range represents 3.0 standard deviations (plus or minus) from the mean of the log distribution of cost-to-charge ratios for all hospitals. The cost-to-charge ratios in Tables 8a and 8b would be applied to all hospital-specific cost-to-charge ratios based on cost report settlements occurring during FY 1996.

iii. FY 1994 and FY 1995 Outlier Payments. In the September 1, 1994 final rule (59 FR 45408), we estimated that actual FY 1994 outlier payments would be approximately 3.9 percent of total DRG payments. This figure was computed by simulating payments using actual FY 1993 bill data available at the time. That is, the figure did not reflect actual FY 1994 bills but instead reflected the application of FY 1994 rates and policies to available FY 1993 bills. Our current estimate, using FY 1994 rates, policies, and available bills, is that actual FY 1994 outlier payments were approximately 3.5 percent of total DRG payments.

In FY 1994, we began using a cost inflation factor rather than a charge inflation factor to update billed charges for purposes of estimating outlier payments. This refinement was made in order to improve our estimation methodology. We believe that actual FY 1994 outlier payments as a percentage of total DRG payments may be lower than expected because actual hospital costs may be lower than reflected in the methodology used to set the FY 1994 outlier thresholds. Our most recent data on hospital costs show a significant trend in declining rates of increase. Thus, the cost inflation factor of 8.3 percent used to set FY 1994 outlier policy (based on the best available data) appears to have been overstated. For FY 1995, we used a cost inflation factor of 2.5 percent. For FY 1996, based on more recent data, we are proposing a cost inflation factor of 2.009 percent to set outlier policy. Also, although we estimate that FY 1994 outlier payments will approximate 3.5 percent of total DRG payments, we note that the estimate of the market basket rate of increase used to set the FY 1994 rates was 4.3 percentage points, while the latest FY 1994 market basket rate of increase forecast is 2.5 percent. Thus, the net effect is that hospitals are receiving higher FY 1994 payments than would have been established based on a more recent forecast of the market basket rate of increase.

We currently estimate that FY 1995 outlier payments will approximate 4.2 percent of total DRG payments. This estimate is based on simulations using the December 1994 update of the provider-specific file and the December 1994 update of the FY 1994 MedPAR file. We used these data to estimate an outlier percentage by applying FY 1995 rates and policies to available FY 1994 bills.

We believe that there are two main reasons why our current estimate of actual FY 1995 outlier payments is below 5.1 percent. First, in setting the

outlier thresholds for FY 1995, we used 2.5 percent as our cost inflation factor to inflate FY 1993 bills to FY 1995 levels. Our current estimate of cost inflation is 2.009 percent, demonstrating that the rate of increase in costs continues to slow.

Second, in setting the outlier thresholds for FY 1995, we used cost-to-charge ratios that had a mean value of 0.618. Our current estimate of cost-to-charge ratios for FY 1995 is down to 0.605. Thus, not only are costs not rising as fast as we estimated, but they also make up a lower percentage of charges than we estimated in setting FY 1995 thresholds. We are continuing to explore better ways to forecast the changes in cost inflation.

B. Adjustments for Area Wage Levels and Cost of Living

The adjusted standardized amounts are divided into labor and nonlabor portions. Tables 1a, 1b, and 1c, as set forth in this addendum, contain the actual labor-related and nonlabor-related shares that will be used to calculate the prospective payment rates for hospitals located in the 50 States, the District of Columbia, and Puerto Rico. This section addresses two types of adjustments to the standardized amounts that are made in determining the prospective payment rates as described in this addendum.

1. Adjustment for Area Wage Levels

Sections 1886(d)(3)(E) and 1886(d)(9)(C)(iv) of the Act require that an adjustment be made to the labor-related portion of the prospective payment rates to account for area differences in hospital wage levels. This adjustment is made by multiplying the labor-related portion of the adjusted standardized amounts by the appropriate wage index for the area in which the hospital is located. In section III of the preamble, we discuss certain revisions we are making to the wage index. This index is set forth in Tables 4a through 4e of this addendum.

2. Adjustment for Cost of Living in Alaska and Hawaii

Section 1886(d)(5)(H) of the Act authorizes an adjustment to take into account the unique circumstances of hospitals in Alaska and Hawaii. Higher labor-related costs for these two States are taken into account in the adjustment for area wages described above. For FY 1996, we propose to adjust the payments for hospitals in Alaska and Hawaii by multiplying the nonlabor portion of the standardized amounts by the appropriate adjustment factor contained in the table below. If the Office of Personnel Management releases revised cost-of-living adjustment factors before August 1, 1995, we will publish them in the final rule and use them in determining FY 1996 payments.

TABLE OF COST-OF-LIVING ADJUSTMENT FACTORS, ALASKA AND HAWAII HOSPITALS

Alaska—All areas	1.25
Hawaii:	
Oahu	1.225
Kauai	1.20
Maui	1.20
Molokai	1.20
Lanai	1.20
Hawaii	1.15

(The above factors are based on data obtained from the U.S. Office of Personnel Management.)

C. DRG Relative Weights

As discussed in section II of the preamble, we have developed a classification system for all hospital discharges, assigning them into DRGs, and have developed relative weights for each DRG that reflect the resource utilization of cases in each DRG relative to Medicare cases in other DRGs. Table 5 of section V of this addendum contains the relative weights that we propose to use for discharges occurring in FY 1996. These factors have been recalibrated as explained in section II of the preamble.

D. Calculation of Prospective Payment Rates for FY 1996

General Formula for Calculation of Prospective Payment Rates for FY 1996

Prospective payment rate for all hospitals located outside Puerto Rico except sole community hospitals = Federal rate.

Prospective payment rate for sole community hospitals = Whichever of the following rates yields the greatest aggregate payment: 100 percent of the Federal rate, 100 percent of the updated FY 1982 hospital-specific rate, or 100 percent of the updated FY 1987 hospital-specific rate.

Prospective payment rate for Puerto Rico = 75 percent of the Puerto Rico rate + 25 percent of a discharge-weighted average of the national large urban standardized amount and the national other standardized amount.

1. Federal Rate

For discharges occurring on or after October 1, 1995 and before October 1, 1996, except for sole community hospitals, hospitals subject to the regional floor, and hospitals in Puerto Rico, the hospital's payment is based exclusively on the Federal national rate. Section 1866(d)(1)(A)(iii) of the Act provides that the Federal rate is comprised of 100 percent of the Federal national rate except for those hospitals in census regions that have a regional rate that is higher than the national rate. The Federal rate for hospitals located in census regions that have a regional rate that is higher than the national rate equals 85 percent of the Federal national rate plus 15 percent of the Federal regional rate. Based on the proposed rates, for discharges occurring on or after October 1, 1995, hospitals in regions are affected by the regional floor.

The payment amount is determined as follows:

Step 1—Select the appropriate national or regional adjusted standardized amount considering the type of hospital and designation of the hospital as large urban or other (see Tables 1a and 1b, section V of this addendum).

Step 2—Multiply the labor-related portion of the standardized amount by the applicable wage index for the geographic area in which the hospital is located (see Tables 4a, 4b, and 4c, section V of this addendum).

Step 3—For hospitals in Alaska and Hawaii, multiply the nonlabor-related portion of the standardized amount by the appropriate cost-of-living adjustment factor.

Step 4—Add the amount from Step 2 and the nonlabor-related portion of the standardized amount (adjusted if appropriate under Step 3).

Step 5—Multiply the final amount from Step 4 by the relative weight corresponding to the appropriate DRG (see Table 5, section V of this addendum).

2. Hospital-Specific Rate (Applicable Only to Sole Community Hospitals)

Sections 1886(d)(5)(D)(i) and (b)(3)(C) of the Act provide that sole community hospitals are paid based on whichever of the following rates yields the greatest aggregate payment: the Federal rate, the updated hospital-specific rate based on FY 1982 cost per discharge, or the updated hospital-specific rate based on FY 1987 cost per discharge.

Hospital-specific rates have been determined for each of these hospitals based on both the FY 1982 cost per discharge and the FY 1987 cost per discharge. For a more detailed discussion of the calculation of the FY 1982 hospital-specific rate and the FY 1987 hospital-specific rate, we refer the reader to the September 1, 1983 interim

final rule (48 FR 39772); the April 20, 1990 final rule with comment (55 FR 15150); and the September 4, 1990 final rule (55 FR 35994).

a. *Updating the FY 1982 and FY 1987 Hospital-Specific Rates for FY 1996.* We are proposing to increase the hospital-specific rates by 1.5 percent (the hospital market basket percentage increase minus 2.0 percentage points) for sole community hospitals located in all areas in FY 1996. Section 1886(b)(3)(C)(ii) of the Act provides that the update factor applicable to the hospital-specific rates for sole community hospitals equals the update factor provided under section 1886(b)(3)(B)(ii) of the Act, which, for FY 1996, is the market basket rate of increase minus 2.0 percentage points.

b. Calculation of Hospital-Specific Rate. For sole community hospitals, the applicable FY 1996 hospital-specific rate would be calculated by multiplying a hospital's hospital-specific rate for the preceding fiscal year by the applicable update factor (1.5 percent), which is the same as the update for all prospective payment hospitals. In addition, the hospital-specific rate would be adjusted by the budget neutrality adjustment factor (that is, .999174) as discussed in section II.A.4.a of this addendum. This resulting rate would be used in determining under which rate a sole community hospital is paid for its discharges beginning on or after October 1, 1995, based on the formula set forth above.

3. General Formula for Calculation of Prospective Payment Rates for Hospitals Located in Puerto Rico Beginning On or After October 1, 1995 and Before October 1, 1996

a. Puerto Rico Rate. The Puerto Rico prospective payment rate is determined as follows:

Step 1—Select the appropriate adjusted average standardized amount considering the large urban or other designation of the hospital (see Table 1c, section V of the addendum).

Step 2—Multiply the labor-related portion of the standardized amount by the appropriate wage index (see Tables 4a and 4b, section V of the addendum).

Step 3—Add the amount from Step 2 and the nonlabor-related portion of the standardized amount.

Step 4—Multiply the result in Step 3 by 75 percent.

Step 5—Multiply the amount from Step 4 by the appropriate DRG relative weight (see Table 5, section V of the addendum).

b. National Rate. The national prospective payment rate is determined as follows:

Step 1—Multiply the labor-related portion of the national average standardized amount (see Table 1c, section V of the addendum) by the appropriate wage index.

Step 2—Add the amount from Step 1 and the nonlabor-related portion of the national average standardized amount.

Step 3—Multiply the result in Step 2 by 25 percent.

Step 4—Multiply the amount from Step 3 by the appropriate DRG relative weight (see Table 5, section V of the addendum).

The sum of the Puerto Rico rate and the national rate computed above equals the prospective payment for a given discharge for a hospital located in Puerto Rico.

III. Proposed Changes to Payment Rates for Inpatient Capital-Related Costs for FY 1996

The prospective payment system for hospital inpatient capital-related costs was implemented for cost reporting periods beginning on or after October 1, 1991. Effective with that cost reporting period and during a 10-year transition period extending through FY 2001, hospital inpatient capital-related costs are paid on the basis of an increasing proportion of the capital prospective payment system Federal rate and a decreasing proportion of the historical costs for capital.

The basic methodology for determining Federal capital prospective rates is set forth at §§ 412.308 through 412.352. Below we discuss the factors that we used to determine the proposed Federal rate and the hospital-specific rates for FY 1996. The rates will be effective for discharges occurring on or after October 1, 1995.

For FY 1992, we computed the standard Federal payment rate for capital-related costs under the prospective payment system by updating the FY 1989 Medicare inpatient capital cost per case by an actuarial estimate of the increase in Medicare inpatient capital costs per case. Each year after FY 1992 we update the standard Federal rate, as provided in § 412.308(c)(1), to account for capital input price increases and other factors. Also, § 412.308(c)(2) provides that the Federal rate is adjusted annually by a factor equal to the estimated additional payments under the Federal rate for outlier cases, determined as a proportion of total capital payments under the Federal rate. Section 412.308(c)(3) further requires that the Federal rate be reduced by an adjustment factor equal to the estimated additional payments made for exceptions under § 412.348, and § 412.308(c)(4)(ii) requires that the Federal rate be adjusted so that the annual DRG reclassification and the recalibration of DRG weights and changes in the geographic adjustment factor are budget neutral. For FY 1992 through FY 1995, § 412.352 required that the Federal rate also be adjusted by a budget neutrality factor so that estimated aggregate payments for inpatient hospital capital costs will equal 90 percent of the estimated payments that would have been made for capital-related costs on a reasonable cost basis during the fiscal year. As discussed below, that provision has now expired.

The hospital-specific rate for each hospital was calculated by dividing the hospital's Medicare inpatient capital-related costs for a specified base year by its Medicare discharges (adjusted for transfers), and dividing the result by the hospital's case mix index (also adjusted for transfers). The resulting case-mix adjusted average cost per discharge was then updated to FY 1992 based on the national average increase in Medicare's inpatient capital cost per discharge and adjusted by the exceptions payment adjustment factor and the budget neutrality adjustment factor to yield the FY 1992 hospital-specific rate. The hospital-specific rate is updated each year after FY 1992 for inflation and for changes in the exceptions payment adjustment factor. For FY 1992 through FY 1995, the hospital-specific rate was also adjusted by a budget neutrality adjustment factor.

To determine the appropriate budget neutrality adjustment factors and the exceptions payment adjustment factor, we developed a dynamic model of Medicare inpatient capital-related costs, that is, a model that projects changes in Medicare inpatient capital-related costs over time. With the expiration of the budget neutrality provision, the model is still used to estimate the exceptions payment adjustment and other factors. The model and its application are described more fully in Appendix B.

In accordance with section 1886(d)(9)(A) of the Act, under the prospective payment system for inpatient operating costs, hospitals located in Puerto Rico are paid under a special payment formula. These hospitals are paid a blended rate that is comprised of 75 percent of the applicable standardized amount specific to Puerto Rico hospitals and 25 percent of the applicable national average standardized amount. Section 412.374

provides for the use of this blended payment system for payments to Puerto Rico hospitals under the prospective payment system for inpatient capital-related costs. Accordingly, for capital-related costs we compute a separate payment rate specific to Puerto Rico hospitals using the same methodology used to compute the national Federal rate for capital. Hospitals in Puerto Rico are paid based on 75 percent of the Puerto Rico rate and 25 percent of the Federal rate.

A. Determination of Federal Inpatient Capital-Related Prospective Payment Rate Update

For FY 1995, the Federal rate was $376.83. With the changes we are proposing to the factors used to establish the Federal rate, the FY 1996 Federal rate would be $457.11.

In the discussion that follows, we explain the factors that were used to determine the FY 1996 Federal rate. In particular, we explain why the FY 1996 Federal rate has increased 21.3 percent compared to the FY 1995 Federal rate. We also explain that aggregate payments for capital in FY 1996 are estimated to increase by 20.45 percent.

The major factor contributing to the increase in the FY 1996 rate in comparison to FY 1995 is the expiration of the budget neutrality requirement. Section 412.352 required that estimated payments each year from FY 1992 through FY 1995 for capital costs equal 90 percent of the amount that would have been payable that year on a reasonable cost basis. Accordingly, each year from FY 1992 through FY 1995, we applied an adjustment to the Federal rate and the hospital-specific rate so that estimated capital prospective payments would equal 90 percent of estimated Medicare hospital inpatient capital-related costs.

Based on the most recent data, we now estimate that capital payments equalled 95.11 percent of reasonable costs in FY 1992, 91.07 percent of reasonable costs in FY 1993, 91.00 percent of reasonable costs in FY 1994, and 91.06 percent of reasonable costs in FY 1995. Thus, the data indicate that the budget neutrality adjustments for FY 1992, FY 1993, and FY 1994 were not sufficient to meet the 90 percent target and, consequently, the Federal rates for FY 1992, FY 1993, FY 1994, and FY 1995 were higher than they should have been. We do not retroactively adjust the budget neutrality factor and the Federal rate for previous years to account for revised estimates. For FY 1996, we estimate that payments will exceed costs by 4.52 percent as a result of the expiration of the budget neutrality provision.

As we explain in section III.A.8 below, the predominant factor in the 21.3 percent increase in the Federal rate, as well as the 20.45 percent increase in payments, is the expiration of the budget neutrality provision. For FY 1995, the budget neutrality adjustment was 0.8432, a 15.68 percent reduction to the rates. The expiration of that provision alone accounts for an 18.6 percent increase (1.00/.8432 = 1.186, or 18.6 percent) in the rate. The FY 1996 update factor and changes in the outlier and exceptions factors also contribute to the increase in the rate. The factors contributing to the increase in the rate were partially offset by special adjustments to the rate to account for the effects of the new transfer policy and the new treatment of capital-related tax costs, and by the effect of the DRG/GAF reduction factor.

Total payments to hospitals under the prospective payment system are relatively insensitive even to changes of such magnitude in the capital Federal rate. Since capital payments constitute about 10 percent of hospital payments, a 1 percent change in the capital Federal rate yields only about 0.1 percent change in actual payments to hospitals. Therefore, the large increase in the FY 1996 Federal rate can be expected to increase total payments to hospitals under the prospective payment system by only about 2.04 percent.

1. Standard Federal Rate Adjustment for the New Treatment of Capital-Related Tax Costs

Section V.B of the preamble to this proposed rule discusses our proposal to revise the treatment of capital-related tax costs within the prospective payment system for capital-related costs. As we discuss in that section, adoption of any adjustment to the capital Federal rate payment for capital-related tax costs requires a corresponding adjustment of the standard Federal rate to offset the amount of capital-related tax costs originally included in the computation of the rate. In this way, adoption of the tax adjustment will be budget neutral: capital payments will neither increase nor decrease because of the adoption of the tax adjustment.

We propose to use the following methodology to adjust the standard Federal rate to account for the tax costs included in the original computation of the rate. We propose to subtract the total FY 1992 Medicare capital-related taxes for all hospitals from the total FY 1992 Medicare capital-related costs for all hospitals. The result is FY 1992 Medicare capital-related costs without taxes. We then determine the ratio of FY 1992 Medicare capital-related costs without taxes to total FY 1992 Medicare capital-related costs, including capital-related tax costs. We then apply this ratio to the base Federal rate to remove the capital-related tax costs currently incorporated into that rate. As a result of these calculations, we are providing in this proposed rule for an estimated 1.14 percent decrease to the base Federal rate to account for the tax costs originally included in the rate. As discussed in section V.B of the preamble to this proposed rule, we will recompute this adjustment on the basis of the verified hospital FY 1992 capital-related tax cost data available for the final rule.

2. Special Federal Rate Adjustment for the Effects of the New Transfer Payment Policy

Section 412.312(d) provides that payment under the capital prospective payment system for transfer cases is made under the same rules governing transfer payments under the operating prospective payment system. Transfer cases under the prospective payment system for capital-related costs have been paid on a per diem basis, using the full prospective payment amount for the DRG (both Federal rate and hospital-specific rate, if appropriate) divided by the geometric mean length of stay for the DRG, but not to exceed the full prospective payment. Section IV.A of the preamble describes our proposal to adopt a graduated per diem payment methodology for transfer cases. Under this proposal, we would pay double the per diem amount for the first day and the per diem amount for subsequent days, up to the full prospective payment amount. Section 109 of the Social Security Amendments of 1994 (Public Law 103–432) authorizes the Secretary to make adjustments to the operating prospective payment system rates so that adjustments to the payment policy for transfer cases do not affect aggregate payments. Section II of the addendum describes the methodology for making the adjustment to the operating rates.

In order to maintain consistency with the prospective payment system for operating costs, we believe that a parallel adjustment to the Federal capital rate and the hospital-specific capital rates is warranted. In this way, revision of the payment policy for transfer cases will not affect aggregate payments under the prospective payment system for capital-related costs. We describe the methodology for making this adjustment in Appendix B to this proposed rule. Following that

methodology, we have determined that a special adjustment of .9972 (−0.28 percent) to the standard Federal rate and the hospital-specific rates is required.

3. Standard Federal Rate Update

Section 412.308(c)(1)(ii) provides that, effective FY 1996, the standard Federal rate is updated on the basis of an analytical framework that takes into account changes in a capital input price index and other factors. We discuss the proposed analytical framework and the derivation of the proposed FY 1996 update factor under that framework in section V.A of the preamble to this proposed rule. The proposed update factor is 1.5 percent.

4. Outlier Payment Adjustment Factor

Section 412.312(c) establishes a unified outlier methodology for inpatient operating and inpatient capital-related costs. A single set of thresholds is used to identify outlier cases for both inpatient operating and inpatient capital-related payments. Outlier payments are made only on the portion of the Federal rate that is used to calculate the hospital's inpatient capital-related payments (for example, 50 percent for cost reporting periods beginning in FY 1996 for hospitals paid under the fully prospective methodology). Section 412.308(c)(2) provides that the standard Federal rate for inpatient capital-related costs be reduced by an adjustment factor equal to the estimated additional payments under the Federal rate for outlier cases, determined as a proportion of inpatient capital-related payments under the Federal rate. The outlier thresholds are set so that estimated outlier payments are 5.1 percent of estimated total DRG payments. The inpatient capital-related outlier reduction factor is then set according to the estimated inpatient capital-related outlier payments that would be made if all hospitals were paid according to 100 percent of the Federal rate. For purposes of calculating the outlier thresholds and the outlier reduction factor, we model all hospitals as if paid 100 percent of the Federal rate because, as explained above, outlier payments are made only on the portion of the Federal rate that is included in the hospital's inpatient capital-related payments.

In the September 1, 1994 final rule, we estimated that outlier payments for capital in FY 1995 would equal 5.86 percent of inpatient capital-related payments based on the Federal rate. Accordingly, we applied an outlier adjustment factor of 0.9414 to the Federal rate. Based on the thresholds as set forth in section II.A.4.d of the addendum, we estimate that outlier payments will equal 4.74 percent of inpatient capital-related payments based on the Federal rate in FY 1996. We are, therefore, proposing an outlier adjustment factor of 0.9526 to the Federal rate. Thus, proposed capital outlier payments for FY 1996 represent a lower percentage of total capital standard payments than in FY 1995.

The outlier reduction factors are not built permanently into the rates; that is, they are not applied cumulatively in determining the Federal rate. Therefore, the proposed net change in the outlier adjustment to the Federal rate for FY 1996 is 1.0119 (.9526/.9414). Thus, the proposed outlier adjustment increases the FY 1996 Federal rate by 1.19 percent (1.0119–1) compared with the FY 1995 outlier adjustment.

5. Budget Neutrality Adjustment Factor for Changes in DRG Classifications and Weights and the Geographic Adjustment Factor

Section 412.308(c)(4)(ii) requires that the Federal rate be adjusted so that estimated aggregate payments for the fiscal year based on the Federal rate after any changes resulting from the annual DRG reclassification and recalibration and changes in the geographic adjustment factor equal estimated aggregate payments that would have been made on the basis of the Federal rate without such changes. We use the actuarial model described in Appendix B to estimate the aggregate payments that would have been made on the basis of the Federal rate without changes in the DRG classifications and weights and in the geographic adjustment factor. We also use the model to estimate aggregate payments that would be made on the basis of the Federal rate as a result of those changes. We then use these figures to compute the adjustment required to maintain budget neutrality for changes in DRG weights and in the geographic adjustment factor.

For FY 1995, we calculated a GAF/DRG budget neutrality factor of 0.9998. For FY 1996, we are proposing a GAF/DRG budget neutrality factor of 0.9993. The GAF/DRG budget neutrality factors are built permanently into the rates; that is, they are applied cumulatively in determining the Federal rate. This follows from the requirement that estimated aggregate payments each year be no more than they would have been in the absence of the annual DRG reclassification and recalibration and changes in the geographic adjustment factor. The proposed incremental change in the adjustment from FY 1995 to FY 1996 is 0.9993. The proposed cumulative change in the rate due to this adjustment is 1.0024 (the product of the incremental factors for FY 1993, FY 1994, FY 1995, and the proposed incremental factor for FY 1996: .9980×1.0053×.9998×.9993=1.0024).

This factor accounts for DRG reclassifications and recalibration and for changes in the geographic adjustment factor. It also incorporates the effects on the geographic adjustment factor of FY 1996 geographic reclassification decisions made by the MGCRB compared to FY 1995 decisions. However, it does not account for changes in payments due to changes in the disproportionate share and indirect medical education adjustment factors or in the large urban add-on.

6. Exceptions Payment Adjustment Factor

Section 412.308(c)(3) requires that the standard Federal rate for inpatient capital-related costs be reduced by an adjustment factor equal to the estimated additional payments for exceptions under § 412.348 determined as a proportion of total payments under the hospital-specific rate and Federal rate. We use the model originally developed for determining the budget neutrality adjustment factor to estimate payments under the exceptions payment process and to determine the exceptions payment adjustment factor. We describe that model in Appendix B to this proposed rule.

For FY 1995, we estimated that exceptions payments would equal 2.66 percent of aggregate payments based on the Federal rate and the hospital-specific rate. Therefore, we applied an exceptions reduction factor of 0.9734 (1–.0266) in determining the Federal rate. For this proposed rule, we estimate that exceptions payments for FY 1996 will equal 1.60 percent of aggregate payments based on the Federal rate and the hospital-specific rate. We are, therefore, proposing an exceptions payment reduction factor of 0.9840 to the Federal rate for FY 1996.

The proposed exceptions reduction factor for FY 1996 is thus 1.09 percent higher than the factor for FY 1995. The reduced level of estimated exceptions payments for FY 1996 compared to FY 1995 is a result of the significant increases in the capital rates and in aggregate capital payments.

The exceptions reduction factors are not built permanently into the rates; that is, the factors are not applied cumulatively in determining the Federal rate. Therefore, the proposed net adjustment to the FY 1996 Federal rate is .9840/.9734, or 1.0109.

7. Expiration of Budget Neutrality Provision

For FY 1992 through FY 1995, § 412.352 required that the Federal rate also be adjusted by a budget neutrality factor so that estimated aggregate payments for inpatient hospital capital costs would equal 90 percent of the estimated payments that would have been made for capital-related costs on a reasonable cost basis during the fiscal year. That provision has now expired. The expiration of the budget neutrality provision is the predominant factor in the 21.3 percent increase in the Federal rate, as well as the 20.4 percent increase in payments.

For FY 1995, the budget neutrality adjustment was 0.8432, a 15.68 percent reduction to the rates. The budget neutrality factors were not built permanently into the rates; that is, the factors were not applied cumulatively in determining the Federal rate. With the expiration of the budget neutrality provision, the proposed net adjustment to the rate is thus 1.186 (1.00/.8432=1.186), or 18.6 percent. The expiration of the provision, therefore, accounts for an 18.6 percent increase in the rate.

8. Standard Capital Federal Rate for FY 1996

For FY 1995, the capital Federal rate was $376.83. With the changes we are proposing to the factors used to establish the Federal rate, the FY 1996 Federal rate would be $457.11. The proposed Federal rate for FY 1996 was calculated as follows:

- The proposed special adjustment to the standard Federal rate to account for the change in transfer payment policy is 0.9972.
- The proposed special adjustment to remove the capital-related tax costs included in the original computation of the rate is 0.9886.
- The proposed FY 1996 update factor is 1.0150.
- The proposed FY 1996 outlier adjustment factor is 0.9526.
- The proposed FY 1996 budget neutrality adjustment factor that is applied to the standard Federal payment rate for changes in the DRG relative weights and in the geographic adjustment factor is 0.9993.
- The proposed FY 1996 exceptions payments adjustment factor is 0.9840.
- The expiration of the budget neutrality provision requires that the FY 1995 budget neutrality adjustment be removed from the rate without further incremental adjustment.

Since the Federal rate has already been adjusted for differences in case mix, wages, cost of living, indirect medical education costs, and payments to hospitals serving a disproportionate share of low-income patients, we propose to make no additional adjustments in the standard Federal rate for these factors other than the budget neutrality factor for changes in the DRG relative weights and the geographic adjustment factor.

We are providing a chart that shows how each of the factors and adjustments for FY 1996 affected the computation of the proposed FY 1996 Federal rate in comparison to the FY 1995 Federal rate. The proposed special adjustments to account for the effects of changes in transfer payment policy and in the treatment of capital-related tax costs have the effect of reducing the rate by 0.28 percent and 1.14 percent, respectively. The proposed FY 1996 update factor has the effect of increasing the Federal rate 1.50 percent compared to the rate in FY 1994, while the proposed geographic and DRG budget neutrality factor has the effect of decreasing the Federal rate by 0.07 percent. The proposed FY 1996 outlier adjustment factor has the effect of increasing the Federal rate by 1.19 percent compared to FY 1995. The proposed FY 1996 exceptions reduction factor has the effect of increasing the Federal rate by 1.09 percent compared to the exceptions reduction for FY 1995. Finally, the expiration of the budget neutrality provision has the effect of increasing the proposed FY 1996 rate by 18.60 percent compared to the effect of the budget neutrality reduction in FY 1995. The combined effect of all the proposed changes is to increase the proposed Federal rate by 21.3 percent compared to the Federal rate for FY 1995.

COMPARISON OF FACTORS AND ADJUSTMENTS: FY 1995 FEDERAL RATE AND PROPOSED FY 1996 FEDERAL RATE

		Change	Percent change
Transfer adjustment			
FY 1995:	N/A		
Proposed FY 1996:	0.9972	0.9972	−0.28
Tax adjustment			
FY 1995:	N/A		
Proposed FY 1996:	0.9886	0.9886	−1.14
Update factor [1]			
FY 1995:	1.0344		
Proposed FY 1996:	1.0150	1.0150	1.50
GAF/DRG adjustment factor [1]			
FY 1995:	0.9998		
Proposed FY 1996:	0.9993	0.9993	−0.07
Outlier adjustment factor [2]			
FY 1995:	0.9414		
Proposed FY 1996:	0.9526	1.0119	1.19
Exceptions adjustment factor			
FY 1995 [2]	0.9734		
Proposed FY 1996:	0.9840	1.0109	1.09
Budget neutrality adjustment factor [2]			
FY 1995:	0.8432		
Proposed FY 199	1.0000	1.1860	18.60
Federal rate			
FY 1995:	$376.83		
Proposed FY 1996:	$457.11	1.2130	21.30

[1] The update factor and the GAF/DRG budget neutrality factors are built permanently into the rates. Thus, for example, the incremental change from FY 1995 to FY 1996 resulting from the application of the 0.9993 GAF/DRG budget neutrality factor for FY 1996 is 0.9993.

[2] The outlier reduction factor and the exceptions reduction factor are not built permanently into the rates; that is, these factors are not applied cumulatively in determining the rates. Thus, for example, the net change resulting from the application of the FY 1996 exceptions reduction factor is 0.9840/0.9734, or 1.0119.

9. Special Rate for Puerto Rico Hospitals

For FY 1995, the special rate for Puerto Rico hospitals was $289.87. With the changes we are proposing to the factors used to determine the rate, the proposed FY 1996 special rate for Puerto Rico would be $351.61.

B. Determination of Hospital-Specific Rate Update

Section 412.328(e) of the regulations provides that the hospital-specific rate for FY 1996 be determined by adjusting the FY 1995 hospital-specific rate by the following factors:

1. Special Adjustment for the Effects of the New Transfer Policy

Section 412.312(d) of the regulations provides that payment under the capital prospective payment system for transfer cases is made under the same rules governing transfer payments under the operating prospective payment system. Transfer cases under the prospective payment system for capital-related costs have been paid on a per diem basis, using the full prospective payment amount for the DRG (both Federal rate and hospital-specific rate, if appropriate) divided by the geometric mean length of stay for the DRG, but not to exceed the full prospective payment. Section IV.A of the preamble to this proposed rule describes our proposal to adopt a graduated per diem payment methodology for transfer cases. Under this proposal, we would pay double the per diem amount for the first day and the per diem amount for subsequent days, up to the full prospective payment amount. Section 109 of the Social Security Amendments of 1994 (Public Law 103–432) authorizes the Secretary to make adjustments to the operating prospective payment system rates so that adjustments to the payment policy for transfer cases do not affect aggregate payments. Section II of this Addendum describes the methodology for making the adjustment to the operating rates.

In order to maintain consistency with the prospective payment system for operating costs, we believe that a parallel adjustment to the Federal capital rate and the hospital-specific capital rates is warranted. In this way, revision of the payment policy for transfer cases will not affect aggregate payments under the prospective payment system for capital-related costs. We describe the methodology for making this adjustment in Appendix B of this proposed rule. Following that methodology, we have determined that a special adjustment of 0.9972 (-0.28 percent) to the standard Federal rate and the hospital-specific rates is required. We propose to revise § 412.328(e) accordingly.

2. Hospital-Specific Rate Update Factor

The hospital-specific rate is updated in accordance with the update factor for the standard Federal rate determined under § 412.308(c)(1). For FY 1996, we are proposing that the hospital-specific rate be updated by a factor of 1.015.

3. Exceptions Payment Adjustment Factor

For FY 1992 through FY 2001, the updated hospital-specific rate is multiplied by an adjustment factor to account for estimated exceptions payments for capital-related costs under § 412.348, determined as a proportion of the total amount of payments under the hospital-specific rate and the Federal rate. For FY 1996, we estimate that exceptions payments will be 1.60 percent of aggregate payments based on the Federal rate and the hospital-specific rate. We therefore propose that the updated hospital-specific rate be reduced by a factor of 0.9840. The exceptions reduction factors are not built permanently into the rates; that is, the factors are not applied cumulatively in determining the hospital-specific rate. Therefore, the proposed net adjustment to the FY 1996 hospital-specific rate is .9840/.9734, or 1.0109.

4. Expiration of the Budget Neutrality Provision

For FY 1992 through FY 1995, the updated hospital-specific rate was adjusted by a budget neutrality adjustment factor determined under § 412.352, so that estimated aggregate payments under the capital prospective payment system would equal 90 percent of estimated payments that would have been made on a reasonable cost basis. (The budget neutrality adjustment for changes in the DRG classifications and relative weights and in the geographic adjustment factor is not applied to the hospital-specific rate.) For FY 1995, the budget neutrality adjustment was 0.8432. The budget neutrality provision has now expired. Therefore, for FY 1996 there is no budget neutrality adjustment. The budget neutrality factor was not built permanently into the rates; that is, the factor was not applied cumulatively in determining the hospital-specific rate. Therefore, the proposed net adjustment to the FY 1996 hospital-specific rate as a result of the expiration of the budget neutrality provision is 1.0000/.8432, or 1.1860.

5. Net Change to Hospital-Specific Rate

We are providing a chart to show the net change to the hospital-specific rate. The chart shows the factors for FY 1995 and FY 1996 and the net adjustment for each factor. It also shows that the proposed cumulative net adjustment from FY 1995 to FY 1996 is 1.2134, which represents a proposed increase of 21.34 percent to the hospital-specific rate. The proposed FY 1996 hospital-specific rate for each hospital is determined by multiplying the FY 1995 hospital-specific rate by the cumulative net adjustment of 1.2134.

PROPOSED FY 1996 UPDATE AND ADJUSTMENTS TO HOSPITAL-SPECIFIC RATES

		Net adjustment	Percent change
Transfer adjustment			
FY 1995:	N/A		
Proposed FY 1996:	0.9972	0.9972	−0.28
Update factor			
FY 1995:	1.0304		
Proposed FY 1996:	1.0150	1.0150	1.50
Exceptions payment adjustment factor			
FY 1995:	0.9734		
Proposed FY 1996:	0.9840	1.0109	1.09
Budget neutrality factor			

PROPOSED FY 1996 UPDATE AND ADJUSTMENTS TO HOSPITAL-SPECIFIC RATES—Continued

		Net adjustment	Percent change
FY 1995:	0.8432		
Proposed FY 1996:	1.0000	1.1860	18.60
Cumulative adjustments			
FY 1995:	0.8457		
Proposed FY 1996:	1.0262	1.2134	21.34

Note: The update factor for the hospital-specific rate is applied cumulatively in determining the rates. Thus, the incremental increase in the update factor from FY 1995 to FY 1996 is 1.0150. In contrast, the exceptions payment adjustment factor and the budget neutrality factor are not applied cumulatively. Thus, for example, the incremental increase in the exceptions reduction factor from FY 1995 to FY 1996 is .9840/.9734, or 1.0109.

C. Calculation of Inpatient Capital-Related Prospective Payments for FY 1996

During the capital prospective payment system transition period, a hospital is paid for the inpatient capital-related costs under one of two alternative payment methodologies: the fully prospective payment methodology or the hold-harmless methodology. The payment methodology applicable to a particular hospital is determined when a hospital comes under the prospective payment system for capital-related costs by comparing its hospital-specific rate to the Federal rate applicable to the hospital's first cost reporting period under the prospective payment system. The applicable Federal rate was determined by adjusting:

- For outliers by dividing the standard Federal rate by the outlier reduction factor for that fiscal year; and,
- For the payment adjustment factors applicable to the hospital (that is, the hospital's geographic adjustment factor, the disproportionate share adjustment factor, and the indirect medical education adjustment factor, when appropriate).

If the hospital-specific rate is above the applicable Federal rate, the hospital is paid under the hold-harmless methodology. If the hospital-specific rate is below the applicable Federal rate, the hospital is paid under the fully prospective methodology.

For purposes of calculating payments for each discharge under both the hold-harmless payment methodology and the fully prospective payment methodology, the standard Federal rate is adjusted as follows: (Standard Federal Rate) × (DRG weight) × (Geographic Adjustment Factor) × (Large Urban Add-on, if applicable) × (COLA adjustment for hospitals located in Alaska and Hawaii) × (1 + Disproportionate Share Adjustment Factor + Indirect Medical Education Adjustment Factor, if applicable). The result is termed the adjusted Federal rate.

Payments under the hold-harmless methodology are determined under one of two formulas. A hold-harmless hospital is paid the higher of:

- 100 percent of the adjusted Federal rate for each discharge; or
- An old capital payment equal to 85 percent (100 percent for sole community hospitals) of the hospital's allowable Medicare inpatient old capital costs per discharge for the cost reporting period plus a new capital payment based on a percentage of the adjusted Federal rate for each discharge. The percentage of the adjusted Federal rate equals the ratio of the hospital's allowable Medicare new capital costs to its total Medicare inpatient capital-related costs in the cost reporting period.

Once a hospital receives payment based on 100 percent of the adjusted Federal rate in a cost reporting period beginning on or after October 1, 1994 (or the first cost reporting period after obligated capital that is recognized as old capital under § 412.302(c) is put in use for patient care, if later), the hospital continues to receive capital prospective payment system payments on that basis for the remainder of the transition period.

Payment for each discharge under the fully prospective methodology is the sum of:

- The hospital-specific rate multiplied by the DRG relative weight for the discharge and by the applicable hospital-specific transition blend percentage for the cost reporting period; and
- The adjusted Federal rate multiplied by the Federal transition blend percentage.

The blend percentages for cost reporting periods beginning in FY 1996 are 50 percent of the adjusted Federal rate and 50 percent of the hospital-specific rate.

In addition, we are proposing that, for discharges on or after October 1, 1995, a hospital that was subject to capital-related tax payments in FY 1992 would receive a dollar add-on to the Federal rate payment as an adjustment for capital-related tax costs. The hospital-specific amount of the adjustment would be determined in accordance with the methodology described in section V.B of the preamble to this proposed rule. During the transition, the hospital-specific dollar add-on amount is multiplied by the Federal rate percentage applicable to the hospital under its transition payment methodology (e.g., 50 percent in FY 1996 for fully prospective hospitals).

Hospitals may also receive outlier payments for those cases that qualify under the thresholds established for each fiscal year. Section 412.312(c) provides for a single set of thresholds to identify outlier cases for both inpatient operating and inpatient capital-related payments. Outlier payments are made only on that portion of the Federal rate that is used to calculate the hospital's inpatient capital-related payments. For fully prospective hospitals, that portion is 50 percent of the Federal rate for discharges occurring in cost reporting periods beginning during FY 1996. Thus, a fully prospective hospital will receive 50 percent of the capital-related outlier payment calculated for the case for discharges occurring in cost reporting periods beginning in FY 1996. For hold-harmless hospitals paid 85 percent of their reasonable costs for old inpatient capital, the portion of the Federal rate that is included in the hospital's outlier payments is based on the hospital's ratio of Medicare inpatient costs for new capital to total Medicare inpatient capital costs. For hold-harmless hospitals that are paid 100 percent of the Federal rate, 100 percent of the Federal rate is included in the hospital's outlier payments.

The outlier thresholds for FY 1996 are published in section II.A.4.c of this Addendum. For FY 1996, a case qualifies as a cost outlier if the cost for the case (after standardization for the indirect teaching adjustment and disproportionate share adjustment) is greater than the prospective payment rate for the DRG plus $16,700. A case qualifies as a day outlier for FY 1996 if the length of stay is greater than the geometric mean length of stay for the

DRG plus the lesser of three standard deviations of the length of stay or 23 days.

During the capital prospective payment system transition period, any hospital may also receive an additional payment under an exceptions process if its total inpatient capital-related payments are less than a minimum percentage of its allowable Medicare inpatient capital-related costs. The minimum payment level is established by class of hospital under § 412.348. The minimum payment levels for portions of cost reporting periods occurring in FY 1996 are:

- Sole community hospitals (located in either an urban or rural area), 90 percent;
- Urban hospitals with at least 100 beds and a disproportionate share patient percentage of at least 20.2 percent and urban hospitals with at least 100 beds that qualify for disproportionate share payments under § 412.106(c)(2), 80 percent; and,
- All other hospitals, 70 percent.

Under § 412.348(d), the amount of the exceptions payment is determined by comparing the cumulative payments made to the hospital under the capital prospective payment system to the cumulative minimum payment levels applicable to the hospital for each cost reporting period subject to that system. Any amount by which the hospital's cumulative payments exceed its cumulative minimum payment is deducted from the additional payment that would otherwise be payable for a cost reporting period.

New hospitals are exempted from the capital prospective payment system for their first 2 years of operation and are paid 85 percent of their reasonable costs during that period. A new hospital's old capital costs are its allowable costs for capital assets that were put in use for patient care on or before the later of December 31, 1990 or the last day of the hospital's base year cost reporting period, and are subject to the rules pertaining to old capital and obligated capital as of the applicable date. Effective with the third year of operation, we will pay the hospital under either the fully prospective methodology, using the appropriate transition blend in that Federal fiscal year, or the hold-harmless methodology. If the hold-harmless methodology is applicable, the hold-harmless payment for assets in use during the base period would extend for 8 years, even if the hold-harmless payments extend beyond the normal transition period.

IV. Proposed Changes for Excluded Hospitals and Hospital Units

A. Proposed Rate-of-Increase Percentages for Excluded Hospitals and Hospital Units

The inpatient operating costs of hospitals and hospital units excluded from the prospective payment system are subject to rate-of-increase limits established under the authority of section 1886(b) of the Act, which is implemented in § 413.40 of the regulations. Under these limits, an annual target amount (expressed in terms of the inpatient operating cost per discharge) is set for each hospital, based on the hospital's own historical cost experience trended forward by the applicable rate-of-increase percentages (update factors). The target amount is multiplied by the number of Medicare discharges in a hospital's cost reporting period, yielding the ceiling on aggregate Medicare inpatient operating costs for the cost reporting period.

Effective with cost reporting periods beginning on or after October 1, 1991, a hospital that has Medicare inpatient operating costs in excess of its ceiling is paid its ceiling plus 50 percent of its costs in excess of the ceiling. Total payment may not exceed 110 percent of the ceiling. A hospital that has inpatient operating costs less than its ceiling is paid its costs plus the lower of—

- Fifty percent of the difference between the allowable inpatient operating costs and the ceiling; or
- Five percent of the ceiling.

Each hospital's target amount is adjusted annually, at the beginning of its cost reporting period, by an applicable rate-of-increase percentage. Section 1886(b)(3)(B) of the Act provides that for cost reporting periods beginning on or after October 1, 1993 and before October 1, 1994, the applicable rate-of-increase percentage is the market basket percentage increase minus the lesser of one percentage point or the percentage point difference between 10 percent and the hospital's ''update adjustment percentage'' except for hospitals with an ''update adjustment percentage'' of at least 10 percent. The rate-of-increase percentage for hospitals in the latter case is the market basket percentage increase. The ''update adjustment percentage'' is the percentage by which a hospital's allowable inpatient operating costs exceeds the hospital's ceiling for the cost reporting period beginning in Federal fiscal year 1990. For cost reporting periods beginning on or after October 1, 1994 and before October 1, 1997, the update adjustment percentage is the update adjustment percentage from the previous year plus the previous year's applicable reduction. The applicable reduction and applicable rate of increase percentage are then determined in the same manner as for FY 1994. The most recent forecasted market basket increase for FY 1996 for hospitals and hospital units excluded from the prospective payment system is 3.6 percent.

V. Tables

This section contains the tables referred to throughout the preamble to this proposed rule and in this addendum. For purposes of this proposed rule, and to avoid confusion, we have retained the designations of Tables 1 through 5 that were first used in the September 1, 1983 initial prospective payment final rule (48 FR 39844). Tables 1a, 1b, 1c, 1d, 3C, 4a, 4b, 4c, 4d, 4e, 5, 6a, 6b, 6c, 6d, 6e, 6f, 6g, 6h, 7A, 7B, 8a, and 8b are presented below. The tables presented below are as follows:

Table 1a—National Adjusted Operating Standardized Amounts, Labor/Nonlabor
Table 1b—Regional Adjusted Operating Standardized Amounts, Labor/Nonlabor
Table 1c—Adjusted Operating Standardized Amounts for Puerto Rico, Labor/Nonlabor
Table 1d—Capital Standard Federal Payment Rate
Table 3C—Hospital Case Mix Indexes for Discharges Occurring in Federal Fiscal Year 1994 and Hospital Average Hourly Wage for Federal Fiscal Year 1996 Wage Index
Table 4a—Wage Index and Capital Geographic Adjustment Factor (GAF) for Urban Areas
Table 4b—Wage Index and Capital Geographic Adjustment Factor (GAF) for Rural Areas
Table 4c—Wage Index and Capital Geographic Adjustment Factor (GAF) for Hospitals That Are Reclassified
Table 4d—Average Hourly Wage for Urban Areas
Table 4e—Average Hourly Wage for Rural Areas
Table 5—List of Diagnosis Related Groups (DRGs), Relative Weighting Factors, Geometric Mean Length of Stay, and Length of Stay Outlier Cutoff Points Used in the Prospective Payment System
Table 6a—New Diagnosis Codes
Table 6b—New Procedure Codes
Table 6c—Invalid Diagnosis Codes
Table 6d—Invalid Procedure Codes
Table 6e—Revised Diagnosis Code Titles
Table 6f—Revised Procedure Code Titles

Table 6g—Additions to the CC Exclusions List
Table 6h—Deletions to the CC Exclusions List
Table 7A—Medicare Prospective Payment System Selected Percentile Lengths of Stay FY 94 MEDPAR Update 12/94 GROUPER V12.0
Table 7B—Medicare Prospective Payment System Selected Percentile Lengths of Stay FY 94 MEDPAR Update 12/94 GROUPER V13.0
Table 8a—Statewide Average Operating Cost-to-Charge Ratios for Urban and Rural Hospitals (Case Weighted) April 1995
Table 8b—Statewide Average Capital Cost-to-Charge Ratios for Urban and Rural Hospitals (Case Weighted) April 1995

TABLE 1a.—NATIONAL ADJUSTED OPERATING STANDARDIZED AMOUNTS, LABOR/NONLABOR

Large urban areas		Other areas	
Labor-related	Nonlabor-related	Labor-related	Nonlabor-related
$2,741.66	$1,098.20	$2,698.26	$1,080.82

TABLE 1b.—REGIONAL ADJUSTED OPERATING STANDARDIZED AMOUNTS, LABOR/NONLABOR

	Large urban areas		Other areas	
	Labor-related	Nonlabor-related	Labor-related	Nonlabor-related
1. New England (CT, ME, MA, NH, RI, VT)	2,874.42	1,151.39	2,828.91	1,133.15
2. Middle Atlantic (PA, NJ, NY)	2,623.32	1,050.80	2,581.79	1,034.16
3. South Atlantic (DE, DC, FL, GA, MD, NC, SC, VA, WV)	2,685.89	1,075.86	2,643.37	1,058.83
4. East North Central (IL, IN, MI, OH, WI)	2,926.74	1,172.34	2,880.40	1,153.77
5. East South Central (AL, KY, MS, TN)	2,538.10	1,016.66	2,497.42	1,000.57
6. West North Central (IA, KS, MN, MO, NE, ND, SD)	2,743.46	1,098.92	2,700.03	1,081.52
7. West South Central (AR, LA, OK, TX)	2,670.25	1,069.60	2,627.98	1,052.66
8. Mountain (AZ, CO, ID, MT, NV, NM, UT, WY)	2,653.09	1,062.72	2,611.08	1,045.90
9. Pacific (AK, CA, HI, OR, WA)	2,712.47	1,086.51	2,669.53	1,069.31

TABLE 1c.—ADJUSTED OPERATING STANDARDIZED AMOUNTS FOR PUERTO RICO, LABOR/NONLABOR

	Large urban areas		Other areas	
	Labor-related	Nonlabor-related	Labor-related	Nonlabor-related
National	$2,714.90	$1,087.48	$2,714.90	$1,087.48
Puerto Rico	2,445.01	509.56	2,406.30	501.49

TABLE 1d.—CAPITAL STANDARD FEDERAL PAYMENT RATE

	Rate
National	$457.11
Puerto Rico	351.61

BILLING CODE 4120–01–P

TABLE 3C : HOSPITAL CASE MIX INDEXES FOR DISCHARGES OCCURRING IN FEDERAL FISCAL YEAR 1994 PAGE 1 OF 16
: HOSPITAL AVERAGE HOURLY WAGE FOR FEDERAL FISCAL YEAR 1996 WAGE INDEX

PROVIDER	CASE MIX INDEX	AVG HOUR WAGE	PROVIDER	CASE MIX INDEX	AVG HOUR WAGE	PROVIDER	CASE MIX INDEX	AVG HOUR WAGE	PROVIDER	CASE MIX INDEX	AVG HOUR WAGE	PROVIDER	CASE MIX INDEX	AVG HOUR WAGE
010001	01.3959	14.47	010095	01.0371	10.66	030004	01.0187	13.06	040003	01.0709	13.33	040105	01.0678	11.86
010004	01.0372	11.54	010097	00.9270	12.23	030006	01.5789	17.32	040004	01.4001	13.84	040106	01.2185	11.16
010005	01.1638	13.61	010098	01.0783	11.19	030007	01.2525	16.55	040005	00.9571	11.37	040107	01.1245	15.18
010006	01.3851	14.23	010099	01.0343	14.74	030008	01.9498	20.06	040007	01.7223	16.81	040109	01.0751	12.13
010007	01.0907	12.03	010100	01.1808	13.72	030009	01.2259	15.42	040008	01.1062	10.87	040114	01.8001	16.23
010008	01.0528	09.78	010101	01.1098	12.72	030010	01.3854	17.40	040010	01.1866	13.08	040116	01.3355	18.71
010009	01.0816	15.37	010102	00.9178	11.42	030011	01.4781	20.19	040011	00.9908	10.41	040118	01.1200	13.58
010010	01.0779	13.64	010103	01.7129	15.44	030012	01.2303	15.06	040013	00.8034	11.75	040119	01.1378	13.45
010011	01.5172	19.92	010104	01.6684	15.84	030013	01.2415	19.04	040014	01.2119	15.72	040124	01.1848	13.61
010012	01.2593	14.67	010108	01.2155	11.76	030014	01.4885	17.79	040015	01.2037	11.77	040126	00.9480	11.00
010015	01.0420	15.13	010109	01.0556	11.54	030016	01.3308	16.82	040016	01.7197	15.81	040132	00.8500	14.00
010016	01.1881	14.74	010110	00.9493	12.21	030017	01.3992	18.43	040017	01.2198	10.52	050002	01.5709	26.17
010018	00.9526	15.60	010112	01.0995	13.96	030018	01.7253	17.74	040018	01.2115	15.74	050006	01.3963	19.22
010019	01.2773	13.87	010113	01.6264	13.09	030019	01.2437	18.78	040019	01.1142	11.20	050007	01.5861	26.30
010021	01.2581	13.21	010114	01.3115	15.41	030022	01.4769	17.25	040020	01.4979	13.74	050008	01.4408	24.86
010022	01.0259	15.65	010115	00.8519	10.12	030023	01.2912	16.24	040021	01.2138	15.42	050009	01.6637	.
010023	01.3825	14.42	010117	00.9324	18.73	030024	01.7634	18.47	040022	01.8008	14.21	050013	01.8529	20.87
010024	01.3739	15.01	010118	01.2249	15.42	030025	01.1006	13.38	040024	01.0183	11.62	050014	01.1459	22.82
010025	01.3773	12.75	010119	01.2576	15.12	030027	01.1197	14.29	040025	00.9355	10.69	050015	01.4370	20.74
010027	00.8467	13.11	010120	00.9997	13.93	030030	01.6972	20.88	040026	01.5498	15.05	050016	01.1479	14.51
010029	01.4692	14.06	010121	01.1901	14.23	030033	01.2137	15.50	040027	01.2679	12.06	050017	02.0879	24.17
010031	01.2492	13.51	010123	01.2326	16.17	030034	01.1710	15.72	040028	01.0221	10.19	050018	01.2512	18.71
010032	00.9781	13.69	010124	01.2770	15.36	030035	01.3020	19.44	040029	01.2008	13.07	050021	01.3595	21.85
010033	01.8704	17.15	010125	01.0427	12.25	030036	01.1298	17.49	040030	00.8898	11.86	050022	01.5020	23.45
010034	01.0136	12.69	010126	01.1167	12.41	030037	01.9274	19.15	040032	01.0069	10.37	050024	01.3479	23.48
010035	01.2174	14.72	010127	01.4867	16.01	030038	01.5051	17.78	040035	00.9964	09.69	050025	01.7154	21.46
010036	01.1377	15.26	010128	01.0329	10.97	030040	00.9842	15.24	040036	01.4025	15.86	050026	01.4265	20.43
010038	01.2311	16.54	010129	01.0697	13.39	030041	00.9526	16.41	040037	01.1121	11.56	050028	01.4067	15.18
010039	01.6223	15.05	010130	01.0481	15.47	030043	01.1730	17.72	040039	01.2253	11.89	050029	01.2859	25.93
010040	01.4671	17.28	010131	01.2537	17.42	030044	00.9883	13.57	040040	01.1738	17.12	050030	01.2800	19.28
010043	01.0559	12.55	010134	00.8414	12.38	030046	01.0515	16.87	040041	01.3385	14.18	050032	01.2636	23.23
010044	00.9550	12.54	010137	01.2258	15.71	030047	00.9332	18.93	040042	01.2993	12.26	050033	01.4003	24.74
010045	01.1359	11.95	010138	00.9878	09.88	030049	00.9560	14.29	040044	00.8762	10.10	050036	01.7562	20.22
010046	01.4551	13.93	010139	01.6128	20.00	030054	00.9290	12.19	040045	01.0710	13.23	050038	01.3295	27.09
010047	01.0648	08.72	010143	01.1769	16.12	030055	01.2171	16.00	040047	01.0323	14.05	050039	01.5939	20.28
010049	01.1107	14.18	010144	01.2999	15.54	030059	01.3361	20.15	040048	01.1792	13.54	050040	01.2836	22.38
010050	01.0161	11.94	010145	01.2146	15.36	030060	01.1085	13.06	040050	01.1433	11.01	050041	01.3643	21.76
010051	00.8333	09.81	010146	01.1630	15.74	030061	01.5947	16.25	040051	01.1134	10.19	050042	01.2516	20.06
010052	00.9533	11.56	010148	00.9497	10.54	030062	01.2648	14.57	040053	01.1242	12.40	050043	01.5384	27.78
010053	01.0569	12.58	010149	01.3417	15.90	030064	01.6292	16.62	040054	01.0771	11.90	050045	01.3018	17.13
010054	01.1534	15.11	010150	01.0130	13.86	030065	01.6031	18.78	040055	01.4487	14.05	050046	01.1743	24.46
010055	01.4319	14.98	010152	01.3340	15.42	030067	01.0537	15.23	040058	01.2345	13.05	050047	01.6762	28.05
010056	01.4019	17.28	010155	00.9579	09.48	030068	00.9661	13.23	040060	00.9541	12.70	050051	01.0963	17.38
010058	01.0172	12.39	020001	01.5180	25.13	030069	01.3602	16.55	040062	01.5193	14.64	050052	01.1447	.
010059	01.0345	13.89	020002	00.9978	24.19	030071	00.9437	.	040063	01.4980	14.95	050054	01.1555	19.64
010061	00.9679	13.39	020004	01.1279	23.34	030072	00.8611	.	040064	00.9431	09.57	050055	01.4063	29.68
010062	01.0026	11.97	020005	00.9082	23.80	030073	01.0794	.	040066	01.0801	13.90	050056	01.3700	23.16
010064	01.7797	17.06	020006	01.1719	21.93	030074	00.8462	.	040067	01.1364	11.31	050057	01.4635	20.04
010065	01.3683	14.14	020007	00.8580	17.74	030075	00.8619	.	040069	01.0664	13.04	050058	01.4520	21.76
010066	00.9186	09.11	020008	00.9988	26.80	030076	00.8683	.	040070	00.9414	13.28	050060	01.5693	19.17
010068	01.2298	20.35	020009	00.9487	19.88	030077	00.8113	.	040071	01.4645	14.82	050061	01.3687	22.38
010069	01.0775	13.08	020010	01.0739	18.60	030078	01.1179	.	040072	01.1254	14.24	050063	01.4319	21.08
010072	01.2015	12.45	020011	01.0898	21.26	030079	00.8091	.	040074	01.3158	13.79	050065	01.6075	22.56

010073	00.8999	10.82	020012	01.2954	22.82	030080	01.6618	21.27	040075	01.0436	10.99	050066	01.2549	24.33
010078	01.1663	15.06	020013	00.8540	21.66	030083	01.3690	21.02	040076	01.0433	13.39	050067	01.4064	21.52
010079	01.1116	14.51	020014	01.3040	19.97	030084	01.0123	.	040077	00.8746	10.34	050068	01.2501	18.33
010080	00.9627	13.13	020017	01.4063	25.88	030085	01.4961	17.30	040078	01.4154	15.29	050069	01.5984	23.54
010081	01.9637	16.46	020018	00.9100	.	030086	01.2412	18.35	040080	01.0211	14.94	050070	01.3026	28.61
010083	01.0398	12.57	020019	00.8760	.	030087	01.5977	17.23	040081	00.8759	09.81	050071	01.3027	28.82
010084	01.3702	15.98	020020	00.6486	.	030088	01.3663	18.08	040082	01.2339	12.53	050072	01.3189	29.34
010085	01.2531	15.87	020021	00.9016	.	030089	01.4446	18.51	040084	01.0993	14.26	050073	01.2545	29.15
010086	00.9868	13.22	020024	01.0717	22.25	030092	01.5493	17.57	040085	01.2544	14.29	050074	01.0874	31.09
010087	01.7680	16.49	020025	01.0403	21.61	030093	01.3513	17.76	040088	01.3552	13.12	050075	01.3389	28.82
010089	01.1279	15.32	020026	01.2701	.	030094	01.3559	17.83	040090	00.9676	11.94	050076	01.6608	29.00
010090	01.5513	15.76	020027	00.9668	.	030095	01.1288	14.39	040091	01.2667	17.58	050077	01.5842	22.97
010091	00.9577	12.37	030001	01.2945	19.25	030097	01.0287	.	040093	00.9756	10.17	050078	01.3900	22.72
010092	01.3737	14.97	030002	01.8159	20.27	040001	01.1704	11.25	040095	00.8388	11.17	050079	01.5489	29.43
010094	01.1703	17.54	030003	01.7310	19.73	040002	01.1862	12.07	040100	01.1611	13.63	050080	01.2776	23.03

TABLE 3C : HOSPITAL CASE MIX INDEXES FOR DISCHARGES OCCURRING IN FEDERAL FISCAL YEAR 1994 PAGE 2 OF 16
: HOSPITAL AVERAGE HOURLY WAGE FOR FEDERAL FISCAL YEAR 1996 WAGE INDEX

PROVIDER	CASE MIX INDEX	AVG HOUR WAGE	PROVIDER	CASE MIX INDEX	AVG HOUR WAGE	PROVIDER	CASE MIX INDEX	AVG HOUR WAGE	PROVIDER	CASE MIX INDEX	AVG HOUR WAGE	PROVIDER	CASE MIX INDEX	AVG HOUR WAGE
050081	01.6691	21.10	050177	01.2290	18.24	050286	00.9302	26.63	050407	01.3582	26.56	050528	01.1976	16.76
050082	01.4772	21.26	050179	01.2394	16.57	050289	01.7507	25.91	050410	01.1102	16.16	050531	01.2065	19.97
050084	01.5859	21.46	050180	01.5412	30.93	050290	01.5207	24.38	050411	01.3939	28.60	050534	01.3905	23.99
050088	01.0832	21.32	050181	01.3014	.	050291	01.2749	24.17	050414	01.2987	24.04	050535	01.5052	22.35
050089	01.3280	19.83	050183	01.2363	19.25	050292	01.1509	21.25	050417	01.2298	18.53	050537	01.2233	21.30
050090	01.3260	19.87	050186	01.3298	24.64	050293	00.8257	19.92	050418	01.3459	23.95	050539	01.1563	22.82
050091	01.1739	21.63	050188	01.4107	25.19	050295	01.4002	20.72	050419	01.3007	18.33	050541	01.5437	28.97
050092	00.9059	16.84	050189	00.9558	22.45	050296	01.2980	23.78	050420	01.4733	24.40	050542	01.1773	15.76
050093	01.5559	20.79	050191	01.5920	21.31	050298	01.2353	16.65	050421	01.4301	24.17	050543	00.9071	24.31
050095	00.9300	29.05	050192	01.2079	18.66	050299	01.3015	22.49	050423	01.0343	17.53	050545	00.8617	21.07
050096	01.0909	18.14	050193	01.4078	23.10	050300	01.2656	18.73	050424	01.7339	24.12	050546	00.8271	21.43
050097	01.4274	19.13	050194	01.2006	25.22	050301	01.4337	21.30	050425	01.2398	27.86	050547	00.9040	22.13
050099	01.4827	22.03	050195	01.5580	29.15	050302	01.3524	23.57	050426	01.3310	22.18	050549	01.7697	25.56
050100	01.8951	22.92	050196	01.4055	18.09	050305	01.6063	27.60	050427	00.9355	22.53	050550	02.3330	21.44
050101	01.4194	24.82	050197	01.8908	27.84	050307	01.3911	20.66	050430	00.9285	15.31	050551	01.3403	23.83
050102	01.5160	21.67	050199	00.9718	22.01	050308	01.5399	28.06	050431	01.1265	20.82	050552	01.3271	20.13
050103	01.6042	28.14	050204	01.3886	22.44	050309	01.3788	23.19	050432	01.5942	23.40	050557	01.5771	21.72
050104	01.3540	21.95	050205	01.4009	19.74	050310	01.2782	20.36	050433	01.0529	17.20	050559	01.3782	22.56
050107	01.4074	20.13	050207	01.3163	20.06	050312	01.8590	23.07	050434	01.1785	17.00	050560	01.5718	22.35
050108	01.5736	22.46	050208	01.2815	27.22	050313	01.2384	20.05	050435	01.2924	16.47	050561	01.2111	29.11
050109	02.2118	24.11	050211	01.3754	25.67	050315	01.3006	20.58	050436	00.9911	15.70	050564	01.2874	25.38
050110	01.2613	20.72	050213	01.4315	19.75	050317	01.2328	19.58	050438	01.6072	23.36	050565	01.2728	21.03
050111	01.3060	18.52	050214	01.5551	23.00	050320	01.3170	32.07	050440	01.3916	18.93	050566	00.9860	13.94
050112	01.5147	22.87	050215	01.5297	25.76	050324	01.8055	23.27	050441	01.8450	27.68	050567	01.5876	21.00
050113	01.3064	26.77	050217	01.3173	17.43	050325	01.2297	20.80	050443	00.9398	14.95	050568	01.3248	22.17
050114	01.4354	25.48	050219	01.2936	20.45	050327	01.5933	21.01	050444	01.3494	23.83	050569	01.4295	21.89
050115	01.5146	21.57	050222	01.5300	22.83	050328	01.5356	27.69	050446	00.8871	17.23	050570	01.5840	24.67
050116	01.4910	22.96	050224	01.5550	21.12	050329	01.2911	15.76	050447	01.0899	16.92	050571	01.3208	26.14
050117	01.3267	18.74	050225	01.3790	20.48	050331	01.4408	28.29	050448	01.0637	18.59	050573	01.6206	22.10
050118	01.2177	23.13	050226	01.3603	21.59	050333	00.9710	17.95	050449	01.3122	20.99	050575	01.2499	23.34
050121	01.5407	20.07	050228	01.4398	28.72	050334	01.5781	28.97	050454	01.7985	26.50	050577	01.3945	21.47
050122	01.6417	23.24	050230	01.3637	26.71	050335	01.2437	20.84	050455	01.8533	21.11	050578	01.2672	24.09
050124	01.2679	22.77	050231	01.6520	22.19	050336	01.2946	19.40	050456	01.2206	21.52	050579	01.5393	27.06
050125	01.3507	24.50	050232	01.8188	25.50	050337	01.2519	26.55	050457	01.9351	28.03	050580	01.4093	22.20
050126	01.4228	24.72	050233	01.2215	23.64	050342	01.4042	17.43	050458	00.7146	23.76	050581	01.4125	24.32
050127	01.2784	22.28	050234	01.3560	18.84	050343	01.1146	16.91	050459	01.1620	28.15	050583	01.6101	21.83
050128	01.5380	20.73	050235	01.4870	23.84	050348	01.6136	24.65	050464	01.8476	22.87	050584	01.2717	22.37
050129	01.4985	21.49	050236	01.5406	24.67	050349	00.9490	13.96	050468	01.3430	15.80	050585	01.3338	22.76
050131	01.2934	25.95	050238	01.5059	19.87	050350	01.3831	21.49	050469	01.1374	17.19	050586	01.3463	22.75
050132	01.3628	19.85	050239	01.5173	21.99	050351	01.4779	27.25	050470	01.1137	19.37	050587	01.2709	20.16
050133	01.3706	20.11	050240	01.4416	23.58	050352	01.2780	22.36	050471	01.6748	23.33	050588	01.2771	27.21
050135	01.2478	26.85	050241	01.3186	26.52	050353	01.5817	20.14	050476	01.2488	19.26	050589	01.3337	24.60
050136	01.4279	21.96	050242	01.3719	26.92	050355	00.9653	15.90	050477	01.4087	27.66	050590	01.4064	.
050137	01.3740	30.43	050243	01.5534	24.82	050357	01.7895	21.18	050478	00.9987	22.01	050591	01.1726	20.64
050138	01.7732	31.18	050245	01.3499	21.94	050359	01.0412	19.35	050481	01.4256	25.61	050592	01.3813	23.45
050139	01.3254	29.35	050248	01.1096	24.57	050360	01.5180	31.61	050482	00.9617	18.35	050593	01.5582	25.60
050140	01.4137	29.84	050251	01.1101	16.23	050366	01.2756	20.46	050483	01.1917	26.34	050594	02.0565	23.12
050144	01.6516	22.42	050253	00.8743	18.00	050367	01.2999	26.14	050485	01.5985	21.94	050597	01.2327	21.75
050145	01.3451	26.85	050254	01.1387	22.57	050369	01.3040	23.37	050486	01.4350	23.44	050598	01.4341	25.33
050146	01.3762	.	050256	01.8912	19.43	050373	01.3590	23.22	050488	01.4137	27.49	050599	01.7107	22.85
050147	00.7118	20.96	050257	01.2016	17.89	050376	01.3440	25.07	050489	01.0675	23.36	050601	01.3000	30.28
050148	01.0702	17.09	050260	00.9788	21.22	050377	00.9441	16.99	050491	01.1820	26.44	050603	01.4443	22.96
050149	01.3631	22.36	050261	01.1648	17.18	050378	01.1612	22.91	050492	01.1855	20.52	050604	01.5386	27.42

050150	01.3115	21.41
050152	01.4044	25.24
050153	01.6164	29.55
050154	01.0994	21.81
050155	01.1539	19.97
050158	01.5597	26.71
050159	01.2340	26.10
050167	01.3550	22.09
050168	01.5947	23.78
050169	01.5245	23.32
050170	01.5051	21.45
050172	01.3086	.
050173	01.2170	22.01
050174	01.7043	25.94
050175	01.3303	23.42
050262	01.8349	25.71
050263	01.2550	26.81
050264	01.4331	26.35
050267	01.5697	24.29
050270	01.3264	22.68
050272	01.3607	19.69
050274	01.0960	18.11
050276	01.2571	.
050277	01.3181	21.80
050278	01.4977	21.13
050279	01.2244	20.51
050280	01.6357	22.36
050281	01.4794	.
050282	01.3473	22.75
050283	01.3323	26.46
050379	01.0648	18.39
050380	01.6367	26.54
050382	01.3812	23.92
050385	01.4412	26.34
050388	00.9443	14.21
050390	01.2414	21.06
050391	01.3412	19.68
050392	00.9810	16.53
050393	01.3927	22.22
050394	01.5262	22.04
050396	01.5531	21.13
050397	01.0745	17.88
050401	01.2000	15.64
050404	01.1324	13.84
050406	01.1223	14.65
050494	01.1573	23.56
050496	01.7266	29.82
050497	00.8927	11.78
050498	01.2746	21.87
050502	01.6616	21.87
050503	01.3329	22.11
050506	01.4572	24.09
050510	01.3655	28.74
050512	01.3698	29.78
050515	01.3294	29.34
050516	01.6462	23.36
050517	01.2703	19.52
050522	01.3852	29.90
050523	01.2191	25.91
050526	01.3586	25.43
050607	01.3435	19.27
050608	01.1898	15.26
050609	01.3379	30.43
050613	01.0786	22.87
050615	01.4504	21.15
050616	01.2743	20.76
050618	01.0235	16.48
050623	01.2062	23.19
050624	01.2544	26.72
050625	01.5807	23.29
050630	01.2449	21.58
050633	01.2678	21.41
050635	01.3387	29.38
050636	01.3357	21.81
050637	01.0648	.

TABLE 3C : HOSPITAL CASE MIX INDEXES FOR DISCHARGES OCCURRING IN FEDERAL FISCAL YEAR 1994 PAGE 3 OF 16
: HOSPITAL AVERAGE HOURLY WAGE FOR FEDERAL FISCAL YEAR 1996 WAGE INDEX

PROVIDER	CASE MIX INDEX	AVG HOUR WAGE	PROVIDER	CASE MIX INDEX	AVG HOUR WAGE	PROVIDER	CASE MIX INDEX	AVG HOUR WAGE	PROVIDER	CASE MIX INDEX	AVG HOUR WAGE	PROVIDER	CASE MIX INDEX	AVG HOUR WAGE
050638	00.9513	24.17	060034	01.5026	17.52	070031	01.3016	19.23	100056	01.4902	20.15	100147	01.0929	13.00
050641	01.2113	15.87	060036	01.1814	12.48	070033	01.2996	24.24	100057	01.3746	15.39	100150	01.2811	16.60
050643	00.8759	.	060037	01.0513	12.26	070034	01.3455	24.14	100059	00.9153	16.30	100151	01.7807	18.68
050644	00.9886	24.48	060038	01.0298	11.85	070035	01.3913	22.12	100060	01.7346	16.88	100154	01.6457	18.00
050660	01.2893	.	060041	00.8924	15.38	070036	01.3236	25.69	100061	01.5115	20.27	100156	01.1415	17.50
050661	00.9135	20.77	060042	00.9433	17.68	070038	00.9919	.	100062	01.7465	16.21	100157	01.6035	18.71
050662	00.8546	21.30	060043	01.0013	14.76	080001	01.6451	23.28	100063	01.2235	15.65	100159	01.0356	14.28
050663	01.1175	22.11	060044	01.1492	14.89	080002	01.2515	16.99	100067	01.3714	15.72	100160	01.0643	17.34
050666	00.7677	23.70	060046	01.1278	15.46	080003	01.3056	19.41	100068	01.4322	17.17	100161	01.5583	19.20
050667	01.1815	23.89	060047	01.1030	09.96	080004	01.3232	16.96	100069	01.5064	15.21	100162	01.4186	16.74
050668	01.2194	26.93	060049	01.2137	17.19	080005	01.3131	15.82	100070	01.4351	17.16	100165	01.2367	13.51
050671	01.6203	27.00	060050	01.2618	13.15	080006	01.3760	16.42	100071	01.2744	15.51	100166	01.4693	19.88
050672	00.6387	21.17	060052	01.1243	12.88	080007	01.2801	17.44	100072	01.2503	16.94	100167	01.4158	20.48
050674	01.2503	28.12	060053	00.9362	12.60	090001	01.4590	19.94	100073	01.7634	20.14	100168	01.3776	18.09
050675	01.7002	15.00	060054	01.3462	15.54	090002	01.1401	15.96	100074	01.2355	19.00	100169	01.8757	18.22
050676	00.9870	13.25	060056	00.9139	12.65	090003	01.3397	21.55	100075	01.6373	16.40	100170	01.4109	15.90
050677	01.3406	31.88	060057	01.0334	20.40	090004	01.6208	22.45	100076	01.3988	16.53	100172	01.3596	13.54
050678	01.1803	24.63	060058	00.8997	10.18	090005	01.2734	25.02	100077	01.3386	15.66	100173	01.5816	15.44
050680	01.2560	25.39	060060	00.9640	12.38	090006	01.3244	19.62	100078	01.1736	14.56	100174	01.4712	18.74
050682	00.9270	16.66	060062	00.9894	12.82	090007	01.4712	19.96	100079	01.4670	18.80	100175	01.1006	15.14
050684	01.1727	21.47	060063	01.0031	11.07	090008	01.5672	23.02	100080	01.5378	18.08	100176	01.9885	25.81
050685	01.2634	27.06	060064	01.3866	20.49	090010	00.9308	20.65	100081	01.1718	12.91	100177	01.3315	17.48
050686	01.3618	30.25	060065	01.3772	17.83	090011	01.9915	23.92	100082	01.5681	16.76	100179	01.6277	17.87
050688	01.2061	28.36	060066	00.9635	12.11	100001	01.5552	.	100083	01.3813	16.09	100180	01.4826	16.54
050689	01.4381	28.59	060068	01.1327	14.76	100002	01.4607	18.36	100084	01.5160	16.83	100181	01.4195	15.91
050690	01.3961	27.85	060070	01.1131	15.55	100004	01.0642	11.43	100085	01.3550	19.23	100183	01.3410	17.45
050693	01.5142	27.22	060071	01.2616	13.96	100005	01.0165	17.36	100086	01.3843	20.43	100186	01.3892	14.90
050694	01.4425	21.79	060072	00.9310	.	100006	01.6438	16.90	100087	01.7370	19.99	100187	01.4438	19.93
050695	01.1134	24.12	060073	01.0152	14.30	100007	01.8018	18.70	100088	01.7186	16.94	100189	01.2662	21.83
050696	02.1816	26.95	060075	01.2260	18.89	100008	01.7117	19.32	100090	01.3590	15.22	100191	01.3232	18.97
050697	01.1362	16.30	060076	01.3839	16.07	100009	01.5528	19.83	100092	01.5157	17.11	100199	01.2977	18.97
050698	01.3958	21.28	060085	00.9265	10.79	100010	01.4431	19.21	100093	01.4372	14.09	100200	01.3793	21.22
050699	00.8276	.	060087	01.6314	20.20	100012	01.6369	17.94	100098	01.1755	16.49	100203	01.1241	18.76
050700	01.5071	30.13	060088	00.9743	13.54	100014	01.2436	17.55	100099	01.2235	15.33	100204	01.5977	17.77
050701	01.3467	27.27	060090	00.9245	14.20	100015	01.3107	16.81	100102	01.0678	15.80	100206	01.3464	20.26
050702	00.9270	16.26	060096	00.9561	19.72	100017	01.5788	16.31	100103	01.1144	15.50	100207	01.4231	23.04
050704	01.1743	.	060100	01.3751	20.85	100018	01.3237	18.69	100105	01.4168	17.66	100208	01.5538	18.48
050705	00.6755	.	060103	01.2075	20.37	100019	01.5023	18.79	100106	01.0504	14.76	100209	01.5997	22.01
050706	00.8663	.	060104	01.3092	19.86	100020	01.3143	19.55	100107	01.3179	17.58	100210	01.7124	15.89
050707	00.8745	.	060106	01.4032	.	100022	01.6617	22.31	100108	01.1079	15.65	100211	01.3219	17.57
050708	00.9008	.	070001	01.7328	23.62	100023	01.3776	15.61	100109	01.3214	16.41	100212	01.6272	18.04
060001	01.5057	17.31	070002	01.8130	24.21	100024	01.4216	18.53	100110	01.4016	16.69	100213	01.5983	17.94
060003	01.3094	16.54	070003	01.1687	24.23	100025	01.6525	15.42	100112	01.0019	11.56	100217	01.2336	18.31
060004	01.1485	18.71	070004	01.1513	23.01	100026	01.6193	15.32	100113	02.1296	16.92	100220	01.8430	19.78
060006	01.1421	16.47	070005	01.3243	24.75	100027	00.9438	10.01	100114	01.4677	17.68	100221	01.4376	18.35
060007	01.2230	12.87	070006	01.3687	25.94	100028	01.2991	16.01	100117	01.3079	17.02	100222	01.3487	16.57
060008	00.9867	13.68	070007	01.3746	22.95	100029	01.3817	18.94	100118	01.3122	16.43	100223	01.4705	16.34
060009	01.4339	19.83	070008	01.2779	22.85	100030	01.3097	17.44	100121	01.2693	14.78	100224	01.4544	18.76
060010	01.5760	21.01	070009	01.2466	23.96	100032	01.9679	17.17	100122	01.3441	15.71	100225	01.3745	19.52
060011	01.2259	18.74	070010	01.4483	22.35	100034	01.7891	17.67	100124	01.4071	18.25	100226	01.3634	17.20
060012	01.4254	16.50	070011	01.2735	22.16	100035	01.6262	16.28	100125	01.0921	16.78	100227	01.0080	17.78
060013	01.2762	17.06	070012	01.1872	22.30	100038	01.6765	20.22	100126	01.4394	18.61	100228	01.2566	18.85
060014	01.7239	20.66	070013	01.3431	23.92	100039	01.7019	20.59	100127	01.5854	18.03	100229	01.3336	17.11

060015	01.5998	18.45	070015	01.3813	23.42	100040	01.6911	16.11	100128	02.1550	19.42	100230	01.3662	18.43
060016	01.1618	12.48	070016	01.3211	24.30	100042	01.6055	20.23	100129	01.2985	17.71	100231	01.6860	17.03
060018	01.2276	14.91	070017	01.4156	23.47	100043	01.4265	19.94	100130	01.1883	17.18	100232	01.2234	17.96
060020	01.4951	15.53	070018	01.4187	25.83	100044	01.4438	18.62	100131	01.3122	19.27	100234	01.6129	18.45
060022	01.7446	16.71	070019	01.2689	23.06	100045	01.4420	17.72	100132	01.4115	15.18	100235	01.4308	16.20
060023	01.5177	17.84	070020	01.4243	23.64	100046	01.5114	16.91	100134	01.2631	14.50	100236	01.4557	17.68
060024	01.7198	21.41	070021	01.3009	25.55	100047	01.7863	21.76	100135	01.4739	15.53	100237	02.1826	22.74
060026	01.4238	18.59	070022	01.6939	24.10	100048	00.9571	11.55	100137	01.2763	16.08	100238	01.4228	16.85
060027	01.5295	19.14	070024	01.3208	21.90	100049	01.3156	16.74	100138	00.9692	11.92	100239	01.4534	18.66
060028	01.4642	20.00	070025	01.6821	23.66	100050	01.2740	15.06	100139	01.0335	15.70	100240	00.8513	14.86
060029	01.0345	14.09	070026	01.1169	23.44	100051	01.2295	16.21	100140	01.1774	16.00	100241	00.9123	12.29
060030	01.3139	18.40	070027	01.2443	24.05	100052	01.4053	14.82	100142	01.1857	16.26	100242	01.4055	15.55
060031	01.5019	18.31	070028	01.4662	22.94	100053	01.3250	16.23	100144	01.2253	11.06	100243	01.4677	16.92
060032	01.4379	20.01	070029	01.2871	20.71	100054	01.3006	17.88	100145	01.4695	12.24	100244	01.3853	17.40
060033	01.1419	11.24	070030	01.2544	23.06	100055	01.3744	17.82	100146	01.1486	14.10	100246	01.3244	20.75

TABLE 3C : HOSPITAL CASE MIX INDEXES FOR DISCHARGES OCCURRING IN FEDERAL FISCAL YEAR 1994 PAGE 4 OF 16
: HOSPITAL AVERAGE HOURLY WAGE FOR FEDERAL FISCAL YEAR 1996 WAGE INDEX

PROVIDER	CASE MIX INDEX	AVG HOUR WAGE
100248	01.6333	18.68
100249	01.3103	18.19
100252	01.1810	18.33
100253	01.3864	18.25
100254	01.5021	16.89
100255	01.2986	20.20
100256	01.8142	19.59
100258	01.6478	21.05
100259	01.4103	16.77
100260	01.4002	19.49
100262	01.4009	18.35
100263	01.4194	16.60
100264	01.3943	16.33
100265	01.2979	17.52
100266	01.2214	15.99
100267	01.2954	19.18
100268	01.2181	22.57
100269	01.3792	21.84
100270	00.8849	08.60
100271	01.7929	16.19
100273	01.1571	17.33
100275	01.5124	21.10
100276	01.3274	21.04
100277	01.0716	13.45
100278	00.8470	17.64
100279	01.4012	19.25
100280	01.4138	17.91
100281	01.2724	20.07
100282	01.1045	.
100283	01.2056	.
110001	01.2818	16.74
110002	01.2043	14.85
110003	01.3071	12.29
110004	01.2459	16.00
110005	01.2256	17.68
110006	01.3280	17.10
110007	01.4068	15.73
110008	01.1752	14.50
110009	01.0432	15.28
110010	02.0423	23.06
110011	01.2554	15.54
110013	01.1134	13.82
110014	01.0739	13.26
110015	01.2799	16.72
110016	01.2241	14.43
110017	00.9515	11.20
110018	01.1889	15.66
110020	01.2039	17.27
110023	01.2959	16.89
110024	01.4133	16.46
110025	01.4161	15.36
110026	01.1930	13.12
110027	01.0803	10.63
110043	01.6236	14.42
110044	01.1733	13.21
110045	01.2497	21.95
110046	01.1798	15.37
110048	01.2608	13.55
110049	01.0207	14.46
110050	01.0612	12.45
110051	00.9820	16.34
110052	00.8783	14.34
110054	01.2756	15.52
110056	01.0718	11.70
110059	01.2391	12.40
110061	01.0318	10.53
110062	00.9504	10.27
110063	01.0492	11.52
110064	01.2637	15.88
110065	01.0514	11.99
110066	01.3113	15.99
110069	01.1373	16.05
110070	00.9925	10.92
110071	00.9781	08.89
110072	01.0414	12.39
110073	01.2550	12.73
110074	01.4525	17.20
110075	01.1963	14.67
110076	01.3719	18.20
110078	01.6373	20.48
110079	01.3828	19.71
110080	01.1482	16.19
110082	02.0383	20.82
110083	01.6285	20.25
110086	01.1602	13.70
110087	01.2631	18.36
110088	01.0853	10.58
110089	01.1968	14.54
110091	01.3526	17.32
110092	01.0979	12.26
110093	00.9462	09.30
110094	01.0224	11.93
110095	01.2616	12.81
110096	01.0956	12.34
110097	01.0514	14.03
110098	01.0324	12.30
110100	01.0596	11.30
110101	01.0744	10.28
110103	00.9393	09.39
110104	01.1714	12.01
110105	01.0764	14.09
110107	01.7497	17.13
110108	01.0831	10.44
110109	01.1126	13.54
110111	01.0991	13.66
110112	00.9809	15.61
110135	01.1373	12.78
110136	01.1541	17.56
110140	00.8071	16.43
110141	00.8803	10.46
110142	01.0384	11.73
110143	01.3235	18.71
110144	01.1503	12.85
110146	00.9501	12.45
110149	01.0671	11.53
110150	01.3269	15.62
110152	01.1220	12.64
110153	00.9572	16.74
110154	00.9792	13.79
110155	01.1841	14.04
110156	00.9752	12.03
110157	01.0800	.
110161	01.2331	19.75
110162	00.8832	.
110163	01.3618	18.05
110164	01.4385	18.67
110165	01.3315	17.68
110166	01.5036	16.62
110168	01.6389	19.01
110169	00.6684	19.82
110171	01.3971	21.21
110172	01.2175	.
110174	01.0008	13.50
110176	01.0946	19.01
110177	01.4740	18.73
110178	01.0683	19.58
110179	01.2103	21.20
110181	00.9615	11.66
110183	01.3983	18.69
110184	01.1402	17.71
110185	01.1405	12.05
110186	01.2503	15.64
110187	01.1390	17.43
110188	01.4765	17.46
110189	01.2079	18.59
110190	01.1352	13.01
110191	01.3089	17.98
110192	01.3411	20.20
110193	01.1623	15.60
110194	00.9469	12.58
110195	01.1317	10.00
110198	01.3741	22.76
110200	01.9354	15.32
110201	01.3741	16.18
110203	00.9961	15.24
110204	00.7928	16.64
110205	01.0694	13.28
110207	01.0579	13.48
110208	00.9113	12.52
120016	00.9057	20.47
120018	00.9883	19.81
120019	01.1469	18.50
120021	00.9582	20.79
120022	01.6824	16.62
120025	00.9278	18.26
120026	01.2740	21.37
120027	01.4552	20.92
130001	00.9708	15.35
130002	01.3378	14.89
130003	01.2445	17.84
130005	01.4065	17.29
130006	01.8199	16.88
130007	01.5496	17.22
130008	00.9098	11.92
130009	00.9497	15.96
130010	01.0162	14.43
130011	01.2647	15.29
130012	01.0033	17.91
130013	01.2915	18.48
130014	01.3606	16.02
130015	00.8430	11.94
130016	00.8829	16.82
130017	01.1709	14.13
130018	01 6849	18.13
130019	01.1462	13.98
130021	00.9362	10.36
130022	01.2911	15.84
130024	01.0023	15.03
130025	01.1082	16.20
130026	01.1565	16.79
130027	00.8942	16.96
130028	01.2027	15.05
130029	01.0385	15.58
130030	01.0256	14.67
130031	01.0606	11.89
130034	01.0409	14.58
130035	00.9446	13.51
130036	01.2453	09.19
130037	01.1669	15.01
130043	01.0377	14.00
130044	01.0655	10.65
130045	01.0039	12.30
130048	01.0330	09.62
130049	01.2155	16.73
130054	00.9386	18.69
130056	00.9020	09.97
130058	01.0275	13.32
130060	01.2343	17.97
140001	01.2418	14.58
140002	01.3089	16.16
140003	01.0232	12.69
140004	01.0097	14.64
140027	01.2769	15.39
140029	01.2979	18.41
140030	01.5388	20.92
140031	01.1850	12.51
140032	01.2811	15.20
140033	01.2426	17.93
140034	01.1628	15.79
140035	01.0560	11.09
140036	01.1483	14.67
140037	00.9951	11.93
140038	01.1775	15.57
140039	00.9726	12.57
140040	01.2410	13.67
140041	01.1636	15.42
140042	01.0257	13.28
140043	01.2456	15.96
140045	00.9755	12.36
140046	01.2947	15.06
140047	01.1553	12.83
140048	01.3215	21.62
140049	01.5655	18.55
140051	01.4191	19.71
140052	01.3266	15.64
140053	01.8312	17.25
140054	01.3139	22.79
140055	00.9764	13.01
140058	01.1705	14.76
140059	01.1451	13.34
140061	01.0912	13.15
140062	01.2771	21.56
140063	01.3580	20.34
140064	01.2340	15.63
140065	01.4652	23.04
140066	01.2980	13.04
140067	01.8046	17.15
140068	01.3822	17.79
140069	01.0904	14.27
140070	01.3467	15.36
140074	01.0360	15.11
140075	01.4423	17.74
140077	01.1266	14.95
140079	01.2576	19.31
140080	01.6766	18.56
140081	01.1035	12.45
140082	01.5484	20.34
140083	01.3488	15.67
140084	01.2142	18.03
140086	01.1500	11.92
140087	01.2881	17.36
140088	01.5956	23.06
140089	01.2336	15.16
140090	01.4650	24.80
140091	01.7779	16.35

110028	01.6054	17.60	110113	01.0778	12.69	110209	00.9142	.	140005	00.9457	09.86	140093	01.1622	15.98
110029	01.3243	17.70	110114	01.1023	13.66	110210	01.0869	.	140007	01.4565	20.34	140094	01.2655	16.95
110030	01.2231	17.52	110115	01.6482	18.21	120001	01.7091	23.07	140008	01.4284	20.25	140095	01.5075	18.79
110031	01.3453	20.47	110118	01.0129	11.37	120002	01.1940	17.55	140010	01.3165	21.78	140097	00.9545	12.93
110032	01.2141	14.40	110120	01.1064	11.39	120003	01.0484	21.38	140011	01.0960	13.89	140098	01.5341	18.91
110033	01.4264	20.02	110121	01.1599	12.02	120004	01.2383	19.86	140012	01.2724	15.85	140100	01.3452	17.74
110034	01.4954	15.84	110122	01.2978	15.37	120005	01.2670	18.43	140013	01.6331	15.47	140101	01.1402	17.56
110035	01.3175	18.03	110124	01.0446	14.58	120006	01.1630	22.51	140014	01.1661	15.87	140102	01.0421	13.57
110036	01.6099	18.45	110125	01.2029	15.34	120007	01.6191	19.33	140015	01.2868	13.12	140103	01.3112	17.19
110037	01.0630	09.72	110127	00.9893	12.30	120009	00.9724	18.94	140016	00.9217	10.97	140105	01.2704	19.12
110038	01.4474	13.71	110128	01.1832	17.25	120010	01.7903	21.30	140018	01.3394	18.18	140107	01.0607	11.30
110039	01.3744	17.07	110129	01.6386	12.64	120011	01.2564	28.18	140019	00.9425	12.11	140108	01.3536	20.33
110040	01.0513	15.13	110130	01.0578	09.58	120012	00.9535	19.45	140024	01.0074	13.82	140109	01.0921	12.38
110041	01.2788	13.87	110132	01.1389	12.55	120014	01.2478	20.16	140025	01.0810	15.57	140110	01.2892	15.34
110042	01.1808	14.31	110134	00.8695	10.30	120015	00.8979	20.16	140026	01.1455	14.78	140112	01.0946	13.56

TABLE 3C : HOSPITAL CASE MIX INDEXES FOR DISCHARGES OCCURRING IN FEDERAL FISCAL YEAR 1994 PAGE 5 OF 16
: HOSPITAL AVERAGE HOURLY WAGE FOR FEDERAL FISCAL YEAR 1996 WAGE INDEX

PROVIDER	CASE MIX INDEX	AVG HOUR WAGE
140113	01.4667	17.23
140114	01.3273	17.70
140115	01.2842	16.57
140116	01.2401	17.79
140117	01.4087	16.72
140118	01.6959	21.24
140119	01.6510	20.94
140120	01.4832	14.18
140121	01.4659	10.01
140122	01.5359	20.90
140124	01.1150	21.99
140125	01.3105	14.30
140127	01.3093	16.12
140128	01.0932	15.47
140129	01.0387	13.55
140130	01.1656	19.99
140132	01.4209	18.36
140133	01.3817	19.25
140135	01.2404	13.86
140137	01.0156	13.42
140138	00.9734	11.80
140139	01.0713	13.33
140140	01.1717	12.45
140141	00.9215	12.21
140143	01.1183	15.80
140144	01.0178	13.85
140145	01.1246	15.06
140146	00.9402	14.65
140147	01.1691	13.02
140148	01.7028	16.79
140150	01.5352	22.42
140151	01.1684	16.06
140152	01.0961	21.14
140155	01.2049	16.91
140158	01.3353	20.44
140160	01.2065	14.61
140161	01.1217	16.18
140162	01.6796	17.28
140164	01.2495	15.27
140165	01.0959	12.83
140166	01.2658	15.81
140167	01.1582	13.88
140168	01.2012	14.64
140170	01.1334	11.77
140171	00.8939	10.42
140172	01.5022	17.11
140173	00.9862	12.88
140174	01.4132	17.67
140176	01.2479	19.10
140177	01.2834	15.29
140179	01.3045	18.61
140180	01.4745	20.05
140181	01.3422	17.28

PROVIDER	CASE MIX INDEX	AVG HOUR WAGE
140203	01.1743	17.40
140205	00.9280	13.44
140206	00.9843	18.13
140207	01.3699	19.80
140208	01.5900	22.03
140209	01.7169	16.20
140210	01.0256	11.46
140211	01.1932	18.69
140212	01.1525	21.62
140213	01.2715	21.23
140215	01.1466	13.29
140217	01.1995	20.19
140218	00.9763	13.27
140220	01.1228	14.02
140223	01.5259	21.42
140224	01.3781	20.01
140228	01.5722	16.72
140230	00.9807	14.89
140231	01.5465	19.72
140233	01.7510	15.55
140234	01.1935	15.04
140236	00.9899	11.86
140239	01.5662	17.90
140240	01.4682	21.75
140242	01.5202	20.44
140245	01.1149	12.96
140246	01.0624	11.58
140250	01.2695	21.19
140251	01.3118	17.14
140252	01.4472	21.67
140253	01.4684	.
140258	01.5147	20.74
140271	01.0473	13.77
140275	01.2135	15.26
140276	01.9940	19.03
140280	01.2782	16.62
140281	01.5915	19.85
140285	01.2306	14.65
140286	01.0931	16.58
140288	01.6724	21.28
140289	01.2914	14.43
140290	01.3176	19.56
140291	01.3434	22.01
140292	01.1802	18.63
140294	01.1520	15.03
140297	01.1927	21.49
140300	01.0326	.
150001	01.1020	16.90
150002	01.4343	16.23
150003	01.7334	16.59
150004	01.4479	18.37
150005	01.2148	16.87
150006	01.1902	15.77

PROVIDER	CASE MIX INDEX	AVG HOUR WAGE
150023	01.4740	16.92
150024	01.3026	15.60
150025	01.4959	17.14
150026	01.1687	16.48
150027	01.0143	15.66
150029	01.2771	17.73
150030	01.0682	15.26
150031	01.0305	13.82
150032	01.8081	18.37
150033	01.5708	18.86
150034	01.3589	18.13
150035	01.4082	17.89
150036	01.0143	16.72
150037	01.2518	16.88
150038	01.3416	15.77
150039	00.9563	14.21
150042	01.2383	14.19
150043	01.0397	18.18
150044	01.2397	17.15
150045	01.1661	15.56
150046	01.4959	16.06
150047	01.6536	17.32
150048	01.1747	15.68
150049	01.1567	12.40
150050	01.1472	14.30
150051	01.2720	15.96
150052	01.1248	11.23
150053	01.0222	15.93
150054	01.1288	13.30
150056	01.6426	19.66
150057	02.4445	14.55
150058	01.6757	17.54
150059	01.3263	18.15
150060	01.1558	15.01
150061	01.2431	14.90
150062	01.0231	14.82
150063	01.0873	19.83
150064	01.0351	16.55
150065	01.0998	16.08
150066	00.9886	13.07
150067	01.0665	13.96
150069	01.2214	16.18
150070	01.0522	14.00
150071	01.2035	11.40
150072	01.1566	15.35
150073	00.9930	17.12
150074	01.5562	18.05
150075	01.1752	13.29
150076	01.0483	16.51
150077	01.3155	15.22
150078	01.0198	18.19
150079	01.2096	13.37
150082	01.4885	16.98

PROVIDER	CASE MIX INDEX	AVG HOUR WAGE
150102	01.0647	13.94
150103	01.0209	15.64
150104	01.1069	14.82
150105	01.3114	15.63
150106	01.0797	15.53
150109	01.4150	14.54
150110	00.9933	14.35
150111	01.2172	13.31
150112	01.2096	16.35
150113	01.1661	16.07
150114	01.0006	12.64
150115	01.3315	16.31
150122	01.1316	16.92
150123	01.2512	13.21
150124	01.1524	14.29
150125	01.3979	17.70
150126	01.5032	18.93
150127	01.1495	12.34
150128	01.2308	17.33
150129	01.1757	19.71
150130	01.0605	13.99
150132	01.3512	19.63
150133	01.1948	15.64
150134	01.2848	15.24
150136	00.9146	18.37
150137	03.0011	.
150138	01.1952	.
150140	02.4500	.
150141	00.9198	.
150897	05.1104	.
160001	01.2432	16.04
160002	01.2061	13.01
160003	01.0316	12.40
160005	01.0556	12.42
160007	01.0192	12.24
160008	01.1329	14.12
160009	01.2115	13.13
160012	01.1292	13.88
160013	01.2597	14.28
160014	00.9704	12.72
160016	01.2532	15.22
160018	00.9102	12.69
160020	01.0573	11.57
160021	01.0850	14.23
160023	01.0963	13.47
160024	01.5912	16.25
160025	01.7787	15.89
160026	01.1474	14.15
160027	01.1991	12.61
160028	01.3042	17.45
160029	01.4726	16.54
160030	01.2656	15.65
160031	01.1953	12.60

PROVIDER	CASE MIX INDEX	AVG HOUR WAGE
160049	00.9304	11.56
160050	01.0337	13.62
160051	01.1200	14.21
160052	01.0426	12.86
160054	00.9726	11.05
160055	01.0280	12.02
160056	01.0372	12.73
160057	01.3292	14.53
160058	01.6601	17.91
160060	01.0508	13.01
160061	01.0053	12.04
160062	01.0359	11.11
160063	01.1764	12.72
160064	01.5805	16.66
160065	01.0796	13.11
160066	01.1325	13.51
160067	01.4124	15.81
160068	00.9909	13.55
160069	01.3955	15.47
160070	00.9622	12.72
160072	01.0833	12.24
160073	00.9507	10.93
160074	00.9967	12.64
160075	01.0715	13.49
160076	01.0568	15.24
160077	01.2019	10.22
160079	01.4068	15.08
160080	01.2129	15.51
160081	01.0837	13.91
160082	01.6907	16.80
160083	01.5047	16.82
160085	01.0726	11.90
160086	00.9276	12.15
160088	01.0502	13.89
160089	01.2047	13.54
160090	01.0540	14.24
160091	01.1714	10.55
160092	00.9678	12.64
160093	01.1418	12.92
160094	01.2114	14.65
160095	01.0147	15.81
160097	01.1838	13.10
160098	01.0149	12.41
160099	00.9934	11.35
160101	01.1244	17.13
160102	01.3053	15.06
160103	00.9903	12.23
160104	01.1575	16.70
160106	01.0834	13.40
160107	01.1462	14.31
160108	01.0930	13.59
160109	00.9279	11.85
160110	01.5471	17.18

140182	01.3041	19.45	150007	01.2598	17.48	150084	01.8632	21.52	160032	01.1969	14.22	160111	01.0002	10.22
140184	01.1651	13.87	150008	01.3427	18.07	150086	01.2754	15.03	160033	01.4972	15.45	160112	01.4480	14.36
140185	01.4733	15.34	150009	01.2791	16.85	150088	01.1862	16.25	160034	00.9901	13.04	160113	01.0104	11.13
140186	01.2821	17.46	150010	01.1821	16.38	150089	01.3657	16.71	160035	00.9947	11.50	160114	01.0521	13.89
140187	01.4159	15.70	150011	01.2161	15.65	150090	01.2323	17.84	160036	01.0402	13.58	160115	00.9910	12.83
140188	00.9720	10.93	150012	01.6456	18.77	150091	01.0696	15.33	160037	01.1606	14.19	160116	01.1869	14.18
140189	01.1505	15.87	150013	01.1120	12.68	150092	01.0248	12.84	160039	01.0398	14.71	160117	01.2911	14.70
140190	01.1516	13.53	150014	01.4300	18.85	150094	01.0278	16.14	160040	01.3292	15.44	160118	01.0060	11.77
140191	01.4177	20.56	150015	01.2698	15.88	150095	01.0867	15.17	160041	01.0179	12.16	160120	00.9929	09.44
140192	01.1314	16.11	150017	01.7899	15.68	150096	01.0555	17.76	160043	01.0207	13.42	160122	01.1665	14.31
140193	01.0107	11.79	150018	01.2597	16.65	150097	01.0902	16.38	160044	01.1729	12.51	160123	01.1893	14.15
140197	01.3693	16.76	150019	01.0326	13.59	150098	01.1606	11.86	160045	01.6649	16.35	160124	01.2361	14.80
140199	01.0297	14.73	150020	01.1634	12.34	150099	01.2818	14.94	160046	01.0630	11.52	160126	01.0849	16.15
140200	01.4496	20.10	150021	01.6427	17.52	150100	01.6390	17.23	160047	01.3428	15.29	160129	01.0143	12.82
140202	01.3424	19.33	150022	01.0976	17.53	150101	01.1126	15.07	160048	01.1219	11.75	160130	01.0653	12.49

TABLE 3C : HOSPITAL CASE MIX INDEXES FOR DISCHARGES OCCURRING IN FEDERAL FISCAL YEAR 1994 PAGE 6 OF 16
: HOSPITAL AVERAGE HOURLY WAGE FOR FEDERAL FISCAL YEAR 1996 WAGE INDEX

PROVIDER	CASE MIX INDEX	AVG HOUR WAGE	PROVIDER	CASE MIX INDEX	AVG HOUR WAGE	PROVIDER	CASE MIX INDEX	AVG HOUR WAGE	PROVIDER	CASE MIX INDEX	AVG HOUR WAGE	PROVIDER	CASE MIX INDEX	AVG HOUR WAGE
160131	01.1368	12.28	170068	01.3104	14.11	170164	00.9902	13.92	180067	01.9168	15.20	190034	01.1618	14.41
160133	01.1892	17.39	170069	01.1662	13.12	170166	01.1593	13.71	180069	01.0341	15.39	190035	01.4516	17.61
160134	01.0327	12.24	170070	01.0065	12.24	170168	00.8805	10.83	180070	01.0796	13.59	190036	01.6209	18.08
160135	00.9905	10.69	170072	00.9222	10.54	170171	01.0870	10.44	180072	00.9967	14.39	190037	01.0271	10.37
160138	01.1206	12.70	170073	01.0153	12.99	170172	00.9598	12.70	180075	00.9690	12.29	190039	01.4420	17.58
160140	01.0817	14.30	170074	01.1119	12.85	170174	01.0209	10.87	180078	01.0972	16.97	190040	01.3886	17.91
160142	01.0436	12.65	170075	00.8636	10.41	170175	01.2718	17.46	180079	01.2231	13.16	190041	01.4862	16.84
160143	01.0395	12.58	170076	01.0474	10.87	170176	01.5102	19.27	180080	01.0554	13.90	190043	01.0930	12.42
160145	01.1166	11.55	170077	00.9750	10.85	170180	01.2056	.	180085	01.2870	16.89	190044	01.1589	17.86
160146	01.3788	14.96	170079	01.0922	10.45	170181	01.1767	.	180087	01.0992	13.07	190045	01.3427	18.67
160147	01.2181	14.07	170080	00.9843	11.16	180001	01.2236	15.86	180088	01.6299	18.09	190046	01.4660	16.26
160151	01.0874	13.10	170081	00.9983	10.32	180002	01.0444	16.25	180092	01.0879	13.78	190047	01.0592	16.68
160152	00.9465	12.35	170082	00.9985	10.30	180004	01.1141	13.38	180093	01.3383	14.08	190048	01.0628	13.69
160153	01.7281	16.71	170084	00.9622	10.65	180005	01.0608	17.26	180094	00.9415	11.42	190049	01.0162	13.95
170001	01.2135	14.88	170085	00.9010	11.95	180006	00.9264	08.63	180095	01.1926	12.50	190050	01.0699	13.14
170004	01.0693	12.69	170086	01.6644	17.05	180007	01.3840	14.33	180099	01.2031	10.89	190053	01.0359	12.25
170006	01.1997	15.19	170087	01.4303	18.81	180009	01.3236	16.50	180101	01.3182	18.68	190054	01.3670	13.23
170008	00.9800	12.92	170088	00.8973	09.76	180010	01.8388	16.23	180102	01.4342	14.60	190059	00.9426	13.39
170009	01.1151	17.18	170089	01.0612	12.95	180011	01.1432	15.42	180103	02.0461	17.52	190060	01.4756	15.16
170010	01.1750	14.08	170090	01.0113	09.95	180012	01.3054	16.85	180104	01.4726	15.55	190064	01.4909	16.92
170011	01.3534	14.19	170092	00.8137	11.15	180013	01.4639	15.12	180105	00.9021	12.43	190065	01.4974	17.12
170012	01.4654	15.64	170093	00.8838	11.10	180014	01.5939	17.73	180106	00.9042	11.83	190071	00.8525	11.85
170013	01.3534	13.97	170094	01.0617	13.44	180015	01.1844	14.35	180108	00.8779	12.16	190075	01.4544	18.92
170014	01.0835	14.53	170095	01.1104	13.17	180016	01.2621	14.75	180115	00.9709	14.02	190077	00.9541	11.73
170015	00.9817	13.60	170097	00.9797	10.48	180017	01.2900	13.27	180116	01.3143	15.01	190078	01.1815	11.43
170016	01.6103	19.51	170098	01.0224	15.18	180018	01.1714	13.80	180117	01.2395	15.41	190079	01.2314	14.73
170017	01.1912	15.10	170099	01.3144	10.77	180019	01.3285	16.80	180118	01.0405	11.92	190081	00.9053	08.99
170018	01.0152	11.92	170100	01.0268	13.48	180020	01.0563	15.49	180120	00.9837	12.26	190083	00.9662	11.08
170019	01.1395	14.63	170101	00.9913	13.45	180021	01.1656	12.98	180121	01.0733	12.71	190086	01.3031	14.53
170020	01.3113	14.68	170102	00.9680	12.36	180023	00.8859	10.99	180122	01.0623	12.63	190088	01.2363	16.36
170022	01.1429	13.47	170103	01.2825	14.83	180024	01.2583	15.48	180123	01.4455	17.30	190089	01.0754	09.26
170023	01.3812	15.56	170104	01.4284	19.34	180025	01.1200	15.19	180124	01.4052	15.91	190090	01.1683	14.43
170024	01.2165	11.95	170105	00.9748	13.46	180026	01.1607	11.76	180125	00.9592	15.97	190092	01.2522	11.66
170025	01.3790	14.29	170106	00.8767	12.19	180027	01.2165	14.17	180126	01.2185	11.31	190095	01.0282	13.52
170026	01.0495	13.40	170108	00.9812	10.51	180028	00.9829	16.46	180127	01.2607	16.63	190098	01.5111	17.10
170027	01.2558	14.72	170109	01.0093	13.96	180029	01.2210	15.43	180128	01.1471	13.00	190099	01.1233	17.03
170030	01.0217	13.67	170110	00.9228	15.29	180030	01.1284	09.54	180129	01.0476	15.03	190102	01.5280	15.33
170031	00.9339	11.65	170112	00.9272	12.74	180031	00.9309	12.11	180130	01.4153	17.27	190103	00.8387	09.39
170032	01.1089	13.49	170113	01.1928	13.04	180032	01.0565	15.53	180132	01.1830	14.40	190106	01.1260	15.42
170033	01.2883	14.89	170114	01.0129	12.48	180033	01.1072	12.13	180133	01.2376	17.31	190109	01.2183	14.11
170034	00.9141	13.26	170115	01.0172	10.73	180034	00.9900	14.64	180134	00.9798	12.39	190110	01.0315	11.76
170035	00.8753	12.11	170116	01.0408	13.57	180035	01.5000	16.92	180136	01.4164	16.84	190111	01.5612	17.17
170036	00.8821	11.44	170117	00.9096	12.83	180036	01.1470	16.65	180137	01.6569	17.08	190112	01.4925	17.30
170037	01.1199	15.23	170119	00.9649	10.20	180037	01.2430	19.20	180138	01.1822	16.52	190113	01.3380	17.08
170038	00.9551	11.29	170120	01.3264	14.75	180038	01.3504	14.14	180139	01.1040	15.33	190114	00.9853	12.28
170039	01.0976	12.22	170121	00.9383	11.71	180040	01.9318	19.09	190001	00.9679	16.01	190115	01.2551	17.60
170040	01.4314	16.25	170122	01.8110	18.62	180041	01.0470	13.28	190002	01.6370	18.16	190116	01.2880	13.30
170041	01.0144	11.04	170123	01.7843	18.28	180042	01.1657	12.00	190003	01.4041	18.23	190118	01.0065	12.00
170043	01.0640	12.94	170124	00.9830	12.46	180043	01.0901	15.39	190004	01.3567	14.02	190120	01.0309	13.37
170044	01.1084	14.61	170126	00.9862	10.58	180044	01.0568	13.83	190005	01.4937	15.78	190122	01.2868	13.38
170045	01.0144	12.44	170128	00.9854	13.53	180045	01.2228	16.28	190006	01.2067	13.74	190124	01.4621	18.66
170049	01.3184	17.80	170131	01.1350	09.38	180046	01.0901	16.36	190007	01.0437	12.27	190125	01.4606	15.18
170050	01.0199	10.54	170133	01.1710	14.32	180047	01.0671	13.71	190008	01.6459	16.82	190127	01.4573	19.90

170051	00.9951	12.83	170134	00.9502	11.70	180048	01.1875	15.40	190009	01.1406	13.81	190128	01.0689	16.60
170052	01.1055	12.81	170137	01.1494	16.18	180049	01.3297	14.26	190010	01.1217	13.57	190130	01.0493	12.05
170053	00.8956	11.99	170139	01.0554	11.91	180050	01.3011	15.06	190011	01.1868	13.25	190131	01.2973	14.32
170054	01.0674	12.27	170140	01.0762	11.61	180051	01.3449	13.60	190013	01.3696	15.51	190133	01.0532	10.80
170055	01.1183	14.16	170142	01.2491	15.74	180053	01.2175	13.52	190014	01.0604	13.49	190134	00.9942	11.85
170056	00.9914	10.07	170143	01.1525	13.23	180054	01.0534	12.43	190015	01.2036	16.53	190135	01.4560	18.43
170057	01.0098	14.13	170144	01.6075	14.82	180055	01.1071	13.29	190017	01.2606	14.98	190136	01.1399	12.08
170058	01.1356	16.33	170145	01.1819	13.74	180056	01.0787	15.70	190018	01.2246	15.07	190138	00.7376	18.82
170060	01.0085	12.67	170146	01.3569	17.87	180058	00.9168	12.01	190019	01.4615	15.79	190140	00.9858	11.41
170061	01.2342	11.89	170147	01.1920	17.94	180059	00.8798	11.19	190020	01.1443	16.43	190142	00.9660	13.12
170062	00.9531	11.22	170148	01.4363	17.40	180060	00.9584	11.01	190025	01.2327	12.09	190144	01.1974	14.30
170063	00.9660	09.03	170150	01.1431	14.56	180063	01.0491	09.44	190026	01.4190	14.85	190145	00.9496	13.28
170064	00.9363	11.28	170151	01.0535	11.47	180064	01.2286	12.70	190027	01.4140	15.44	190146	01.5708	17.87
170066	00.9185	11.39	170152	00.9489	13.46	180065	01.0579	09.61	190029	01.1868	15.61	190147	00.9622	12.68
170067	00.9121	11.65	170160	01.0407	11.05	180066	01.2311	17.26	190033	00.8824	09.88	190148	00.9487	11.65

TABLE 3C : HOSPITAL CASE MIX INDEXES FOR DISCHARGES OCCURRING IN FEDERAL FISCAL YEAR 1994 PAGE 7 OF 16
: HOSPITAL AVERAGE HOURLY WAGE FOR FEDERAL FISCAL YEAR 1996 WAGE INDEX

PROVIDER	CASE MIX INDEX	AVG HOUR WAGE
190149	00.9932	10.54
190151	01.0840	11.14
190152	01.4067	19.90
190155	00.9862	14.75
190156	00.8835	11.37
190158	01.3060	20.92
190160	01.2528	14.82
190161	01.0023	13.12
190162	01.2338	21.67
190164	01.0913	16.49
190166	01.0211	13.69
190167	01.2487	17.25
190170	00.9832	12.41
190173	01.4647	20.83
190175	01.3591	.
190176	01.6155	17.06
190177	01.6221	20.78
190178	00.9602	10.79
190182	00.9604	20.15
190183	01.1547	12.24
190184	01.0185	11.69
190185	01.2169	19.21
190186	00.9488	12.16
190187	00.9346	12.65
190189	00.7843	16.06
190190	01.0120	18.85
190191	01.2726	20.41
190193	01.2731	19.19
190194	01.1554	18.53
190196	00.8489	16.90
190197	01.2849	17.69
190199	01.4288	12.37
190200	01.5572	18.93
190201	01.2584	17.92
190202	01.5141	18.78
190203	01.4986	19.57
190204	01.4770	20.13
190205	01.8146	16.91
190206	01.4594	20.80
190207	01.2020	18.41
190208	00.8313	09.96
190211	00.6056	11.52
190212	00.7321	12.23
190216	00.6297	18.42
190217	00.9191	.
190218	01.0526	.
190223	00.5037	.
190226	00.8135	.
190227	00.8873	.
190229	02.6066	.
190230	00.8457	.
190231	01.1981	.
200001	01.2549	14.52
200023	00.8833	15.25
200024	01.2539	18.55
200025	01.1756	18.50
200026	01.0466	15.56
200027	01.2259	15.52
200028	00.9603	15.57
200031	01.2261	14.32
200032	01.2048	17.73
200033	01.6943	19.02
200034	01.2245	16.82
200037	01.1708	15.27
200038	01.0844	17.59
200039	01.2596	16.94
200040	01.0757	15.62
200041	01.1613	16.98
200043	00.5980	16.71
200050	01.1455	15.77
200051	00.9898	17.33
200052	01.0223	13.59
200055	01.0908	15.03
200062	00.9701	14.32
200063	01.1760	16.86
200066	01.2362	14.87
210001	01.3627	17.18
210002	02.0197	16.27
210003	01.5319	26.44
210004	01.3019	24.62
210005	01.1894	18.75
210006	01.1110	16.17
210007	01.5303	19.41
210008	01.3796	19.80
210009	01.6921	18.18
210010	01.2359	15.74
210011	01.2952	19.58
210012	01.5583	20.57
210013	01.2819	20.26
210015	01.1834	18.47
210016	01.7785	19.90
210017	01.1132	15.93
210018	01.2645	20.00
210019	01.4592	16.54
210022	01.3902	19.43
210023	01.3391	19.46
210024	01.3848	17.35
210025	01.3091	17.00
210026	01.3475	22.97
210027	01.2178	15.59
210028	01.2149	16.10
210029	01.2895	17.21
210030	01.0682	18.36
210031	01.6676	17.91
210032	01.1982	18.14
210033	01.1532	17.70
210056	01.3850	15.73
210057	01.2628	22.58
210058	01.7819	17.53
210059	01.3059	21.97
210060	01.1005	21.07
210061	01.0599	.
220001	01.1976	20.13
220002	01.5480	21.50
220003	01.0700	16.57
220004	01.1923	19.23
220006	01.3587	20.97
220008	01.2052	18.57
220010	01.2333	20.19
220011	01.1196	28.03
220012	01.3026	26.53
220015	01.1894	19.78
220016	01.2452	19.14
220017	01.3086	23.11
220019	01.1537	18.25
220020	01.1219	17.75
220021	01.3753	22.08
220023	01.1864	18.44
220024	01.1835	18.45
220025	01.1366	17.91
220028	01.4320	19.96
220029	01.1278	21.86
220030	01.0848	15.28
220031	01.6945	24.88
220033	01.3614	19.43
220035	01.2439	20.33
220036	01.6490	21.93
220038	01.3117	20.40
220041	01.1994	20.15
220042	01.2530	22.65
220046	01.4141	21.28
220049	01.2612	21.92
220050	01.0689	16.72
220051	01.2314	20.11
220052	01.2716	23.12
220053	01.2889	19.36
220055	01.3618	19.25
220057	01.3622	22.34
220058	01.0585	18.83
220060	01.1496	23.11
220062	00.6789	18.68
220063	01.2196	18.81
220064	01.1853	20.35
220065	01.1961	19.93
220066	01.3059	18.74
220067	01.2649	22.39
220068	00.5779	15.96
220070	01.2733	17.86
220071	01.8280	24.13
220092	01.2498	20.41
220094	01.2119	18.76
220095	01.2274	17.94
220097	01.1024	.
220098	01.2359	17.34
220099	01.1412	.
220100	01.2220	21.66
220101	01.4470	23.37
220104	01.2219	22.59
220105	01.1880	21.38
220106	01.2388	21.02
220107	01.2011	18.62
220108	01.1329	20.00
220110	02.0093	29.37
220111	01.2222	19.33
220114	01.4632	18.43
220116	01.8459	23.87
220118	02.0261	25.34
220119	01.3037	23.40
220120	01.2408	18.85
220123	01.0225	22.88
220126	01.2632	17.78
220128	01.1191	22.23
220133	00.8682	24.97
220135	01.1597	22.89
220153	00.9819	17.41
220154	00.9547	19.60
220156	01.3156	19.38
220162	01.4675	.
220163	01.9513	22.98
220171	01.7218	22.19
220897	04.7846	.
230001	01.2127	13.60
230002	01.2675	18.81
230003	01.1448	17.63
230004	01.6489	20.75
230005	01.2920	17.44
230006	01.1050	15.62
230007	01.0015	16.93
230012	00.6001	12.54
230013	01.3308	19.57
230015	01.1628	18.65
230017	01.5681	20.01
230019	01.4941	20.56
230020	01.6300	19.60
230021	01.5839	16.12
230022	01.3140	16.98
230024	01.4941	23.06
230027	01.1020	14.80
230029	01.5954	20.50
230030	01.2685	16.01
230031	01.4635	18.10
230032	01.7427	18.41
230059	01.4628	18.12
230060	01.3342	16.27
230062	01.1141	14.71
230063	01.3407	17.81
230065	01.4541	17.64
230066	01.3164	18.55
230068	01.4251	19.97
230069	01.1231	18.20
230070	01.4616	18.67
230071	00.8344	20.02
230072	01.2415	17.55
230075	01.5035	18.55
230076	01.3254	18.86
230077	02.0005	18.35
230078	01.1992	14.77
230080	01.1863	18.22
230081	01.1638	16.37
230082	01.1211	14.65
230085	01.1010	16.38
230086	01.0395	14.27
230087	01.0333	16.89
230089	01.3674	21.88
230092	01.2763	17.42
230093	01.2494	18.00
230095	01.1825	15.62
230096	01.1641	18.30
230097	01.5668	17.19
230099	01.2430	18.35
230100	01.2376	14.49
230101	01.0973	15.97
230103	01.0453	16.10
230104	01.6206	19.92
230105	01.5887	18.07
230106	01.1535	16.99
230107	00.8813	12.27
230108	01.2173	15.90
230110	01.2393	16.49
230111	01.0615	14.14
230113	00.9901	17.34
230114	00.6315	20.38
230115	00.9772	14.41
230116	00.9215	14.42
230117	01.8756	22.68
230118	01.2112	15.76
230119	01.3491	20.97
230120	01.1556	.
230121	01.2991	18.60
230122	01.3038	17.81
230124	01.1097	16.69
230125	01.3025	13.25
230128	01.4349	19.92
230129	01.9385	19.58
230130	01.6297	21.89

200002	01.0572	16.63	210034	01.3437	19.13	220073	01.3886	23.80	230034	01.1839	15.14	230132	01.4175	21.06
200003	01.1171	15.66	210035	01.2134	20.18	220074	01.2799	20.97	230035	01.1879	16.81	230133	01.2489	14.88
200006	01.1716	15.38	210037	01.2485	15.17	220075	01.1918	18.14	230036	01.2897	18.69	230134	01.1381	16.43
200007	00.9836	14.93	210038	01.4572	19.79	220076	01.1685	21.63	230037	01.1608	16.35	230135	01.2081	19.52
200008	01.2435	18.02	210039	01.1555	15.16	220077	01.6271	21.36	230038	01.6733	20.24	230137	01.1847	17.53
200009	01.7312	19.47	210040	01.3545	19.85	220079	01.0998	20.24	230040	01.2225	17.05	230141	01.6011	20.25
200012	01.1034	15.58	210043	01.2516	20.43	220080	01.2785	17.64	230041	01.1717	17.55	230142	01.1832	19.07
200013	01.1204	14.58	210044	01.2374	20.56	220081	01.0461	21.45	230042	01.1797	18.66	230143	01.2198	15.80
200015	01.2479	16.46	210045	00.9828	11.99	220082	01.2575	17.24	230046	01.7688	25.27	230144	01.1496	21.06
200016	01.0175	16.05	210046	01.1353	12.11	220083	01.1950	19.46	230047	01.2924	19.18	230145	01.1248	14.78
200017	01.2475	17.38	210048	01.1878	21.96	220084	01.2194	23.28	230053	01.5005	23.90	230146	01.2918	19.28
200018	01.1755	14.04	210049	01.1191	16.76	220086	01.5370	24.89	230054	01.7846	19.33	230147	01.5191	19.33
200019	01.2488	17.59	210051	01.3592	13.41	220088	01.5462	21.94	230055	01.1567	16.59	230149	01.2015	14.21
200020	01.1514	19.52	210054	01.2326	19.16	220089	01.2962	23.19	230056	00.9692	13.06	230151	01.3255	19.88
200021	01.1486	17.17	210055	01.1177	26.02	220090	01.1998	20.51	230058	01.1270	15.97	230153	01.0329	14.92

TABLE 3C : HOSPITAL CASE MIX INDEXES FOR DISCHARGES OCCURRING IN FEDERAL FISCAL YEAR 1994 PAGE 8 OF 16
: HOSPITAL AVERAGE HOURLY WAGE FOR FEDERAL FISCAL YEAR 1996 WAGE INDEX

PROVIDER	CASE MIX INDEX	AVG HOUR WAGE	PROVIDER	CASE MIX INDEX	AVG HOUR WAGE	PROVIDER	CASE MIX INDEX	AVG HOUR WAGE	PROVIDER	CASE MIX INDEX	AVG HOUR WAGE	PROVIDER	CASE MIX INDEX	AVG HOUR WAGE
230154	00.9509	12.93	240005	00.8724	13.13	240094	00.9740	16.21	240205	00.9064	.	250084	01.1344	12.46
230155	01.0658	13.24	240006	01.0940	18.30	240096	00.0892	15.05	240206	00.8706	.	250085	01.0389	11.38
230156	01.6365	21.08	240007	01.1023	14.77	240097	01.0203	16.73	240207	01.2099	20.96	250088	00.9623	14.19
230157	01.2634	18.67	240008	01.1026	13.42	240098	00.9526	14.88	240210	01.2554	21.49	250089	01.1164	11.19
230159	01.3349	18.09	240009	01.0073	14.45	240099	01.0583	11.12	240211	00.9051	11.55	250093	01.1526	12.10
230161	01.0094	12.75	240010	01.9542	20.03	240100	01.2670	18.09	250001	01.6006	15.00	250094	01.2916	13.80
230162	00.9075	14.55	240011	01.1144	15.51	240101	01.2050	16.22	250002	00.7900	12.37	250095	00.9756	12.64
230165	01.8092	20.30	240013	01.2856	15.46	240102	00.9525	13.30	250003	01.0085	12.86	250096	01.2820	14.87
230167	01.2544	18.08	240014	01.0656	16.73	240103	01.1395	14.12	250004	01.4390	14.26	250097	01.1097	13.52
230169	01.3280	20.76	240016	01.3940	14.72	240104	01.1831	19.56	250005	00.9911	09.59	250098	00.8753	11.22
230171	01.0272	14.03	240017	01.1532	14.77	240105	01.1009	13.71	250006	00.9882	13.07	250099	01.2390	11.86
230172	01.2700	22.25	240018	01.2876	15.31	240106	01.2745	22.45	250007	01.2432	16.54	250100	01.2098	12.66
230174	01.2373	17.96	240019	01.2214	19.80	240107	00.9818	13.40	250008	00.9645	10.63	250101	00.9436	09.57
230175	02.5986	14.23	240020	01.1712	17.23	240108	00.9750	11.10	250009	01.1545	12.76	250102	01.4636	13.97
230176	01.2032	19.73	240021	00.9716	12.83	240109	00.9503	13.75	250010	01.0244	11.13	250104	01.2784	14.47
230178	01.0145	14.97	240022	01.1400	16.66	240110	00.9468	14.99	250012	00.9567	14.17	250105	00.8549	11.42
230180	01.0990	14.82	240023	01.0889	15.38	240111	00.9742	12.94	250015	01.1004	12.36	250107	00.9009	13.99
230184	01.1684	15.91	240025	01.2318	13.94	240112	01.0876	13.13	250017	00.9541	12.98	250109	00.9702	12.07
230186	01.3156	15.69	240027	01.0089	12.39	240114	01.0126	10.23	250018	00.9422	10.22	250112	00.9540	12.65
230188	01.1269	15.61	240028	01.1333	15.53	240115	01.6263	20.91	250019	01.3260	16.89	250117	01.0299	12.65
230189	00.9155	14.34	240029	01.2151	15.39	240116	00.8793	12.64	250020	00.9815	09.79	250119	01.2517	11.54
230190	00.9985	20.60	240030	01.3114	16.01	240117	01.0866	16.56	250021	00.8919	07.83	250120	01.0477	11.96
230191	00.9050	14.34	240031	00.9538	12.78	240119	00.8508	16.27	250023	00.8960	09.70	250122	01.3103	14.29
230193	01.2139	16.81	240036	01.4880	18.61	240121	00.8918	17.30	250024	00.9702	08.93	250123	01.4157	18.33
230194	01.1634	13.35	240037	01.0820	15.12	240122	01.0335	16.04	250025	01.1592	13.66	250124	00.8949	11.34
230195	01.2651	20.49	240038	01.4671	21.40	240123	01.0175	12.31	250027	01.0472	10.04	250125	01.3291	15.75
230197	01.2735	19.07	240040	01.2423	18.94	240124	01.0496	15.19	250029	00.8991	11.10	250126	01.0028	12.25
230199	01.1781	16.77	240041	01.1977	14.12	240125	00.9073	10.62	250030	00.9679	11.80	250127	00.7914	.
230201	01.0418	13.64	240043	01.2015	16.03	240127	00.9922	11.24	250031	01.3822	17.69	250128	00.9406	10.61
230204	01.3364	19.61	240044	01.1752	15.76	240128	01.0927	13.49	250032	01.2613	15.96	250131	01.0299	09.45
230205	01.0870	15.36	240045	01.0528	16.81	240129	00.9624	11.01	250033	00.9348	12.59	250134	00.9563	11.58
230207	01.2045	19.06	240047	01.4204	17.39	240130	00.9809	14.34	250034	01.4942	12.38	250136	00.8571	16.62
230208	01.1857	14.67	240048	01.2643	20.88	240132	01.2204	21.55	250035	00.8677	12.03	250138	01.3336	16.03
230211	00.9924	13.41	240049	01.6738	20.76	240133	01.1246	15.52	250036	00.9916	10.24	250140	00.8096	09.41
230212	01.0483	19.14	240050	01.1317	17.74	240135	00.9295	11.04	250037	00.8812	08.83	250141	01.2433	14.89
230213	01.0397	11.90	240051	00.9220	16.00	240137	01.1885	14.43	250038	00.9768	09.93	250144	00.9434	.
230216	01.4050	14.96	240052	01.2338	16.24	240138	00.9614	11.55	250039	01.0072	10.13	250145	00.8776	.
230217	01.1276	17.17	240053	01.5053	19.08	240139	00.9522	14.97	250040	01.3215	14.88	250146	01.0137	.
230219	00.9678	12.74	240056	01.2938	19.39	240141	01.0970	19.61	250042	01.1540	13.22	250148	01.0679	.
230221	01.2586	18.57	240057	01.7441	21.23	240142	01.1064	14.42	250043	00.8807	10.27	250149	00.9185	.
230222	01.3322	17.89	240058	00.9589	09.56	240143	00.9171	11.41	250044	01.0080	12.85	260001	01.6403	15.91
230223	01.3124	19.20	240059	01.0833	17.97	240144	00.9704	13.73	250045	01.2079	15.80	260002	01.4302	19.48
230227	01.4491	20.47	240061	01.7110	19.93	240145	01.0050	11.38	250047	00.9139	08.87	260003	00.9754	12.78
230228	01.2858	17.02	240063	01.5324	20.52	240146	00.9819	14.99	250048	01.4048	12.62	260004	01.0432	12.06
230230	01.3792	20.01	240064	01.1612	17.31	240148	01.0002	10.45	250049	00.8975	10.42	260005	01.5807	19.05
230232	01.0545	16.94	240065	00.9355	10.64	240150	00.8788	10.86	250050	01.2595	11.28	260006	01.4817	16.01
230235	00.9996	14.62	240066	01.3814	19.06	240152	01.0006	17.14	250051	00.8761	08.96	260007	01.4066	16.14
230236	01.3172	20.31	240069	01.1326	17.24	240153	01.0176	14.24	250057	01.1502	12.74	260008	01.2397	13.90
230239	01.1431	14.99	240071	01.1274	17.46	240154	00.9879	14.61	250058	01.1661	12.27	260009	01.2653	15.01
230241	01.1606	16.43	240072	00.9996	15.57	240155	00.9248	16.12	250059	01.1860	11.77	260011	01.6009	16.63
230244	01.3811	18.83	240073	00.9767	14.01	240157	01.0125	12.12	250060	00.8048	11.28	260012	01.0578	11.88
230253	01.0484	16.84	240075	01.2056	18.33	240160	00.9521	14.46	250061	00.8768	09.15	260013	01.1391	13.50
230254	01.2285	21.93	240076	01.1442	19.11	240161	00.9606	14.31	250063	00.8498	12.49	260014	01.7511	17.79

230257	01.1387	17.12	240077	00.9193	12.69	240162	00.9633	14.88	250065	00.9039	10.82	260015	01.2439	12.97
230259	01.2715	18.67	240078	01.4361	19.92	240163	00.8665	13.46	250066	00.9325	12.03	260017	01.1927	12.42
230264	01.2471	16.92	240079	01.0107	13.47	240166	01.1245	14.50	250067	01.0947	12.22	260018	00.9427	08.66
230269	01.2438	20.82	240080	01.4106	19.39	240169	00.9513	13.93	250068	00.8705	12.14	260019	01.0703	13.01
230270	01.2165	19.64	240082	01.1398	14.18	240170	01.1212	14.12	250069	01.2526	12.65	260020	01.6809	19.79
230273	01.5822	19.35	240083	01.3321	17.68	240171	01.0071	13.83	250071	00.9922	11.25	260021	01.4704	16.68
230275	00.6453	15.75	240084	01.3195	16.20	240172	01.0865	14.56	250072	01.2883	15.11	260022	01.3476	14.85
230276	00.8823	15.48	240085	00.9115	15.23	240173	01.0131	14.49	250073	01.0574	09.16	260023	01.2148	14.03
230277	01.2075	19.43	240086	01.0856	14.33	240179	01.0490	14.05	250076	01.0126	11.04	260024	00.9983	11.71
230278	01.7771	17.19	240087	01.1568	14.21	240180	00.9135	10.44	250077	00.9404	10.20	260025	01.3006	13.16
230280	00.9194	.	240088	01.4395	17.29	240184	00.9033	11.75	250078	01.3909	13.76	260027	01.5843	18.65
240001	01.5214	20.18	240089	01.0076	14.73	240187	01.2619	15.97	250079	00.8481	12.64	260029	01.1107	17.08
240002	01.6719	19.53	240090	01.0775	13.12	240193	01.0525	14.44	250081	01.2300	14.24	260030	01.3016	09.37
240003	01.1482	23.37	240091	01.0937	10.92	240196	00.6037	18.69	250082	01.2321	12.01	260031	01.4656	18.03
240004	01.4442	19.26	240093	01.3109	15.75	240200	00.8565	12.36	250083	01.0860	11.71	260032	01.6047	13.18

TABLE 3C : HOSPITAL CASE MIX INDEXES FOR DISCHARGES OCCURRING IN FEDERAL FISCAL YEAR 1994 PAGE 9 OF 16
: HOSPITAL AVERAGE HOURLY WAGE FOR FEDERAL FISCAL YEAR 1996 WAGE INDEX

PROVIDER	CASE MIX INDEX	AVG HOUR WAGE
260034	01.0156	12.93
260035	01.0664	11.41
260036	01.0898	14.27
260037	01.3239	14.40
260039	01.2462	10.72
260040	01.6132	14.88
260042	01.3265	15.75
260044	01.0826	13.78
260047	01.4225	13.91
260048	01.2568	17.03
260050	01.1086	13.74
260052	01.2714	16.70
260053	01.1662	09.81
260054	01.2523	15.10
260055	01.0736	12.81
260057	01.1637	13.77
260059	01.1221	12.90
260061	01.1058	11.10
260062	01.1913	15.30
260063	01.0980	14.23
260064	01.3736	14.63
260065	01.7358	14.50
260066	01.1243	12.47
260067	00.9050	10.16
260068	01.7208	18.00
260070	01.2610	11.28
260073	01.0088	11.49
260074	01.3223	14.56
260077	01.5567	16.08
260078	01.1107	15.17
260079	01.0373	11.13
260080	00.9468	09.28
260081	01.3832	17.21
260082	01.1721	13.16
260085	01.5216	18.65
260086	01.0099	12.28
260089	01.0430	12.88
260091	01.6169	18.97
260094	01.0880	14.92
260095	01.4323	16.21
260096	01.5455	19.82
260097	01.1495	14.83
260100	01.1265	12.68
260102	01.0386	15.71
260103	01.3160	17.08
260104	01.6589	17.96
260105	01.8279	18.29
260107	01.3897	17.90
260108	01.7500	17.38
260109	01.0095	11.51
260110	01.5457	14.55
260111	00.8940	10.83
260112	01.4438	17.09

PROVIDER	CASE MIX INDEX	AVG HOUR WAGE
260142	01.1887	14.08
260143	00.9904	10.22
260146	01.4876	19.71
260147	01.0149	12.16
260148	01.0084	12.64
260158	01.1774	11.40
260159	01.3430	18.30
260160	01.0911	12.54
260162	01.5119	16.23
260163	01.1761	13.51
260164	01.0491	11.58
260166	01.1551	18.14
260172	01.0137	11.31
260173	00.9916	10.67
260175	01.1485	13.86
260176	01.5959	15.21
260177	01.2802	18.47
260178	01.4977	19.19
260179	01.5458	20.22
260180	01.7175	17.79
260183	01.6332	15.54
260186	01.1912	14.51
260188	01.3009	16.33
260189	00.9718	09.35
260190	01.1855	18.20
260191	01.1913	16.21
260193	01.2097	17.84
260195	01.1683	13.70
260197	01.2679	22.49
260198	01.2554	14.73
260200	01.2583	20.52
260202	01.1408	17.37
260204	00.5287	.
270002	01.2072	14.67
270003	01.2456	17.35
270004	01.6723	16.44
270006	01.0357	11.79
270007	00.9035	12.34
270009	01.0522	18.56
270011	01.1431	14.69
270012	01.4586	17.47
270013	01.3239	16.62
270014	01.6567	15.12
270016	00.8211	10.20
270017	01.2751	16.23
270019	00.9930	12.23
270021	01.1349	14.48
270023	01.3040	17.63
270024	00.9842	11.35
270026	00.9128	12.56
270027	01.0305	12.04
270028	01.0706	14.45
270029	01.0320	14.46

PROVIDER	CASE MIX INDEX	AVG HOUR WAGE
270053	00.9970	07.13
270057	01.1692	15.18
270058	00.9818	10.66
270059	00.8275	13.66
270060	00.9741	13.42
270063	00.9125	13.15
270068	00.9231	11.79
270072	00.9576	12.39
270073	01.1044	10.27
270074	00.9149	.
270075	00.8505	.
270076	00.7659	.
270079	00.8806	13.15
270080	01.1206	14.02
270081	01.0081	10.21
270082	00.9080	16.06
270083	01.0333	11.82
270084	00.8579	13.29
270085	01.1363	.
280001	01.1541	14.18
280003	01.9102	17.34
280005	01.4451	16.78
280009	01.5922	15.76
280010	00.9153	13.81
280011	00.9470	11.03
280012	01.1852	13.28
280013	01.9695	20.71
280014	00.9427	10.97
280015	01.1108	12.78
280017	01.1940	13.37
280018	01.0064	12.08
280020	01.5115	17.33
280021	01.2589	14.03
280022	00.9591	10.41
280023	01.3691	14.33
280024	00.9379	10.93
280025	01.0059	10.58
280026	01.0774	12.62
280028	01.0505	12.46
280029	00.9984	12.23
280030	01.7866	22.60
280031	01.0720	12.01
280032	01.2366	14.78
280033	01.0133	12.91
280034	01.1900	13.66
280035	00.8819	11.62
280037	00.9998	12.06
280038	01.0605	12.86
280039	01.2712	13.10
280040	01.6153	18.26
280041	01.0578	10.95
280042	01.1705	13.58
280043	01.0535	12.23

PROVIDER	CASE MIX INDEX	AVG HOUR WAGE
280062	01.1912	10.12
280064	00.9706	12.15
280065	01.2512	15.96
280066	01.0293	11.07
280068	00.9847	08.59
280070	00.9863	09.86
280073	01.0758	12.53
280074	01.0409	11.79
280075	01.3055	11.50
280076	01.0752	12.42
280077	01.3623	16.20
280079	01.0096	08.85
280080	01.2529	10.50
280081	01.6910	18.52
280082	01.0939	11.81
280083	01.0486	12.63
280084	01.0201	10.55
280085	00.5745	13.22
280088	01.6943	17.05
280089	01.0284	13.15
280090	01.0387	11.51
280091	01.1392	14.23
280092	00.8866	11.69
280094	01.1314	13.77
280097	00.9867	12.08
280098	00.9200	09.92
280101	01.0595	09.77
280102	01.1276	10.31
280104	01.0141	10.32
280105	01.2538	15.99
280106	00.9297	13.01
280107	01.0584	10.79
280108	01.1080	12.56
280109	00.8849	10.22
280110	01.0165	10.55
280111	01.2542	15.55
280114	00.9309	10.07
280115	00.9753	13.60
280117	01.1627	14.07
280118	00.9862	13.25
280119	00.9957	.
280123	00.9270	15.00
290001	01.7411	21.82
290002	00.9235	17.75
290003	01.6556	21.19
290005	01.2673	19.56
290006	01.0348	16.63
290007	01.7758	22.22
290008	01.2015	17.86
290009	01.5582	20.26
290010	01.1530	17.50
290011	00.9731	13.05
290012	01.4462	19.66

PROVIDER	CASE MIX INDEX	AVG HOUR WAGE
300001	01.4055	19.86
300003	01.7901	21.09
300005	01.2719	17.44
300006	01.1105	15.99
300007	01.1791	17.72
300008	01.2223	16.18
300009	01.1965	15.47
300010	01.2115	17.36
300011	01.3331	21.08
300012	01.2950	21.68
300013	01.1820	16.16
300014	01.2558	17.01
300015	01.1412	16.94
300016	01.2669	19.06
300017	01.1742	19.64
300018	01.2146	18.68
300019	01.2258	18.15
300020	01.2428	18.81
300021	01.1687	15.20
300022	01.1081	16.54
300023	01.2771	19.11
300024	01.2875	17.09
300028	01.3078	15.13
300029	01.2847	20.32
300033	01.0577	13.69
300034	01.9216	21.01
310001	01.6894	23.30
310002	01.6535	24.76
310003	01.2000	20.90
310005	01.1805	20.02
310006	01.2102	20.07
310008	01.2636	19.90
310009	01.2227	20.09
310010	01.3110	18.36
310011	01.2836	19.99
310012	01.5305	22.97
310013	01.3252	19.19
310014	01.6145	22.95
310015	01.7717	23.86
310016	01.2319	21.83
310017	01.3433	21.36
310018	01.2139	21.47
310019	01.6862	21.25
310020	01.1983	18.60
310021	01.2801	19.65
310022	01.2488	18.19
310024	01.2322	21.47
310025	01.1869	20.24
310026	01.2706	21.12
310027	01.3096	17.61
310028	01.1396	19.28
310029	01.7904	20.86
310031	02.6061	23.85

260113	01.1585	13.08	270031	00.9070	09.71	280045	01.1730	13.09	290013	01.1414	15.42	310032	01.2495	19.04
260115	01.1783	14.97	270032	01.1435	15.72	280046	01.0708	10.66	290014	00.9970	16.60	310034	01.2017	18.38
260116	01.1414	12.68	270033	00.8260	21.10	280047	01.1624	16.07	290015	00.9965	13.00	310036	01.2151	17.92
260119	01.1922	13.36	270035	00.9902	14.73	280048	01.0496	10.85	290016	01.3258	15.75	310037	01.2407	24.01
260120	01.2264	14.49	270036	01.0120	09.12	280049	01.1063	13.00	290018	00.9628	.	310038	01.7744	21.60
260122	01.1617	12.04	270039	00.9393	12.62	280050	01.0205	11.53	290019	01.2482	17.47	310039	01.2762	19.62
260123	01.0175	10.19	270040	01.0910	19.48	280051	01.0484	14.71	290020	01.2453	18.29	310040	01.2693	21.87
260127	00.9970	14.37	270041	01.0575	10.12	280052	01.1273	10.91	290021	01.5611	20.67	310041	01.2897	20.71
260128	01.0173	08.68	270044	01.2671	14.11	280054	01.2436	14.44	290022	01.6179	22.89	310042	01.1592	20.03
260129	01.1481	13.09	270046	00.9529	15.13	280055	00.9275	10.12	290027	01.0008	13.90	310043	01.1777	20.15
260131	01.3401	15.29	270048	01.0890	12.39	280056	01.0855	10.24	290029	00.8842	.	310044	01.3114	19.51
260134	01.1830	13.51	270049	01.7620	16.51	280057	00.9875	14.21	290032	01.3408	19.50	310045	01.3064	24.22
260137	01.2902	14.24	270050	01.0475	16.53	280058	01.1987	13.63	290036	00.9319	.	310047	01.2915	21.60
260138	01.8394	19.32	270051	01.2742	18.12	280060	01.5875	18.29	290037	01.7907	.	310048	01.2247	20.26
260141	01.8956	17.33	270052	01.0618	13.84	280061	01.4428	14.55	290038	01.0931	.	310049	01.2980	20.19

TABLE 3C : HOSPITAL CASE MIX INDEXES FOR DISCHARGES OCCURRING IN FEDERAL FISCAL YEAR 1994 PAGE 10 OF 16
: HOSPITAL AVERAGE HOURLY WAGE FOR FEDERAL FISCAL YEAR 1996 WAGE INDEX

PROVIDER	CASE MIX INDEX	AVG HOUR WAGE	PROVIDER	CASE MIX INDEX	AVG HOUR WAGE	PROVIDER	CASE MIX INDEX	AVG HOUR WAGE	PROVIDER	CASE MIX INDEX	AVG HOUR WAGE	PROVIDER	CASE MIX INDEX	AVG HOUR WAGE
310050	01.2030	20.49	320037	01.3911	12.74	330065	01.1534	16.59	330179	00.8591	12.51	330275	01.2062	18.08
310051	01.3237	22.94	320038	01.1899	14.49	330066	01.2981	17.69	330180	01.1664	15.30	330276	01.2084	16.38
310052	01.2360	19.44	320046	01.1693	18.36	330067	01.3225	20.03	330181	01.3010	27.47	330277	01.1320	16.03
310054	01.2844	22.08	320048	01.2846	14.65	330072	01.3593	26.92	330182	02.4588	26.19	330279	01.3526	16.68
310056	01.2288	18.60	320056	00.8895	.	330073	01.1863	13.21	330183	01.3734	18.32	330281	00.5583	23.06
310057	01.2639	18.67	320057	00.9598	.	330074	01.2542	16.33	330184	01.3459	23.78	330285	01.7016	20.80
310058	01.0982	22.53	320058	00.7660	.	330075	01.0771	16.05	330185	01.1739	22.60	330286	01.3009	22.10
310060	01.1759	15.81	320059	01.0491	.	330078	01.4359	16.93	330186	00.9235	19.17	330288	01.0139	17.60
310061	01.1733	18.96	320060	00.9540	.	330079	01.2713	15.57	330188	01.2090	16.77	330290	01.6414	27.25
310062	01.2969	26.21	320061	01.1685	.	330080	01.4187	23.57	330189	00.7331	12.31	330293	01.1264	13.51
310063	01.3241	20.46	320062	00.8973	.	330082	01.1692	17.10	330191	01.2901	18.01	330304	01.2705	23.24
310064	01.2666	20.47	320063	01.3202	15.46	330084	00.9852	15.94	330193	01.3462	24.81	330306	01.3735	24.98
310067	01.2600	20.34	320065	01.2445	17.01	330085	01.3446	17.49	330194	01.8181	24.91	330307	01.1700	17.06
310069	01.1728	17.01	320067	00.8528	10.34	330086	01.2502	23.08	330195	01.5806	27.49	330308	01.2472	25.87
310070	01.3493	21.58	320068	00.9107	16.83	330088	01.0951	22.97	330196	01.3971	24.23	330309	01.2088	23.47
310072	01.2319	19.41	320069	01.0842	13.56	330090	01.5125	16.20	330197	01.0478	14.34	330314	01.4374	20.37
310073	01.4787	20.82	320070	00.9475	.	330091	01.3689	17.15	330198	01.3567	21.30	330315	01.2257	23.02
310074	01.3229	20.59	320074	01.1140	17.57	330092	00.9972	14.04	330199	01.2709	23.25	330316	01.3068	24.11
310075	01.3141	20.49	320076	00.9991	16.21	330094	01.1819	14.91	330201	01.4456	24.83	330327	00.8767	15.44
310076	01.3234	26.50	320079	01.1700	18.53	330095	01.2895	16.47	330202	01.3263	24.21	330331	01.1760	25.65
310077	01.5002	22.03	320082	01.8075	.	330096	01.0614	13.38	330203	01.3402	18.69	330332	01.2888	22.41
310078	01.2825	22.45	330001	01.2025	23.04	330097	01.1328	14.94	330204	01.2788	23.88	330333	01.3040	23.11
310081	01.2168	19.38	330002	01.4111	23.83	330100	00.6672	24.57	330205	01.1697	17.54	330336	01.3505	27.66
310083	01.2420	21.39	330003	01.3159	17.37	330101	01.7797	29.73	330208	01.2272	22.74	330338	01.2400	22.06
310084	01.2072	20.18	330004	01.2528	19.60	330102	01.3523	16.65	330209	01.1832	20.37	330339	00.8753	17.94
310086	01.2172	19.30	330005	01.7600	18.94	330103	01.2509	15.29	330211	01.2937	15.74	330340	01.1609	23.73
310087	01.2319	18.62	330006	01.3258	22.97	330104	01.4254	25.67	330212	01.2040	19.47	330350	01.8093	26.95
310088	01.1805	18.95	330007	01.3212	16.67	330106	01.5652	30.29	330213	01.0894	15.58	330353	01.2865	28.01
310090	01.1950	21.84	330008	01.1338	16.15	330107	01.2039	22.95	330214	01.7031	26.97	330354	01.4571	.
310091	01.2436	18.79	330009	01.3358	27.98	330108	01.1980	15.71	330215	01.1503	16.55	330357	01.3464	29.51
310092	01.3914	19.24	330010	01.2092	14.32	330111	01.0850	14.47	330218	01.1658	15.36	330359	00.9389	19.17
310093	01.1416	19.43	330011	01.2422	16.56	330114	00.9193	15.00	330219	01.7040	18.75	330372	01.2552	21.28
310096	01.8907	21.72	330012	01.6220	25.64	330115	01.1828	14.41	330221	01.2759	25.64	330381	01.2142	26.55
310105	01.2372	20.43	330013	02.0595	16.90	330116	00.9591	13.68	330222	01.2457	15.21	330383	01.3267	.
310108	01.3620	19.35	330014	01.3608	26.33	330118	01.5831	17.30	330223	01.1043	15.86	330385	01.2129	25.28
310110	01.2144	19.27	330016	00.9870	15.57	330119	01.7130	28.24	330224	01.2642	18.82	330386	01.2327	19.79
310111	01.2450	18.13	330019	01.2238	23.83	330121	01.0631	13.42	330225	01.1526	23.75	330387	00.7536	36.27
310112	01.2942	19.38	330020	01.0888	14.70	330122	01.2865	21.37	330226	01.2847	16.82	330389	01.8064	28.55
310113	01.2254	19.35	330023	01.1796	21.41	330125	01.7401	18.89	330229	01.3336	14.48	330390	01.2023	24.96
310115	01.2387	18.84	330024	01.7976	27.93	330126	01.1444	18.06	330230	01.5709	25.52	330393	01.6768	25.15
310116	01.2163	20.61	330025	01.1658	13.75	330127	01.3509	24.53	330231	01.1358	26.24	330394	01.4868	17.26
310118	01.2105	21.18	330027	01.3892	29.92	330128	01.3226	24.90	330232	01.2362	14.65	330395	01.3333	26.58
310119	01.4822	28.06	330028	01.3546	23.16	330132	01.0782	13.15	330233	01.5305	30.00	330396	01.2500	23.30
310120	01.0808	17.02	330029	01.0943	16.36	330133	01.3332	28.20	330234	02.1343	27.03	330397	01.4738	23.47
310121	01.0706	17.85	330030	01.2364	15.26	330135	01.2226	16.47	330235	01.1623	16.46	330398	01.2122	25.84
320001	01.4339	16.14	330033	01.1981	13.36	330136	01.2642	19.79	330236	01.3580	25.04	330399	01.3112	27.41
320002	01.3536	21.36	330034	00.8595	28.99	330140	01.6863	17.07	330238	01.1396	13.64	340001	01.4369	18.69
320003	01.2308	14.20	330036	01.2249	21.09	330141	01.3469	23.29	330239	01.2249	14.38	340002	01.8167	17.46
320004	01.1170	16.38	330037	01.1794	14.71	330144	01.0370	13.45	330240	01.2854	26.16	340003	01.1534	17.44
320005	01.3222	18.36	330038	01.1893	13.86	330148	01.0305	13.70	330241	01.9179	20.81	340004	01.4848	16.48
320006	01.4251	14.16	330039	00.8647	13.51	330151	01.0547	12.53	330242	01.3372	20.60	340005	01.2414	12.65
320009	01.5144	16.90	330041	01.3598	26.05	330152	01.3917	26.57	330245	01.2452	17.22	340006	01.1132	14.19
320011	01.0253	17.65	330043	01.2323	23.05	330153	01.6401	17.53	330246	01.2727	22.67	340007	01.1599	14.94

320012	01.0392	17.37	330044	01.2034	16.10	330154	01.5518	.	330247	00.7913	25.42	340008	01.2237	15.82
320013	01.0916	17.38	330045	01.3997	23.27	330157	01.2562	18.01	330249	01.2356	15.87	340009	01.1554	19.21
320014	01.0526	09.02	330046	01.4792	26.80	330158	01.2950	22.12	330250	01.2330	15.40	340010	01.2993	15.46
320016	01.1594	14.52	330047	01.2170	16.37	330159	01.3175	17.37	330252	00.9049	15.14	340011	01.1066	13.94
320017	01.1495	17.38	330048	01.2656	15.50	330160	01.4507	27.75	330254	00.9907	15.51	340012	01.2160	15.39
320018	01.3994	16.77	330049	01.2678	16.39	330161	00.9430	15.60	330258	01.3620	23.96	340013	01.2152	14.57
320019	01.4807	18.67	330053	01.1259	14.20	330162	01.2568	24.16	330259	01.3531	21.30	340014	01.5868	18.83
320021	01.6995	20.73	330055	01.3739	27.96	330163	01.1584	16.79	330261	01.2167	23.08	340015	01.2435	15.33
320022	01.2421	17.51	330056	01.3499	26.51	330164	01.3512	18.48	330263	01.0427	15.85	340016	01.1498	15.63
320023	01.0473	14.13	330057	01.6001	17.28	330166	00.9861	13.97	330264	01.2551	19.42	340017	01.3015	14.51
320030	01.0672	18.67	330058	01.2660	15.35	330167	01.5885	26.67	330265	01.3466	14.35	340018	01.0837	14.66
320031	00.9676	11.41	330059	01.5813	27.24	330169	01.4501	29.07	330267	01.2472	21.76	340019	01.0409	10.97
320032	00.9759	20.28	330061	01.3144	22.35	330171	01.2987	21.23	330268	01.0083	14.96	340020	01.2222	19.33
320033	01.0836	19.40	330062	01.0626	15.08	330175	01.1046	13.41	330270	01.9646	27.18	340021	01.2373	15.10
320035	01.1627	13.24	330064	01.3860	27.78	330177	01.0500	12.91	330273	01.2857	21.42	340022	01.0849	14.07

TABLE 3C : HOSPITAL CASE MIX INDEXES FOR DISCHARGES OCCURRING IN FEDERAL FISCAL YEAR 1994 PAGE 11 OF 16
: HOSPITAL AVERAGE HOURLY WAGE FOR FEDERAL FISCAL YEAR 1996 WAGE INDEX

PROVIDER	CASE MIX INDEX	AVG HOUR WAGE	PROVIDER	CASE MIX INDEX	AVG HOUR WAGE	PROVIDER	CASE MIX INDEX	AVG HOUR WAGE	PROVIDER	CASE MIX INDEX	AVG HOUR WAGE	PROVIDER	CASE MIX INDEX	AVG HOUR WAGE
340023	01.3550	16.96	340119	01.2835	14.92	350035	00.8461	10.06	360056	01.4059	14.80	360132	01.3047	18.64
340024	01.2109	14.35	340120	01.0614	12.83	350038	01.0009	13.01	360057	01.0607	12.70	360133	01.4341	17.01
340025	01.1092	14.27	340121	01.0972	13.86	350039	01.0341	13.65	360058	01.1742	15.10	360134	01.6312	17.77
340027	01.2031	14.87	340122	01.0070	12.44	350041	01.0454	11.63	360059	01.5275	19.69	360135	01.1408	15.15
340028	01.5085	16.47	340123	01.1038	12.23	350042	01.0125	13.85	360062	01.4461	17.73	360136	01.0356	13.92
340030	01.9232	18.03	340124	01.0588	13.16	350043	01.4048	15.08	360063	01.0363	16.18	360137	01.5585	17.61
340031	01.0089	11.38	340125	01.4101	16.38	350044	00.8713	10.01	360064	01.4608	18.71	360140	00.9970	15.13
340032	01.2698	16.65	340126	01.4004	16.98	350047	01.1514	15.98	360065	01.2565	16.01	360141	01.4439	19.09
340034	01.2862	17.25	340127	01.3145	15.68	350049	01.1017	09.92	360066	01.3242	15.87	360142	00.9938	14.51
340035	01.1041	14.24	340129	01.2777	18.25	350050	01.0066	10.35	360067	01.1116	11.73	360143	01.3137	17.32
340036	01.2278	16.39	340130	01.3396	15.99	350051	00.9666	11.29	360068	01.6349	21.67	360144	01.3260	19.94
340037	01.1623	13.39	340131	01.3781	15.66	350053	01.0353	09.16	360069	01.0654	15.90	360145	01.6488	15.94
340038	01.1623	15.33	340132	01.2664	12.81	350055	00.9458	11.52	360070	01.5787	16.33	360147	01.2621	14.83
340039	01.2748	18.01	340133	01.1129	14.24	350056	00.9552	12.07	360071	01.2903	15.64	360148	01.1778	15.29
340040	01.7266	17.23	340136	01.0941	16.92	350058	01.0054	11.46	360072	01.1545	14.77	360149	01.1368	16.99
340041	01.2497	15.28	340137	01.1819	13.07	350060	00.9107	07.20	360074	01.3482	18.12	360150	01.3086	16.70
340042	01.1072	13.11	340138	01.1344	14.31	350061	01.0521	14.13	360075	01.4126	18.42	360151	01.3504	16.20
340044	01.0386	12.58	340141	01.5344	18.20	350063	00.8101	.	360076	01.3055	17.06	360152	01.5227	17.02
340045	01.0077	08.49	340142	01.1851	15.16	350064	00.8179	.	360077	01.4411	18.22	360153	01.1421	13.32
340047	01.8767	17.36	340143	01.3364	18.30	350065	00.8966	.	360078	01.2814	18.19	360154	01.0536	12.01
340048	00.7695	.	340144	01.3552	16.96	350066	00.8594	.	360079	01.6856	19.06	360155	01.3080	18.05
340049	00.6050	15.68	340145	01.2862	15.79	360001	01.2751	16.58	360080	01.0817	14.79	360156	01.3298	16.30
340050	01.1903	16.12	340146	01.0941	12.76	360002	01.1542	14.90	360081	01.3814	18.30	360159	01.1493	17.70
340051	01.2450	15.76	340147	01.2917	16.80	360003	01.7200	19.44	360082	01.2954	18.90	360161	01.3493	18.52
340052	01.0201	18.45	340148	01.4232	17.75	360006	01.7261	19.60	360083	01.2887	15.60	360162	01.1971	15.50
340053	01.6177	18.66	340151	01.1788	13.81	360007	01.0536	15.57	360084	01.6287	17.81	360163	01.8234	18.81
340054	01.0766	12.74	340153	01.9573	19.41	360008	01.2404	15.05	360085	01.7830	18.85	360164	00.8895	13.53
340055	01.2122	16.29	340154	01.1004	14.94	360009	01.3556	17.14	360086	01.4651	15.62	360165	01.1266	14.66
340060	01.1346	15.32	340155	01.4462	19.22	360010	01.1694	15.09	360087	01.3559	17.19	360166	01.1591	16.68
340061	01.6944	18.19	340156	00.7809	.	360011	01.2327	17.13	360088	01.2265	15.09	360169	01.0169	16.77
340063	01.0868	14.50	340158	01.1618	16.37	360012	01.2491	18.10	360089	01.1103	16.37	360170	01.1996	17.19
340064	01.2245	15.87	340159	01.1342	15.36	360013	01.1092	15.10	360090	01.2147	18.32	360172	01.4114	16.01
340065	01.2567	11.40	340160	01.1428	12.04	360014	01.1327	16.24	360091	01.2673	18.20	360174	01.2614	16.86
340067	01.2065	13.69	340162	01.3238	16.41	360016	01.5669	17.58	360092	01.3130	17.29	360175	01.2630	17.31
340068	01.2924	12.84	340164	01.4102	17.72	360017	01.6526	19.27	360093	01.2079	15.93	360176	01.1881	13.50
340069	01.6469	17.99	340166	01.3836	18.78	360018	01.5903	18.12	360094	01.2333	19.09	360177	01.2545	15.44
340070	01.2851	16.21	340168	00.4889	16.61	360019	01.2598	18.17	360095	01.3223	15.76	360178	01.2500	15.16
340071	01.0201	13.98	340170	01.2903	.	360020	01.4352	17.58	360096	01.0975	15.60	360179	01.3025	18.53
340072	01.0999	13.96	340171	01.0667	.	360021	01.2305	17.68	360098	01.3841	17.38	360180	02.0910	22.00
340073	01.4138	19.33	350001	01.1048	11.68	360024	01.4170	17.78	360099	00.9954	15.45	360184	00.5700	15.74
340075	01.2132	15.40	350002	01.7411	16.34	360025	01.1612	16.49	360100	01.3241	15.79	360185	01.2247	16.35
340080	01.1471	10.79	350003	01.1719	15.20	360026	01.1445	15.74	360101	01.7078	19.44	360186	01.2043	15.60
340084	01.0656	13.21	350004	01.9173	17.01	360027	01.5514	18.78	360102	01.2217	18.95	360187	01.2741	15.63
340085	01.2368	14.60	350005	01.1550	11.38	360028	01.3585	15.35	360103	01.3613	19.18	360188	01.0233	14.47
340087	01.2049	16.57	350006	01.3146	15.87	360029	01.1343	15.69	360104	01.2108	18.94	360189	01.0665	14.86
340088	01.1536	16.20	350007	00.9766	11.64	360030	01.1082	14.24	360106	01.0769	14.17	360192	01.3030	18.10
340089	00.9588	11.53	350008	01.0299	17.11	360031	01.2726	14.01	360107	01.2605	15.52	360193	01.2998	14.39
340090	01.1095	15.15	350009	01.1708	15.04	360032	01.1027	15.34	360108	01.0484	14.22	360194	01.1140	15.67
340091	01.6948	18.09	350010	01.0965	11.48	360034	01.2285	12.05	360109	01.0923	16.95	360195	01.1674	16.12
340093	01.0962	12.41	350011	01.8066	16.90	360035	01.5046	19.25	360112	01.7072	19.83	360197	01.1620	16.55
340094	01.2544	16.46	350012	01.0575	11.94	360036	01.1674	16.98	360113	01.3402	17.68	360200	01.0669	12.61
340096	01.2482	15.59	350013	01.1191	14.23	360037	02.0791	19.73	360114	01.1337	15.45	360203	01.1257	15.23
340097	01.1638	14.13	350014	01.0811	10.84	360038	01.5350	17.06	360115	01.2278	18.39	360204	01.2134	15.84

340098	01.6532	17.10
340099	01.1571	13.04
340100	00.9781	.
340101	00.9979	11.37
340104	00.9394	10.52
340105	01.3279	17.43
340106	01.0977	16.14
340107	01.2656	15.88
340109	01.3012	15.08
340111	01.2302	13.16
340112	01.0248	12.98
340113	01.9570	19.22
340114	01.4375	18.91
340115	01.5511	16.94
340116	01.7560	19.43
350015	01.5980	15.49
350016	01.0047	10.29
350017	01.3965	14.02
350018	01.1060	10.15
350019	01.5964	17.70
350020	01.3462	15.80
350021	01.0702	10.47
350023	00.8747	14.45
350024	01.0866	12.46
350025	01.0046	13.17
350027	00.9928	13.76
350029	00.9486	10.79
350030	01.0763	15.42
350033	00.9413	13.28
350034	00.9863	14.00
360039	01.2949	15.46
360040	01.2773	17.57
360041	01.3231	17.13
360042	01.1302	15.94
360044	01.0991	15.06
360045	01.5151	19.48
360046	01.0674	17.35
360047	01.1673	13.68
360048	01.7619	20.91
360049	01.3457	17.28
360050	01.1011	11.62
360051	01.4651	19.97
360052	01.6718	17.01
360054	01.2302	14.87
360055	01.1877	17.07
360116	01.0494	15.21
360118	01.3339	16.33
360119	01.2451	16.21
360120	00.6082	.
360121	01.2481	16.95
360122	01.3134	17.12
360123	01.2135	17.97
360124	01.2506	16.62
360125	01.0862	15.71
360126	01.2400	18.24
360127	01.0980	15.24
360128	01.1123	13.39
360129	01.0144	13.31
360130	01.0784	13.93
360131	01.2765	16.41
360210	01.1866	18.60
360211	01.1839	17.02
360212	01.4128	18.54
360213	01.1331	15.72
360218	01.2483	15.77
360230	01.2914	19.39
360231	01.1019	12.30
360232	01.2332	20.25
360234	01.3137	17.37
360236	01.1994	16.82
360238	01.0795	.
360239	01.1692	18.44
360240	00.4529	09.64
360241	00.6131	16.19
360242	01.6782	.

TABLE 3C : HOSPITAL CASE MIX INDEXES FOR DISCHARGES OCCURRING IN FEDERAL FISCAL YEAR 1994 PAGE 12 OF 16
: HOSPITAL AVERAGE HOURLY WAGE FOR FEDERAL FISCAL YEAR 1996 WAGE INDEX

PROVIDER	CASE MIX INDEX	AVG HOUR WAGE	PROVIDER	CASE MIX INDEX	AVG HOUR WAGE	PROVIDER	CASE MIX INDEX	AVG HOUR WAGE	PROVIDER	CASE MIX INDEX	AVG HOUR WAGE	PROVIDER	CASE MIX INDEX	AVG HOUR WAGE
360243	00.8369	15.66	370091	01.6539	15.44	380018	01.7772	18.54	390019	01.1193	15.02	390102	01.3555	19.54
360244	00.8155	14.72	370092	01.0460	11.97	380019	01.1937	17.57	390022	01.3581	20.09	390103	01.0911	16.83
360245	00.8647	14.97	370093	01.8084	18.31	380020	01.4635	19.42	390023	01.2587	20.25	390104	01.1240	13.92
360246	00.8163	.	370094	01.3512	16.33	380021	01.2005	19.11	390024	00.7628	21.76	390106	00.9496	16.62
370001	01.7483	18.38	370095	00.9043	10.78	380022	01.1825	17.88	390025	00.7525	15.82	390107	01.2134	17.78
370002	01.2088	13.52	370097	01.3556	18.32	380023	01.2895	16.49	390026	01.2631	20.06	390108	01.3503	17.21
370004	01.3075	13.98	370099	01.1999	13.57	380025	01.2513	21.04	390027	01.9400	21.93	390109	01.1403	13.32
370005	01.0169	11.96	370100	00.9933	10.79	380026	01.3246	16.19	390028	01.7671	18.59	390110	01.5478	17.47
370006	01.1851	14.35	370103	00.9364	11.13	380027	01.2238	18.77	390029	01.7506	17.52	390111	01.7840	26.50
370007	01.1269	13.12	370105	01.9322	16.18	380029	01.1936	15.70	390030	01.2138	15.42	390112	01.1978	12.38
370008	01.3946	14.97	370106	01.4839	16.09	380031	01.0035	14.64	390031	01.1386	17.02	390113	01.2116	14.98
370011	01.0547	13.17	370108	01.0799	10.32	380033	01.6750	21.91	390032	01.2180	17.70	390114	01.0998	20.24
370012	00.9141	11.46	370112	01.0604	11.98	380035	01.3451	18.88	390035	01.2991	17.23	390115	01.3234	20.80
370013	01.7194	17.86	370113	01.1332	13.21	380036	01.0261	16.34	390036	01.2554	16.92	390116	01.1802	19.21
370014	01.2863	17.05	370114	01.6234	14.92	380037	01.2551	19.57	390037	01.2981	17.90	390117	01.1281	15.07
370015	01.2353	13.90	370121	01.2113	13.37	380038	01.3261	20.55	390039	01.0790	15.36	390118	01.2374	15.74
370016	01.3736	15.42	370122	01.1447	09.31	380039	01.2667	20.17	390040	00.9405	12.87	390119	01.3646	17.02
370017	01.1321	10.87	370123	01.2211	13.70	380040	01.3369	18.06	390041	01.2781	17.41	390121	01.3200	17.22
370018	01.2927	16.87	370125	00.9700	11.42	380042	01.1742	21.92	390042	01.3859	20.08	390122	01.0399	15.47
370019	01.3563	11.35	370126	01.1624	09.48	380047	01.6445	19.29	390043	01.0942	14.27	390123	01.2531	19.42
370020	01.3029	11.92	370131	00.9524	12.42	380048	01.0224	13.14	390044	01.5680	18.24	390125	01.2040	15.75
370021	00.9282	10.11	370133	01.0785	09.65	380050	01.3158	16.38	390045	01.5160	16.69	390126	01.2801	20.35
370022	01.3185	15.01	370138	01.0867	15.75	380051	01.5308	18.38	390046	01.4881	17.71	390127	01.1724	19.86
370023	01.3429	14.52	370139	00.9485	09.78	380052	01.1597	15.90	390047	01.6149	22.95	390128	01.1730	17.17
370025	01.3501	14.57	370140	00.9629	11.36	380055	01.1773	23.98	390048	01.1705	15.25	390130	01.1060	17.23
370026	01.4724	15.54	370141	01.3538	19.76	380056	01.0295	15.19	390049	01.5135	19.09	390131	01.2491	15.35
370028	01.7975	17.10	370146	01.2007	10.18	380060	01.4358	21.21	390050	02.0193	20.30	390132	01.2301	18.08
370029	01.2347	11.52	370148	01.4192	17.76	380061	01.5098	21.74	390051	02.1938	23.77	390133	01.7629	20.23
370030	01.2301	11.25	370149	01.1570	14.18	380062	01.1147	13.68	390052	01.1456	15.52	390135	01.2408	19.41
370032	01.4601	14.67	370153	01.0840	14.50	380063	01.2689	22.15	390054	01.1476	13.42	390136	01.2122	15.59
370033	01.1603	10.89	370154	01.0296	12.64	380064	01.3413	18.16	390055	01.7090	20.40	390137	01.1705	17.43
370034	01.2258	12.87	370156	01.1272	12.99	380065	00.9846	19.00	390056	01.1719	15.60	390138	01.2407	16.41
370035	01.5377	14.65	370158	01.0246	12.52	380066	01.3474	17.09	390057	01.2889	18.37	390139	01.4609	21.08
370036	01.0331	09.08	370159	01.3422	13.48	380068	01.0131	18.61	390058	01.2874	16.75	390142	01.6697	21.77
370037	01.5889	15.66	370163	00.9112	10.33	380069	01.1384	17.14	390060	01.1133	15.65	390145	01.3349	18.30
370038	00.9669	10.86	370165	01.1693	11.10	380070	01.2749	19.47	390061	01.5073	20.59	390146	01.2323	15.37
370039	01.2996	15.91	370166	01.1522	16.13	380071	01.2975	19.74	390062	01.1217	14.75	390147	01.2319	18.19
370040	01.0682	11.17	370169	01.0487	10.14	380072	00.9285	14.25	390063	01.7184	18.14	390148	01.1856	17.53
370041	00.9321	13.21	370170	00.9482	.	380075	01.4140	19.35	390064	01.5125	15.84	390149	01.2351	19.33
370042	00.8268	11.93	370171	01.0185	.	380078	01.0297	16.80	390065	01.2190	17.97	390150	01.1451	17.62
370043	01.0168	11.72	370172	00.8554	.	380081	01.0934	16.57	390066	01.3023	16.55	390151	01.3012	17.35
370045	01.0510	10.29	370173	01.2957	.	380082	01.3225	20.54	390067	01.7301	18.65	390152	01.0221	15.13
370046	00.9422	13.17	370174	00.5927	.	380083	01.3305	17.08	390068	01.3103	17.00	390153	01.1959	21.16
370047	01.3191	13.84	370176	01.1808	16.22	380084	01.2634	18.54	390069	01.2845	18.31	390154	01.1635	13.64
370048	01.1508	12.59	370177	00.9288	10.16	380087	01.0074	13.59	390070	01.3176	19.08	390155	01.3023	17.65
370049	01.3213	15.14	370178	00.9808	10.53	380088	00.9674	15.05	390071	01.0958	13.09	390156	01.3745	21.65
370051	00.9506	13.39	370179	00.8559	13.14	380089	01.2969	20.02	390072	01.0746	15.84	390157	01.2567	16.75
370054	01.2308	14.66	370180	00.9909	.	380090	01.3075	21.62	390073	01.5165	17.44	390158	01.4555	18.63
370056	01.5009	15.57	370183	01.2653	12.03	380091	01.1975	23.39	390074	01.2311	16.29	390159	01.2938	19.66
370057	01.1448	14.30	370186	00.9700	10.36	380897	04.7333	.	390075	01.3378	15.51	390160	01.1993	17.44
370059	01.1393	12.80	370189	01.0906	11.81	390001	01.2927	17.00	390076	01.2510	19.48	390161	01.0409	13.71
370060	01.0916	14.13	370190	01.6173	18.00	390002	01.3102	17.45	390078	01.0454	14.92	390162	01.3087	19.03
370063	01.1312	10.89	370192	01.0518	.	390003	01.2089	16.14	390079	01.6734	15.99	390163	01.1814	16.45

370064	00.9690	09.12
370065	01.0838	14.46
370071	01.0279	10.53
370072	00.9502	11.89
370076	01.2814	11.71
370077	01.3665	15.34
370078	01.6906	14.47
370079	00.9182	11.99
370080	00.9812	11.31
370082	00.9236	10.23
370083	01.0324	10.99
370084	01.0520	08.49
370085	00.8086	12.79
370086	01.1609	09.53
370089	01.2782	11.32
370193	01.3888	.
380001	01.2938	18.46
380002	01.2492	17.64
380003	01.1829	17.46
380004	01.6219	22.25
380005	01.1604	19.10
380006	01.3725	16.46
380007	01.6280	20.55
380008	01.0648	16.93
380009	01.8073	21.55
380010	01.0996	19.18
380011	01.1556	14.12
380013	01.1859	19.76
380014	01.3831	18.00
380017	01.7690	21.74
390004	01.3573	16.37
390005	01.0212	13.53
390006	01.7675	17.25
390007	01.1637	20.95
390008	01.0940	15.45
390009	01.6043	17.97
390010	01.2036	16.98
390011	01.1955	16.82
390012	01.2114	18.59
390013	01.2017	15.89
390014	01.5635	15.29
390015	01.1326	12.32
390016	01.1962	15.75
390017	01.1843	13.74
390018	01.1906	18.44
390080	01.2210	17.76
390081	01.2961	19.78
390083	01.1854	20.41
390084	01.2275	14.79
390086	01.0903	15.51
390088	01.3462	19.25
390090	01.7200	19.42
390091	01.1466	18.41
390093	01.1717	14.61
390095	01.1723	14.43
390096	01.2821	16.50
390097	01.3212	20.40
390098	01.7237	19.80
390100	01.6555	18.56
390101	01.2382	15.40
390164	01.8481	18.93
390166	01.1611	16.81
390167	01.2628	20.38
390168	01.1938	17.18
390169	01.2110	17.22
390170	01.8613	23.09
390173	01.1971	17.58
390174	01.6952	23.23
390176	01.1345	16.28
390178	01.2804	17.36
390179	01.2582	20.45
390180	01.5840	22.45
390181	01.0572	16.72
390183	01.1591	17.15
390184	01.1173	17.14

TABLE 3C : HOSPITAL CASE MIX INDEXES FOR DISCHARGES OCCURRING IN FEDERAL FISCAL YEAR 1994 PAGE 13 OF 16
: HOSPITAL AVERAGE HOURLY WAGE FOR FEDERAL FISCAL YEAR 1996 WAGE INDEX

PROVIDER	CASE MIX INDEX	AVG HOUR WAGE	PROVIDER	CASE MIX INDEX	AVG HOUR WAGE	PROVIDER	CASE MIX INDEX	AVG HOUR WAGE	PROVIDER	CASE MIX INDEX	AVG HOUR WAGE	PROVIDER	CASE MIX INDEX	AVG HOUR WAGE
390185	01.1718	15.64	400012	01.1149	07.24	420022	00.9393	15.80	430022	00.9360	10.22	440032	01.0077	12.50
390186	01.1789	12.18	400013	01.1641	09.09	420023	01.3901	18.61	430023	00.9430	09.74	440033	01.1147	14.66
390189	01.0731	16.34	400014	01.4215	07.32	420026	01.8477	17.80	430024	00.8379	11.51	440034	01.4702	17.16
390191	01.0449	14.03	400015	01.3504	10.35	420027	01.3695	14.55	430025	00.9418	10.29	440035	01.2831	14.81
390192	01.1109	16.42	400016	01.3534	09.54	420028	01.0490	.	430026	01.0150	10.38	440039	01.5587	16.47
390193	01.1498	15.76	400017	01.1639	06.80	420029	01.7205	13.98	430027	01.7383	16.35	440040	00.9564	11.47
390194	01.0786	18.49	400018	01.2973	08.17	420030	01.2783	17.01	430028	01.0746	12.21	440041	01.0368	12.55
390195	01.8123	21.40	400019	01.6158	09.32	420031	01.0044	10.97	430029	01.0025	12.56	440046	01.3482	14.06
390196	01.3612	.	400021	01.3491	07.96	420033	01.2478	18.56	430031	00.9432	10.95	440047	00.9823	12.05
390197	01.2700	18.62	400022	01.3082	09.80	420035	00.8157	11.93	430033	01.0809	11.10	440048	01.7486	15.85
390198	01.2284	14.41	400024	00.9856	07.75	420036	01.2248	14.90	430034	01.0196	10.93	440049	01.6362	15.45
390199	01.2212	14.46	400026	00.9401	07.20	420037	01.3165	19.35	430036	01.0422	09.44	440050	01.2414	13.86
390200	01.0088	12.74	400027	01.1220	06.87	420038	01.2365	14.65	430037	00.9534	12.46	440051	00.8911	13.44
390201	01.2926	18.28	400028	01.1461	07.04	420039	01.2259	13.96	430038	01.0431	10.31	440052	01.2705	17.91
390203	01.3074	18.63	400029	01.1139	07.59	420040	01.2111	14.36	430039	00.9752	10.63	440053	01.2974	16.09
390204	01.2606	18.31	400031	01.0357	07.33	420042	01.1952	13.01	430040	00.9058	11.88	440054	01.2354	13.93
390205	01.2221	22.42	400032	01.1755	07.75	420043	01.1783	16.87	430041	00.9689	11.58	440056	01.0762	10.33
390206	01.3646	19.80	400044	01.1285	09.07	420044	01.1943	15.94	430042	01.0001	10.28	440057	01.0273	10.50
390209	01.0362	14.45	400048	01.0975	06.84	420048	01.1163	13.96	430043	01.1216	12.47	440058	01.3856	18.36
390211	01.2078	16.56	400061	01.4681	12.57	420049	01.1453	14.52	430044	00.9352	12.62	440059	01.1588	13.84
390213	01.0987	14.10	400079	01.2472	09.48	420051	01.5745	16.86	430047	01.1183	11.03	440060	01.1408	13.95
390215	01.1563	20.50	400087	01.3329	08.37	420053	01.0686	14.21	430048	01.2132	15.58	440061	01.1563	14.49
390217	01.2283	17.56	400094	01.0187	07.41	420054	01.3914	16.63	430049	00.9369	11.35	440063	01.5540	17.05
390219	01.2464	15.84	400098	01.2471	07.46	420055	01.1253	12.86	430051	00.9728	11.88	440064	01.1852	15.29
390220	01.1990	18.50	400102	01.2012	07.47	420056	01.0954	13.40	430054	00.9384	14.12	440065	01.2164	14.09
390222	01.2927	19.29	400103	01.4821	10.21	420057	01.2767	12.58	430056	00.8629	08.95	440067	01.1698	15.85
390223	01.6248	22.05	400104	01.1981	09.13	420059	00.9574	13.16	430057	00.9145	10.35	440068	01.1836	16.22
390224	00.9135	13.29	400105	01.2588	07.81	420061	01.2214	15.48	430060	00.9948	08.97	440069	01.0864	13.34
390225	01.2275	15.41	400106	01.2429	07.28	420062	01.4747	15.07	430062	00.8308	10.10	440070	01.1366	13.07
390226	01.7063	22.03	400109	01.5809	08.35	420064	01.1417	12.36	430064	01.1552	11.35	440071	01.4747	15.36
390228	01.1941	17.98	400110	01.1028	08.90	420065	01.3473	16.17	430065	01.0287	09.01	440072	01.4302	13.45
390231	01.3455	20.59	400111	01.1492	07.90	420066	00.9409	13.87	430066	00.9830	10.61	440073	01.2755	16.16
390233	01.2760	17.67	400112	01.2638	07.00	420067	01.1962	15.84	430073	01.1954	13.35	440078	00.9788	12.17
390235	01.7555	23.03	400113	01.1820	06.62	420068	01.2581	15.36	430076	00.9625	08.60	440081	01.1418	14.51
390236	01.1545	16.00	400114	01.0671	07.53	420069	01.0824	13.87	430077	01.5442	15.65	440082	01.8967	19.65
390237	01.5578	18.82	400115	01.0129	07.95	420070	01.2550	15.79	430079	00.9504	10.60	440083	01.1678	10.26
390238	01.0894	16.51	400117	01.2063	07.66	420071	01.3374	15.95	430080	00.5828	08.87	440084	01.1720	11.11
390242	01.3231	18.78	400118	01.1444	07.05	420072	01.0073	09.92	430081	00.9862	.	440087	00.9821	11.67
390244	00.9175	12.37	400120	01.2843	08.63	420073	01.2939	17.80	430082	00.7926	.	440090	00.9795	13.53
390245	01.3588	20.09	400121	00.9107	07.33	420074	00.9531	09.76	430083	00.8485	.	440091	01.5333	16.83
390246	01.1551	15.60	400122	00.9802	06.35	420075	01.0336	13.97	430084	00.8843	.	440095	01.2191	19.62
390247	01.0093	16.83	400123	01.1528	08.39	420076	01.1230	20.04	430085	00.8528	.	440100	01.0234	12.92
390249	00.9960	11.06	400124	02.7780	.	420078	01.7110	18.26	430087	00.9503	09.28	440102	01.0922	12.32
390256	01.6957	20.51	410001	01.3209	21.94	420079	01.5228	17.23	440001	01.1440	11.96	440103	01.2370	16.26
390258	01.3249	19.30	410004	01.3533	20.28	420080	01.2211	17.43	440002	01.5767	16.12	440104	01.5503	17.72
390260	01.2434	17.74	410005	01.3598	20.46	420081	00.8050	18.55	440003	01.0998	14.90	440105	01.4106	16.93
390262	01.9010	17.06	410006	01.2125	21.65	420082	01.3442	18.34	440006	01.4878	16.87	440109	01.0498	12.33
390263	01.4743	18.55	410007	01.6861	19.83	420083	01.2185	17.28	440007	01.0120	11.40	440110	00.9974	14.21
390265	01.3080	17.62	410008	01.1749	20.30	420084	00.9441	12.71	440008	01.0304	14.41	440111	01.3889	18.41
390266	01.2009	15.69	410009	01.3426	20.77	420085	01.2808	17.16	440009	01.1194	12.87	440114	01.0190	11.73
390267	01.2663	19.03	410010	01.0332	24.28	420086	01.3990	16.97	440010	00.9249	10.52	440115	01.0929	13.98
390268	01.3843	19.24	410011	01.2186	21.48	420087	01.6082	15.64	440011	01.2475	15.18	440120	01.4792	15.84
390270	01.3057	16.33	410012	01.7233	18.98	420088	01.1712	16.05	440012	01.4267	16.29	440121	01.9731	.

390272	00.5343	20.70	410013	01.2540	24.87	420089	01.2361	19.72	440014	00.9938	10.17	440125	01.4144	16.36
390277	00.5696	19.80	420002	01.3074	20.09	420091	01.1909	15.91	440015	01.5329	15.38	440130	01.1226	13.51
390278	00.8172	16.44	420004	01.8544	17.72	430004	01.0162	14.56	440016	00.9712	10.91	440131	01.0835	13.17
390279	01.1372	.	420005	01.1296	14.18	430005	01.2519	13.79	440017	01.5838	17.33	440132	01.1210	13.29
390280	00.8651	.	420006	01.3166	15.86	430007	01.1252	11.45	440018	01.4908	15.33	440133	01.5288	17.70
400001	01.2173	08.19	420007	01.5035	15.99	430008	01.1388	13.47	440019	01.5844	18.39	440135	01.3487	19.68
400002	01.4216	10.39	420009	01.2547	15.89	430009	01.0914	10.81	440020	01.2176	16.73	440137	00.9661	11.88
400003	01.2202	08.29	420010	01.0837	13.17	430010	01.1130	08.78	440022	01.2005	12.79	440141	01.1785	12.78
400004	01.2104	08.02	420011	01.0974	14.00	430011	01.3679	14.10	440023	01.0130	11.52	440142	01.0557	10.83
400005	01.0899	06.34	420014	01.0743	13.05	430012	01.3040	13.87	440024	01.3778	16.35	440143	01.0968	16.30
400006	01.2527	06.86	420015	01.3697	16.20	430013	01.2002	15.09	440025	01.0792	12.19	440144	01.2164	17.90
400007	01.1885	07.19	420016	01.1263	13.46	430014	01.2722	15.64	440026	00.9153	15.63	440145	01.0472	13.40
400009	00.9592	07.08	420018	01.6630	17.26	430015	01.1972	13.84	440029	01.3367	15.62	440146	01.3506	12.03
400010	00.9770	07.87	420019	01.2123	14.47	430016	01.6937	17.29	440030	01.1489	12.68	440148	01.1560	15.66
400011	01.0699	06.77	420020	01.2555	15.92	430018	00.9520	13.20	440031	00.9730	11.83	440149	01.2184	15.74

TABLE 3C : HOSPITAL CASE MIX INDEXES FOR DISCHARGES OCCURRING IN FEDERAL FISCAL YEAR 1994 PAGE 14 OF 16
: HOSPITAL AVERAGE HOURLY WAGE FOR FEDERAL FISCAL YEAR 1996 WAGE INDEX

PROVIDER	CASE MIX INDEX	AVG HOUR WAGE	PROVIDER	CASE MIX INDEX	AVG HOUR WAGE	PROVIDER	CASE MIX INDEX	AVG HOUR WAGE	PROVIDER	CASE MIX INDEX	AVG HOUR WAGE	PROVIDER	CASE MIX INDEX	AVG HOUR WAGE
440150	01.2567	18.75	450054	01.7322	21.09	450157	01.0319	14.31	450297	00.8953	13.66	450473	01.0507	15.90
440151	01.4181	15.89	450055	01.1133	11.71	450160	00.9377	17.51	450299	01.4163	17.66	450475	01.1869	14.99
440152	01.6568	17.32	450056	01.6529	17.62	450162	01.1951	17.13	450303	00.9714	10.74	450484	01.5148	17.72
440153	01.2680	14.46	450058	01.5214	14.43	450163	01.1436	16.18	450306	01.0838	11.84	450488	01.2240	19.43
440156	01.5223	18.76	450059	01.2797	12.62	450164	01.1313	12.97	450307	01.0024	13.59	450489	00.9978	14.86
440157	01.0026	13.12	450060	01.3775	19.96	450165	01.0056	14.05	450309	01.0534	11.15	450497	01.1595	12.55
440159	01.2399	15.52	150063	01.0234	11.54	450166	00.9214	11.39	450315	01.2141	19.84	450498	01.1236	13.21
440161	01.5953	20.02	450064	01.5133	14.88	450169	00.8646	14.45	450320	01.3638	17.73	450508	01.5586	15.68
440166	01.3898	17.40	450065	01.1215	10.61	450170	00.9873	12.30	450321	00.9808	10.98	450514	01.1825	14.53
440168	01.0180	13.32	450068	01.7808	17.27	450176	01.2600	14.33	450322	00.8936	15.26	450517	01.0193	11.00
440173	01.4919	16.51	450070	01.1697	13.40	450177	01.1406	12.36	450324	01.5529	15.52	450518	01.5159	13.99
440174	00.9739	14.29	450072	01.2267	17.28	450178	01.0821	15.65	450325	01.1914	09.56	450523	01.5630	20.04
440175	01.2429	17.24	450073	01.1179	10.92	450181	00.9083	11.58	450327	00.9889	10.00	450530	01.2869	16.03
440176	01.3083	17.31	450074	00.8549	16.51	450184	01.4967	19.42	450330	01.1766	14.47	450534	00.9327	17.01
440178	01.2158	18.01	450076	01.5279	.	450185	01.1278	09.25	450334	01.0054	11.79	450535	01.1954	16.74
440180	01.1388	16.13	450078	00.9573	10.69	450187	01.3341	15.83	450337	01.2762	14.42	450537	01.3805	18.07
440181	01.0420	12.30	450079	01.4454	19.51	450188	00.9826	12.13	450340	01.3349	14.79	450538	01.2261	18.62
440182	00.9107	14.69	450080	01.2509	14.43	450190	01.1800	17.82	450341	00.9760	16.17	450539	01.2708	14.11
440183	01.4835	15.92	450081	01.0910	12.40	450191	01.1081	15.11	450346	01.3850	15.86	450544	01.4414	19.57
440184	01.4116	18.01	450082	00.9795	14.21	450192	01.0661	15.77	450347	01.1384	14.95	450545	01.1871	16.75
440185	01.0004	17.19	450083	01.7014	16.91	450193	01.8415	20.38	450348	00.9948	10.99	450546	01.3027	15.56
440186	01.2176	16.57	450085	01.1188	13.44	450194	01.2636	16.17	450349	01.0972	25.54	450547	01.1790	13.04
440187	01.2364	16.64	450087	01.4775	20.39	450195	01.1679	17.01	450351	01.2382	20.82	450550	00.9798	17.28
440189	01.4621	16.08	450090	01.0830	11.92	450196	01.4810	14.88	450352	01.1506	15.51	450551	01.1343	12.64
440192	01.1114	14.00	450092	01.3841	12.51	450197	01.1528	18.20	450353	01.3046	12.71	450558	01.7459	18.18
440193	01.3107	17.42	450094	01.2963	17.42	450200	01.4302	15.19	450355	01.1441	11.43	450559	00.8840	10.67
440194	01.3045	17.11	450096	01.4953	16.57	450201	00.9844	14.55	450358	02.0877	19.02	450561	01.5344	16.77
440196	00.9325	14.68	450097	01.4142	17.99	450203	01.2206	15.81	450362	01.0842	11.91	450563	01.2662	21.61
440197	01.3633	19.48	450098	01.2530	13.96	450209	01.5823	16.60	450366	01.6450	18.85	450565	01.2729	14.73
440200	01.2078	16.84	450099	01.3057	16.51	450210	01.1195	12.40	450369	01.1417	10.97	450570	01.0647	12.15
440203	00.9625	11.16	450101	01.4027	14.92	450211	01.3941	14.50	450370	01.2098	11.99	450571	01.4119	14.67
440205	01.3058	14.19	450102	01.6383	17.29	450213	01.5350	15.73	450371	01.1849	10.92	450573	00.9647	13.22
440206	01.0758	13.22	450104	01.2371	13.07	450214	01.3728	17.29	450372	01.3298	22.86	450574	00.9848	13.75
450002	01.4667	15.71	450107	01.5465	18.16	450217	01.1361	11.65	450373	01.2224	13.96	450575	00.9488	14.24
450004	01.1257	12.11	450108	01.0249	12.16	450219	01.1018	13.15	450374	00.9093	11.71	450578	01.0265	14.27
450005	01.0888	14.37	450109	01.0396	16.18	450221	00.9856	13.35	450376	01.4709	14.76	450580	01.1164	12.70
450007	01.3221	13.04	450110	01.2323	14.61	450222	01.7037	17.58	450378	01.0642	18.25	450583	00.9815	12.02
450008	01.4126	14.15	450111	01.1519	18.57	450224	01.3976	15.77	450379	01.5559	20.78	450584	01.2201	12.25
450010	01.3565	14.36	450112	01.3394	12.60	450229	01.5405	14.70	450381	00.9512	11.86	450586	01.0199	11.96
450011	01.5245	16.73	450113	01.2322	14.59	450231	01.5328	17.35	450388	01.7301	17.08	450587	01.2823	15.54
450014	01.1027	13.51	450118	01.5352	15.96	450234	01.0330	11.57	450389	01.2111	17.39	450591	01.1060	14.98
450015	01.6277	14.58	450119	01.2993	15.78	450235	00.9894	12.40	450393	01.2512	21.55	450596	01.2939	16.49
450016	01.5830	18.64	450121	01.5729	18.89	450236	01.0758	13.45	450395	01.0160	14.21	450597	01.0637	15.32
450018	01.4655	19.82	450123	01.1646	16.60	450237	01.5959	15.96	450399	01.0247	12.52	450603	00.8282	11.74
450020	01.0451	14.94	450124	01.4879	18.15	450239	01.2542	12.21	450400	01.1098	09.69	450604	01.3717	12.85
450021	01.8448	19.58	450126	01.3564	16.49	450241	00.9458	13.71	450403	01.3374	19.91	450605	01.2914	18.17
450023	01.4027	15.21	450128	01.2524	13.45	450243	00.8269	11.52	450410	00.9614	.	450609	00.9090	11.00
450024	01.3953	14.47	450130	01.4844	15.56	450246	01.0125	10.82	450411	00.9619	11.26	450610	01.4902	16.66
450025	01.4727	15.12	450131	01.3218	17.06	450249	01.0332	10.84	450417	01.0120	13.74	450614	01.0733	12.13
450028	01.5388	17.21	450132	01.5936	15.46	450250	01.0150	12.12	450418	01.3848	16.29	450615	00.9272	11.97
450029	01.4026	11.50	450133	01.5957	17.50	450253	01.2020	12.54	450419	01.2555	20.88	450617	01.3347	18.17
450031	01.6426	18.78	450135	01.7230	19.83	450258	01.0849	10.80	450422	00.8158	23.68	450620	01.0327	13.85
450032	01.2885	13.14	450137	01.4468	21.51	450259	01.2161	17.92	450423	01.4084	22.35	450623	01.2302	17.54

450033	01.5967	16.13
450034	01.5653	16.34
450035	01.4856	18.70
450037	01.5438	16.93
450039	01.3562	17.86
450040	01.5913	16.80
450042	01.6197	15.24
450043	01.4150	16.44
450044	01.5709	19.16
450046	01.3161	16.83
450047	01.1267	14.89
450050	00.9811	13.70
450051	01.5088	18.04
450052	01.0243	13.39
450053	01.0692	15.65
450140	01.0164	12.94
450142	01.4611	19.12
450143	01.1241	11.76
450144	01.1070	15.44
450145	00.8838	12.69
450146	00.9974	14.56
450147	01.3685	17.10
450148	01.2858	18.70
450149	01.4000	18.97
450150	00.9215	12.55
450151	01.1840	12.12
450152	01.3006	14.41
450153	01.5425	17.33
450154	01.1242	10.93
450155	01.0094	10.09
450264	00.8571	09.77
450269	01.0761	13.32
450270	01.1079	10.66
450271	01.1990	14.76
450272	01.2241	15.51
450276	01.1097	11.27
450278	00.8682	11.11
450280	01.3423	19.11
450283	01.0163	.
450286	01.0537	13.54
450288	01.2346	13.72
450289	01.4732	16.97
450292	01.2637	17.64
450293	01.0223	12.90
450296	01.3636	16.97
450424	01.2114	16.01
450429	01.0797	12.22
450431	01.5587	15.81
450438	01.1423	13.61
450446	00.8105	13.57
450447	01.3465	17.04
450450	01.1298	13.64
450451	01.0803	16.31
450457	01.7452	16.53
450460	01.0009	11.81
450462	01.8368	18.04
450464	00.9988	13.17
450465	01.1817	11.39
450467	00.9682	13.76
450469	01.3504	15.87
450626	01.0205	13.74
450628	00.8886	11.43
450630	01.5830	22.91
450631	01.7436	18.06
450632	00.9909	10.90
450633	01.5675	17.65
450634	01.5774	20.13
450637	01.3727	17.24
450638	01.5876	21.91
450639	01.4374	23.61
450641	00.9511	11.53
450643	01.2895	16.80
450644	01.6066	21.23
450646	01.5877	18.64
450647	01.9856	22.35

TABLE 3C : HOSPITAL CASE MIX INDEXES FOR DISCHARGES OCCURRING IN FEDERAL FISCAL YEAR 1994 PAGE 15 OF 16
: HOSPITAL AVERAGE HOURLY WAGE FOR FEDERAL FISCAL YEAR 1996 WAGE INDEX

PROVIDER	CASE MIX INDEX	AVG HOUR WAGE
450648	01.1142	12.96
450649	01.0958	12.57
450651	01.7285	22.45
450652	00.9630	12.52
450653	01.1771	16.49
450654	00.9438	11.33
450656	01.3726	15.58
450658	00.9981	10.98
450659	01.4904	18.54
450660	01.5996	20.17
450661	01.3098	18.06
450662	01.5991	16.63
450665	01.0046	11.26
450666	01.2385	17.31
450668	01.5526	18.60
450669	01.2501	19.18
450670	01.2754	16.62
450672	01.6373	19.56
450673	01.0754	11.01
450674	00.8977	21.14
450675	01.4188	18.87
450677	01.4640	16.65
450678	01.6011	20.58
450681	01.6774	16.31
450683	01.2997	18.99
450684	01.2712	19.08
450686	01.4676	14.11
450688	01.3866	18.04
450690	01.4551	20.68
450691	01.1320	17.17
450694	01.3446	18.17
450696	01.4377	25.42
450697	01.4448	16.21
450698	00.9548	11.08
450700	00.9537	11.67
450702	01.5780	18.31
450703	01.5262	19.25
450704	01.2720	17.67
450705	01.0264	17.17
450706	01.2045	20.86
450709	01.1913	20.28
450711	01.6121	17.54
450712	00.8056	13.61
450713	01.4606	18.26
450715	01.4736	18.76
450716	01.2207	19.00
450717	01.2838	21.01
450718	01.2216	18.08
450723	01.3054	18.47
450724	01.2248	15.86
450725	01.1567	17.82
450726	00.8701	13.38
450727	00.9137	11.28

PROVIDER	CASE MIX INDEX	AVG HOUR WAGE
450755	01.2099	13.35
450757	00.9844	12.42
450758	01.9205	20.89
450760	01.1764	18.92
450761	01.0244	09.89
450763	01.0199	15.67
450766	02.0859	19.39
450769	00.9672	12.82
450770	01.0467	12.69
450771	02.0619	18.83
450774	00.7538	21.30
450775	01.1998	17.45
450776	00.9444	10.12
450777	01.0057	13.73
450778	01.0640	.
450779	01.3109	21.26
450780	00.9836	22.14
450781	01.3376	17.80
450785	00.9009	.
450787	01.8433	.
450788	01.3717	.
450789	01.5440	.
450790	01.4027	.
450791	01.4342	.
450792	02.0352	.
450793	01.7116	.
450794	01.5005	.
450795	00.8021	.
450797	00.4723	.
450798	00.6737	.
450799	01.7205	.
450897	04.9426	.
460001	01.7301	18.86
460003	01.5902	18.29
460004	01.7189	18.96
460005	01.5945	17.62
460006	01.3884	17.46
460007	01.3090	17.46
460008	01.4028	17.62
460009	01.6049	18.12
460010	02.0199	18.83
460011	01.4033	15.54
460013	01.4875	17.85
460014	01.0971	13.89
460015	01.2749	18.52
460016	00.9528	11.00
460017	01.4421	17.16
460018	00.9594	12.68
460019	01.0413	12.47
460020	01.0268	13.72
460021	01.3641	18.21
460022	01.0018	18.55
460023	01.1535	18.29

PROVIDER	CASE MIX INDEX	AVG HOUR WAGE
460044	01.1635	17.90
460046	00.8198	12.57
460047	01.7942	18.94
460049	01.9429	15.66
460050	01.2335	.
460051	01.0494	.
470001	01.1928	17.49
470003	01.9206	17.39
470004	01.0758	14.19
470005	01.2118	18.33
470006	01.2031	18.12
470008	01.2840	16.29
470010	01.1507	17.20
470011	01.1946	18.92
470012	01.2696	15.64
470013	01.1400	18.59
470015	01.1484	16.60
470018	01.1611	19.67
470020	00.9595	13.25
470023	01.2133	16.94
470024	01.1178	17.30
490001	01.0915	18.15
490002	01.1125	13.98
490003	00.6436	17.00
490004	01.1985	16.29
490005	01.5054	15.81
490006	01.1528	11.33
490007	02.0036	16.84
490009	01.7134	17.43
490010	01.1082	16.48
490011	01.3379	16.63
490012	01.1711	15.28
490013	01.1937	14.26
490014	01.4354	20.38
490015	01.4867	15.02
490017	01.3048	16.09
490018	01.2059	16.36
490019	01.2494	14.91
490020	01.1709	14.05
490021	01.3442	16.28
490022	01.2754	16.93
490023	01.2016	16.32
490024	01.6887	16.18
490027	01.1704	12.79
490028	01.3418	18.68
490030	01.2367	11.35
490031	01.1759	12.64
490032	01.7127	17.10
490033	01.1802	14.44
490035	01.0391	13.73
490037	01.1700	12.86
490038	01.1901	12.51
490040	01.3942	20.53

PROVIDER	CASE MIX INDEX	AVG HOUR WAGE
490063	01.6351	21.78
490066	01.2538	17.26
490067	01.2505	14.23
490069	01.4350	13.09
490071	01.4568	17.65
490073	01.3881	21.85
490074	01.2588	16.61
490075	01.2947	16.00
490077	01.2161	17.00
490079	01.2762	14.03
490083	00.7072	13.47
490084	01.2900	16.33
490085	01.1531	12.91
490088	01.1875	14.26
490089	01.1022	13.04
490090	01.2192	13.95
490091	01.2388	21.12
490092	01.1626	14.20
490093	01.2795	14.26
490094	01.1707	14.92
490095	01.3268	15.53
490097	01.1512	13.16
490098	01.3205	11.28
490099	00.9261	14.45
490100	01.3497	15.30
490101	01.1215	22.38
490104	00.9007	13.15
490105	00.7070	14.49
490106	00.8613	14.71
490107	01.2135	21.41
490108	00.8690	13.70
490109	00.9674	15.20
490110	01.2970	17.10
490111	01.2270	15.12
490112	01.6720	18.77
490113	01.3415	19.93
490114	01.1137	14.33
490115	01.2264	14.08
490116	01.2479	15.71
490117	01.1095	12.95
490118	01.6994	20.83
490119	01.2870	16.80
490120	01.3472	15.75
490122	01.2870	20.53
490123	01.1436	14.54
490124	01.1659	15.26
490126	01.2855	14.21
490127	01.0525	14.36
490130	01.2885	15.51
490131	00.9931	14.07
500001	01.3049	20.75
500002	01.4334	17.37
500003	01.3111	19.31

PROVIDER	CASE MIX INDEX	AVG HOUR WAGE
500027	01.5380	20.35
500028	01.1284	14.22
500029	00.9689	12.95
500030	01.3678	24.00
500031	01.2643	19.54
500033	01.2443	17.29
500036	01.2785	18.39
500037	01.1900	17.16
500039	01.3364	19.49
500041	01.2749	21.21
500042	01.3108	20.40
500043	01.1304	16.16
500044	01.8706	19.89
500045	01.1215	18.22
500048	00.9108	15.45
500049	01.4867	16.56
500050	01.4023	19.25
500051	01.5408	21.26
500052	01.2714	.
500053	01.2473	18.75
500054	01.8217	19.36
500055	01.0385	19.51
500057	01.3242	15.53
500058	01.4382	18.93
500059	01.1159	19.10
500060	01.4636	20.13
500061	01.0210	18.41
500062	01.1719	16.66
500064	01.4625	20.82
500065	01.3181	16.86
500068	00.9816	17.47
500069	01.1264	17.48
500071	01.2481	18.61
500072	01.2220	20.50
500073	01.0571	15.12
500074	01.0901	13.95
500075	01.2828	19.27
500077	01.3496	20.78
500079	01.3562	19.24
500080	00.8386	11.39
500084	01.2235	20.02
500085	01.0254	16.17
500086	01.3675	17.97
500088	01.3221	22.26
500089	01.0005	13.34
500090	00.7866	11.74
500092	01.0568	15.00
500094	00.9029	14.32
500096	00.9751	17.15
500097	01.2166	15.19
500098	00.9351	13.14
500101	00.9725	15.87
500102	00.9822	17.18

450728	00.9435	11.43	460024	01.0300	13.10	490041	01.2579	17.07	500005	01.7671	21.79	500104	01.2637	19.06
450730	01.3410	20.38	460025	00.7912	08.72	490042	01.3558	14.57	500007	01.3543	19.61	500106	00.9062	14.69
450732	01.3484	18.21	460026	01.0400	18.73	490043	01.2564	18.82	500008	01.8408	22.18	500107	01.1129	14.46
450733	01.3858	18.33	460027	00.9649	17.34	490044	01.3071	16.12	500009	01.3058	20.51	500108	01.6562	21.71
450734	01.3020	16.26	460029	01.1330	17.92	490045	01.1759	18.21	500011	01.3493	22.04	500110	01.2374	17.96
450735	00.9503	11.77	460030	01.2005	15.88	490046	01.4569	16.95	500012	01.5177	19.95	500118	01.1817	19.87
450742	01.2801	19.64	460032	00.9586	14.10	490047	01.0544	17.13	500014	01.8079	22.08	500119	01.3353	19.61
450743	01.3734	20.69	460033	00.9631	21.04	490048	01.4615	16.87	500015	01.3081	19.91	500122	01.2726	18.49
450745	00.7844	.	460035	00.8910	12.40	490050	01.3828	20.10	500016	01.3734	21.55	500123	01.0218	15.07
450746	01.0222	12.27	460036	00.9189	18.92	490052	01.5687	14.59	500019	01.2732	19.53	500124	01.3300	21.28
450747	01.4080	14.03	460037	01.0284	13.35	490053	01.2526	13.56	500021	01.5232	19.18	500125	01.0628	10.72
450749	01.0407	12.03	460039	00.9759	19.47	490054	01.0967	13.83	500023	01.2097	19.80	500127	00.7012	14.81
450750	01.0229	11.13	460041	01.2195	18.67	490057	01.4877	16.33	500024	01.6049	21.17	500129	01.6426	20.99
450751	01.3204	21.85	460042	01.4770	15.69	490059	01.5938	16.48	500025	01.8674	22.05	500132	00.9821	18.61
450754	00.9021	11.72	460043	01.3741	19.52	490060	01.0573	17.44	500026	01.4028	21.54	500134	00.8241	15.79

TABLE 3C : HOSPITAL CASE MIX INDEXES FOR DISCHARGES OCCURRING IN FEDERAL FISCAL YEAR 1994 PAGE 16 OF 16
: HOSPITAL AVERAGE HOURLY WAGE FOR FEDERAL FISCAL YEAR 1996 WAGE INDEX

PROVIDER	CASE MIX INDEX	AVG HOUR WAGE
500137	00.6451	17.85
500138	06.7161	.
500139	01.4523	21.47
500140	00.9789	13.96
500141	01.3357	20.95
500143	00.8369	14.99
500145	01.3495	.
500898	01.1447	.
510001	01.7062	16.64
510002	01.2609	17.53
510004	00.9418	11.47
510005	00.9054	12.40
510006	01.2418	17.07
510007	01.4222	16.92
510008	01.1011	14.78
510009	01.0075	12.02
510012	01.0481	14.30
510013	01.1922	14.68
510015	00.9499	13.86
510016	01.0204	11.19
510018	01.0859	12.75
510020	01.0870	09.36
510022	01.6985	18.80
510023	01.1025	15.21
510024	01.3549	16.56
510025	00.9569	10.06
510026	00.9267	11.40
510027	00.9835	13.01
510028	01.0609	18.75
510029	01.2907	15.75
510030	01.0605	14.71
510031	01.3074	15.41
510033	01.2395	13.81
510035	01.1566	17.54
510036	00.9331	11.78
510038	01.0455	13.86
510039	01.3538	14.77
510043	00.9748	10.23
510046	01.2074	15.20
510047	01.1464	16.50
510048	01.1001	16.65
510050	01.3081	14.18
510053	00.9808	13.43
510055	01.2651	18.38
510058	01.2272	15.23
510059	01.0529	13.61
510060	01.1121	13.44
510061	01.0234	13.23
510062	01.2041	15.84
510063	01.0520	13.39
510065	00.9969	18.80
510066	01.1024	11.29
510067	01.2247	16.60
520007	01.0708	13.40
520008	01.5036	20.21
520009	01.6709	16.69
520010	01.1345	18.74
520011	01.1802	15.82
520013	01.3452	17.39
520014	01.1754	14.92
520015	01.1940	16.10
520016	01.0320	12.10
520017	01.2185	16.17
520018	00.9714	15.12
520019	01.3208	15.81
520021	01.3289	17.87
520024	01.0292	12.06
520025	01.0788	14.84
520026	01.0600	16.62
520027	01.1484	18.20
520028	01.3475	16.60
520029	00.9455	15.32
520030	01.6734	18.99
520031	01.1716	16.00
520032	01.1513	14.19
520033	01.1839	15.92
520034	01.1919	16.24
520035	01.2437	14.95
520037	01.5847	17.92
520038	01.3736	16.35
520039	01.0054	15.55
520040	01.4625	19.00
520041	01.1993	14.44
520042	01.0491	15.99
520044	01.3545	15.83
520045	01.6512	16.87
520047	01.0328	14.12
520048	01.4311	16.96
520049	01.8166	17.11
520051	01.9224	18.64
520053	01.0469	14.95
520054	01.0492	15.66
520056	01.2885	17.61
520057	01.1550	15.81
520058	01.0294	17.40
520059	01.2808	17.27
520060	01.3394	14.70
520062	01.2441	15.60
520063	01.1933	16.74
520064	01.6911	17.56
520066	01.3689	17.75
520068	00.9069	14.65
520069	01.2176	15.89
520070	01.4630	16.29
520071	01.1126	16.28
520074	01.0971	14.80
520096	01.5442	16.65
520097	01.3453	16.82
520098	01.8189	19.03
520100	01.2383	15.22
520101	01.1154	15.24
520102	01.2247	18.37
520103	01.3087	16.55
520107	01.2733	15.90
520109	01.0088	16.79
520110	01.1093	16.26
520111	01.0740	13.12
520112	01.1239	17.91
520113	01.1921	17.45
520114	01.0981	12.56
520115	01.2916	15.40
520116	01.2587	16.86
520117	01.0571	14.29
520118	00.9485	09.62
520120	00.9820	11.97
520121	00.9344	13.81
520122	01.0110	13.21
520123	01.0555	15.20
520124	01.1527	14.50
520130	01.0899	12.36
520131	01.0240	15.72
520132	01.1829	13.60
520134	01.0940	14.40
520135	01.0039	12.70
520136	01.5218	18.05
520138	01.8488	17.66
520139	01.2030	17.83
520140	01.5529	18.24
520141	01.1515	15.56
520142	00.8177	11.71
520144	01.0184	15.72
520145	00.9590	16.59
520146	01.0826	12.88
520148	01.1479	14.99
520149	00.9606	12.29
520151	01.0805	13.81
520152	01.1487	15.57
520153	00.9143	12.42
520154	01.1217	15.66
520156	01.0948	17.35
520157	01.0076	13.06
520159	00.8910	15.84
520160	01.7720	16.98
520161	01.0518	14.34
520170	01.3118	17.27
520171	00.9709	13.38
520173	01.1994	17.49
520174	01.4562	19.90
520177	01.5277	19.26
530016	01.1188	11.30
530017	01.0512	15.09
530018	01.0216	13.70
530019	00.9959	12.98
530022	01.0588	15.34
530023	00.8275	16.19
530025	01.3393	17.07
530026	01.0599	13.67
530027	00.8666	08.89
530029	00.8694	13.80
530031	00.8847	10.48
530032	01.1474	16.45

510068	01.1336	14.26	520075	01.4735	16.74	520178	01.0616	13.83
510070	01.1941	15.70	520076	01.0967	14.67	520186	02.0515	.
510071	01.2598	14.58	520077	01.0475	13.87	530002	01.1020	16.35
510072	01.0958	12.86	520078	01.4881	16.04	530003	00.8805	12.54
510077	01.1419	13.20	520082	01.4060	15.87	530004	01.0252	12.81
510080	01.1731	10.11	520083	01.6390	20.44	530005	01.0062	11.90
510081	00.9783	12.88	520084	01.1027	14.50	530006	01.1409	16.90
510082	01.1298	11.32	520087	01.6062	16.54	530007	01.0746	11.30
510084	00.9907	12.23	520088	01.2835	16.79	530008	01.2071	16.29
510085	01.2452	17.51	520089	01.5248	18.22	530009	01.0226	15.00
510086	01.0849	14.08	520090	01.2304	15.59	530010	01.2345	16.00
520002	01.2744	16.70	520091	01.2712	16.49	530011	01.0507	15.86
520003	01.1019	14.95	520092	01.1001	15.89	530012	01.5268	15.96
520004	01.1986	15.96	520094	01.0719	15.88	530014	01.2901	14.52
520006	01.0298	17.00	520095	01.3501	17.75	530015	01.1403	16.33

NOTE: CASE MIX INDEXES DO NOT INCLUDE DISCHARGES FROM PPS-EXEMPT UNITS.
: CASE MIX INDEXES INCLUDE CASES RECEIVED IN HCFA CENTRAL OFFICE THROUGH DECEMBER 1994

BILLING CODE 4120-01-C

TABLE 4a.—WAGE INDEX AND CAPITAL GEOGRAPHIC ADJUSTMENT FACTOR (GAF) FOR URBAN AREAS

Urban area (Constituent counties or county equivalents)	Wage index	GAF
0040 Abilene, TX	0.8347	0.8836
Taylor, TX		
0060 Aguadilla, PR	0.4753	0.6009
Aguada, PR		
Aguadilla, PR		
Moca, PR		
0080 Akron, OH	0.9596	0.9722
Portage, OH		
Summit, OH		
0120 Albany, GA	0.8624	0.9036
Dougherty, GA		
Lee, GA		
0160 Albany-Schenectady-Troy, NY	0.8796	0.9159
Albany, NY		
Montgomery, NY		
Rensselaer, NY		
Saratoga, NY		
Schenectady, NY		
Schoharie, NY		
0200 Albuquerque, NM	0.9561	0.9697
Bernalillo, NM		
Sandoval, NM		
Valencia, NM		
0220 Alexandria, LA	0.8025	0.8601
Rapides, LA		
0240 Allentown-Bethlehem-Easton, PA	1.0218	1.0149
Carbon, PA		
Lehigh, PA		
Northampton, PA		
0280 Altoona, PA	0.9024	0.9321
Blair, PA		
0320 Amarillo, TX	0.8711	0.9098
Potter, TX		
Randall, TX		
0380 Anchorage, AK	1.3398	1.2218
Anchorage, AK		
0440 Ann Arbor, MI	1.2138	1.1419
Lenawee, MI		
Livingston, MI		
Washtenaw, MI		
0450 Anniston, AL	0.8139	0.8685
Calhoun, AL		
0460 Appleton-Oshkosh-Neenah, WI	0.8861	0.9205
Calumet, WI		
Outagamie, WI		
Winnebago, WI		
0470 Arecibo, PR	0.4273	0.5586
Arecibo, PR		
Camuy, PR		
Hatillo, PR		
0480 Asheville, NC	0.9235	0.9470
Buncombe, NC		
Madison, NC		
0500 Athens, GA	0.9082	0.9362
Clarke, GA		
Madison, GA		
Oconee, GA		
0520 *Atlanta, GA	1.0130	1.0089
Barrow, GA		
Bartow, GA		
Carroll, GA		
Cherokee, GA		
Clayton, GA		
Cobb, GA		

TABLE 4a.—WAGE INDEX AND CAPITAL GEOGRAPHIC ADJUSTMENT FACTOR (GAF) FOR URBAN AREAS—Continued

Urban area (Constituent counties or county equivalents)	Wage index	GAF
Coweta, GA		
De Kalb, GA		
Douglas, GA		
Fayette, GA		
Forsyth, GA		
Fulton, GA		
Gwinnett, GA		
Henry, GA		
Newton, GA		
Paulding, GA		
Pickens, GA		
Rockdale, GA		
Spalding, GA		
Walton, GA		
0560 Atlantic City-Cape May, NJ	1.0852	1.0576
Atlantic City, NJ		
Cape May, NJ		
0600 Augusta-Aiken, GA-SC	0.8975	0.9286
Columbia, GA		
McDuffie, GA		
Richmond, GA		
Aiken, SC		
Edgefield, SC		
0640 Austin-San Marcos, TX	0.9049	0.9339
Bastrop, TX		
Caldwell, TX		
Hays, TX		
Travis, TX		
Williamson, TX		
0680 Bakersfield, CA	1.0521	1.0354
Kern, CA		
0720 *Baltimore, MD	0.9885	0.9921
Anne Arundel, MD		
Baltimore, MD		
Baltimore City, MD		
Carroll, MD		
Harford, MD		
Howard, MD		
Queen Annes, MD		
0733 Bangor, ME	0.9377	0.9569
Penobscot, ME		
0743 Barnstable-Yarmouth, MA	1.3482	1.2270
Barnstable, MA		
0760 Baton Rouge, LA	0.8695	0.9087
Ascension, LA		
East Baton Rouge, LA		
Livingston, LA		
West Baton Rouge, LA		
0840 Beaumont-Port Arthur, TX	0.8384	0.8863
Hardin, TX		
Jefferson, TX		
Orange, TX		
0860 Bellingham, WA	1.2705	1.1782
Whatcom, WA		
0870 Benton Harbor, MI	0.8320	0.8817
Berrien, MI		
0875 *Bergen-Passaic, NJ	1.1475	1.0988
Bergen, NJ		

TABLE 4a.—WAGE INDEX AND CAPITAL GEOGRAPHIC ADJUSTMENT FACTOR (GAF) FOR URBAN AREAS—Continued

Urban area (Constituent counties or county equivalents)	Wage index	GAF
Passaic, NJ		
0880 Billings, MT	0.8721	0.9105
Yellowstone, MT		
0920 Biloxi-Gulfport-Pascagoula, MS	0.8464	0.8921
Hancock, MS		
Harrison, MS		
Jackson, MS		
0960 Binghamton, NY	0.9012	0.9312
Broome, NY		
Tioga, NY		
1000 Birmingham, AL	0.8999	0.9303
Blount, AL		
Jefferson, AL		
St. Clair, AL		
Shelby, AL		
1010 Bismarck, ND	0.8314	0.8812
Burleigh, ND		
Morton, ND		
1020 Bloomington, IN	0.8445	0.8907
Monroe, IN		
1040 Bloomington-Normal, IL	0.8756	0.9130
McLean, IL		
1080 Boise City, ID	0.9091	0.9368
Ada, ID		
Canyon, ID		
1123 *Boston-Brockton-Nashua, MA-NH	1.1691	1.1129
Bristol, MA		
Essex, MA		
Middlesex, MA		
Norfolk, MA		
Plymouth, MA		
Suffolk, MA		
Worcester, MA		
Hillsborough, NH		
Merrimack, NH		
Rockingham, NH		
Strafford, NH		
1125 Boulder-Longmont, CO	0.8223	0.8746
Boulder, CO		
1145 Brazoria, TX	0.8313	0.8812
Brazoria, TX		
1150 Bremerton, WA	1.0314	1.0214
Kitsap, WA		
1240 Brownsville-Harlingen-San Benito, TX	0.8666	0.9066
Cameron, TX		
1260 Bryan-College Station, TX	0.9004	0.9307
Brazos, TX		
1280 *Buffalo-Niagara Falls, NY	0.9215	0.9456
Erie, NY		
Niagara, NY		
1303 Burlington, VT	0.9270	0.9494
Chittenden, VT		
Franklin, VT		
Grand Isle, VT		
1310 Caguas, PR	0.4716	0.5977
Caguas, PR		
Cayey, PR		
Cidra, PR		
Gurabo, PR		
San Lorenzo, PR		

TABLE 4a.—WAGE INDEX AND CAPITAL GEOGRAPHIC ADJUSTMENT FACTOR (GAF) FOR URBAN AREAS—Continued

Urban area (Constituent counties or county equivalents)	Wage index	GAF
1320 Canton-Massillon, OH	0.8826	0.9180
Carroll, OH		
Stark, OH		
1350 Casper, WY	0.8466	0.8922
Natrona, WY		
1360 Cedar Rapids, IA	0.8375	0.8856
Linn, IA		
1400 Champaign-Urbana, IL	0.8883	0.9221
Champaign, IL		
1440 Charleston-North Charleston, SC	0.8947	0.9266
Berkeley, SC		
Charleston, SC		
Dorchester, SC		
1480 Charleston, WV	0.9454	0.9623
Kanawha, WV		
Putnam, WV		
1520 *Charlotte-Gastonia-Rock Hill, NC-SC	0.9664	0.9769
Cabarrus, NC		
Gaston, NC		
Lincoln, NC		
Mecklenburg, NC		
Rowan, NC		
Union, NC		
York, SC		
1540 Charlottesville, VA	0.9196	0.9442
Albemarle, VA		
Charlottesville City, VA		
Fluvanna, VA		
Greene, VA		
1560 Chattanooga, TN-GA	0.9140	0.9403
Catoosa, GA		
Dade, GA		
Walker, GA		
Hamilton, TN		
Marion, TN		
1580 Cheyenne, WY	0.7950	0.8546
Laramie, WY		
1600 *Chicago, IL	1.0653	1.0443
Cook, IL		
De Kalb, IL		
Du Page, IL		
Grundy, IL		
Kane, IL		
Kendall, IL		
Lake, IL		
McHenry, IL		
Will, IL		
1620 Chico-Paradise, CA	1.0538	1.0365
Butte, CA		
1640 *Cincinnati, OH-KY-IN	0.9474	0.9637
Dearborn, IN		
Ohio, IN		
Boone, KY		
Campbell, KY		
Gallatin, KY		
Grant, KY		
Kenton, KY		
Pendleton, KY		
Brown, OH		
Clermont, OH		
Hamilton, OH		
Warren, OH		
1660 Clarksville-Hopkinsville, TN-KY	0.7556	0.8254
Christian, KY		
Montgomery, TN		
1680 *Cleveland-Lorain-Elyria, OH	0.9847	0.9895
Ashtabula, OH		
Cuyahoga, OH		
Geauga, OH		
Lake, OH		
Lorain, OH		
Medina, OH		
1720 Colorado Springs, CO	0.9311	0.9523
El Paso, CO		
1740 Columbia, MO	0.9479	0.9640
Boone, MO		
1760 Columbia, SC	0.9050	0.9339
Lexington, SC		
Richland, SC		
1800 Columbus, GA-AL	0.7758	0.8404
Russell, AL		
Chattanoochee, GA		
Harris, GA		
Muscogee, GA		
1840 *Columbus, OH	0.9747	0.9826
Delaware, OH		
Fairfield, OH		
Franklin, OH		
Licking, OH		
Madison, OH		
Pickaway, OH		
1880 Corpus Christi, TX	0.8957	0.9273
Nueces, TX		
San Patricio, TX		
1900 Cumberland, MD-WV	0.8388	0.8866
Allegany, MD		
Mineral, WV		
1920 *Dallas, TX	0.9810	0.9869
Collin, TX		
Dallas, TX		
Denton, TX		
Ellis, TX		
Henderson, TX		
Hunt, TX		
Kaufman, TX		
Rockwall, TX		
1950 Danville, VA	0.8470	0.8925
Danville City, VA		
Pittsylvania, VA		
1960 Davenport-Rock Island-Moline, IA-IL	0.8372	0.8854
Scott, IA		
Henry, IL		
Rock Island, IL		
2000 Dayton-Springfield, OH	0.9160	0.9417
Clark, OH		
Greene, OH		
Miami, OH		
Montgomery, OH		
2020 Daytona Beach, FL	0.9013	0.9313
Flagler, FL		
Volusia, FL		
2030 Decatur, AL	0.8189	0.8721
Lawrence, AL		
Morgan, AL		
2040 Decatur, IL	0.7805	0.8439
Macon, IL		
2080 *Denver, CO	1.0414	1.0282
Adams, CO		
Arapahoe, CO		
Denver, CO		
Douglas, CO		
Jefferson, CO		
2120 Des Moines, IA	0.8794	0.9158
Dallas, IA		
Polk, IA		
Warren, IA		
2160 *Detroit, MI	1.0850	1.0575
Lapeer, MI		
Macomb, MI		
Monroe, MI		
Oakland, MI		
St. Clair, MI		
Wayne, MI		
2180 Dothan, AL	0.7700	0.8361
Dale, AL		
Houston, AL		
2190 Dover, DE	0.8977	0.9288
Kent, DE		
2200 Dubuque, IA	0.8051	0.8620
Dubuque, IA		
2240 Duluth-Superior, MN-WI	0.9678	0.9778
St. Louis, MN		
Douglas, WI		
2281 Dutchess County, NY	1.0654	1.0443
Dutchess, NY		
2290 Eau Claire, WI	0.8676	0.9073
Chippewa, WI		
Eau Claire, WI		
2320 El Paso, TX	0.8844	0.9193
El Paso, TX		
2330 Elkhart-Goshen, IN	0.8822	0.9177
Elkhart, IN		
2335 Elmira, NY	0.8476	0.8929
Chemung, NY		
2340 Enid, OK	0.8186	0.8719
Garfield, OK		
2360 Erie, PA	0.9213	0.9454
Erie, PA		
2400 Eugene-Springfield, OR	1.1206	1.0811
Lane, OR		
2440 Evansville-Henderson, IN-KY	0.8916	0.9244
Posey, IN		
Vanderburgh, IN		
Warrick, IN		
Henderson, KY		
2520 Fargo-Moorhead, ND-MN	0.8929	0.9254
Clay, MN		

TABLE 4a.—WAGE INDEX AND CAPITAL GEOGRAPHIC ADJUSTMENT FACTOR (GAF) FOR URBAN AREAS—Continued

Urban area (Constituent counties or county equivalents)	Wage index	GAF
Cass, ND		
2560 Fayetteville, NC	0.8860	0.9205
Cumberland, NC		
2580 Fayetteville-Springdale-Rogers, AR	0.7100	0.7909
Benton, AR		
Washington, AR		
2640 Flint, MI	1.0667	1.0452
Genesee, MI		
2650 Florence, AL	0.7985	0.8572
Colbert, AL		
Lauderdale, AL		
2655 Florence, SC	0.8553	0.8985
Florence, SC		
2670 Fort Collins-Loveland, CO	1.0612	1.0415
Larimer, CO		
2680 *Ft Lauderdale, FL	1.0959	1.0647
Broward, FL		
2700 Fort Myers-Cape Coral, FL	0.9684	0.9783
Lee, FL		
2710 Fort Pierce-Port St Lucie, FL	1.0320	1.0218
Martin, FL		
St Lucie, FL		
2720 Fort Smith, AR-OK	0.7624	0.8305
Crawford, AR		
Sebastian, AR		
Sequoyah, OK		
2750 Fort Walton Beach, FL	0.8757	0.9131
Okaloosa, FL		
2760 Fort Wayne, IN	0.8708	0.9096
Adams, IN		
Allen, IN		
De Kalb, IN		
Huntington, IN		
Wells, IN		
Whitley, IN		
2800 *Fort Worth-Arlington, TX	0.9947	0.9964
Hood, TX		
Johnson, TX		
Parker, TX		
Tarrant, TX		
2840 Fresno, CA	1.0550	1.0373
Fresno, CA		
Madera, CA		
2880 Gadsden, AL	0.8584	0.9007
Etowah, AL		
2900 Gainesville, FL	0.9024	0.9321
Alachua, FL		
2920 Galveston-Texas City, TX	1.0269	1.0183
Galveston, TX		
	.....	
2960 Gary, IN	0.9470	0.9634
Lake, IN		
Porter, IN		
2975 Glens Falls, NY	0.9294	0.9511
Warren, NY		
Washington, NY		
2980 Goldsboro, NC	0.8180	0.8715

TABLE 4a.—WAGE INDEX AND CAPITAL GEOGRAPHIC ADJUSTMENT FACTOR (GAF) FOR URBAN AREAS—Continued

Urban area (Constituent counties or county equivalents)	Wage index	GAF
Wayne, NC		
2985 Grand Forks, ND-MN	0.9000	0.9304
Polk, MN		
Grand Forks, ND		
3000 Grand Rapids-Muskegon-Holland, MI	1.0067	1.0046
Allegan, MI		
Kent, MI		
Muskegon, MI		
Ottawa, MI		
3040 Great Falls, MT	0.9139	0.9402
Cascade, MT		
3060 Greeley, CO	0.9164	0.9420
Weld, CO		
3080 Green Bay, WI	0.9288	0.9507
Brown, WI		
3120 *Greensboro-Winston-Salem-High Point, NC	0.9123	0.9391
Alamance, NC		
Davidson, NC		
Davie, NC		
Forsyth, NC		
Guilford, NC		
Randolph, NC		
Stokes, NC		
Yadkin, NC		
3150 Greenville, NC	0.9119	0.9388
Pitt, NC		
3160 Greenville-Spartanburg-Anderson, SC	0.8981	0.9290
Anderson, SC		
Cherokee, SC		
Greenville, SC		
Pickens, SC		
Spartanburg, SC		
3180 Hagerstown, MD	0.9091	0.9368
Washington, MD		
3200 Hamilton-Middletown, OH	0.8264	0.8776
Butler, OH		
3240 Harrisburg-Lebanon-Carlisle, PA	0.9991	0.9994
Cumberland, PA		
Dauphin, PA		
Lebanon, PA		
Perry, PA		
3283 *Hartford, CT	1.2412	1.1595
Hartford, CT		
Litchfield, CT		
Middlesex, CT		
Tolland, CT		
3285 Hattiesburg, MS	0.7253	0.8026
Forrest, MS		
Lamar, MS		
3290 Hickory-Morganton, NC	0.8002	0.8584
Alexander, NC		
Burke, NC		
Caldwell, NC		
Catawba, NC		
3320 Honolulu, HI	1.1233	1.0829
Honolulu, HI		
3350 Houma, LA	0.7613	0.8296

TABLE 4a.—WAGE INDEX AND CAPITAL GEOGRAPHIC ADJUSTMENT FACTOR (GAF) FOR URBAN AREAS—Continued

Urban area (Constituent counties or county equivalents)	Wage index	GAF
Lafourche, LA		
Terrebonne, LA		
3360 *Houston, TX	0.9836	0.9887
Chambers, TX		
Fort Bend, TX		
Harris, TX		
Liberty, TX		
Montgomery, TX		
Waller, TX		
3400 Huntington-Ashland, WV-KY-OH	0.9014	0.9314
Boyd, KY		
Carter, KY		
Greenup, KY		
Lawrence, OH		
Cabell, WV		
Wayne, WV		
3440 Huntsville, AL	0.8146	0.8690
Limestone, AL		
Madison, AL		
3480 *Indianapolis, IN	0.9774	0.9845
Boone, IN		
Hamilton, IN		
Hancock, IN		
Hendricks, IN		
Johnson, IN		
Madison, IN		
Marion, IN		
Morgan, IN		
Shelby, IN		
3500 Iowa City, IA	0.9387	0.9576
Johnson, IA		
3520 Jackson, MI	0.9139	0.9402
Jackson, MI		
3560 Jackson, MS	0.7652	0.8325
Hinds, MS		
Madison, MS		
Rankin, MS		
3580 Jackson, TN	0.8527	0.8966
Madison, TN		
3600 Jacksonville, FL	0.8927	0.9252
Clay, FL		
Duval, FL		
Nassau, FL		
St Johns, FL		
3605 Jacksonville, NC	0.6939	0.7786
Onslow, NC		
3610 Jamestown, NY	0.7550	0.8249
Chautaqua, NY		
3620 Janesville-Beloit, WI	0.8802	0.9163
Rock, WI		
3640 Jersey City, NJ	1.1041	1.0702
Hudson, NJ		
3660 Johnson City-Kingsport-Bristol, TN-VA	0.8785	0.9151
Carter, TN		
Hawkins, TN		
Sullivan, TN		
Unicoi, TN		
Washington, TN		
Bristol City, VA		
Scott, VA		
Washington, VA		
3680 Johnstown, PA	0.8534	0.8971
Cambria, PA		

TABLE 4a.—WAGE INDEX AND CAPITAL GEOGRAPHIC ADJUSTMENT FACTOR (GAF) FOR URBAN AREAS—Continued

Urban area (Constituent counties or county equivalents)	Wage index	GAF
Somerset, PA		
3710 Joplin, MO	0.7938	0.8537
Jasper, MO		
Newton, MO		
3720 Kalamazoo-Battlecreek, MI	1.0776	1.0525
Calhoun, MI		
Kalamazoo, MI		
Van Buren, MI		
3740 Kankakee, IL	0.7524	0.8230
Kankakee, IL		
3760 *Kansas City, KS-MO	0.9373	0.9566
Johnson, KS		
Leavenworth, KS		
Miami, KS		
Wyandotte, KS		
Cass, MO		
Clay, MO		
Clinton, MO		
Jackson, MO		
Lafayette, MO		
Platte, MO		
Ray, MO		
3800 Kenosha, WI	0.8888	0.9224
Kenosha, WI		
3810 Killeen-Temple, TX	1.0546	1.0371
Bell, TX		
Coryell, TX		
3840 Knoxville, TN	0.8534	0.8971
Anderson, TN		
Blount, TN		
Knox, TN		
Loudon, TN		
Sevier, TN		
Union, TN		
3850 Kokomo, IN	0.8851	0.9198
Howard, IN		
Tipton, IN		
3870 La Crosse, WI-MN	0.8603	0.9021
Houston, MN		
La Crosse, WI		
3880 Lafayette, LA	0.8515	0.8958
Acadia, LA		
Lafayette, LA		
St Landry, LA		
St Martin, LA		
3920 Lafayette, IN	0.8343	0.8833
Clinton, IN		
Tippecanoe, IN		
3960 Lake Charles, LA	0.8109	0.8663
Calcasieu, LA		
3980 Lakeland-Winter Haven, FL	0.8684	0.9079
Polk, FL		
4000 Lancaster, PA	0.9587	0.9715
Lancaster, PA		
4040 Lansing-East Lansing, MI	1.0124	1.0085
Clinton, MI		
Eaton, MI		
Ingham, MI		
4080 Laredo, TX	0.6604	0.7527
Webb, TX		
4100 Las Cruces, NM	0.8878	0.9217
Dona Ana, NM		
4120 *Las Vegas, NV-AZ	1.0964	1.0651
Mohave, AZ		
Clark, NV		
Nye, NV		
4150 Lawrence, KS	0.8565	0.8994
Douglas, KS		
4200 Lawton, OK	0.8611	0.9027
Comanche, OK		
4243 Lewiston-Auburn, ME	0.9451	0.9621
Androscoggin, ME		
4280 Lexington, KY	0.8352	0.8840
Bourbon, KY		
Clark, KY		
Fayette, KY		
Jessamine, KY		
Madison, KY		
Scott, KY		
Woodford, KY		
4320 Lima, OH	0.8575	0.9001
Allen, OH		
Auglaize, OH		
4360 Lincoln, NE	0.9097	0.9372
Lancaster, NE		
4400 Little Rock-North Little Rock, AR	0.8543	0.8978
Faulkner, AR		
Lonoke, AR		
Pulaski, AR		
Saline, AR		
4420 Longview-Marshall, TX	0.8669	0.9068
Gregg, TX		
Harrison, TX		
Upshur, TX		
4480 *Los Angeles-Long Beach, CA	1.2521	1.1664
Los Angeles, CA		
4520 Louisville, KY-IN	0.9345	0.9547
Clark, IN		
Floyd, IN		
Harrison, IN		
Scott, IN		
Bullitt, KY		
Jefferson, KY		
Oldham, KY		
4600 Lubbock, TX	0.8459	0.8917
Lubbock, TX		
4640 Lynchburg, VA	0.8065	0.8631
Amherst, VA		
Bedford City, VA		
Bedford, VA		
Campbell, VA		
Lynchburg City, VA		
4680 Macon, GA	0.9008	0.9310
Bibb, GA		
Houston, GA		
Jones, GA		
Peach, GA		
Twiggs, GA		
4720 Madison, WI	1.0074	1.0051
Dane, WI		
4800 Mansfield, OH	0.8389	0.8867
Crawford, OH		
Richland, OH		
4840 Mayaguez, PR	0.4654	0.5923
Anasco, PR		
Cabo Rojo, PR		
Hormigueros, PR		
Mayaguez, PR		
Sabana Grande, PR		
San German, PR		
4880 McAllen-Edinburg-Mission, TX	0.8685	0.9080
Hidalgo, TX		
4890 Medford-Ashland, OR	1.0181	1.0124
Jackson, OR		
4900 Melbourne-Titusville-Palm Bay, FL	0.9408	0.9591
Brevard, Fl		
4920 *Memphis, TN-AR-MS	0.8411	0.8883
Crittenden, AR		
De Soto, MS		
Fayette, TN		
Shelby, TN		
Tipton, TN		
4940 Merced, CA	1.0898	1.0607
Merced, CA		
5000 *Miami, FL	0.9530	0.9676
Dade, FL		
5015 *Middlesex-Somerset-Hunterdon, NJ	1.0549	1.0373
Hunterdon, NJ		
Middlesex, NJ		
Somerset, NJ		
5080 *Milwaukee-Waukesha, WI	0.9516	0.9666
Milwaukee, WI		
Ozaukee, WI		
Washington, WI		
Waukesha, WI		
5120 *Minneapolis-St. Paul, MN-WI	1.0726	1.0492
Anoka, MN		
Carver, MN		
Chisago, MN		
Dakota, MN		
Hennepin, MN		
Isanti, MN		
Ramsey, MN		
Scott, MN		
Sherburne, MN		
Washington, MN		
Wright, MN		
Pierce, WI		
St. Croix, WI		
5160 Mobile, AL	0.7720	0.8376
Baldwin, AL		
Mobile, AL		
5170 Modesto, CA	1.0575	1.0390
Stanislaus, CA		
5190 *Monmouth-Ocean, NJ	1.0515	1.0350
Monmouth, NJ		
Ocean, NJ		
5200 Monroe, LA	0.7963	0.8556
Ouachita, LA		
5240 Montgomery, AL	0.7914	0.8520
Autauga, AL		

TABLE 4a.—WAGE INDEX AND CAPITAL GEOGRAPHIC ADJUSTMENT FACTOR (GAF) FOR URBAN AREAS—Continued

Urban area (Constituent counties or county equivalents)	Wage index	GAF
Elmore, AL		
Montgomery, AL		
5280 Muncie, IN	0.8843	0.9192
Delaware, IN		
5330 Myrtle Beach, SC	0.7976	0.8565
Horry, SC		
5345 Naples, FL	0.9890	0.9925
Collier, FL		
5360 *Nashville, TN	0.9273	0.9496
Cheatham, TN		
Davidson, TN		
Dickson, TN		
Robertson, TN		
Rutherford TN		
Sumner, TN		
Williamson, TN		
Wilson, TN		
5380 *Nassau-Suffolk, NY	1.2680	1.1766
Nassau, NY		
Suffolk, NY		
5483 *New Haven-Bridgeport-Stamford-Danbury-Waterbury, CT	1.2585	1.1705
Fairfield, CT		
New Haven, CT		
5523 New London-Norwich, CT	1.2111	1.1401
New London, CT		
5560 *New Orleans, LA	0.9419	0.9598
Jefferson, LA		
Orleans, LA		
Plaquemines, LA		
St. Bernard, LA		
St. Charles, LA		
St. James, LA		
St. John The Baptist, LA		
St. Tammany, LA		
5600 *New York, NY	1.3845	1.2496
Bronx, NY		
Kings, NY		
New York, NY		
Putnam, NY		
Queens, NY		
Richmond, NY		
Rockland, NY		
Westchester, NY		
5640 *Newark, NJ	1.1185	1.0797
Essex, NJ		
Morris, NJ		
Sussex, NJ		
Union, NJ		
Warren, NJ		
5660 Newburgh, NY-PA	1.0529	1.0359
Orange, NY		
Pike, PA		
5720 *Norfolk-Virginia Beach-Newport News, VA-NC	0.8448	0.8909
Currituck, NC		
Chesapeake City, VA		
Gloucester, VA		
Hampton City, VA		
Isle of Wight, VA		
James City, VA		
Mathews, VA		
Newport News City, VA		
Norfolk City, VA		
Poquoson City, VA		
Portsmouth City, VA		
Suffolk City, VA		
Virginia Beach City VA		
Williamsburg City, VA		
York, VA		
5775 *Oakland, CA	1.5219	1.3332
Alameda, CA		
Contra Costa, CA		
5790 Ocala, FL	0.8960	0.9276
Marion, FL		
5800 Odessa-Midland, TX	0.8769	0.9140
Ector, TX		
Midland, TX		
5880 *Oklahoma City, OK	0.8343	0.8833
Canadian, OK		
Cleveland, OK		
Logan, OK		
McClain, OK		
Oklahoma, OK		
Pottawatomie, OK		
5910 Olympia, WA	1.1130	1.0761
Thurston, WA		
5920 Omaha, NE-IA	0.9812	0.9871
Pottawattamie, IA		
Cass, NE		
Douglas, NE		
Sarpy, NE		
Washington, NE		
5945 *Orange County, CA	1.4733	1.3039
Orange, CA		
5960 *Orlando, FL	0.9356	0.9554
Lake, FL		
Orange, FL		
Osceola, FL		
Seminole, FL		
5990 Owensboro, KY	0.7512	0.8221
Davies, KY		
6015 Panama City, FL	0.8147	0.8691
Bay, FL		
6020 Parkersburg-Marietta, WV-OH	0.7766	0.8410
Washington, OH		
Wood, WV		
6080 Pensacola, FL	0.8228	0.8750
Escambia, FL		
Santa Rosa, FL		
6120 Peoria-Pekin, IL	0.8635	0.9044
Peoria, IL		
Tazewell, IL		
Woodford, IL		
6160 *Philadelphia, PA-NJ	1.1103	1.0743
Burlington, NJ		
Camden, NJ		
Gloucester, NJ		
Salem, NJ		
Bucks, PA		
Chester, PA		
Delaware, PA		
Montgomery, PA		
Philadelphia, PA		
6200 *Phoenix-Mesa, AZ	0.9799	0.9862
Maricopa, AZ		
Pinal, AZ		
6240 Pine Bluff, AR	0.7842	0.8466
Jefferson, AR		
6280 *Pittsburgh, PA	0.9761	0.9836
Allegheny, PA		
Beaver, PA		
Butler, PA		
Fayette, PA		
Washington, PA		
Westmoreland, PA		
6323 Pittsfield, MA	1.0859	1.0581
Berkshire, MA		
6360 Ponce, PR	0.4756	0.6011
Guayanilla, PR		
Juana Diaz, PR		
Penuelas, PR		
Ponce, PR		
Villalba, PR		
Yauco, PR		
6403 Portland, ME	0.9763	0.9837
Cumberland, ME		
Sagadahoc, ME		
York, ME		
6440 *Portland-Vancouver, OR-WA	1.1272	1.0855
Clackamas, OR		
Columbia, OR		
Multnomah, OR		
Washington, OR		
Yamhill, OR		
Clark, WA		
6483 *Providence-Warwick, RI	1.1048	1.0706
Bristol, RI		
Kent, RI		
Newport, RI		
Providence, RI		
Washington, RI		
6520 Provo-Orem, UT	0.9886	0.9922
Utah, UT		
6560 Pueblo, CO	0.8524	0.8964
Pueblo, CO		
6580 Punta Gorda, FL	0.8764	0.9136
Charlotte, FL		
6600 Racine, WI	0.8424	0.8892
Racine, WI		
6640 Raleigh-Durham-Chapel Hill, NC	0.9558	0.9695
Chatham, NC		
Durham, NC		
Franklin, NC		
Johnston, NC		
Orange, NC		
Wake, NC		
6660 Rapid City, SD	0.8283	0.8790
Pennington, SD		
6680 Reading, PA	0.9588	0.9716
Berks, PA		

TABLE 4a.—WAGE INDEX AND CAPITAL GEOGRAPHIC ADJUSTMENT FACTOR (GAF) FOR URBAN AREAS—Continued

Urban area (Constituent counties or county equivalents)	Wage index	GAF
6690 Redding, CA	1.1725	1.1151
Shasta, CA		
6720 Reno, NV	1.1108	1.0746
Washoe, NV		
6740 Richland-Kennewick-Pasco, WA	1.0028	1.0019
Benton, WA		
Franklin, WA		
6760 Richmond-Petersburg, VA	0.8852	0.9199
Charles City County, VA		
Chesterfield, VA		
Colonial Heights City, VA		
Dinwiddie, VA		
Goochland, VA		
Hanover, VA		
Henrico, VA		
Hopewell City, VA		
New Kent, VA		
Petersburg City, VA		
Powhatan, VA		
Prince George, VA		
Richmond City, VA		
6780 *Riverside-San Bernardino, CA	1.1588	1.1062
Riverside, CA		
San Bernardino, CA		
6800 Roanoke, VA	0.8586	0.9009
Botetourt, VA		
Roanoke, VA		
Roanoke City, VA		
Salem City, VA		
6820 Rochester, MN	1.0565	1.0384
Olmsted, MN		
6840 *Rochester, NY	0.9602	0.9726
Genesee, NY		
Livingston, NY		
Monroe, NY		
Ontario, NY		
Orleans, NY		
Wayne, NY		
6880 Rockford, IL	0.8889	0.9225
Boone, IL		
Ogle, IL		
Winnebago, IL		
6895 Rocky Mount, NC	0.8852	0.9199
Edgecombe, NC		
Nash, NC		
6920 *Sacramento, CA	1.2581	1.1703
El Dorado, CA		
Placer, CA		
Sacramento, CA		
6960 Saginaw-Bay City-Midland, MI	0.9507	0.9660
Bay, MI		
Midland, MI		
Saginaw, MI		
6980 St Cloud, MN	0.9567	0.9701
Benton, MN		
Stearns, MN		
7000 St Joseph, MO	0.8473	0.8927
Andrews, MO		
Buchanan, MO		

TABLE 4a.—WAGE INDEX AND CAPITAL GEOGRAPHIC ADJUSTMENT FACTOR (GAF) FOR URBAN AREAS—Continued

Urban area (Constituent counties or county equivalents)	Wage index	GAF
7040 *St Louis, MO-IL	0.8889	0.9225
Clinton, IL		
Jersey, IL		
Madison, IL		
Monroe, IL		
St Clair, IL		
Franklin, MO		
Jefferson, MO		
Lincoln, MO		
St Charles, MO		
St Louis, MO		
St Louis City, MO		
Warren, MO		
7080 Salem, OR	0.9593	0.9719
Marion, OR		
Polk, OR		
7120 Salinas, CA	1.4290	1.2769
Monterey, CA		
7160 *Salt Lake City-Ogden, UT	0.9643	0.9754
Davis, UT		
Salt Lake, UT		
Weber, UT		
7200 San Angelo, TX	0.7792	0.8429
Tom Green, TX		
7240 *San Antonio, TX	0.8404	0.8877
Bexar, TX		
Comal, TX		
Guadalupe, TX		
Wilson, TX		
7320 *San Diego, CA	1.1917	1.1276
San Diego, CA		
7360 *San Francisco, CA	1.4332	1.2795
Marin, CA		
San Francisco, CA		
San Mateo, CA		
7400 *San Jose, CA	1.4352	1.2807
Santa Clara, CA		
7440 *San Juan-Bayamon, PR	0.4481	0.5771
Aguas Buenas, PR		
Barceloneta, PR		
Bayamon, PR		
Canovanas, PR		
Carolina, PR		
Catano, PR		
Ceiba, PR		
Comerio, PR		
Corozal, PR		
Dorado, PR		
Fajardo, PR		
Florida, PR		
Guaynabo, PR		
Humacao, PR		
Juncos, PR		
Los Piedras, PR		
Loiza, PR		
Luguillo, PR		
Manati, PR		
Naranjito, PR		
Rio Grande, PR		
San Juan, PR		
Toa Alta, PR		
Toa Baja, PR		
Trujillo Alto, PR		
Vega Alta, PR		

TABLE 4a.—WAGE INDEX AND CAPITAL GEOGRAPHIC ADJUSTMENT FACTOR (GAF) FOR URBAN AREAS—Continued

Urban area (Constituent counties or county equivalents)	Wage index	GAF
Vega Baja, PR		
Yabucoa, PR		
7460 San Luis Obispo-Atascadero-Paso Robles, CA	1.1427	1.0957
San Luis Obispo, CA		
7480 Santa Barbara-Santa Maria-Lompoc, CA	1.1114	1.0750
Santa Barbara, CA		
7485 Santa Cruz-Watsonville, CA	1.0175	1.0120
Santa Cruz, CA		
7490 Santa Fe, NM	1.1129	1.0760
Los Alamos, NM		
Santa Fe, NM		
7500 Santa Rosa, CA	1.2758	1.1815
Sonoma, CA		
7510 Sarasota-Bradenton, FL	0.9871	0.9911
Manatee, FL		
Sarasota, FL		
7520 Savannah, GA	0.8888	0.9224
Bryan, GA		
Chatham, GA		
Effingham, GA		
7560 Scranton–Wilkes-Barre–Hazleton, PA	0.8740	0.9119
Columbia, PA		
Lackawanna, PA		
Luzerne, PA		
Wyoming, PA		
7600 *Seattle-Bellevue-Everett, WA	1.1229	1.0826
Island, WA		
King, WA		
Snohomish, WA		
7610 Sharon, PA	0.9110	0.9382
Mercer, PA		
7620 Sheboygan, WI	0.7996	0.8580
Sheboygan, WI		
7640 Sherman-Denison, TX	0.8795	0.9158
Grayson, TX		
7680 Shreveport-Bossier City, LA	0.9023	0.9320
Bossier, LA		
Caddo, LA		
Webster, LA		
7720 Sioux City, IA-NE	0.8398	0.8873
Woodbury, IA		
Dakota, NE		
7760 Sioux Falls, SD	0.8778	0.9146
Lincoln, SD		
Minnehaha, SD		
7800 South Bend, IN	0.9429	0.9605
St Joseph, IN		
7840 Spokane, WA	1.0401	1.0273
Spokane, WA		
7880 Springfield, IL	0.8957	0.9273
Menard, IL		
Sangamon, IL		
7920 Springfield, MO	0.7911	0.8517
Christian, MO		
Greene, MO		

TABLE 4a.—WAGE INDEX AND CAPITAL GEOGRAPHIC ADJUSTMENT FACTOR (GAF) FOR URBAN AREAS—Continued

Urban area (Constituent counties or county equivalents)	Wage index	GAF
Webster, MO		
8003 Springfield, MA ..	1.0488	1.0332
Hampden, MA		
Hampshire, MA		
8050 State College, PA	1.0181	1.0124
Centre, PA		
8080 Steubenville-Weirton, OH-WV	0.8471	0.8926
Jefferson, OH		
Brooke, WV		
Hancock, WV		
8120 Stockton-Lodi, CA	1.1687	1.1127
San Joaquin, CA		
8140 Sumter, SC	0.8360	0.8846
Sumter, SC		
8160 Syracuse, NY	0.9548	0.9688
Cayuga, NY		
Madison, NY		
Onondaga, NY		
Oswego, NY		
8200 Tacoma, WA	1.0822	1.0556
Pierce, WA		
8240 Tallahassee, FL .	0.8337	0.8829
Gadsden, FL		
Leon, FL		
8280 *Tampa-St Petersburg-Clearwater, FL ..	0.9319	0.9528
Hernando, FL		
Hillsborough, FL		
Pasco, FL		
Pinellas, FL		
8320 Terre Haute, IN .	0.8688	0.9082
Clay, IN		
Vermillion, IN		
Vigo, IN		
8360 Texarkana, AR-Texarkana, TX	0.8272	0.8782
Miller, AR		
Bowie, TX		
8400 Toledo, OH	1.0349	1.0238
Fulton, OH		
Lucas, OH		
Wood, OH		
8440 Topeka, KS	0.9607	0.9729
Shawnee, KS		
8480 Trenton, NJ	1.0176	1.0120
Mercer, NJ		
8520 Tucson, AZ	0.9292	0.9510
Pima, AZ		
8560 Tulsa, OK	0.8274	0.8783
Creek, OK		
Osage, OK		
Rogers, OK		
Tulsa, OK		
Wagoner, OK		
8600 Tuscaloosa, AL .	0.7937	0.8537
Tuscaloosa, AL		
8640 Tyler, TX	0.9448	0.9619
Smith, TX		
8680 Utica-Rome, NY	0.8530	0.8968
Herkimer, NY		
Oneida, NY		
8720 Vallejo-Fairfield-Napa, CA	1.3341	1.2182
Napa, CA		
Solano, CA		
8735 Ventura, CA	1.2760	1.1816
Ventura, CA		
8750 Victoria, TX	0.8451	0.8911
Victoria, TX		
8760 Vineland-Millville-Bridgeton, NJ	0.9985	0.9990
Cumberland, NJ		
8780 Visalia-Tulare-Porterville, CA	1.0525	1.0357
Tulare, CA		
8800 Waco, TX	0.7913	0.8519
McLennan, TX		
8840 *Washington, DC-MD-VA-WV	1.1088	1.0733
District of Columbia, DC		
Calvert, MD		
Charles, MD		
Frederick, MD		
Montgomery, MD		
Prince Georges, MD		
Alexandria City, VA		
Arlington, VA		
Clarke, VA		
Culpepper, VA		
Fairfax, VA		
Fairfax City, VA		
Falls Church City, VA		
Fauquier, VA		
Fredericksburg City, VA		
King George, VA		
Loudoun, VA		
Manassas City, VA		
Manassas Park City, VA		
Prince William, VA		
Spotsylvania, VA		
Stafford, VA		
Warren, VA		
Berkeley, WV		
Jefferson, WV		
8920 Waterloo-Cedar Falls, IA	0.8655	0.9058
Black Hawk, IA		
8940 Wausau, WI	1.0053	1.0036
Marathon, WI		
8960 West Palm Beach-Boca Raton, FL	1.0175	1.0120
Palm Beach, FL		
9000 Wheeling, OH-WV	0.7554	0.8252
Belmont, OH		
Marshall, WV		
Ohio, WV		
9040 Wichita, KS	0.9580	0.9710
Butler, KS		
Harvey, KS		
Sedgwick, KS		
9080 Wichita Falls, TX	0.7772	0.8415
Archer, TX		
Wichita, TX		
9140 Williamsport, PA	0.8524	0.8964
Lycoming, PA		
9160 Wilmington-Newark, DE-MD	0.9598	0.9723
New Castle, DE		
Cecil, MD		
9200 Wilmington, NC .	0.9317	0.9527
New Hanover, NC		
Brunswick, NC		
9260 Yakima, WA	0.9894	0.9927
Yakima, WA		
9270 Yolo, CA	1.1640	1.1096
Yolo, CA		
9280 York, PA	0.9182	0.9432
York, PA		
9320 Youngstown-Warren, OH	0.9600	0.9724
Columbiana, OH		
Mahoning, OH		
Trumbull, OH		
9340 Yuba City, CA ...	1.0631	1.0428
Sutter, CA		
Yuba, CA		
9360 Yuma, AZ	0.9787	0.9854
Yuma, AZ		

TABLE 4b.—WAGE INDEX AND CAPITAL GEOGRAPHIC ADJUSTMENT FACTOR (GAF) FOR RURAL AREAS

Nonurban area	Wage index	GAF
Alabama	0.7172	0.7964
Alaska	1.2064	1.1371
Arizona	0.8156	0.8697
Arkansas	0.6915	0.7768
California	1.0175	1.0120
Colorado	0.8223	0.8746
Connecticut	1.3142	1.2058
Delaware	0.8986	0.9294
Florida	0.8684	0.9079
Georgia	0.7670	0.8339
Hawaii	0.9866	0.9908
Idaho	0.8424	0.8892
Illinois	0.7524	0.8230
Indiana	0.8047	0.8617
Iowa	0.7353	0.8101
Kansas	0.7249	0.8023
Kentucky	0.7678	0.8345
Louisiana	0.7284	0.8049
Maine	0.8441	0.8904
Maryland	0.8479	0.8932
Massachusetts	1.0597	1.0405
Michigan	0.8776	0.9145
Minnesota	0.8143	0.8688
Mississippi	0.6710	0.7609
Missouri	0.7217	0.7998
Montana	0.8088	0.8647
Nebraska	0.7226	0.8005
Nevada	0.8805	0.9165
New Hampshire	1.0032	1.0022
New Jersey [1]	.....	.....
New Mexico	0.8347	0.8836
New York	0.8624	0.9036
North Carolina	0.8002	0.8584
North Dakota	0.7305	0.8065

TABLE 4b.—WAGE INDEX AND CAPITAL GEOGRAPHIC ADJUSTMENT FACTOR (GAF) FOR RURAL AREAS—Continued

Nonurban area	Wage index	GAF
Ohio	0.8264	0.8776
Oklahoma	0.7005	0.7837
Oregon	0.9509	0.9661
Pennsylvania	0.8534	0.8971
Puerto Rico	0.3888	0.5237
Rhode Island [1]	.....	.....
South Carolina	0.7746	0.8395
South Dakota	0.6952	0.7796
Tennessee	0.7433	0.8162
Texas	0.7269	0.8038
Utah	0.8698	0.9089
Vermont	0.9132	0.9397
Virginia	0.7813	0.8445
Washington	0.9791	0.9856
West Virginia	0.8073	0.8636
Wisconsin	0.8424	0.8892
Wyoming	0.7933	0.8534

[1] All counties within the State are classified urban.

TABLE 4c.—WAGE INDEX AND CAPITAL GEOGRAPHIC ADJUSTMENT FACTOR (GAF) FOR HOSPITALS THAT ARE RECLASSIFIED

Area reclassified to	Wage index	GAF
Abilene, TX	0.8347	0.8836
Albuquerque, NM	0.9561	0.9697
Alexandria, LA	0.8025	0.8601
Allentown-Bethlehem-Easton, PA	1.0218	1.0149
Amarillo, TX	0.8711	0.9098
Anchorage, AK	1.3398	1.2218
Ann Arbor, MI	1.2014	1.1339
Asheville, NC	0.9235	0.9470
Atlanta, GA	1.0130	1.0089
Augusta-Aiken, GA-SC	0.8975	0.9286
Baton Rouge, LA	0.8695	0.9087
Benton Harbor, MI	0.8320	0.8817
Benton Harbor, MI (Rural Michigan Hosp.)	0.8776	0.9145
Bergen-Passaic, NJ	1.1361	1.0913
Biloxi-Gulfport-Pascagoula, MS	0.8464	0.8921
Birmingham, AL	0.8999	0.9303
Bismarck, ND	0.8188	0.8721
Boise City, ID	0.9091	0.9368
Boston-Brockton-Nashua, MA-NH	1.1691	1.1129
Brazoria, TX	0.7556	0.8254
Casper, WY	0.8466	0.8922
Champaign-Urbana, IL	0.8680	0.9076
Charleston-North Charleston, SC	0.8947	0.9266
Charleston, WV	0.9276	0.9498
Charlotte-Gastonia-Rock Hill, NC-SC	0.9664	0.9769
Charlottesville, VA	0.9041	0.9333
Chattanooga, TN-GA	0.8966	0.9280
Chicago, IL	1.0534	1.0363
Cincinnati, OH-KY-IN	0.9474	0.9637
Cleveland-Lorain-Elyria, OH	0.9847	0.9895

TABLE 4c.—WAGE INDEX AND CAPITAL GEOGRAPHIC ADJUSTMENT FACTOR (GAF) FOR HOSPITALS THAT ARE RECLASSIFIED—Continued

Area reclassified to	Wage index	GAF
Columbia, MO	0.9167	0.9422
Columbus, GA-AL	0.7758	0.8404
Columbus, OH	0.9747	0.9826
Dallas, TX	0.9810	0.9869
Davenport-Rock Island-Moline, IA-IL	0.8372	0.8854
Dayton-Springfield, OH	0.9160	0.9417
Denver, CO	1.0414	1.0282
Des Moines, IA	0.8688	0.9082
Detroit, MI	1.0850	1.0575
Duluth-Superior, MN-WI	0.9678	0.9778
Dutchess County, NY	1.0468	1.0318
Eau Claire, WI	0.8676	0.9073
Elkhart-Goshen, IN	0.8822	0.9177
Eugene-Springfield, OR	1.1206	1.0811
Fargo-Moorhead, ND-MN	0.8781	0.9148
Fayetteville, NC	0.8518	0.8960
Flint, MI	1.0667	1.0452
Florence, AL	0.7985	0.8572
Florence, SC	0.8553	0.8985
Fort Lauderdale, FL	1.0959	1.0647
Fort Pierce-Port St Lucie, FL	1.0021	1.0014
Fort Smith, AR-OK	0.7624	0.8305
Fort Walton Beach, FL	0.8656	0.9059
Fort Worth-Arlington, TX	0.9947	0.9964
Gadsden, AL	0.8584	0.9007
Grand Forks, ND-MN	0.9000	0.9304
Great Falls, MT	0.9139	0.9402
Greeley, CO	0.9010	0.9311
Green Bay, WI	0.9288	0.9507
Greenville-Spartanburg-Anderson, SC	0.8848	0.9196
Harrisburg-Lebanon-Carlisle, PA	0.9991	0.9994
Hartford, CT	1.2218	1.1470
Honolulu, HI	1.1233	1.0829
Houston, TX	0.9836	0.9887
Huntington-Ashland, WV-KY-OH	0.9014	0.9314
Huntsville, AL	0.7975	0.8565
Indianapolis, IN	0.9659	0.9765
Jackson, MS	0.7652	0.8325
Jacksonville, FL	0.8927	0.9252
Johnson City-Kingsport-Bristol, TN-VA	0.8785	0.9151
Joplin, MO	0.7938	0.8537
Kalamazoo-Battlecreek, MI	1.0557	1.0378
Kansas City, KS-MO	0.9373	0.9566
Knoxville, TN	0.8534	0.8971
Lafayette, LA	0.8515	0.8958
Lansing-East Lansing, MI	1.0124	1.0085
Las Vegas, NV-AZ	1.0964	1.0651
Lexington, KY	0.8352	0.8840
Lima, OH	0.8575	0.9001
Lincoln, NE	0.8892	0.9227
Little Rock-North Little Rock, AR	0.8543	0.8978
Longview-Marshall, TX	0.8495	0.8943
Los Angeles-Long Beach, CA	1.2521	1.1664
Louisville, KY-IN	0.9345	0.9547
Lubbock, TX	0.8459	0.8917

TABLE 4c.—WAGE INDEX AND CAPITAL GEOGRAPHIC ADJUSTMENT FACTOR (GAF) FOR HOSPITALS THAT ARE RECLASSIFIED—Continued

Area reclassified to	Wage index	GAF
Madison, WI	1.0074	1.0051
Mansfield, OH	0.8389	0.8867
Medford-Ashland, OR	1.0181	1.0124
Memphis, TN-AR-MS	0.8307	0.8807
Middlesex-Somerset-Hunterdon, NJ	1.0405	1.0276
Milwaukee-Waukesha, WI	0.9516	0.9666
Minneapolis-St Paul, MN-WI	1.0726	1.0492
Modesto, CA	1.0575	1.0390
Monroe, LA	0.7963	0.8556
Montgomery, AL	0.7914	0.8520
Nashville, TN	0.9273	0.9496
New London-Norwich, CT	1.2111	1.1401
New Orleans, LA	0.9419	0.9598
New York, NY	1.3845	1.2496
Newark, NJ	1.1185	1.0797
Newburgh, NY-PA	1.0529	1.0359
Oakland, CA	1.5219	1.3332
Odessa-Midland, TX	0.8769	0.9140
Oklahoma City, OK	0.8343	0.8833
Omaha, NE-IA	0.9812	0.9871
Orange County, CA	1.4733	1.3039
Peoria-Pekin, IL	0.8635	0.9044
Philadelphia, PA-NJ	1.1103	1.0743
Pittsburgh, PA	0.9661	0.9767
Portland, ME	0.9763	0.9837
Portland-Vancouver, OR-WA	1.1272	1.0855
Provo-Orem, UT	0.9714	0.9803
Raleigh-Durham-Chapel Hill, NC	0.9558	0.9695
Rapid City, SD	0.8283	0.8790
Richland-Kennewick-Pasco, WA	0.9854	0.9900
Roanoke, VA	0.8586	0.9009
Rochester, MN	1.0565	1.0384
Rockford, IL	0.8889	0.9225
Rocky Mount, NC	0.8852	0.9199
Sacramento, CA	1.2581	1.1703
Saginaw-Bay City-Midland, MI,	0.9507	0.9660
St Cloud, MN	0.9567	0.9701
St Louis, MO-IL	0.8889	0.9225
Salem, OR	0.9593	0.9719
Salinas, CA	1.4168	1.2695
Salt Lake City-Ogden, UT	0.9643	0.9754
San Diego, CA	1.1917	1.1276
San Francisco, CA	1.4332	1.2795
San Jose, CA	1.4352	1.2807
Santa Rosa, CA	1.2635	1.1737
Sarasota-Bradenton, FL	0.9871	0.9911
Savannah, GA	0.8888	0.9224
Seattle-Bellevue-Everett, WA	1.1229	1.0826
Sharon, PA	0.9110	0.9382
Sherman-Denison, TX	0.8604	0.9022
Sioux Falls, SD	0.8778	0.9146
South Bend, IN	0.9429	0.9605
Springfield, IL	0.8852	0.9199
Springfield, MO	0.7911	0.8517
Stockton, CA	1.1687	1.1127
Syracuse, NY	0.9548	0.9688
Tampa-St Petersburg-Clearwater, FL	0.9319	0.9528

TABLE 4c.—WAGE INDEX AND CAPITAL GEOGRAPHIC ADJUSTMENT FACTOR (GAF) FOR HOSPITALS THAT ARE RECLASSIFIED—Continued

Area reclassified to	Wage index	GAF
Texarkana, TX-Texarkana, AR	0.8272	0.8782
Topeka, KS	0.9302	0.9517
Trenton, NJ	1.2622	1.1729
Tucson, AZ	0.9292	0.9510
Tulsa, OK	0.8274	0.8783
Tyler, TX	0.9182	0.9432
Ventura, CA	1.2760	1.1816
Victoria, TX	0.8451	0.8911
Waco, TX	0.7741	0.8392
Washington, DC-MD-VA-WV	1.1088	1.0733
Waterloo-Cedar Falls, IA	0.8655	0.9058
Wausau, WI	0.9697	0.9792
Wichita, KS	0.9328	0.9535
Rural Arkansas	0.6915	0.7768
Rural Florida	0.8684	0.9079
Rural Kentucky	0.7678	0.8345
Rural Louisiana	0.7284	0.8049
Rural Michigan	0.8776	0.9145
Rural Minnesota	0.8143	0.8688
Rural Missouri	0.7217	0.7998
Rural New Hampshire	1.0032	1.0022
Rural North Carolina	0.8002	0.8584
Rural Virginia	0.7813	0.8445
Rural West Virginia	0.8073	0.8636
Rural Wyoming	0.7933	0.8534

TABLE 4d.—AVERAGE HOURLY WAGE FOR URBAN AREAS

Urban area	Average hourly wage
Abilene, TX	15.7713
Aguadilla, PR	8.9796
Akron, OH	18.0935
Albany, GA	16.2942
Albany-Schenectady-Troy, NY	16.6194
Albuquerque, NM	18.0635
Alexandria, LA	14.9860
Allentown-Bethlehem-Easton, PA-NJ	19.3050
Altoona, PA	17.0490
Amarillo, TX	16.4576
Anchorage, AK	25.3141
Ann Arbor, MI	22.9331
Anniston, AL	15.3769
Appleton-Oshkosh-Neenah, WI	16.7413
Arecibo, PR	8.0736
Asheville, NC	17.4487
Athens, GA	17.1598
Atlanta, GA	19.1400
Atlantic City-Cape May, NJ	20.5031
Augusta-Aiken, GA-SC	16.9581
Austin-San Marcos, TX	17.0978
Bakersfield, CA	19.8791
Baltimore, MD	18.6758
Bangor, ME	17.7164
Barnstable-Yarmouth, MA	25.4728
Baton Rouge, LA	16.4273
Beaumont-Port Arthur, TX	15.8400
Bellingham, WA	24.0042
Benton Harbor, MI	15.6323
Bergen-Passaic, NJ	22.0724

TABLE 4d.—AVERAGE HOURLY WAGE FOR URBAN AREAS—Continued

Urban area	Average hourly wage
Billings, MT	16.4779
Biloxi-Gulfport-Pascagoula, MS	15.9912
Binghamton, NY	17.0278
Birmingham, AL	17.0034
Bismarck, ND	15.7090
Bloomington, IN	15.9556
Bloomington-Normal, IL	16.5439
Boise City, ID	16.9658
Boston-Brockton-Nashua, MA-NH.	22.0851
Boulder-Longmont, CO	18.5131
Brazoria, TX	16.2335
Bremerton, WA	19.4876
Brownsville-Harlingen-San Benito, TX	16.3732
Bryan-College Station, TX	17.0117
Buffalo-Niagara Falls, NY	17.4103
Burlington, VT	17.5139
Caguas, PR	8.9106
Canton-Massillon, OH	16.6748
Casper, WY	15.9558
Cedar Rapids, IA	15.8233
Champaign-Urbana, IL	16.7843
Charleston-North Charleston, SC.	16.9003
Charleston, WV	17.8630
Charlotte-Gastonia-Rock Hill, NC-SC	18.2595
Charlottesville, VA	17.3750
Chattanooga, TN-GA	17.2687
Cheyenne, WY	15.0213
Chicago, IL	20.1273
Chico-Paradise, CA	19.9101
Cincinnati, OH-KY-IN	17.8346
Clarksville-Hopkinsville, TN-KY	14.2763
Cleveland-Lorain-Elyria, OH	18.6053
Colorado Springs, CO	17.5930
Columbia, MO	17.9090
Columbia, SC	17.0995
Columbus, GA-AL	14.6584
Columbus, OH	18.4158
Corpus Christi, TX	16.9241
Cumberland, MD-WV	15.8483
Dallas, TX	18.5344
Danville, VA	16.0030
Davenport-Moline-Rock Island, IA-IL	15.8183
Dayton-Springfield, OH	17.8047
Daytona Beach, FL	17.0281
Decatur, AL	15.4729
Decatur, IL	14.7466
Denver, CO	19.6754
Des Moines, IA	16.6145
Detroit, MI	20.4702
Dothan, AL	14.5485
Dover, DE	16.9613
Dubuque, IA	15.2109
Duluth-Superior, MN-WI	18.2853
Dutchess County, NY	20.1296
Eau Claire, WI	16.3926
El Paso, TX	16.7092
Elkhart-Goshen, IN	16.5895
Elmira, NY	16.0141
Enid, OK	15.4658
Erie, PA	17.4068
Eugene-Springfield, OR	21.0833
Evansville, Henderson, IN-KY	16.8454
Fargo-Moorhead, ND-MN	16.8702
Fayetteville, NC	16.7399
Fayetteville-Springdale-Rogers, AR	13.4138

TABLE 4d.—AVERAGE HOURLY WAGE FOR URBAN AREAS—Continued

Urban area	Average hourly wage
Flint, MI	20.1573
Florence, AL	14.5759
Florence, SC	16.1316
Fort Collins-Loveland, CO	20.0496
Fort Lauderdale, FL	19.8995
Fort Myers-Cape Coral, FL	18.2971
Fort Pierce-Fort St. Lucie, FL	19.4990
Fort Smith, AR-OK	14.3665
Fort Walton Beach, FL	16.5450
Fort Wayne, IN	16.4522
Fort Worth-Arlington, TX	18.7773
Fresno, CA	19.9329
Gadsden, AL	16.2189
Gainesville, FL	17.0500
Galveston-Texas City, TX	19.4029
Gary, IN	18.0636
Glens Falls, NY	17.5596
Goldsboro, NC	15.4556
Grand Forks, ND-MN	16.9349
Grand Rapids-Muskegon-Holland, MI	19.0210
Great Falls, MT	17.1426
Greeley, CO	17.3139
Green Bay, WI	16.8657
Greensboro-Winston-Salem-High Point, NC	17.2367
Greenville, NC	17.2294
Greenville-Spartanburg-Anderson, SC	16.9679
Hagerstown, MD	17.1762
Hamilton-Middletown, OH	16.6240
Harrisburg-Lebanon-Carlisle, PA	18.8766
Hartford, CT	23.4517
Hattiesburg, MS	13.7034
Hickory-Morganton, NC	16.4126
Honolulu, HI	21.2237
Houma, LA	14.3835
Houston, TX	18.5845
Huntington-Ashland, WV-KY-OH	17.0304
Huntsville, AL	15.3910
Indianapolis, IN	18.4664
Iowa City, IA	17.7359
Jackson, MI	17.2666
Jackson, MS	14.2689
Jackson, TN	16.1114
Jacksonville, FL	16.8656
Jacksonville, NC	13.1113
Jamestown, NY	14.2640
Janesville-Beloit, WI	16.6310
Jersey City, NJ	20.8846
Johnson City-Kingsport-Bristol, TN-VA	16.5552
Johnstown, PA	16.4137
Joplin, MO	14.9986
Kalamazoo-Battle Creek, MI	20.3592
Kankakee, IL	17.2516
Kansas City, KS-MO	17.7093
Kenosha, WI	16.7936
Killeen-Temple, TX	19.9249
Knoxville, TN	16.1236
Kokomo, IN	16.7227
LaCrosse, WI-MN	16.2552
Lafayette, LA	15.9838
Lafayette, IN	15.7641
Lake Charles, LA	15.3218
Lakeland-Winter Haven, FL	16.8079
Lancaster, PA	18.1140
Lansing-East Lansing, MI	19.1281
Laredo, TX	12.4773

TABLE 4d.—AVERAGE HOURLY WAGE FOR URBAN AREAS—Continued

Urban area	Average hourly wage
Las Cruces, NM	16.7732
Las Vegas, NV-AZ	20.7139
Lawrence, KS	16.1829
Lawton, OK	16.2688
Lewiston-Auburn, ME	17.8565
Lexington, KY	15.7793
Lima, OH	16.2023
Lincoln, NE	17.1871
Little Rock-North Little Rock, AR.	16.1414
Longview-Marshall, TX	16.5201
Los Angeles-Long Beach, CA	23.7140
Louisville, KY-IN	17.6561
Lubbock, TX	15.9821
Lynchburg, VA	15.2374
Macon, GA	17.0204
Madison, WI	19.0333
Mansfield, OH	15.8496
Mayaguez, PR	8.7937
McAllen-Edinburg-Mission, TX	16.4091
Medford-Ashland, OR	18.8231
Melbourne-Titusville-Palm Bay, FL.	17.7745
Memphis, TN-AR-MS	15.8921
Merced, CA	20.5898
Miami, FL	19.1521
Middlesex-Somerset-Hunterdon, NJ	20.2661
Milwaukee-Waukesha, WI	17.9785
Minneapolis-St. Paul, MN-WI	20.2652
Mobile, AL	14.7679
Modesto, CA	20.9677
Monmouth-Ocean, NJ	19.8663
Monroe, LA	14.9551
Montgomery, AL	14.9086
Muncie, IN	16.7085
Myrtle Beach, SC	15.0700
Naples, FL	18.6860
Nashville, TN	17.5194
Nassau-Suffolk, NY	25.3790
New Haven-Bridgeport-Stamford-Danbury-Waterbury, CT	23.7784
New London-Norwich, CT	22.5252
New Orleans, LA	17.7954
New York, NY	26.0720
Newark, NJ	22.4086
Newburgh, NY-PA	19.8924
Norfolk-Virginia Beach-Newport News, VA-NC	15.9621
Oakland, CA	28.7549
Ocala, FL	16.9285
Odessa-Midland, TX	16.5687
Oklahoma City, OK	15.7626
Olympia, WA	21.0283
Omaha, NE-IA	18.5393
Orange County, CA	23.3465
Orlando, FL	17.6766
Owensboro, KY	14.1939
Panama City, FL	15.3923
Parkersburg-Marietta, WV-OH	14.6723
Pensacola, FL	15.5451
Peoria-Pekin, IL	16.3153
Philadelphia, PA-NJ	21.0153
Phoenix-Mesa, AZ	18.5146
Pine Bluff, AR	14.8160
Pittsburgh, PA	18.4432
Pittsfield, MA	20.5161
Ponce, PR	8.9854
Portland, ME	18.4464
Portland-Vancouver, OR-WA	21.2978

TABLE 4d.—AVERAGE HOURLY WAGE FOR URBAN AREAS—Continued

Urban area	Average hourly wage
Providence-Warwick, RI	20.8739
Provo-Orem, UT	18.6788
Pueblo, CO	16.1052
Punta Gorda, FL	17.9343
Racine, WI	16.4769
Raleigh-Durham-Chapel Hill, NC.	18.0596
Rapid City, SD	15.6494
Reading, PA	18.1153
Redding, CA	22.1527
Reno, NV	20.9876
Richland-Kennewick-Pasco, WA	18.9472
Richmond-Petersburg, VA	16.7248
Riverside-San Bernardino, CA	22.1620
Roanoke, VA	16.0589
Rochester, MN	19.9607
Rochester, NY	18.1428
Rockford, IL	16.7939
Rocky Mount, NC	16.5823
Sacramento, CA	23.7695
Saginaw-Bay City-Midland, MI	17.9615
St Cloud, MN	18.0754
St Joseph, MO	16.0095
St Louis, MO-IL	16.7946
Salem, OR	18.1534
Salinas, CA	26.9989
Salt Lake City-Ogden, UT	18.2195
San Angelo, TX	14.7224
San Antonio, TX	15.8781
San Diego, CA	22.4937
San Francisco, CA	27.3080
San Jose, CA	27.0561
San Juan-Bayamon, PR	8.4669
San Luis Obispo-Atascadero-Paso Robles, CA	21.5899
Santa Barbara-Santa Maria-Lompoc, CA	20.9996
Santa Cruz-Watsonville, CA	26.3954
Santa Fe, NM	21.0277
Santa Rosa, CA	24.1046
Sarasota-Bradenton, FL	18.4291
Savannah, GA	16.7920
Scranton-Wilkes Barre-Hazleton, PA	16.5137
Seattle-Bellevue-Everett, WA	21.2065
Sharon, PA	16.8537
Sheboygan, WI	15.1072
Sherman-Denison, TX	16.6168
Shreveport-Bossier City, LA	17.0487
Sioux City, IA-NE	15.8679
Sioux Falls, SD	16.5847
South Bend, IN	17.8143
Spokane, WA	19.6518
Springfield, IL	16.9223
Springfield, MO	14.9476
Springfield, MA	19.8153
State College, PA	19.2360
Steubenville-Weirton, OH-WV	16.0044
Stockton-Lodi, CA	21.8188
Sumter, SC	15.7945
Syracuse, NY	18.0407
Tacoma, WA	20.4462
Tallahassee, FL	15.7519
Tampa-St. Petersburg-Clearwater, FL	17.5134
Terre Haute, IN	16.4157
Texarkana, TX-Texarkana, AR	15.5179
Toledo, OH	19.7305
Topeka, KS	18.1518
Trenton, NJ	19.2270

TABLE 4d.—AVERAGE HOURLY WAGE FOR URBAN AREAS—Continued

Urban area	Average hourly wage
Tucson, AZ	17.5524
Tulsa, OK	15.6323
Tuscaloosa, AL	14.9955
Tyler, TX	17.8508
Utica-Rome, NY	16.1173
Vallejo-Fairfield-Napa, CA	25.2072
Ventura, CA	23.3668
Victoria, TX	15.9679
Vineland-Millville-Bridgeton, NJ	18.8648
Visalia-Tulare-Porterville, CA	19.8859
Waco, TX	14.9500
Washington, DC-MD-VA-WV	20.9501
Waterloo-Cedar Falls, IA	16.2799
Wausau, WI	18.9938
West Palm Beach-Boca Raton, FL	19.2693
Wheeling, WV-OH	14.2732
Wichita, KS	18.1011
Wichita Falls, TX	14.6842
Williamsport, PA	16.1054
Wilmington-Newark, DE-MD	21.8395
Wilmington, NC	17.6028
Yakima, WA	18.6937
Yolo, CA	21.9919
York, PA	17.3484
Youngstown-Warren, OH	18.1388
Yuba City, CA	20.0865
Yuma, AZ	18.4923

TABLE 4e.—AVERAGE HOURLY WAGE FOR RURAL AREAS

Nonurban area	Average hourly wage
Alabama	13.5508
Alaska	22.7927
Arizona	15.4106
Arkansas	13.0577
California	19.2244
Colorado	15.5365
Connecticut	24.8299
Delaware	16.9772
Florida	16.4079
Georgia	14.4909
Hawaii	18.6401
Idaho	15.9158
Illinois	14.2153
Indiana	15.2039
Iowa	13.8935
Kansas	13.6955
Kentucky	14.4872
Louisiana	13.7616
Maine	15.9481
Maryland	16.0195
Massachusetts	20.0223
Michigan	16.5806
Minnesota	15.3816
Mississippi	12.6782
Missouri	13.6327
Montana	15.2814
Nebraska	13.6525
Nevada	16.6365
New Hampshire	18.9536
New Jersey [1]	.....
New Mexico	15.7706
New York	16.2939

TABLE 4e.—AVERAGE HOURLY WAGE FOR RURAL AREAS—Continued

Nonurban area	Average hourly wage
North Carolina	15.1121
North Dakota	13.8011
Ohio	15.6140
Oklahoma	13.2346
Oregon	17.9670
Pennsylvania	16.1247
Puerto Rico	7.3467
Rhode Island [1]	.....

TABLE 4e.—AVERAGE HOURLY WAGE FOR RURAL AREAS—Continued

Nonurban area	Average hourly wage
South Carolina	14.6343
South Dakota	13.1352
Tennessee	14.0446
Texas	13.7338
Utah	16.4331
Vermont	17.2545
Virginia	14.7381
Washington	18.4996

TABLE 4e.—AVERAGE HOURLY WAGE FOR RURAL AREAS—Continued

Nonurban area	Average hourly wage
West Virginia	15.1887
Wisconsin	15.9157
Wyoming	14.9877

[1] All counties within the State are classified urban.

BILLING CODE 4120–01–P

TABLE 5

LIST OF DIAGNOSIS RELATED GROUPS (DRGS), RELATIVE WEIGHTING FACTORS, GEOMETRIC MEAN LENGTH OF STAY, AND LENGTH OF STAY OUTLIER CUTOFF POINTS USED IN THE PROSPECTIVE PAYMENT SYSTEM

				RELATIVE WEIGHTS	GEOMETRIC MEAN LOS	ARITHMETIC MEAN LOS	OUTLIER THRESHOLD
1	01	SURG	CRANIOTOMY AGE >17 EXCEPT FOR TRAUMA	3.1021	8.7	12.4	32
2	01	SURG	CRANIOTOMY FOR TRAUMA AGE >17	3.0208	9.1	12.6	32
3	01	SURG	* CRANIOTOMY AGE 0-17	1.8777	6.6	11.4	30
4	01	SURG	SPINAL PROCEDURES	2.3294	6.5	9.9	29
5	01	SURG	EXTRACRANIAL VASCULAR PROCEDURES	1.5794	4.0	5.2	27
6	01	SURG	CARPAL TUNNEL RELEASE	.8170	2.4	4.0	25
7	01	SURG	PERIPH & CRANIAL NERVE & OTHER NERV SYST PROC W CC	2.4107	9.1	15.2	32
8	01	SURG	PERIPH & CRANIAL NERVE & OTHER NERV SYST PROC W/O CC	.9254	2.8	4.1	26
9	01	MED	SPINAL DISORDERS & INJURIES	1.2856	5.7	8.5	29
10	01	MED	NERVOUS SYSTEM NEOPLASMS W CC	1.2302	6.2	8.9	29
11	01	MED	NERVOUS SYSTEM NEOPLASMS W/O CC	.7919	3.7	5.2	27
12	01	MED	DEGENERATIVE NERVOUS SYSTEM DISORDERS	.9866	6.0	8.6	29
13	01	MED	MULTIPLE SCLEROSIS & CEREBELLAR ATAXIA	.7861	5.4	6.9	28
14	01	MED	SPECIFIC CEREBROVASCULAR DISORDERS EXCEPT TIA	1.2058	6.0	8.2	29
15	01	MED	TRANSIENT ISCHEMIC ATTACK & PRECEREBRAL OCCLUSIONS	.7226	3.8	4.9	27
16	01	MED	NONSPECIFIC CEREBROVASCULAR DISORDERS W CC	1.0592	5.3	7.4	28
17	01	MED	NONSPECIFIC CEREBROVASCULAR DISORDERS W/O CC	.5881	3.1	4.1	26
18	01	MED	CRANIAL & PERIPHERAL NERVE DISORDERS W CC	.9208	5.1	6.8	28
19	01	MED	CRANIAL & PERIPHERAL NERVE DISORDERS W/O CC	.5846	3.5	4.6	27
20	01	MED	NERVOUS SYSTEM INFECTION EXCEPT VIRAL MENINGITIS	2.1110	8.2	11.4	31
21	01	MED	VIRAL MENINGITIS	1.5355	6.5	8.7	29
22	01	MED	HYPERTENSIVE ENCEPHALOPATHY	.8140	4.0	5.1	27
23	01	MED	NONTRAUMATIC STUPOR & COMA	.8125	3.9	5.5	27
24	01	MED	SEIZURE & HEADACHE AGE >17 W CC	.9834	4.5	6.4	28
25	01	MED	SEIZURE & HEADACHE AGE >17 W/O CC	.5570	3.1	4.1	26
26	01	MED	SEIZURE & HEADACHE AGE 0-17	.8135	2.8	4.0	26
27	01	MED	TRAUMATIC STUPOR & COMA, COMA >1 HR	1.3465	3.9	7.1	27
28	01	MED	TRAUMATIC STUPOR & COMA, COMA <1 HR AGE >17 W CC	1.1988	5.2	7.8	28
29	01	MED	TRAUMATIC STUPOR & COMA, COMA <1 HR AGE >17 W/O CC	.5980	3.1	4.2	26
30	01	MED	* TRAUMATIC STUPOR & COMA, COMA <1 HR AGE 0-17	.3175	1.8	2.6	25
31	01	MED	CONCUSSION AGE >17 W CC	.7850	3.8	5.6	27
32	01	MED	CONCUSSION AGE >17 W/O CC	.4694	2.4	3.2	21
33	01	MED	* CONCUSSION AGE 0-17	.1996	1.4	1.6	24
34	01	MED	OTHER DISORDERS OF NERVOUS SYSTEM W CC	1.0542	4.9	6.9	28
35	01	MED	OTHER DISORDERS OF NERVOUS SYSTEM W/O CC	.5729	3.3	4.6	26

* MEDICARE DATA HAVE BEEN SUPPLEMENTED BY DATA FROM 19 STATES FOR LOW VOLUME DRGS.
** DRGS 469 AND 470 CONTAIN CASES WHICH COULD NOT BE ASSIGNED TO VALID DRGS.
NOTE: GEOMETRIC MEAN IS USED ONLY TO DETERMINE PAYMENT FOR TRANSFER CASES.
NOTE: ARITHMETIC MEAN IS USED ONLY TO DETERMINE PAYMENT FOR OUTLIER CASES.
NOTE: RELATIVE WEIGHTS ARE BASED ON MEDICARE PATIENT DATA AND MAY NOT BE APPROPRIATE FOR OTHER PATIENTS.

TABLE 5

LIST OF DIAGNOSIS RELATED GROUPS (DRGS), RELATIVE WEIGHTING FACTORS, GEOMETRIC MEAN LENGTH OF STAY, AND LENGTH OF STAY OUTLIER CUTOFF POINTS USED IN THE PROSPECTIVE PAYMENT SYSTEM

				RELATIVE WEIGHTS	GEOMETRIC MEAN LOS	ARITHMETIC MEAN LOS	OUTLIER THRESHOLD
36	02	SURG	RETINAL PROCEDURES	.6032	1.4	1.7	7
37	02	SURG	ORBITAL PROCEDURES	.8853	2.6	4.1	26
38	02	SURG	PRIMARY IRIS PROCEDURES	.4228	2.0	2.7	17
39	02	SURG	LENS PROCEDURES WITH OR WITHOUT VITRECTOMY	.5071	1.5	1.9	9
40	02	SURG	EXTRAOCULAR PROCEDURES EXCEPT ORBIT AGE >17	.7024	2.5	3.9	25
41	02	SURG *	EXTRAOCULAR PROCEDURES EXCEPT ORBIT AGE 0-17	.3232	1.5	2.1	25
42	02	SURG	INTRAOCULAR PROCEDURES EXCEPT RETINA, IRIS & LENS	.5642	1.6	2.2	12
43	02	MED	HYPHEMA	.3658	3.0	3.8	24
44	02	MED	ACUTE MAJOR EYE INFECTIONS	.6152	4.8	5.9	28
45	02	MED	NEUROLOGICAL EYE DISORDERS	.6457	3.3	4.3	25
46	02	MED	OTHER DISORDERS OF THE EYE AGE >17 W CC	.7526	4.2	5.8	27
47	02	MED	OTHER DISORDERS OF THE EYE AGE >17 W/O CC	.4478	3.0	3.9	26
48	02	MED *	OTHER DISORDERS OF THE EYE AGE 0-17	.2849	2.8	3.6	26
49	03	SURG	MAJOR HEAD & NECK PROCEDURES	1.7784	4.7	7.0	28
50	03	SURG	SIALOADENECTOMY	.7521	1.8	2.4	12
51	03	SURG	SALIVARY GLAND PROCEDURES EXCEPT SIALOADENECTOMY	.7294	2.0	3.0	22
52	03	SURG	CLEFT LIP & PALATE REPAIR	.8443	2.4	3.3	25
53	03	SURG	SINUS & MASTOID PROCEDURES AGE >17	.9397	2.2	3.7	25
54	03	SURG *	SINUS & MASTOID PROCEDURES AGE 0-17	.4617	1.6	2.7	25
55	03	SURG	MISCELLANEOUS EAR, NOSE, MOUTH & THROAT PROCEDURES	.7203	1.9	3.0	22
56	03	SURG	RHINOPLASTY	.8257	2.1	3.0	21
57	03	SURG	T&A PROC, EXCEPT TONSILLECTOMY &/OR ADENOIDECTOMY ONLY, AGE >17	1.0442	3.2	4.9	26
58	03	SURG *	T&A PROC, EXCEPT TONSILLECTOMY &/OR ADENOIDECTOMY ONLY, AGE 0-17	.2622	1.5	2.0	25
59	03	SURG	TONSILLECTOMY &/OR ADENOIDECTOMY ONLY, AGE >17	.5968	2.1	2.9	19
60	03	SURG *	TONSILLECTOMY &/OR ADENOIDECTOMY ONLY, AGE 0-17	.1997	1.1	1.2	24
61	03	SURG	MYRINGOTOMY W TUBE INSERTION AGE >17	1.2358	3.1	5.9	26
62	03	SURG *	MYRINGOTOMY W TUBE INSERTION AGE 0-17	.2827	1.4	2.0	24
63	03	SURG	OTHER EAR, NOSE, MOUTH & THROAT O.R. PROCEDURES	1.1478	3.3	4.9	26
64	03	MED	EAR, NOSE, MOUTH & THROAT MALIGNANCY	1.1954	5.1	8.2	28
65	03	MED	DYSEQUILIBRIUM	.5159	2.9	3.7	21
66	03	MED	EPISTAXIS	.5321	3.0	3.9	24
67	03	MED	EPIGLOTTITIS	.8105	3.4	4.4	26
68	03	MED	OTITIS MEDIA & URI AGE >17 W CC	.7064	4.2	5.1	27
69	03	MED	OTITIS MEDIA & URI AGE >17 W/O CC	.5123	3.4	4.0	21
70	03	MED	OTITIS MEDIA & URI AGE 0-17	.3219	2.3	2.8	15

* MEDICARE DATA HAVE BEEN SUPPLEMENTED BY DATA FROM 19 STATES FOR LOW VOLUME DRGS.
** DRGS 469 AND 470 CONTAIN CASES WHICH COULD NOT BE ASSIGNED TO VALID DRGS.
NOTE: GEOMETRIC MEAN IS USED ONLY TO DETERMINE PAYMENT FOR TRANSFER CASES.
NOTE: ARITHMETIC MEAN IS USED ONLY TO DETERMINE PAYMENT FOR OUTLIER CASES.
NOTE: RELATIVE WEIGHTS ARE BASED ON MEDICARE PATIENT DATA AND MAY NOT BE APPROPRIATE FOR OTHER PATIENTS.

TABLE 5

LIST OF DIAGNOSIS RELATED GROUPS (DRGS), RELATIVE WEIGHTING FACTORS, GEOMETRIC MEAN LENGTH OF STAY, AND LENGTH OF STAY OUTLIER CUTOFF POINTS USED IN THE PROSPECTIVE PAYMENT SYSTEM

				RELATIVE WEIGHTS	GEOMETRIC MEAN LOS	ARITHMETIC MEAN LOS	OUTLIER THRESHOLD
71	03	MED	LARYNGOTRACHEITIS	.6689	3.5	4.3	25
72	03	MED	NASAL TRAUMA & DEFORMITY	.6499	3.0	4.7	26
73	03	MED	OTHER EAR, NOSE, MOUTH & THROAT DIAGNOSES AGE >17	.7738	4.0	5.4	27
74	03	MED	* OTHER EAR, NOSE, MOUTH & THROAT DIAGNOSES AGE 0-17	.3212	2.2	3.3	25
75	04	SURG	MAJOR CHEST PROCEDURES	3.1097	9.3	11.9	32
76	04	SURG	OTHER RESP SYSTEM O.R. PROCEDURES W CC	2.5613	9.6	13.4	33
77	04	SURG	OTHER RESP SYSTEM O.R. PROCEDURES W/O CC	1.0778	3.7	5.7	27
78	04	MED	PULMONARY EMBOLISM	1.4126	7.4	8.8	30
79	04	MED	RESPIRATORY INFECTIONS & INFLAMMATIONS AGE >17 W CC	1.6545	7.8	10.1	31
80	04	MED	RESPIRATORY INFECTIONS & INFLAMMATIONS AGE >17 W/O CC	.8966	5.5	6.9	28
81	04	MED	* RESPIRATORY INFECTIONS & INFLAMMATIONS AGE 0-17	1.0085	6.2	9.2	29
82	04	MED	RESPIRATORY NEOPLASMS	1.3174	6.1	8.4	29
83	04	MED	MAJOR CHEST TRAUMA W CC	.9460	5.2	6.9	28
84	04	MED	MAJOR CHEST TRAUMA W/O CC	.4908	3.0	4.2	25
85	04	MED	PLEURAL EFFUSION W CC	1.1906	5.9	7.8	29
86	04	MED	PLEURAL EFFUSION W/O CC	.6724	3.5	4.5	27
87	04	MED	PULMONARY EDEMA & RESPIRATORY FAILURE	1.3480	5.3	7.2	28
88	04	MED	CHRONIC OBSTRUCTIVE PULMONARY DISEASE	1.0004	5.3	6.6	28
89	04	MED	SIMPLE PNEUMONIA & PLEURISY AGE >17 W CC	1.1163	6.2	7.6	29
90	04	MED	SIMPLE PNEUMONIA & PLEURISY AGE >17 W/O CC	.6772	4.6	5.4	26
91	04	MED	SIMPLE PNEUMONIA & PLEURISY AGE 0-17	.6995	3.1	4.0	26
92	04	MED	INTERSTITIAL LUNG DISEASE W CC	1.1996	6.0	7.7	29
93	04	MED	INTERSTITIAL LUNG DISEASE W/O CC	.7443	4.1	5.2	27
94	04	MED	PNEUMOTHORAX W CC	1.2300	6.2	8.1	29
95	04	MED	PNEUMOTHORAX W/O CC	.6248	3.8	4.8	26
96	04	MED	BRONCHITIS & ASTHMA AGE >17 W CC	.8339	4.9	5.9	28
97	04	MED	BRONCHITIS & ASTHMA AGE >17 W/O CC	.5952	3.8	4.5	23
98	04	MED	BRONCHITIS & ASTHMA AGE 0-17	.6858	4.0	5.0	27
99	04	MED	RESPIRATORY SIGNS & SYMPTOMS W CC	.6897	2.9	3.9	25
100	04	MED	RESPIRATORY SIGNS & SYMPTOMS W/O CC	.4968	2.1	2.6	14
101	04	MED	OTHER RESPIRATORY SYSTEM DIAGNOSES W CC	.9101	4.5	6.0	27
102	04	MED	OTHER RESPIRATORY SYSTEM DIAGNOSES W/O CC	.5495	2.9	4.0	26
103	05	SURG	HEART TRANSPLANT	13.9042	27.7	39.6	51
104	05	SURG	CARDIAC VALVE PROCEDURES W CARDIAC CATH	7.3620	13.3	16.0	36
105	05	SURG	CARDIAC VALVE PROCEDURES W/O CARDIAC CATH	5.6640	10.0	12.0	33

* MEDICARE DATA HAVE BEEN SUPPLEMENTED BY DATA FROM 19 STATES FOR LOW VOLUME DRGS.
** DRGS 469 AND 470 CONTAIN CASES WHICH COULD NOT BE ASSIGNED TO VALID DRGS.
NOTE: GEOMETRIC MEAN IS USED ONLY TO DETERMINE PAYMENT FOR TRANSFER CASES.
NOTE: ARITHMETIC MEAN IS USED ONLY TO DETERMINE PAYMENT FOR OUTLIER CASES.
NOTE: RELATIVE WEIGHTS ARE BASED ON MEDICARE PATIENT DATA AND MAY NOT BE APPROPRIATE FOR OTHER PATIENTS.

TABLE 5

LIST OF DIAGNOSIS RELATED GROUPS (DRGS), RELATIVE WEIGHTING FACTORS, GEOMETRIC MEAN LENGTH OF STAY, AND LENGTH OF STAY OUTLIER CUTOFF POINTS USED IN THE PROSPECTIVE PAYMENT SYSTEM

				RELATIVE WEIGHTS	GEOMETRIC MEAN LOS	ARITHMETIC MEAN LOS	OUTLIER THRESHOLD
106	05	SURG	CORONARY BYPASS W CARDIAC CATH	5.6377	11.2	12.7	34
107	05	SURG	CORONARY BYPASS W/O CARDIAC CATH	4.1946	8.6	9.8	32
108	05	SURG	OTHER CARDIOTHORACIC PROCEDURES	5.9741	10.5	13.5	33
109			NO LONGER VALID	.0000	.0	.0	0
110	05	SURG	MAJOR CARDIOVASCULAR PROCEDURES W CC	4.1184	8.7	11.6	32
111	05	SURG	MAJOR CARDIOVASCULAR PROCEDURES W/O CC	2.1876	6.1	7.0	29
112	05	SURG	PERCUTANEOUS CARDIOVASCULAR PROCEDURES	1.9988	3.6	5.0	27
113	05	SURG	AMPUTATION FOR CIRC SYSTEM DISORDERS EXCEPT UPPER LIMB & TOE	2.7516	11.6	15.9	35
114	05	SURG	UPPER LIMB & TOE AMPUTATION FOR CIRC SYSTEM DISORDERS	1.5388	7.4	10.4	30
115	05	SURG	PERM CARDIAC PACEMAKER IMPLANT W AMI, HEART FAILURE OR SHOCK	3.5481	9.5	11.8	32
116	05	SURG	OTH PERM CARDIAC PACEMAKER IMPLANT OR AICD LEAD OR GENERATOR PROC	2.3963	4.2	5.9	27
117	05	SURG	CARDIAC PACEMAKER REVISION EXCEPT DEVICE REPLACEMENT	1.1497	3.0	4.5	26
118	05	SURG	CARDIAC PACEMAKER DEVICE REPLACEMENT	1.5298	2.2	3.4	25
119	05	SURG	VEIN LIGATION & STRIPPING	1.1272	3.4	5.9	26
120	05	SURG	OTHER CIRCULATORY SYSTEM O.R. PROCEDURES	1.9548	5.8	10.1	29
121	05	MED	CIRCULATORY DISORDERS W AMI & C.V. COMP DISCH ALIVE	1.6442	7.0	8.4	30
122	05	MED	CIRCULATORY DISORDERS W AMI W/O C.V. COMP DISCH ALIVE	1.1596	4.9	5.8	28
123	05	MED	CIRCULATORY DISORDERS W AMI, EXPIRED	1.4370	2.8	4.9	26
124	05	MED	CIRCULATORY DISORDERS EXCEPT AMI, W CARD CATH & COMPLEX DIAG	1.2954	4.0	5.3	27
125	05	MED	CIRCULATORY DISORDERS EXCEPT AMI, W CARD CATH W/O COMPLEX DIAG	.8770	2.4	3.2	22
126	05	MED	ACUTE & SUBACUTE ENDOCARDITIS	2.5935	12.3	16.2	35
127	05	MED	HEART FAILURE & SHOCK	1.0305	5.2	6.7	28
128	05	MED	DEEP VEIN THROMBOPHLEBITIS	.7916	6.3	7.2	29
129	05	MED	CARDIAC ARREST, UNEXPLAINED	1.1342	2.1	3.7	25
130	05	MED	PERIPHERAL VASCULAR DISORDERS W CC	.9346	5.6	7.2	29
131	05	MED	PERIPHERAL VASCULAR DISORDERS W/O CC	.5941	4.4	5.4	27
132	05	MED	ATHEROSCLEROSIS W CC	.6815	3.1	4.0	23
133	05	MED	ATHEROSCLEROSIS W/O CC	.5349	2.5	3.1	18
134	05	MED	HYPERTENSION	.5797	3.3	4.2	25
135	05	MED	CARDIAC CONGENITAL & VALVULAR DISORDERS AGE >17 W CC	.8914	4.1	5.7	27
136	05	MED	CARDIAC CONGENITAL & VALVULAR DISORDERS AGE >17 W/O CC	.5754	2.8	3.6	22
137	05	MED	* CARDIAC CONGENITAL & VALVULAR DISORDERS AGE 0-17	.7837	3.0	6.1	26
138	05	MED	CARDIAC ARRHYTHMIA & CONDUCTION DISORDERS W CC	.7991	3.7	4.9	27
139	05	MED	CARDIAC ARRHYTHMIA & CONDUCTION DISORDERS W/O CC	.4858	2.5	3.1	18
140	05	MED	ANGINA PECTORIS	.6312	3.1	3.9	22

* MEDICARE DATA HAVE BEEN SUPPLEMENTED BY DATA FROM 19 STATES FOR LOW VOLUME DRGS.
** DRGS 469 AND 470 CONTAIN CASES WHICH COULD NOT BE ASSIGNED TO VALID DRGS.
NOTE: GEOMETRIC MEAN IS USED ONLY TO DETERMINE PAYMENT FOR TRANSFER CASES.
NOTE: ARITHMETIC MEAN IS USED ONLY TO DETERMINE PAYMENT FOR OUTLIER CASES.
NOTE: RELATIVE WEIGHTS ARE BASED ON MEDICARE PATIENT DATA AND MAY NOT BE APPROPRIATE FOR OTHER PATIENTS.

TABLE 5

LIST OF DIAGNOSIS RELATED GROUPS (DRGS), RELATIVE WEIGHTING FACTORS, GEOMETRIC MEAN LENGTH OF STAY, AND LENGTH OF STAY OUTLIER CUTOFF POINTS USED IN THE PROSPECTIVE PAYMENT SYSTEM

				RELATIVE WEIGHTS	GEOMETRIC MEAN LOS	ARITHMETIC MEAN LOS	OUTLIER THRESHOLD
141	05	MED	SYNCOPE & COLLAPSE W CC	.7109	3.7	4.9	27
142	05	MED	SYNCOPE & COLLAPSE W/O CC	.5155	2.7	3.4	20
143	05	MED	CHEST PAIN	.5167	2.3	2.8	15
144	05	MED	OTHER CIRCULATORY SYSTEM DIAGNOSES W CC	1.0674	4.3	6.1	27
145	05	MED	OTHER CIRCULATORY SYSTEM DIAGNOSES W/O CC	.6093	2.6	3.4	22
146	06	SURG	RECTAL RESECTION W CC	2.5627	10.2	11.7	33
147	06	SURG	RECTAL RESECTION W/O CC	1.4850	7.0	7.7	29
148	06	SURG	MAJOR SMALL & LARGE BOWEL PROCEDURES W CC	3.2953	11.7	14.1	35
149	06	SURG	MAJOR SMALL & LARGE BOWEL PROCEDURES W/O CC	1.5017	7.2	7.9	26
150	06	SURG	PERITONEAL ADHESIOLYSIS W CC	2.6275	10.0	12.3	33
151	06	SURG	PERITONEAL ADHESIOLYSIS W/O CC	1.1999	5.2	6.5	28
152	06	SURG	MINOR SMALL & LARGE BOWEL PROCEDURES W CC	1.8646	8.0	9.6	31
153	06	SURG	MINOR SMALL & LARGE BOWEL PROCEDURES W/O CC	1.1012	5.6	6.3	26
154	06	SURG	STOMACH, ESOPHAGEAL & DUODENAL PROCEDURES AGE >17 W CC	4.1861	12.5	16.0	35
155	06	SURG	STOMACH, ESOPHAGEAL & DUODENAL PROCEDURES AGE >17 W/O CC	1.3221	5.2	6.4	28
156	06	SURG *	STOMACH, ESOPHAGEAL & DUODENAL PROCEDURES AGE 0-17	.8072	4.0	6.7	27
157	06	SURG	ANAL & STOMAL PROCEDURES W CC	1.1013	4.3	6.0	27
158	06	SURG	ANAL & STOMAL PROCEDURES W/O CC	.5608	2.2	2.9	17
159	06	SURG	HERNIA PROCEDURES EXCEPT INGUINAL & FEMORAL AGE >17 W CC	1.1673	4.1	5.6	27
160	06	SURG	HERNIA PROCEDURES EXCEPT INGUINAL & FEMORAL AGE >17 W/O CC	.6599	2.4	3.0	17
161	06	SURG	INGUINAL & FEMORAL HERNIA PROCEDURES AGE >17 W CC	.9545	3.1	4.5	26
162	06	SURG	INGUINAL & FEMORAL HERNIA PROCEDURES AGE >17 W/O CC	.5257	1.7	2.1	11
163	06	SURG	HERNIA PROCEDURES AGE 0-17	.7771	3.6	5.2	27
164	06	SURG	APPENDECTOMY W COMPLICATED PRINCIPAL DIAG W CC	2.2107	8.4	9.8	31
165	06	SURG	APPENDECTOMY W COMPLICATED PRINCIPAL DIAG W/O CC	1.1883	5.2	5.9	24
166	06	SURG	APPENDECTOMY W/O COMPLICATED PRINCIPAL DIAG W CC	1.3578	4.9	6.0	28
167	06	SURG	APPENDECTOMY W/O COMPLICATED PRINCIPAL DIAG W/O CC	.7760	2.9	3.5	15
168	03	SURG	MOUTH PROCEDURES W CC	1.1856	3.6	5.7	27
169	03	SURG	MOUTH PROCEDURES W/O CC	.6410	2.0	2.7	17
170	06	SURG	OTHER DIGESTIVE SYSTEM O.R. PROCEDURES W CC	2.7068	9.1	13.3	32
171	06	SURG	OTHER DIGESTIVE SYSTEM O.R. PROCEDURES W/O CC	1.0961	4.2	5.8	27
172	06	MED	DIGESTIVE MALIGNANCY W CC	1.2884	6.1	8.8	29
173	06	MED	DIGESTIVE MALIGNANCY W/O CC	.6259	3.0	4.3	26
174	06	MED	G.I. HEMORRHAGE W CC	.9847	4.7	6.0	28
175	06	MED	G.I. HEMORRHAGE W/O CC	.5293	3.0	3.7	18

* MEDICARE DATA HAVE BEEN SUPPLEMENTED BY DATA FROM 19 STATES FOR LOW VOLUME DRGS.
** DRGS 469 AND 470 CONTAIN CASES WHICH COULD NOT BE ASSIGNED TO VALID DRGS.
NOTE: GEOMETRIC MEAN IS USED ONLY TO DETERMINE PAYMENT FOR TRANSFER CASES.
NOTE: ARITHMETIC MEAN IS USED ONLY TO DETERMINE PAYMENT FOR OUTLIER CASES.
NOTE: RELATIVE WEIGHTS ARE BASED ON MEDICARE PATIENT DATA AND MAY NOT BE APPROPRIATE FOR OTHER PATIENTS.

TABLE 5

LIST OF DIAGNOSIS RELATED GROUPS (DRGS), RELATIVE WEIGHTING FACTORS, GEOMETRIC MEAN LENGTH OF STAY, AND LENGTH OF STAY OUTLIER CUTOFF POINTS USED IN THE PROSPECTIVE PAYMENT SYSTEM

				RELATIVE WEIGHTS	GEOMETRIC MEAN LOS	ARITHMETIC MEAN LOS	OUTLIER THRESHOLD
176	06	MED	COMPLICATED PEPTIC ULCER	1.0578	5.0	6.5	28
177	06	MED	UNCOMPLICATED PEPTIC ULCER W CC	.8246	4.4	5.4	27
178	06	MED	UNCOMPLICATED PEPTIC ULCER W/O CC	.5846	3.2	3.8	20
179	06	MED	INFLAMMATORY BOWEL DISEASE	1.0964	6.0	7.7	29
180	06	MED	G.I. OBSTRUCTION W CC	.9143	5.0	6.5	28
181	06	MED	G.I. OBSTRUCTION W/O CC	.4901	3.3	4.0	21
182	06	MED	ESOPHAGITIS, GASTROENT & MISC DIGEST DISORDERS AGE >17 W CC	.7755	4.1	5.4	27
183	06	MED	ESOPHAGITIS, GASTROENT & MISC DIGEST DISORDERS AGE >17 W/O CC	.5322	2.9	3.6	21
184	06	MED	ESOPHAGITIS, GASTROENT & MISC DIGEST DISORDERS AGE 0-17	.4071	2.5	3.0	18
185	03	MED	DENTAL & ORAL DIS EXCEPT EXTRACTIONS & RESTORATIONS, AGE >17	.8953	4.1	5.8	27
186	03	MED	* DENTAL & ORAL DIS EXCEPT EXTRACTIONS & RESTORATIONS, AGE 0-17	.3077	2.5	3.3	26
187	03	MED	DENTAL EXTRACTIONS & RESTORATIONS	.6549	2.8	3.8	26
188	06	MED	OTHER DIGESTIVE SYSTEM DIAGNOSES AGE >17 W CC	1.0421	4.7	6.5	28
189	06	MED	OTHER DIGESTIVE SYSTEM DIAGNOSES AGE >17 W/O CC	.5042	2.6	3.6	26
190	06	MED	OTHER DIGESTIVE SYSTEM DIAGNOSES AGE 0-17	.9416	4.6	6.4	28
191	07	SURG	PANCREAS, LIVER & SHUNT PROCEDURES W CC	4.4383	12.8	17.4	36
192	07	SURG	PANCREAS, LIVER & SHUNT PROCEDURES W/O CC	1.6254	6.2	8.0	29
193	07	SURG	BILIARY TRACT PROC EXCEPT ONLY CHOLECYST W OR W/O C.D.E. W CC	3.1841	12.2	14.8	35
194	07	SURG	BILIARY TRACT PROC EXCEPT ONLY CHOLECYST W OR W/O C.D.E. W/O CC	1.6029	6.6	8.2	30
195	07	SURG	CHOLECYSTECTOMY W C.D.E. W CC	2.5960	9.4	11.1	32
196	07	SURG	CHOLECYSTECTOMY W C.D.E. W/O CC	1.5103	6.0	6.9	29
197	07	SURG	CHOLECYSTECTOMY EXCEPT BY LAPAROSCOPE W/O C.D.E. W CC	2.1818	7.9	9.6	31
198	07	SURG	CHOLECYSTECTOMY EXCEPT BY LAPAROSCOPE W/O C.D.E. W/O CC	1.0902	4.4	5.2	22
199	07	SURG	HEPATOBILIARY DIAGNOSTIC PROCEDURE FOR MALIGNANCY	2.3252	9.1	12.4	32
200	07	SURG	HEPATOBILIARY DIAGNOSTIC PROCEDURE FOR NON-MALIGNANCY	3.0103	7.9	12.6	31
201	07	SURG	OTHER HEPATOBILIARY OR PANCREAS O.R. PROCEDURES	3.2472	11.7	16.0	35
202	07	MED	CIRRHOSIS & ALCOHOLIC HEPATITIS	1.3178	6.1	8.3	29
203	07	MED	MALIGNANCY OF HEPATOBILIARY SYSTEM OR PANCREAS	1.2192	5.9	8.2	29
204	07	MED	DISORDERS OF PANCREAS EXCEPT MALIGNANCY	1.1998	5.5	7.2	28
205	07	MED	DISORDERS OF LIVER EXCEPT MALIG,CIRR,ALC HEPA W CC	1.2279	5.8	8.0	29
206	07	MED	DISORDERS OF LIVER EXCEPT MALIG,CIRR,ALC HEPA W/O CC	.6503	3.4	4.7	26
207	07	MED	DISORDERS OF THE BILIARY TRACT W CC	1.0219	4.7	6.2	28
208	07	MED	DISORDERS OF THE BILIARY TRACT W/O CC	.5682	2.7	3.4	22
209	08	SURG	MAJOR JOINT & LIMB REATTACHMENT PROCEDURES OF LOWER EXTREMITY	2.2669	6.8	7.6	27
210	08	SURG	HIP & FEMUR PROCEDURES EXCEPT MAJOR JOINT AGE >17 W CC	1.8508	8.1	9.7	31

* MEDICARE DATA HAVE BEEN SUPPLEMENTED BY DATA FROM 19 STATES FOR LOW VOLUME DRGS.
** DRGS 469 AND 470 CONTAIN CASES WHICH COULD NOT BE ASSIGNED TO VALID DRGS.
NOTE: GEOMETRIC MEAN IS USED ONLY TO DETERMINE PAYMENT FOR TRANSFER CASES.
NOTE: ARITHMETIC MEAN IS USED ONLY TO DETERMINE PAYMENT FOR OUTLIER CASES.
NOTE: RELATIVE WEIGHTS ARE BASED ON MEDICARE PATIENT DATA AND MAY NOT BE APPROPRIATE FOR OTHER PATIENTS.

TABLE 5

LIST OF DIAGNOSIS RELATED GROUPS (DRGS), RELATIVE WEIGHTING FACTORS, GEOMETRIC MEAN LENGTH OF STAY, AND LENGTH OF STAY OUTLIER CUTOFF POINTS USED IN THE PROSPECTIVE PAYMENT SYSTEM

				RELATIVE WEIGHTS	GEOMETRIC MEAN LOS	ARITHMETIC MEAN LOS	OUTLIER THRESHOLD
211	08	SURG	HIP & FEMUR PROCEDURES EXCEPT MAJOR JOINT AGE >17 W/O CC	1.2658	6.2	7.1	28
212	08	SURG	HIP & FEMUR PROCEDURES EXCEPT MAJOR JOINT AGE 0-17	1.0840	3.5	4.3	25
213	08	SURG	AMPUTATION FOR MUSCULOSKELETAL SYSTEM & CONN TISSUE DISORDERS	1.7187	7.6	10.6	31
214	08	SURG	BACK & NECK PROCEDURES W CC	1.9105	5.7	7.3	29
215	08	SURG	BACK & NECK PROCEDURES W/O CC	1.0774	3.4	4.1	21
216	08	SURG	BIOPSIES OF MUSCULOSKELETAL SYSTEM & CONNECTIVE TISSUE	2.1032	8.6	12.2	32
217	08	SURG	WND DEBRID & SKN GRFT EXCEPT HAND,FOR MUSCSKELET & CONN TISS DIS	2.8961	11.0	17.0	34
218	08	SURG	LOWER EXTREM & HUMER PROC EXCEPT HIP,FOOT,FEMUR AGE >17 W CC	1.4086	5.2	6.8	28
219	08	SURG	LOWER EXTREM & HUMER PROC EXCEPT HIP,FOOT,FEMUR AGE >17 W/O CC	.9099	3.3	4.1	21
220	08	SURG *	LOWER EXTREM & HUMER PROC EXCEPT HIP,FOOT,FEMUR AGE 0-17	.5590	2.4	3.4	25
221	08	SURG	KNEE PROCEDURES W CC	1.8413	6.2	8.8	29
222	08	SURG	KNEE PROCEDURES W/O CC	.9613	3.2	4.2	26
223	08	SURG	MAJOR SHOULDER/ELBOW PROC, OR OTHER UPPER EXTREMITY PROC W CC	.8372	2.3	3.0	17
224	08	SURG	SHOULDER,ELBOW OR FOREARM PROC,EXC MAJOR JOINT PROC, W/O CC	.6922	1.9	2.4	11
225	08	SURG	FOOT PROCEDURES	.9518	3.3	5.1	26
226	08	SURG	SOFT TISSUE PROCEDURES W CC	1.3526	4.7	7.2	28
227	08	SURG	SOFT TISSUE PROCEDURES W/O CC	.7207	2.4	3.2	20
228	08	SURG	MAJOR THUMB OR JOINT PROC,OR OTH HAND OR WRIST PROC W CC	.9055	2.4	3.7	25
229	08	SURG	HAND OR WRIST PROC, EXCEPT MAJOR JOINT PROC, W/O CC	.5923	1.8	2.4	14
230	08	SURG	LOCAL EXCISION & REMOVAL OF INT FIX DEVICES OF HIP & FEMUR	1.0374	3.5	5.5	26
231	08	SURG	LOCAL EXCISION & REMOVAL OF INT FIX DEVICES EXCEPT HIP & FEMUR	1.2158	3.5	5.5	26
232	08	SURG	ARTHROSCOPY	1.0553	2.6	4.5	26
233	08	SURG	OTHER MUSCULOSKELET SYS & CONN TISS O.R. PROC W CC	1.9162	6.8	9.8	30
234	08	SURG	OTHER MUSCULOSKELET SYS & CONN TISS O.R. PROC W/O CC	.9929	3.3	4.4	26
235	08	MED	FRACTURES OF FEMUR	.8489	5.2	7.8	28
236	08	MED	FRACTURES OF HIP & PELVIS	.7781	5.2	7.1	28
237	08	MED	SPRAINS, STRAINS, & DISLOCATIONS OF HIP, PELVIS & THIGH	.5677	3.6	4.9	27
238	08	MED	OSTEOMYELITIS	1.4349	8.4	11.4	31
239	08	MED	PATHOLOGICAL FRACTURES & MUSCULOSKELETAL & CONN TISS MALIGNANCY	1.0207	6.3	8.4	29
240	08	MED	CONNECTIVE TISSUE DISORDERS W CC	1.1859	5.9	8.0	29
241	08	MED	CONNECTIVE TISSUE DISORDERS W/O CC	.5821	3.7	4.8	27
242	08	MED	SEPTIC ARTHRITIS	1.1273	6.6	9.0	30
243	08	MED	MEDICAL BACK PROBLEMS	.7238	4.7	6.1	28
244	08	MED	BONE DISEASES & SPECIFIC ARTHROPATHIES W CC	.7385	4.6	6.4	28
245	08	MED	BONE DISEASES & SPECIFIC ARTHROPATHIES W/O CC	.4951	3.3	4.5	26

* MEDICARE DATA HAVE BEEN SUPPLEMENTED BY DATA FROM 19 STATES FOR LOW VOLUME DRGS.
** DRGS 469 AND 470 CONTAIN CASES WHICH COULD NOT BE ASSIGNED TO VALID DRGS.
NOTE: GEOMETRIC MEAN IS USED ONLY TO DETERMINE PAYMENT FOR TRANSFER CASES.
NOTE: ARITHMETIC MEAN IS USED ONLY TO DETERMINE PAYMENT FOR OUTLIER CASES.
NOTE: RELATIVE WEIGHTS ARE BASED ON MEDICARE PATIENT DATA AND MAY NOT BE APPROPRIATE FOR OTHER PATIENTS.

TABLE 5

LIST OF DIAGNOSIS RELATED GROUPS (DRGS), RELATIVE WEIGHTING FACTORS, GEOMETRIC MEAN LENGTH OF STAY, AND LENGTH OF STAY OUTLIER CUTOFF POINTS USED IN THE PROSPECTIVE PAYMENT SYSTEM

				RELATIVE WEIGHTS	GEOMETRIC MEAN LOS	ARITHMETIC MEAN LOS	OUTLIER THRESHOLD
246	08	MED	NON-SPECIFIC ARTHROPATHIES	.5664	3.7	4.7	27
247	08	MED	SIGNS & SYMPTOMS OF MUSCULOSKELETAL SYSTEM & CONN TISSUE	.5533	3.1	4.3	26
248	08	MED	TENDONITIS, MYOSITIS & BURSITIS	.7301	4.2	5.7	27
249	08	MED	AFTERCARE, MUSCULOSKELETAL SYSTEM & CONNECTIVE TISSUE	.6505	3.1	4.6	26
250	08	MED	FX, SPRN, STRN & DISL OF FOREARM, HAND, FOOT AGE >17 W CC	.7157	3.9	5.6	27
251	08	MED	FX, SPRN, STRN & DISL OF FOREARM, HAND, FOOT AGE >17 W/O CC	.4370	2.4	3.2	21
252	08	MED	* FX, SPRN, STRN & DISL OF FOREARM, HAND, FOOT AGE 0-17	.2429	1.3	1.6	24
253	08	MED	FX, SPRN, STRN & DISL OF UPARM,LOWLEG EX FOOT AGE >17 W CC	.7588	4.7	6.6	28
254	08	MED	FX, SPRN, STRN & DISL OF UPARM,LOWLEG EX FOOT AGE >17 W/O CC	.4290	3.0	4.0	26
255	08	MED	* FX, SPRN, STRN & DISL OF UPARM,LOWLEG EX FOOT AGE 0-17	.2828	1.9	2.6	25
256	08	MED	OTHER MUSCULOSKELETAL SYSTEM & CONNECTIVE TISSUE DIAGNOSES	.6424	3.2	4.4	26
257	09	SURG	TOTAL MASTECTOMY FOR MALIGNANCY W CC	.8966	3.1	3.9	20
258	09	SURG	TOTAL MASTECTOMY FOR MALIGNANCY W/O CC	.6918	2.4	2.8	11
259	09	SURG	SUBTOTAL MASTECTOMY FOR MALIGNANCY W CC	.8746	2.6	4.1	26
260	09	SURG	SUBTOTAL MASTECTOMY FOR MALIGNANCY W/O CC	.5735	1.7	2.0	8
261	09	SURG	BREAST PROC FOR NON-MALIGNANCY EXCEPT BIOPSY & LOCAL EXCISION	.8125	1.9	2.6	13
262	09	SURG	BREAST BIOPSY & LOCAL EXCISION FOR NON-MALIGNANCY	.7172	2.6	4.0	26
263	09	SURG	SKIN GRAFT &/OR DEBRID FOR SKN ULCER OR CELLULITIS W CC	2.2289	11.1	15.7	34
264	09	SURG	SKIN GRAFT &/OR DEBRID FOR SKN ULCER OR CELLULITIS W/O CC	1.1465	6.6	9.1	30
265	09	SURG	SKIN GRAFT &/OR DEBRID EXCEPT FOR SKIN ULCER OR CELLULITIS W CC	1.4126	4.9	7.9	28
266	09	SURG	SKIN GRAFT &/OR DEBRID EXCEPT FOR SKIN ULCER OR CELLULITIS W/O CC	.7362	2.7	3.8	26
267	09	SURG	PERIANAL & PILONIDAL PROCEDURES	.8204	2.8	4.5	26
268	09	SURG	SKIN, SUBCUTANEOUS TISSUE & BREAST PLASTIC PROCEDURES	.9030	2.7	4.4	26
269	09	SURG	OTHER SKIN, SUBCUT TISS & BREAST PROC W CC	1.6400	6.7	9.9	30
270	09	SURG	OTHER SKIN, SUBCUT TISS & BREAST PROC W/O CC	.6641	2.3	3.5	25
271	09	MED	SKIN ULCERS	1.1063	7.1	9.4	30
272	09	MED	MAJOR SKIN DISORDERS W CC	1.0149	6.1	8.1	29
273	09	MED	MAJOR SKIN DISORDERS W/O CC	.6303	4.4	6.0	27
274	09	MED	MALIGNANT BREAST DISORDERS W CC	1.0768	5.5	8.1	28
275	09	MED	MALIGNANT BREAST DISORDERS W/O CC	.4861	2.4	3.4	25
276	09	MED	NON-MALIGANT BREAST DISORDERS	.6481	4.2	5.3	27
277	09	MED	CELLULITIS AGE >17 W CC	.8676	5.9	7.3	29
278	09	MED	CELLULITIS AGE >17 W/O CC	.5698	4.5	5.4	27
279	09	MED	* CELLULITIS AGE 0-17	.2909	3.3	4.0	26
280	09	MED	TRAUMA TO THE SKIN, SUBCUT TISS & BREAST AGE >17 W CC	.6808	4.0	5.5	27

* MEDICARE DATA HAVE BEEN SUPPLEMENTED BY DATA FROM 19 STATES FOR LOW VOLUME DRGS.
** DRGS 469 AND 470 CONTAIN CASES WHICH COULD NOT BE ASSIGNED TO VALID DRGS.
NOTE: GEOMETRIC MEAN IS USED ONLY TO DETERMINE PAYMENT FOR TRANSFER CASES.
NOTE: ARITHMETIC MEAN IS USED ONLY TO DETERMINE PAYMENT FOR OUTLIER CASES.
NOTE: RELATIVE WEIGHTS ARE BASED ON MEDICARE PATIENT DATA AND MAY NOT BE APPROPRIATE FOR OTHER PATIENTS.

TABLE 5

LIST OF DIAGNOSIS RELATED GROUPS (DRGS), RELATIVE WEIGHTING FACTORS, GEOMETRIC MEAN LENGTH OF STAY, AND LENGTH OF STAY OUTLIER CUTOFF POINTS USED IN THE PROSPECTIVE PAYMENT SYSTEM

				RELATIVE WEIGHTS	GEOMETRIC MEAN LOS	ARITHMETIC MEAN LOS	OUTLIER THRESHOLD
281	09	MED	TRAUMA TO THE SKIN, SUBCUT TISS & BREAST AGE >17 W/O CC	.4428	2.8	3.9	26
282	09	MED	* TRAUMA TO THE SKIN, SUBCUT TISS & BREAST AGE 0-17	.2458	1.6	2.1	25
283	09	MED	MINOR SKIN DISORDERS W CC	.7148	4.4	5.9	27
284	09	MED	MINOR SKIN DISORDERS W/O CC	.4259	3.1	4.1	26
285	10	SURG	AMPUTAT OF LOWER LIMB FOR ENDOCRINE,NUTRIT,& METABOL DISORDERS	2.4005	11.0	15.4	34
286	10	SURG	ADRENAL & PITUITARY PROCEDURES	2.3216	6.9	9.0	30
287	10	SURG	SKIN GRAFTS & WOUND DEBRID FOR ENDOC, NUTRIT & METAB DISORDERS	2.1186	10.7	15.5	34
288	10	SURG	O.R. PROCEDURES FOR OBESITY	2.0787	5.9	8.1	29
289	10	SURG	PARATHYROID PROCEDURES	1.0420	3.0	4.5	26
290	10	SURG	THYROID PROCEDURES	.8514	2.3	3.0	16
291	10	SURG	THYROGLOSSAL PROCEDURES	.4750	1.4	1.6	6
292	10	SURG	OTHER ENDOCRINE, NUTRIT & METAB O.R. PROC W CC	2.6385	9.2	13.5	32
293	10	SURG	OTHER ENDOCRINE, NUTRIT & METAB O.R. PROC W/O CC	1.1596	4.5	6.3	27
294	10	MED	DIABETES AGE >35	.7589	4.7	6.2	28
295	10	MED	DIABETES AGE 0-35	.7539	3.7	5.1	27
296	10	MED	NUTRITIONAL & MISC METABOLIC DISORDERS AGE >17 W CC	.9151	5.1	7.0	28
297	10	MED	NUTRITIONAL & MISC METABOLIC DISORDERS AGE >17 W/O CC	.5346	3.5	4.6	27
298	10	MED	NUTRITIONAL & MISC METABOLIC DISORDERS AGE 0-17	.4501	2.4	3.3	20
299	10	MED	INBORN ERRORS OF METABOLISM	.9847	4.2	6.2	27
300	10	MED	ENDOCRINE DISORDERS W CC	1.0852	5.8	7.8	29
301	10	MED	ENDOCRINE DISORDERS W/O CC	.5817	3.5	4.6	26
302	11	SURG	KIDNEY TRANSPLANT	4.1718	11.9	14.0	35
303	11	SURG	KIDNEY,URETER & MAJOR BLADDER PROCEDURES FOR NEOPLASM	2.6195	9.1	11.0	32
304	11	SURG	KIDNEY,URETER & MAJOR BLADDER PROC FOR NON-NEOPL W CC	2.3630	8.1	11.0	31
305	11	SURG	KIDNEY,URETER & MAJOR BLADDER PROC FOR NON-NEOPL W/O CC	1.1329	4.0	5.2	27
306	11	SURG	PROSTATECTOMY W CC	1.2398	4.9	7.1	28
307	11	SURG	PROSTATECTOMY W/O CC	.6500	2.6	3.2	16
308	11	SURG	MINOR BLADDER PROCEDURES W CC	1.4798	5.0	7.5	28
309	11	SURG	MINOR BLADDER PROCEDURES W/O CC	.7975	2.4	3.2	20
310	11	SURG	TRANSURETHRAL PROCEDURES W CC	.9682	3.3	4.9	26
311	11	SURG	TRANSURETHRAL PROCEDURES W/O CC	.5422	1.9	2.3	12
312	11	SURG	URETHRAL PROCEDURES, AGE >17 W CC	.8902	3.3	5.1	26
313	11	SURG	URETHRAL PROCEDURES, AGE >17 W/O CC	.4940	1.9	2.5	15
314	11	SURG	* URETHRAL PROCEDURES, AGE 0-17	.4728	2.6	4.0	26
315	11	SURG	OTHER KIDNEY & URINARY TRACT O.R. PROCEDURES	2.0723	5.7	10.3	29

* MEDICARE DATA HAVE BEEN SUPPLEMENTED BY DATA FROM 19 STATES FOR LOW VOLUME DRGS.
** DRGS 469 AND 470 CONTAIN CASES WHICH COULD NOT BE ASSIGNED TO VALID DRGS.
NOTE: GEOMETRIC MEAN IS USED ONLY TO DETERMINE PAYMENT FOR TRANSFER CASES.
NOTE: ARITHMETIC MEAN IS USED ONLY TO DETERMINE PAYMENT FOR OUTLIER CASES.
NOTE: RELATIVE WEIGHTS ARE BASED ON MEDICARE PATIENT DATA AND MAY NOT BE APPROPRIATE FOR OTHER PATIENTS.

TABLE 5

LIST OF DIAGNOSIS RELATED GROUPS (DRGS), RELATIVE WEIGHTING FACTORS, GEOMETRIC MEAN LENGTH OF STAY, AND LENGTH OF STAY OUTLIER CUTOFF POINTS USED IN THE PROSPECTIVE PAYMENT SYSTEM

				RELATIVE WEIGHTS	GEOMETRIC MEAN LOS	ARITHMETIC MEAN LOS	OUTLIER THRESHOLD
316	11	MED	RENAL FAILURE	1.3035	5.7	8.1	29
317	11	MED	ADMIT FOR RENAL DIALYSIS	.6404	2.6	4.0	26
318	11	MED	KIDNEY & URINARY TRACT NEOPLASMS W CC	1.0948	5.2	7.6	28
319	11	MED	KIDNEY & URINARY TRACT NEOPLASMS W/O CC	.5414	2.2	3.4	25
320	11	MED	KIDNEY & URINARY TRACT INFECTIONS AGE >17 W CC	.9275	5.6	7.0	29
321	11	MED	KIDNEY & URINARY TRACT INFECTIONS AGE >17 W/O CC	.5904	4.1	4.9	25
322	11	MED	KIDNEY & URINARY TRACT INFECTIONS AGE 0-17	.6072	3.6	5.1	27
323	11	MED	URINARY STONES W CC, &/OR ESW LITHOTRIPSY	.7238	2.8	3.8	26
324	11	MED	URINARY STONES W/O CC	.3955	1.8	2.2	11
325	11	MED	KIDNEY & URINARY TRACT SIGNS & SYMPTOMS AGE >17 W CC	.6417	3.7	4.9	27
326	11	MED	KIDNEY & URINARY TRACT SIGNS & SYMPTOMS AGE >17 W/O CC	.4171	2.6	3.3	21
327	11	MED	* KIDNEY & URINARY TRACT SIGNS & SYMPTOMS AGE 0-17	.2294	2.0	2.5	25
328	11	MED	URETHRAL STRICTURE AGE >17 W CC	.6691	3.2	4.4	26
329	11	MED	URETHRAL STRICTURE AGE >17 W/O CC	.4280	1.8	2.3	13
330	11	MED	* URETHRAL STRICTURE AGE 0-17	.3052	2.2	3.1	25
331	11	MED	OTHER KIDNEY & URINARY TRACT DIAGNOSES AGE >17 W CC	1.0107	4.9	6.8	28
332	11	MED	OTHER KIDNEY & URINARY TRACT DIAGNOSES AGE >17 W/O CC	.6003	3.0	4.1	26
333	11	MED	OTHER KIDNEY & URINARY TRACT DIAGNOSES AGE 0-17	.8653	4.2	6.0	27
334	12	SURG	MAJOR MALE PELVIC PROCEDURES W CC	1.6889	6.1	6.9	24
335	12	SURG	MAJOR MALE PELVIC PROCEDURES W/O CC	1.2884	4.8	5.2	20
336	12	SURG	TRANSURETHRAL PROSTATECTOMY W CC	.8777	3.6	4.6	25
337	12	SURG	TRANSURETHRAL PROSTATECTOMY W/O CC	.6095	2.6	3.0	12
338	12	SURG	TESTES PROCEDURES, FOR MALIGNANCY	1.0240	3.7	5.6	27
339	12	SURG	TESTES PROCEDURES, NON-MALIGNANCY AGE >17	.9345	3.1	4.7	26
340	12	SURG	* TESTES PROCEDURES, NON-MALIGNANCY AGE 0-17	.2713	1.3	1.5	24
341	12	SURG	PENIS PROCEDURES	1.0694	2.6	3.7	24
342	12	SURG	CIRCUMCISION AGE >17	.7304	2.7	4.1	26
343	12	SURG	* CIRCUMCISION AGE 0-17	.1474	1.3	1.6	24
344	12	SURG	OTHER MALE REPRODUCTIVE SYSTEM O.R. PROCEDURES FOR MALIGNANCY	1.0254	2.4	3.5	25
345	12	SURG	OTHER MALE REPRODUCTIVE SYSTEM O.R. PROC EXCEPT FOR MALIGNANCY	.8431	3.0	4.6	26
346	12	MED	MALIGNANCY, MALE REPRODUCTIVE SYSTEM, W CC	.9628	5.1	7.5	28
347	12	MED	MALIGNANCY, MALE REPRODUCTIVE SYSTEM, W/O CC	.4868	2.5	3.5	25
348	12	MED	BENIGN PROSTATIC HYPERTROPHY W CC	.7103	3.8	5.3	27
349	12	MED	BENIGN PROSTATIC HYPERTROPHY W/O CC	.4214	2.3	3.1	21
350	12	MED	INFLAMMATION OF THE MALE REPRODUCTIVE SYSTEM	.6805	4.3	5.2	27

* MEDICARE DATA HAVE BEEN SUPPLEMENTED BY DATA FROM 19 STATES FOR LOW VOLUME DRGS.
** DRGS 469 AND 470 CONTAIN CASES WHICH COULD NOT BE ASSIGNED TO VALID DRGS.
NOTE: GEOMETRIC MEAN IS USED ONLY TO DETERMINE PAYMENT FOR TRANSFER CASES.
NOTE: ARITHMETIC MEAN IS USED ONLY TO DETERMINE PAYMENT FOR OUTLIER CASES.
NOTE: RELATIVE WEIGHTS ARE BASED ON MEDICARE PATIENT DATA AND MAY NOT BE APPROPRIATE FOR OTHER PATIENTS.

TABLE 5

LIST OF DIAGNOSIS RELATED GROUPS (DRGS), RELATIVE WEIGHTING FACTORS, GEOMETRIC MEAN LENGTH OF STAY, AND LENGTH OF STAY OUTLIER CUTOFF POINTS USED IN THE PROSPECTIVE PAYMENT SYSTEM

				RELATIVE WEIGHTS	GEOMETRIC MEAN LOS	ARITHMETIC MEAN LOS	OUTLIER THRESHOLD
351	12	MED	* STERILIZATION, MALE	.2262	1.1	1.1	24
352	12	MED	OTHER MALE REPRODUCTIVE SYSTEM DIAGNOSES	.5963	3.1	4.3	26
353	13	SURG	PELVIC EVISCERATION, RADICAL HYSTERECTOMY & RADICAL VULVECTOMY	1.9542	7.5	9.4	30
354	13	SURG	UTERINE,ADNEXA PROC FOR NON-OVARIAN/ADNEXAL MALIG W CC	1.4527	5.6	6.8	29
355	13	SURG	UTERINE,ADNEXA PROC FOR NON-OVARIAN/ADNEXAL MALIG W/O CC	.8718	3.7	4.0	11
356	13	SURG	FEMALE REPRODUCTIVE SYSTEM RECONSTRUCTIVE PROCEDURES	.7308	2.9	3.3	13
357	13	SURG	UTERINE & ADNEXA PROC FOR OVARIAN OR ADNEXAL MALIGNANCY	2.3719	8.5	10.6	31
358	13	SURG	UTERINE & ADNEXA PROC FOR NON-MALIGNANCY W CC	1.1369	4.3	5.0	20
359	13	SURG	UTERINE & ADNEXA PROC FOR NON-MALIGNANCY W/O CC	.7986	3.2	3.5	10
360	13	SURG	VAGINA, CERVIX & VULVA PROCEDURES	.8749	3.3	4.2	23
361	13	SURG	LAPAROSCOPY & INCISIONAL TUBAL INTERRUPTION	1.1947	3.1	5.0	26
362	13	SURG	* ENDOSCOPIC TUBAL INTERRUPTION	.2891	1.3	1.7	24
363	13	SURG	D&C, CONIZATION & RADIO-IMPLANT, FOR MALIGNANCY	.6880	2.7	3.7	22
364	13	SURG	D&C, CONIZATION EXCEPT FOR MALIGNANCY	.6745	2.7	3.8	26
365	13	SURG	OTHER FEMALE REPRODUCTIVE SYSTEM O.R. PROCEDURES	1.7643	5.9	8.6	29
366	13	MED	MALIGNANCY, FEMALE REPRODUCTIVE SYSTEM W CC	1.1335	5.5	8.2	28
367	13	MED	MALIGNANCY, FEMALE REPRODUCTIVE SYSTEM W/O CC	.5006	2.4	3.6	25
368	13	MED	INFECTIONS, FEMALE REPRODUCTIVE SYSTEM	.9874	5.6	7.2	29
369	13	MED	MENSTRUAL & OTHER FEMALE REPRODUCTIVE SYSTEM DISORDERS	.5125	2.7	3.9	26
370	14	SURG	CESAREAN SECTION W CC	.9603	4.5	5.7	26
371	14	SURG	CESAREAN SECTION W/O CC	.6530	3.4	3.8	11
372	14	MED	VAGINAL DELIVERY W COMPLICATING DIAGNOSES	.5609	2.6	3.6	21
373	14	MED	VAGINAL DELIVERY W/O COMPLICATING DIAGNOSES	.3442	1.8	2.1	8
374	14	SURG	VAGINAL DELIVERY W STERILIZATION &/OR D&C	.6801	2.4	2.9	13
375	14	SURG	* VAGINAL DELIVERY W O.R. PROC EXCEPT STERIL &/OR D&C	.6564	2.9	4.2	26
376	14	MED	POSTPARTUM & POST ABORTION DIAGNOSES W/O O.R. PROCEDURE	.4473	2.5	3.7	26
377	14	SURG	POSTPARTUM & POST ABORTION DIAGNOSES W O.R. PROCEDURE	.8006	2.7	4.2	26
378	14	MED	ECTOPIC PREGNANCY	.7375	2.4	2.8	14
379	14	MED	THREATENED ABORTION	.4004	2.2	3.4	25
380	14	MED	ABORTION W/O D&C	.3789	1.6	2.0	9
381	14	SURG	ABORTION W D&C, ASPIRATION CURETTAGE OR HYSTEROTOMY	.4755	1.5	2.1	11
382	14	MED	FALSE LABOR	.1908	1.2	1.8	6
383	14	MED	OTHER ANTEPARTUM DIAGNOSES W MEDICAL COMPLICATIONS	.4611	3.1	4.4	26
384	14	MED	OTHER ANTEPARTUM DIAGNOSES W/O MEDICAL COMPLICATIONS	.2794	1.6	2.0	10
385	15		* NEONATES, DIED OR TRANSFERRED TO ANOTHER ACUTE CARE FACILITY	1.3280	2.5	8.0	26

* MEDICARE DATA HAVE BEEN SUPPLEMENTED BY DATA FROM 19 STATES FOR LOW VOLUME DRGS.
** DRGS 469 AND 470 CONTAIN CASES WHICH COULD NOT BE ASSIGNED TO VALID DRGS.
NOTE: GEOMETRIC MEAN IS USED ONLY TO DETERMINE PAYMENT FOR TRANSFER CASES.
NOTE: ARITHMETIC MEAN IS USED ONLY TO DETERMINE PAYMENT FOR OUTLIER CASES.
NOTE: RELATIVE WEIGHTS ARE BASED ON MEDICARE PATIENT DATA AND MAY NOT BE APPROPRIATE FOR OTHER PATIENTS.

TABLE 5

LIST OF DIAGNOSIS RELATED GROUPS (DRGS), RELATIVE WEIGHTING FACTORS, GEOMETRIC MEAN LENGTH OF STAY, AND LENGTH OF STAY OUTLIER CUTOFF POINTS USED IN THE PROSPECTIVE PAYMENT SYSTEM

				RELATIVE WEIGHTS	GEOMETRIC MEAN LOS	ARITHMETIC MEAN LOS	OUTLIER THRESHOLD
386	15		* EXTREME IMMATURITY OR RESPIRATORY DISTRESS SYNDROME, NEONATE	4.3433	18.0	31.7	41
387	15		* PREMATURITY W MAJOR PROBLEMS	2.9664	13.7	24.6	37
388	15		* PREMATURITY W/O MAJOR PROBLEMS	1.7898	13.1	18.7	36
389	15		FULL TERM NEONATE W MAJOR PROBLEMS	2.3121	7.7	10.3	31
390	15		NEONATE W OTHER SIGNIFICANT PROBLEMS	.6328	2.7	4.5	26
391	15		* NORMAL NEWBORN	.1460	2.2	3.0	25
392	16	SURG	SPLENECTOMY AGE >17	3.1982	9.3	12.0	32
393	16	SURG	* SPLENECTOMY AGE 0-17	1.2902	6.2	7.5	29
394	16	SURG	OTHER O.R. PROCEDURES OF THE BLOOD AND BLOOD FORMING ORGANS	1.6316	4.9	8.5	28
395	16	MED	RED BLOOD CELL DISORDERS AGE >17	.8359	4.1	5.8	27
396	16	MED	RED BLOOD CELL DISORDERS AGE 0-17	.5915	2.6	3.9	26
397	16	MED	COAGULATION DISORDERS	1.2842	4.8	6.6	28
398	16	MED	RETICULOENDOTHELIAL & IMMUNITY DISORDERS W CC	1.2267	5.6	7.1	29
399	16	MED	RETICULOENDOTHELIAL & IMMUNITY DISORDERS W/O CC	.6862	3.7	4.7	27
400	17	SURG	LYMPHOMA & LEUKEMIA W MAJOR O.R. PROCEDURE	2.6120	7.2	11.2	30
401	17	SURG	LYMPHOMA & NON-ACUTE LEUKEMIA W OTHER O.R. PROC W CC	2.4391	9.0	13.0	32
402	17	SURG	LYMPHOMA & NON-ACUTE LEUKEMIA W OTHER O.R. PROC W/O CC	.9106	3.0	4.4	26
403	17	MED	LYMPHOMA & NON-ACUTE LEUKEMIA W CC	1.6740	6.9	9.9	30
404	17	MED	LYMPHOMA & NON-ACUTE LEUKEMIA W/O CC	.7738	3.6	5.1	27
405	17		* ACUTE LEUKEMIA W/O MAJOR O.R. PROCEDURE AGE 0-17	1.8291	6.1	10.7	29
406	17	SURG	MYELOPROLIF DISORD OR POORLY DIFF NEOPL W MAJ O.R.PROC W CC	2.6404	8.5	11.9	31
407	17	SURG	MYELOPROLIF DISORD OR POORLY DIFF NEOPL W MAJ O.R.PROC W/O CC	1.1287	3.9	5.0	27
408	17	SURG	MYELOPROLIF DISORD OR POORLY DIFF NEOPL W OTHER O.R.PROC	1.6865	5.1	8.8	28
409	17	MED	RADIOTHERAPY	.9469	4.9	7.0	28
410	17	MED	CHEMOTHERAPY W/O ACUTE LEUKEMIA AS SECONDARY DIAGNOSIS	.7183	2.6	3.3	20
411	17	MED	HISTORY OF MALIGNANCY W/O ENDOSCOPY	.5035	2.5	3.4	25
412	17	MED	HISTORY OF MALIGNANCY W ENDOSCOPY	.4515	2.1	3.0	24
413	17	MED	OTHER MYELOPROLIF DIS OR POORLY DIFF NEOPL DIAG W CC	1.3366	6.4	9.2	29
414	17	MED	OTHER MYELOPROLIF DIS OR POORLY DIFF NEOPL DIAG W/O CC	.6983	3.7	5.6	27
415	18	SURG	O.R. PROCEDURE FOR INFECTIOUS & PARASITIC DISEASES	3.4709	12.4	17.2	35
416	18	MED	SEPTICEMIA AGE >17	1.4761	6.5	8.9	30
417	18	MED	SEPTICEMIA AGE 0-17	.9963	5.0	6.3	28
418	18	MED	POSTOPERATIVE & POST-TRAUMATIC INFECTIONS	.9727	5.7	7.3	29
419	18	MED	FEVER OF UNKNOWN ORIGIN AGE >17 W CC	.9183	4.8	6.2	28
420	18	MED	FEVER OF UNKNOWN ORIGIN AGE >17 W/O CC	.6175	3.7	4.6	25

* MEDICARE DATA HAVE BEEN SUPPLEMENTED BY DATA FROM 19 STATES FOR LOW VOLUME DRGS.
** DRGS 469 AND 470 CONTAIN CASES WHICH COULD NOT BE ASSIGNED TO VALID DRGS.
NOTE: GEOMETRIC MEAN IS USED ONLY TO DETERMINE PAYMENT FOR TRANSFER CASES.
NOTE: ARITHMETIC MEAN IS USED ONLY TO DETERMINE PAYMENT FOR OUTLIER CASES.
NOTE: RELATIVE WEIGHTS ARE BASED ON MEDICARE PATIENT DATA AND MAY NOT BE APPROPRIATE FOR OTHER PATIENTS.

TABLE 5

LIST OF DIAGNOSIS RELATED GROUPS (DRGS), RELATIVE WEIGHTING FACTORS, GEOMETRIC MEAN LENGTH OF STAY, AND LENGTH OF STAY OUTLIER CUTOFF POINTS USED IN THE PROSPECTIVE PAYMENT SYSTEM

				RELATIVE WEIGHTS	GEOMETRIC MEAN LOS	ARITHMETIC MEAN LOS	OUTLIER THRESHOLD
421	18	MED	VIRAL ILLNESS AGE >17	.6955	3.8	4.9	27
422	18	MED	VIRAL ILLNESS & FEVER OF UNKNOWN ORIGIN AGE 0-17	.5602	3.4	4.5	26
423	18	MED	OTHER INFECTIOUS & PARASITIC DISEASES DIAGNOSES	1.5799	6.7	9.3	30
424	19	SURG	O.R. PROCEDURE W PRINCIPAL DIAGNOSES OF MENTAL ILLNESS	2.4454	12.3	19.8	35
425	19	MED	ACUTE ADJUST REACT & DISTURBANCES OF PSYCHOSOCIAL DYSFUNCTION	.7126	3.9	5.5	27
426	19	MED	DEPRESSIVE NEUROSES	.6003	4.5	6.4	28
427	19	MED	NEUROSES EXCEPT DEPRESSIVE	.5911	4.2	6.0	27
428	19	MED	DISORDERS OF PERSONALITY & IMPULSE CONTROL	.7026	5.2	8.2	28
429	19	MED	ORGANIC DISTURBANCES & MENTAL RETARDATION	.9555	6.7	10.4	30
430	19	MED	PSYCHOSES	.8886	7.6	10.9	31
431	19	MED	CHILDHOOD MENTAL DISORDERS	.6306	5.3	7.6	28
432	19	MED	OTHER MENTAL DISORDER DIAGNOSES	.7196	4.4	6.9	27
433	20		ALCOHOL/DRUG ABUSE OR DEPENDENCE, LEFT AMA	.3086	2.6	3.7	26
434	20		ALC/DRUG ABUSE OR DEPEND, DETOX OR OTH SYMPT TREAT W CC	.7328	4.7	6.4	28
435	20		ALC/DRUG ABUSE OR DEPEND, DETOX OR OTH SYMPT TREAT W/O CC	.4157	3.9	5.1	27
436	20		ALC/DRUG DEPENDENCE W REHABILITATION THERAPY	.8457	12.7	15.7	36
437	20		ALC/DRUG DEPENDENCE, COMBINED REHAB & DETOX THERAPY	.7956	9.9	11.8	33
438			NO LONGER VALID	.0000	.0	.0	0
439	21	SURG	SKIN GRAFTS FOR INJURIES	1.6606	5.6	9.2	29
440	21	SURG	WOUND DEBRIDEMENTS FOR INJURIES	1.7738	7.0	10.9	30
441	21	SURG	HAND PROCEDURES FOR INJURIES	.8443	2.3	3.6	25
442	21	SURG	OTHER O.R. PROCEDURES FOR INJURIES W CC	2.0734	5.7	9.0	29
443	21	SURG	OTHER O.R. PROCEDURES FOR INJURIES W/O CC	.7918	2.4	3.3	25
444	21	MED	TRAUMATIC INJURY AGE >17 W CC	.7192	4.4	5.8	27
445	21	MED	TRAUMATIC INJURY AGE >17 W/O CC	.4594	2.9	3.9	26
446	21	MED	* TRAUMATIC INJURY AGE 0-17	.2836	2.1	2.9	25
447	21	MED	ALLERGIC REACTIONS AGE >17	.4943	2.3	3.0	20
448	21	MED	ALLERGIC REACTIONS AGE 0-17	.0747	1.0	1.0	1
449	21	MED	POISONING & TOXIC EFFECTS OF DRUGS AGE >17 W CC	.7907	3.3	4.8	26
450	21	MED	POISONING & TOXIC EFFECTS OF DRUGS AGE >17 W/O CC	.4232	1.9	2.5	15
451	21	MED	* POISONING & TOXIC EFFECTS OF DRUGS AGE 0-17	.2518	1.8	2.4	25
452	21	MED	COMPLICATIONS OF TREATMENT W CC	.9129	3.9	5.6	27
453	21	MED	COMPLICATIONS OF TREATMENT W/O CC	.4568	2.5	3.4	23
454	21	MED	OTHER INJURY, POISONING & TOXIC EFFECT DIAG W CC	.8882	3.8	6.0	27
455	21	MED	OTHER INJURY, POISONING & TOXIC EFFECT DIAG W/O CC	.4547	2.3	3.5	25

* MEDICARE DATA HAVE BEEN SUPPLEMENTED BY DATA FROM 19 STATES FOR LOW VOLUME DRGS.
** DRGS 469 AND 470 CONTAIN CASES WHICH COULD NOT BE ASSIGNED TO VALID DRGS.
NOTE: GEOMETRIC MEAN IS USED ONLY TO DETERMINE PAYMENT FOR TRANSFER CASES.
NOTE: ARITHMETIC MEAN IS USED ONLY TO DETERMINE PAYMENT FOR OUTLIER CASES.
NOTE: RELATIVE WEIGHTS ARE BASED ON MEDICARE PATIENT DATA AND MAY NOT BE APPROPRIATE FOR OTHER PATIENTS.

TABLE 5

LIST OF DIAGNOSIS RELATED GROUPS (DRGS), RELATIVE WEIGHTING FACTORS, GEOMETRIC MEAN LENGTH OF STAY, AND LENGTH OF STAY OUTLIER CUTOFF POINTS USED IN THE PROSPECTIVE PAYMENT SYSTEM

				RELATIVE WEIGHTS	GEOMETRIC MEAN LOS	ARITHMETIC MEAN LOS	OUTLIER THRESHOLD
456	22		BURNS, TRANSFERRED TO ANOTHER ACUTE CARE FACILITY	1.9675	4.3	8.2	27
457	22	MED	EXTENSIVE BURNS W/O O.R. PROCEDURE	1.6966	2.6	5.2	26
458	22	SURG	NON-EXTENSIVE BURNS W SKIN GRAFT	3.4865	12.8	18.4	36
459	22	SURG	NON-EXTENSIVE BURNS W WOUND DEBRIDEMENT OR OTHER O.R. PROC	1.9689	8.2	13.3	31
460	22	MED	NON-EXTENSIVE BURNS W/O O.R. PROCEDURE	.9336	5.1	7.3	28
461	23	SURG	O.R. PROC W DIAGNOSES OF OTHER CONTACT W HEALTH SERVICES	1.0447	2.6	5.7	26
462	23	MED	REHABILITATION	1.5295	12.1	15.1	35
463	23	MED	SIGNS & SYMPTOMS W CC	.7379	4.2	5.8	27
464	23	MED	SIGNS & SYMPTOMS W/O CC	.4824	3.0	3.9	26
465	23	MED	AFTERCARE W HISTORY OF MALIGNANCY AS SECONDARY DIAGNOSIS	.4328	1.9	2.9	20
466	23	MED	AFTERCARE W/O HISTORY OF MALIGNANCY AS SECONDARY DIAGNOSIS	.5632	2.5	4.5	25
467	23	MED	OTHER FACTORS INFLUENCING HEALTH STATUS	.4264	2.5	4.9	26
468			EXTENSIVE O.R. PROCEDURE UNRELATED TO PRINCIPAL DIAGNOSIS	3.5224	11.3	16.3	34
469		**	PRINCIPAL DIAGNOSIS INVALID AS DISCHARGE DIAGNOSIS	.0000	.0	.0	0
470		**	UNGROUPABLE	.0000	.0	.0	0
471	08	SURG	BILATERAL OR MULTIPLE MAJOR JOINT PROCS OF LOWER EXTREMITY	3.6449	8.0	9.6	31
472	22	SURG	EXTENSIVE BURNS W O.R. PROCEDURE	10.5483	14.0	30.8	37
473	17		ACUTE LEUKEMIA W/O MAJOR O.R. PROCEDURE AGE >17	3.4948	8.9	15.3	32
474			NO LONGER VALID	.0000	.0	.0	0
475	04	MED	RESPIRATORY SYSTEM DIAGNOSIS WITH VENTILATOR SUPPORT	3.6911	9.1	13.0	32
476		SURG	PROSTATIC O.R. PROCEDURE UNRELATED TO PRINCIPAL DIAGNOSIS	2.2716	11.5	15.1	35
477		SURG	NON-EXTENSIVE O.R. PROCEDURE UNRELATED TO PRINCIPAL DIAGNOSIS	1.5704	5.8	9.4	29
478	05	SURG	OTHER VASCULAR PROCEDURES W CC	2.2744	6.0	9.0	29
479	05	SURG	OTHER VASCULAR PROCEDURES W/O CC	1.3564	3.6	4.9	27
480		SURG	LIVER TRANSPLANT	16.6079	23.7	32.4	47
481		SURG	BONE MARROW TRANSPLANT	11.1157	26.6	30.3	50
482		SURG	TRACHEOSTOMY FOR FACE,MOUTH & NECK DIAGNOSES	3.6726	12.5	16.3	35
483		SURG	TRACHEOSTOMY EXCEPT FOR FACE,MOUTH & NECK DIAGNOSES	16.1256	38.1	49.5	61
484	24	SURG	CRANIOTOMY FOR MULTIPLE SIGNIFICANT TRAUMA	5.3868	11.1	17.2	34
485	24	SURG	LIMB REATTACHMENT, HIP AND FEMUR PROC FOR MULTIPLE SIGNIFICANT TR	3.1816	10.3	13.2	33
486	24	SURG	OTHER O.R. PROCEDURES FOR MULTIPLE SIGNIFICANT TRAUMA	4.9252	9.6	15.2	33
487	24	MED	OTHER MULTIPLE SIGNIFICANT TRAUMA	1.9541	6.8	9.9	30
488	25	SURG	HIV W EXTENSIVE O.R. PROCEDURE	4.2921	13.6	18.7	37
489	25	MED	HIV W MAJOR RELATED CONDITION	1.8054	7.8	11.7	31
490	25	MED	HIV W OR W/O OTHER RELATED CONDITION	1.0567	4.8	7.4	28

* MEDICARE DATA HAVE BEEN SUPPLEMENTED BY DATA FROM 19 STATES FOR LOW VOLUME DRGS.
** DRGS 469 AND 470 CONTAIN CASES WHICH COULD NOT BE ASSIGNED TO VALID DRGS.
NOTE: GEOMETRIC MEAN IS USED ONLY TO DETERMINE PAYMENT FOR TRANSFER CASES.
NOTE: ARITHMETIC MEAN IS USED ONLY TO DETERMINE PAYMENT FOR OUTLIER CASES.
NOTE: RELATIVE WEIGHTS ARE BASED ON MEDICARE PATIENT DATA AND MAY NOT BE APPROPRIATE FOR OTHER PATIENTS.

TABLE 5

LIST OF DIAGNOSIS RELATED GROUPS (DRGS), RELATIVE WEIGHTING FACTORS, GEOMETRIC MEAN LENGTH OF STAY, AND LENGTH OF STAY OUTLIER CUTOFF POINTS USED IN THE PROSPECTIVE PAYMENT SYSTEM

				RELATIVE WEIGHTS	GEOMETRIC MEAN LOS	ARITHMETIC MEAN LOS	OUTLIER THRESHOLD
491	08	SURG	MAJOR JOINT & LIMB REATTACHMENT PROCEDURES OF UPPER EXTREMITY	1.6102	4.0	4.8	22
492	17	MED	CHEMOTHERAPY W ACUTE LEUKEMIA AS SECONDARY DIAGNOSIS	4.1803	11.8	18.3	35
493	07	SURG	LAPAROSCOPIC CHOLECYSTECTOMY W/O C.D.E. W CC	1.6410	4.3	6.1	27
494	07	SURG	LAPAROSCOPIC CHOLECYSTECTOMY W/O C.D.E. W/O CC	.8523	1.7	2.3	13
495		SURG	LUNG TRANSPLANT	10.1175	19.1	24.2	42

* MEDICARE DATA HAVE BEEN SUPPLEMENTED BY DATA FROM 19 STATES FOR LOW VOLUME DRGS.
** DRGS 469 AND 470 CONTAIN CASES WHICH COULD NOT BE ASSIGNED TO VALID DRGS.
NOTE: GEOMETRIC MEAN IS USED ONLY TO DETERMINE PAYMENT FOR TRANSFER CASES.
NOTE: ARITHMETIC MEAN IS USED ONLY TO DETERMINE PAYMENT FOR OUTLIER CASES.
NOTE: RELATIVE WEIGHTS ARE BASED ON MEDICARE PATIENT DATA AND MAY NOT BE APPROPRIATE FOR OTHER PATIENTS.

BILLING CODE 4120-01-C

TABLE 6a.—NEW DIAGNOSIS CODES

Diagnosis code	Description	CC	MDC	DRG
005.81	Food poisoning due to Vibrio vulnificus	N	6	182, 183, 184
005.89	Other bacterial food poisoning	N	6	182, 183, 184
041.86	Helicobacter pylori (H. pylori) infection	N	18	423
079.81	Hantavirus infection	N	18	421, 422
278.00	Obesity, unspecified	N	10	296, 297, 298
278.01	Morbid obesity	N	10	296, 297, 298
415.11	Iatrogenic pulmonary embolism and infarction	Y	4	78
			15	387, 389
415.19	Other pulmonary embolism and infarction	Y	4	78
			15	387, 389
435.3	Vertebrobasilar artery syndrome	N	1	15
458.2	Iatrogenic hypotension	N	5	141, 142
569.60	Colostomy and enterostomy complication, not otherwise specified	Y	6	188, 189, 190
569.61	Infection of colostomy or enterostomy	Y	6	188, 189, 190
569.69	Other colostomy and enterostomy complication	Y	6	188, 189, 190
690.10	Seborrheic dermatitis, unspecified	N	9	283, 284
690.11	Seborrhea capitis	N	9	283, 284
690.12	Seborrheic infantile dermatitis	N	9	283, 284
690.18	Other seborrheic dermatitis	N	9	283, 284
690.8	Other erythematosquamous dermatosis	N	9	283, 284
728.86	Necrotizing fasciitis	Y	8	248
787.91	Diarrhea	N	6	182, 183, 184
787.99	Other symptoms involving digestive system	N	6	182, 183, 184
989.81	Toxic effect of asbestos	N	21	449, 450, 451
989.82	Toxic effect of latex	N	21	449, 450, 451
989.83	Toxic effect of silicone	N	21	449, 450, 451
989.84	Toxic effect of tobacco	N	21	449, 450, 451
989.89	Toxic effect of other substance, chiefly nonmedicinal as to source, not elsewhere classified.	N	21	449, 450, 451
997.00	Nervous system complication, unspecified	Y	1	34, 35
			15	387, 389
997.01	Central nervous system complication	Y	1	34, 35
			15	387, 389
997.02	Iatrogenic cerebrovascular infarction or hemorrhage	Y	1	34, 35
			15	387, 389
997.09	Other nervous system complications	Y	1	34, 35
			15	387, 389
997.91	Complications affecting other specified body systems, hypertension	N	21	452, 453
997.99	Complications affecting other specified body systems, not elsewhere classified	Y	21	452, 453
V12.50	Personal history of unspecified circulatory disease	N	23	467
V12.51	Personal history of venous thrombosis and embolism	N	23	467
V12.52	Personal history of thrombophlebitis	N	23	467
V12.59	Personal history of other diseases of circulatory system, not elsewhere classified.	N	23	467
V15.84	Personal history of exposure to asbestos	N	23	467
V15.85	Personal history of exposure to potentially hazardous body fluids	N	23	467
V15.86	Personal history of exposure to lead	N	23	467
V43.81	Larynx replacement status	N	23	467
V43.82	Breast replacement status	N	23	467
V43.89	Other organ or tissue replacement status, not elsewhere classified	N	23	467
V45.83	Breast implant removal status	N	23	467
V56.1	Fitting and adjustment of dialysis (extracorporeal) (peritoneal) catheter	N	11	317
V58.61	Long-term (current) use of anticoagulants	N	23	465, 466
V58.69	Long-term (current) use of other medications	N	23	465, 466
V58.82	Fitting and adjustment of nonvascular catheter, not elsewhere classified	N	23	465, 466
V59.01	Blood donor, whole blood	N	23	467
V59.02	Blood donor, stem cells	N	23	467
V59.09	Other blood donor	N	23	467
V59.6	Liver donor	N	7	205, 206

TABLE 6b.—NEW PROCEDURE CODES

Procedure code	Description	OR	MDC	DRG
05.25	Periarterial sympathectomy	Y	1	7, 8
			5	120
32.22	Lung volume reduction surgery	Y	4	75
33.50	Lung transplantation, not otherwise specified	Y	Pre	495
33.51	Unilateral lung transplantation	Y	Pre	495

TABLE 6b.—NEW PROCEDURE CODES—Continued

Procedure code	Description	OR	MDC	DRG
33.52	Bilateral lung transplantation	Y	Pre	495
36.06	Insertion of coronary artery stent(s)	N		
37.65	Implant of an external, pulsatile heart assist system	Y	5	110, 111
37.66	Implant of an implantable, pulsatile heart assist system	Y	5	110, 111
39.50	Angioplasty or atherectomy of non-coronary vessel	Y	1	5
			5	478, 479
			9	269, 270
			10	292, 293
			11	315
			21	442, 443
			24	486
48.36	[Endoscopic] polypectomy of rectum	N [1]	17	412
59.72	Injection of implant into urethra and/or bladder neck	N [1]	11	308, 309
			13	356
60.21	Transurethral (ultrasound) guided laser induced prostatectomy (TULIP)	Y	11	306, 307
			12	336, 337, 476
60.29	Other transurethral prostatectomy	Y	11	306, 307
			12	336, 337, 476
92.3	Stereotactic radiosurgery	([1])	1	1, 2, 3
			10	286
			17	400, 406, 407
99.00	Perioperative autologous transfusion of whole blood or blood components	N		

[1] Non-OR procedure that affects DRG assignment.

TABLE 6c.—INVALID DIAGNOSIS CODES

Diagnosis code	Description	CC	MDC	DRG
005.8	Other bacterial food poisoning	N	6	182, 183, 184
278.0	Obesity	N	10	296, 297, 298
415.1	Pulmonary embolism and infarction	Y	4	78
			15	387, 389
569.6	Colostomy and enterostomy malfunction	Y	6	188, 189, 190
690	Erythematosquamous dermatosis	N	9	283, 284
787.9	Other symptoms involving digestive system	N	6	182, 183, 184
989.8	Toxic effect of other substances, chiefly nonmedicinal as to source	N	21	449, 450, 451
997.0	Central nervous system complications	Y	1	34, 35
			15	387, 389
997.9	Complications affecting other specified body systems, not elsewhere classified	Y	21	452, 453
V12.5	Personal history of diseases of circulatory system	N	23	467
V43.8	Organ or tissue replaced by other means, not elsewhere classified	N	23	467
V59.0	Blood donor	N	23	467
33.5	Lung transplant	Y	Pre	495
39.7	Periarterial sympathectomy	Y	5	478, 479
60.2	Transurethral prostatectomy	Y	11	306, 307
			12	336, 337
			.....	476

TABLE 6e.—REVISED DIAGNOSIS CODE TITLES

Diagnosis code	Description	CC	MDC	DRG
441.00	Dissection of aorta, unspecified site	Y	5	121, 130, 131
441.01	Dissection of aorta, thoracic	Y	5	121, 130, 131
441.02	Dissection of aorta, abdominal	Y	5	121, 130, 131
441.03	Dissection of aorta, thoracoabdominal	Y	5	121, 130, 131
560.81	Intestinal or peritoneal adhesions with obstruction (postoperative) (postinfection).	Y	6	180, 181
568.0	Peritoneal adhesions (postoperative) (postinfection)	N	6	188, 189, 190
614.6	Pelvic peritoneal adhesions, female (postoperative) (postinfection)	N	13	358, 359, 369
650	Normal delivery	N	14	370, 371, 372, 373, 374, 375
780.6	Fever	N	18	419, 420, 422
997.4	Digestive system complication	Y	6	188, 189, 190
V52.4	Fitting and adjustment of breast prosthesis and implant	N	23	467
V53.5	Fitting and adjustment of other intestinal appliance	N	6	188, 189, 190

TABLE 6e.—REVISED DIAGNOSIS CODE TITLES—Continued

Diagnosis code	Description	CC	MDC	DRG
V58.81	Fitting and adjustment of vascular catheter	N	23	465, 466
V67.51	Follow-up examination following completed treatment with high-risk medications, not elsewhere classified.	N	23	467

TABLE 6f.—REVISED PROCEDURE CODE TITLES

Procedure code	Description	OR	MDC	DRG
99.02	Transfusion of previously collected autologous blood	N		

BILLING CODE 4120–01–P

TABLE 6G--ADDITIONS TO THE CC EXCLUSIONS LIST

*0011	*00843	01110	01191	01351	01622	01732	01882
00849	00849	01111	01192	01352	01623	01733	01883
*0020	*00844	01112	01193	01353	01624	01734	01884
00849	00849	01113	01194	01354	01625	01735	01885
*0029	*00845	01114	01195	01355	01626	01736	01886
00849	00849	01115	01196	01356	01630	01740	01890
*0030	*00846	01116	01200	01360	01631	01741	01891
00849	00849	01120	01201	01361	01632	01742	01892
*0049	*00847	01121	01202	01362	01633	01743	01893
00849	00849	01122	01203	01363	01634	01744	01894
*0050	*00849	01123	01204	01364	01635	01745	01895
00849	00849	01124	01205	01365	01636	01746	01896
*0051	*0085	01125	01206	01366	01640	01750	0310
00849	00849	01126	01210	01380	01641	01751	0360
*0052	*00861	01130	01211	01381	01642	01752	0361
00849	00849	01131	01212	01382	01643	01753	0362
*0060	*00862	01132	01213	01383	01644	01754	0363
00849	00849	01133	01214	01384	01645	01755	03640
*0061	*00863	01134	01215	01385	01646	01756	03641
00849	00849	01135	01216	01386	01650	01760	03642
*0062	*00864	01136	01300	01390	01651	01761	03643
00849	00849	01140	01301	01391	01652	01762	03681
*0069	*00865	01141	01302	01392	01653	01763	03682
00849	00849	01142	01303	01393	01654	01764	03689
*0071	*00866	01143	01304	01394	01655	01765	0369
00849	00849	01144	01305	01395	01656	01766	0380
*0072	*00867	01145	01306	01396	01660	01770	0381
00849	00849	01146	01310	01400	01661	01771	0382
*0073	*00869	01150	01311	01401	01662	01772	0383
00849	00849	01151	01312	01402	01663	01773	03840
*0078	*0088	01152	01313	01403	01664	01774	03841
00849	00849	01153	01314	01404	01665	01775	03842
*0079	*0090	01154	01315	01405	01666	01776	03843
00849	00849	01155	01316	01406	01670	01780	03844
*00800	*01480	01156	01320	01480	01671	01781	03849
00849	00849	01160	01321	01482	01672	01782	0388
*00801	*01481	01161	01322	01483	01673	01783	0389
00849	00849	01162	01323	01484	01674	01784	3570
*00802	*01482	01163	01324	01485	01675	01785	6800
00849	00849	01164	01325	01486	01676	01786	6801
*00803	*01483	01165	01326	01600	01690	01790	6802
00849	00849	01170	01330	01601	01691	01791	6803
*00804	*01484	01171	01331	01602	01692	01792	6804
00849	00849	01172	01332	01603	01693	01793	6805
*00809	*01485	01173	01333	01604	01694	01794	6806
00849	00849	01174	01334	01605	01695	01795	6807
*0081	*01486	01175	01335	01606	01696	01796	6808
00849	00849	01176	01336	01610	01720	01800	6809
*0082	*04186	01180	01340	01611	01721	01801	6820
00849	01100	01181	01341	01612	01722	01802	6821
*0083	01101	01182	01342	01613	01723	01803	6822
00849	01102	01183	01343	01614	01724	01804	6823
*00841	01103	01184	01344	01615	01725	01805	6825
00849	01104	01185	01345	01616	01726	01806	6826
*00842	01105	01186	01346	01620	01730	01880	6827
00849	01106	01190	01350	01621	01731	01881	6828

TABLE 6G--ADDITIONS TO THE CC EXCLUSIONS LIST

6829	0706	00849	*7283	*99709	99678	9587	99691
*07981	0709	*5564	72886	99700	99679	9954	99692
0520	0720	00849	*72881	99701	99680	99600	99693
0521	0721	*5565	7280	99702	99681	99601	99694
0527	0722	00849	72886	99709	99682	99602	99695
0528	0723	*5566	*72886	*99791	99683	99603	99696
0529	07271	00849	7280	9580	99684	99604	99699
0530	07272	*5568	72886	9581	99685	99609	99700
05310	07279	00849	*7750	9582	99686	9961	99701
05311	0728	*5569	00849	9583	99689	9962	99702
05312	*11285	00849	*7751	9584	99690	99630	99709
05313	00849	*5570	00849	9585	99691	99639	9971
05319	*129	00849	*7752	9587	99692	9964	9972
05379	00849	*5571	00849	9954	99693	99651	9973
0538	*41511	00849	*7753	99600	99694	99652	9974
05479	41511	*5579	00849	99601	99695	99653	9975
0548	41519	00849	*7754	99602	99696	99654	99762
0550	*41519	*5582	00849	99603	99699	99659	99799
0551	41511	00849	*7755	99604	99700	99660	9980
0552	41519	*5589	00849	99609	99701	99661	9981
05571	*45989	00849	*7756	9961	99702	99662	9982
05579	41511	*5641	00849	9962	99709	99663	9983
0558	41519	00849	*7757	99630	9971	99664	9984
05600	*4599	*56960	00849	99639	9972	99665	9985
05601	41511	56960	*7758	9964	9973	99666	9986
05609	41519	56961	00849	99651	9974	99667	9987
05671	*4878	56969	*7759	99652	9975	99669	99889
05679	00849	*56961	00849	99653	99762	99670	9989
0568	*5363	56960	*7775	99654	99799	99671	*99881
07020	00849	56961	00849	99659	9980	99672	99700
07021	*5368	56969	*7778	99660	9981	99673	99701
07022	00849	*56969	00849	99661	9982	99674	99702
07023	*5550	56960	*99700	99662	9983	99675	99709
07030	00849	56961	99700	99663	9984	99676	99799
07031	*5551	56969	99701	99664	9985	99677	*99889
07032	00849	*7280	99702	99665	9986	99678	99700
07033	*5552	72886	99709	99666	9987	99679	99701
07041	00849	*72811	*99701	99667	99889	99680	99702
07042	*5559	72886	99700	99669	9989	99681	99709
07043	00849	*72812	99701	99670	*99799	99682	99799
07044	*5560	72886	99702	99671	9580	99683	*9989
07049	00849	*72813	99709	99672	9581	99684	99700
07051	*5561	72886	*99702	99673	9582	99685	99701
07052	00849	*72819	99700	99674	9583	99686	99702
07053	*5562	72886	99701	99675	9584	99689	99709
07054	00849	*7282	99702	99676	9585	99690	99799
07059	*5563	72886	99709	99677			

TABLE 6H--DELETIONS TO THE CC EXCLUSIONS LIST

*2760	2768	*9970	99604	99663	99679	99696	9985
2768	*2768	9970	99609	99664	99680	99699	9986
*2761	2768	*9979	9961	99665	99681	9970	9987
2768	*2769	9580	9962	99666	99682	9971	99889
*2762	2768	9581	99630	99667	99683	9972	9989
2768	*4151	9582	99639	99669	99684	9973	*99881
*2763	4151	9583	9964	99670	99685	9974	9970
2768	*45989	9584	99651	99671	99686	9975	9979
*2764	4151	9585	99652	99672	99689	99762	*99889
2768	*4599	9587	99653	99673	99690	9979	9970
*2765	4151	9954	99654	99674	99691	9980	9979
2768	*5696	99600	99659	99675	99692	9981	*9989
*2766	5696	99601	99660	99676	99693	9982	9970
2768	*72810	99602	99661	99677	99694	9983	9979
*2767	7280	99603	99662	99678	99695	9984	

TABLE 7A - MEDICARE PROSPECTIVE PAYMENT SYSTEM
SELECTED PERCENTILE LENGTHS OF STAY
FY94 MEDPAR UPDATE 12/94 GROUPER V12.0

DRG	NUMBER DISCHARGES	ARITHMETIC MEAN LOS	10TH PERCENTILE	25TH PERCENTILE	50TH PERCENTILE	75TH PERCENTILE	90TH PERCENTILE
001	32210	12.3992	3	5	9	15	25
002	6158	12.5643	3	6	9	15	25
003	1	7.0000	7	7	7	7	7
004	5629	9.9360	2	3	7	12	20
005	68945	5.2444	2	3	4	6	10
006	493	4.0304	1	1	2	4	9
007	8103	15.1602	2	5	9	17	32
008	2120	4.1099	1	1	3	5	9
009	1706	8.1981	2	3	6	10	16
010	20251	8.7498	2	3	6	11	18
011	2957	5.1021	1	2	4	7	10
012	23638	8.5985	2	4	6	10	16
013	6209	6.8903	3	4	5	8	12
014	353378	8.1754	2	4	6	10	15
015	147787	4.9363	2	2	4	6	9
016	12112	7.4257	2	3	5	8	14
017	3245	4.1230	1	2	3	5	8
018	22156	6.8386	2	3	5	8	13
019	7222	4.5795	1	2	4	6	9
020	8192	11.2167	3	5	9	14	22
021	1160	8.6466	2	4	7	11	17
022	2992	5.1063	2	2	4	6	10
023	5939	5.5188	1	2	4	7	11
024	58040	6.3961	2	3	4	7	12
025	21770	4.0516	1	2	3	5	8
026	42	4.0000	1	2	3	4	9
027	3320	7.0413	1	1	4	8	16
028	10234	7.7332	1	3	5	9	16
029	3290	4.1933	1	2	3	5	8
031	3558	5.5809	1	2	4	6	10
032	1997	3.2108	1	1	2	4	6
034	15850	6.8466	2	3	5	8	14
035	3335	4.5556	1	2	3	6	9
036	13003	1.7173	1	1	1	2	3
037	2196	4.0974	1	1	2	5	8
038	364	2.7143	1	1	2	3	6
039	4015	1.9098	1	1	1	2	4
040	2874	3.8758	1	1	2	5	8
041	1	2.0000	2	2	2	2	2
042	9755	2.1841	1	1	1	2	4
043	126	3.7540	1	2	3	5	7
044	1710	5.8789	2	3	5	7	10
045	2532	4.3029	1	2	3	5	8
046	3278	5.9375	1	3	4	7	11
047	1422	3.9304	1	2	3	5	7
049	2270	7.0132	2	3	5	8	14
050	3704	2.3742	1	1	2	3	4
051	374	3.0080	1	1	2	3	7
052	88	3.3068	1	1	2	4	7
053	3908	3.6911	1	1	2	4	8
054	2	4.0000	1	1	7	7	7
055	2273	2.9604	1	1	1	3	7

TABLE 7A - MEDICARE PROSPECTIVE PAYMENT SYSTEM
SELECTED PERCENTILE LENGTHS OF STAY
FY94 MEDPAR UPDATE 12/94 GROUPER V12.0

DRG	NUMBER DISCHARGES	ARITHMETIC MEAN LOS	10TH PERCENTILE	25TH PERCENTILE	50TH PERCENTILE	75TH PERCENTILE	90TH PERCENTILE
056	757	3.0013	1	1	2	4	6
057	655	4.8672	1	2	3	6	12
059	109	2.9174	1	1	2	3	6
060	1	1.0000	1	1	1	1	1
061	267	5.8876	1	1	3	8	14
063	4339	4.9150	1	2	3	6	10
064	3648	8.1316	1	2	5	10	18
065	34835	3.6646	1	2	3	4	7
066	7253	3.8541	1	2	3	5	7
067	480	4.3500	1	2	3	5	8
068	15389	5.1441	2	3	4	6	9
069	4083	4.0149	2	2	3	5	7
070	18	2.7778	1	1	3	3	4
071	131	4.3282	1	2	4	6	8
072	654	4.6667	1	2	3	5	8
073	6329	5.4076	1	2	4	7	10
074	1	5.0000	5	5	5	5	5
075	38614	11.8512	4	6	9	14	23
076	39214	13.3262	3	6	10	16	25
077	2484	5.6453	1	2	4	8	12
078	27697	8.7085	4	6	8	10	14
079	201639	10.0516	3	5	8	12	18
080	8111	6.8996	2	4	6	8	12
081	3	6.0000	2	2	7	9	9
082	71343	8.4031	2	4	6	11	17
083	7337	6.8559	2	3	5	8	13
084	1505	4.2312	1	2	3	5	7
085	18333	7.7941	2	4	6	10	15
086	1362	4.5110	1	2	4	6	9
087	55899	7.2075	1	3	6	9	14
088	360405	6.5718	2	4	5	8	12
089	450024	7.5677	3	4	6	9	13
090	40132	5.3939	2	3	5	7	9
091	46	4.0217	1	2	3	4	9
092	11451	7.6767	2	4	6	9	14
093	1294	5.1847	2	3	4	7	10
094	10424	7.9988	2	4	6	10	15
095	1124	4.8194	2	3	4	6	8
096	75513	5.8801	2	3	5	7	10
097	26599	4.5076	2	3	4	6	8
098	25	5.0000	2	2	4	8	9
099	27303	3.8658	1	2	3	5	7
100	10459	2.6038	1	1	2	3	5
101	18956	5.9755	2	3	5	7	12
102	2974	3.9859	1	2	3	5	7
103	381	39.5328	10	15	26	52	83
104	21933	16.0248	7	9	14	20	28
105	19055	11.9925	6	7	9	14	21
106	91186	12.7325	7	8	11	15	21
107	59106	9.7593	5	7	8	11	15
108	6402	13.4609	5	7	11	16	25
110	58455	11.4645	3	6	9	14	22

TABLE 7A - MEDICARE PROSPECTIVE PAYMENT SYSTEM
SELECTED PERCENTILE LENGTHS OF STAY
FY94 MEDPAR UPDATE 12/94 GROUPER V12.0

DRG	NUMBER DISCHARGES	ARITHMETIC MEAN LOS	10TH PERCENTILE	25TH PERCENTILE	50TH PERCENTILE	75TH PERCENTILE	90TH PERCENTILE
111	5043	6.9794	3	5	7	8	11
112	182953	4.9694	1	2	4	7	10
113	45097	15.8566	4	7	11	19	31
114	8862	10.4306	2	4	8	13	20
115	10396	11.7740	4	7	10	14	21
116	79140	5.8942	1	2	4	7	12
117	4331	4.4659	1	2	3	5	9
118	7364	3.4184	1	1	2	4	7
119	1960	5.8774	1	1	3	7	13
120	42498	10.0766	1	3	6	13	22
121	165544	8.0294	3	5	7	10	14
122	93263	5.5228	1	3	5	7	9
123	50902	4.8905	1	1	3	6	12
124	139504	5.2208	1	2	4	7	10
125	63695	3.1756	1	1	2	4	6
126	4667	15.8357	4	7	12	20	32
127	699485	6.7120	2	3	5	8	13
128	21487	7.2158	4	5	6	8	11
129	5099	3.7250	1	1	1	4	9
130	89074	7.1211	2	4	6	9	12
131	24522	5.3972	1	3	5	7	9
132	56902	3.9359	1	2	3	5	7
133	4803	3.0860	1	1	2	4	6
134	30214	4.2249	1	2	3	5	8
135	6887	5.6075	1	2	4	7	11
136	1130	3.5920	1	2	3	4	6
137	1	19.0000	19	19	19	19	19
138	207148	4.8949	1	2	4	6	9
139	65074	3.1062	1	2	2	4	6
140	272582	3.8091	1	2	3	5	7
141	78316	4.9567	1	2	4	6	9
142	33742	3.4014	1	2	3	4	6
143	138083	2.8505	1	1	2	3	5
144	65608	6.0177	1	2	4	7	12
145	6377	3.3771	1	2	3	4	7
146	8435	11.6669	6	8	10	13	19
147	1419	7.6765	4	6	8	9	11
148	149072	14.0671	6	8	11	16	25
149	13910	7.8799	5	6	7	9	11
150	23669	12.2691	5	7	10	15	22
151	4138	6.4770	2	3	6	9	12
152	4793	9.5489	4	6	8	11	16
153	1695	6.2755	3	5	6	8	9
154	37726	15.9923	6	8	12	19	30
155	3853	6.3582	2	3	6	8	11
156	5	10.6000	3	3	8	17	18
157	12078	6.0389	1	2	4	7	12
158	5889	2.8496	1	1	2	4	6
159	18053	5.5476	1	3	4	7	10
160	10275	2.9750	1	2	2	4	6
161	16867	4.5174	1	2	3	6	9
162	9464	2.1400	1	1	2	3	4

TABLE 7A - MEDICARE PROSPECTIVE PAYMENT SYSTEM
SELECTED PERCENTILE LENGTHS OF STAY
FY94 MEDPAR UPDATE 12/94 GROUPER V12.0

DRG	NUMBER DISCHARGES	ARITHMETIC MEAN LOS	10TH PERCENTILE	25TH PERCENTILE	50TH PERCENTILE	75TH PERCENTILE	90TH PERCENTILE
163	13	5.1538	1	1	5	7	11
164	5382	9.8317	4	6	8	12	16
165	1570	5.9121	3	4	5	7	9
166	3422	6.0283	2	3	5	7	11
167	2209	3.5441	1	2	3	4	6
168	1961	5.6772	1	2	3	7	13
169	1103	2.6854	1	1	2	3	6
170	13062	13.2659	3	6	10	17	27
171	1089	5.7879	1	2	5	7	11
172	32047	8.7206	2	3	6	11	18
173	2139	4.3230	1	2	3	6	9
174	242167	5.9455	2	3	5	7	11
175	23533	3.6660	1	2	3	4	6
176	16024	6.4582	2	3	5	8	12
177	13260	5.4502	2	3	4	7	10
178	4469	3.8427	1	2	3	5	7
179	10649	7.6771	2	4	6	9	14
180	83221	6.4519	2	3	5	8	12
181	19825	3.9406	1	2	3	5	7
182	243773	5.3607	2	3	4	6	10
183	69130	3.6055	1	2	3	5	7
184	71	3.0423	1	2	2	4	6
185	3978	5.8079	1	2	4	7	12
186	4	5.7500	3	3	5	6	9
187	862	3.8074	1	1	3	5	7
188	60216	6.5003	2	3	5	8	13
189	7573	3.5726	1	1	3	5	7
190	78	6.8205	2	3	4	8	14
191	10694	17.3172	5	8	13	21	34
192	781	8.0320	2	4	7	10	15
193	9628	14.7907	6	8	12	18	26
194	841	8.1867	3	5	7	10	14
195	11258	11.1525	5	7	9	13	19
196	868	6.9505	3	4	6	9	11
197	32126	9.5755	4	5	8	11	17
198	8559	5.1541	2	3	4	6	8
199	2482	12.3767	3	6	10	16	24
200	1589	12.5620	2	4	9	16	27
201	1593	15.9780	4	7	12	20	30
202	24256	8.2786	2	4	6	10	16
203	29468	8.2068	2	3	6	10	16
204	48492	7.1438	2	3	5	8	14
205	22119	7.9531	2	3	6	10	16
206	1718	4.6676	1	2	4	6	9
207	37891	6.0711	2	3	5	8	11
208	10312	3.4110	1	2	3	4	7
209	325078	7.6475	4	5	7	9	12
210	138493	9.7631	4	6	8	11	16
211	24868	7.0990	3	5	6	8	11
212	15	4.2667	2	2	3	4	10
213	6826	10.6058	3	4	8	13	21
214	53097	7.3434	2	4	6	8	14

TABLE 7A - MEDICARE PROSPECTIVE PAYMENT SYSTEM
SELECTED PERCENTILE LENGTHS OF STAY
FY94 MEDPAR UPDATE 12/94 GROUPER V12.0

DRG	NUMBER DISCHARGES	ARITHMETIC MEAN LOS	10TH PERCENTILE	25TH PERCENTILE	50TH PERCENTILE	75TH PERCENTILE	90TH PERCENTILE
215	41073	4.1261	2	2	3	5	7
216	6714	12.1844	3	5	9	15	25
217	19093	16.9796	3	6	11	20	36
218	23698	6.8091	2	3	5	8	13
219	18715	4.0628	2	2	3	5	7
220	4	3.7500	1	1	2	3	9
221	5076	8.7639	2	4	6	10	17
222	3797	4.1675	1	2	3	5	8
223	20468	3.0493	1	1	2	3	6
224	8684	2.3814	1	1	2	3	4
225	6956	5.0608	1	2	3	6	11
226	5864	7.2121	1	2	5	9	15
227	5172	3.1495	1	1	2	4	6
228	3231	3.7493	1	1	2	4	8
229	1553	2.3973	1	1	2	3	5
230	2696	5.5438	1	2	3	6	12
231	10959	5.5229	1	2	3	6	12
232	647	4.4699	1	1	2	5	10
233	4757	9.7675	2	4	7	12	19
234	2268	4.4453	1	2	3	6	9
235	6051	7.6691	2	3	5	8	15
236	39666	6.9787	2	3	5	8	13
237	1586	4.9098	1	2	4	6	9
238	7318	11.3360	3	5	8	13	22
239	62410	8.3701	3	4	6	10	16
240	11969	7.9905	2	4	6	10	16
241	2988	4.8313	1	2	4	6	9
242	2529	8.8802	3	4	7	11	17
243	87689	6.1328	2	3	5	8	11
244	11745	6.3745	2	3	5	8	12
245	4363	4.4873	1	2	3	6	8
246	1413	4.6914	2	2	4	6	8
247	10465	4.2654	1	2	3	5	8
248	6734	5.7180	2	3	4	7	10
249	9848	4.6294	1	2	3	6	9
250	3517	5.6230	1	2	4	6	11
251	2309	3.2278	1	1	2	4	6
253	18421	6.5600	2	3	5	7	12
254	9843	4.0040	1	2	3	5	7
256	9680	4.3875	1	2	3	5	9
257	26533	3.8836	2	2	3	4	7
258	20468	2.7710	1	2	2	3	5
259	4469	4.0759	1	1	2	4	8
260	5243	1.9804	1	1	2	2	3
261	2530	2.5775	1	1	2	3	5
262	800	4.0325	1	1	2	5	9
263	30952	15.7009	4	7	11	19	31
264	3530	9.0620	3	4	7	11	18
265	4687	7.8816	1	2	5	9	17
266	2973	3.8291	1	1	3	5	8
267	252	4.5000	1	1	2	5	9
268	1148	4.3476	1	1	2	5	9

TABLE 7A - MEDICARE PROSPECTIVE PAYMENT SYSTEM
SELECTED PERCENTILE LENGTHS OF STAY
FY94 MEDPAR UPDATE 12/94 GROUPER V12.0

DRG	NUMBER DISCHARGES	ARITHMETIC MEAN LOS	10TH PERCENTILE	25TH PERCENTILE	50TH PERCENTILE	75TH PERCENTILE	90TH PERCENTILE
269	10951	9.9332	2	4	7	13	20
270	3949	3.4657	1	1	2	4	7
271	21531	9.4089	3	5	7	11	17
272	6519	8.0561	2	4	6	10	15
273	1525	5.9528	2	3	4	7	12
274	2607	8.0997	1	3	6	10	17
275	236	3.3898	1	1	2	4	8
276	932	5.2929	2	3	4	7	10
277	81902	7.2734	3	4	6	9	13
278	25360	5.4290	2	3	5	7	9
279	7	5.5714	1	2	3	4	6
280	13662	5.5282	1	2	4	7	10
281	6032	3.8984	1	2	3	5	7
282	1	18.0000	18	18	18	18	18
283	5628	5.9394	2	3	4	7	11
284	1756	4.0598	1	2	3	5	8
285	4866	15.3553	4	7	11	19	29
286	1902	8.9621	3	5	6	10	17
287	6650	15.5054	4	6	10	18	31
288	812	8.0776	3	4	6	8	14
289	5071	4.5401	1	2	3	4	10
290	8970	2.9600	1	2	2	3	5
291	83	1.6145	1	1	1	2	3
292	5246	13.7686	3	5	10	17	27
293	287	6.2718	1	2	5	8	12
294	94388	6.1464	2	3	5	7	11
295	3662	5.0459	1	2	4	6	9
296	225258	7.0066	2	3	5	8	13
297	33881	4.5968	1	2	3	5	8
298	88	3.3523	1	1	2	4	5
299	917	6.2345	1	2	4	7	12
300	13938	7.8190	2	4	6	9	15
301	1387	4.5829	1	2	4	6	8
302	7518	14.0459	6	8	11	16	25
303	18434	11.0042	5	6	9	13	20
304	13366	10.9868	3	5	8	13	22
305	2556	5.2277	1	3	4	6	9
306	12083	7.0795	2	3	5	9	15
307	2896	3.2441	1	2	3	4	5
308	9940	7.5019	1	3	5	9	16
309	3511	3.1820	1	1	2	4	6
310	31563	4.8832	1	2	3	6	10
311	11705	2.3329	1	1	2	3	4
312	2334	5.1110	1	2	3	6	11
313	972	2.5195	1	1	2	3	5
314	1	5.0000	5	5	5	5	5
315	30057	10.3051	1	2	6	13	23
316	64963	8.0010	2	3	6	10	16
317	854	4.0328	1	1	2	4	8
318	6426	7.5128	2	3	5	9	15
319	518	3.3919	1	1	2	4	7
320	178229	7.0271	3	4	5	8	13

TABLE 7A - MEDICARE PROSPECTIVE PAYMENT SYSTEM
SELECTED PERCENTILE LENGTHS OF STAY
FY94 MEDPAR UPDATE 12/94 GROUPER V12.0

DRG	NUMBER DISCHARGES	ARITHMETIC MEAN LOS	10TH PERCENTILE	25TH PERCENTILE	50TH PERCENTILE	75TH PERCENTILE	90TH PERCENTILE
321	23919	4.9319	2	3	4	6	8
322	70	5.1143	1	2	3	6	10
323	19028	3.7525	1	2	3	5	7
324	9615	2.2315	1	1	2	3	4
325	8493	4.8757	1	2	4	6	9
326	2647	3.3294	1	2	3	4	6
327	6	2.0000	1	1	2	2	4
328	893	4.4009	1	2	3	5	8
329	146	2.2945	1	1	2	3	5
331	37697	6.7524	2	3	5	8	13
332	4869	4.0766	1	2	3	5	8
333	341	5.9589	1	2	4	7	14
334	23221	6.8622	4	5	6	8	10
335	10551	5.2485	3	4	5	6	8
336	71153	4.5795	2	2	3	5	8
337	45235	2.9648	1	2	3	4	4
338	6335	5.6153	1	2	4	7	12
339	2641	4.7228	1	2	3	6	10
340	1	2.0000	2	2	2	2	2
341	7744	3.7030	1	2	3	4	7
342	230	4.1435	1	1	2	5	8
344	5275	3.4923	1	1	2	4	7
345	1670	4.5958	1	2	3	5	10
346	5861	7.4817	2	3	5	9	15
347	549	3.5137	1	1	2	4	7
348	3252	5.2638	1	2	4	6	10
349	793	3.0958	1	1	2	4	6
350	7394	5.2410	2	3	4	6	9
352	707	4.2518	1	2	3	5	9
353	2641	9.3817	4	5	7	10	17
354	10461	6.7522	3	4	5	7	12
355	5561	3.9984	3	3	4	5	6
356	36598	3.3220	2	2	3	4	5
357	6705	10.6043	4	5	8	12	19
358	27581	5.0507	3	3	4	6	8
359	26655	3.4759	2	3	3	4	5
360	9686	4.2209	2	2	3	5	7
361	554	4.9603	1	2	3	5	11
363	4934	3.7148	1	2	2	4	7
364	1902	3.8291	1	1	2	5	8
365	2557	8.6394	2	3	6	11	18
366	4749	8.1093	2	3	6	10	17
367	581	3.5473	1	1	2	4	8
368	2156	7.1577	2	3	6	9	14
369	2432	3.8919	1	1	3	5	8
370	1004	5.6882	3	3	4	6	10
371	971	3.7508	2	3	3	4	5
372	729	3.6406	1	2	2	3	6
373	3479	2.0969	1	1	2	2	3
374	128	2.9141	1	2	2	3	4
375	6	2.6667	1	2	3	3	3
376	194	3.7062	1	1	2	4	9

TABLE 7A - MEDICARE PROSPECTIVE PAYMENT SYSTEM
SELECTED PERCENTILE LENGTHS OF STAY
FY94 MEDPAR UPDATE 12/94 GROUPER V12.0

DRG	NUMBER DISCHARGES	ARITHMETIC MEAN LOS	10TH PERCENTILE	25TH PERCENTILE	50TH PERCENTILE	75TH PERCENTILE	90TH PERCENTILE
377	34	4.1765	1	1	2	5	10
378	188	2.8298	1	2	3	4	4
379	346	3.3584	1	1	2	4	7
380	77	1.9870	1	1	1	2	4
381	223	2.0942	1	1	1	2	4
382	59	1.8136	1	1	1	1	2
383	1243	4.3805	1	2	3	5	8
384	128	2.0313	1	1	1	2	4
385	3	5.6667	1	1	7	9	9
388	1	2.0000	2	2	2	2	2
389	27	10.3333	1	5	9	14	18
390	19	4.5263	1	2	2	3	7
392	2574	11.9841	4	6	9	15	24
393	4	10.5000	4	4	7	12	19
394	1810	8.4691	1	2	5	10	19
395	68994	5.7779	1	2	4	7	11
396	20	3.8500	1	1	2	4	8
397	13959	6.6139	2	3	5	8	13
398	17059	7.1205	2	4	6	8	13
399	1318	4.7170	1	2	4	6	8
400	7944	11.2116	2	4	8	14	25
401	6868	13.0079	3	5	10	16	27
402	1757	4.4121	1	1	3	6	10
403	34137	9.9027	2	4	7	13	21
404	3918	5.1194	1	2	4	7	10
406	3626	11.9404	3	5	9	15	24
407	794	4.9572	1	2	4	6	9
408	3343	8.8086	1	2	5	11	21
409	7009	6.9568	2	3	4	7	15
410	105626	3.3443	1	2	3	4	6
411	53	3.3585	1	1	3	5	7
412	65	2.9692	1	1	2	4	7
413	8884	9.1275	2	4	7	11	19
414	898	5.5668	1	2	4	7	11
415	38002	17.1780	4	8	13	21	34
416	182780	8.8491	2	4	7	11	17
417	32	6.2813	2	3	5	7	11
418	17046	7.2477	2	4	6	9	13
419	16750	6.1816	2	3	5	7	11
420	2890	4.5689	2	2	4	6	8
421	13329	4.8718	2	2	4	6	9
422	81	4.5062	1	2	3	6	9
423	8858	9.3477	3	4	7	11	19
424	2309	19.7774	3	7	13	24	41
425	17593	5.4691	1	2	4	7	11
426	5333	6.3244	1	3	4	8	13
427	2097	6.0367	1	2	4	8	13
428	1059	8.1926	1	3	5	10	18
429	36291	10.3884	2	4	6	11	20
430	62101	10.8276	2	4	8	14	22
431	223	7.5516	2	3	6	9	14
432	501	6.8822	1	2	4	7	14

TABLE 7A - MEDICARE PROSPECTIVE PAYMENT SYSTEM
SELECTED PERCENTILE LENGTHS OF STAY
FY94 MEDPAR UPDATE 12/94 GROUPER V12.0

DRG	NUMBER DISCHARGES	ARITHMETIC MEAN LOS	10TH PERCENTILE	25TH PERCENTILE	50TH PERCENTILE	75TH PERCENTILE	90TH PERCENTILE
433	7667	3.6939	1	1	2	4	8
434	20984	6.3469	2	3	5	7	12
435	14493	5.0896	1	3	4	6	9
436	2792	15.4925	4	9	14	21	28
437	14398	11.7395	4	7	10	14	21
439	930	9.2161	1	3	6	11	19
440	4551	10.9143	2	4	7	13	24
441	619	3.6397	1	1	2	4	7
442	13631	9.0192	1	3	6	11	19
443	3679	3.3148	1	1	2	4	7
444	3480	5.7437	2	3	4	7	11
445	1397	3.8712	1	2	3	5	7
447	3578	3.0467	1	1	2	4	6
448	20	1.0000	1	1	1	1	1
449	30245	4.8298	1	2	3	6	10
450	6446	2.5476	1	1	2	3	5
451	6	3.3333	1	1	1	5	5
452	19188	5.6252	1	2	4	7	12
453	3864	3.4035	1	1	2	4	7
454	4410	6.0145	1	2	4	7	12
455	978	3.4673	1	1	2	4	7
456	194	8.1598	1	2	4	9	20
457	148	5.1689	1	1	1	6	13
458	1688	18.3691	4	8	14	24	37
459	599	13.2654	3	5	8	14	25
460	2438	7.3048	2	3	5	9	14
461	3593	5.6691	1	1	2	5	15
462	13129	14.9254	5	7	13	20	28
463	11082	5.8217	2	3	4	7	11
464	2624	3.9177	1	2	3	5	7
465	258	2.8760	1	1	2	3	5
466	2308	4.5308	1	1	2	4	10
467	2672	4.9008	1	1	2	5	8
468	62770	16.2138	3	7	12	21	32
471	8815	9.5860	4	6	8	11	16
472	184	30.7989	1	4	22	43	72
473	8260	14.9343	2	4	8	23	36
475	88675	12.8913	2	6	10	17	25
476	7915	15.0719	4	8	12	18	27
477	33544	9.3854	1	3	6	12	19
478	117696	8.9918	2	3	7	11	19
479	16826	4.8922	1	2	4	6	9
480	283	32.3816	10	14	22	40	70
481	130	30.3308	17	22	28	37	46
482	7137	16.2091	5	8	12	19	30
483	36266	49.1117	16	25	39	60	91
484	329	17.2097	2	7	14	23	33
485	3005	13.1304	5	7	10	15	25
486	2112	15.0578	1	6	11	19	30
487	3563	9.6904	2	4	7	12	19
488	1174	18.6431	5	8	14	23	36
489	13016	11.6713	3	4	8	14	24

TABLE 7A - MEDICARE PROSPECTIVE PAYMENT SYSTEM
SELECTED PERCENTILE LENGTHS OF STAY
FY94 MEDPAR UPDATE 12/94 GROUPER V12.0

DRG	NUMBER DISCHARGES	ARITHMETIC MEAN LOS	10TH PERCENTILE	25TH PERCENTILE	50TH PERCENTILE	75TH PERCENTILE	90TH PERCENTILE
490	3903	7.4220	1	3	5	8	15
491	9200	4.7991	2	3	4	6	8
492	2057	18.3379	4	5	12	28	38
493	52801	6.1255	1	2	5	8	12
494	28671	2.3049	1	1	1	3	5
495	133	24.1579	9	14	19	27	36
	==========						
	10910656						

TABLE 7B - MEDICARE PROSPECTIVE PAYMENT SYSTEM
SELECTED PERCENTILE LENGTHS OF STAY
FY94 MEDPAR UPDATE 12/94 GROUPER V13.0

DRG	NUMBER DISCHARGES	ARITHMETIC MEAN LOS	10TH PERCENTILE	25TH PERCENTILE	50TH PERCENTILE	75TH PERCENTILE	90TH PERCENTILE
001	32210	12.3992	3	5	9	15	25
002	6158	12.5643	3	6	9	15	25
003	1	7.0000	7	7	7	7	7
004	5629	9.9360	2	3	7	12	20
005	68945	5.2444	2	3	4	6	10
006	493	4.0304	1	1	2	4	9
007	8103	15.1602	2	5	9	17	32
008	2120	4.1099	1	1	3	5	9
009	1708	8.1981	2	3	6	10	16
010	20251	8.7498	2	3	6	11	18
011	2957	5.1021	1	2	4	7	10
012	23638	8.5985	2	4	6	10	16
013	6209	6.8903	3	4	5	8	12
014	353378	8.1754	2	4	6	10	15
015	147787	4.9363	2	2	4	6	9
016	12112	7.4257	2	3	5	8	14
017	3245	4.1230	1	2	3	5	8
018	22156	6.8386	2	3	5	8	13
019	7222	4.5795	1	2	4	6	9
020	8192	11.2167	3	5	9	14	22
021	1160	8.6466	2	4	7	11	17
022	2992	5.1063	2	2	4	6	10
023	5939	5.5188	1	2	4	7	11
024	58040	6.3961	2	3	4	7	12
025	21770	4.0516	1	2	3	5	8
026	42	4.0000	1	2	3	4	9
027	3320	7.0413	1	1	4	8	16
028	10234	7.7332	1	3	5	9	16
029	3290	4.1933	1	2	3	5	8
031	3558	5.5809	1	2	4	6	10
032	1997	3.2108	1	1	2	4	6
034	15850	6.8466	2	3	5	8	14
035	3335	4.5556	1	2	3	6	9
036	13003	1.7173	1	1	1	2	3
037	2196	4.0974	1	1	2	5	8
038	364	2.7143	1	1	2	3	6
039	4015	1.9098	1	1	1	2	4
040	2874	3.8758	1	1	2	5	8
041	1	2.0000	2	2	2	2	2
042	9755	2.1841	1	1	1	2	4
043	126	3.7540	1	2	3	5	7
044	1710	5.8789	2	3	5	7	10
045	2532	4.3029	1	2	3	5	8
046	3278	5.9375	1	3	4	7	11
047	1422	3.9304	1	2	3	5	7
049	2270	7.0132	2	3	5	8	14
050	3704	2.3742	1	1	2	3	4
051	374	3.0080	1	1	2	3	7
052	88	3.3068	1	1	2	4	7
053	3908	3.6911	1	1	2	4	8
054	2	4.0000	1	1	7	7	7
055	2273	2.9604	1	1	1	3	7

TABLE 7B - MEDICARE PROSPECTIVE PAYMENT SYSTEM
SELECTED PERCENTILE LENGTHS OF STAY
FY94 MEDPAR UPDATE 12/94 GROUPER V13.0

DRG	NUMBER DISCHARGES	ARITHMETIC MEAN LOS	10TH PERCENTILE	25TH PERCENTILE	50TH PERCENTILE	75TH PERCENTILE	90TH PERCENTILE
056	757	3.0013	1	1	2	4	6
057	655	4.8672	1	2	3	6	12
059	109	2.9174	1	1	2	3	6
060	1	1.0000	1	1	1	1	1
061	267	5.8876	1	1	3	8	14
063	4339	4.9150	1	2	3	6	10
064	3648	8.1316	1	2	5	10	18
065	34835	3.6646	1	2	3	4	7
066	7253	3.8541	1	2	3	5	7
067	480	4.3500	1	2	3	5	8
068	15389	5.1441	2	3	4	6	9
069	4083	4.0149	2	2	3	5	7
070	18	2.7778	1	1	3	3	4
071	131	4.3282	1	2	4	6	8
072	654	4.6667	1	2	3	5	8
073	6329	5.4076	1	2	4	7	10
074	1	5.0000	5	5	5	5	5
075	38614	11.8512	4	6	9	14	23
076	39214	13.3262	3	6	10	16	25
077	2484	5.6453	1	2	4	8	12
078	27697	8.7085	4	6	8	10	14
079	201639	10.0516	3	5	8	12	18
080	8111	6.8996	2	4	6	8	12
081	3	6.0000	2	2	7	9	9
082	71343	8.4031	2	4	6	11	17
083	7337	6.8559	2	3	5	8	13
084	1505	4.2312	1	2	3	5	7
085	18313	7.7941	2	4	6	10	15
086	1352	4.5110	1	2	4	6	9
087	55899	7.2075	1	3	6	9	14
088	360405	6.5718	2	4	5	8	12
089	450024	7.5677	3	4	6	9	13
090	40132	5.3939	2	3	5	7	9
091	46	4.0217	1	2	3	4	9
092	11451	7.6767	2	4	6	9	14
093	1294	5.1847	2	3	4	7	10
094	10424	7.9988	2	4	6	10	15
095	1124	4.8194	2	3	4	6	8
096	75513	5.8801	2	3	5	7	10
097	28599	4.5076	2	3	4	6	8
098	25	5.0000	2	2	4	8	9
099	27303	3.8658	1	2	3	5	7
100	10459	2.6038	1	1	2	3	5
101	18956	5.9755	2	3	5	7	12
102	2974	3.9859	1	2	3	5	7
103	381	39.5328	10	15	26	52	83
104	21933	16.0248	7	9	14	20	28
105	19055	11.9925	6	7	9	14	21
106	91186	12.7325	7	8	11	15	21
107	59106	9.7593	5	7	8	11	15
108	6402	13.4609	5	7	11	16	25
110	58455	11.4645	3	6	9	14	22

TABLE 7B - MEDICARE PROSPECTIVE PAYMENT SYSTEM
SELECTED PERCENTILE LENGTHS OF STAY
FY94 MEDPAR UPDATE 12/94 GROUPER V13.0

DRG	NUMBER DISCHARGES	ARITHMETIC MEAN LOS	10TH PERCENTILE	25TH PERCENTILE	50TH PERCENTILE	75TH PERCENTILE	90TH PERCENTILE
111	5043	6.9794	3	5	7	8	11
112	182953	4.9694	1	2	4	7	10
113	45097	15.8566	4	7	11	19	31
114	8862	10.4306	2	4	8	13	20
115	10396	11.7740	4	7	10	14	21
116	79140	5.8942	1	2	4	7	12
117	4331	4.4659	1	2	3	5	9
118	7364	3.4184	1	1	2	4	7
119	1950	5.8774	1	1	3	7	13
120	42515	10.0750	1	3	6	13	22
121	165544	8.0294	3	5	7	10	14
122	93263	5.5228	1	3	5	7	9
123	50902	4.8905	1	1	3	6	12
124	139504	5.2208	1	2	4	7	10
125	63695	3.1756	1	1	2	4	6
126	4667	15.8357	4	7	12	20	32
127	699485	6.7120	2	3	5	8	13
128	21487	7.2158	4	5	6	8	11
129	5099	3.7250	1	1	1	4	9
130	89074	7.1211	2	4	6	9	12
131	24522	5.3972	1	3	5	7	9
132	56902	3.9359	1	2	3	5	7
133	4803	3.0860	1	1	2	4	6
134	30214	4.2249	1	2	3	5	8
135	6887	5.6075	1	2	4	7	11
136	1130	3.5920	1	2	3	4	6
137	1	19.0000	19	19	19	19	19
138	207048	4.8949	1	2	4	6	9
139	65874	3.1062	1	2	2	4	6
140	272582	3.8091	1	2	3	5	7
141	78316	4.9567	1	2	4	6	9
142	33742	3.4014	1	2	3	4	6
143	138083	2.8505	1	1	2	3	5
144	65608	6.0177	1	2	4	7	12
145	6377	3.3771	1	2	3	4	7
146	8435	11.6669	6	8	10	13	19
147	1419	7.6765	4	6	8	9	11
148	149072	14.0671	6	8	11	16	25
149	13910	7.8799	5	6	7	9	11
150	23669	12.2691	5	7	10	15	22
151	4138	6.4770	2	3	6	9	12
152	4793	9.5489	4	6	8	11	16
153	1695	6.2755	3	5	6	8	9
154	37726	15.9923	6	8	12	19	30
155	3853	6.3582	2	3	6	8	11
156	5	10.6000	3	3	8	17	18
157	12078	6.0389	1	2	4	7	12
158	5889	2.8496	1	1	2	4	6
159	18053	5.5478	1	3	4	7	10
160	10275	2.9750	1	2	2	4	6
161	16867	4.5174	1	2	3	6	9
162	9464	2.1400	1	1	2	3	4

TABLE 7B - MEDICARE PROSPECTIVE PAYMENT SYSTEM
SELECTED PERCENTILE LENGTHS OF STAY
FY94 MEDPAR UPDATE 12/94 GROUPER V13.0

DRG	NUMBER DISCHARGES	ARITHMETIC MEAN LOS	10TH PERCENTILE	25TH PERCENTILE	50TH PERCENTILE	75TH PERCENTILE	90TH PERCENTILE
163	13	5.1538	1	1	5	7	11
164	5382	9.8317	4	6	8	12	16
165	1570	5.9121	3	4	5	7	9
166	3422	6.0283	2	3	5	7	11
167	2209	3.5441	1	2	3	4	6
168	1961	5.6772	1	2	3	7	13
169	1103	2.6854	1	1	2	3	6
170	13082	13.2659	3	6	10	17	27
171	1089	5.7879	1	2	5	7	11
172	32047	8.7206	2	3	6	11	18
173	2139	4.3230	1	2	3	6	9
174	242167	5.9455	2	3	5	7	11
175	23533	3.6660	1	2	3	4	6
176	16024	6.4582	2	3	5	8	12
177	13260	5.4502	2	3	4	7	10
178	4469	3.8427	1	2	3	5	7
179	10649	7.6771	2	4	6	9	14
180	83221	6.4519	2	3	5	8	12
181	19825	3.9406	1	2	3	5	7
182	243773	5.3607	2	3	4	6	10
183	69130	3.6055	1	2	3	5	7
184	71	3.0423	1	2	2	4	6
185	3978	5.8079	1	2	4	7	12
186	4	5.7500	3	3	5	6	9
187	862	3.8074	1	1	3	5	7
188	60216	6.5003	2	3	5	8	13
189	7573	3.5726	1	1	3	5	7
190	78	6.8205	2	3	4	8	14
191	10694	17.3172	5	8	13	21	34
192	781	8.0320	2	4	7	10	15
193	9628	14.7907	6	8	12	18	26
194	841	8.1867	3	5	7	10	14
195	11258	11.1525	5	7	9	13	19
196	868	6.9505	3	4	6	9	11
197	32126	9.5755	4	5	8	11	17
198	8559	5.1541	2	3	4	6	8
199	2482	12.3767	3	6	10	16	24
200	1589	12.5620	2	4	9	16	27
201	1593	15.9780	4	7	12	20	30
202	24256	8.2786	2	4	6	10	16
203	29468	8.2068	2	3	6	10	16
204	48492	7.1438	2	3	5	8	14
205	22119	7.9531	2	3	6	10	16
206	1718	4.6676	1	2	4	6	9
207	37891	6.0711	2	3	5	8	11
208	10312	3.4110	1	2	3	4	7
209	325078	7.6475	4	5	7	9	12
210	138493	9.7631	4	6	8	11	16
211	24868	7.0990	3	5	6	8	11
212	15	4.2667	2	2	3	4	10
213	6826	10.6058	3	4	8	13	21
214	53097	7.3434	2	4	6	8	14

TABLE 7B - MEDICARE PROSPECTIVE PAYMENT SYSTEM
SELECTED PERCENTILE LENGTHS OF STAY
FY94 MEDPAR UPDATE 12/94 GROUPER V13.0

DRG	NUMBER DISCHARGES	ARITHMETIC MEAN LOS	10TH PERCENTILE	25TH PERCENTILE	50TH PERCENTILE	75TH PERCENTILE	90TH PERCENTILE
215	41073	4.1261	2	2	3	5	7
216	6714	12.1844	3	5	9	15	25
217	19093	16.9796	3	6	11	20	36
218	23698	6.8091	2	3	5	8	13
219	18715	4.0628	2	2	3	5	7
220	4	3.7500	1	1	2	3	9
221	5075	8.7639	2	4	6	10	17
222	3797	4.1675	1	2	3	5	8
223	20488	3.0493	1	1	2	3	6
224	8684	2.3814	1	1	2	3	4
225	6956	5.0608	1	2	3	6	11
226	5864	7.2121	1	2	5	9	15
227	5172	3.1495	1	1	2	4	6
228	3231	3.7493	1	1	2	4	8
229	1553	2.3973	1	1	2	3	5
230	2696	5.5438	1	2	3	6	12
231	10959	5.5229	1	2	3	6	12
232	647	4.4699	1	1	2	5	10
233	4757	9.7675	2	4	7	12	19
234	2268	4.4453	1	2	3	6	9
235	6051	7.6691	2	3	5	8	15
236	39666	6.9787	2	3	5	8	13
237	1586	4.9098	1	2	4	6	9
238	7318	11.3360	3	5	8	13	22
239	62410	8.3701	3	4	6	10	16
240	11969	7.9905	2	4	6	10	16
241	2988	4.8313	1	2	4	6	9
242	2529	8.8802	3	4	7	11	17
243	87689	6.1328	2	3	5	8	11
244	11745	6.3745	2	3	5	8	12
245	4363	4.4873	1	2	3	6	8
246	1413	4.6914	2	2	4	6	8
247	10465	4.2654	1	2	3	5	8
248	6734	5.7180	2	3	4	7	10
249	9848	4.6294	1	2	3	6	9
250	3517	5.6230	1	2	4	6	11
251	2309	3.2278	1	1	2	4	6
253	18421	6.5600	2	3	5	7	12
254	9843	4.0040	1	2	3	5	7
256	9680	4.3875	1	2	3	5	9
257	26533	3.8836	2	2	3	4	7
258	20468	2.7710	1	2	2	3	5
259	4469	4.0759	1	1	2	4	8
260	5243	1.9804	1	1	2	2	3
261	2530	2.5775	1	1	2	3	5
262	800	4.0325	1	1	2	5	9
263	30952	15.7009	4	7	11	19	31
264	3530	9.0620	3	4	7	11	18
265	4687	7.8816	1	2	5	9	17
266	2973	3.8291	1	1	3	5	8
267	252	4.5000	1	1	2	5	9
268	1148	4.3476	1	1	2	5	9

TABLE 7B - MEDICARE PROSPECTIVE PAYMENT SYSTEM
SELECTED PERCENTILE LENGTHS OF STAY
FY94 MEDPAR UPDATE 12/94 GROUPER V13.0

DRG	NUMBER DISCHARGES	ARITHMETIC MEAN LOS	10TH PERCENTILE	25TH PERCENTILE	50TH PERCENTILE	75TH PERCENTILE	90TH PERCENTILE
269	10951	9.9332	2	4	7	13	20
270	3949	3.4657	1	1	2	4	7
271	21531	9.4089	3	5	7	11	17
272	6519	8.0561	2	4	6	10	15
273	1525	5.9528	2	3	4	7	12
274	2807	8.0997	1	3	6	10	17
275	236	3.3898	1	1	2	4	8
276	932	5.2929	2	3	4	7	10
277	81902	7.2734	3	4	6	9	13
278	25360	5.4290	2	3	5	7	9
279	7	5.5714	1	2	3	4	6
280	13662	5.5282	1	2	4	7	10
281	6032	3.8984	1	2	3	5	7
282	1	18.0000	18	18	18	18	18
283	5628	5.9394	2	3	4	7	11
284	1756	4.0598	1	2	3	5	8
285	4866	15.3553	4	7	11	19	29
286	1902	8.9621	3	5	6	10	17
287	6650	15.5054	4	6	10	18	31
288	812	8.0776	3	4	6	8	14
289	5071	4.5401	1	2	3	4	10
290	8970	2.9600	1	2	2	3	5
291	83	1.6145	1	1	1	2	3
292	5246	13.7686	3	5	10	17	27
293	287	6.2718	1	2	5	8	12
294	94388	6.1464	2	3	5	7	11
295	3662	5.0459	1	2	4	6	9
296	225258	7.0066	2	3	5	8	13
297	33881	4.5968	1	2	3	5	8
298	88	3.3523	1	1	2	4	5
299	917	6.2345	1	2	4	7	12
300	13938	7.8190	2	4	6	9	15
301	1887	4.5829	1	2	4	6	8
302	7518	14.0459	6	8	11	16	25
303	18434	11.0042	5	6	9	13	20
304	13366	10.9868	3	5	8	13	22
305	2556	5.2277	1	3	4	6	9
306	12083	7.0795	2	3	5	9	15
307	2896	3.2441	1	2	3	4	5
308	9940	7.5019	1	3	5	9	16
309	3511	3.1820	1	1	2	4	6
310	31563	4.8832	1	2	3	6	10
311	11705	2.3329	1	1	2	3	4
312	2334	5.1110	1	2	3	6	11
313	972	2.5195	1	1	2	3	5
314	1	5.0000	5	5	5	5	5
315	30057	10.3051	1	2	6	13	23
316	64963	8.0010	2	3	6	10	16
317	854	4.0328	1	1	2	4	8
318	6426	7.5128	2	3	5	9	15
319	518	3.3919	1	1	2	4	7
320	178229	7.0271	3	4	5	8	13

TABLE 7B - MEDICARE PROSPECTIVE PAYMENT SYSTEM
SELECTED PERCENTILE LENGTHS OF STAY
FY94 MEDPAR UPDATE 12/94 GROUPER V13.0

DRG	NUMBER DISCHARGES	ARITHMETIC MEAN LOS	10TH PERCENTILE	25TH PERCENTILE	50TH PERCENTILE	75TH PERCENTILE	90TH PERCENTILE
321	23919	4.9319	2	3	4	6	8
322	70	5.1143	1	2	3	6	10
323	19028	3.7525	1	2	3	5	7
324	9615	2.2315	1	1	2	3	4
325	8493	4.8757	1	2	4	6	9
326	2547	3.3294	1	2	3	4	6
327	5	2.0000	1	1	2	2	4
328	893	4.4009	1	2	3	5	8
329	146	2.2945	1	1	2	3	5
331	37697	6.7524	2	3	5	8	13
332	4869	4.0766	1	2	3	5	8
333	341	5.9589	1	2	4	7	14
334	23221	6.8622	4	5	6	8	10
335	10551	5.2485	3	4	5	6	8
336	71153	4.5795	2	2	3	5	8
337	45235	2.9648	1	2	3	4	4
338	6335	5.6153	1	2	4	7	12
339	2641	4.7228	1	2	3	6	10
340	1	2.0000	2	2	2	2	2
341	7744	3.7030	1	2	3	4	7
342	230	4.1435	1	1	2	5	8
344	5275	3.4923	1	1	2	4	7
345	1670	4.5958	1	2	3	5	10
346	5861	7.4817	2	3	5	9	15
347	549	3.5137	1	1	2	4	7
348	3252	5.2638	1	2	4	6	10
349	793	3.0958	1	1	2	4	6
350	7394	5.2410	2	3	4	6	9
352	707	4.2518	1	2	3	5	9
353	2641	9.3817	4	5	7	10	17
354	10461	6.7522	3	4	5	7	12
355	5561	3.9984	3	3	4	5	6
356	36598	3.3220	2	2	3	4	5
357	6705	10.6043	4	5	8	12	19
358	27581	5.0507	3	3	4	6	8
359	26655	3.4759	2	3	3	4	5
360	9686	4.2209	2	2	3	5	7
361	554	4.9603	1	2	3	5	11
363	4934	3.7148	1	2	2	4	7
364	1902	3.8291	1	1	2	5	8
365	2557	8.6394	2	3	6	11	18
366	4749	8.1093	2	3	6	10	17
367	581	3.5473	1	1	2	4	8
368	2156	7.1577	2	3	6	9	14
369	2432	3.8919	1	1	3	5	8
370	1004	5.6882	3	3	4	6	10
371	971	3.7508	2	3	3	4	5
372	729	3.6406	1	2	2	3	6
373	3479	2.0969	1	1	2	2	3
374	128	2.9141	1	2	2	3	4
375	6	2.6667	1	2	3	3	3
376	194	3.7062	1	1	2	4	9

TABLE 7B - MEDICARE PROSPECTIVE PAYMENT SYSTEM
SELECTED PERCENTILE LENGTHS OF STAY
FY94 MEDPAR UPDATE 12/94 GROUPER V13.0

DRG	NUMBER DISCHARGES	ARITHMETIC MEAN LOS	10TH PERCENTILE	25TH PERCENTILE	50TH PERCENTILE	75TH PERCENTILE	90TH PERCENTILE
377	34	4.1765	1	1	2	5	10
378	188	2.8298	1	2	3	4	4
379	346	3.3584	1	1	2	4	7
380	77	1.9870	1	1	1	2	4
381	223	2.0942	1	1	1	2	4
382	59	1.8136	1	1	1	1	2
383	1243	4.3805	1	2	3	5	8
384	128	2.0313	1	1	1	2	4
385	3	5.6667	1	1	7	9	9
388	1	2.0000	2	2	2	2	2
389	27	10.3333	1	5	9	14	18
390	19	4.5263	1	2	2	3	7
392	2574	11.9841	4	6	9	15	24
393	4	10.5000	4	4	7	12	19
394	1810	8.4691	1	2	5	10	19
395	68994	5.7779	1	2	4	7	11
396	20	3.8500	1	1	2	4	8
397	13959	6.6139	2	3	5	8	13
398	17059	7.1205	2	4	6	8	13
399	1318	4.7170	1	2	4	6	8
400	7944	11.2116	2	4	8	14	25
401	6868	13.0079	3	5	10	16	27
402	1757	4.4121	1	1	3	6	10
403	34137	9.9027	2	4	7	13	21
404	3918	5.1194	1	2	4	7	10
406	3626	11.9404	3	5	9	15	24
407	794	4.9572	1	2	4	6	9
408	3343	8.8086	1	2	5	11	21
409	7009	6.9568	2	3	4	7	15
410	105626	3.3443	1	2	3	4	6
411	53	3.3585	1	1	3	5	7
412	65	2.9692	1	1	2	4	7
413	8884	9.1275	2	4	7	11	19
414	898	5.5668	1	2	4	7	11
415	38002	17.1780	4	8	13	21	34
416	182780	8.8491	2	4	7	11	17
417	32	6.2813	2	3	5	7	11
418	17046	7.2477	2	4	6	9	13
419	16750	6.1816	2	3	5	7	11
420	2890	4.5689	2	2	4	6	8
421	13329	4.8718	2	2	4	6	9
422	81	4.5062	1	2	3	6	9
423	8858	9.3477	3	4	7	11	19
424	2309	19.7774	3	7	13	24	41
425	17593	5.4691	1	2	4	7	11
426	5333	6.3244	1	3	4	8	13
427	2097	6.0367	1	2	4	8	13
428	1059	8.1926	1	3	5	10	18
429	36291	10.3884	2	4	6	11	20
430	62101	10.8276	2	4	8	14	22
431	223	7.5516	2	3	6	9	14
432	501	6.8822	1	2	4	7	14

TABLE 7B - MEDICARE PROSPECTIVE PAYMENT SYSTEM
SELECTED PERCENTILE LENGTHS OF STAY
FY94 MEDPAR UPDATE 12/94 GROUPER V13.0

DRG	NUMBER DISCHARGES	ARITHMETIC MEAN LOS	10TH PERCENTILE	25TH PERCENTILE	50TH PERCENTILE	75TH PERCENTILE	90TH PERCENTILE
433	7667	3.6939	1	1	2	4	8
434	20984	6.3469	2	3	5	7	12
435	14493	5.0896	1	3	4	6	9
436	2792	15.4925	4	9	14	21	28
437	14398	11.7395	4	7	10	14	21
439	930	9.2161	1	3	6	11	19
440	4551	10.9143	2	4	7	13	24
441	619	3.6397	1	1	2	4	7
442	13631	9.0192	1	3	6	11	19
443	3679	3.3148	1	1	2	4	7
444	3480	5.7437	2	3	4	7	11
445	1397	3.8712	1	2	3	5	7
447	3578	3.0467	1	1	2	4	6
448	20	1.0000	1	1	1	1	1
449	30245	4.8298	1	2	3	6	10
450	6446	2.5476	1	1	2	3	5
451	6	3.3333	1	1	1	5	5
452	19188	5.6252	1	2	4	7	12
453	3864	3.4035	1	1	2	4	7
454	4410	6.0145	1	2	4	7	12
455	978	3.4673	1	1	2	4	7
456	194	8.1598	1	2	4	9	20
457	148	5.1689	1	1	1	6	13
458	1688	18.3691	4	8	14	24	37
459	599	13.2654	3	5	8	14	25
460	2438	7.3048	2	3	5	9	14
461	3593	5.6691	1	1	2	5	15
462	13129	14.9254	5	7	13	20	28
463	11082	5.8217	2	3	4	7	11
464	2624	3.9177	1	2	3	5	7
465	258	2.8760	1	1	2	3	5
466	2308	4.5308	1	1	2	4	10
467	2672	4.9008	1	1	2	5	8
468	62701	16.2198	3	7	12	21	32
471	8815	9.5860	4	6	8	11	16
472	184	30.7989	1	4	22	43	72
473	8260	14.9343	2	4	8	23	36
475	88675	12.8913	2	6	10	17	25
476	7915	15.0719	4	8	12	18	27
477	33613	9.3883	1	3	6	12	19
478	117680	8.9922	2	3	7	11	19
479	16825	4.8924	1	2	4	6	9
480	283	32.3816	10	14	22	40	70
481	130	30.3308	17	22	28	37	46
482	7137	16.2091	5	8	12	19	30
483	36266	49.1117	16	25	39	60	91
484	329	17.2097	2	7	14	23	33
485	3005	13.1304	5	7	10	15	25
486	2112	15.0578	1	6	11	19	30
487	3563	9.6904	2	4	7	12	19
488	1174	18.6431	5	8	14	23	36
489	13016	11.6713	3	4	8	14	24

TABLE 7B - MEDICARE PROSPECTIVE PAYMENT SYSTEM
SELECTED PERCENTILE LENGTHS OF STAY
FY94 MEDPAR UPDATE 12/94 GROUPER V13.0

DRG	NUMBER DISCHARGES	ARITHMETIC MEAN LOS	10TH PERCENTILE	25TH PERCENTILE	50TH PERCENTILE	75TH PERCENTILE	90TH PERCENTILE
490	3903	7.4220	1	3	5	8	15
491	9200	4.7991	2	3	4	6	8
492	2057	18.3379	4	5	12	28	38
493	52801	6.1255	1	2	5	8	12
494	28671	2.3049	1	1	1	3	5
495	133	24.1579	9	14	19	27	36
	==========						
	10916656						

BILLING CODE 4120-01-C

TABLE 8a.—STATEWIDE AVERAGE OPERATING COST-TO-CHARGE RATIOS FOR URBAN AND RURAL HOSPITALS (CASE WEIGHTED) APRIL 1995

State	Urban	Rural
ALABAMA	0.435	0.483
ALASKA	0.535	0.721
ARIZONA	0.459	0.643
ARKANSAS	0.552	0.515
CALIFORNIA	0.436	0.536
COLORADO	0.518	0.582
CONNECTICUT	0.556	0.576
DELAWARE	0.533	0.516
DISTRICT OF COLUMBIA	0.532	.....
FLORIDA	0.435	0.431
GEORGIA	0.541	0.540
HAWAII	0.510	0.504
IDAHO	0.580	0.673
ILLINOIS	0.523	0.605
INDIANA	0.580	0.633
IOWA	0.554	0.716
KANSAS	0.506	0.684
KENTUCKY	0.522	0.562
LOUISIANA	0.497	0.559
MAINE	0.613	0.560
MARYLAND	0.764	0.806
MASSACHUSETTS	0.612	0.622
MICHIGAN	0.549	0.657
MINNESOTA	0.583	0.647
MISSISSIPPI	0.544	0.532
MISSOURI	0.473	0.531
MONTANA	0.544	0.661
NEBRASKA	0.529	0.694
NEVADA	0.343	0.628
NEW HAMPSHIRE	0.592	0.625
NEW JERSEY	0.543	.....
NEW MEXICO	0.485	0.549
NEW YORK	0.633	0.721
NORTH CAROLINA	0.567	0.521
NORTH DAKOTA	0.652	0.695
OHIO	0.594	0.633
OKLAHOMA	0.506	0.571
OREGON	0.604	0.637
PENNSYLVANIA	0.454	0.579
PUERTO RICO	0.554	0.851
RHODE ISLAND	0.615	.....
SOUTH CAROLINA	0.510	0.524
SOUTH DAKOTA	0.558	0.656
TENNESSEE	0.530	0.570
TEXAS	0.490	0.593
UTAH	0.591	0.648
VERMONT	0.627	0.611
VIRGINIA	0.513	0.547
WASHINGTON	0.656	0.675
WEST VIRGINIA	0.577	0.529
WISCONSIN	0.640	0.706
WYOMING	0.611	0.765

TABLE 8b.—STATEWIDE AVERAGE CAPITAL COST-TO-CHARGE RATIOS FOR URBAN AND RURAL HOSPITALS (CASE WEIGHTED) APRIL 1995

State	Ratio
ALABAMA	0.053
ALASKA	0.075
ARIZONA	0.062
ARKANSAS	0.050
CALIFORNIA	0.041
COLORADO	0.051
CONNECTICUT	0.036

TABLE 8b.—STATEWIDE AVERAGE CAPITAL COST-TO-CHARGE RATIOS FOR URBAN AND RURAL HOSPITALS (CASE WEIGHTED) APRIL 1995—Continued

State	Ratio
DELAWARE	0.055
DISTRICT OF COLUMBIA	0.043
FLORIDA	0.052
GEORGIA	0.050
HAWAII	0.063
IDAHO	0.075
ILLINOIS	0.049
INDIANA	0.059
IOWA	0.058
KANSAS	0.062
KENTUCKY	0.059
LOUISIANA	0.074
MAINE	0.042
MASSACHUSETTS	0.061
MICHIGAN	0.059
MINNESOTA	0.054
MISSISSIPPI	0.055
MISSOURI	0.053
MONTANA	0.067
NEBRASKA	0.061
NEVADA	0.036
NEW HAMPSHIRE	0.065
NEW JERSEY	0.051
NEW MEXICO	0.056
NEW YORK	0.061
NORTH CAROLINA	0.048
NORTH DAKOTA	0.075
OHIO	0.061
OKLAHOMA	0.059
OREGON	0.068
PENNSYLVANIA	0.047
PUERTO RICO	0.078
RHODE ISLAND	0.027
SOUTH CAROLINA	0.064
SOUTH DAKOTA	0.065
TENNESSEE	0.057
TEXAS	0.058
UTAH	0.050
VERMONT	0.050
VIRGINIA	0.057
WASHINGTON	0.068
WEST VIRGINIA	0.058
WISCONSIN	0.048
WYOMING	0.072

Appendix A—Regulatory Impact Analysis

I. Introduction

We generally prepare a regulatory flexibility analysis that is consistent with the Regulatory Flexibility Act (RFA) (5 U.S.C. 601 through 612), unless the Secretary certifies that a proposed rule would not have a significant economic impact on a substantial number of small entities. For purposes of the RFA, we consider all hospitals to be small entities.

Also, section 1102(b) of the Act requires the Secretary to prepare a regulatory impact analysis for any proposed rule that may have a significant impact on the operations of a substantial number of small rural hospitals. Such an analysis must conform to the provisions of section 603 of the RFA. With the exception of hospitals located in certain New England counties, for purposes of section 1102(b) of the Act, we define a small rural hospital as a hospital with fewer than 100 beds that is located outside of a Metropolitan Statistical Area (MSAs) or New England County Metropolitan Area (NECMA). Section 601(g) of the Social Security Amendments of 1983 (Public Law 98–21) designated hospitals in certain New England counties as belonging to the adjacent NECMA. Thus, for purposes of the prospective payment system, we classified these hospitals as urban hospitals.

It is clear that the changes being proposed in this document would affect both a substantial number of small rural hospitals as well as other classes of hospitals, and the effects on some may be significant. Therefore, the discussion below, in combination with the rest of this proposed rule, constitutes a combined regulatory impact analysis and regulatory flexibility analysis.

II. Objectives

The primary objective of the prospective payment system is to create incentives for hospitals to operate efficiently and minimize unnecessary costs, and at the same time ensure that payments are sufficient to adequately compensate hospitals for their legitimate costs. In addition, we share national goals of deficit reduction and restraints on government spending in general.

We believe the proposed changes would further each of these goals while maintaining the financial viability of the hospital industry and ensuring access to high quality care for beneficiaries. We expect that these proposed changes would ensure that the outcomes of this payment system are, in general, reasonable and equitable while avoiding or minimizing unintended adverse consequences.

III. Limitations of Our Analysis

As has been the case in previously published regulatory impact analyses, the following quantitative analysis presents the projected effects of our proposed policy changes, as well as statutory changes effective for FY 1996, on various hospital groups. We estimate the effects of each policy change by estimating payments while holding all other payment variables constant. We use the best data available, but we do not attempt to predict behavioral responses to our policy changes, and we do not make adjustments for future

changes in such variables as admissions, lengths of stay, or case mix. As we have done in previous proposed rules, we are soliciting comments and information about the anticipated effects of these changes on the prospective payment system, and our methodology for estimating them.

IV. Hospitals Included In and Excluded From the Prospective Payment System

The prospective payment systems for hospital inpatient operating and capital-related costs encompass nearly all general, short-term, acute care hospitals that participate in the Medicare program. There were 46 Indian Health Service hospitals in our database, which we excluded from the analysis due to the special characteristics of the payment method for these hospitals. Only the 49 short-term, acute care hospitals in Maryland remain excluded from the prospective payment system under the waiver at section 1814(b)(3) of the Act. (As of January 1, 1995, the hospitals participating in the New York Finger Lakes demonstration project began to be paid under the prospective payment system.) Thus, as of April 1995, just over 5,150 hospitals were receiving prospectively based payments for furnishing inpatient services. This represents about 82 percent of all Medicare-participating hospitals. The majority of this impact analysis focuses on this set of hospitals.

The remaining 18 percent are specialty hospitals that are excluded from the prospective payment system and continue to be paid on the basis of their reasonable costs, subject to a rate-of-increase ceiling on their inpatient operating costs per discharge. These hospitals include psychiatric, rehabilitation, long-term care, children's, and cancer hospitals. The impacts of our proposed policy changes on these hospitals is discussed below.

V. Impact on Excluded Hospitals and Units

As of April 1995, just over 1,100 specialty hospitals are excluded from the prospective payment system and are instead paid on a reasonable cost basis subject to the rate-of-increase ceiling under § 413.40. In addition, approximately 2,230 psychiatric and rehabilitation units in hospitals that are subject to the prospective payment system are excluded from the prospective payment system and paid in accordance with § 413.40.

In accordance with section 1886(b)(3)(B)(ii)(V) of the Act, the update factor applicable to the rate-of-increase limit for excluded hospitals and units for FY 1996 would be the hospital market basket minus 1.0 percentage point, adjusted to account for the relationship between the hospital's allowable operating cost per case and its target amounts. We are currently projecting an increase in the excluded hospital market basket of 3.6 percent.

The impact on excluded hospitals and units of the proposed update in the rate-of-increase limit depends on the cumulative cost increases experienced by each excluded hospital and excluded unit since its applicable base period. For excluded hospitals and units that have maintained their cost increases at a level below the percentage increases in the rate-of-increase limits since their base period, the major effect will be on the level of incentive payments these hospitals and units receive. Conversely, for excluded hospitals and units with per-case cost increases above the cumulative update in their rate-of-increase limit, the major effect will be the amount of excess costs that the hospitals would have to absorb.

In this context, we note that, under § 413.40(d)(3), an excluded hospital or unit whose costs exceed the rate-of-increase limit is allowed to receive the lower of its rate-of-increase ceiling plus 50 percent of reasonable costs in excess of the ceiling, or 110 percent of its ceiling. In addition, under the various provisions set forth in § 413.40, excluded hospitals and units can obtain payment adjustments for significant, yet justifiable, increases in operating costs that exceed the limit. At the same time, however, by generally limiting payment increases, we continue to provide an incentive for excluded hospitals and units to restrain the growth in their spending for patient services.

VI. Quantitative Impact Analysis of the Proposed Policy Changes Under the Prospective Payment System for Operating Costs

A. Basis and Methodology of Estimates

In this proposed rule, we are announcing policy changes and payment rate updates for the prospective payment systems for operating and capital-related costs. We have prepared separate analyses of the proposed changes to each system, beginning with changes to the operating prospective payment system.

The data used in developing the quantitative analyses presented below are taken from the FY 1994 MedPAR file and the most current provider-specific file that is used for payment purposes. Although the analyses of the changes to the operating prospective payment system do not incorporate any actual cost data, the most recently available hospital cost report data were used to create some of the variables by which hospitals are categorized. Our analysis has several qualifications. First, we do not make adjustments for behavioral changes that hospitals may adopt in response to these proposed policy changes. Second, due to the interdependent nature of the prospective payment system, it is very difficult to precisely quantify the impact associated with each proposed change. Third, we draw upon various sources for the data used to categorize hospitals in the tables. In some cases, particularly the number of beds, there is a fair degree of variation in the data from different sources. We have attempted to construct these variables with the best available source overall. For individual hospitals, however, some miscategorizations are possible.

Using cases in the FY 1994 MedPAR file, we simulated payments under the operating prospective payment system given various combinations of payment parameters. Any short-term, acute care hospitals not paid under the general prospective payment systems (Indian Health Service Hospitals and hospitals in Maryland) are excluded from the simulations. Payments under the capital prospective payment system, or payments for costs other than inpatient operating costs, are not analyzed here. Estimated payment impacts of proposed FY 1996 changes to the capital prospective payment system are discussed below in section VII of Appendix A.

The proposed changes discussed separately below are the following:

- The effects of the annual reclassification of diagnoses and procedures and the recalibration of the diagnosis-related group (DRG) relative weights required by section 1886(d)(4)(C) of the Act.
- The effects of changes in hospitals' wage index values reflecting the wage index update.
- The effects of changing the transfer payment policy to a graduated per diem payment methodology.
- The effects of geographic reclassifications by the Medicare Geographic Classification Review Board (MGCRB) that are effective in FY 1996.
- The effects of phasing out payments for extraordinarily lengthy cases (day outlier cases) by 50 percent (with a corresponding increase in payments for extraordinarily costly cases (cost outliers)), in accordance with section 1886(d)(5)(A)(v) of the Act.
- The total change in payments based on FY 1996 policies relative to payments based on FY 1995 policies.

To illustrate the impacts of the FY 1996 proposed changes, our FY 1996 baseline simulation model uses: the FY 1995 GROUPER (version 12.0); the FY 1995 wage indexes; the current uniform per diem transfer payment policy; no effects of FY 1996 reclassifications; and current outlier policy (25 percent phase-out of day outlier payments). Outliers are estimated to be 5.1 percent of total DRG payments.

Each policy change is then added incrementally to this baseline model, finally arriving at an FY 1996 model incorporating all of the proposed changes. This allows us to isolate the effects of each proposed change.

Our final comparison illustrates the percent change in payments per case from FY 1995 to FY 1996. Three factors not displayed in the previous five columns have significant impacts here. First is the update to the standardized amounts. In accordance with section 1886(d)(3)(A)(iv) of the Act, we are proposing to update the large urban and the other areas average standardized amounts for FY 1996 using the most recent forecasted hospital market basket increase for FY 1996 of 3.5 percent, minus 2.0 percentage points. Thus, the update to the large urban and other areas standardized amounts is 1.5 percent. Similarly, section 1886(b)(3)(C)(ii) of the Act provides that the update factor applicable to the hospital-specific rates for sole community hospitals (SCHs) and essential access community hospitals (EACHs) (which are treated as SCHs for payment purposes) is also the market basket increase minus 2.0 percent, or 1.5 percent.

A second significant factor impacting upon changes in payments per case from FY 1995 to FY 1996 is a change in MGCRB reclassification status from one year to the next. That is, hospitals reclassified in FY 1995 that are no longer reclassified in FY 1996 may have a negative payment impact going from FY 1995 to FY 1996, and vice versa. In some cases these impacts can be quite substantial, so that a relatively few number of hospitals in a particular category that lost their reclassification status can hold the average percentage change for the category below the mean.

Third, when comparing our estimated FY 1995 payments to FY 1996 payments, another significant consideration is that we currently estimate that outlier payments during FY 1995 will be 4.2 percent of total DRG payments. When the FY 1995 final rule was published September 1, 1994 (59 FR 45330), we estimated FY 1995 outlier payments would be 5.1 percent of total DRG payments, and the standardized amounts were correspondingly reduced. The effects of the lower than expected outlier payments during FY 1995 are reflected in the analyses below comparing our current estimates of FY 1995 total payments to estimated FY 1996 payments.

Table I demonstrates the results of our analysis. The table categorizes hospitals by various geographic and special payment consideration groups to illustrate the varying impacts on different types of hospitals. The top row of the table shows the overall impact on the 5,154 hospitals included in the analysis. This is 100 fewer hospitals than were included in the impact analysis in the FY 1995 final rule (59 FR 45330). Data for 106 hospitals that were included in last year's analysis were not available for analysis this year; however, data were available this year for 1 hospital for which data were not available last year. In addition, 5 hospitals previously excluded from our analysis because they were participating in the Finger Lakes demonstration project are included in our analysis this year because the demonstration authority has expired and these hospitals are now being paid under the prospective payment system.

The next four rows of Table I contain hospitals categorized according to their geographic location (all urbans as well as large urban and other urban or rural). There are 2,895 hospitals located in urban areas (MSAs or NECMAs) included in our analysis. Among these, there are 1,622 hospitals located in large urban areas (populations over 1 million), and 1,273 hospitals in other urban areas (populations of 1 million or fewer). In addition, there are 2,259 hospitals in rural areas. The next two groupings are by bed size categories, shown separately for urban and rural hospitals. The final groupings by geographic location are by census divisions, also shown separately for urban and rural hospitals.

The second part of Table I shows changes in payments based on hospitals' FY 1996 payment classifications, including any reclassifications under section 1886(d)(10) of the Act. For example, the rows labeled urban, large urban, other urban, and rural, show the numbers of hospitals being paid based on these categorizations, after consideration of geographic reclassifications, are 3,106, 1,815, 1,291, and 2,048, respectively.

The next three groupings examine the impacts of the proposed changes on hospitals grouped by whether or not they have residency programs (teaching hospitals that receive an indirect medical education (IME) adjustment), receive disproportionate share (DSH) payments, or some combination of these two adjustments. There are 4,104 nonteaching hospitals in our analysis, 826 with fewer than 100 residents, and 224 with 100 or more residents.

In the DSH categories, hospitals are grouped according to their DSH payment status. In the past, we have included as urban hospitals those that are located in a rural area but were reclassified as urban by the MGCRB for purposes of the standardized amount, since they have been considered urban in determining the amount of their DSH adjustment. This year, however, we have isolated these hospitals in separate rows to identify the payment impacts of reclassification solely for DSH. In these rows, labeled ''Large Urban and DSH'' and ''DSH Only'', under the heading ''Reclassified Rural DSH,'' we group reclassified rural hospitals that receive DSH after reclassification based on whether they also receive the higher large urban amount, or are only benefitting from reclassification by receiving higher DSH payments. Hospitals in the rural DSH categories, therefore, including those in the rural referral center (RRC) and SCH categories, represent hospitals that were not reclassified for purposes of the standardized amount (they may, however, have been reclassified for purposes of assigning the wage index). The next category groups hospitals paid on the basis of the urban standardized amount in terms of whether they receive the IME adjustment, the DSH adjustment, both, or neither.

The next six rows examine the impacts of the proposed changes on rural hospitals by special payment groups (SCHs, RRCs, and EACHs). Rural hospitals reclassified for FY 1996 for purposes of the standardized amount are not included here.

The RRCs (111), SCH/EACHs (612), and SCH/EACH and RRCS (46) shown here were not reclassified for purposes of the standardized amount. There are 2 EACHs included in our analysis and 3 EACH/RRCs.

There are 9 RRCs and 13 SCHs that will be reclassified for the standardized amount in FY 1996 and are therefore not included in these rows. In addition, two hospitals that are both SCH/RRCs will be reclassified for the standardized amount (one of these hospitals will also be reclassified for the wage index).

The next two groupings are based on type of ownership and the hospital's Medicare utilization expressed as a percent of total patient days. These data are taken from the FY 1993 Medicare cost report files, the latest available.

Data needed to calculate Medicare utilization percentages were unavailable for 68 hospitals. For the most part, these are either new hospitals or hospitals filing manual cost reports that are not yet entered into the data base.

The next series of groupings concern the geographic reclassication status of hospitals. The first three groupings display hospitals that were reclassified by the MGCRB for either FY 1995 or FY 1996, or for both years, by urban/rural status. The next rows illustrate the overall number of reclassifications, as well as the numbers of reclassified hospitals grouped by urban and rural location. The final row in Table I contains hospitals located in rural counties but deemed to be urban under section 1886(d)(8)(B) of the Act.

TABLE I.—IMPACT ANALYSIS OF CHANGES FOR FY 1996 OPERATING PROSPECTIVE PAYMENT SYSTEM

[Percent Changes in Payments per Case]

	No. of hosps.[1]	DRG recalibration[2]	New wage data[3]	New transfer policy[4]	MGCRB reclassification[5]	Day outlier policy changes[6]	All FY 96 changes[7]
	(0)	(1)	(2)	(3)	(4)	(5)	(6)
(By Geographic Location)							
All Hospitals	5,154	0.0	0.0	0.0	0.0	0.0	2.4
Urban Hospitals	2,895	0.0	−0.1	0.0	−0.4	0.0	2.3
Large Urban	1,622	0.1	−0.4	0.0	−0.5	−0.1	2.1
Other Urban	1,273	0.0	0.4	0.0	−0.1	0.1	2.8
Rural Hospitals	2,259	0.1	0.3	0.3	2.3	0.0	2.9
Bed Size (Urban)							
0–99 Beds	716	0.0	0.0	0.3	−0.4	0.2	2.6
100–199 Beds	918	0.0	0.2	0.1	−0.4	0.1	2.7
200–299 Beds	601	0.0	0.1	0.0	−0.3	0.0	2.5
300–499 Beds	480	0.0	−0.2	−0.1	−0.4	0.0	2.2
500 or more Beds	180	0.1	−0.3	−0.2	−0.3	−0.2	2.0
Bed Size (Rural)							
0–49 Beds	1,171	0.1	0.2	0.6	0.0	0.0	2.9
50–99 Beds	644	0.1	0.2	0.4	0.9	0.1	3.1
100–149 Beds	230	0.1	0.4	0.3	3.5	0.0	2.9
150–199 Beds	108	0.1	0.2	0.1	2.6	0.0	2.6
200 or more Beds	86	0.0	0.4	0.0	4.8	0.0	2.7
Urban by Census Division							
New England	163	0.1	−0.2	0.0	−0.1	−0.2	2.0
Middle Atlantic	440	0.4	−0.7	−0.1	−0.4	−0.7	1.7
South Atlantic	431	0.0	0.0	0.0	−0.5	0.1	2.4
East North Central	481	−0.1	0.0	0.0	−0.1	0.2	2.5
East South Central	164	−0.1	0.0	−0.1	−0.4	0.1	2.5
West North Central	196	−0.1	−0.6	−0.1	−0.5	0.2	1.8
West South Central	371	−0.2	0.5	−0.1	−0.5	0.3	3.2
Mountain	119	0.0	−0.5	−0.1	−0.4	0.3	2.0
Pacific	483	−0.1	0.6	0.0	−0.5	0.2	2.7
Puerto Rico	47	−0.2	2.2	−0.2	−0.5	0.0	4.5
Rural by Census Division							
New England	53	0.1	0.7	0.1	1.3	0.1	3.6
Middle Atlantic	84	0.4	−0.5	0.1	1.1	−0.2	2.4
South Atlantic	297	0.1	0.6	0.3	3.1	0.0	2.8
East North Central	305	0.1	0.5	0.4	1.9	0.1	3.4
East South Central	275	0.0	0.9	0.4	3.2	0.0	3.2
West North Central	527	0.1	−0.1	0.3	2.1	0.1	2.6
West South Central	352	0.1	−0.4	0.3	3.3	0.1	2.9
Mountain	218	0.1	−0.1	0.2	−0.1	0.1	1.9
Pacific	143	0.1	0.8	0.2	1.7	0.1	3.3
Puerto Rico	5	0.6	−6.9	−0.1	−0.5	0.2	−4.2
(By Payment Categories)							
Urban Hospitals	3,106	0.0	−0.1	0.0	−0.3	0.0	2.3
Large Urban	1,815	0.1	−0.3	0.0	−0.3	−0.1	2.2
Other Urban	1,291	0.0	0.3	0.0	−0.2	0.1	2.7
Rural Hospitals	2,048	0.1	0.2	0.3	1.9	0.0	2.9
Teaching Status							
Non-Teaching	4,104	0.0	0.1	0.1	0.3	0.1	2.7
Less than 100 Res.	826	0.0	0.0	−0.1	−0.4	0.0	2.3
100+ Residents	224	0.1	−0.4	−0.1	−0.3	−0.4	1.8
Disproportionate Share Hospitals (DSH)							
Non-DSH	3,223	0.1	0.0	0.1	0.1	0.1	2.6
Urban DSH 100 Beds or more	1,302	0.0	−0.1	−0.1	−0.5	−0.1	2.2

TABLE I.—IMPACT ANALYSIS OF CHANGES FOR FY 1996 OPERATING PROSPECTIVE PAYMENT SYSTEM—Continued

[Percent Changes in Payments per Case]

	No. of hosps.[1]	DRG recalibration[2]	New wage data[3]	New transfer policy[4]	MGCRB reclassification[5]	Day outlier policy changes[6]	All FY 96 changes[7]
	(0)	(1)	(2)	(3)	(4)	(5)	(6)
Fewer than 100 Beds	112	−0.2	0.1	0.3	−0.6	0.3	3.1
Reclassified Rural DSH Large Urban and DSH	54	0.0	0.4	0.0	3.1	0.0	3.4
DSH Only	53	0.1	0.5	0.3	8.4	−0.1	2.7
Rural DSH Sole Community (SCH)	137	0.1	0.1	0.2	0.1	0.0	1.8
Referral Centers (RRC)	40	0.1	0.4	0.1	3.7	−0.1	3.0
Other Rural DSH Hosp. 100 Beds or More	83	0.1	0.5	0.4	5.5	0.0	3.2
Fewer than 100 Beds	150	0.0	0.7	0.7	−0.1	0.1	3.3
Urban Teaching and DSH							
Both Teaching and DSH	653	0.0	−0.2	−0.1	−0.4	−0.3	2.0
Teaching and No DSH	350	0.0	−0.2	−0.1	−0.3	0.0	2.3
No Teaching and DSH	868	0.0	0.2	0.0	0.0	0.1	2.6
No Teaching and No DSH	1,235	0.1	0.0	0.1	−0.2	0.2	2.7
Rural Hospital Types							
Nonspecial Status Hospitals	1,279	0.1	0.4	0.6	1.9	0.1	3.4
RRC	111	0.0	0.4	0.1	5.0	0.1	3.4
SCH/Each	612	0.2	−0.1	0.1	0.1	0.0	1.9
SCH/Each and RRC	46	0.2	0.0	0.0	0.1	−0.1	1.9
Type of Ownership							
Voluntary	3,095	0.1	−0.1	0.0	−0.1	−0.1	2.3
Proprietary	725	−0.1	0.0	0.0	0.3	0.2	2.6
Government	1,334	0.0	0.2	0.1	0.2	0.0	2.7
Medicare Utilization as a Percent of Inpatient Days							
0–25	268	−0.1	−0.1	0.0	−0.1	−0.1	2.2
25–50	1,357	0.0	−0.1	−0.1	−0.2	−0.1	2.2
50–65	2,227	0.0	0.1	0.0	0.1	0.0	2.5
Over 65	1,234	0.1	−0.2	0.1	0.2	0.0	2.6
Unknown	68	0.5	−0.7	0.0	−0.4	−1.3	1.0
Hospitals Reclassified by the Medicare Geographic Review Board							
Reclassification Status During FY 95 and FY 96							
Reclassified During Both FY 95 and FY 96	465	0.1	0.2	0.1	4.4	0.0	2.7
Urban	175	0.1	0.1	0.0	2.3	0.0	2.5
Rural	290	0.0	0.3	0.2	8.1	0.0	2.9
Reclassified During FY 96 Only	153	0.2	0.1	0.1	3.1	0.0	7.1
Urban	34	0.3	−0.1	0.1	2.3	−0.2	7.4
Rural	119	0.1	0.3	0.2	3.7	0.1	6.8
Reclassified During FY 95 Only	220	−0.1	0.2	0.1	−1.0	0.1	−1.2
Urban	58	−0.2	0.3	−0.1	−2.2	0.1	−1.6
Rural	162	0.1	0.2	0.3	1.2	0.1	−0.4
FY 96 Reclassifications							
All Reclassified Hosp.	618	0.1	0.2	0.1	4.1	0.0	3.5
Stand. Amount Only	213	0.1	0.6	0.1	1.2	0.0	2.8
Wage Index Only	260	0.1	0.1	0.1	7.3	0.0	4.3
Both	145	0.1	0.0	0.0	3.2	0.0	3.2
Nonreclassified	4,509	0.0	−0.1	0.0	−0.6	0.0	2.3
All Urban Reclass.	209	0.1	0.1	0.0	2.3	−0.1	3.3
Stand. Amount Only	69	0.0	0.7	0.0	0.6	0.0	3.1
Wage Index Only	37	0.2	−0.2	−0.1	5.4	−0.2	3.9
Both	103	0.1	−0.1	0.0	1.7	0.0	3.0
Nonreclassified	2,686	0.0	−0.1	0.0	−0.6	0.0	2.2
All Rural Reclass.	409	0.0	0.3	0.2	6.9	0.1	3.9
Stand. Amount Only	144	0.1	0.4	0.3	2.2	0.1	2.5
Wage Index Only	223	0.0	0.2	8.2	8.5	0.1	4.6
Both	42	0.0	0.5	0.1	10.6	0.1	4.0
Nonreclassified	1,823	0.1	0.3	0.3	−0.2	0.0	2.3
Other Reclassified Hospitals (Section 1886(d)(8)(B))	27	0.1	−0.2	0.4	−0.4	0.1	2.8

[1] Because data necessary to classify some hospitals by category were missing, the total number of hospitals in each category may not equal the national total. Discharge data are from FY 1994, and hospital cost report data are from cost reporting periods beginning in FY 1992 and FY 1993.

[2] This column displays the payment impacts of the recalibration of the DRG weights and the classification changes, based on FY 1994 MedPAR data, in accordance with section 1886(d)(4)(C) of the Act.

[3] This column shows that payment impacts of updating the data used to calculate the wage index.

[4] This column displays the payment impacts of revising the per diem methodology for transfer cases from the current flat per diem methodology to a graduated per diem methodology.

[5] Shown here are the combined effects of geographic reclassification by the Medicare Geographic Classification Review Board (MGCRB). The effects shown here demonstrate the FY 1996 payment impacts of going from no reclassifications to the reclassifications scheduled to be in effect for FY 1996. Reclassification for prior years has no bearing on the payment impacts shown here.

[6] This column illustrates the payment impacts of our changes affecting payments for day outliers, in accordance with section 1886(d)(5)(A) of the Act.

[7] This column shows changes in payments from FY 1995 to FY 1996. It incorporates all of the changes displayed in columns 1 through 5. It also displays the impacts of the updates to the FY 1996 standardized amounts, change in hospitals' reclassification status in FY 1996 compared to FY 1995, and the difference in projected outlier payments from FY 1995 to FY 1996. The sum of the first five columns plus these effects may be slightly different from the percentage changes shown here, due to rounding errors and interactive effects.

B. The Impact of the Proposed Changes to the DRG Weights (Column 1)

In column 1 of Table I, we present the combined effects of the DRG reclassification and recalibration, as discussed in section II of the preamble to this proposed rule. Section 1886(d)(4)(C)(i) of the Act requires us each year to make appropriate classification changes and to recalibrate the DRG weights in order to reflect changes in treatment patterns, technology, and any other factors that may change the relative use of hospital resources. The impact of reclassification and recalibration on aggregate payments is required by section 1886(d)(4)(C)(iii) of the Act to be budget neutral.

The first row of Table I shows that the overall effect of these proposed changes is budget neutral. That is, the percentage change when adding the proposed FY 1996 GROUPER (version 13.0) to the FY 1996 baseline is 0.0. As described previously, all of the other payment parameters are held constant for the comparison in column 1, only the version of the GROUPER is different.

Consistent with the minor changes we are proposing for the FY 1996 GROUPER, the redistributional impacts across hospital groups are very small (an increase of 0.1 for large urban and rural hospitals). Among other hospital categories, the net effects are slightly positive changes for small (up to 200 beds) rural hospitals and slightly positive changes for larger urban hospitals. The largest single effect on any of the hospital categories examined is a 0.6 percent increase in payments for rural hospitals in Puerto Rico. This is a function of the fact that only five hospitals are included in this category, and one hospital has a 1.2 percent increase in its case-mix index value.

We also note that both urban and rural hospitals in the Middle Atlantic census division show a positive increase of 0.4 percent. We attribute this to the changes we proposed to our methodology for identifying statistical outliers that are trimmed from the data used to recalibrate the DRG weights (described in section II of the preamble to this proposed rule). In previous recalibrations, we trimmed all cases outside 3.0 standard deviations from the geometric mean of standardized charges *per case* for each DRG. In the proposed DRG recalibration set forth in this proposed rule, we eliminated only cases that met both the current criterion and an additional criterion that the cases fall outside 3.0 standard deviations from the geometric mean of standardized charges *per day* for each DRG. Because hospitals in the Middle Atlantic census division have longer lengths of stay (as demonstrated by the impacts of phasing out the day outliers—see the discussion below concerning column 5), they would be likely to have cases that exceed the per case threshold but not the per day threshold. Thus, costly cases previously trimmed would be left in the recalibration, thereby influencing the weights of the DRGs to which they are assigned.

Rural hospitals overall exhibit a positive effect in column 1. Because rural hospitals send out relatively more transfers, this effect is probably a reflection of the modification in the way we count transfer cases in the recalibration methodology (see section II of the preamble to this proposed rule). A study by the Rand Corporation for HCFA, ''An Evaluation of Medicare Payments for Transfer Cases'' (Contract Number 500–92–0023), identified 12 DRGs that account for more than half of all transfer cases. These DRGs experience a 7 percent increase in their average relative weights under the proposed recalibration, which contributes to the increases experienced by rural hospitals and select urban hospitals. The average change in the proposed weights of all DRGs from FY 1995 to FY 1996 is less than 1 percent.

C. The Impact of Updating the Wage Data (Column 2)

Section 1886(d)(3)(E) of the Act requires that, beginning October 1, 1993, we annually update the wage data used to calculate the wage index. In accordance with this requirement, the wage index for FY 1996 is based on data submitted for hospital cost reporting periods beginning on or after October 1, 1991 and before October 1, 1992. As with the previous column, the impact of the new data on hospital payments is isolated by holding the other payment parameters constant in the two simulations. That is, column 2 shows the percentage changes in payments when going from our FY 1996 baseline—using the FY 1995 wage index before geographic reclassifications based on 1991 wage data and incorporating the FY 1996 GROUPER—to a model substituting the FY 1996 pre-reclassification wage index based on 1992 wage data.

Section 1886(d)(3)(E) of the Act also requires that any updates or adjustments to the wage index be made in a manner that ensures that aggregate payments to hospitals are not affected by changes in the wage index. To comply with the requirements that the DRG and wage index changes be implemented in a budget neutral manner, we compute a budget neutrality adjustment factor to apply to the standardized amounts. For the FY 1996 proposed standardized amounts, this adjustment factor is 0.999174. This factor is applied to the standardized amounts to ensure that the overall effect of the wage index changes are budget neutral.

The results indicate that the new wage data do not have a significant overall impact on urban and rural hospitals. As discussed below, 94 percent of all prospective payment system hospitals would experience a change in their wage index of less than 5 percent. This column demonstrates that hospitals with significant changes in their wage indexes are not concentrated within any particular hospital group. For FY 1996, some of the largest changes are evident among both urban and rural hospitals grouped by census division. More census divisions experience payment increases, of greater magnitude, for rural hospitals than for urban hospitals. In most cases, payments changed by less than one percent. Although a degree of variation across census categories is evident in this column, our review of the wage data (as described below) indicates that most of the significant changes were attributable to improved reporting.

In the States and the District of Columbia, the greatest changes are

increases of 0.9 and 0.8 percent for rural hospitals in the East South Central and the Pacific census divisions, respectively, and a 0.7 percent decrease for urban hospitals in the Middle Atlantic region. This effect contributes to the 0.4 percent decline among major teaching hospitals—New York City's wage index falls by over 1 percent. The Middle Atlantic region also experiences a payment decrease of 0.5 percent for its rural hospitals. The Pacific region experiences an increase in payments to both urban and rural hospitals, with increases of 0.6 and 0.8 percent, respectively. In Puerto Rico, payments decline by 6.9 percent in five rural hospitals and increase 2.2 percent in urban hospitals. Of the six urban areas in Puerto Rico, five experience large increases in wage index values while only one experiences a slight decline.

The FY 1996 proposed wage index represents the third annual update to the wage data, and will continue to include salaries, fringe benefits, home office salaries, and certain contract labor salaries. In the past, updates to the wage data have resulted in significant payment shifts among hospitals. Since the wage index is now updated annually, we expect these payment fluctuations will be minimized.

Based on the proposed wage index calculation (after reclassifications under sections 1886(d)(8)(B) and 1886(d)(10) of the Act) compared to the FY 1995 wage index, there are more labor markets that experience an increase of 5 percent or more in their wage index values, and fewer labor markets that experience a significant decrease of 5 percent or more. We reviewed the data for any area that experienced a wage index change of 10 percent or more to determine the reason for the fluctuation. When necessary, we contacted the intermediaries to determine the validity of the data or to obtain an explanation for the change. The following chart compares the shifts in wage index values (after reclassifications) for labor markets for FY 1996 with those experienced as a result of last year's wage index update.

Percentage change in area wage index values	Number of labor market areas	
	FY 1996	FY 1995
Increase more than 10 percent	8	5
Increase between 5 and 10 percent	21	17
Decrease between 5 and 10 percent	8	13
Decrease more than 10 percent	3	10

Under the proposed FY 1996 wage index, 92.0 percent of rural prospective payment hospitals and 94.8 percent of urban hospitals would experience a change in their wage index value of less than 5.0 percent. Approximately 3.5 percent (2.1 percent of rural hospitals and 4.5 percent of urban hospitals) would experience a change of between 5 and 10 percent, and 2.7 percent (5.4 percent of rural hospitals and 0.6 percent of urban hospitals) would experience a change of more than 10 percent. The following chart shows the projected impact for urban and rural hospitals.

Percentage change in area wage index values	Percent of hospitals (by urban/rural)	
	Rural	Urban
Decrease more than 10 percent	1.7	0.1
Decrease between 5 and 10 percent	1.0	1.8
Change between -5 and +5 percent	92.0	94.8
Increase between 5 and 10 percent	1.1	2.7
Increase more than 10 percent	3.7	0.5

D. Transfer Changes (Column 3)

Column 3 of Table I shows the impacts of the change we are proposing in transfer payment policy. This change would revise our methodology for payment for transfer cases under the prospective payment system to more appropriately compensate transferring hospitals for the higher costs they incur, on average, on the first day of a hospital stay prior to transfer. Our current transfer policy pays a flat per diem amount for each day prior to transfer up to the full DRG amount. The per diem is calculated by dividing the full DRG amount by the geometric mean length of stay for that DRG. Our proposal is to replace this flat per diem methodology with a graduated methodology that would pay twice the per diem amount for the first day, and the per diem amount for each day beyond the first up to the full DRG amount.

The payment impacts shown in column 3 illustrate the effects of this change, relative to the baseline simulation based on current policy (a flat per diem transfer payment methodology). In order to simulate the effects of the proposed changes, it was first necessary to identify current transfer cases. Current transfers are identifiable by the discharge destination code on the patient bill (see the RAND study for a thorough discussion of identifying transfer cases on the MedPAR file).

Next, to determine whether payment would be made under the per diem methodology, we compared the actual length of stay prior to transfer to the geometric mean length of stay for the DRG to which the case is assigned. A full discharge or a transfer case that received the full discharge payment would be counted as 1.0, while, under our current transfer policy, a transfer case that stayed 2 days in a DRG with a geometric mean length of stay of 5 days would count as 0.4 of a discharge, and would be paid 40 percent of the full DRG amount. In this manner, transfer cases are counted only to the extent that the transferring hospital received payment for them. To simulate our proposed change to the per diem payment methodology, we added 1 day to the actual length of stay for transfer cases, thereby replicating paying double the per diem for the first stay and the flat per diem, up to the full DRG amount, for subsequent days.

Finally, we calculated transfer-adjusted case-mix indexes for each hospital. The adjusted case-mix indexes are calculated by summing the transfer-adjusted DRG weights and dividing by the transfer-adjusted number of cases. The transfer-adjusted DRG weights are calculated by multiplying the DRG weight by the lesser of 1 or the fraction of the length of stay for the case divided by the geometric mean length of stay for the DRG. By adjusting the DRG weights, nontransfer cases and transfer cases that have a length of stay at least as long as the geometric mean length of stay will be represented by the full DRG weight, while transfer cases with lengths of stay below the geometric mean length of stay for the DRG will be represented by a lower number, reflective of their payment.

The FY 1996 baseline model reflected in columns 1 and 2 incorporates transfer-adjusted discharges and case-mix indexes based on current policies. That is, cases transferred prior to reaching the geometric mean length of stay received payments based on the flat per diem. In column 3, our model substitutes transfer-adjusted discharges and case-mix indexes that reflect our proposed policy change.

The first row in column 3 shows that the net effect of our proposed change is budget neutral compared to total payments under current transfer policy. As specified in section 109 of the Social Security Act Amendments of 1994 (Pub. L. 103–432), the Secretary is authorized to make adjustments to the standardized amounts so that adjustments to the payment policy for transfer cases do not affect aggregate payments. As described in section II.A.4 of the Addendum to

this proposed rule, we applied a budget neutrality factor of 0.997583 to the standardized amounts to account for the higher payments going to transfer cases based on our proposal.

The distributional effects of these changes are to increase payments to rural hospitals by 0.3 percent and decrease urban hospitals' payments by less than 0.1 percent (the overall change is 0.0 percent). Rural hospitals clearly benefit from changing the per diem payment methodology. RAND found that rural hospitals as a whole transfer 4.5 percent of their patients, compared to 1.7 percent in large urban hospitals and 1.6 percent in other urban hospitals. Therefore, one would expect rural hospitals to benefit from the change to the per diem payment methodology.

The impact on small hospitals is also positive, consistent with RAND's finding that hospitals with fewer than 50 beds transfer 6.1 percent of their cases, and hospitals with 50 to 99 beds transfer 4.9 percent of cases. Rural hospitals with fewer than 50 beds receive a 0.6 percent increase in per case payments, and rural hospitals with 50 to 99 beds receive a 0.4 percent increase. Urban hospitals with fewer than 100 beds experience a 0.3 percent rise in payments. Among rural hospital groups, nonspecial status rural hospitals benefit by 0.6 percent.

E. Impacts of MGCRB Reclassifications (Column 4)

By March 30 of each year, the MGCRB makes reclassification determinations that will be effective for the next fiscal year, which begins on October 1. The MGCRB may reclassify a hospital to an urban area or a rural area with which it has a close proximity for the purpose of using the other area's standardized amount, wage index value, or both. (RRCs and SCHs are exempt from the proximity requirement.)

To this point, all of the simulation models have assumed hospitals are paid on the basis of their geographic location (with the exception of ongoing policies that provide that certain hospitals receive payments on bases other than where they are geographically located, such as RRCs and hospitals in rural counties that are deemed urban under section 1886(d)(8)(B) of the Act). The changes in column 4 reflect the per case payment impact of moving from this baseline to a simulation incorporating the MGCRB decisions for FY 1996. As noted above, these decisions affect hospitals' standardized amount and wage index area assignments. In addition, hospitals reclassified for the standardized amount also qualify to be treated as urban for purposes of the DSH adjustment.

The proposed FY 1996 standardized payment amounts and wage index values incorporate all of the MGCRB's reclassification decisions that will be effective for FY 1996. The wage index values also reflect any decisions made by the HCFA Administrator through the appeals and review process for MGCRB decisions as of March 14, 1995. Additional changes that result from the Administrator's review of MGCRB decisions will be reflected in the final rule implementing changes to the prospective payment system for FY 1996.

The overall effect of geographic reclassification is required to be budget neutral by section 1886(d)(8)(D) of the Act. Therefore, we applied an adjustment of 0.994125 to ensure that the effects of reclassification are budget neutral. (See section II.A.4 of the Addendum to this proposed rule).

As a group, rural hospitals benefit from geographic reclassification. Their payments rise 2.3 percent, while payments to urban hospitals decline 0.4 percent. Large urban hospitals lose 0.5 percent because, as a group, they have the smallest percentage of hospitals that are reclassified, fewer than 5 percent. There are enough hospitals in other urban areas that are reclassified to limit the decline in payments stemming from the budget neutrality offset to 0.1 percent. Among urban hospital groups generally, payments fall between 0.3 and 0.5 percent.

Rural hospitals that reclassify for the standardized amount and receive DSH payments experience a significant increase in payments as a result of receiving higher DSH payments as urban hospitals. Rural hospitals that reclassify to large urban areas and also receive DSH receive a 3.1 percent increase in payments. One percent of this change is due to the higher large urban rate, and the remaining 2.1 percent is due to DSH payments and to any wage index increase that hospitals reclassified for both the wage index and the standardized amount receive.

Rural hospitals reclassifying to other urban areas for the standardized amount receive an 8.4 percent increase in payments. Since there are no longer separate rural and other urban rates, this large increase is attributable to the higher DSH payments these 53 hospitals receive as a result of being classified as urban (as well as any increase in the wage index for those hospitals reclassified for both the wage index and the standardized amount). Under our proposed revision to the rules for MGCRB reclassification, these hospitals would no longer be eligible to reclassify solely to receive higher DSH payments effective with reclassifications for FY 1997.

Among rural hospitals designated as RRCs, 54 hospitals are reclassified for the wage index only and experience a 5 percent increase in payments overall. This positive impact on RRCs is also reflected in the category of rural hospitals with 200 or more beds, which have a 4.8 percent increase in payments.

Rural hospitals reclassified for FY 1995 and FY 1996 experience an 8.1 percent increase in payments, the greatest of any group in the category. This may be due to the fact that these hospitals have the most to gain from reclassification and have been reclassified for a period of years. Rural hospitals reclassified for FY 1996 alone experience a 3.7 percent increase in payments. Urban hospitals reclassified for FY 1995 but not FY 1996 experience a 2.2 percent decline in payments overall. This appears to be due to the combined impacts of the budget neutrality adjustment and a number of hospitals in this category that experience a 6 percent drop in their wage index after reclassification. Urban hospitals reclassified for FY 1996 but not for FY 1995 experience a 2.3 percent increase in payments.

The FY 1996 reclassification section of Table I shows the changes in payments per case for all FY 1996 reclassified and nonreclassified hospitals in urban and rural locations for each of the three reclassification categories (standardized amount only, wage index only, or both). The table illustrates that the large impact for reclassified rural hospitals is due to reclassifications for both the standardized amount and the wage index. These hospitals receive a 10.6 percent increase. In addition, rural hospitals reclassified for the wage index receive an 8.5 percent payment increase. The overall impact on reclassified hospitals is to increase their payments per case by an average of 4.1 percent for FY 1996.

The reclassification of hospitals primarily affects payment to nonreclassified hospitals through changes in the wage index and the geographic reclassification budget neutrality adjustment required by section 1886(d)(8)(D) of the Act. Among hospitals that are not reclassified, the overall impact of hospital reclassifications is an average decrease in payments per case of about 0.6 percent, which corresponds closely with the geographic reclassification budget neutrality factor. Rural nonreclassified hospitals decrease slightly less,

experiencing a 0.2 percent decrease. This occurs because the wage index values in some rural areas increase after reclassified hospitals are excluded from the calculation of those index values.

The number of reclassifications for the standardized amount, or for both the standardized amount and the wage index, has declined from 496 in FY 1995 to 358 in FY 1996. This is not surprising because of the elimination of the separate rural amount. Some of these rural hospitals are reclassifying for the large urban amount, thereby receiving a payment rate even higher than they would receive from the other national standardized amount. Rural hospitals also may be reclassifying for the standardized amount even though they are only eligible to reclassify to an other urban area either to meet the lower eligibility requirements for DSH payments, or to receive higher DSH payments. The payment impact upon hospitals reclassifying for the standardized amount only, however, is significantly lower than it is for hospitals reclassifying either for the wage index alone or for both the wage index and the standardized amount.

The foregoing analysis was based on MGCRB and HCFA Administrator decisions made by March 14 of this year. As previously noted, there may be changes to some MGCRB decisions through the appeals and review process. The outcome of these cases will be reflected in the analysis presented in the final rule.

F. Outlier Changes (Column 5)

Medicare provides extra payment in addition to the regular DRG payment amount for extremely costly or extraordinarily lengthy cases (cost outliers and day outliers, respectively). Section 1886(d)(5)(A)(v) of the Act requires the Secretary to phase out payment for day outliers from FY 1994 day outlier levels in 25 percent increments beginning in FY 1995. Day outliers in FY 1996 should account for approximately 16 percent of total outlier payments (50 percent of 1994 levels). This reduction in day outlier payments will be offset by an increase in payments for cost outliers. As discussed in the Addendum, for FY 1996, we are proposing a day outlier threshold equal to the geometric mean length of stay for each DRG plus the lesser of 23 days or 3.0 standard deviations. The proposed marginal cost factor for day outliers is 45 percent.

The statute also authorizes the Secretary to set a fixed loss threshold for cost outliers. For FY 1996, we are proposing that a case would receive cost outlier payments if its costs exceed the DRG amount plus $16,700. We are also proposing to maintain the marginal cost factor for cost outliers at 80 percent.

The payment impacts of these changes are minimal. The largest impacts appear to be related to geographic location in terms of census divisions. Urban hospitals in the Middle Atlantic census division have payment reductions of 0.7 percent per case. Rural Middle Atlantic hospitals have a 0.2 percent decline. In New England, urban hospitals experience decreases of 0.2 percent. Since the changes to outlier policy result in a shift in payments from cases paid as day outliers to cases paid as cost outliers, this indicates that these areas have higher percentages of day outliers. This is consistent with our previous analysis indicating above average impacts related to day outlier policy changes in the northeastern portion of the country (see the June 4, 1992 proposed rule, 57 FR 23824).

The largest negative impact occurs among hospitals for which we could not determine Medicare utilization rates. This group experiences a 1.3 percent fall in payments per case. The bulk of the decline is attributable to a group of New York hospitals included in this category that experience significant drops in outlier payments.

G. All Changes (Column 6)

Column 6 compares our estimate of payments per case for FY 1996 to our estimate of payments per case in FY 1995. It includes the 1.5 percent update to the standardized amounts and the hospital-specific rates for SCHs and EACHs, and the 0.9 percent lower than estimated outlier payments during FY 1995, as described in the introduction and the Addendum.

A single geographic reclassification budget neutrality factor of 0.994125 was applied to the proposed FY 1996 standardized amounts, compared to the FY 1995 factor of 0.994055. The budget neutrality adjustment factor for the updated wage index and the DRG recalibration is 0.999174, compared to the FY 1995 factor of 0.998050. Although the net effect of these changes is small, they are reflected in the payment differences shown in this column.

There may also be interactive effects among the various factors comprising the payment system that we are not able to isolate. For these reasons, the values in column 6 may not equal the sum of the previous columns plus the other impacts that we are able to identify.

We also note that column 6 includes the impacts of FY 1995 geographic reclassifications compared to the payment impacts of FY 1996 reclassifications. Therefore, the percent changes due to FY 1996 reclassifications shown in column 4 need to be offset by the effects of reclassification on hospitals' FY 1995 payments. For example, the impact of MGCRB reclassifications on rural hospitals' FY 1995 payments was approximately a 2.0 percent increase, compared to a 2.3 percent increase for FY 1996. Therefore, the net increase in FY 1996 payments due to reclassification is 0.3 percent.

The overall payment increase from FY 1996 to FY 1995 for all hospitals is a 2.4 percent increase. This reflects the 0.0 percent net change in total payments due to the proposed changes for FY 1996 shown in columns 1 through 5, the 1.5 percent update for FY 1996, and the 0.9 percent higher outlier payments in FY 1996 compared to FY 1995, as discussed above.

Hospitals in rural areas experience the largest payment increase, a 2.9 percent rise in payments per case over FY 1995. The increase in estimated outlier payments over FY 1995 for rural hospitals is 0.5 percent, below the 0.9 percent difference for all hospitals. As noted above, the net increase for rural hospitals in FY 1996 due to geographic reclassification is 0.3 percent. They also benefit from DRG recalibration, the new wage index, and the change in the transfer payment policy.

Urban hospitals' overall payments increase 2.3 percent. Hospitals in large and other urban areas experience 2.1 percent and 2.8 percent increases, respectively. Both large and other urban hospitals experience 0.9 percent increases in payments for FY 1996 due to the larger outlier payout, plus the 1.5 percent update. In addition, large urban hospitals' 0.5 percent decline due to reclassification is identical to the FY 1995 impact of reclassification, thus the net impact is 0.0. The FY 1995 reclassification impact on other urban hospitals was a 0.2 percent decline, compared to the 0.1 percent decline in column 4 of Table I, for a net increase of 0.1 percent from FY 1995 to FY 1996.

Among urban bed size groups, column 6 shows changes in payments are higher for the smallest urban hospitals compared to larger urban hospitals. The relatively smaller increases for the larger urban hospitals appears to be due to the negative impacts of the new wage data, as shown in column 2, and to the new transfer policy (column 4). Among rural bed size groups the impacts are less varied, ranging from 2.7 percent to 3.1 percent.

Greater variation is evident in the impacts displayed for the urban/rural census divisions, ranging from a 4.5 percent increase to a 4.2 percent

decrease, respectively, for hospitals in urban and rural Puerto Rico. These impacts are primarily attributable to the effects of the new wage data, as discussed above. Other census divisions below the average payment increase are urban Middle Atlantic, urban West North Central, and rural Mountain (all increase less than 2.0 percent). The reason for the relatively small increase for urban hospitals in the Middle Atlantic is that they have sizeable negative impacts due to the new wage data and the phase-out of day outliers. Urban hospitals in the West North Central division also experience a negative impact from the new wage data. Rural hospitals in the Mountain division appear to have a lower percentage increase than other hospitals primarily because they have a smaller percentage increase in outlier payments than other hospitals (0.4 percent).

Conversely, rural New England hospitals experience a 3.6 percent increase. They have a 0.5 percent net increase over FY 1995 due to reclassification, and a 0.7 percent increase due to the new wage data. West South Central hospitals have the second largest payment increase (behind Puerto Rico hospitals) among urban divisions (3.2 percent).

Except for rural Puerto Rico, the only other hospital groups with negative payment impacts from FY 1995 to FY 1996 are hospitals that were reclassified during FY 1995 and are not reclassified for FY 1996. Overall, these hospitals lose 1.2 percent, with 58 urban hospitals in this category losing 1.6 percent and 162 rural hospitals losing 0.4 percent. On the other hand, hospitals reclassified for FY 1996 that were not reclassified for FY 1995 would experience the greatest payment increase: 7.4 percent for 34 urban hospitals in this category and 6.8 percent for 119 rural hospitals.

Reclassification appears to be a significant factor influencing the payment increases for a number of rural hospital groups with above average overall payment increases in column 6. For example, among hospital groups identified in the discussion of the impacts of MGCRB reclassifications for FY 1996 (column 4), almost all have overall increases of 3.0 or greater. This outcome highlights the redistributive effects of reclassification decisions upon hospital payments. This impact is illustrated even more clearly when one examines the rows categorizing hospitals by their reclassification status for FY 1996. All nonreclassified hospitals have an average payment increase of 2.3 percent. The average payment increase for all reclassified hospitals is 3.5 percent.

Major teaching hospitals with 100 or more residents have a payment increase of only 1.8 percent. This is attributable to the combined negative impacts of the new wage data, reclassification, and the continued phase-out of day outliers. As discussed above, teaching hospitals located in New York City account for much of this impact. (They also account for much of the below average increase for hospitals for which we do not have Medicare utilization data (1.0 percent increase), along with several Puerto Rican hospitals.)

Finally, among SCH/EACHs, and SCH/EACH and RRCs, the payment increase is 1.9 percent. The primary reason for this below average increase is that there is minimal impact upon these hospitals from the higher FY 1996 outlier payments. Because these hospital groups receive their hospital-specific rate if it exceeds the applicable Federal amount (including outliers), there is less of an impact due to changes in outlier payment levels, which are not applied to the hospital-specific rate.

TABLE II.—IMPACT ANALYSIS OF CHANGES FOR FY 1996 OPERATING PROSPECTIVE PAYMENT SYSTEM

[Payments per Case]

	No. of hospitals (1)	Average FY 1995 payment per case (2) [1]	Average FY 1996 payment per case (3) [1]	All changes (4)
(By Geographic Location)				
All Hospitals	5,154	6,255	6,405	2.4
Urban Hospitals	2,895	6,749	6,906	2.3
Large Urban Areas	1,622	7,252	7,401	2.1
Other Urban Areas	1,273	6,061	6,228	2.8
Rural Areas	2,259	4,259	4,382	2.9
Bed Size (Urban)				
0–99 Beds	716	4,613	4,734	2.6
100–199 Beds	918	5,708	5,863	2.7
200–299 Beds	601	6,267	6,421	2.5
300–499 Beds	480	7,138	7,297	2.2
500 or More Beds	180	8,779	8,952	2.0
Bed Size (Rural)				
0–49 Beds	1,171	3,516	3,630	2.9
50–99 Beds	664	3,961	4,084	3.1
100–149 Beds	230	4,439	4,568	2.9
150–199 Beds	108	4,545	4,665	2.6
200 or More Beds	86	5,213	5,356	2.7
Urban by Census Div.				
New England	163	7,172	7,318	2.0
Middle Atlantic	440	7,429	7,555	1.7
South Atlantic	431	6,423	6,576	2.4
East North Central	481	6,493	6,657	2.5
East South Central	164	5,917	6,065	2.5
West North Central	196	6,421	6,538	1.8
West South Central	371	6,225	6,425	3.2

TABLE II.—IMPACT ANALYSIS OF CHANGES FOR FY 1996 OPERATING PROSPECTIVE PAYMENT SYSTEM—Continued

[Payments per Case]

	No. of hospitals (1)	Average FY 1995 payment per case (2) [1]	Average FY 1996 payment per case (3) [1]	All changes (4)
Mountain	119	6,543	6,677	2.0
Pacific	483	7,771	7,982	2.7
Puerto Rico	47	2,472	2,583	4.5
Rural by Census Div.				
New England	53	5,135	5,318	3.6
Middle Atlantic	84	4,714	4,827	2.4
South Atlantic	297	4,395	4,518	2.8
East North Central	305	4,245	4,388	3.4
East South Central	275	3,819	3,942	3.2
West North Central	527	4,021	4,126	2.6
West South Central	352	3,846	3,955	2.9
Mountain	218	4,775	4,864	1.9
Pacific	143	5,309	5,487	3.3
Puerto Rico	5	1,964	1,882	−4.2
(By Payment Categories)				
Urban Hospitals	3,106	6,659	6,815	2.3
Large Urban Areas	1,815	7,093	7,247	2.2
Other Urban Areas	1,291	5,962	6,123	2.7
Rural Areas	2,048	4,218	4,340	2.9
Teaching Status				
Non-Teaching	4,104	5,160	5,301	2.7
Fewer Than 100 Residents	826	6,708	6,862	2.3
100 or More Residents	224	10,342	10,527	1.8
Disproportionate Share Hospitals (DSH)				
Non-DHS	3,223	5,506	5,649	2.6
Urban DSH				
100 Beds or More	1,302	7,389	7,548	2.2
Fewer Than 100 Beds	112	4,818	4,968	3.1
Reclass. Rural DSH				
Large Urban and DSH	54	6,345	6,562	3.4
DSH Only	53	4,354	4,472	2.7
Rural DSH				
Sole Community (SCH)	137	4,638	4,719	1.8
Referral Centers (RRC)	40	5,193	5,347	3.0
Other Rural DSH Hosp.				
100 Beds or More	83	4,019	4,149	3.2
Fewer Than 100 Beds	150	3,257	3,363	3.3
Urban Teaching and DSH				
Both Teaching and DSH	653	8,333	8,498	2.0
Teaching and No DSH	350	6,914	7,075	2.3
No Teaching and DSH	868	5,852	6,007	2.6
No Teaching and No DSH	1,235	5,278	5,421	2.7
Rural Hospital Types				
Nonspecial Status Hospitals	1,279	3,595	3,718	3.4
RRC	111	4,801	4,963	3.4
SCH/EACH	612	4,704	4,794	1.9
SCH/EACH and RRC	46	5,590	5,695	1.9
Type of Ownership				
Voluntary	3,095	6,422	6,573	2.3
Proprietary	725	5,686	5,831	2.6
Government	1,334	5,812	5,966	2.7
Medicare Utilization as a Percent of Inpatient Days				
0–25	268	8,390	8,578	2.2
25–50	1,357	7,523	7,690	2.2
50–65	2,227	5,734	5,880	2.5
Over 65	1,234	4,936	5,066	2.6
Unknown	68	8,184	8,266	1.0

TABLE II.—IMPACT ANALYSIS OF CHANGES FOR FY 1996 OPERATING PROSPECTIVE PAYMENT SYSTEM—Continued

[Payments per Case]

	No. of hospitals (1)	Average FY 1995 payment per case (2) [1]	Average FY 1996 payment per case (3) [1]	All changes (4)
Hospitals Reclassified by the Medicare Geographic Review Board Reclassification Status During FY95 and FY96				
Reclassified During Both FY95 and FY96	465	5,739	5,894	2.7
Urban	175	6,581	6,748	2.5
Rural	290	4,759	4,899	2.9
Reclassified During FY96 Only	153	5,203	5,572	7.1
Urban	34	6,561	7,049	7.4
Rural	119	4,416	4,716	6.8
Reclassified During FY95 Only	220	5,726	5,658	−1.2
Urban	58	7,051	6,939	−1.6
Rural	162	4,242	4,225	−0.4
FY 96 Reclassifications				
All Reclassified Hosp.	618	5,630	5,828	3.5
Stand. Amt. Only	213	5,060	5,203	2.8
Wage Index Only	260	5,769	6,018	4.3
Both	145	6,054	6,248	3.2
Nonreclass.	4,509	6,359	6,502	2.3
All Urban Reclass.	209	6,578	6,793	3.3
Stand. Amt. Only	69	5,834	6,013	3.1
Wage Index Only	37	8,402	8,730	3.9
Both	103	6,338	6,531	3.0
Nonreclass.	2,686	6,764	6,916	2.2
All Rural Reclass.	409	4,670	4,852	3.9
Stand. Amt. Only	144	4,235	4,339	2.5
Wage Index Only	223	4,831	5,051	4.6
Both	42	5,016	5,214	4.0
Nonreclass.	1,823	4,045	4,138	2.3
Other Reclassified Hospitals (Section 1886(d)(8)(B))	27	4,391	4,513	2.8

[1] These payment amounts per case do not reflect any estimates of annual case mix increase.

Table II presents the projected average payments per case under the changes for FY 1996 for urban and rural hospitals and for the different categories of hospitals shown in Table I. It compares the projected payments per case for FY 1996 with the average estimated per case payments for FY 1995. Thus, this table presents, in terms of the average dollar amounts paid per discharge, the combined effects of the changes presented in Table I. The percentage changes shown in the last column of Table I equal the percentage changes in average payments from column 6 of Table I.

VII. Impact of Proposed Changes in the Capital Prospective Payment System

A. General Considerations

We now have data that were unavailable in previous impact analyses for the capital prospective payment system. Specifically, we have cost report data for the second year of the capital prospective payment system (cost reports beginning in FY 1993) available through the December 1994 update of the Hospital Cost Report Information System (HCRIS). We also have information on the projected aggregate amount of obligated capital approved by the fiscal intermediaries. However, our impact analysis of payment changes for capital-related costs is still limited by the lack of hospital-specific data on several items. These are the hospital's projected new capital costs for each year, its projected old capital costs for each year, and the actual amounts of obligated capital that will be put in use for patient care and recognized as Medicare old capital costs in each year. The lack of such information affects our impact analysis in the following ways:

- Major investment in hospital capital assets (for example in building and major fixed equipment) occurs at irregular intervals. As a result, there can be significant variation in the growth rates of Medicare capital-related costs per case among hospitals. We do not have the necessary hospital-specific budget data to project the hospital capital growth rate for an individual hospital.
- Moreover, our policy of recognizing certain obligated capital as old capital makes it difficult to project future capital-related costs for individual hospitals. Under § 412.302(c), a hospital is required to notify its intermediary that it has obligated capital by the later of October 1, 1992, or 90 days after the beginning of the hospital's first cost reporting period under the capital prospective payment system. The intermediary must then notify the hospital of its determination whether the criteria for recognition of obligated capital have been met by the later of the end of the hospital's first cost reporting period subject to the capital prospective payment system or 9 months after the receipt of the hospital's notification. The amount that is recognized as old capital is limited to the lesser of the actual allowable costs when the asset is put in use for patient care or the estimated costs of the capital expenditure at the time it was obligated. We have substantial information regarding intermediary determinations of projected aggregate obligated capital amounts. However, we still do not know when these projects will actually be put into use for patient care, the amount

that will be recognized as obligated capital when the project is put into use, or the Medicare share of the recognized costs. Therefore, we do not know actual obligated capital commitments to be used in the FY 1996 capital cost projections. We discuss in Appendix B the assumptions and computations we employ to generate the amount of obligated capital commitments for use in the FY 1996 capital cost projections.

In Table III of this appendix, we present the redistributive effects that are expected to occur between ''hold-harmless'' hospitals and ''fully prospective'' hospitals in FY 1996. In addition, we have integrated sufficient hospital-specific information into our actuarial model to project the impact of the proposed FY 1996 capital payment policies by the standard prospective payment system hospital groupings. We caution that while we now have actual information on the effects of the transition payment methodology and interim payments under the capital prospective payment system and cost report data for most hospitals, we need to randomly generate numbers for the change in old capital costs, new capital costs for each year, and obligated amounts that will be put in use for patient care services and recognized as old capital each year. This means that we continue to be unable to predict accurately an individual hospital's FY 1996 capital costs; however, with the more recent data on the experience to date under the capital prospective payment system, there is adequate information to estimate the aggregate impact on most hospital groupings.

We present the transition payment methodology by hospital grouping in Table IV. In Table V we present the results of the cross-sectional analysis using the results of our actuarial model. This table presents the aggregate impact of the FY 1996 payment policies.

B. Projected Impact Based on the Proposed FY 1996 Actuarial Model

1. Assumptions

In this impact analysis, we model dynamically the impact of the capital prospective payment system from FY 1995 to FY 1996 using a capital acquisition model. The FY 1996 model, described in Appendix B of this proposed rule, integrates actual data from individual hospitals with randomly generated capital cost amounts. We have capital cost data from cost reports beginning in FY 1989 through FY 1993 received through the December 1994 update of the Hospital Cost Reporting Information System (HCRIS), interim payment data for hospitals already receiving capital prospective payments through PRICER, and data reported by the intermediaries that include the hospital-specific rate determinations that have been made through January 1, 1995 in the Provider-Specific file. We used this data to determine the proposed FY 1996 capital rates. However, we do not have individual hospital data on old capital changes, new capital formation, and actual obligated capital costs. We have data on costs for capital in use in FY 1993, and we age that capital by a formula described in Appendix B. We therefore need to randomly generate only new capital acquisitions for any year after FY 1993. All Federal rate payment parameters are assigned to the applicable hospital.

For purposes of this impact analysis, the FY 1996 actuarial model includes the following assumptions:

- Medicare inpatient capital costs per discharge will increase at the following rates during these periods:

AVERAGE PERCENTAGE INCREASE IN CAPITAL

Fiscal year	Costs per discharge
1995	4.61
1996	4.93

- The Medicare case-mix index will increase by 0.8 percent in FY 1995 and FY 1996.
- The Federal capital rate as well as the hospital-specific rate will be updated by an analytical framework that considers changes in the prices associated with capital-related costs, and adjustments to account for forecast error, changes in the case-mix index, allowable changes in intensity, and other factors. The proposed FY 1996 update for inflation is 1.50 percent (see Addendum, Part III).

2. Results

We have used the actuarial model to estimate the change in payment for capital-related costs from FY 1995 to FY 1996. Table III shows the effect of the capital prospective payment system on low capital cost hospitals and high capital cost hospitals. We consider a hospital to be a low capital cost hospital if, based on a comparison of its initial hospital-specific rate and the applicable Federal rate, it will be paid under the fully prospective payment methodology. A high capital cost hospital is a hospital that, based on its initial hospital-specific rate, will be paid under the hold-harmless payment methodology. Based on our actuarial model, the breakdown of hospitals is as follows:

CAPITAL TRANSITION PAYMENT METHODOLOGY

Type of hospital	Percent of hospitals	FY 1996 percent of discharges	FY 1996 percent of capital costs	FY 1996 percent of capital payments
Low cost hospital	66	62	51	55
High cost hospital	34	38	49	45

A low capital cost hospital may request to have its hospital-specific rate redetermined based on old capital costs in the current year, through the later of the hospital's cost reporting period beginning in FY 1994 or the first cost reporting period beginning after obligated capital comes into use (within the limits established in § 412.302(e) for putting obligated capital in use for patient care). If the redetermined hospital-specific rate is greater than the adjusted Federal rate, these hospitals will be paid under the hold-harmless payment methodology. Regardless of whether the hospital became a hold-harmless payment hospital as a result of a redetermination, we have continued to show these hospitals as low capital cost hospitals in Table III.

Assuming no behavioral changes in capital expenditures, Table III displays the percentage change in payments from FY 1995 to FY 1996 using the above described actuarial model.

TABLE III.—IMPACT OF PROPOSED CHANGES FOR FY 1996 ON PAYMENTS PER DISCHARGE

	No. of hospitals	Discharges	Adjusted federal payment	Average federal percent	Hospital specific payment	Hold-harmless payment	Exceptions payment	Total payment	Percent change
FY 1995 payments per discharge									
Low Cost Hospitals	3,393	6,548,545	$260.45	43.42	$191.07	$47.69	$15.33	$514.53	.....
Fully Prospective	1,621	3,140,867	237.50	40.00	228.18	.....	4.62	470.30	.....
Rebase—Fully Prospective	1,408	2,487,365	238.66	40.00	214.90	.....	33.06	486.61	.....
Rebase—100% Federal Rate	179	483,766	642.82	100.00	.....	.....	2.50	645.31	.....
Rebase—Hold Harmless	185	436,547	125.96	20.48	.....	715.40	5.56	846.93	.....
High Cost Hospitals	1,758	4,081,014	360.03	57.60	.....	377.33	4.14	741.50	.....
100% Federal Rate	689	1,744,966	647.48	100.00	.....	.....	0.00	647.48	.....
Hold Harmless	1,069	2,336,048	145.31	23.89	.....	659.19	7.23	811.73	.....
Total Hospitals	5,151	10,629,560	298.68	49.00	117.71	174.25	11.03	601.67	.....
FY 1996 payments per discharge									
Low Cost Hospitals	3,393	6,548,545	$392.98	53.57	$194.75	$39.42	$12.98	$642.41	24.85
Fully Prospective	1,621	3,140,867	363.00	50.00	232.57	.....	3.97	601.56	27.91
Rebase—Fully Prospective	1,408	2,487,365	364.77	50.00	219.04	.....	26.50	611.94	25.75
Rebase—100% Federal Rate	226	602,562	780.03	100.00	.....	.....	8.25	795.17	23.22
Rebase—Hold Harmless	138	317,751	176.09	23.46	.....	812.48	5.20	995.06	17.49
High Cost Hospitals	1,758	4,081,014	562.98	73.70	.....	279.77	3.65	856.74	15.54
100% Federal Rate	991	2,528,050	779.48	100.00	.....	.....	0.00	792.32	22.37
Hold Harmless	767	1,552,965	210.53	28.51	.....	735.20	9.59	961.60	18.46
Total Hospitals	5,151	10,629,560	458.25	61.49	119.98	131.70	9.40	724.70	20.45

Under section 1886(g)(1)(A) of the Act, estimated aggregate payments under the capital prospective payment system for FY 1992 through 1995 respectively, are to equal 90 percent of estimated payments that would have been payable on a reasonable cost basis in each year. With the expiration of the capital budget neutrality provision, we estimate that there will be an aggregate 20.45 percent increase in FY 1996 Medicare capital payments over the FY 1995 payments.

We project that low capital cost hospitals paid under the fully prospective payment methodology will experience an average increase in payments per case of 24.85 percent, and high capital cost hospitals will experience an average increase of 15.54 percent.

For hospitals paid under the fully prospective payment methodology, the Federal rate payment percentage will increase from 40 percent to 50 percent and the hospital-specific rate payment percentage will decrease from 60 to 50 percent in FY 1996.

The Federal rate payment percentage for a hospital paid under the hold-harmless payment methodology is based on the hospital's ratio of new capital costs to total capital costs. The average Federal rate payment percentage for hospitals receiving a hold-harmless payment for old capital will increase from 23.89 percent to 28.51 percent. We estimate the percentage of hold-harmless hospitals paid based on 100 percent of the Federal rate will increase from 41 percent to 57 percent.

Despite the reduction in the hospital-specific rate blend percentage from 60 percent in FY 1995 to 50 percent in FY 1996, we expect that the average hospital-specific rate payment per discharge will increase from $117.71 in FY 1995 to $119.98 in FY 1996. This is due to the large increase (21.34 percent) in the FY 1996 hospital-specific rate compared to FY 1995.

We are proposing no changes in our exceptions policies for FY 1996. As a result, the minimum payment levels would be:

- 90 percent for sole community hospitals;
- 80 percent for urban hospitals with 100 or more beds and a disproportionate share patient percentage of 20.2 percent or more; or
- 70 percent for all other hospitals.

We estimate that exceptions payments will decrease from 1.83 percent of total capital payments in FY 1995 to 1.30 percent of payments in FY 1996. This is due to the large increase in the rates—as rate-based payments increase, exceptions payments decrease. The projected distribution of the payments is shown in the table below:

ESTIMATED FY 1996 EXCEPTIONS PAYMENTS

Type of hospital	No. of hospitals	Percent of exceptions payments
Low capital cost	209	85

ESTIMATED FY 1996 EXCEPTIONS PAYMENTS—Continued

Type of hospital	No. of hospitals	Percent of exceptions payments
High capital cost	124	15
Total	333	100

C. Cross-Sectional Comparison of Capital Prospective Payment Methodologies

Table IV presents a cross-sectional summary of hospital groupings by capital prospective payment methodology. This distribution is generated by our actuarial model.

TABLE IV.—DISTRIBUTION BY METHOD OF PAYMENT (HOLD-HARMLESS/FULLY PROSPECTIVE) OF HOSPITALS RECEIVING CAPITAL PAYMENTS

	(1) Total No. of hospitals	(2) Hold-harmless		(3) Percentage paid fully prospective rate
		Percentage paid hold-harmless (A)	Percentage paid fully federal (B)	
By Geographic Location:				
All hospitals	5,151	17.6	23.6	58.8
Large urban areas (populations over 1 million)	1,620	20.1	31.5	48.5
Other urban areas (populations of 1 million of fewer)	1,273	22.5	27.4	50.1
Rural areas	2,258	13.0	15.9	71.1
Urban hospitals	2,893	21.1	29.7	49.2
0–99 beds	715	21.8	24.1	54.1
100–199 beds	917	25.0	31.5	43.5
200–299 beds	601	21.1	31.6	47.3
300–499 beds	480	16.5	31.0	52.5
500 or more beds	180	11.1	32.8	56.1
Rural hospitals	2,258	13.0	15.9	71.1
0–49 beds	1,170	10.2	10.7	79.1
50–99 beds	664	14.5	19.0	66.6
100–149 beds	230	20.0	27.0	53.0
150–199 beds	108	18.5	19.4	62.0
200 or more beds	86	15.1	27.9	57.0
By Region:				
Urban by Region	2,893	21.1	29.7	49.2
New England	163	7.4	25.2	67.5
Middle Atlantic	440	11.6	30.5	58.0
South Atlantic	431	25.8	34.6	39.7
East North Central	481	15.4	25.8	58.8
East South Central	164	31.7	27.4	40.9
West North Central	195	23.6	24.6	51.8
West South Central	371	37.5	36.9	25.6
Mountain	119	21.0	37.8	41.2
Pacific	482	18.9	27.0	54.1
Puerto Rico	47	21.3	12.8	66.0
Rural by Region	2,258	13.0	15.9	71.1
New England	53	7.5	15.1	77.4
Middle Atlantic	84	9.5	15.5	75.0
South Atlantic	297	14.5	22.9	62.6
East North Central	305	11.8	9.8	78.4
East South Central	275	14.9	26.2	58.9
West North Central	527	10.2	10.8	78.9
West South Central	351	13.4	19.9	66.7
Mountain	218	15.1	11.9	72.9
Pacific	143	19.6	9.1	71.3
By Payment Classification:				
All hospitals	5,151	17.6	23.6	58.8
Large urban areas (populations over 1 million)	1,813	19.5	31.2	49.3
Other urban areas (populations of 1 million or fewer)	1,291	22.7	27.0	50.3
Rural areas	2,047	12.5	14.8	72.6
Teaching Status:				
Non-teaching	4,101	18.0	22.7	59.3
Fewer than 100 Residents	826	17.3	27.2	55.4
100 or more Residents	224	9.8	28.1	62.1
Disproportionate share hospitals (DSH):				
Non-DSH	3,220	17.4	20.2	62.5
Urban DSH:				
100 or more beds	1,387	19.1	32.7	48.2
Less than 100 beds	134	21.6	25.4	53.0

TABLE IV.—DISTRIBUTION BY METHOD OF PAYMENT (HOLD-HARMLESS/FULLY PROSPECTIVE) OF HOSPITALS RECEIVING CAPITAL PAYMENTS—Continued

	(1) Total No. of hospitals	(2) Hold-harmless		(3) Percentage paid fully prospective rate
		Percentage paid hold-harmless (A)	Percentage paid fully federal (B)	
	(1)	(2) [1]	(3) [1]	(4)
Rural DSH:				
Sole community (SCH/EACH)	137	14.6	10.2	75.2
Referral Center (RRC/EACH)	40	12.5	20.0	67.5
Other Rural:				
100 or more beds	83	19.3	30.1	50.6
Less than 100 beds	150	6.7	22.0	71.3
Urban teaching and DSH:				
Both teaching and DSH	653	13.5	30.3	56.2
Teaching and no DSH	350	18.3	24.6	57.1
No teaching and DSH	868	23.7	33.4	42.9
No teaching and no DSH	1,233	23.4	27.6	49.0
Rural Hospital Types:				
Non special status hospitals	1,278	9.4	15.9	74.7
RRC/EACH	111	17.1	22.5	60.4
SCH/EACH	612	18.0	10.9	71.1
SCH, RRC and EACH	46	19.6	17.4	63.0
Type of Ownership:				
Voluntary	3,092	16.8	24.1	59.1
Proprietary	725	31.6	38.6	29.8
Government	1,334	11.8	14.4	73.8
Medicare Utilization as a Percent of Inpatient Days:				
0–25	268	26.1	19.4	54.5
25–50	1,357	19.7	28.5	51.7
50–65	2,227	17.1	23.7	59.2
Over 65	1,234	14.6	18.6	66.8

As we explain in Appendix B, we were not able to determine a hospital-specific rate for 3 of the 5,154 hospitals in our data base. Consequently, the payment methodology distribution is based on 5,151 hospitals. This data should be fully representative of the payment methodologies that will be applicable to hospitals.

The cross-sectional distribution of hospital by payment methodology is presented by: (1) geographic location, (2) region, and (3) payment classification. This provides an indication of the percentage of hospitals within a particular hospital grouping that will be paid under the fully prospective payment methodology and under the hold-harmless methodology.

The percentage of hospitals paid fully Federal (100 percent of Federal rate) is expected to increase to 23.6 percent in FY 1996. The expiration of the budget neutrality provision resulted in a large rate increase in the capital Federal rate. This large increase means more hold-harmless hospitals will fare better under the fully Federal payment method.

Table IV indicates that 58.8 percent of hospitals are paid under the fully prospective payment methodology. (This figure, unlike the figure of 66 percent for low cost capital hospitals in the previous section, takes account of the effects of redeterminations. In other words, this figure does not include low cost hospitals that, following a hospital-specific rate redetermination, are now paid under the hold-harmless methodology.) As expected, a relatively higher percentage of rural and governmental hospitals (72.6 percent and 73.8 percent, respectively by payment classification) are being paid under the fully prospective methodology. This is a reflection of their lower than average capital costs per case. In contrast, only 29.8 percent of proprietary hospitals are being paid under the fully prospective methodology. This is a reflection of their higher than average capital costs per case. (We found at the time of the August 30, 1991 final rule (56 FR 43430) that 62.7 percent of proprietary hospitals had a capital cost per case above the national average cost per case.)

D. Cross-Sectional Analysis of Changes in Aggregate Payments

We used our FY 1996 actuarial model to estimate the potential impact of our proposed changes for FY 1996 on total capital payments per case, using a universe of 5,151 hospitals. The individual hospital payment parameters are taken from the best available data, including: the January 1, 1995 update to the Provider-Specific file, cost report data, and audit information supplied by intermediaries. Table V presents estimates of payments per case for FY 1995 and FY 1996 (columns 2 and 3). Column 4 shows the total percentage change in payments from FY 1995 to FY 1996. Column 5 presents the percentage change in payments that can be attributed to Federal rate changes alone.

Federal rate changes represented in Column 5 include the 21.30 percent increase in the Federal rate, a 0.85 percent increase in case mix, changes in the adjustments to the Federal rate (for example, the effect of the new hospital wage index on the geographic adjustment factor), and reclassifications by the Medicare Geographic Classification Review Board. We note that the 21.3 percent increase in the Federal rate incorporates the 1.14 percent decrease in the base rate to remove FY 1992 tax costs. Therefore, any effect of that decrease to the rate is represented in column 5. Column 4 includes the effects of the Federal rate changes represented in column 3. Column 4 also includes the effects of all other changes. Those other changes

include: the change from 40 percent to 50 percent in the portion of the Federal rate for fully prospective hospitals, the hospital-specific rate update, changes in the proportion of new to total capital for hold-harmless hospitals, changes in old capital (for example, obligated capital put in use), hospital-specific rate redeterminations, exceptions, and the special payments to certain hospitals for capital-related taxes. The comparisons are provided by: (1) geographic location and (2) payment classification and payment region.

The simulation results show that, on average, capital payments per case can be expected to increase 20.4 percent in FY 1996. The results show that the effect of the Federal rate changes alone is to increase payments by 11.0 percent. In addition to the increase attributable to the Federal rate changes, a 9.4 percent increase is attributable to the effects of all other changes.

Our comparison by geographic location shows that urban and rural hospitals experience similar rates of increase (20.3 percent and 21.2 percent, respectively). Urban hospitals will gain at the same rate as rural hospitals (11.0 percent) from the Federal rate changes. Urban hospitals will gain slightly less than rural hospitals (9.3 percent compared to 10.2 percent) from the effects of all other changes.

By region, there is relatively little variation compared to some previous years. All regions are estimated to receive large increases in total capital payments per case, due to the expiration of the budget neutrality provision. Increases by region vary from a low of 16 percent (rural Mountain and urban East South Central regions) to a high of 25 percent (rural hospitals of the New England and Middle Atlantic regions).

By type of ownership, proprietary hospitals are projected to have the highest rate of increase (21.9 percent, of which 11.0 percent is due to Federal rate changes and 10.9 percent to the effects of all other changes). Payments to voluntary hospitals will increase 20.2 percent (10.9 percent due to the Federal rate changes and 9.3 percent due to the effects of all other changes) and payments to government hospitals will increase 20.7 percent (11.8 percent due to Federal rate changes and 8.9 percent due to the effects of all other changes). We believe that one factor contributing to the higher rate of increase for proprietary hospitals is the proposed change in the treatment of tax costs. Proportionately more proprietary hospitals are subject to capital-related taxes than other categories.

Section 1886(d)(10) of the Act established the Medicare Geographic Classification Review Board (MGCRB). Hospitals may apply for reclassification for purposes of the wage index, standardized payment amount, or both. Although the Federal capital rate is not affected, a hospital's geographic classification for purposes of the operating standardized amount does affect a hospital's capital payments as a result of the large urban adjustment factor and the disproportionate share adjustment for urban hospitals with 100 or more beds. Reclassification for wage index purposes affects the geographic adjustment factor since that factor is constructed from the hospital wage index.

To present the effects of the hospitals being reclassified for FY 1996 compared to the effects of reclassification for FY 1995, we show the average payment percentage increase for hospitals reclassified in each fiscal year and in total. For FY 1996 reclassifications, we indicate those hospitals reclassified for standardized amount purposes only, for wage index purposes only, and for both purposes. The reclassified groups are compared to all other nonreclassified hospitals. These categories are further identified by urban and rural designation.

Hospitals reclassified during FY 1996 as a whole are projected to experience a 22.0 percent increase in payments (11.7 percent attributable to Federal rate changes and 10.3 percent attributable to the effects of all other changes). Nonreclassified hospitals will gain slightly less (20.2 percent) than reclassified hospitals (22.0 percent) overall. Nonreclassified hospitals will gain slightly less than reclassified hospitals from the Federal rate changes (10.9 percent compared to 11.7 percent); they will also gain slightly less from the effects of all other changes (9.3 percent compared to 10.3 percent).

Since we are proposing a capital-related tax adjustment effective in FY 1996, we have added two new categories of hospitals to our analysis in Table V. For hospitals that we expect to receive special payments for taxes, average payments per case are estimated to increase from $667 in FY 1995 to $806 in FY 1996 (an increase of 20.9 percent). In contrast, payments to other hospitals are expected to increase at a slightly lower rate (20.2 percent). We believe that the proposed change in the treatment of taxes is a major factor in the difference in the payment increase between these two groups of hospitals.

TABLE V—COMPARISON OF TOTAL PAYMENTS PER CASE

[FY 1995 payments compared to FY 1996 payments]

	No. of hospitals	Average FY 1995 payments/case	Average FY 1996 payments/case	All changes	Portion attributable to Federal rate change
By Geographic Location:					
All hospitals	5,151	602	725	20.4	11.0
Large urban areas (populations over 1 million)	1,620	688	833	21.1	11.4
Other urban areas (populations of 1 million or fewer)	1,273	602	718	19.2	10.5
Rural areas	2,258	396	480	21.2	11.0
Urban hospitals	2,893	652	785	20.3	11.0
0–99 beds	715	497	597	20.1	10.6
100–199 beds	917	595	712	19.7	10.4
200–299 beds	601	616	740	20.2	11.1
300–499 beds	480	666	804	20.6	11.4
500 or more beds	180	801	968	20.8	11.2
Rural hospitals	2,258	396	480	21.2	11.0
0–49 beds	1,170	297	370	24.9	11.5
50–99 beds	664	361	439	21.4	11.2
100–149 beds	230	429	518	20.7	11.7
150–199 beds	108	430	518	20.4	9.5
200 or more beds	86	507	606	19.5	10.9

TABLE V—COMPARISON OF TOTAL PAYMENTS PER CASE—Continued

[FY 1995 payments compared to FY 1996 payments]

	No. of hospitals	Average FY 1995 payments/case	Average FY 1996 payments/case	All changes	Portion attributable to Federal rate change
	(1)	(2) [1]	(3) [1]	(4)	
By Region:					
Urban by Region	2,893	652	785	20.3	11.0
New England	163	632	768	21.5	12.0
Middle Atlantic	440	681	834	22.5	11.4
South Atlantic	431	660	783	18.6	10.6
East North Central	481	600	727	21.1	11.0
East South Central	164	614	713	16.1	8.9
West North Central	195	651	771	18.5	9.6
West South Central	371	680	798	17.4	11.1
Mountain	119	647	775	19.8	13.0
Pacific	482	719	885	22.9	11.7
Puerto Rico	47	249	294	18.0	10.2
Rural by Region	2,258	396	480	21.2	11.0
New England	53	533	666	24.9	8.8
Middle Atlantic	84	397	496	25.0	12.6
South Atlantic	297	410	498	21.4	12.1
East North Central	305	390	467	19.8	10.1
East South Central	275	368	444	20.4	11.7
West North Central	527	371	451	21.8	11.2
West South Central	351	378	459	21.3	10.4
Mountain	218	447	519	16.1	8.5
Pacific	143	450	554	23.2	10.8
By Payment Classification:					
All hospitals	5,151	602	725	20.4	11.0
Large urban areas (populations over 1 million)	1,813	675	818	21.2	11.4
Other urban areas (populations of 1 million or fewer)	1,291	596	708	18.8	10.4
Rural areas	2,047	383	464	21.3	10.9
Teaching Status:					
Nonteaching	4,101	525	629	19.7	10.9
Fewer than 100 Residents	826	632	764	20.9	11.1
100 or more Residents	224	889	1,082	21.7	11.3
DIsproportionate share hospitals (DSH):					
Non-DSH	3,220	553	668	20.8	10.7
Urban DSH:					
100 or more beds	1,387	680	817	20.1	11.3
Less than 100 beds	134	460	554	20.5	11.4
Rural DSH:					
Sole Community (SCH/EACH)	137	367	433	18.0	9.8
Referral Center (RRC/EACH)	40	441	529	20.0	10.3
Other Rural:.					
100 or more beds	83	392	474	20.9	11.4
Less than 100 beds	150	290	361	24.8	13.8
Urban teaching and DSH:					
Both teaching and DSH	653	741	896	20.9	11.4
Teaching and no DSH	350	661	806	22.0	10.8
No teaching and DSH	868	591	703	18.8	11.2
No teaching and no DSH	1,233	570	682	19.7	10.6
Rural Hospital Types:					
Nonspecial status hospitals	1,278	333	412	23.7	12.4
RRC/EACH	111	463	559	20.8	10.6
SCH/EACH	612	392	465	18.6	9.2
SCH, RRC and EACH	46	491	576	17.3	8.9
Hospitals Reclassified by the Medicare Geographic Classification Review Board:					
Reclassification Status During FY95 and FY96:					
Reclassified During Both FY95 and FY96	465	557	675	21.2	11.4
Reclassified During FY96 Only	153	491	616	25.5	13.1
Reclassified During FY95 Only	220	598	680	13.7	6.7
FY96 Reclassifications:					
All Reclassified Hospitals	618	543	663	22.0	11.7
All Nonreclassified Hospitals	4,506	611	735	20.2	10.9
All Urban Reclassified Hospitals	209	622	760	22.1	11.7
Urban Nonreclassified Hospitals	2,684	655	787	20.2	11.0
All Reclassified Rural Hospitals	409	463	564	21.8	11.7
Rural Nonclassified Hospitals	1,822	361	436	20.8	10.5

TABLE V—COMPARISON OF TOTAL PAYMENTS PER CASE—Continued

[FY 1995 payments compared to FY 1996 payments]

	No. of hospitals	Average FY 1995 payments/case	Average FY 1996 payments/case	All changes	Portion attributable to Federal rate change
	(1)	(2) [1]	(3) [1]	(4)	
Other Reclassified Hospitals (Section 1886(D)(8)(B))	27	434	527	21.5	13.4
Real Estate Tax Status:					
No Payments for Taxes	3,906	574	691	20.2	11.3
Special Payments for Taxes	1,245	667	806	20.9	10.5
Type of Ownership:					
Voluntary	3,092	614	738	20.2	10.9
Proprietary	725	631	769	21.9	11.0
Government	1,334	507	612	20.7	11.8
Medicare Utilization as a Percent of Inpatient Days:					
0–25	268	667	818	22.6	10.5
25–50	1,357	715	864	20.8	11.1
50–65	2,227	560	671	19.9	10.9
Over 65	1,234	501	604	20.5	11.3

Appendix B: Technical Appendix on the Capital Acquisition Model and Required Adjustments

Section 1886(g)(1)(A) of the Act requires that for FY 1992 through FY 1995 aggregate prospective payments for operating costs under section 1886(d) of the Act and prospective payments for capital costs under section 1886(g) of the Act be reduced each year in a manner that results in a 10 percent reduction of the amount that would have been payable on a reasonable cost basis for capital-related costs in that year. To implement this requirement, we developed the capital acquisition model to determine the budget neutrality adjustment factor. Even though the budget neutrality requirement expires effective with FY 1996, we must continue to determine the recalibration and geographic reclassification budget neutrality adjustment factor, and the reduction in the Federal and hospital-specific rates for exceptions payments. We continue to use the capital acquisition model to determine these factors.

The following data are used in the capital acquisition model: the December 1994 update of the PPS–9 (cost reporting periods beginning in FY 1992) and PPS–10 (cost reporting periods beginning in FY 1993) cost reports, the January 1, 1995 update of the provider specific file, and the March 1994 update of the intermediary audit file.

The available data still lack certain items that were required for the determination of budget neutrality, including a hospital's projected new capital costs for each year, its projected old capital costs for each year, and the projected obligated capital amounts that will be put in use for patient care services and recognized as old capital each year.

Since hospitals under alternative payment system waivers (that is, hospitals in Maryland) are currently excluded from the capital prospective payment system, we excluded these hospitals from our model.

We then developed FY 1992, FY 1993, FY 1994, and FY 1995 hospital-specific rates using the provider-specific file, the intermediary audit file, and when available, cost reports. (We used the cumulative provider-specific file, which includes all updates to each hospital's records, and chose the latest record for each fiscal year.) We checked the consistency between the provider-specific file and the intermediary audit file. We also ensured that the FY 1993 increase in the hospital-specific rate was at least 0.62 percent (the net FY 1993 update), that the FY 1994 hospital-specific rate was at least as large as the FY 1993 hospital-specific rate decreased by 2.16 percent (the net FY 1994 update), and that the FY 1995 increase in the hospital-specific rate was at least 0.05 percent (the net FY 1995 update). We were able to match hospitals to the files as shown in the following table.

Source	Number of hospitals
Provider-Specific File Only	54
Provider-Specific and Audit File	5100
Total	5154

Thirty-nine of these hospitals had unusable or missing data. We were able to back-fill a hospital-specific rate for 36 of these hospitals from the cost reports as shown in the following table.

Source	Number of hospitals
PPS–5 Cost Reports	2
PPS–7 Cost Reports	2
PPS–8 Cost Reports	2
PPS–9 Cost Reports	10
PPS–10 Cost Reports	18
PPS–11 Cost Reports	2
Total	36

We did not have data for 3 hospitals, and had to eliminate them from the capital analysis. These hospitals likely are new hospitals or hospitals with very few Medicare admissions. This leaves us with 5151 hospitals and should not affect the precision of the required adjustment factors.

Next, we determined old and new capital amounts for FY 1992 using the PPS–9 cost reports as the first source of data. For FY 1993 we used PPS–9 and PPS–10 cost reports as the first source of data weighting each cost report by the number of days in FY 1993. We were able to match 5,097 PPS–9 cost reports and 4,824 PPS–10 cost reports. In cases where cost reports could not be matched, we used the provider-specific file for old capital information. Even in cases where a cost report was available, the breakout of old and new capital was not always available. In these cases, we used the old capital amounts and new capital ratios from the provider-specific file. If these were missing, we derived the old capital amount from the hospital-specific rate.

Finally, we used the intermediary audit file to develop obligated capital

amounts. Since the obligated amounts are aggregate projected amounts, we computed a Medicare capital cost per admission associated with these amounts. We adjusted the aggregate amounts by the following factors:

(1) Medicare inpatient share of capital. This was derived from cost reports and was limited to the Medicare share of total inpatient days. It was necessary to limit the Medicare share because of data integrity problems. Medicare share of inpatient days is a reasonably good proxy for allocating capital. However, it may be understated if Medicare utilization is high, and may be overstated because it does not reflect the outpatient share of capital.

(2) Capitalization factor. This factor allocates the aggregate amount of obligated capital to depreciation and interest amounts. Consistent with the assumptions in the capital input price index, we used a 25-year life for fixed capital and a 10-year life for movable capital, and an average projected interest rate of 6.7 percent. We also assumed that fixed capital acquisitions are about one-half of total capital. In conjunction with the useful life and interest rate assumptions, the resulting capitalized fixed capital is about one-half of total capitalization. This is consistent with the allocations between fixed and movable capital found on the cost reports. The ratio we developed is 0.137, which produces the first year capitalization based on the aggregate amount.

(3) A divisor of Medicare admissions to derive the capital per discharge amount. Since we must project capital amounts for each hospital, we continued to use a Monte Carlo simulation to develop these amounts. (This model is described in detail in the August 30, 1991 final rule (56 FR 43517).) The Monte Carlo simulation is now used only to project capital costs per discharge amounts for each hospital. We analyzed the distributions of capital increases, and noted a slightly negative correlation between the dollar level of capital cost per admission, and the rate of increase in capital. To determine the rate of increase in capital cost per admission, we multiplied the lesser of $3,000 or the capital cost per admission by .00006 and subtracted this result from 1.2. (Increases for capital levels over $3,000 were not influenced by the level of capital, so this part of the calculation was capped at $3,000.) We selected a random number from the normal distribution, multiplied it by 0.17 (the standard deviation) and added it to −0.04 (the mean) and then added 1 to create a multiplier. This random result was multiplied by the previous result to assign a rate of increase factor which was multiplied by the prior year's capital per discharge amount to develop a capital per discharge amount for the projected year.

To model a projected year, we used the old and new capital for the prior year multiplied by 0.96 (aging factor). The 0.96 aging factor is the average of changes in capital over its life. The aged new and old capital is subtracted from the projected capital described in the previous paragraph. The difference represents newly acquired capital. We assume that the hospital would accrue only a half year of costs for newly acquired capital in the year in which the capital comes on line. This is because, on average, new capital will come on line in the middle of the year. We make the same assumption for obligated capital. If the hospital has obligated capital, the lesser of one half of the adjusted costs (as described in the succeeding paragraph) for newly acquired capital or one half of the costs (for FY 1993, all of the costs) for obligated capital are deemed to apply to the current year. The full year's costs for new or obligated capital are assumed to apply for the following year. For FY 1994, one half of the costs for any outstanding obligated capital were deemed to apply to FY 1994; a full year's costs were deemed to apply to FY 1995. With the exception of certain hospitals about whom we have information to the contrary, we assume that hospitals would meet the expiration dates provided under the obligated capital provision. The on-line obligated amounts are added to old capital and subtracted from the newly acquired capital to yield residual newly acquired capital, which is then added to new capital. The residual newly acquired capital is never permitted to be less than zero.

Next, we computed the average total capital cost per discharge from the capital costs that were generated by the model and compared the results to total capital costs per discharge that we had projected independently of the model. We adjusted the newly acquired capital amounts proportionately, so that the total capital costs per discharge generated by the model match the independently projected capital costs per discharge.

Once each hospital's capital-related costs are generated, the model projects capital payments. We use the actual payment parameters (for example, the case-mix index and the geographic adjustment factor) that are applicable to the specific hospital.

To project capital payments, the model first assigns the applicable payment methodology (fully prospective or hold-harmless) to the hospital. If available, the model uses the payment methodology indicated in the PPS–9 cost reports or the provider-specific file. Otherwise, the model determines the methodology by comparing the hospital's FY 1992 hospital-specific rate to the adjusted Federal rate applicable to the hospital. The model simulates Federal rate payments using the assigned payment parameters and hospital-specific estimated outlier payments. The case-mix index for a hospital is derived from the 1994 MedPAR file using the proposed FY 1996 DRG relative weights published in this rule. The case-mix index is increased each year after FY 1994 consistent with the continuing trend in case-mix increase.

We analyzed the case-mix increases for the recent past and found that case-mix increases have decelerated to about 1.53 percent in FY 1992, 0.78 percent in FY 1993, and 0.75 percent in FY 1994. It is too early to reliably determine a case-mix increase for FY 1995 from the discharge data. Since case-mix increases appear to be decelerating, we have reduced our projected long-term increase of 2 percent to .8 percent for both FY 1995 and FY 1996. We will continue to monitor case-mix increases and make appropriate adjustments to our projections. (Since we are using FY 1994 cases for our analysis, the FY 1994 increase in case mix has no effect on projected capital payments.)

Changes in geographic classification and revisions to the hospital wage data used to establish the hospital wage index affect the geographic adjustment factor. Changes in the DRG classification system and the relative weights affect the case-mix index.

Section 1886(g)(1)(A) of the Act requires that, for discharges occurring after September 30, 1993, the unadjusted standard Federal rate be reduced by 7.4 percent. Consequently, the model reduces the unadjusted standard Federal rate by 7.4 percent effective in FY 1994. Since budget neutrality expires effective with FY 1996, this adjustment affects the Federal rate starting in FY 1996.

Since we are proposing separate payments for real estate taxes, we are adjusting the Federal rate so that aggregate payments from the Federal rate and tax payments are budget neutral. Using data from the tax verification survey, and the information from the PPS–9 cost reports, we compared Medicare's share of taxes, with Medicare's share of capital. Medicare's share of taxes is computed by multiplying total taxes by the ratio of

Medicare's share of capital to total capital. In computing Medicare's share of capital, we applied adjustments to account for the estimated effects of future audits and reopenings. For unaudited cost reports, Medicare's share of capital was multiplied by .9299 to reflect the anticipated effects of auditing. For audited cost reports, Medicare's share of capital was multiplied by 1.0034 to reflect the anticipated effects of reopening cost reports. We used all short-stay hospitals, including hospitals in waiver States and hospitals with no taxes, but excluded cancer hospitals. We used the group of all short-stay acute care hospitals because the waivers for certain areas could be terminated at some future date. We believe that, in determining permanent changes to the rates, we should include hospitals that may be incorporated into the prospective payment system at a later date. We used tax information from all hospitals, including those that did not respond to the tax verification survey. Since we are providing a final opportunity to verify tax information, we decided to use information from all hospitals in this analysis. However, we propose to use only verified tax information in the final rule. The ratio of taxes to capital costs is 0.0114. The adjustment to the Federal rate for taxes is $1 - 0.0114 = 0.9886$. For modeling payments we divided Medicare's share of taxes by Medicare discharges to determine taxes per discharge, which were then updated by 1.1475 (the cumulative Federal rate increase for FY 1993 through FY 1996). This amount is then multiplied by the Federal rate percentage and added to the payments for capital.

The proposed change in the method of paying transfer cases affects total capital payments. We are making the effect of this change budget neutral. To determine the budget neutrality adjustment factor for transfers, we followed the methodology described in section VI.D of Appendix A to this proposed rule. We computed the transfer-adjusted number of discharges and case-mix under the current transfer policy, and the proposed transfer policy for each hospital. We multiplied the corresponding number of discharges and case-mix numbers for each hospital and added all hospitals together. The number computed under the current transfer policy divided by the number computed under the proposed transfer policy yielded the transfer adjustment factor of 0.9972. This adjustment factor is applied to both the hospital specific rate and the Federal rate.

Section 412.308(c)(4)(ii) requires that the estimated aggregate payments for the fiscal year, based on the Federal rate after any changes resulting from DRG reclassifications and recalibration and the geographic adjustment factor, equal the estimated aggregate payments based on the Federal rate that would have been made without such changes. For FY 1995, the budget neutrality adjustment factor was 1.0031. To determine the factor for FY 1996, we first determined the portion of the Federal rate that would be paid for each hospital in FY 1996 based on its applicable payment methodology. We then compared estimated aggregate Federal rate payments based on the FY 1995 DRG relative weights and FY 1995 geographic adjustment factor to estimated aggregate Federal rate payments based on the FY 1996 relative weights and the FY 1996 geographic adjustment factor. In making the comparison, we held the FY 1996 Federal rate portion constant and set the other budget neutrality adjustment factor and exceptions reduction factor to 1.00. We determined that to achieve budget neutrality for the changes in the geographic adjustment factor and DRG classifications and relative weights, an incremental budget neutrality adjustment of 0.9993 for FY 1996 should be applied to the previous cumulative FY 1995 adjustment of 1.0031 (the product of the FY 1993 incremental adjustment of 0.9980, the FY 1994 incremental adjustment of 1.0053, and the FY 1995 incremental adjustment of 0.9998), yielding a cumulative adjustment of 1.0024 through FY 1996.

The methodology used to determine the recalibration and geographic (DRG/GAF) budget neutrality adjustment factor is similar to that used in establishing budget neutrality adjustments under the prospective payment system for operating costs. One difference is that under the operating prospective payment system, the budget neutrality adjustments for the effect of geographic reclassifications are determined separately from the effects of other changes in the hospital wage index and the DRG weights. Under the capital prospective payment system, there is a single DRG/GAF budget neutrality adjustment factor for changes in the geographic adjustment factor (including geographic reclassification) and the DRG relative weights. In addition, there is no adjustment for the effects that geographic reclassification has on the other payment parameters, such as the payments for serving low income patients or the large urban add-on.

In addition to computing the DRG/GAF budget neutrality adjustment factor, we used the model to simulate total payments under the prospective payment system.

Additional payments under the exceptions process are accounted for through a reduction in the Federal and hospital-specific rates. Therefore, we used the model to calculate estimated exceptions payments and the exceptions reduction factor. This exceptions reduction factor ensures that estimated aggregate payments under the capital prospective payment system, including exceptions payments, equal estimated aggregate payments under the capital prospective payment system without an exceptions process. Since changes in the level of the payment rates change the level of payments under the exceptions process, the exceptions reduction factor must be determined through iteration. Even though the additional payments for taxes are used to determine whether exceptions would be paid and the amount of the exceptions, the adjustment factor is not applied to the tax amounts.

In the August 30, 1991 final rule (56 FR 43517), we indicated that we would publish each year the estimated payment factors generated by the model to determine payments for the next 5 years. The table below provides the actual factors for FY 1992, FY 1993, FY 1994, and FY 1995, the proposed factors for FY 1996, and the estimated factors that would be applicable through FY 2000. We caution that, except with respect to FY 1992, FY 1993, FY 1994, FY 1995 and the proposed FY 1996, these are estimates only, and are subject to revisions resulting from continued methodological refinements, more recent data, and any payment policy changes that may occur. In this regard, we note that in making these projections we have assumed that the cumulative DRG/GAF adjustment factor will remain at 1.0024 for FY 1996 and later because we do not have sufficient information to estimate the change that will occur in the factor for years after FY 1996.

The projections are as follows:

Fiscal year	Update factor	Exceptions reduction factor	Budget neutrality factor	Federal rate (after outlier reduction)
1992	N/A	0.9813	0.9602	415.59
1993	6.07	.9756	.9162	[1] 417.29
1994	3.04	.9485	.8947	[2] 378.34
1995	3.44	.9734	.8432	[3] 376.83
1996	1.50	.9840	N/A	[4] 457.11
1997	1.80	.9804	N/A	463.63
1998	1.90	.9723	N/A	468.54
1999	2.00	.9572	N/A	470.49
2000	2.00	.9375	N/A	470.02

[1] Note: Includes the DRG/GAF adjustment factor of 0.9980 and the change in the outlier adjustment from 0.9497 in FY 1992 to 0.9496 in FY 1993.

[2] Note: Includes the 7.4 percent reduction in the unadjusted standard Federal rate. Also includes the DRG/GAF adjustment factor of 1.0033 and the change in the outlier adjustment from 0.9496 in FY 1993 to 0.9454 in FY 1994.

[3] Note: Includes the DRG/GAF adjustment factor of 1.0031 and the change in the outlier adjustment from 0.9454 in FY 1994 to 0.9414 in FY 1995.

[4] Note: Includes the adjustment of .9886 for taxes, and the transfer adjustment of .9972. Also includes the DRG/GAF adjustment factor of 1.0024 and the change in the outlier adjustment from .9414 in FY 1995 to .9526 in FY 1996. Future adjustments are, for purposes of this projection, assumed to remain at the same level.

BILLING CODE 4120–01–P

Appendix C

THE SECRETARY OF HEALTH AND HUMAN SERVICES
WASHINGTON D.C. 20201

MAR 17 1995

The Honorable Albert Gore, Jr.
President of the Senate
Washington, D.C. 20510

Dear Mr. President:

I am respectfully submitting the report on Medicare hospital outpatient prospective payment as required by section 4151(b)(2) of the Omnibus Budget Reconciliation Act of 1990 (P.L. 101-508). This section requires the Secretary of Health and Human Services to develop a proposal to replace the current Medicare payment system for hospital outpatient services with a prospective payment system.

The report presents a phased approach to the establishment of a hospital outpatient prospective payment system. For the first phase, a prospective payment system would be for hospital outpatient surgery, radiology, and other diagnostic procedures. As further research is completed, the payment system could be expanded to cover all hospital outpatient services.

The report discusses an issue with the amount of coinsurance that Medicare beneficiaries pay for outpatient surgery, radiology and other diagnostic procedures. Current law requires that beneficiaries pay 20 percent of submitted charges. However, in the recent past, hospitals' submitted charges have substantially exceeded Medicare's payment for these services, so that most of the time beneficiary coinsurance payments substantially exceed 20 percent of Medicare's payment. If Congress chose to set beneficiary coinsurance at 20 percent of Medicare allowed payments, this act would require a substantial increase in program expenditures and also could affect payments to providers. Even incremental modifications in the coinsurance percentage can have substantial impacts on Medicare program expenditures. Should Congress decide to modify current coinsurance arrangements, the report presents a number of alternatives and displays their costs to the Medicare program.

Page 2 - The Honorable Albert Gore

In addition, the report discusses a related problem with the current payment formula that results in an unintended increase in Medicare payments -- the so-called "formula driven overpayment." We believe this result was not intended by Congress. If Congress chooses to address this issue, the correction can be made separately or as part of the implementation of a prospective payment system.

I am also sending a copy of this report to the Speaker of the House of Representatives.

Sincerely,

Donna E. Shalala

Enclosure

THE SECRETARY OF HEALTH AND HUMAN SERVICES
WASHINGTON, D.C. 20201

MAR 17 1995

The Honorable Newt Gingrich
Speaker of the House of Representatives
Washington, D.C. 20515

Dear Mr. Speaker:

I am respectfully submitting the report on Medicare hospital outpatient prospective payment as required by section 4151(b)(2) of the Omnibus Budget Reconciliation Act of 1990 (P.L. 101-508). This section requires the Secretary of Health and Human Services to develop a proposal to replace the current Medicare payment system for hospital outpatient services with a prospective payment system.

The report presents a phased approach to the establishment of a hospital outpatient prospective payment system. For the first phase, a prospective payment system would be for hospital outpatient surgery, radiology, and other diagnostic procedures. As further research is completed, the payment system could be expanded to cover all hospital outpatient services.

The report discusses an issue with the amount of coinsurance that Medicare beneficiaries pay for outpatient surgery, radiology and other diagnostic procedures. Current law requires that beneficiaries pay 20 percent of submitted charges. However, in the recent past, hospitals' submitted charges have substantially exceeded Medicare's payment for these services, so that most of the time beneficiary coinsurance payments substantially exceed 20 percent of Medicare's payment. If Congress chose to set beneficiary coinsurance at 20 percent of Medicare allowed payments, this act would require a substantial increase in program expenditures and also could affect payments to providers. Even incremental modifications in the coinsurance percentage can have substantial impacts on Medicare program expenditures. Should Congress decide to modify current coinsurance arrangements, the report presents a number of alternatives and displays their costs to the Medicare program.

Page 2 - The Honorable Newt Gingrich

In addition, the report discusses a related problem with the current payment formula that results in an unintended increase in Medicare payments -- the so-called "formula driven overpayment." We believe this result was not intended by Congress. If Congress chooses to address this issue, the correction can be made separately or as part of the implementation of a prospective payment system.

I am also sending a copy of this report to the President of the Senate.

Sincerely,

Donna E. Shalala

Enclosure

BILLING CODE 4120–01–C

Appendix D: Recommendation of Update Factors for Operating Cost Rates of Payment for Inpatient Hospital Services

I. Background

Several provisions of the Social Security Act (the Act) address the setting of update factors for services furnished in FY 1996 by hospitals subject to the prospective payment system and those excluded from the prospective payment system. Section 1886(b)(3)(B)(i)(XI) of the Act sets the FY 1996 percentage increase in the operating cost standardized amounts equal to the rate of increase in the hospital market basket minus 2.0 percentage points for prospective payment hospitals in all areas. Section 1886(b)(3)(B)(iv) of the Act sets the FY 1996 percentage increase to the hospital-specific rate applicable to sole community hospitals equal to the rate set forth in section 1886(b)(3)(B)(i) of the Act, that is, the same update factor as all other hospitals subject to the prospective payment system, or the rate of increase in the market basket minus 2.0 percentage points. Section 1886(b)(3)(B)(ii) of the Act sets the FY 1996 percentage increase in the rate of increase limits for hospitals excluded from the prospective payment system equal to the rate of increase in the excluded hospital market basket minus the applicable reduction or, in the case of a hospital in a fiscal year for which the hospital's update adjustment percentage is at least 10 percent, the excluded hospital market basket percentage increase. Under section 1886(b)(3)(B)(v) of the Act, a hospital's update percentage increase for FY 1996 is the percentage increase by which the hospital's allowable operating costs of inpatient hospital services recognized under this title for the cost reporting period beginning in FY 1990 exceed the hospital's target amount for such cost reporting period, increased for each fiscal year (beginning with FY 1994) by the sum of any of the hospital's applicable reductions for previous years. The applicable reduction with respect to a hospital for FY 1996 is the lesser of 1 percentage point or the percentage point difference between 10 percent and the hospital's update adjustment percentage for FY 1996.

In accordance with section 1886(d)(3)(A) of the Act, we are proposing to update the standardized amounts, the hospital-specific rates, and the rate-of-increase limits for hospitals excluded for the prospective payment system as provided in section 1886(b)(3)(B) of the Act. Based on the first quarter 1995 forecasted market basket increase of 3.5 percent for hospitals subject to the prospective payment system, the proposed updates in the standardized amounts are 1.5 percent for hospitals in both large urban and other areas. The proposed update in the hospital-specific rate applicable to sole community hospitals is 1.5 percent (that is, the market basket rate of increase of 3.5 percent minus 2.0 percentage points). The proposed update for hospitals excluded from the prospective payment system is based on the percentage increase in the excluded hospital market basket (currently estimated at 3.6 percent) minus the applicable reduction factor. The applicable reduction factor is the lesser of 1 percentage point or the percentage point difference between 10 percent and the hospital's update adjustment percentage. Therefore, for excluded hospitals, the hospital-specific update can vary between 2.6 and 3.6 percent.

Sections 1886(e)(2)(A) and (3)(A) of the Act require that the Prospective Payment Assessment Commission (ProPAC) recommend to the Congress by March 1, 1995 an update factor that takes into account changes in the market basket rate of increase index, hospital productivity, technological and scientific advances, the quality of health care provided in hospitals, and long-term cost effectiveness in the provision of inpatient hospital services.

In its March 1, 1995 report, ProPAC recommended update factors to the standardized amounts equal to the percentage increase in the market basket minus 1.8 percentage points for hospitals in both large urban and other areas. Based on its market basket rate of increase estimate of 3.9 percent, ProPAC's recommended update to the standardized amounts equal 2.1 percent for hospitals in both large urban and other areas. ProPAC recommended that the update for the hospital-specific rates applicable to sole community hospitals be the same factor as the rate for all other prospective payment hospitals. This recommendation would result in a 2.1 percent update to the hospital-specific rates. The components of ProPAC's update factor recommendations are described in detail in the ProPAC report, which is published as Appendix E to this document. We discuss ProPAC's recommendations concerning the update factors and our responses to these recommendations below.

Section 1886(e)(4) of the Act requires that the Secretary, taking into consideration the recommendations of ProPAC, recommend update factors for each fiscal year that take into account the amounts necessary for the efficient and effective delivery of medically appropriate and necessary care of high quality. Under section 1886(e)(5) of the Act, we are required to publish the update factors recommended under section 1886(e)(4) of the Act. Accordingly, this appendix provides the recommendations of appropriate update factors, the analysis underlying our recommendations, and our responses to the ProPAC recommendations concerning the update factors.

II. Secretary's Recommendations

Under section 1886(e)(4) of the Act, we are recommending that the standardized amounts be increased by an amount equal to the market basket rate of increase minus 2.0 percentage points for hospitals located in large urban and other areas. We are also recommending an update of the market basket rate of increase minus 2.0 percentage points to the hospital-specific rate for sole community hospitals. These figures are consistent with the President's budget recommendation, given the current market basket forecast of 3.5 percent.

We recommend that hospitals excluded from the prospective payment system receive an update equal to the percentage increase in the market basket that measures input price increases for services furnished by excluded hospitals minus 1.0 percentage point. That market basket rate of increase is currently forecast at 3.6 percent. Subtracting 1.0 percentage point would result in an update for hospitals excluded from the prospective payment system of 2.6 percent.

As required by section 1886(e)(4) of the Act, we have taken into consideration the recommendations of ProPAC in setting these recommended update factors. Our responses to the ProPAC recommendations concerning the update factors are discussed below.

III. ProPAC Recommendation for Updating the Prospective Payment System Standardized Amounts

For FY 1996, ProPAC recommends that the standardized amounts be updated by the following factors:

- The projected increase in the HCFA market basket index, estimated at 3.9 percent, based upon the fourth quarter 1994 forecast;
- An adjustment of 0.4 percentage points to reflect the difference between the ProPAC and HCFA market baskets;
- A negative adjustment of 1.8 percentage points to correct for substantial error in the FY 1994 market basket forecast;
- A positive adjustment of 0.3 percentage points to reflect the cost-

increasing effects of scientific and technological advances;

- A negative adjustment of 0.3 percentage points to encourage hospital productivity improvements; and
- A net adjustment of zero percentage points for case-mix change in FY 1995.

Overall, the net increase employing the above factors is the percentage increase in the hospital market basket minus 1.8 percentage points. Based on the market basket estimate of 3.9 percent, ProPAC recommends that hospitals in large urban and other areas receive a 2.1 percent update.

Response: We are recommending an update that is consistent with the Administration's budget proposal and the requirements of section 1886(b)(3)(B)(i) of the Act, as amended by section 13501(a) of Public Law 103–66. Our recommendation is that the update for prospective payment system hospitals located in large urban and other areas for FY 1996 be equal to the market basket rate of increase forecast minus 2.0 percentage points. Based on HCFA's current forecast of the market basket rate of increase (3.5 percent), we recommend an update for FY 1996 for large urban and other hospitals equal to 1.5 percent. Our recommendation is supported by the following analyses that measure changes in hospital productivity, scientific and technological advances, practice pattern changes, and changes in case mix:

- *Productivity:* Service level productivity is defined as the ratio of total service output to full-time equivalent employees (FTEs). While we recognize that productivity is a function of many variables (for example, labor, nonlabor material, and capital inputs), we use a labor productivity measure in our framework, since the current update framework applies to operating payment. To recognize that we are apportioning the short run output changes to the labor input, we weigh our productivity measure for operating costs by the appropriate share of labor input relative to total operating input to determine the expected effect on cost per case.

Our recommendation for the service productivity component is based on historical trends in productivity and total output for both the hospital industry and the general economy, and projected levels of future hospital service output. ProPAC has also estimated cumulative service productivity growth to be 4.9 percent from 1985–1989, or 1.2 percent annually. At the same time, they estimate total output growth at 3.4 percent annually, implying a ratio of service productivity growth to output growth of 0.35. Our MedPAR analysis indicates total Medicare service output (charges per admission, adjusted for CPI change) increased 16.5 percent from 1985–1994, or an approximate average annual increase of 1.7 percent. Since it is not possible at this time to develop a productivity measure specific to Medicare patients, we examined productivity (output per hour) and output (gross domestic product) for the economy. Depending on the exact time period, annual changes in productivity range from .3 to .35 of the change in output (that is, a 1.0 percent increase in output would be correlated with an 0.3 to 0.35 percent change in output per hour).

Under our framework, the recommended update is based in part on expected productivity—that is, projected service output during the year multiplied by the historical ratio of service productivity to total service output, multiplied by the share of labor in total operating inputs, as calculated in the hospital market basket rate of increase. This method estimates an expected labor productivity improvement in the same proportion to expected total service growth that has occurred in the past and assumes that, at a minimum, growth in FTEs changes proportionally to the growth in total service output. Thus, the recommendation allows for unit productivity to be smaller than the historical averages in years that output growth is relatively low and higher in years that output growth is larger than the historical trend. Based on the above estimates from both the hospital industry and the economy, we have chosen to employ the range of ratios of productivity change to output change of 0.30 to 0.35.

The expected change in total hospital service output is the product of projected growth in total admissions (adjusted for outpatient usage), projected real case-mix growth, and expected quality enhancing intensity growth, net of expected decline in intensity due to reduction of cost ineffective practice. Case-mix growth and intensity numbers for Medicare are used as proxies for those of the total hospital, since case-mix increases (used in the intensity measure as well) are unavailable for non-Medicare patients. Thus, expected output growth is simply the sum of the expected change in intensity (0.0 percent), projected admissions change (3.0 percent for FY 1996), and projected real case-mix growth (.8 percent), or 3.8 percent. The share of direct labor services in the market basket rate of increase (consisting of wages, salaries, and employee benefits) is 61.7 percent. Multiplying the expected change in total hospital service output (3.8 percent) by the ratio of historical service productivity change to total service growth of 0.30 to 0.35 and by the direct labor share percentage (0.617) provides our productivity standard of 0.7 to 0.8 percent.

ProPAC also believes hospitals should be given an incentive for additional productivity improvement. ProPAC measures productivity as the ratio of hospital admissions (adjusted for case mix and outpatient services) per FTE employee (adjusted for changes in skill mix). ProPAC includes in its productivity measurement the effect of changes in practice patterns. We treat practice pattern changes as a portion of our intensity adjustment, described below. This year, ProPAC assumes a productivity gain of at least 0.6 percent and recommends a −0.3 percentage point adjustment on the basis that any productivity gains should be shared equally by Medicare and hospitals.

- *Intensity:* We base our intensity standard on the combined effect of three separate factors: changes in the use of quality enhancing services, changes in the use of services due to shifts in within-DRG severity, and changes in the use of services due to reductions of cost-ineffective practices. For FY 1996, we recommend an adjustment of 0.0 percent. The basis of this recommendation is discussed below.

We have no empirical evidence that accurately gauges the level of quality-enhancing technology changes. Typically, a specific new technology increases cost in some uses and decreases cost in other uses. Concurrently, health status is improved in some situations while in other situations it may be unaffected or even worsened using the same technology. It is difficult to separate out the relative significance of each of the cost increasing effects for individual technologies and new technologies.

The quality enhancing technology component is intended to recognize the use of services which increase cost but whose value in terms of enhanced health-status is commensurate with these costs. Such services may result from technological change, or in some cases, increased use of existing technologies. The latter recognizes that as cost and medical effectiveness studies become available, some increased use of existing, as well as new, services may be warranted.

The component for reduction of cost-ineffective practice recognizes that some improvements in practice patterns could be made so that the intensity of services

provided is more consistent with the efficient use of limited resources. That is, improvements could be made so that the number of services provided during an inpatient stay, and their complexity, produce an improvement in health status that is consistent with the cost of care. This component of our update recommendation is intended to encourage both hospitals and physicians to more carefully consider the cost-effectiveness of medical care. This component of the framework also accounts for real within-DRG change, since that should be directly reflected in the CMI-adjusted growth in real charges per case.

Following methods developed by HCFA's Office of the Actuary for deriving hospital output estimates from total hospital charges, we have developed Medicare-specific intensity measures based on a 5-year average using FY 1990–1994 MedPAR billing data. Case-mix constant intensity is calculated as the change in total Medicare charges per discharge adjusted for changes in the average charge per unit of service as measured by the Medical CPI hospital component and changes in real case-mix. For FY 1990 through FY 1992, we estimate that 1.0 to 1.4 percent of observed case-mix increase was real. This estimate is supported by past studies of case-mix change by the RAND Corporation. The most recent study was ''Has DRG Creep Crept Up? Decomposing the Case Mix Index Change Between 1987 and 1988'' by G.M. Carter, J.P. Newhouse, and D.A. Relles, R–4098–HCFA/ProPAC (1991). The study suggests that real case-mix change was not dependent on total change, but was rather a fairly steady 1.0 to 1.5 percent per year. We use 1.4 percent as the upper bound because the RAND study did not take into account that hospitals may have induced doctors to document medical records more completely in order to improve payment. For FY 1993 and FY 1994, we assumed that all of the observed case-mix increases of 0.9 and 0.8 percent, respectively, were real. If we assume that real case-mix increase was 1.0 percent for FY 1990–1992, 0.9 percent for FY 1993, and 0.8 percent for FY 1994, we estimate case-mix constant intensity declined by an average 1.2 percent during FY 1990 through 1994, for a cumulative decrease of 6.1 percent. If we assume that real case-mix increase was 1.4 percent for FY 1990–1992, 0.9 percent for FY 1993, and 0.8 percent for FY 1994, we estimate case-mix constant intensity declined by an average of 1.5 percent during FY 1990 through 1994, for a cumulative decrease of 7.2 percent. Since we estimate that intensity has declined during FY 1990–1994 period, we are recommending a 0.0 percent intensity adjustment for FY 1996.

- *Quality Enhancing New Science and Technology:* For FY 1996, ProPAC used a qualitative approach to develop its estimate by examining technologies considered in last year's estimate and reviewing the literature for potential new advances. ProPAC decided that 0.3 percent was the appropriate level for the FY 1996 adjustment. This is the same estimate ProPAC used in FY 1995. ProPAC stated that there is no reason to believe that the rate of increase in scientific and technological advances had risen or fallen from last year's estimate.

We still believe that there may be several shortcomings with ProPAC's recommendations with regard to technology. First, the estimate does not account for offsetting changes in DRG assignment. Second, it is not clear that all of the new technologies listed in ProPAC's study significantly enhance health status. To the extent the new technologies are not quality enhancing, an adjustment is inappropriate. Finally, some of the technologies have considerable potential for cost savings relative to the technologies they are replacing.

- *Change in Case Mix:* Our analysis takes into account projected changes in case-mix, adjusted for changes attributable to improved coding practices. For our FY 1996 update recommendation, we are projecting a 0.8 percent increase in the case-mix index. We define real case-mix increase as actual changes in the mix (and resource requirements) of Medicare patients as opposed to changes in coding behavior that result in assignment of cases to higher-weighted DRGs but do not reflect greater resource requirements. For FY 1996, we believe that real case-mix increase is equal to our projected change in case mix. We do not see any changes in coding behavior in our projected case-mix change. Our net adjustment to case-mix change for FY 1996 is 0.0 percentage points.

The −1.0 percent figure used in the ProPAC framework represents ProPAC's projection for observed case-mix change. ProPAC projects a 0.8 percentage points increase in real case-mix change across DRG's and a 0.2 percentage points increase in within-DRG case-complexity change. ProPAC's net adjustment for case mix is 0.0 percentage points.

- *Effect of FY 1994 DRG Reclassification and Recalibration:* We estimate that DRG reclassification and recalibration for FY 1994 resulted in a 0.3 percent increase in the case-mix index when compared with the case-mix index that would have resulted if we had not made the reclassification and recalibration changes to the GROUPER. ProPAC does not make an adjustment for DRG reclassification and recalibration in its update recommendation. (We note that Congress asks the Secretary for an estimate of these effects in our update recommendation.)

- *Correction for Market Basket Forecast Error:* The FY 1994 estimated market basket percentage increase used to update the payment rates was 4.3 percent. Our most recent data indicate the actual FY 1994 increase was 2.5 percent, reflecting that the actual increase in wages was lower than projected. The resulting forecast error in the projected FY 1994 market basket rate of increase is 1.8 percentage points. Our policy has been to make a forecast error correction if our estimate is off by 0.25 percentage points or more. Therefore, we are recommending an adjustment of −1.8 percentage points to reflect this overestimation of the FY 1994 market basket rate of increase. The following is a summary of the update ranges supported by our analyses compared to ProPAC's framework.

TABLE 1.—COMPARISON OF FY 1996 UPDATE RECOMMENDATIONS

	HHS	ProPAC
Market Basket	MB	MB
Difference Between HCFA & ProPAC Market Baskets	.....	+0.4
Subtotal	MB	MB+0.4
Policy Adjustment Factors:		
Productivity	−0.7 to −0.8	−0.3
Intensity:	0.0	.....
Science and Technology	.....	+0.3
Practice Patterns	.....	(1)
Real Within DRG Change	.....	(2)
Subtotal	−0.7 to −0.8	+0.0
Case Mix Adjustment Factors:		
Projected Case Mix Change	−0.8	−1.0
Real Across DRG Change	0.8	+0.8
Real Within DRG Change	(3)	+0.2
Subtotal	0.0	0.0
Effect of 1993 Reclassification and Recalibration	−0.3	.....
Forecast Error Correction	−1.8	−1.8
Total Recommended Update	MB–2.8 to MB–2.9	MB–1.4

[1] Included in ProPAC's Productivity Measure.
[2] Included in ProPAC's Case Mix Adjustment.
[3] Included in HHS's Intensity Factor.

While the above analysis would support a recommendation that the update be no more than market basket minus 2.8 percentage points, we are recommending an update of market basket minus 2.0 percentage points, consistent with current law. Any further reduction in the update factor would be most appropriate within the context of health care reform. We also recommend that the hospital-specific rates applicable to sole community hospitals be increased by the same update, market basket minus 2.0 percentage points.

IV. ProPAC Recommendation for the Elimination of a Separate Update for Sole Community Hospitals

ProPAC recommends an update factor for hospitals paid the hospital-specific rate equal to the factor used for all other prospective payment hospitals. As discussed earlier, the statute sets the update equal to the market basket minus 2.0 percentage points. In addition, ProPAC suggests that it is no longer necessary to calculate a separate update for these hospitals since section 1886(b)(3)(B)(iv) of the Act dictates that the update for sole community hospitals be the same as for other prospective payment hospitals in the future.

Response: We agree with the ProPAC recommendation that the update factor for hospitals paid the hospital-specific rate be the same as the update applicable to other prospective payment hospitals. That update factor is equal to the market basket percentage increase minus 2.0 percentage points, or 1.5 percent. We concur with the ProPAC suggestion to eliminate a separate update for the hospital-specific rate for the time being. We will continue to monitor the financial condition of sole community hospitals for signs of potential stress and provide a separate recommendation when and if conditions warrant it.

V. ProPAC Recommendation for Updating the Rate-of-Increase Limits for Excluded Hospitals

ProPAC recommends an update factor equal to the market basket rate of increase minus 1.6 percentage points for excluded hospitals and units. The 1.6 percentage points reduction represents a reduction of 1.6 percentage points to account for the forecast error in the FY 1994 market basket rate of increase for excluded units, no increase to reflect the different compensation price proxies used by ProPAC, and no allowance for new technology. ProPAC no longer recommends an additional allowance based on the year the hospital or unit was excluded from the prospective payment system, pending our report to Congress on payment reform for excluded hospitals and units as mandated by Public Law 101–508.

Response: We recommend that hospitals excluded for the prospective payment system receive an update equal to the percentage increase in the market basket that measures input price increases for services furnished by excluded hospitals minus 1.0 percentage point. The reduction is consistent with the updates provided under the current law and in the President's budget. The market basket rate of increase for excluded hospitals is currently forecast at 3.6 percent. Subtracting 1.0 percentage point would result in an update of 2.6 percent for excluded hospitals and units.

BILLING CODE 4120–01–P

APPENDIX E

PROSPECTIVE PAYMENT
ASSESSMENT COMMISSION

REPORT AND RECOMMENDATIONS TO THE CONGRESS

MARCH 1, 1995

PROSPECTIVE PAYMENT ASSESSMENT COMMISSION

Stuart H. Altman, Ph.D., *Chairman*

Susan S. Bailis
Richard A. Berman
James D. Bernstein
Clay D. Edmands
William S. Hoffman, Ph.D.
Clark E. Kerr
James R. Kimmey, M.D.
Judith R. Lave, Ph.D.
Larry L. Mathis
Robert J. Myers
Donald R. Oder
Elliott C. Roberts, Sr.
J. Michael Sadaj, M.D.
Roxane B. Spitzer-Lehmann, Ph.D.
James R. Tallon
Jae L. Wittlich

Staff and Consultants

Donald A. Young, M.D., *Executive Director*
Laura A. Dummit, *Deputy Executive Director*
Stuart Guterman, *Deputy Executive Director*

Sharon B. Arnold, Ph.D.
John L. Ashby
Shawn M. Bishop
Thomas B. Bradley
Wylene Carlyle
Delores J. Curtis
Karen S. Fisher, J.D.
Gina M. Fortuna
Barbara J. Gage, Ph.D.
Timothy F. Greene
Joy M. Grossman, Ph.D.
Dana K. Kelley
Lynn L. Lewis
Craig K. Lisk
Ann-Marie Lynch
Mary Anne Miles
Julian H. Pettengill
Molly Ryan
Michelle A. Rosetta
Claire E. Sharda
Sarah S. Thomas
Jeannette A. Younes

The Prospective Payment Assessment Commission, created in 1983 by the legislation that established the Medicare prospective payment system for inpatient hospital services, advises the Congress and the Secretary of Health and Human Services on policies affecting Medicare payments to hospitals and other facilities. The Commission also studies industrywide effects of Medicare policies and important trends in the health care delivery system. On March 1 of each year, the Commission submits a report to the Congress with recommendations for improvements in Medicare policies and related subjects.

Prospective Payment Assessment Commission

300 7th Street, S.W.
Suite 301B
Washington, D.C.
20024
Tel (202) 401-8986
Fax (202) 401-8739

March 1, 1995

The Honorable Al Gore
President of the Senate
United States Senate
Washington, D.C. 20510

Dear Mr. President:

I am hereby transmitting to the Congress the annual report of the Prospective Payment Assessment Commission as required by Section 1886(e)(3) of the Social Security Act as amended by Public Law 101-508. This report presents a discussion of the evolving health care system and provides the views of the Commission regarding the effects of these changes on health care financing and delivery. In addition, 13 recommendations concerning Medicare payment policies are included. The report reflects the Commission's collective judgment about issues of substantial importance to beneficiaries, hospitals, other providers, and the Medicare program.

Sincerely,

Stuart H. Altman, Ph.D.
Chairman

Enclosure

Prospective Payment Assessment Commission

300 7th Street, S.W.
Suite 301B
Washington, D.C.
20024
Tel (202) 401-8986
Fax (202) 401-8739

March 1, 1995

The Honorable Newt Gingrich
Speaker of the House
United States House of Representatives
Washington, D.C. 20515

Dear Mr. Speaker:

I am hereby transmitting to the Congress the annual report of the Prospective Payment Assessment Commission as required by Section 1886(e)(3) of the Social Security Act as amended by Public Law 101-508. This report presents a discussion of the evolving health care system and provides the views of the Commission regarding the effects of these changes on health care financing and delivery. In addition, 13 recommendations concerning Medicare payment policies are included. The report reflects the Commission's collective judgment about issues of substantial importance to beneficiaries, hospitals, other providers, and the Medicare program.

Sincerely,

Stuart H. Altman, Ph.D.
Chairman

Enclosure

TABLE OF CONTENTS

Chapter *Page*

PROLOGUE—THE CHANGING HEALTH CARE ENVIRONMENT: THE COMMISSION'S VIEWS . . . 1

Controlling the Growth in Medicare Spending . . . 3
Strengthening Medicare's Managed Care Risk Contracting Program . . . 4
Changing Patterns of Subsidies Across Payers and Providers . . . 5
Assessing Further Reductions in Medicare Hospital Updates . . . 5
Protecting Access to Hospitals That Care for Underserved Populations . . . 6
Funding for Graduate Medical Education Programs . . . 7
Changing the Medicaid Program Through Demonstration Waivers . . . 8
Protecting Vulnerable Populations' Access to Services . . . 8

1. MEDICARE AND THE EVOLVING HEALTH CARE SYSTEM . . . 11

The Changing Health Care Marketplace . . . 14
Financial Constraints . . . 14
Provider Responses . . . 16
Quality and Access . . . 17
Health Care Spending and Costs . . . 17
Hospitals . . . 18
Other Facilities . . . 19
Medicare in the Changing Marketplace . . . 20
Medicare Spending . . . 21
Future Medicare Hospital Payments and Costs . . . 22
Medicare and Managed Care . . . 24
Conclusions . . . 24

2. RECOMMENDATIONS . . . 29

Recommendations for Fiscal Year 1996 . . . 31
Updating Payment Rates . . . 31
Recommendation 1: Update Factor for Operating Payments to PPS Hospitals . . . 32
Recommendation 2: Update Factor for Capital Payments to PPS Hospitals . . . 34
Recommendation 3: Single Operating and Capital Update Factor . . . 36
Recommendation 4: Update Factor for Hospitals Paid on the Basis of Hospital-Specific Rates . . . 37
Recommendation 5: Update Factor for PPS-Excluded Hospitals and Distinct-Part Units . . . 37
Recommendation 6: Update to the Composite Rate for Dialysis Services . . . 39
Improving PPS Payment Policies . . . 41
Recommendation 7: Level of the Indirect Medical Education Adjustment to PPS Operating Payments . . . 41
Recommendation 8: Improving Outlier Payment Policy . . . 42
Recommendation 9: Making DRG Payment Rates More Accurate . . . 44
Recommendation 10: Improving Annual Update Policies . . . 47
Recommendation 11: Improving Medicare Transfer Payment Policy . . . 49
Strengthening Hospital Outpatient Payment Policies . . . 49
Recommendation 12: Controlling the Volume of Hospital Outpatient and Other Ambulatory Services . . . 50
Recommendation 13: Changes to Medicare's Hospital Outpatient Payment Method . . . 51

APPENDIXES 53

A. Background Material and Analyses 55
Historical Overview of PPS Operating Updates and the Commission's Update Framework 57
PPS Hospital Market Basket 65
Scientific and Technological Advances 67
Productivity Improvement 75
Adjustment for Case-Mix Change 81
Capital Update Framework 85
Fiscal Year 1996 Update for Payments to Dialysis Facilities 89
B. Technical Report Series 95
C. Biographical Sketches of Commissioners 111
D. Statutory Mandate of the Commission 117
E. Change in DRG Relative Weights from Fiscal Year 1994 to Fiscal Year 1995 129

LIST OF TABLES

Page

Chapter 1. Medicare and the Evolving Health Care System

1-1 Medicare Home Health Care Utilization, 1980-1994 20
1-2 Medicare Skilled Nursing Facility Utilization, 1980-1994 21
1-3 Medicare PPS Per Case Payments Relative to Costs, Under Three Cost Growth Scenarios, Fiscal Years 1994-1997 (In Percent) 23

Chapter 2. Recommendations

2-1 Recommended Update Factor for PPS Hospital Operating Payments, Fiscal Year 1996 33
2-2 Recommended Update Factor for PPS Hospital Capital Payments, Fiscal Year 1996 35
2-3 Estimated Fiscal Year 1996 Average Increase in Per Case Payments Under Fully Prospective Rates 36
2-4 Recommended Update Factor for PPS-Excluded Hospitals, Fiscal Year 1996 38

Appendix A. Background Materials and Analyses

A-1 Comparison of Increases in Hospital Market Basket, Average PPS Updates, and PPS Payments Per Case, Fiscal Years 1984-1995 (In Percent) 57
A-2 ProPAC's Decisions on Update Adjustments, 1986-1995 (In Percent) 60
A-3 Case-Mix Change Estimates Used in ProPAC's Update Recommendations, 1986-1995 (In Percent) 62
A-4 Annual PPS Updates Relative to PPS Hospital Market Basket Increase, 1990-1994 (In Percent) 63
A-5 Technologies Contributing to PPS Operating Costs Associated with Scientific and Technological Advances, Fiscal Years 1990-1995 69
A-6 Change in Hospital Aggregate Productivity and Its Components, 1984-1993 (In Percent) 77
A-7 Change in the Use of Hospital Inputs, 1984-1993 (In Percent) 78
A-8 Change in Labor Productivity and the Effects of Supply and Service Inputs and Capital Inputs in Measuring Hospital Aggregate Productivity, 1984-1993 (In Percent) 79
A-9 Change in Labor Productivity in the General Economy, 1973-1994 (In Percent) 79
A-10 Estimated Impact of Cost-Increasing Technologies for Dialysis Facilities, Fiscal Year 1996 (In Millions) 90
A-11 Productivity Indicators for Hospital-Based and Independent Dialysis Facilities, 1990-1993 91

LIST OF FIGURES

Chapter 1. Medicare and the Evolving Health Care System

1-1 U.S. Population Enrolled in Health Maintenance Organizations, 1985-1994 (In Percent) 15
1-2 Medicaid Managed Care Enrollment, 1991-1994 (In Percent) 16
1-3 Real Average Annual Change in National Health Expenditures, 1960-1993 (In Percent) 18
1-4 Real Average Annual Change in Medicare Expenditures Per Enrollee and Private Health Insurance Expenditures Per Person, 1979-1993 (In Percent) 18
1-5 Annual Change in Hospital Costs Per Adjusted Admission, 1987-1994 (In Percent) 18
1-6 Average Annual Change in Length of Stay: 1985-1991 and 1992-1994 (In Percent) 19
1-7 Change in Hospital Workers' and All Civilian Workers' Compensation, 1992-1994 (In Percent) 19
1-8 Annual Change in Hospital Costs Per Case, 1967-1992 (In Percent) 20
1-9 Share of Total Medicare Spending, by Sector, 1991 (In Percent) 21
1-10 Contributors to Increase in Medicare Spending, by Sector, 1991-1993 (In Percent) 21
1-11 Real Average Annual Growth Rates Per Enrollee for Selected Medicare Services, 1987-1993 (In Percent) 22
1-12 Medicare Beneficiaries Enrolled in Managed Care Risk Contracting Programs, 1988-1994 (In Percent) 24

Appendix A. Background Material and Analyses

A-1 PPS Hospital Market Basket Increases, Forecasts, and Errors, 1984-1994 (In Percent) 59
A-2 Change in Labor Productivity, by Industry Group, 1980-1992 (In Percent) 80
A-3 Annual Medicare Case-Mix Index Change, 1985-1995 (In Percent) 82

Prologue

The Changing Health Care Environment: The Commission's Views

Medicare's payment policies must be considered in the context of changes occurring in the financing and delivery of health care. Among the most significant of these are the growth of capitated payment methods and managed care techniques in the private insurance market, together with continuous medical advances that allow the movement of services out of acute inpatient hospital settings. Important factors contributing to these developments include constraints on payments from private payers and increased competition among providers and payers.

The share of total health care spending devoted to acute inpatient hospital care continues to decline as per capita utilization decreases and as more services are furnished in ambulatory, post-acute, and other non-hospital settings. This reduced use of inpatient hospital services is creating excess capacity and greater competition for patients. Many private payers are taking advantage of this situation to negotiate lower payments for inpatient services. To maintain occupancy, hospitals are granting larger discounts to health plans and assuming greater financial risk in their relationships with insurers. Hospitals are also responding to competitive pressures by consolidating and developing integrated delivery systems in an attempt to maintain market share and control over their revenues. The development of new arrangements among insurers, providers, and physicians is altering longstanding financial incentives and the patterns of care furnished to all patients.

Medicare has developed policies that curb its spending by controlling its payment for each unit of service furnished. In the early 1980s, Medicare expenditures per enrollee were growing more rapidly than private health expenditures per insured person. Following implementation of Medicare's prospective payment system (PPS) for inpatient hospital care and subsequent constraints on payment for other services, this pattern reversed, with Medicare spending growing less rapidly than that in the private sector. More recently, Medicare expenditures per enrollee have again escalated, while private spending growth has continued to decline. Medicare's predominantly fee-for-service payment methods contain strong incentives to increase the number and intensity of services furnished. Much of the recent acceleration in Medicare spending is due to the rising number of beneficiaries receiving services and the number of services provided to each.

Changes in the financing and delivery of health care services have the potential to make the health care system more efficient and to control the rise in spending for medical care. At the same time, however, these changes may have important consequences for Medicare beneficiaries. The effects of heightened competition in the health care sector must be considered as Medicare updates and modifies its payment policies, and as the program considers methods to constrain the rapid increase in the volume of services furnished to its enrollees.

In this prologue to its annual report to the Congress, the Prospective Payment Assessment Commission (ProPAC) presents its views on important interactions between Medicare policies, increased competition, and restructuring in the financing and delivery of medical care. The Commission brings this information to the attention of the Congress and the public as a series of alerts concerning important implications these changes have for the Medicare and Medicaid programs.

Alert 1: Controlling the Growth in Medicare Spending

A significant portion of the growth in Medicare expenditures is due to increases in the number of Medicare enrollees and their greater use of

4

services. Substantial reductions in the rise in Medicare spending cannot be achieved solely by lowering payments to providers for each unit of service furnished. Over the long term, fundamental changes in the program are needed to control the rise in the volume of services in order to curtail spending to desired levels.

- Medicare continues to rely primarily on fee-for-service payment policies, based on the type of provider. These policies encourage increases in the number and types of providers as well as the volume of services furnished. To curb the overall rise in spending, the Medicare program must control both the total number of services furnished over an episode of illness and the payment for each unit of service.

- Medicare has lagged behind the private sector in encouraging prevention and health promotion activities, including self-help and education programs. Such initiatives might improve the health of Medicare beneficiaries, as well as reduce utilization of acute and post-acute health care services.

- About 25 percent of the projected rise in real (inflation-adjusted) Medicare spending over the next five years is due to continued growth in the number and average age of Medicare enrollees. A portion of the remaining anticipated increase is accounted for by growth in payments per unit of service above the level of inflation. The largest contributor to the expected escalation in spending, however, is an increase in both the percentage of enrollees receiving services and the number of services they receive.

- Changes in Medicare payment policies over the past decade have controlled the growth in payment per hospital admission. During this time, Medicare spending for hospital acute care inpatient services rose less than spending for services furnished in other settings. Recently, the growth in inpatient hospital expenditures has gone up modestly as admissions again have begun to rise.

- Since 1988, Medicare spending for post-acute services furnished by skilled nursing facilities, home health agencies, and rehabilitation and long-term care hospitals has grown rapidly. Primarily responsible for this is the rapid growth in the volume of services furnished, reflecting increases in the number of beneficiaries served and in the quantity and intensity of services provided to each beneficiary. Spending for hospital outpatient and end-stage renal disease dialysis care also is accelerating, driven by utilization growth.

Alert 2: Strengthening Medicare's Managed Care Risk Contracting Program

Enrollment of Medicare beneficiaries under managed care risk contracts has lagged behind that in the private sector. Certain features of Medicare's risk contracting program appear to discourage some plans from participating and others to deter beneficiaries from enrolling. Low enrollment and flaws in the program limit potential Medicare savings.

- Enhancing the opportunity for Medicare beneficiaries to select the risk contracting program and improving the program's payment methods could help slow spending growth. Risk contracting will be increasingly important as people now in health maintenance organizations (HMOs) want to stay enrolled as they age into Medicare. The number of individuals likely to find this option desirable may grow with the rise in private sector enrollment in HMOs and preferred provider organizations.

- Medicare's payment under the risk contracting program is based on the adjusted average per capita cost (AAPCC) of furnishing care to fee-for-service beneficiaries in the enrollee's county of residence. Linking the level of the capitated payment directly to the level of Medicare spending in the fee-for-service sector fails to correct for differences in practice patterns and service utilization between the two sectors. This limits the program's ability to constrain spending growth.

- The AAPCC also lacks an adequate risk adjustment. Consequently, HMOs have an incentive to avoid higher-cost, sicker beneficiaries. The ability of HMOs to select low-cost, healthier enrollees can eliminate the savings from the

risk contracting program, and in fact may increase Medicare spending as a recent evaluation indicated. In addition, Medicare's policy of allowing beneficiaries to disenroll on a monthly, rather than annual, basis may contribute to biased selection. It could also disrupt the continuity of care.

- Determining the AAPCC annually on a county basis results in substantial payment variation among neighboring counties and from year to year. As a result, many HMOs are discouraged from participating in the risk contracting progam because of low payments in their service areas and payment variability from one year to the next. In addition, the AAPCC methodology does not account for the costs of services provided to Medicare beneficiaries by Department of Veterans Affairs and other military facilities. Consequently, Medicare capitated payments in some areas may be inappropriately low, further discouraging HMO participation.

- The Medicare program needs to provide beneficiaries with more information regarding available plans and how they compare. This information should include findings regarding the quality of care delivered to beneficiaries by HMOs in their area and data on enrollee satisfaction with alternative plans.

Alert 3: Changing Patterns of Subsidies Across Payers and Providers

A price competitive health care system will alter past patterns of subsidies across payers and providers. The ability of providers to cover losses from Medicare and Medicaid patients with excess revenues from private payers will diminish as competition intensifies.

- Hospitals have always used gains from some payers to cover losses from others. They have also relied on direct and indirect subsidies to help finance the care they furnish to the uninsured. These practices have spread rapidly in recent years. But as competition accelerates, payers will become less willing to finance these extra costs.

- Over the past decade, Medicare and Medicaid have curtailed the rise in their per case payments to hospitals. Instead of reducing cost growth as public payers constrained payments, however, hospitals responded by increasing revenue from private payers. In 1992, hospitals spent $26 billion more than they received for furnishing services to Medicare, Medicaid, and uninsured patients. In the same year, they took in $29 billion in revenue above their costs of providing care to privately insured patients. Because hospitals could get additional revenue from private payers, Medicare was able to slow payment growth without a commensurate decrease in the cost of furnishing care to its beneficiaries.

- Many hospitals will have difficulty securing extra revenues from private payers to subsidize losses from public programs because of accelerating price competition. To remain financially viable, therefore, they will have to constrain the growth in the costs of furnishing care to all patients.

- This deceleration in hospital costs per case began in late 1992. Contributing to this trend were improved labor productivity, smaller wage and salary increases, and a more gradual rise in the cost of supplies and services that hospitals purchase. In addition, hospital length of stay has declined for elderly and nonelderly populations alike. Consequently, growth in the average cost per case is moderating for Medicare and other payers.

- Medicare's payments relative to the costs of services provided to beneficiaries continue to be below those of most private payers. Because of the recent slowdown in cost growth, however, subsidies from private payers that offset these losses will not need to increase. Indeed, though still substantial, these subsidies appear to have dropped in 1994.

- Surplus revenue from private payers also has been used to subsidize losses from Medicaid and uninsured patients. If hospitals are unable to continue to obtain these additional revenues, they may avoid providing care to some public program beneficiaries and to the uninsured. Moreover, the pressure to do so is likely to rest most heavily on certain hospitals.

Alert 4: Assessing Further Reductions in Medicare Hospital Updates

While the growth in Medicare hospital per case payments can be reduced further, it is important

6

that this reduction be consistent with continued deceleration in total hospital costs. Unless that happens, access to care and the quality of care for beneficiaries will suffer.

- Since the third year of PPS, the annual update factor has been less than the rise in the market basket index, which measures the rate of inflation in the prices of goods and services hospitals purchase. Increases in inpatient hospital payments per case have been somewhat above the market basket. Hospital costs, however, have grown much faster than Medicare payments. As a result, Medicare payments are about 90 percent of the cost of care for its beneficiaries.

- Previous Federal constraints on payment updates have not affected the quality of services furnished to Medicare beneficiaries, since hospitals have been able to obtain sufficient revenue from private payers to cover continuing cost increases. This situation is changing as price competition in the private sector intensifies, leading private payers to curb the increase in hospital payments and hospitals to slow the rise in per case costs. Because it is unlikely that hospitals will be able to obtain additional revenue from private payers, further constraints on the PPS update factor and the rate of increase in payments should be consistent with the continued slowing in the growth of hospital costs.

- The financial condition of the average hospital continues to be good, although many individual hospitals are experiencing financial distress. One of the important factors determining the financial status of a hospital is its mix of patients and payers. Many Medicare beneficiaries rely on hospitals that also treat a large number of Medicaid patients and people without health insurance. Such facilities have limited ability to obtain surplus revenues from private payers to cover losses from the care of their other patients. The gap between public and private payments relative to costs disadvantages these hospitals in terms of their ability to maintain revenues and to compete with other hospitals. Additional across-the-board reductions in the PPS update factor would be hardest on those hospitals that treat the largest number of Medicare patients.

- The burden of furnishing care to a disproportionate share of Medicare and Medicaid patients and the uninsured is not spread equally across geographic areas or types of hospitals and other providers. Certain providers are less able to respond to reduced growth in public program payments. The beneficiaries served by these hospitals, therefore, may be particularly vulnerable.

Alert 5: Protecting Access to Hospitals That Care for Underserved Populations

Many Medicare beneficiaries rely on hospitals that are located in remote rural areas or that care for large numbers of the uninsured. The Medicare program has special payment provisions to assist these sole community and disproportionate share hospitals. Substantial reductions in these payments might adversely affect access to services for Medicare beneficiaries living in such areas. These payments, however, could be better targeted to hospitals that are truly isolated or that furnish a large share of uncompensated care.

- In many rural areas, there is only one community hospital available to provide emergency and routine care. Facilities in these areas frequently are confronted with special problems due to health work force shortages, low patient volumes, or other factors that limit their ability to control costs or effectively compete with other hospitals. The Medicare program has helped sole community hospitals through special payment policies to ensure that its beneficiaries have access to care.

- Many Medicare beneficiaries also rely on hospitals in underserved areas that furnish large amounts of care to the poor and the uninsured. These hospitals frequently have problems recruiting physicians and other staff, and meeting the special needs of their patients. Further, they tend to have a small share of privately insured patients, which limits their ability to subsidize losses from Medicare, Medicaid, and the uninsured. The extra revenue such hospitals receive from the Medicare program through disproportionate share payments helps to ensure reasonable access to care for enrollees in underserved communities. Reducing these payments

to hospitals that are the only source of care in a community, without also expanding coverage to the uninsured or otherwise subsidizing their care, will adversely affect their financial viability. This, in turn, could threaten access for enrollees in public programs.

- Some facilities benefit from the payment provisions for sole community or disproportionate share hospitals even though they do not serve these special functions. It is possible, therefore, to target payment reductions to protect access for Medicare enrollees served by hospitals that are truly isolated or that have the largest shares of low-income patients.

Alert 6: Funding for Graduate Medical Education Programs

Medicare payments for the costs associated with graduate medical education programs have become a particularly important source of revenue for teaching hospitals in the absence of explicit financial support for these activities from other payers. This is especially true because increasing competition in the private sector is making it harder for teaching facilities to obtain the higher payment rates needed to cover the added costs of their graduate medical education programs. Nevertheless, the Commission believes it is possible to reduce Medicare's graduate medical education adjustment by about 40 percent over the next three years.

- Many Medicare beneficiaries rely on hospitals that maintain postgraduate education and training programs for physicians and nurses. These hospitals incur additional indirect patient care costs related to their teaching mission. They also have direct costs due to resident salaries and benefits, faculty supervision, and overhead. The added costs of maintaining teaching programs have been explicitly recognized by the Medicare program and implicitly recognized through higher payment rates by some private payers.

- As competition in the health care system intensifies, the additional costs borne by teaching hospitals will place them at a disadvantage relative to other facilities. The role, scale, function, and number of these institutions increasingly will be challenged. In the absence of alternative methods for financing medical education, patient care revenues will continue to be the major source of support for these activities.

- Medicare's indirect and direct medical education payments are an important source of revenue for this group of hospitals. The level of the indirect medical education adjustment, however, exceeds the added costs of furnishing care to enrollees. The Commission has recommended reducing payments to reflect only the difference in patient care costs that is related to teaching intensity. Doing this over three years will achieve the ultimate objectives of the Medicare program, while allowing teaching hospitals to adjust to the changing health care environment. In addition, direct graduate medical education payments have risen with the growth in the number of residents. Further evaluation of these payment policies is necessary, including better understanding of the value of training an increasing number of residents and the wide variation in per resident costs across hospitals. Medicare should also examine the relationship between its payments to teaching physicians for services provided to beneficiaries and its payments to facilities for graduate medical education.

- Because of Medicare's teaching and disproportionate share payments, the PPS financial performance of major teaching hospitals is better than that of any hospital group. Partly because of the significant amount of uncompensated care that many furnish, however, their overall financial health ranks among the poorest. The magnitude, distribution, and timing of any change in Medicare payments to these hospitals should take this into account.

- Medicare's capitated payment under its managed care risk contracting program does not appropriately distribute payments for the costs of teaching programs or of caring for a disproportionate share of low-income patients. The capitated rate reflects the extra Medicare payments provided to teaching and disproportionate share hospitals in the fee-for-service sector, regardless of whether Medicare HMO enrollees receive care in those hospitals. The relationship between HMOs and the teaching

8

and disproportionate share hospitals in their service area warrants further evaluation.

Alert 7: Changing the Medicaid Program Through Demonstration Waivers

Many state Medicaid programs are using research and demonstration waiver authority to replace traditional fee-for-service payment systems with capitated, managed care arrangements. Some states are using savings from enrolling the Medicaid population in managed care to cover additional individuals. These state initiatives have the potential to slow spending growth per enrollee and enhance continuity of care. However, oversight of enrollment, service patterns, and quality of care is necessary to protect the Medicaid population from unscrupulous plans and providers.

- Demonstration programs that enroll all of a state's Medicaid recipients in managed care plans represent a significant change for this vulnerable population. Capitated payment systems contain strong incentives to control the volume of services furnished. Converting Medicaid from a fee-for-service to a capitated, managed care system, therefore, can slow the rise in spending per enrollee. Capitated payment methods may also improve quality by promoting continuity of care, increasing the availability of primary care providers, and encouraging the appropriate use of other needed services. These programs, however, limit recipients' choice of providers and may alter covered benefits.

- Currently, eight states have statewide Medicaid research and demonstration projects authorized under section 1115 of the Social Security Act. Nine other states have waiver applications that are pending authorization. Section 1115 projects allow states to receive Federal Medicaid matching funds for the existing Medicaid population and others who become eligible under the terms of the demonstration. Because the projects are authorized under demonstration authority, some of the Medicaid program regulations are waived. States may alter provider reimbursement requirements, such as disproportionate share payments to hospitals and cost reimbursement for federally qualified health centers. Further, voluntary disenrollment and certain plan participation conditions may be waived. This is in contrast to the freedom of choice waivers authorized under section 1915(b), which allow states to enroll selected recipients in managed care programs for limited periods. Consequently, the 1115 projects are altering the eligibility, benefit, service delivery, and regulatory oversight of the Medicaid program in states with waivers.

- State demonstration projects using managed care approaches for Medicaid enrollees may expand the availability of Medicaid coverage to otherwise uninsured groups and improve the continuity of care for those who are already enrolled. These projects, however, must be carefully evaluated for any adverse effects on these vulnerable populations, including the impact of how restricting provider choice and changing benefit design would affect quality of care.

- The effects of these changes on providers that have traditionally cared for these populations should also be monitored. Many participating states are redistributing disproportionate share payments through capitated rates for recipients. Consequently, hospitals that historically have served many poor patients may lose these extra payments. Managed care plans also may reduce their payments to these hospitals or choose other providers. Using savings from enrolling recipients in managed care to expand coverage for the uninsured, however, may provide additional revenue to these hospitals. The effects of changes in revenue on the ability of this important group of hospitals to care for Medicaid enrollees and the remaining uninsured population must be assessed. The impact of Medicaid waivers on access to care for individuals who have traditionally relied on rural health clinics, federally qualified health centers, and other providers that serve vulnerable populations should also continue to be examined.

Alert 8: Protecting Vulnerable Populations' Access to Services

In response to the increasingly competitive environment in which they operate, health plans, hospitals, and other providers are developing comprehensive, integrated financing and deliv-

ery systems to strengthen their market position and improve their efficiency. Access to care may decline for people without insurance, insured individuals living in underserved areas, and those with special needs if the providers they have traditionally relied upon cannot survive in the changing marketplace.

- A competitive insurance and delivery system contains strong incentives to enroll healthy, low-cost subscribers and to avoid the sickest, most costly patients and the providers that traditionally have served them. To protect quality and access for vulnerable populations, the premiums paid to plans or insurers must appropriately reflect the risk of their enrollees. Adequate risk adjustment of premiums would also improve the management of patient care and service delivery.

- Capitation and managed care techniques may be effective, in part, because they limit an individual's choice of and access to providers. People with special needs and those living in medically underserved areas, however, may be vulnerable because of these constraints on access. Plans should ensure that all their enrollees have reasonable access to basic services in their community and appropriate referrals to specialty services.

- A highly competitive health care financing and delivery system can control expenditure growth by consolidating the delivery of services and reducing excess capacity. Competition, however, will also limit the ability of providers to subsidize the care furnished to the uninsured. Consequently, access to care for the insured and uninsured alike may decline if consolidation leads to the closure of providers that serve large numbers of uninsured persons. In addition, extensive concentration in the health care system could restrict its capacity to provide certain types of services, require patients to travel too far, and reduce access to appropriate care for certain populations.

- The changing structure of the financing and delivery system creates new challenges for the legal system. Competition can help control health care spending through price reductions, consolidation, and increased efficiency. At some point, however, excessive concentration may reduce effective price competition.

Chapter 1

Medicare and the Evolving Health Care System

America's health care system is undergoing a transformation, resulting from spending that consistently has risen much faster than can be explained by population growth and general inflation for the past three decades. A major restructuring in the financing and delivery of care is under way that will have lasting effects on how care is provided to the entire population, including Medicare beneficiaries. Before looking at the changes, however, it is important to understand the context in which they are taking place.

Among the factors contributing to higher health care spending are greater demand for services and the development, diffusion, and use of medical and technological advances. Not only are people receiving more services, but these are of higher intensity. The utilization spiral historically has been fueled further by the nature of health care financing, characterized by third-party insurance coverage and fee-for-service payment. Providers traditionally have been paid on a per service basis, linking their revenues with the quantity of services they furnish. Health insurance has shielded consumers from the direct cost of service use.

The dynamics of the medical marketplace also differ from those in the markets for most other goods and services—and may help explain why costs have grown. In most markets, consumers choose the lowest-priced product of acceptable quality, but price has been less important in the health care sector, partly because of insurance. Additionally, physicians generally select the services provided; rarely—until recently—have they been held accountable for patient care costs. Further, hospitals and other providers have competed for patients based on the perceived quality of their products, rather than on price. Frequently, competition has entailed acquiring costly technologies, expanding capacity, and offering services and amenities with little attention to cost.

All this is changing. Recent trends indicate that the growth in health care spending is moderating. Competition among insurers and providers is increasing, with price becoming a more important consideration in health care purchasing decisions. Employers and other buyers of insurance are demanding lower premiums. Third-party payers are using capitation and other managed care techniques to constrain their costs by negotiating price reductions, sharing financial risk with providers, and controlling service use.

For a decade, Medicare has attempted to curb its expenditures by limiting the rise in payment for each service that is furnished. For example, Medicare policies control the payment for each hospital discharge as well as for each unit of service delivered by physicians and other providers. Nevertheless, program spending has continued to grow rapidly because there are more beneficiaries, and because the number of services each Medicare patient receives is rising.

The major restructuring of the financing of health care services will affect how health care is provided. Increased price competition, together with continued payment constraints by government payers, has the potential to slow the rise in health care spending by reducing excess capacity, eliminating services of little or no value, and enhancing overall system efficiency. Greater competition, however, can have adverse effects if insurance plans or providers attempt to control their costs by accepting only the healthiest individuals or by failing to provide appropriate services. People who are uninsured or at high risk for illness, those who cannot afford to travel to selected providers, and those living in underserved areas may be at a disadvantage in a highly competitive health care system. The providers that care for these vulnerable populations and those that furnish other socially valuable services, such as medical education, also may be disadvantaged.

14

In this chapter, the Prospective Payment Assessment Commission (ProPAC) examines the evolving health care marketplace and Medicare's role within that marketplace. Changes in health care financing and service delivery are described. Recent health care spending trends are presented, along with the relationship between Medicare's payment policies and those of other payers. The increased competition and restructuring occurring in the financing and delivery of medical care are likely to affect the rate of growth and the distribution of spending by the private sector and by government programs. These changes could, therefore, have important consequences for access, service use, and quality of care.

THE CHANGING HEALTH CARE MARKETPLACE

Between 1980 and 1993, national health care spending grew more than 250 percent, largely because of the financial environment in which health care services are delivered.[1] Insurers traditionally played a passive role in managing spending because they were able to increase insurance premiums. Employers—the predominant payers of health insurance premiums—either raised product and service prices or delayed wage increases or other benefits to pay for higher premiums.

As a result of this financial environment, hospitals and other providers have attempted to improve the quality of their services with little regard to the cost. Capital improvements and expansions, along with technological advances, have enhanced the quality of and access to health care. At the same time, however, they have contributed to the tremendous growth in health care spending—from 9 percent of the nation's domestic output in 1980 to nearly 14 percent in 1993.[2]

Payment methodologies also have played a significant role in the rise of health care expenditures. Providers historically have been paid based on their costs or charges for each unit of service. These cost-based and fee-for-service payment methods give providers incentives to increase the frequency, duration, intensity, and specialization of services, leading to growth in overall spending.

In the early 1980s, Medicare expenditures were outpacing those in the private sector. To contain spending, Medicare implemented several payment policy changes, most notably the prospective payment system (PPS) for inpatient hospital care. Under this system, hospitals generally receive a fixed payment for each patient discharge, regardless of the amount or duration of services provided. PPS helped contain the growth in inpatient expenditures, thereby reducing the increase in total program spending.

Medicare's PPS, together with a decline in hospital admissions, resulted in an initial slowdown in overall hospital expenditures. This phenomenon was temporary, however, due to the relative lack of spending controls by other payers. While PPS constrained Medicare inpatient hospital payments, hospital costs continued to grow at historical rates. As their costs increasingly exceeded Medicare payments, many hospitals generated larger revenue surpluses from private insurers, a practice commonly referred to as cost shifting. Because they were able to cost shift, many health care providers did not have to confront financial pressures imposed by Medicare and some other payers. Cost shifting also meant that the constrained growth in Medicare payment rates generally did not impede access to or quality of care for Medicare beneficiaries.

Medicare's inpatient hospital payment policies hastened the decline in hospital admissions and length of stay; technological advances also contributed to this trend. An increasing number of services are provided in other sites, such as hospital outpatient and ambulatory settings, post-acute facilities, and the home. These factors have contributed to an overall excess in hospital inpatient capacity.

Recent trends indicate that price is becoming a more important consideration in health care purchasing decisions. Many of these changes began during the 1980s, but they have accelerated recently. This may be attributable to various factors, including a growing share of employers' dollars being spent for health care benefits, as well as a greater awareness of spiraling health care spending, highlighted during the 1994 debate on national health care reform.

Financial Constraints

The growth in health care expenditures is causing many buyers (primarily employers) to seek

insurers or benefits managers that offer health benefit packages at lower premiums. Insurers are implementing new strategies to contain spending by controlling the payment per unit of service, as well as the total number of services furnished. These approaches include converting provider payment methodologies from fee for service to more comprehensive payment units—such as per day and per case or per capita—and implementing utilization review programs. Consequently, providers face different financial incentives, as they bear more of the risk associated with health care cost increases.

Many health care purchasers are turning to managed care plans, which often have lower premiums than conventional indemnity plans. The term managed care encompasses a variety of arrangements, but all rely on restricting the choice of health care providers and limiting clinicians' options to prescribe treatments. Common plan types include health maintenance organizations (HMOs), preferred provider organizations (PPOs), and point-of-service plans.

Managed care plans use various techniques to control their costs. Subscribers are limited in their choice of providers or given strong financial incentives to choose particular providers. By specifying doctors and hospitals, managed care plans can negotiate favorable payment rates and select providers that demonstrate lower-cost practice patterns. Further, plans may share financial risk with providers by using capitated payment arrangements or, in the case of hospitals, a per diem or per case payment. Other techniques include utilization review mechanisms and requirements that all specialized services be preauthorized by a primary care practitioner. Many managed care plans encourage preventive services to detect or avoid future costly conditions. Some control costs by acquiring hospitals and employing physicians so that they can provide services directly to subscribers.

The number of people enrolled in some form of managed care is growing rapidly. Enrollment in HMOs—the most tightly controlled managed care arrangement—more than doubled between 1985 and 1994, from 8 percent of the population to about 19 percent (see Figure 1-1). While HMO membership is expanding at the national level,

Figure 1-1. U.S. Population Enrolled in Health Maintenance Organizations, 1985-1994 (In Percent)

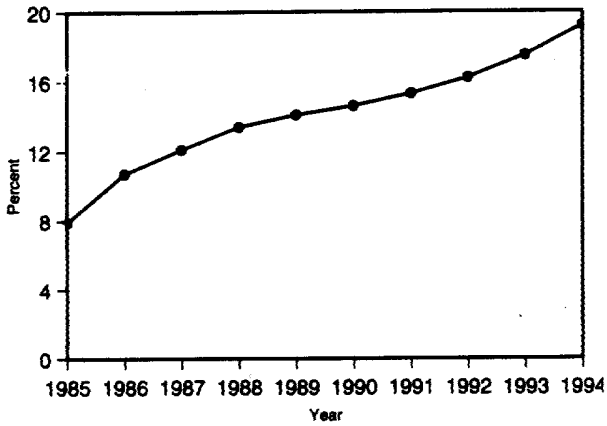

Note: Data for 1985-1988 are reported as of June 30; data for 1989-1993 reported as of December 31; 1994 data are estimated as of December 31, 1994.

SOURCE: Group Health Association of America, *Patterns in HMO Enrollment*, June 1994, and the Department of Commerce, Bureau of the Census.

HMO market penetration varies widely at the state level. In California and Massachusetts, for example, almost 35 percent of residents belonged to an HMO in 1993, compared with Alaska, West Virginia, and Wyoming, where there was virtually no HMO activity.[3]

Enrollment in PPOs and other types of managed care also is accelerating. PPO subscribers generally have more choice of providers, although they are encouraged to use particular ones through financial incentives. In firms with 100 or more employees, PPO enrollment rose from 16 percent of all insured workers in 1991 to 26 percent in 1993.[4] Similarly, PPO enrollment for workers in smaller firms went up from 13 percent to 18 percent between 1990 and 1992.[5] Data on other forms of managed care are limited; however, anecdotal evidence suggests they are experiencing similar trends.

Managed care methods increasingly are affecting people who remain in fee-for-service indemnity insurance arrangements. Many indemnity insurance plans are incorporating utilization management features. In 1993, 90 percent of workers in firms with 100 or more employees were enrolled in fee-for-service plans that required certain services to be preauthorized by the insurer.[6]

16

A growing number of states are attempting to control rising Medicaid expenditures by establishing managed care programs for Medicaid recipients. States generally need a waiver from the Federal government to implement such programs. Currently, 44 states and the District of Columbia have some type of managed care program in place, ranging from primary care case management to mandatory HMO enrollment.[7] These programs usually encompass specific geographic areas or populations, but several states have implemented statewide programs. The number of Medicaid recipients enrolled in managed care plans increased 66 percent between 1993 and 1994, from 4.8 million to nearly 8 million.[8] Managed care enrollment grew from almost 10 percent of the Medicaid-eligible population in 1991 to nearly 24 percent in 1994 (see Figure 1-2).

Provider Responses

Changes in the financing of health care are causing providers to reconsider how they do business. Confronted with intensified pressures to compete on the basis of price, they have three choices: control costs, increase volume in order to raise revenues, or both. Given changing financial incentives, the challenge for health care providers is to manage care delivery—and the resources used to provide that care—more effectively.

For hospitals, this is especially important. The combined growth in risk sharing arrangements, utilization review, and technological innovations has exacerbated the problem of excess capacity. Many services that previously were furnished on an inpatient basis are now being delivered in ambulatory settings. In addition, patients with conditions that require an inpatient stay are recovering in post-acute facilities and at home. The heightened demand for nonacute services has stimulated growth in the number and type of providers that compete for patients. Among these are hospital outpatient departments; free-standing ambulatory, surgical, and diagnostic imaging centers; rehabilitation facilities; and home health agencies. Insurers and managed care plans are capitalizing on the excess inpatient capacity to negotiate favorable prices for hospital services. Competition also is rising in other sectors, as private payers use managed care techniques to channel patients to selected physicians and other providers.

Figure 1-2. Medicaid Managed Care Enrollment, 1991-1994 (In Percent)

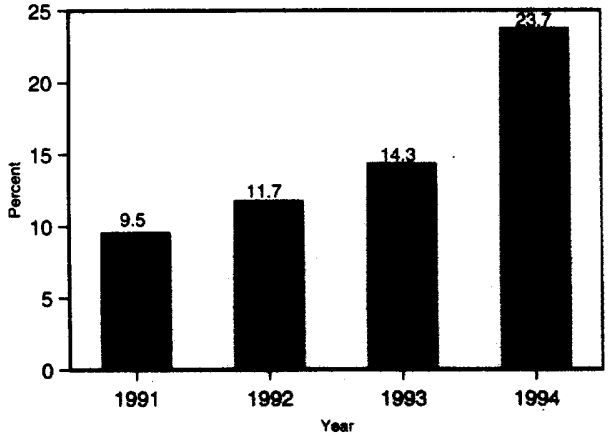

SOURCE: Health Care Financing Administration, Office of Managed Care.

To succeed in the increasingly competitive environment, hospitals and other providers are seeking ways to strengthen their market position. These methods range from developing outpatient and post-acute components to forming joint ventures with other providers and, in some cases, merging hospitals and entire hospital systems. The amount of collaboration between providers is widespread and unprecedented. The extent of this activity varies and often is directly related to the private sector market forces within an area. Each market differs, and these differences influence how providers respond to growing price competition. Areas heavily penetrated by managed care arrangements, for instance, are seeing more and more provider collaboration.

One of the more significant structural changes in the health care industry is the formation of integrated service delivery networks. These networks jointly market a comprehensive set of services to health benefit plans, insurers, or purchasers. They try to achieve savings through economies of scale and scope and the coordination of patient care.

Networks may include otherwise competing providers as well as those offering complementary or unrelated services. Besides physicians, they also may incorporate acute and post-acute facilities, other ambulatory-based providers, and, in some cases, an insurance component. By participating in networks, hospitals and other providers can compete more

effectively for managed care contracts, thereby increasing their market share and improving their financial condition.

Quality and Access

Changes in the financing and delivery of health care services are likely to affect the type, amount, and quality of services people receive. Access to care for certain individuals, particularly those without insurance, may also be compromised in a price-competitive environment. An estimated 39.7 million Americans (15.3 percent of the population) lacked health insurance coverage during the 1993 calendar year, an increase of 1.1 million over 1992.[9] The amount and quality of services used by uninsured patients are lower than for the rest of the population. Uninsured persons visit a physician less often and have fewer hospitalizations despite their poorer health status.[10] Those who are hospitalized are sicker on admission; use fewer costly, discretionary services; and appear to have a higher risk of death, both in the hospital and after discharge.[11]

With rising price competition in the marketplace, these disparities could be exacerbated. As payers negotiate larger discounts from providers, those that serve a population made up predominantly of Medicaid enrollees and the uninsured will be increasingly disadvantaged. Fewer payers may be willing to finance care to the uninsured through cost shifting, and fewer providers may be willing to take on this financial burden.

Changes in the health care market are also likely to affect the care received by the insured population. Many studies have shown that HMO enrollees have different utilization patterns, compared with members of traditional indemnity fee-for-service health insurance plans. HMO enrollees have lower hospital admission rates and more physician office visits than non-enrollees.[12] It appears that managed care physicians substitute ambulatory care for at least a portion of inpatient care. In addition, these physicians provide less intensive care in both inpatient and ambulatory settings compared with their fee-for-service counterparts.[13] Despite differences in the patterns of care furnished, the quality of care and health outcomes do not appear to differ between HMOs and fee-for-service plans. Moreover, HMO consumer surveys indicate a high degree of satisfaction.

Some have argued that the lower utilization rates in HMOs and other managed care plans are due to favorable enrollee selection. Another explanation is the reliance on physician "gatekeepers" to authorize the use of specialty services and otherwise coordinate care. It is clear, however, that providers paid a predetermined amount for furnishing comprehensive services have incentives to minimize the quantity and intensity of those services. How this will affect the quality of health care in the future is not known.

Research has documented wide variation in the use of health care services by various population groups.[14] While some of this variation may be appropriate—reflecting, for example, differences in patients' health status—much may be inappropriate and undesirable. To the extent that providers constrain needless use and control the intensity of services that do not improve patient outcomes or are furnished inefficiently, quality of care can be maintained or even improved. Providers can also improve quality and possibly avoid future use of expensive services through prevention and health promotion activities. The ability to identify inappropriate or inefficient service use, however, is limited. Most diagnostic and therapeutic interventions have not undergone rigorous evaluations of long-term outcomes that would allow targeted elimination or expansion of use.

HEALTH CARE SPENDING AND COSTS

Data on overall health care spending provide some indication of the impact of the changes in the health care marketplace. Recent trends suggest a slowdown in national health care spending over the past few years (see Figure 1-3). After accounting for inflation, between 1990 and 1993 national expenditures grew at an average annual rate of 4.7 percent, compared with 5.7 percent between 1980 and 1990 and 5.4 percent between 1970 and 1980.

Marketplace changes may also help explain why private sector spending per person has, in recent years, grown more slowly than Medicare's spending per enrollee (see Figure 1-4). Medicare expenditures grew faster than private sector spending in the early 1980s. This pattern reversed in 1984—following PPS implementation—and continued through 1991. In 1992 and 1993, however, Medicare expenditures again were growing faster than those in the private sector.

Figure 1-3. Real Average Annual Change in National Health Expenditures, 1960-1993 (In Percent)

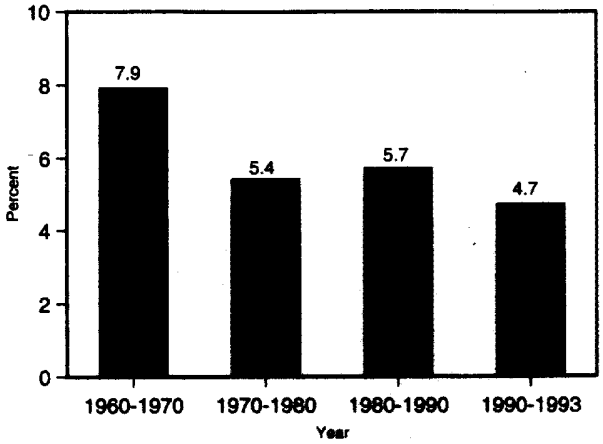

SOURCE: ProPAC analysis of national health expenditure data from the Health Care Financing Adminstration, Office of the Actuary.

Spending growth rates for the different health care sectors have varied substantially in recent years. For example, overall hospital spending experienced the third lowest real increase since the beginning of the Medicare program, decelerating from an annual growth rate of 5.2 percent in 1992 to 3.6 percent in 1993.[15] Real spending for home health care continued growing the fastest—20.2 percent in 1993—although even this was lower than the 23.6 percent in 1992. Spending for physician services grew 2.8 percent after adjusting for inflation, compared with 4.5 percent in 1992.

Figure 1-4. Real Average Annual Change in Medicare Expenditures Per Enrollee and Private Health Insurance Expenditures Per Person, 1979-1993 (In Percent)

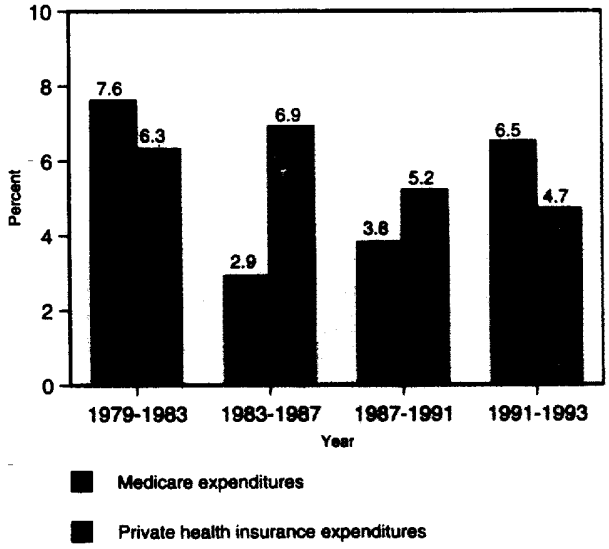

SOURCE: ProPAC analysis of data from the Health Care Financing Administration, Office of the Actuary.

Hospitals

Inpatient hospital care represents the largest share of health care spending. Payment policy changes and technological advances, however, have shifted many procedures to ambulatory settings, resulting in lower hospital occupancy rates and excess capacity. Insurers and managed care plans are taking advantage of these factors to pursue price discounts. Consequently, many hospitals are being pressured to lower their prices to more competitive levels, necessitating lower cost growth as well.

The dramatic decline in the growth of hospital costs over the past two years suggests that hospitals are adjusting to their changing financial environment (see Figure 1-5). From 1987 until 1992, hospital costs per case grew about 9 percent annually. In 1993, the rate dropped to 4.8 percent. This trend appears to have continued into 1994, with costs

Figure 1-5. Annual Change in Hospital Costs Per Adjusted Admission, 1987-1994 (In Percent)

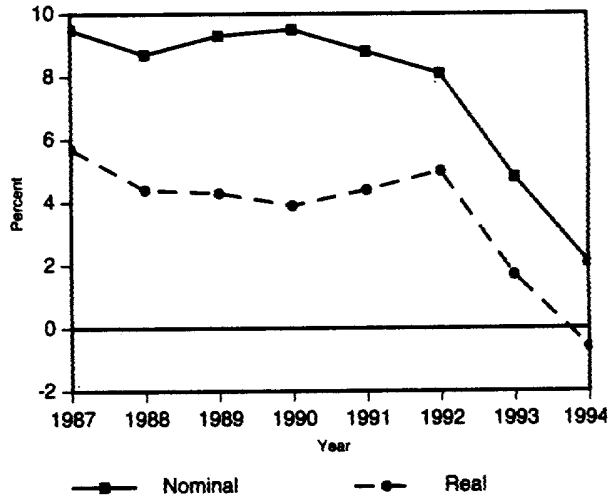

* Value for January - September 1994 compared with same months in 1993.

SOURCE: American Hospital Association National Hospital Panel Survey.

growing at a rate equivalent to 2.1 percent annually for the first nine months. The slowdown is even more striking when the effects of inflation are removed. Real cost growth fell from an annual rate of 5.0 percent in 1992 to 1.7 percent in 1993. In the first nine months of 1994, inflation-adjusted costs per case actually declined by 0.6 percent, compared with the same period in 1993.

Declines in average lengths of stay and slower employee wage growth appear to be key factors in the recent downward trend. After fluctuating slightly with no net change between 1985 and 1991, average length of stay fell 1.5 percent in 1992 (see Figure 1-6). This trend continued in 1993 and 1994, with additional stay reductions of slightly more than 3 percent in each year.

For many years, hospital wages grew faster than those for all civilian workers. This gap began to narrow in early 1993 (see Figure 1-7). By the end of that year, hospital wage increases fell below those in the rest of the economy. Since then, hospital wage growth has continued to slow. In the third quarter of 1994, average wages for hospital employees grew no faster than general inflation.

The recent downward trend in hospital cost growth is not unprecedented. Rates have slowed

Figure 1-6. Average Annual Change in Length of Stay: 1985-1991 and 1992-1994 (In Percent)

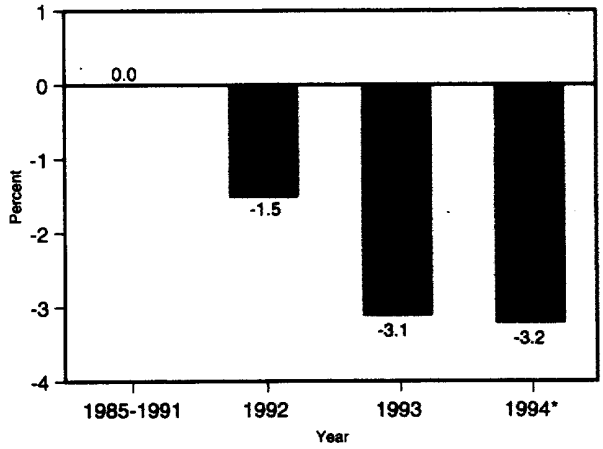

* Value for January - September 1994 compared with same months in 1993.

SOURCE: American Hospital Association National Hospital Panel Survey.

Figure 1-7. Change in Hospital Workers' and All Civilian Workers' Compensation, 1992-1994 (In Percent)

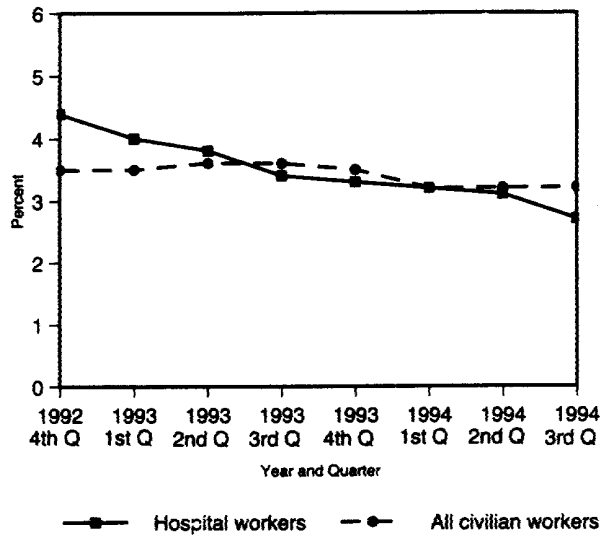

Note: Each period compared with the same period in the previous year.

SOURCE: Department of Labor, Bureau of Labor Statistics.

dramatically several other times during the past 25 years, each time in response to an explicit government policy or cost-containment initiative (see Figure 1-8). For example, the steep decline in 1973 coincided with the Nixon Administration's economic stabilization program. Decreases in the late 1970s and early 1980s corresponded with implementation of the Carter Administration's voluntary hospital cost controls and Medicare's prospective payment system for hospitals, respectively. In each of these periods, however, when the explicit pressure was withdrawn or lessened, the slowdown did not continue. Similarly, because comprehensive Federal health care reform seems unlikely in the immediate future, the pressure to slow cost growth could diminish. Nonetheless, many believe that today's trend differs from earlier ones because of changes in the private insurance market that appear to be accelerating, rather than subsiding. Moreover, because the impetus is based on the marketplace, there is a greater likelihood that the pressure will be sustained.

Other Facilities

While inpatient hospital care continues to represent the largest share of total health care spending,

20

Figure 1-8. Annual Change in Hospital Costs Per Case, 1967-1992 (In Percent)

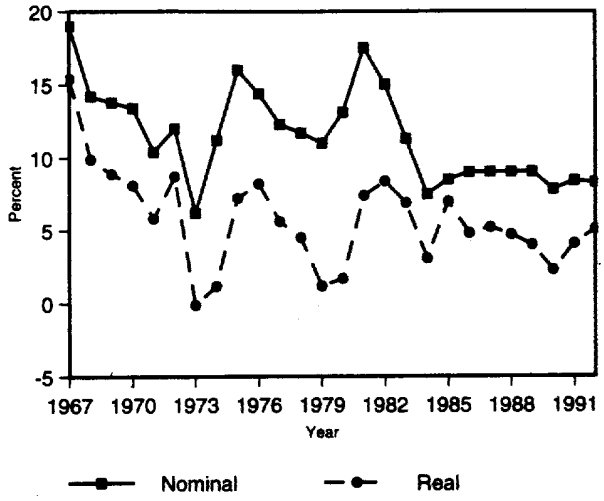

SOURCE: American Hospital Association Annual Survey of Hospitals.

Table 1-1. Medicare Home Health Care Utilization, 1980-1994

	Persons Served		Visits	
Year	Number (In Thousands)	Per 1,000 Enrollees	Number (In Thousands)	Per Person Served
1980	726	26	16,322	22.5
1981	948	34	22,688	23.9
1982	1,154	40	30,628	26.5
1983	1,318	45	36,898	28.0
1984	1,498	50	40,422	27.0
1985	1,549	51	39,449	25.5
1986	1,571	51	38,000	24.2
1987	1,544	49	35,591	23.1
1988	1,582	49	37,132	23.5
1989	1,685	51	46,199	27.4
1990	1,940	58	69,565	35.9
1991	2,223	65	100,044	45.0
1992	2,523	72	134,844	53.4
1993	2,900	81	173,953	60.0
1994*	3,220	88	209,149	65.0

* Estimated

SOURCE: Health Care Financing Administration, Office of the Actuary.

payment policies and technological advances have shifted the site of care for a growing number of services to ambulatory settings, driving up spending in this area. In 1984, for example, 15 percent of hospital care was provided on an outpatient basis. By 1993, this share had increased to 23 percent.[16] Hospital outpatient spending grew 290 percent between 1984 and 1993, while hospital inpatient expenditures went up 82 percent.[17]

Spending for post-acute services also has grown rapidly, as patients increasingly are transferred to skilled nursing facilities, rehabilitation and long-term hospitals, and the home to recuperate from inpatient services or to be treated for chronic conditions. The rising use of these settings may result from several factors, including private sector incentives to treat patients in less costly sites as well as changes in Medicare payment and coverage policies.

Volume continues to play a major role in the growth of spending by these other health care providers. This is best exhibited by examining Medicare spending for home health services (see Table 1-1). Increases in the number of people receiving home health care and the number of visits for each person are primarily responsible for the rising spending for this service. In 1980, for every 1,000 Medicare enrollees, 26 received home health services. This figure nearly tripled by 1993, while the number of visits received by each person nearly doubled. Much of this growth was associated with changes in coverage policies. Increases in the numbers of users and services provided per user also have driven much of Medicare's higher spending for skilled nursing facility care (see Table 1-2). Dialysis for end-stage renal disease and certain outpatient procedures demonstrate a similar—though less pronounced—pattern.

MEDICARE IN THE CHANGING MARKETPLACE

The changes in the health care marketplace will undoubtedly affect the Medicare program. Medicare is a major player in the health care arena, responsible in 1994 for the health care services of some 36 million people at an annual cost of about $150 billion.[18] Although the program's payment policies are distinct from those of private payers, the cost of providing care to Medicare beneficiaries—particularly for hospital services—has been linked to private sector payments through cost shifting. Financial constraints in the private sector may affect this relationship. In addition, there is an increasing divergence between Medicare's payment

Table 1-2. Medicare Skilled Nursing Facility Utilization, 1980-1994

	Persons Served		Days	
Year	Number (In Thousands)	Per 1,000 Enrollees	Number (In Thousands)	Per Person Served
1980	257	9	8,645	33.6
1981	251	9	8,518	33.9
1982	252	9	8,814	35.0
1983	265	9	9,314	35.1
1984	299	10	9,640	32.2
1985	314	10	8,927	28.4
1986	304	10	8,160	26.8
1987	293	9	7,445	25.4
1988	384	12	10,667	27.8
1989	636	19	27,780	43.7
1990	638	19	25,200	39.5
1991	671	20	23,700	35.3
1992	785	22	28,960	36.9
1993	870	24	34,437	39.6
1994*	925	25	36,865	39.9

* Estimated.

SOURCE: Health Care Financing Administration, Office of the Actuary.

structure and those of a growing number of private payers. While Medicare offers its enrollees a managed care option, its primary payment method continues to be fee for service. The style of care provided to Medicare beneficiaries may change as providers alter their practice patterns to meet the incentives of a health care environment dominated by managed care.

Medicare Spending

The Medicare program is experiencing shifts in spending across provider types similar to those seen in the overall health care system. Although hospital inpatient payments continue to be Medicare's largest outlay, skilled nursing care and home health services account for disproportionate shares of overall Medicare spending growth (see Figures 1-9 and 1-10). In 1991, expenditures for skilled nursing care and home health services constituted 2 percent and 5 percent of total Medicare spending, respectively, yet they represented 11 percent and 17 percent of the increase in total Medicare expenditures between 1991 and 1993.

This significant shift in Medicare spending shares results from sustained spending increases for post-acute services. Between 1991 and 1993, real expenditures per enrollee for skilled nursing care rose almost 40 percent per year; those for home health care services grew just over 30 percent annually (see Figure 1-11). These growth rates reflect a combination of technological advances, modifications

Figure 1-9. Share of Total Medicare Spending, by Sector, 1991 (In Percent)

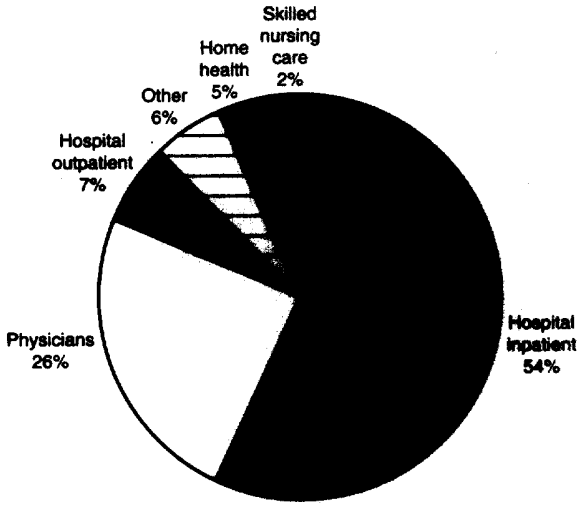

SOURCE: Health Care Financing Administration, Office of National Health Statistics.

Figure 1-10. Contributors to Increase in Medicare Spending, by Sector, 1991-1993 (In Percent)

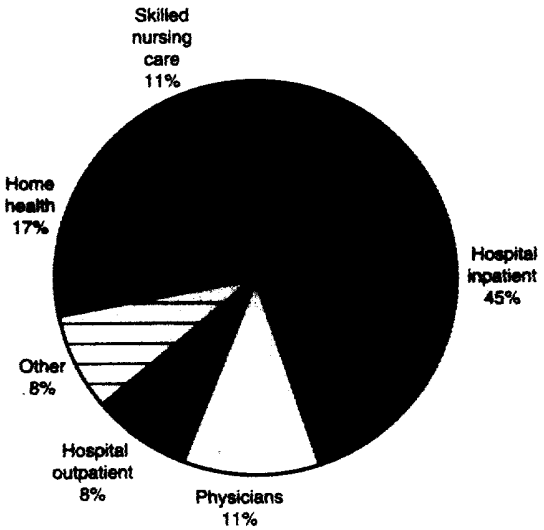

Note: Increase in total Medicare expenditures = 25.4 percent.
SOURCE: Health Care Financing Administration, Office of National Health Statistics.

22

Figure 1-11. Real Average Annual Growth Rates Per Enrollee for Selected Medicare Services, 1987-1993 (In Percent)

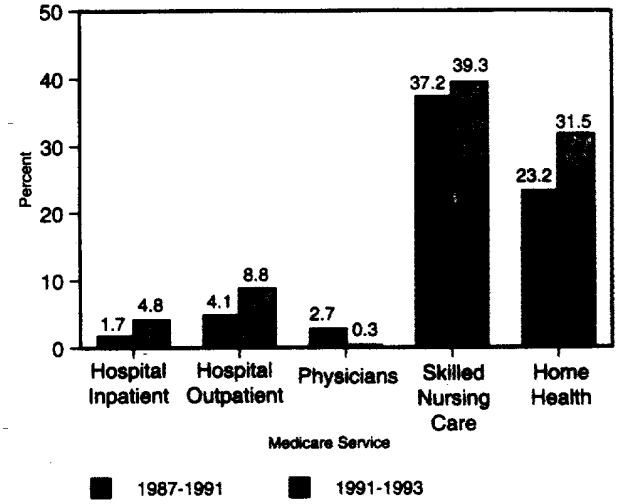

SOURCE: ProPAC analysis of data from the Health Care Financing Administration, Office of the Actuary.

in physicians' practice patterns, and changes in Medicare's coverage policies. Further, even though Medicare's cost-based payment methodologies incorporate payment limits, they do not provide strong enough incentives to control costs.

Medicare's hospital payment policies are having an increasing impact on the financial condition of hospitals. Medicare represents a rising share of hospitals' total patient care. The number of Medicare enrollees is growing faster than the general population, and Medicare admissions per enrollee have not been decreasing as have those for the under-65 population. In 1980, Medicare revenues represented about 40 percent of hospitals' patient care costs; in 1992, this proportion rose to 43 percent.[19]

Future Medicare Hospital Payments and Costs

The slowdown in hospital cost growth, along with continued Federal budgetary pressures, has focused attention on further reducing the growth in Medicare payments for hospitals and other providers. As discussed earlier, for a number of years hospitals have offset increases in Medicare costs per case that exceeded Medicare payments by obtaining extra revenues from private insurers. In 1992, for example, Medicare payments were $11 billion less than the costs of treating program beneficiaries.[20] All of this deficit was offset by higher payments from private payers. Whether additional Medicare payment constraints can be imposed without exacerbating the pressure to cost shift depends on the rate of increase in both payments and costs.

PPS updates through fiscal year 1997 were set by the Omnibus Budget Reconciliation Act of 1993.[21] The actual payment increases received by hospitals, however, depend not only on these updates, but also on the growth in the Medicare case-mix index. ProPAC has estimated this increase to be 1.0 percent in fiscal year 1994 and 1.1 percent in fiscal year 1995. The Commission believes a level of 1.0 percent likely will be maintained through 1997 in the absence of major changes in the payment system.

Because it is impossible to predict whether the current cost slowdown will continue, ProPAC projected cost growth under three scenarios that it believes represent the range of likely increases in Medicare cost per case (see Table 1-3). A reasonable estimate of the upper end of the range after 1994 is 4.9 percent annually (equal to the projected increase in the PPS hospital market basket index plus 1.8 percentage points)—the level experienced in fiscal year 1992. This upper limit reflects the assumption that the combination of cost-containment pressure from the private sector and public concern about rising costs will prevent cost growth from escalating to the 8 percent to 9 percent level of the late 1980s.

The lower boundary on the future rate of cost increase is best represented by the cost growth through the first nine months of 1994, which was 2.1 percent.[22] In ProPAC's view, the hospital industry's response to these pressures is not likely to be any more intense in the future than it is today. Further, the current growth rate is actually less than inflation in the general economy. The intermediate range cost growth estimate for 1995 and beyond is based on the forecasted market basket increase plus an allowance for changes in the mix and complexity of hospital admissions. The Commission's best estimates of these variables through 1997 are 1.0 percent per year for real case-mix growth and 2.9 percent per year for the market basket increase.[23]

Table 1-3. Medicare PPS Per Case Payments Relative to Costs, Under Three Cost Growth Scenarios, Fiscal Years 1994-1997 (In Percent)

Variable	1994	1995	1996	1997	Average 1994-1997
Payment increase[a]	3.0%	3.1%	2.6%	4.2%	3.2%
Range of likely cost increase:					
High[b]	2.1	4.9	4.9	4.9	4.2
Intermediate[c]	2.1	3.8	4.0	4.1	3.5
Low[d]	2.1	2.1	2.1	2.1	2.1
Difference between payment and three alternative cost increases:					
High	-0.9	1.8	2.3	0.7	1.0
Intermediate	-0.9	0.7	1.4	-0.1	0.3
Low	-0.9	-1.0	-0.5	-2.1	-1.1

[a] Derived from the legislated update (which is the forecasted market basket increase less a prescribed number of percentage points) and ProPAC's estimate of case-mix index change.

[b] For 1994, based on the American Hospital Association National Hospital Panel Survey increase for the first nine months of 1994. For 1995 through 1997, assumes return to the per case increase in Medicare inpatient hospital costs experienced in fiscal year 1992.

[c] After 1994, based on the market basket increase (as forecasted by the Health Care Financing Administration in September 1994), plus increments for expected market basket forecast error correction and real case-mix growth (both as estimated by ProPAC).

[d] Assumes continuation of the 1994 experience.

SOURCE: ProPAC analysis.

The additional pressure to cost shift can be estimated by subtracting the Medicare payment increase from the cost increase each year. Medicare and the private sector account for approximately equal shares of hospital spending, 40 percent and 39 percent in 1992. Consequently, every percentage point of Medicare cost increase not reimbursed by the Medicare payment increase will, all else equal, translate into a percentage point of additional revenue needed from the private sector.

The unusually low 2.1 percent per case cost growth in fiscal year 1994 means that, for the first time since 1985, Medicare's payment increase will probably exceed the growth in costs. Further, if hospitals maintain cost growth at the current level for three more years, this situation would continue. Even under those circumstances, however, the difference between payment and cost increases is estimated at only 1.1 percentage points per year, so at best there could be only a modest reduction in the level of cost shifting from Medicare to the private sector. Moreover, pressures from rising uncompensated care losses, lagging Medicaid payment increases, and private sector payment constraint might prevent even this modest change from materializing. It should also be pointed out that even though the amount of cost shifting might be reduced slightly each year under this scenario, the amount hospitals spend to treat Medicare beneficiaries would still substantially exceed payments.[24]

If, alternatively, hospital cost growth follows the Commission's intermediate estimate, Medicare costs would continue to grow faster than payments. The uncovered cost increase would average about 0.3 percentage points annually from 1994 to 1997. This means that, to the extent private insurers would allow it, there would be additional cost shifting from Medicare to the private sector each year, and further reductions in the updates or other forms of scaling back payments would only exacerbate the problem. At the high end of the growth range for hospital costs, the legislated Medicare updates would increase the pressure to cost shift by 1.0 percentage point per year.[25]

The ability to use cost shifting to fill the revenue gap when Medicare cost increases exceed payment increases varies across hospitals. Facilities that treat larger shares of Medicare, Medicaid, and uninsured patients have a lesser ability to cost shift to the private sector. In view of growing price competition in the marketplace, these facilities will face

a greater risk of declining margins, which eventually could threaten their financial viability and their ability to care for Medicare beneficiaries.

Medicare and Managed Care

The growth of managed care in the private sector may have implications for the Medicare program and its beneficiaries. Currently, the primary methods used by Medicare for financing and delivering care have different incentives than those inherent in managed care. Most Medicare beneficiaries have a large choice of health care providers, which are paid on a fee-for-service basis. By contrast, managed care is premised on a limited number of providers that share financial risk for patients' overall use of health care services. The private sector's increasing focus on managing patients' overall health service use, rather than on distinct service units, likely will influence providers' overall practice patterns. This, in turn, will affect the care provided to all patients, including Medicare beneficiaries.

Medicare beneficiaries have the option to receive their health care through HMOs, but enrollment growth lags behind that seen in the private sector. Medicare has offered at least one managed care option since its inception. Initially, however, plans were paid on the basis of their costs. In 1982, Medicare introduced the risk contracting program, which most resembles private sector managed care. Under this program—the largest of Medicare's managed care initiatives—Medicare pays HMOs a capitated rate that is based on estimated Medicare fee-for-service spending.

Beneficiary enrollment in risk contracting plans has risen slightly since the late 1980s, from 3 percent of the total Medicare population in 1988 to almost 5 percent in 1994 (see Figure 1-12). This is a much smaller proportion, however, than the 19 percent enrollment in similar arrangements in the privately insured population. Geographically, enrollment in risk contracting plans parallels that in the private sector. States with large private sector HMO enrollments also have high Medicare HMO penetration.

Figure 1-12. Medicare Beneficiaries Enrolled in Managed Care Risk Contracting Programs, 1988-1994 (In Percent)

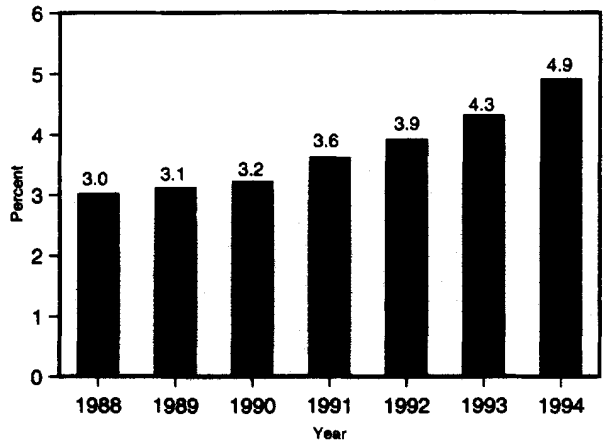

SOURCE: Health Care Financing Administration, Office of Managed Care.

CONCLUSIONS

Increased price competition is causing fundamental changes in the financing and delivery of care. Insurers are negotiating larger discounts from providers and increasingly managing where their subscribers obtain services. The growth in managed care arrangements reflects a heightened interest in controlling overall expenditures. Providers are responding to these competitive pressures by reconfiguring their relationships with each other as well as with payers to try to boost their market share. Whether these changes will influence quality of care will depend on the extent of cost-containment efforts, the services that are affected, and the need for and effectiveness of those services.

The financial pressures in the health care marketplace already seem to be working. Health care spending shows signs of moderating. Further, after accounting for inflation, hospital per case costs actually declined in 1994. The distribution of expenditures across health care sectors also is shifting. The hospital inpatient setting accounts for a smaller share of total health spending, with utilization moving to less intensive sites such as ambulatory settings and post-acute care facilities. Even though services may be less expensive in these alternative sites, higher utilization is driving up spending.

Medicare has managed to control its hospital expenditures by limiting its payment updates through PPS. By relying on greater revenues from

private payers, hospitals have, in aggregate, managed to offset increases in Medicare costs per case that exceeded payment increases. Two trends—greater price consciousness and slower hospital cost growth—will affect hospitals' ability and need to cost shift. If cost growth remains at the low levels of 1994, there could be modest reductions in the need for cost shifting. On the other hand, if costs grow at an intermediate level—between current and historical rates—cost-shifting pressures may continue to increase. There are concerns, however, that private payers will not continue to support even existing levels of subsidies. Particularly as payers receive larger discounts from providers and facilities compete to enlarge their market share, certain hospitals, such as those serving large numbers of Medicare, Medicaid, and uninsured patients, will be less able to rely on cost shifting to maintain their financial position.

Profound changes are taking place in the health care marketplace. It is too early to assess the impact of these changes, but there is one certainty. Restructuring the relationships among payers and providers will have a lasting influence on the way health care is delivered and financed in this country.

Notes to Chapter 1

1. Data provided by the Health Care Financing Administration, Office of the Actuary.

2. Ibid.

3. Data provided by the Group Health Association of America and the Department of Labor, Bureau of Labor Statistics.

4. "Employee Benefits in Medium and Large Private Establishments, 1991." Bulletin 2422, Department of Labor, Bureau of Labor Statistics, May 1993; and Department of Labor News Release, USDL: 94-477, September 30, 1994.

5. "Employee Benefits in Small Private Establishments, 1992." Bulletin 2441, Department of Labor, Bureau of Labor Statistics, May 1994; and "Employee Benefits in Small Private Establishments, 1990." Bulletin 2388, Department of Labor, Bureau of Labor Statistics, September 1991.

6. Department of Labor News Release, USDL: 94-477, September 30, 1994.

7. Under case management, a fee-for-service payment system is retained, but patients must obtain prior approval for specialized services from a primary care physician, who receives an additional fee to monitor an individual's service use.

8. Data provided by the Health Care Financing Administration, Office of Managed Care.

9. Bureau of the Census, "Statistical Brief: Health Insurance Coverage—1993," October 1994.

10. Chris Haffner-Eaton, "Physician Utilization Disparities Between the Uninsured and the Insured: Comparisons of the Chronically Ill, Acutely Ill, and Well Nonelderly Populations," *Journal of the American Medical Association* 269(6):787-92, February 10, 1993; Beth Hahn and Doris Lefkowitz, *Annual Expenses and Sources of Payment for Health Care Services,* National Medical Expenditure Survey Research Findings 14, AHCPR Pub. No. 93-0007 (Rockville, MD: U.S. Public Health Service, November 1992).

11. Jack Hadley, Earl P. Steinberg, and Judith Feder, "Comparison of Uninsured and Privately Insured Hospital Patients,"*Journal of the American Medical Association* 265(3):374-79, January 16, 1991; Joel S. Weissman and others, "Rates of Avoidable Hospitalization by Insurance Status in Massachusetts and Maryland," *Journal of the American Medical Association* 268 (17):2388-94, November 4, 1992; John Z. Ayanian and others, "The Relation Between Health Insurance Coverage and Clinical Outcomes Among Women with Breast Cancer," *New England Journal of Medicine* 329(5):326-31, July 29, 1993.

12. Albert L. Siu and others, "Use of the Hospital in a Randomized Trial of Prepaid Care," *Journal of the American Medical Association* 259(9):1343-46, March 4, 1988; Jane McCusker, Anne M. Stoddard, and Andrew A. Sorensen, "Do HMOs Reduce Hospitalization of Terminal Cancer Patients?" *Inquiry* 25(2):263-70, Summer 1988; Sheldon Greenfield and others, "Variations in Resource Utilization Among Medical Specialties and Systems of Care," *Journal of the American Medical Association* 267(12):1624-30, March 25, 1992; and Robert H. Miller and Harold S. Luft, "Managed Care Plan Performance Since 1980: A Literature Analysis," *Journal of the American Medical Association* 271(19):1512-19, May 18, 1994.

13. Mark C. Hornbrook and Sylvester E. Berki, "Practice Mode and Payment Method: Effects on Use, Costs, Quality, and Access" *Medical Care* 23(5):485-511, May 1985; Alan N. Johnson and others, "Differences in Inpatient Resource Use by Type of Health Plan," *Inquiry* 26(3):388-98, Fall 1989; Robert H. Brook and others, "Quality of Ambulatory Care: Epidemiology and Comparison by Insurance Status and Income," *Medical Care* 28(5):392-433, May 1990; and James P. Murray and others, "Ambulatory Testing for Capitation and Fee-for-Service Patients in the Same Practice Setting: Relationship to Outcomes," *Medical Care* 30(3):252-61, March 1992.

14. Sherman Folland and Miron Stano, "Small Area Variations: A Critical Review of Propositions, Methods, and Evidence," *Medical Care Review* 47(4):419-65, Winter 1990; Jose J. Escarce and others, "Racial Differences in the Elderly's Use of Medical Procedures and Diagnostic Tests," *American Journal of Public Health* 83(7):948-54, July 1993.

15. ProPAC analysis of data from the Health Care Financing Administration, Office of the Actuary. The two lower real increases were in 1984 and 1985, the first two years of PPS.

16. Data provided by the Health Care Financing Administration, Office of the Actuary.

17. ProPAC analysis of data from the Health Care Financing Administration, Office of the Actuary.

18. Data provided by the Health Care Financing Administration, Office of the Actuary.

19. Ibid.

20. ProPAC analysis of data provided by the American Hospital Association.

21. The updates are 2.0 percent in both fiscal years 1994 and 1995 and, based on current forecasts, estimated at 1.6 percent in 1996 and 3.2 percent in 1997.

22. Data from the American Hospital Association National Hospital Panel Survey covering January through September 1994.

23. The latest forecast of the increase in the PPS market basket index averages 3.5 percent from 1995 through 1997. However, in recent years the forecasts have turned out to be higher than the actual increase. Even though HCFA's forecasts have recently been revised downward, ProPAC believes they may still prove to be too high and thus lowered them by 0.6 percentage points each year for purposes of estimating future cost per case growth. The unadjusted forecast was used in estimating payment updates, however, in accordance with current law.

24. In 1992, $10.8 billion of Medicare losses were cost shifted to the private sector. Under the low cost growth scenario, this amount would have been reduced by only $0.7 billion, or 6.5 percent of the total.

25. If HMO penetration in the private sector increases dramatically over the next three years, hospital inpatient service use might decline because patients with less complex conditions would most likely be treated on an outpatient basis. While this would create savings in the private sector, it also would elevate costs per case because hospitals' fixed expenses (for example, equipment and management salaries) would have to be spread over fewer cases. Additionally, the remaining patient mix would be sicker and therefore costlier. This situation would increase the probability of the highest of the three per case cost growth scenarios occurring.

Chapter 2

Recommendations

When the Prospective Payment Assessment Commission (ProPAC) was created by the Congress in 1983, its primary responsibility was to examine issues and make recommendations for updating and improving the Medicare prospective payment system (PPS). The Congress gradually has expanded ProPAC's mandate to include analyzing current payment policies for all facility services furnished to Medicare beneficiaries and developing policies for the future.

These broader duties include examining payment for hospital outpatient services, services furnished by skilled nursing facilities and home health agencies, and end-stage renal disease dialysis facilities. In addition, at the request of the Congress, the Commission has studied issues related to the adequacy of Medicaid hospital payment rates and the use of Medicare payment methods for other payers. ProPAC continues to devote substantial effort, however, to updating and improving payment for PPS hospitals and excluded facilities and distinct-part units.

Although this report is submitted to the Congress, the Secretary of Health and Human Services (HHS) is required to consider ProPAC's recommendations and respond to them in the annual notice of PPS rulemaking published in the *Federal Register*. The Commission is always pleased to work with the Secretary to provide additional analysis and information on its recommendations.

ProPAC's recommendations reflect the collective judgment of its 17 Commissioners. Some recommendations, such as the annual update factors, are reviewed every year. Others address new issues or modify previous recommendations. All incorporate recent research findings.

RECOMMENDATIONS FOR FISCAL YEAR 1996

The Commission's recommendations center on three areas:

- Updating payment rates,
- Improving PPS payment policies, and
- Strengthening hospital outpatient payment policies.

ProPAC's recommendations are intended to make Medicare's payments for health care services more equitable and effective. The recommendations on the updates reflect the Commission's views on aggregate spending levels. Refinements to the payment system and the distribution of Medicare PPS payments are the general focus of the next set of recommendations. Finally, the recommendations on outpatient payment policies address concerns about program and beneficiary payments for the rapidly growing volume of services provided in hospital outpatient departments.

Updating Payment Rates

The Commission is mandated by law to report to the Congress each year on the appropriate update to inpatient hospital payment rates under Medicare's PPS. As required, ProPAC considers several factors in developing its annual update recommendation: the hospital market basket index (which reflects the prices of resources hospitals use to provide inpatient care), scientific and technological advances (S&TA), hospital productivity, and the quality and long-term cost-effectiveness of health care. The Secretary of Health and Human Services is required to consider the Commission's recommendation in developing her update proposal. The actual update historically has been legislated by the Congress in the budget reconciliation process, often for several years in advance.

In the Omnibus Budget Reconciliation Act (OBRA) of 1993, the update to PPS operating payments was established for each fiscal year through 1997. For fiscal year 1996, the operating update for all PPS hospitals is set equal to the change in the hospital market basket index minus

32

2.0 percentage points. Even though the fiscal year 1996 operating update has been set by law, the Commission has continued its traditional approach of examining the individual factors that together determine the appropriate update to the PPS payment rates. ProPAC believes this approach results in a payment increase that is sufficient, in the context of the current health care financing system, to maintain Medicare beneficiaries' access to quality care while encouraging hospital efficiency in providing that care. (See Appendix A for an historical overview of the PPS update and its components.)

In addition to the operating update, the Commission recommends an update for the Federal capital payment rate. ProPAC also recommends an update for the hospital-specific rates that apply to sole community hospitals. The update for facilities excluded from PPS is also considered. Finally, ProPAC's recommendation for an update to the composite payment rate for dialysis services is presented.

Recommendation 1: Update Factor for Operating Payments to PPS Hospitals

For fiscal year 1996, the PPS standardized payment amounts should be updated to account for the following:

- **The projected increase in the HCFA PPS market basket index, currently estimated at 3.9 percent;**
- **An adjustment of zero percentage points to reflect the difference between the ProPAC and HCFA market baskets;**
- **A negative adjustment of 1.8 percentage points to correct for substantial error in the fiscal year 1994 market basket forecast;**
- **A positive adjustment of 0.3 percentage points to reflect the cost-increasing effects of scientific and technological advances;**
- **A negative adjustment of 0.3 percentage points to encourage hospital productivity improvements; and**
- **A net adjustment of zero percentage points for case-mix change in fiscal year 1995.**

This would result in an update factor of 2.1 percent.

This recommendation reflects the Commission's judgment about the appropriate increase in the level of PPS payment rates. It is equal to the forecasted change in the market basket index minus 1.8 percentage points, 0.2 percentage points higher than mandated in current law. Since it is based on the most recent projections of the fiscal year 1996 increase in the market basket index, the effective value of ProPAC's update factor recommendation may be modified as more timely forecasts become available. The components of ProPAC's update factor recommendation are summarized in Table 2-1, and a discussion of each follows.

It should be noted that the growth in average per case payments in each year is higher than the PPS update. This is primarily because increases in the Medicare case-mix index (CMI) result in proportional increases in hospital payments. Future changes in the CMI are difficult to predict; however, on the basis of currently available data, ProPAC estimates that the CMI will rise by 1.0 percent in fiscal year 1996. Based on the Commission's recommendation of a 2.1 percent update, the average increase in per case payments would be about 3.1 percent.

PPS Market Basket Forecast and Forecast Error Correction—The forecasted increase in the market basket index is the expected change in the prices of the resources used during a typical hospital stay. This forecast is the reference point used in updating the PPS payment rates. The current forecast is for a 3.9 percent increase in the Health Care Financing Administration's (HCFA) PPS market basket index during fiscal year 1996.

In its March 1990 *Report and Recommendations to the Secretary, U.S. Department of Health and Human Services*, ProPAC proposed modifications to HCFA's market basket. Although the agency adopted most of these modifications, it did not incorporate the key provision, which would have increased the weight of internal hospital wages in the computation of the market basket index. The

Table 2-1. Recommended Update Factor for PPS Hospital Operating Payments, Fiscal Year 1996

Components of the Update		
Fiscal year 1996 HCFA PPS market basket forecast*		3.9%
Adjustment for difference between HCFA and ProPAC market baskets*		0.0
Correction for fiscal year 1994 forecast error		-1.8
Allowance for scientific and technological advances		0.3
Adjustment for productivity		-0.3
Adjustments for case-mix change (fiscal year 1995)		
Total DRG case-mix index change	-1.0	
Real across-DRG case-mix change	0.8	
Within-DRG case-complexity change	0.2	
Net adjustment for case-mix change		0.0
Total PPS operating update		2.1

* Market basket forecast provided by the Health Care Financing Administration, Office of the Actuary, December 1994. The market basket forecast is subject to change as more current data become available.

market basket as currently constructed does not adequately recognize the unique characteristics of the hospital labor market. ProPAC encourages the Secretary to consider adopting the Commission's formulation of the market basket when the index is rebased later this year.

Since the PPS update for fiscal year 1996 is legislated relative to HCFA's market basket, that market basket is used as the basis for ProPAC's update framework. The Commission takes this into account by making an adjustment to allow for the estimated effect of the modifications it has proposed. However, the current fiscal year 1996 forecast is that the increase in ProPAC's and HCFA's market baskets will be the same. The corresponding adjustment, therefore, is zero percentage points.

A correction for substantial error in market basket forecasts is an important part of the Commission's update framework. This correction protects both hospitals and the Federal government by adjusting the base payment rates so that the effects of past forecast errors (both positive and negative) are removed.

A forecasted market basket increase of 4.3 percent was used to set payments in fiscal year 1994. The actual market basket increase, however, was only 2.5 percent. The update for fiscal year 1994 thus was set 1.8 percentage points higher than if the actual market basket increase had been known at the time. Therefore, ProPAC's update recommendation also includes a –1.8 percentage point adjustment for fiscal year 1994 market basket forecast error. (See Appendix A for more information on the components of the market basket forecast error.)

Scientific and Technological Advances—The allowance for scientific and technological advances is a future-oriented policy target. It provides additional funds for hospitals to adopt quality-enhancing, cost-increasing health care advances. This year, ProPAC is using a qualitative approach to develop its estimate for the fiscal year 1996 adjustment by examining technologies considered in last year's estimate and reviewing the literature for potential new advances. (See Appendix A for more information on the methodology and the technologies contributing to the estimate.) In the Commission's view, 0.3 percent is an appropriate level for the operating S&TA allowance for fiscal year 1996. This is the same estimate used in setting the fiscal year 1995 allowance. There is no compelling reason to believe the rate of increase in these costs has either risen or fallen substantially from last year's estimate.

Productivity Improvement—The productivity adjustment is also a future-oriented policy target. The Commission thinks it is reasonable to expect

34

hospitals to achieve productivity improvements during fiscal year 1996 that are comparable to those expected in other sectors of the service economy. The recommended adjustment of −0.3 percentage points is based on ProPAC's determination that hospital productivity should increase by 0.6 percent and that the savings from such productivity improvement should be shared equally by hospitals and the Medicare program. Furthermore, the Commission expects hospitals to be able to finance scientific and technological advances through such gains in fiscal year 1996. This provides an incentive for hospitals to strive for productivity gains as they adopt new technologies. (See Appendix A for more information on trends in hospital productivity.)

Case-Mix Change—The Commission's fiscal year 1996 PPS update recommendation also accounts for the net effect of case-mix change during fiscal year 1995. The adjustment in this year's update is zero percentage points and reflects the following:

- A 1.0 percentage point reduction for the estimated change in the CMI,
- A positive allowance of 0.8 percentage points for real case-mix change across diagnosis-related groups (DRG), and
- A positive allowance of 0.2 percentage points for within-DRG case-complexity change.

Adjusting for these factors allows payments to increase due to real changes in the resources required to treat an average Medicare patient. Medical record documentation and coding practice improvements do not reflect increased patient resource requirements, so their impact on the CMI is also removed. (See Appendix A for more detailed discussion on case-mix change.)

Recommendation 2: Update Factor for Capital Payments to PPS Hospitals

For fiscal year 1996, the Commission recommends using a formula-based approach to update capital payment rates that includes the following:

- **The projected increase in a market basket index that measures the purchase price of capital used by hospitals, currently estimated at 4.1 percent;**
- **An adjustment to correct for substantial error in the capital market basket forecast (not applicable in fiscal year 1996);**
- **An adjustment of zero percentage points to reflect changes in financing costs;**
- **A net adjustment of zero percentage points for scientific and technological advances and productivity; and**
- **A net adjustment of zero percentage points for case-mix change in fiscal year 1995.**

This would result in an update factor of 4.1 percent.

The capital update formula is designed to maintain adequate hospital capital stock to provide efficient and effective care to Medicare beneficiaries. In the Commission's opinion, the capital update should reflect future replacement prices. The components of the update recommendation, summarized in Table 2-2, are discussed below. (See Appendix A for more information on the capital update.)

Capital Market Basket—ProPAC determines the capital update recommendation in light of projected increases in a market basket index that measures changes in the prices of capital assets that hospitals purchase. Developed by the Commission, the index measures annual change in the price of a fixed mix of capital goods. It is analogous to the one used to update PPS operating payments. (See Recommendation 1.)

The capital market basket includes three price components: buildings and fixed equipment, movable equipment, and other capital-related costs like insurance. The market basket weights indicate the relative importance of these three components. These weights are based on the shares of capital costs accounted for by buildings and fixed equipment and by movable equipment depreciation, as well as by annual outlays for other capital-related costs. In the absence of accurate and current infor-

Table 2-2. Recommended Update Factor for PPS Hospital Capital Payments, Fiscal Year 1996

Components of the Update	
Fiscal year 1996 capital market basket forecast[a]	4.1%
Correction for fiscal year 1994 forecast error	b
Financing policy adjustment	0.0
Allowance for scientific and technological advances	c
Adjustment for productivity	c
Net adjustment for case-mix change[d]	0.0
Total capital update	4.1

[a] Market basket developed by ProPAC; forecast supplied by the Health Care Financing Administration, Office of the Actuary, December 1994. The market basket forecast is subject to change as more current data become available.

[b] Not applicable.

[c] Adjustments for scientific and technological advances and productivity offset each other. No specific values were recommended.

[d] Case-mix change adjustments are identical to those used in the PPS hospital operating update.

mation on the mix of appropriate future capital purchases, these historical shares are the best available measures for this purpose.

The market basket gives a single-year projection of price change. ProPAC studied a range of alternative capital price measures to use in its market basket. In its March 1993 *Report and Recommendations to the Congress*, the Commission proposed using two price proxies especially relevant to hospital industry capital purchases: for hospital buildings and fixed equipment capital costs, the Boeckh building cost index subindex for apartments and office buildings (institutional construction); and for movable equipment capital costs, the Marshall and Swift hospital equipment index. For other capital-related costs, the market basket uses the consumer price index for residential rent.

Although updates should apply to the full Medicare capital payment rate, which is based on historical levels of depreciation and interest, changes in interest rates should be handled separately from the market basket. The Commission's financing policy adjustment addresses the issue of interest rate change in the update framework.

The capital market basket proposed by the Secretary uses a complex structure of weighted average changes in economywide price proxies and measures of interest expense. Its value is largely determined by the historical values of its components. As a result, this market basket can produce low updates even when current capital prices are increasing significantly. In the Commission's view, a straightforward market basket based on the projected changes in the price of appropriate hospital capital purchases and in other capital-related costs in the coming fiscal year is preferable. ProPAC's market basket would provide Medicare capital payments consistent with anticipated capital purchase prices.

As of January 1995, the projected increase in ProPAC's market basket index for fiscal year 1996 is 4.1 percent. This forecast may change as more recent data become available and as methodologies for estimating the market basket's components are refined.

Forecast Error Correction—The Commission believes past market basket index forecast errors should be corrected within the update framework. This correction protects both hospitals and the Federal government by adjusting the payment rates so that the effects of past forecast errors are not perpetuated. Because fiscal year 1996 is the first year in which a capital update framework will be used, there is no correction to make this year.

Financing Policy Adjustment—The Commission's update framework includes a financing policy adjustment to account for substantial changes in long-term interest rates. This adjustment would be used when current interest rates differ markedly from the recent past and the difference is expected to persist or grow. Short-term fluctuations in interest rates should not affect the market basket. Inclusion of interest in the market basket could lead to volatility in updates, overcompensation of hospitals in some circumstances, and undue risk for facilities at other times.

Changes in interest rates can create significant financial burdens or substantial financial windfalls for hospitals. Extended periods of unusually high rates could force hospitals to choose between postponing needed renovation projects or incurring indebtedness beyond what Medicare payments would support. The financing policy adjustment would increase the capital update in such circumstances to ensure that facilities could maintain

capacity adequate for cost-effective care for Medicare beneficiaries. It could raise payment updates at times of prolonged high interest rates, when some hospitals might face disruptive financial impacts. When interest rates decline, the adjustment could lower payment updates to allow the Medicare program to share in some of the hospital cost savings.

Although both short-term and long-term interest rates increased markedly in the past year, the Commission anticipates that these changes will have little impact on hospitals' long-term capital financing costs. Therefore, it is not appropriate to adjust capital payments for forecasted changes in interest rates at this time.

Scientific and Technological Advances—ProPAC recognizes that future hospital capital investments may include more costly, quality-enhancing medical technology. The capital update framework adjusts payments to allow for scientific and technological advances. (See Appendix A for more information on this adjustment.) The Commission believes that, in the coming year, hospitals should offset annual capital costs of new technologies by using newly purchased and existing capital more efficiently. Therefore, it does not specify any adjustment for the capital component of scientific and technological advances.

Productivity Improvement—Through its productivity adjustment, ProPAC recognizes that hospitals need to maintain their technological position as well as to adapt their capital stock to a health care environment in which there is less demand for inpatient services. This adjustment is a policy target for improving productivity by using existing plant and equipment more efficiently and by buying cost-decreasing technologies. In the coming year, savings from these sources should be used to offset the costs of scientific and technological advances.

Case-Mix Change—Medicare uses the same DRG definitions and relative weights for operating and capital payments. As a result, capital payments respond to changes in the case-mix index in the same way as do PPS operating payments. Thus, the zero percentage point adjustment to operating payment rates for CMI change is applied to capital payment rates as well. (See Recommendation 1.)

Recommendation 3: Single Operating and Capital Update Factor

The Commission recommends that when the transition to fully prospective capital payments is complete, a single update factor should be used for adjusting PPS operating and capital payment rates. Based on ProPAC's recommended updates to the operating and capital payment rates, the total increase to a fully prospective combined payment rate would be 2.3 percent for fiscal year 1996.

The Commission believes there ultimately should be one payment for hospital inpatient operating and capital expenses, with a single annual update to that payment. Despite separate payment methods, hospitals do not distinguish between their operating and capital payments. Operating payments may be used to defray capital shortfalls and vice versa. Thus, separate update factors for operating and capital expenses do not reflect the way hospitals actually use their revenues or make investment decisions.

ProPAC therefore recommends the development of an update framework that includes capital and operating components for use as soon as practicable. Like the operating update ProPAC uses, the combined update approach should incorporate operating and capital market baskets to measure changes in prices, as well as adjustments for scientific and technological advances, productivity, and case-mix change. This would ensure that updates to both operating and capital base payment rates reflect increases in the cost of the goods and services that hospitals require to produce inpatient hospital care efficiently. Ultimately, operating and capital components should be included in a single market basket and set of adjustments.

Table 2-3. Estimated Fiscal Year 1996 Average Increase in Per Case Payments Under Fully Prospective Rates

Operating update factor	2.1%
Capital update factor	4.1
Total average update	2.3
Estimated case-mix index change (fiscal year 1996)	1.0
Total average increase in PPS payments*	3.3

* The total average increase in PPS payments reflects the multiplicative effects of the total average update and case-mix index change.

A combined fully prospective update would yield an increase of 2.3 percent under the Commission's recommendation. The total increase to payments, however, would be about 3.3 percent due to expected increases in the case-mix index (see Table 2-3).

Recommendation 4: Update Factor for Hospitals Paid on the Basis of Hospital-Specific Rates

For fiscal year 1996, payments based on hospital-specific base-year costs for sole community hospitals should be updated by the same factor as the rate for all other PPS hospitals. Furthermore, it is no longer necessary to calculate a separate update for these hospitals.

This recommendation would result in a 2.1 percent update to the hospital-specific rates for fiscal year 1996, consistent with the Commission's recommendation for the PPS update. Since the update is based on current projections of the fiscal year 1996 increase in the market basket index, its effective value may be modified as more current forecasts become available.

Following OBRA 1989, certain hospitals have been paid the higher of three amounts: the PPS rate, their own 1982 base-year costs updated to the current year, or their updated 1987 base-year costs. Sole community hospitals, which meet criteria related to distance from other hospitals or market share, qualify for this special treatment. Small rural Medicare-dependent hospitals—rural hospitals with fewer than 100 beds and at least a 60 percent Medicare share of total discharges or inpatient days—were also paid on the basis of hospital-specific rates through fiscal year 1994. These Medicare-dependent hospitals are now paid on the basis of the PPS rate.

Current law requires that the hospital-specific rates for sole community hospitals be updated at a rate equal to market basket minus 2.0 percentage points in fiscal year 1996, the same as for other PPS hospitals. ProPAC believes the update for these hospitals should be no different from that applied to all other PPS hospitals. Although these hospitals are accorded special treatment under PPS because they may face higher historical costs due to their special circumstances, they should be able to control their cost increases as other hospitals do. The factors considered in the Commission's update framework for PPS hospitals therefore are appropriate for these hospitals as well.

Recent data show that sole community hospitals have higher PPS and total margins than most other hospital groups. The Commission will continue to monitor the financial condition of sole community hospitals for signs of potential stress, but will no longer provide a separate recommendation unless conditions warrant it.

Recommendation 5: Update Factor for PPS-Excluded Hospitals and Distinct-Part Units

For fiscal year 1996, the target amounts for PPS-excluded hospitals and distinct-part units should be updated to account for the following:

- **The projected increase in the HCFA PPS-excluded hospital market basket index, currently estimated at 3.9 percent;**
- **An adjustment of zero percentage points to reflect the difference between the ProPAC and HCFA market baskets;**
- **A negative adjustment of 1.6 percentage points to correct for substantial error in the fiscal year 1994 market basket forecast; and**
- **An adjustment of zero percentage points for scientific and technological advances.**

This would result in an update factor of 2.3 percent.

When PPS was established, prospective payment based on DRGs could not be applied universally, so certain providers were excluded. Five types of specialty hospitals (psychiatric, rehabilitation, long-term, children's, and cancer) and two types of distinct-part units in general hospitals (psychiatric and rehabilitation) are now exempt from PPS. These providers are excluded primarily because DRGs fail to predict their resource costs accurately.

PPS-excluded hospitals and distinct-part units are subject to the payment limitations and incentives established in the Tax Equity and Fiscal

38

Responsibility Act of 1982 (TEFRA). Each provider is paid on the basis of its current Medicare-allowable inpatient operating costs per discharge or a target amount. The target amount is based on the provider's allowable costs per discharge in a base year, trended to the current year by an annual update factor. Medicare's share of allowable capital costs is paid in its entirety.

Under TEFRA, a facility with Medicare-allowable inpatient operating costs that are less than its ceiling (its target amount times the number of discharges) receives its costs plus either 50 percent of the difference between its costs and its ceiling or 5 percent of the ceiling, whichever is less. A facility with inpatient operating costs above its ceiling receives the ceiling plus 50 percent of the difference between the ceiling and its costs. Total payments, however, may not exceed 110 percent of the ceiling. Further, TEFRA provides an exceptions process whereby facilities may receive payment adjustments.

Although the Congress legislates the update to the TEFRA target amounts, the Secretary and ProPAC are required to recommend an annual update factor. Through fiscal year 1997, each facility is to receive an update ranging from the projected increase in the market basket index to the market basket increase minus 1.0 percentage points. The Commission recommends an average update to the target amount equal to the market basket minus 1.6 percentage points for fiscal year 1996 (see Table 2-4).

Market Basket—The update recommendation is determined primarily by the projected increase in the PPS-excluded market basket index. The market basket measures the price of inputs used by these facilities in treating Medicare patients. The current HCFA market basket increase forecast for fiscal year 1996 is 3.9 percent. There is no difference between the HCFA and ProPAC market basket forecasts for 1996, so no adjustment to reflect this difference is necessary.

Forecast Error Correction—ProPAC believes the update should be corrected for substantial past market basket forecast errors. Because projections must rely on available data, they cannot accurately anticipate all future economic conditions that may affect input prices. Updates based on market basket forecasts, therefore, may result in overpayments or underpayments to PPS-excluded facilities, which should not be carried forward to subsequent payment years. The market basket projection used to update TEFRA target amounts in fiscal year 1994 was 4.3 percent. The actual market basket increase, however, was only 2.7 percent. Therefore, the Commission's update recommendation includes a negative adjustment of 1.6 percentage points for fiscal year 1994 market basket forecast error.

Scientific and Technological Advances—ProPAC also believes the update should include an allowance for scientific and technological advances for PPS-excluded hospitals and distinct-part units. This allowance is intended to encourage providers to adopt quality-enhancing technologies, even when they increase costs. It reflects the Commission's judgment about the expected growth in the cost of scientific and technological advances used to provide inpatient services to Medicare beneficiaries.

To reach an informed judgment on the appropriate allowance, ProPAC reviewed prior

Table 2-4. Recommended Update Factor for PPS-Excluded Hospitals, Fiscal Year 1996

Components of the Update	
Fiscal year 1996 HCFA PPS-excluded market basket forecast*	3.9%
Adjustment for difference between HCFA and ProPAC market baskets*	0.0
Correction for fiscal year 1994 forecast error	-1.6
Allowance for scientific and technological advances	0.0
Total update	2.3

* Market basket forecast provided by the Health Care Financing Administration, Office of the Actuary, December 1994. The market basket forecast is subject to change as more current data become available.

allowances and made a general assessment of the change in the use and cost of technologies expected for fiscal year 1996. On the basis of this review, the Commission concluded that the diffusion of new technologies will not substantially increase Medicare costs in PPS-excluded facilities in fiscal year 1996. Therefore, it recommends no allowance for scientific and technological advances.

Unlike the update for PPS hospitals, the update for excluded facilities does not include a productivity adjustment. The productivity adjustment to the PPS update is based on the principle that Medicare should share in the savings generated by productivity improvements. However, Medicare automatically shares in the savings under TEFRA because part of any productivity increase is factored into reduced Medicare payments. A further reduction in payments for gains in productivity therefore would not be appropriate.

Revising the Payment Method—OBRA 1990 required the Secretary of Health and Human Services to propose revisions to the current payment system for PPS-excluded hospitals and distinct-part units. It also required ProPAC to comment on the Secretary's proposal. The Secretary's report has not been released. The Commission, however, submitted to the Congress in October 1992 an interim report on payment reform for PPS-excluded providers.

ProPAC's report findings suggested that, in aggregate, TEFRA payments to PPS-excluded facilities appeared adequate for most provider types. Notable exceptions were psychiatric hospitals and distinct-part units, and long-term hospitals. However, substantial variation in the proportion of facilities with costs exceeding their target amount was found across and within all provider types. Further, the Commission could not make definitive conclusions regarding the adequacy of the TEFRA payment system due to the lack of information on the amount of exceptions payments made to PPS-excluded providers. More recent data are consistent with these conclusions.

Specialty hospitals and distinct-part units were excluded from PPS primarily because the DRG patient classification system does not adequately group patients in these facilities according to resource use. However, considerable effort has been put into developing a patient classification system for rehabilitation hospitals and distinct-part units that is based on patient functional status. The Commission supports such efforts to develop prospective payment systems for specialty providers.

Although at this time prospective payment for these facilities is not feasible, modifications to the TEFRA payment method may be possible. Each type of PPS-excluded provider has unique patient characteristics and cost experiences, yet all receive the same basic update to the target amount. Further, TEFRA does not account for changes in case mix and relative wage rates. A more complete understanding of the cost characteristics of these facilities would help to identify appropriate revisions to the current payment system and update formula.

ProPAC encourages the Secretary to examine further the factors contributing to cost increases among these facilities. The Commission will continue to evaluate the appropriateness of the TEFRA system for PPS-excluded providers, and will respond to the Secretary's proposal for payment reform when it becomes available.

Recommendation 6: Update to the Composite Rate for Dialysis Services

For fiscal year 1996, the composite rate for dialysis services should be updated to account for the following:

- **The projected increase in the market basket index for dialysis services, currently estimated at 3.7 percent;**
- **A net adjustment of zero percentage points for scientific and technological advances and productivity; and**
- **A negative discretionary adjustment of 3.7 percentage points to reflect the relationship between payments and estimated fiscal year 1995 costs.**

This would result in an update of zero percent.

In 1972, the Congress extended Medicare coverage to almost all U.S. residents with end-stage

40

renal disease. These beneficiaries are entitled to all Medicare-covered services, including dialysis treatments or transplant services to replace lost kidney function. Since 1983, facilities that provide outpatient dialysis services have been paid a composite rate for each dialysis session. This rate is a prospective payment intended to cover the costs of services typically furnished during a dialysis treatment (related physician services are paid separately). Derived from data from 1977 through 1979, it represents a weighted average cost per treatment for dialysis provided in facilities and at home, according to the proportion of beneficiaries treated in each site. This method was intended to promote the less expensive home treatment alternative by paying the same amount for care provided in either site. The level of the composite rate has remained essentially unchanged since it was developed.

OBRA 1990 requires ProPAC to recommend an annual update to dialysis payments. In developing its recommendation for fiscal year 1996, the Commission first estimated how much costs would increase between fiscal years 1995 and 1996 using a framework similar to that used in the update recommendation for PPS hospitals. Then it evaluated the adequacy of the base payment rates to which the update factor would be applied. (See Appendix A for more information on the background analyses.)

Market Basket—The market basket index is intended to measure changes in the price of inputs dialysis facilities use to produce dialysis treatments. It reflects all the goods and services dialysis providers purchase. Using 1993 dialysis facility cost report data, four types of inputs were identified: capital, labor, other direct inputs, and overhead. Each component has a weight that represents its cost share, or proportion of total expenses. The price change for each component is measured by a proxy. The price proxies were adapted from those Medicare uses for the PPS, home health agency, and skilled nursing facility market baskets. The Commission's analysis indicates that the prices of inputs used in a dialysis treatment will rise by about 3.7 percent between fiscal years 1995 and 1996.

Scientific and Technological Advances—The scientific and technological advances allowance is intended to encourage dialysis facilities to adopt new technologies that improve the quality of patient care, even when they increase costs. It is an estimate of the expected increase in operating and capital costs that will result from the diffusion of new and emerging dialysis-related technologies during the coming fiscal year. To reach an informed judgment on the appropriate allowance, ProPAC examined the most important new cost-increasing innovations in the dialysis industry. On the basis of this analysis, the Commission estimates that facility costs will rise by 0.6 percent due to the adoption of new technologies in fiscal year 1996.

Productivity Improvement—The productivity adjustment is intended to provide dialysis facilities with a financial incentive for continued improvement in productivity through the more efficient use of resources. It is an estimate of the productivity gains that can be expected for the coming year. Historical data indicate that substantial productivity improvements in this industry have resulted in significant cost reductions. After considering a range of options, however, the Commission concluded that productivity gains of comparable magnitude are not likely for fiscal year 1996. Nevertheless, facilities can achieve modest productivity gains that will offset the costs of scientific and technological advances.

Discretionary Adjustment—ProPAC's update framework suggests that dialysis costs will increase by 3.7 percent in fiscal year 1996. An analysis of Medicare payments, however, indicates that, in aggregate, composite rate payments are essentially equal to estimated Medicare costs for fiscal year 1995. Moreover, Medicare payments to independent dialysis facilities—which make up the majority of facilities and provide the majority of treatments—are about 13 percent higher than Medicare-allowable costs. Therefore, most facilities are likely to have substantial Medicare profits in fiscal year 1996, despite rising costs. Accordingly, the Commission applied an off-setting adjustment to the update framework and recommends no increase to the composite rate at this time.

The Commission considered a separate update for hospital-based dialysis facilities. It is concerned about these providers' low ratio of payments to costs, which is estimated to be 0.76 in fiscal year 1995. This ratio has declined over time.

On average, the cost per treatment in hospital-based facilities is about 50 percent higher than in

independent facilities. Medicare recognizes this difference by paying hospital-based facilities $4 more per treatment. Medicare also provides for exceptions payments to facilities with justifiably higher costs. ProPAC analyses have been unable to explain hospital-based facilities' higher costs. Additional studies have not demonstrated differences in case severity, quality of care, or patient outcomes between hospital-based and independent facilities. Therefore, the Commission has no basis for recommending a differential update.

ProPAC also is concerned about future increases in the cost of providing dialysis services. In response to widespread concern within the industry regarding the adequacy of dialysis, HCFA is considering revisions to Medicare's conditions of participation to require facilities to document that treatments comply with adequacy standards. Many industry experts agree that to achieve these standards, facility costs will necessarily rise. The Commission believes that payments must recognize such costs.

ProPAC will continue to evaluate composite rate payments to dialysis facilities. Its analysis will focus on the difference between payments and costs, and how this relationship varies across providers and over time. Additionally, the Commission will analyze information regarding the relationship between facility costs, quality of care, and patient outcomes.

Improving PPS Payment Policies

The prospective payment system adjusts hospital payments in several ways to account for factors such as the level of teaching activity, wage rates, and patient complexity, which may legitimately affect hospital costs. These adjustments are important for providing fair payments to hospitals that reflect the circumstances they face.

As part of its mandate, the Commission examines the distribution of PPS payments across hospitals and makes recommendations concerning various adjustments to the payment system. ProPAC considers adjustments that are made both at a hospital level and at a case level. In this year's report, the Commission recommends improvements in the indirect medical education (IME) adjustment, outlier payment policy, the accuracy of DRG payment rates and coding change adjustments, and transfer payment policy.

Recommendation 7: Level of the Indirect Medical Education Adjustment to PPS Operating Payments

For fiscal year 1996, the indirect medical education adjustment to PPS operating payments should be reduced by 13 percent, from a 7.7 percent to a 6.7 percent increase for every 10 percent increment in teaching intensity. Ultimately, the indirect medical education adjustment should be reduced by about 40 percent, to a 4.5 percent increase for every 10 percent increment in teaching intensity.

The indirect medical education adjustment is intended to recognize the higher costs teaching hospitals incur in treating Medicare patients. These costs have been attributed to teaching hospitals caring for patients with more severe or complex illnesses, providing a broader scope of services and more services per patient, using a costlier mix of staff, and developing and introducing improvements in diagnostic and therapeutic technologies.

ProPAC annually estimates the relationship between teaching intensity and standardized Medicare operating costs per discharge. The measure of teaching intensity is based on the ratio of residents to beds. The standardization controls for differences in costs that are accounted for by other PPS payment factors. These include the local area wage index, the hospital's Medicare case-mix index, and outlier payments for extremely long or costly cases. ProPAC's analysis also controls for differences in costs associated with location in large urban, other urban, and rural areas. The most recent analysis was based on cost data from the ninth year of PPS and payment rules for fiscal year 1995. The results indicate that, on average, each 10 percent rise in teaching intensity is associated with a 4.5 percent increase in Medicare operating costs per discharge.

The estimated relationship between costs and teaching intensity is affected by changes in other PPS payment factors that account for differences in costs. For example, implementation of improvements in the accuracy of DRG rates and outlier

42

payment policy would alter the distribution of Medicare payments between teaching and non-teaching hospitals. (See Recommendations 8 and 9.) Modification of these components would influence the estimate of the relationship between costs and teaching intensity used by the Commission as the basis for its recommendation on the appropriate level of the IME adjustment.

The Commission recognizes that since PPS began, the Medicare program has more than adequately compensated teaching hospitals for the costs of treating Medicare patients. The current IME operating payment adjustment increases Medicare payments to teaching hospitals by about 7.7 percent for every 10 percent increment in teaching intensity. This is substantially above the 4.5 percent increase suggested by ProPAC's analysis. Moreover, PPS operating margins consistently have been higher for teaching than for non-teaching hospitals. This is especially true for major teaching hospitals (those with the highest levels of teaching intensity).

Accelerating price competition in the private sector, however, is reducing the ability of teaching hospitals to obtain the higher patient care rates from other payers that traditionally have contributed to financing the costs associated with graduate medical education. The Commission believes the purpose of the IME adjustment is to support the distinct role that teaching hospitals currently play in the provision of health care. It is concerned that a substantial and immediate reduction in Federal support might impair their ability to fulfill this role. In ProPAC's view, Medicare's responsibility to its enrollees extends beyond merely paying for beneficiaries' services to maintaining access to the quality and types of care provided at teaching hospitals. This might be affected adversely by a sharp decline in IME payments.

Given these considerations, a phased reduction of the IME adjustment is a prudent course of action. ProPAC's recommendation would reduce the adjustment by about one-third of the difference between the current 7.7 percent level and the 4.5 percent empirical estimate. Subsequent phases of the reduction should be implemented only after evaluation of the effect on access to quality care for Medicare enrollees. In addition, the distribution of IME payments across hospitals should be examined further, recognizing as an ultimate objective the use of the IME adjustment to compensate appropriately for differences in Medicare patient care costs that are attributable to medical education.

Previous Commission recommendations to reduce the IME adjustment have included provisions for budget-neutral redistribution of the savings, generally through corresponding increases in the standardized amounts. In the seven years since the IME adjustment was last changed, however, other components of the prospective payment system have been modified. Policy and technical changes have shifted the distribution of payments among hospital types. The distribution of PPS payments no longer resembles the original base-year costs on which the system was based. Therefore, ProPAC is not recommending that the anticipated decrease in IME payments be returned to all hospitals through a proportionate increase in the standardized payment amounts.

Changes in the IME adjustment should be considered in the context of its interactions with other payment system components and its effects on PPS payments, as well as hospitals' overall financial status. The impact on quality and access to care should also be considered. In the coming year, ProPAC will continue to examine the level and structure of the IME adjustment and other factors that affect hospitals' payments, costs, and financial condition. The distribution of PPS and total margins and the other effects of potential changes in the IME adjustment will be studied. For more information on ProPAC's most recent analyses, see the technical report, *The Indirect Medical Education Adjustment to PPS Payments* (forthcoming).

Recommendation 8: Improving Outlier Payment Policy

The Medicare statute should be amended so that the estimated cost of a case for determining outlier payment and the outlier payment amount are not adjusted to reflect a hospital's teaching and disproportionate share status. This change would make the outlier payment policy more effective in protecting hospitals from the risk of large losses on some cases.

Under PPS, a hospital receives a fixed payment rate per discharge for each type of patient. The

diagnosis-related groups used to classify patients and establish these rates are designed to group cases with similar expected resource requirements. The hospital then faces the risk that its costs for a case may differ from the DRG payment rate it receives.

Most hospitals should be able to offset losses from more costly cases with gains from less costly ones. Because the cost of treatment may vary widely among the cases in any DRG, however, even efficient hospitals may have some cases for which costs are much higher than the DRG payment rate. These cases represent large financial losses for the hospitals that treat them.

To reduce financial risk and incentives to avoid treating such patients, hospitals are eligible to receive additional payments for cases with unusually long stays (day outliers) or unusually high costs (cost outliers). OBRA 1993 substantially changed PPS payment policies for these cases. Beginning in fiscal year 1995, additional payments for day outliers are being phased out over four years. Also beginning this year, a case qualifies for additional payments as a cost outlier if the hospital's estimated cost for the case exceeds a fixed loss threshold.

A hospital's loss threshold for a DRG is determined by adjusting a national fixed loss amount ($20,500 for fiscal year 1995) by the hospital's wage index and cost of living adjustment (COLA), and adding this amount to the hospital's base payment rate for the DRG. For a case with estimated costs above the threshold, the hospital receives an additional payment equal to 80 percent of the difference.

With fixed loss thresholds, the amount of loss a hospital must incur before receiving additional payments is the same for all DRGs. Although DRG-specific loss thresholds differ among hospitals according to their wage index and COLA values, the real (input price adjusted) amount of loss is constant. This is consistent with the concept that a dollar of real loss is equally important, regardless of the DRG or hospital in which it occurs.

The amount of loss a hospital incurs, however, also depends on how the costs of a case are measured. Currently, these costs are estimated by adjusting the hospital's billed charges for Medicare-covered services by its overall average cost to charge ratio. Then, the estimated costs are standardized (reduced) to reflect the hospital's indirect medical education and disproportionate share (DSH) payment adjustments.

Under this policy, a case in a teaching or disproportionate share hospital is considered to be less costly than one with equal adjusted charges in a non-teaching, non-disproportionate share hospital. Therefore, similar cases treated in a teaching or disproportionate share hospital are less likely to qualify for cost outlier payments. And when they do, the outlier payment is smaller. Although outlier payments are then increased by each hospital's IME and DSH adjustments, this does not make up for the reduced outlier payments these hospitals receive.

This policy leads to payment inequities among hospitals. In addition, the outlier payment policy is less effective than it could be in limiting the financial risk associated with extraordinarily costly cases. Therefore, the Commission believes the estimated cost of a case and the outlier payment should not be adjusted to reflect a hospital's IME and DSH status.

In its March 1994 *Report and Recommendations to the Congress*, ProPAC recommended implementing this change for fiscal year 1995. In her response to the Commission's recommendations, the Secretary agreed with this proposal. She indicated that she has authority to eliminate the IME and DSH adjustments now applied to reduce the estimated cost of a case. However, current law requires her to apply these adjustments to all payments based on the DRGs, including those for outliers. Eliminating the adjustments applied to estimated costs without doing so for outlier payments would merely create opposite payment inequities. Consequently, she was unwilling to act without the ability to implement both changes simultaneously.

To resolve this problem, ProPAC recommends amending the Medicare statute to apply the IME and DSH adjustments only to the base DRG payments hospitals receive for all cases. This would eliminate the current IME and DSH add-ons to outlier payments. If possible, the law should be modified early enough to permit the Secretary to implement this change for fiscal year 1996.

44

Following this change, the Secretary should discontinue applying the IME and DSH adjustments to reduce estimated costs for outlier cases. This would increase outlier payments for extraordinarily costly cases treated in teaching and disproportionate share hospitals. In addition, it would concentrate outlier payments on the highest-cost cases, thereby increasing the effectiveness of outlier policy in limiting the associated financial risk.

Recommendation 9: Making DRG Payment Rates More Accurate

> **The Secretary should implement, as soon as practicable, the DRG severity refinements developed by the Health Care Financing Administration. At the same time, she should improve the accuracy of basic DRG payment rates and outlier payments by changing the methods used to calculate the DRG relative weights. The weights should be based on the national average of hospital-specific relative values for all cases in each DRG, rather than the national average standardized charge per case.**

Under PPS, a hospital receives a base DRG payment rate for each case. It also may receive outlier payments for a case with an unusually long stay or extremely high costs.

The base payment rate for each DRG is determined by multiplying the hospital's base payment amount, which is the same for all cases, by the relative weight for the DRG. The DRG definitions used to classify cases and calculate the relative weights are intended to group cases that are clinically similar and have comparable expected resource requirements. The relative weight for each DRG is intended to measure the relative costliness of a typical case in that category compared with the average cost of all typical Medicare cases.

The methods used to create the key components of this system lead to inaccurate payment rates for individual cases and payment inequities among hospitals. The DRG definitions do not completely account for the effect of variations in severity of illness on hospitals' treatment costs. In addition, the method of calculating the DRG weights leads to systematic errors in the DRG payment rates. Finally, financing outlier payments by a uniform offset to the standardized amounts also may distort the payment rates.

ProPAC believes these problems could be substantially alleviated if DRG refinements and improvements in calculating the weights were adopted, as outlined below. The Commission also has considered changes in the financing of outlier payments. However, it has yet to find a solution that makes the payment rates more accurate for typical cases and preserves broad-based outlier financing across hospitals. ProPAC will continue to examine this issue in the coming year.

DRG Refinement—Currently, all cases are classified in one of 490 DRGs. In many instances, the DRG definitions fail to distinguish significant subgroups of patients that have distinctly different treatment costs. These differences are often related to the presence or absence of specific secondary diagnoses that usually affect the cost of care substantially.

HCFA recently developed major refinements to the DRG definitions that are designed to account for the impact of these secondary diagnoses on costs. The refined DRGs appear to be better able than the current ones to distinguish among cases with different expected costs. Other things equal, implementing the refined DRGs would increase the spread of the relative weights and the accuracy of the payment rates.

Using the new DRGs, some cases now classified in a single category would be assigned to two or three categories with substantially different weights. For example, cases that involve spinal procedures are assigned to DRG 4; in fiscal year 1994, the relative weight for this category was 2.38. Under the refined DRGs, such cases would be allocated among three categories with weights of 1.49, 2.65, and 5.52, respectively.

In other instances, cases now classified in two DRGs would be assigned to two or three more distinct groups. The major chest trauma DRGs (with and without complicating conditions) had weights of 0.50 and 0.94 in fiscal year 1994. Under HCFA's proposal, these cases would be assigned to three DRGs with weights of 0.53, 0.89, and 1.57, respectively.

In addition, the refined DRGs would more accurately identify outlier cases because the payment rates would provide a better standard of comparison. Consequently, adopting the new DRGs would tend to reduce current discrepancies between payments and costs for individual cases and improve payment equity among hospitals.

This change would tend to increase payments to hospitals that have a high case-mix index (such as major teaching hospitals), and reduce payments to those with a low case-mix index (small urban and rural hospitals). Although these effects would hold in general, the impact would vary substantially within such groups.

Some hospitals that would benefit are already treated relatively favorably under PPS because of other errors in the weights or other payment policies, such as those for teaching and disproportionate share hospitals or outlier cases. Similarly, some that would receive lower payments are currently disadvantaged for the same reasons. Therefore, to make payments more equitable overall, other sources of payment inequities also would need to be addressed.

Hospital-Specific Relative Value Weights— The weights for all DRGs are based on the national average standardized charge per case in each category, using the most recent billing data available. The billed charges for each case in a DRG are standardized to remove differences in costs related to three factors. These include geographic variation in hospital input prices (wage rates and price levels for supplies and other non-labor inputs), differences among hospitals in teaching activity (the IME adjustment), and variation in the extent of service to low-income patients (the DSH adjustment). Then, cases with extremely high or low standardized charges (statistical outliers) are identified and removed. Preliminary weights are created by calculating the national average standardized charge per case for the remaining cases in each DRG, and dividing this average by the overall national average standardized charge per case. Finally, the preliminary weight in each DRG is multiplied by a recalibration factor. This factor, which is the same for all DRGs, is necessary to ensure that annual changes in the DRG definitions and weights do not affect the aggregate amount of payments under PPS.

The weights are intended to measure the relative costliness of treating a typical case in each DRG, compared with the overall average cost of typical Medicare cases. Because they are based on the national average standardized charge per case in each DRG, however, they are subject to distortions that arise from several sources. One of these is systematic differences among hospitals in the mark-up of charges over costs. Overall average cost to charge ratios vary systematically among hospitals according to ownership, size, teaching and disproportionate share status, and location. In addition, the pattern of mark-ups among services varies across hospitals.

If the cases in all DRGs were distributed at random among all hospitals, these differences would not create any systematic distortion in the relative weights. In fact, however, cases in high-weight DRGs are more likely to be treated in institutions with relatively high charges, such as large teaching and disproportionate share hospitals in urban areas. Conversely, cases in low-weight DRGs are more likely to be treated in small urban and rural hospitals that have relatively low charges. Consequently, the average mark-up implicit in the case-level charges varies among the DRGs. This distorts the DRG weights, making them vary more than the actual relative cost of treatment.

A similar problem results from systematic differences in the level of costs among hospitals. The current method of standardizing the charges for each case is intended to remove variation that is attributable to geographic differences in the level of input prices, and hospital-specific differences in teaching activity and service to the poor. However, the payment adjustment factors used for this purpose do not accurately represent cost differences among hospitals. Moreover, these adjustments do not account for systematic differences in the level of costs due to other factors, such as variations in practice patterns and efficiency. Because cases in each DRG are not randomly distributed among hospitals, these differences also may affect the DRG weights.

These problems could be addressed by calculating the weights based on hospital-specific relative values. Under this method, the relative weights could continue to be calculated using hospitals' billed charges for all cases. However, the charges

46

for each case would be divided by the hospital's overall average charge per case, and then adjusted to reflect the same scale of costs across all hospitals. This would create a hospital-specific relative value for each case. Then, the national relative weight in each DRG would be calculated as the case-weighted average of the relative values for all cases in the category.

The hospital-specific relative value method would automatically remove distortions in the weights caused by variation in hospitals' charge mark-ups and costliness. It also would eliminate the need to standardize hospitals' charges. The Commission's analysis indicates that DRG weights based on this method (relative value weights) differ substantially from the current weights. The relative value weights are consistently higher in DRGs with low current weights. Conversely, they are often lower (though less consistently) in DRGs with high current weights. These differences occur because cases in low-weight DRGs are more likely to be treated in small urban and rural hospitals with lower average charges, while cases in high-weight DRGs are more likely to be treated in large urban hospitals with high charges.

Other things equal, using relative value weights would tend to increase payments to small urban and rural hospitals, and reduce payments somewhat for large urban hospitals. These anticipated effects are generally opposite those of adopting the DRG severity refinements. ProPAC believes, however, that both changes would improve payment accuracy for individual cases. Therefore, they should help lessen current disparities between payments and costs for many cases.

Adjusting the Weights to Reflect Outlier Payments in Each DRG—The Commission also has considered potential changes in policy designed to correct errors in the payment rates that arise from inconsistencies between the methods used to calculate the DRG weights and those used to finance outlier payments.

Under current policy, outlier payments are financed by a uniform reduction in the standardized payment amounts (5.1 percent for fiscal year 1995). The uniform outlier financing adjustment reduces all hospitals' basic DRG rates proportionately. Outlier cases and payments, however, are highly concentrated in certain DRGs. (Outlier payments as a proportion of total DRG payments vary from less than 1 percent in many DRGs to more than 20 percent in a few categories.) This affects the relative weights of DRGs that have a high proportion of outlier payments because each weight is based on the national average standardized charge for all cases in the category, including outlier cases with extremely high charges. Consequently, the weights overstate the relative costliness of a typical case in DRGs with a high proportion of outlier payments (high-risk DRGs).

This pattern of bias in the DRG weights combines with the uniform outlier financing adjustment to produce both upward and downward errors in the DRG payment rates. The upward effects on the weights for high-risk DRGs are only partially offset by the 5.1 percent reduction in the standardized amounts. The weights for DRGs with a low proportion of outlier payments (low-risk DRGs), however, have little or no bias. Consequently, the 5.1 percent outlier financing adjustment reduces the payment rates too much for these DRGs. Therefore, the payment rates may be too low in low-risk DRGs, and too high in high-risk DRGs.

Although these errors primarily affect basic DRG payments, they also alter the distribution of outlier payments among hospitals. This occurs because the fixed loss thresholds are set too high in high-risk DRGs (since the basic DRG rates are too high), and too low in low-risk DRGs (where the DRG rates are too low). As a result, outlier payments are smaller than they otherwise would be for cases in high-risk DRGs, and larger than they would be for cases in low-risk DRGs.

To solve this problem, ProPAC investigated the desirability of making DRG-specific offsets to the relative weights to finance outlier payments. Under this approach, each DRG weight would be reduced to reflect the estimated proportion of outlier payments in that category based on the most recent billing data. In addition, the standardized payment amounts would be increased to remove the current outlier financing adjustment. This would change the DRG weights, the fixed loss outlier thresholds, basic DRG payments, and the amounts and proportions of outlier payments by DRG.

The revised DRG weights based on this approach would more accurately reflect the actual relative costliness of treating typical cases in each DRG. Therefore, this policy would tend to reduce existing discrepancies between payments and costs for many individual cases. The Commission is concerned, however, that this approach would impose an unfair burden on hospitals that treat cases in high-risk DRGs, because the full cost of extra payments for outlier cases would be financed through reduced base payment rates in those DRGs.

Current outlier financing policies raise two issues. One is how to account for outlier payments in setting a weight that accurately reflects the relative costliness of treatment for typical cases. The second issue is how to finance outlier payments so that the burden of treating such cases is spread fairly among all hospitals. Although these problems can be separated conceptually, the Commission has not yet found a method that addresses both adequately. In the coming year, ProPAC will continue to explore alternative solutions to these issues.

Recommendation 10: Improving Annual Update Policies

> **The Secretary should be given authority to adjust the standardized amounts if anticipated coding improvements would increase aggregate payments by more than 0.25 percent during the coming year. This adjustment should be separate from the annual update. It should be based on findings from empirical analysis of the new HCFA database of reabstracted medical records. Once sufficient data are available, the Secretary also should make a correction if there is more than a 0.1 percentage point error in a previous adjustment.**

Under current law, the Secretary is required to update the DRG definitions and weights annually to account for changes in practice patterns, medical science, and technology that alter the relative use of hospital inpatient resources among types of patients. In most years, the Secretary has made minor changes in the DRG definitions to address issues raised by the public and the hospital industry regarding the current classification of patients. The Secretary also recalculates the relative weights each year to reflect changes in the relative costliness of each type of case, as indicated by the most recent billing data.

In making these changes, the Secretary is required to hold constant the estimated aggregate payments under PPS for the coming year. This requirement is met through recalibration of the weights, coupled with a budget neutrality adjustment to the standardized payment amounts. The annual recalibration adjusts the new weights so that the national average relative weight using the new DRG definitions and weights is equal to the national average based on the current year's definitions and weights. This removes most of the potential effect of changes in the DRGs and the weights on aggregate payments. A small budget neutrality adjustment is usually necessary to ensure that estimated aggregate payments remain unchanged.

These adjustments are applied to the rates that will be used in making payments to hospitals during the coming year. They are based on billing data that are always two years old. Adjustments for fiscal year 1995, for example, were based on bills for cases discharged during fiscal year 1993.

Actual payments, however, may differ from the earlier estimate for several reasons. The mix of cases among the DRGs may have shifted due to changes in practice patterns or variation in the incidence of illness. Such real changes in case mix are expected to generate corresponding changes in the cost of furnishing treatment. Consequently, the accompanying changes in payment are appropriate.

In addition, hospitals may have improved the accuracy and completeness of the coded clinical information they report on the bills, shifting cases among the DRGs. This kind of case-mix change generally redistributes payments among hospitals and increases total payments. The redistribution of payments is appropriate because the improved case-mix index more accurately reflects the true incidence of treatment costs. However, shifts in case mix caused by changes in reporting would not be expected to increase the aggregate cost of treating Medicare patients, since cases are merely reclassified into different DRGs. Therefore, the accompanying changes in aggregate payments are not appropriate. (See

48

Appendix A for a discussion of the components of case-mix change.)

Although both ProPAC's and the Secretary's update recommendations exclude the estimated historical change in case mix due to improvements in coding, neither attempts to exclude prospectively the coding change expected in the following year. Thus, under current policy, hospitals get the benefit of any coding improvements during the year in which they occur; estimates of these effects are then removed from the base payment amount in the next annual update. In fact, however, the Congress sets the annual update factor in law. Consequently, it is difficult to know whether the effects of coding changes are fully or partially offset each year.

In recent years, the Secretary has repeatedly raised concerns about the impact of coding changes that might accompany major changes in the DRGs. The severity refinements to the DRGs would create a number of new DRGs with very high weights. A hospital would receive a much larger payment if one of a set of major complications were coded on the bill. Consequently, implementing the refined DRGs could lead to a major change in the relative importance of these secondary diagnoses, and more effort by hospital coders to ensure that they are coded on the bill when they appear in the patient's medical record. This is not inappropriate behavior. But it does raise the problem of how to ensure that hospitals are fairly compensated for changes in costs that result from real changes in the mix of cases, while protecting the Medicare program from increases in payments that result only from better reporting.

To address this problem, the Secretary should be given authority to make an off-setting adjustment to the standardized amounts, separate from the annual update, when substantial improvements in coding are expected during the coming year. This would require a change in current law. In addition, the Congress should modify its legislated annual updates to appropriately account for this change.

An ongoing database of reabstracted medical records also would be needed to estimate the real and coding components of case-mix change, and provide a basis for forecasting future coding changes. Recently, HCFA has developed a monthly random sampling and reabstraction process, under the Peer Review Organization program, that will provide data on about 30,000 records per year. Using such data for the most recent two years, it would be possible to estimate the increase in the case-mix index that would occur if all hospital coders began to code records as accurately and completely as the reabstract coders do. Then, a judgment could be made about how to adjust (reduce) the estimate to reflect the fact that coding accuracy is unlikely to improve by the full amount of the estimate (and certainly not during the course of a single year).

ProPAC believes strongly that adjustments for anticipated coding change should be based only on findings from empirical analysis of the reabstracted data, reduced by judgment as described above. They should not incorporate any assumptions or projections regarding other potential behavioral responses by hospital coders. The Secretary's authority should be limited to occasions in which projected coding changes would increase aggregate payments by more than 0.25 percent.

If the projection were reasonably accurate, the hospital industry would no longer reap the benefit of substantial coding changes. The Medicare program also would avoid large, inappropriate increases in payments. On the other hand, it may be difficult to make accurate forecasts of coding change. Consequently, once sufficient data are available, the Secretary should also make a correction when forecasts diverge from actual experience by more than 0.1 percentage points. This would protect both the program and the hospital industry from the effect of large projection errors.

ProPAC also is concerned about the impact of forecast errors in other adjustments to the PPS payment rates. As part of its annual update recommendation, for example, the Commission makes an adjustment for past forecast errors related to the projected increase in the market basket index. Under current update policies, however, both the Medicare program and hospitals are at risk for discrepancies between the outlier financing offset to the standardized amounts and the actual amount of outlier payments. Despite HCFA's best efforts, outlier payments in recent years have repeatedly fallen well below the 5.1 percent outlier offset. To limit the impact of such errors on the DRG payment rates, ProPAC will include a forecast

error correction for this adjustment as part of its recommendation for fiscal year 1997.

Recommendation 11: Improving Medicare Transfer Payment Policy

PPS hospitals that treat Medicare patients who are then transferred to another PPS hospital should be paid on the basis of a graduated per diem payment up to the full DRG amount to recognize the higher daily costs associated with the first few days in a patient stay. The Secretary's proposal to pay twice the per diem payment for the first day in a transfer stay would significantly improve Medicare's payment for these cases.

PPS hospitals that treat Medicare patients who are transferred to another PPS hospital are paid a uniform per diem based on the DRG up to the full payment rate for the case. The final hospital in a transfer sequence receives the full DRG payment for that stay, although the patient involved in the transfer may be assigned to a different DRG for each hospitalization.

ProPAC analysis found that the uniform per diem payment for the transferring hospital undercompensated that hospital for the care furnished during the stay. Payment to cost ratios were substantially below average for cases with short stays, but were closer to average for cases with typical stays. This is because a uniform per diem payment does not recognize the frequently higher costs associated with stabilization, evaluation, and surgery that generally take place early in a patient's hospital stay. In its analysis, HCFA discovered similar problems with transfer payment. The Commission's analysis also found that the receiving hospital was undercompensated for transfer cases because, on average, a larger percentage of these cases become outliers.

In ProPAC's view, the payment system should not influence the decision to transfer a patient. Rather, the decision should be based solely on appropriate patient care. Although there is no evidence that hospitals are avoiding these patients now, Medicare should adequately compensate for transfer cases.

A graduated per diem payment would more accurately reflect the higher daily costs incurred during the first few days of care. HCFA's analysis shows that payment to cost ratios for these cases could be improved significantly if a graduated per diem payment were adopted. A simple doubling of the per diem for the first day of a patient stay in a transfer sequence increased from 0.72 to 0.93 payment to cost ratios for cases paid on the basis of a per diem. Such a graduated per diem payment is necessary, in the Commission's opinion, to improve Medicare payment for these cases and create appropriate incentives for accepting transfers.

ProPAC also continues to be concerned about the impact of outlier payment policy on transfer cases. Compared with other cases, transfer cases received by another hospital are more than twice as likely to become outliers. Further, the losses on these cases tend to be greater than those for outliers who were not transferred. While many of the Commission's outlier payment recommendations have been adopted, the proposal to remove IME and DSH adjustments from case-level costs and outlier payments has not. (See Recommendation 8.) ProPAC analysis has found that, without this change in policy, the other changes recently made in outlier payment policy actually exacerbate the payment inequity for hospitals that receive a large number of transfer cases.

Finally, the Commission is concerned about the continuity of care across treatment settings and the role of Medicare payment policies in fostering service provision in the most appropriate site. ProPAC is pleased that the Secretary has been examining this issue and is looking at alternative payment strategies, such as paying hospitals that transfer patients to non-PPS settings a per diem instead of the full DRG amount. Further study is necessary before such a policy is adopted, however. The Commission would be happy to work with the Secretary in this endeavor.

Strengthening Hospital Outpatient Payment Policies

The past decade has seen unprecedented growth in the delivery of care in hospital outpatient and other ambulatory settings. As the number of services provided in alternative settings increases, so do Medicare payments. ProPAC has been concerned about appropriate payment policies to constrain the volume of ambulatory services. Additionally, the Commission has considered changes to

50

Medicare's payment for hospital-provided outpatient services to correct problems with excessive beneficiary liability and higher than intended program payments. Recommendations on these two issues follow.

Recommendation 12: Controlling the Volume of Hospital Outpatient and Other Ambulatory Services

> **The Secretary should conduct research on appropriate and effective volume control methods for services provided in hospital outpatient departments and other ambulatory settings. Even with a prospective payment system that relies on Ambulatory Patient Groups or some other service classification scheme, Medicare spending for ambulatory services will continue to grow at a rapid pace because of increased volume. The Secretary should also address how the changing health care delivery system will affect utilization and site of care.**

The Commission supports the Secretary's efforts and congressional intent to establish prospective payment methods for hospital outpatient services under the Medicare program. The Secretary is considering a payment system that would rely on Ambulatory Patient Groups to classify procedures and would assign the same payment rate to similar services. Such a system would create incentives for controlling costs by offering providers the opportunity for a profit as well as the risk of financial loss. The current payment method for hospital-provided outpatient services contributes to both cost and charge inflation. Because payments incorporate at least a portion of facility-specific costs or charges, hospitals that reduce their costs receive less in payments. Thus, there is little financial incentive to deliver care more efficiently.

ProPAC recognizes, however, that a prospective payment rate per unit of service does not control the number of services provided. In the hospital outpatient department, as in all ambulatory settings, increased volume has significantly affected spending growth.

Various methods to control the volume of ambulatory services in the hospital setting, as well as in other sites, should be explored. These include bundling, or grouping services into a package for which a single payment is made; expenditure targets, or setting an acceptable rate of expenditure growth combined with measures to reduce future outlays if the target is exceeded; and capitated methods, or putting providers at financial risk for a defined set of services. The Commission has conducted preliminary analyses of the volume control potential of bundling. Such an approach may limit the increase in ancillary service use, which currently accounts for a small portion of payments associated with outpatient surgeries or radiology procedures. It is unlikely, however, to control the number of surgical and radiological services. Other methods to constrain volume, such as utilization review, case management, and limiting the growth of providers, also should be explored.

In these analyses, the unique characteristics of ambulatory services that contribute to the difficulty in controlling use should be considered. First, most of these services are provided in multiple settings such as hospital outpatient departments, physicians' offices, and free-standing ambulatory clinics. Because Medicare's payment methods differ by site of service, if payment and volume controls are imposed in one setting, utilization probably would shift to another. Second, the broad range of ambulatory services and procedures, combined with the diverse reasons for an ambulatory encounter, complicate the appropriate grouping of services into a payment bundle or under an expenditure target. Third, the difficulty in defining the unit for outpatient payment, along with multiple ambulatory provider types, leaves many opportunities to increase service use and makes it difficult to establish the appropriate payment rate. Finally, data on expected and appropriate ambulatory service use are inadequate; such information would be needed to develop capitated payment rates.

The Secretary should consider the dramatic changes taking place in the organization of health care delivery as volume control methods are being explored. Some private insurers have changed the mix and reduced the use of services through managed care techniques. The Medicare program should explore adopting some of these innovative methods to constrain total program expenditures. New relationships among providers, as evidenced

by the increase in integrated delivery networks, are likely to change referral patterns and choice of service site. It is important that Medicare's payment mechanisms account for these changing characteristics of the delivery system.

Recommendation 13: Changes to Medicare's Hospital Outpatient Payment Method

Beneficiary coinsurance for hospital-provided outpatient services should be reduced from 20 percent of charges to 20 percent of payments. Further, until prospective payment for hospital outpatient services is implemented, the payment formula should be changed to fully reflect beneficiary coinsurance payments. The savings from correcting the payment formula should be used to offset program expenditure increases caused by reducing beneficiary liability.

The Medicare beneficiary's share of the payment for hospital-provided outpatient services is significantly more than what the Congress intended. It exceeds 20 percent of the total payment and, therefore, is higher than it would have been had services been provided in another setting. Because payments for these services are not prospective and thus not known until annual cost reports are settled, copayments are calculated as 20 percent of charges, rather than 20 percent of payments. Historically, payments and charges were similar, so the beneficiary's share was not excessive. Over time, however, charges have grown significantly faster than Medicare payments, resulting in an increasing proportion of payments coming from the beneficiary. According to HCFA estimates for 1994, beneficiary copayments for ambulatory surgeries, radiology procedures, and diagnostic services furnished in hospital outpatient settings equaled about 50 percent of payments. This is projected to grow to almost 70 percent by 2000.

The Commission believes the beneficiary share should be reduced immediately. It recognizes this means that copayments would need to be based on an estimate of payments until a prospective system is implemented. This change also will significantly increase Medicare outlays. If necessary, the policy could be phased in over several years. Nevertheless, ProPAC believes relief to Medicare beneficiaries should not wait until the implementation of prospective payment for these services.

A related problem with Medicare's hospital outpatient payment method for most ambulatory surgeries, radiology procedures, and diagnostic services should be corrected at the same time. Payments are based on a formula that combines hospital-specific costs or charges with a prospective rate. The facility-specific proportion is reduced by 20 percent to reflect the beneficiary's coinsurance. The other portion of the payment is based on 80 percent of the applicable prospective rate. Because the second part of the formula reflects the incorrect assumption that 20 percent of the prospective rate equals 20 percent of charges, Medicare program payments are not reduced by the full amount of beneficiary coinsurance. This results in hospitals receiving higher payments than were intended, the so-called formula-driven overpayment. The discrepancy between what should have been paid and what actually was paid has been increasing each year because hospital charges continue to grow faster than the prospective rates. Therefore, the formula should be corrected as soon as possible.

Both of these problems provide incentives for hospitals to raise their charges, thereby increasing beneficiary liability and total payments. Further, the difference between what payments should be and actual payments widens.

In view of the relationship between these two problems and their off-setting cost effects, the Commission recommends correcting them simultaneously. The payment formula flaw will result in outlays that are nearly $1.7 billion higher than intended in 1996, according to HCFA. The savings from eliminating this flaw could be used to help offset the higher program costs related to lower beneficiary copayments. Depending on assumptions about behavioral responses to the payment change and when it is implemented, correcting the formula could finance between one-quarter and one-half of the increased payments resulting from reducing beneficiary liability. Some legislative proposals include correcting the payment formula to achieve budget savings. Given the related nature of these two problems and the magnitude of beneficiary coinsurance payments, however, they should be addressed together.

[FR Doc. 95–13183 Filed 6–1–95; 8:45 am]
BILLING CODE 4120–01–C

federal register

Friday
June 2, 1995

Part III

Department of Agriculture

Agricultural Marketing Service

7 CFR Parts 1007, 1093, 1094, 1096, and 1108

Milk Marketing Orders: Georgia et al.; Final Rule

DEPARTMENT OF AGRICULTURE

Agricultural Marketing Service

7 CFR Parts 1007, 1093, 1094, 1096, and 1108

[Docket Nos. AO–366–A36, et al.; DA–93–21]

Milk in the Southeast Marketing Area; Order Amending and Merging Orders

7 CFR part	Marketing area	Docket No.
1007	Georgia	AO–366–A36
1093	Alabama-West Florida.	AO–386–A14
1094	New Orleans-Mississippi.	AO–103–A56
1096	Greater Louisiana.	AO–257–A43
1108	Central Arkansas.	AO–243–A46

AGENCY: Agricultural Marketing Service, USDA.

ACTION: Final rule.

SUMMARY: This final rule combines five Federal milk order marketing areas with unregulated counties in Arkansas, Georgia, Mississippi, and Tennessee to form the Southeast marketing area. It is based on industry proposals to merge the individual marketing areas so as to more equitably divide the markets' proceeds in what essentially has become a single, large market with significantly overlapping sales and procurement areas. More than two-thirds of the affected dairy farmers participating in a referendum voted in favor of the merged order.

EFFECTIVE DATE: July 1, 1995.

FOR FURTHER INFORMATION CONTACT: Nicholas Memoli, Marketing Specialist, USDA/AMS/Dairy Division, Order Formulation Branch, Room 2971, South Building, PO Box 96456, Washington, DC 20090–6456, (202) 690–1932.

SUPPLEMENTARY INFORMATION: This administrative rule is governed by the provisions of sections 556 and 557 of Title 5 of the United States Code and therefore is excluded from the requirements of Executive Order 12866.

The Regulatory Flexibility Act (5 U.S.C. 601–612) requires the Agency to examine the impact of a proposed rule on small entities. Pursuant to 5 U.S.C. 605(b), the Administrator of the Agricultural Marketing Service has certified that this rule will not have a significant economic impact on a substantial number of small entities. The amendments will promote orderly marketing of milk by producers and regulated handlers.

This final rule was reviewed under Executive Order 12778, Civil Justice Reform. This action is not intended to have a retroactive effect and will not preempt any state or local laws, regulations, or policies, unless they present an irreconcilable conflict with this rule.

The Agricultural Marketing Agreement Act of 1937, as amended (7 U.S.C. 601–674), provides that administrative proceedings must be exhausted before parties may file suit in court. Under section 608c(15)(A) of the Act, any handler subject to an order may file with the Secretary a petition stating that the order, any provision of the order, or any obligation imposed in connection with the order is not in accordance with the law and requesting a modification of an order or to be exempted from the order. A handler is afforded the opportunity for a hearing on the petition. After a hearing, the Secretary would rule on the petition. The Act provides that the district court of the United States in any district in which the handler is an inhabitant, or has its principal place of business, has jurisdiction in equity to review the Secretary's ruling on the petition, provided a bill in equity is filed not later than 20 days after the entry of the ruling.

Prior documents in this proceeding:

Notice of Hearing: Issued September 3, 1993; published September 10, 1993 (58 FR 47653).

Supplemental Notice of Hearing: Issued October 13, 1993; published October 15, 1993 (58 FR 53436).

Extension of Time for Filing Briefs: Issued January 24, 1994; published February 3, 1994 (59 FR 5132).

Recommended Decision: Issued November 21, 1994; published November 29, 1994 (59 FR 61070).

Extension of Time for Filing Exceptions: Issued December 27, 1994; published January 3, 1995 (60 FR 65).

Final Decision: Issued May 3, 1995; published May 10, 1995 (60 FR 25014).

Findings and Determinations

The following findings and determinations supplement those that were made when the orders were first issued and when they were amended. The previous findings and determinations are hereby ratified and confirmed, except where they may conflict with those set forth herein.

(a) *Findings.* A public hearing was held upon certain proposed amendments to the tentative marketing agreements and to the orders regulating the handling of milk in the aforesaid marketing areas. The hearing was held pursuant to the provisions of the Agricultural Marketing Agreement Act of 1937, as amended (7 U.S.C. 601–674), and the applicable rules of practice and procedure (7 CFR part 900).

Upon the basis of the evidence introduced at such hearing and the record thereof, it is found that:

(1) The Southeast order, which amends and merges the aforesaid orders, and all of the terms and conditions thereof, will tend to effectuate the declared policy of the Act;

(2) The parity prices of milk, as determined pursuant to section 2 of the Act, are not reasonable in view of the price of feeds, available supplies of feeds, and other economic conditions which affect market supply and demand for milk in the aforesaid marketing areas. The minimum prices specified in the order as hereby amended are such prices as will reflect the aforesaid factors, insure a sufficient quantity of pure and wholesome milk, and be in the public interest; and

(3) The Southeast order regulates the handling of milk in the same manner as, and is applicable only to persons in the respective classes of industrial or commercial activity specified in, marketing agreements upon which a hearing has been held;

(4) All milk and milk products handled by handlers, as defined in the Southeast order, are in the current of interstate commerce or directly burden, obstruct, or affect interstate commerce in milk or its products; and

(5) It is hereby found that the necessary expense of the market administrator for the maintenance and functioning of such agency will require each handler to pay, as its pro rata share of such expense, 5 cents per hundredweight or such lesser amount as the Secretary may prescribe, with respect to milk specified in § 1007.85.

(b) *Determinations.* It is hereby determined that:

(1) The refusal or failure of handlers (excluding cooperative associations specified in section 8c(9) of the Act) of more than 50 percent of the milk marketed within the Southeast marketing area to sign a proposed marketing agreement tends to prevent the effectuation of the declared policy of the Act;

(2) The issuance of this order is the only practical means pursuant to the declared policy of the Act of advancing the interests of producers as defined in the order; and

(3) The issuance of this order was approved by at least two-thirds of the producers who during the representative period of March 1995 were engaged in the production of milk for sale in the marketing area.

List of Subjects in 7 CFR Part 1007

Milk marketing orders.

Order Relative to Handling

It is therefore ordered that on and after the effective date hereof, the handling of milk in the Georgia, Alabama-West Florida, New Orleans-Mississippi, Greater Louisiana, and Central Arkansas marketing areas (parts 1007, 1093, 1094, 1096, and 1108, respectively) shall be amended and merged into one order. Parts 1093, 1094, 1096, and 1108 are vacated and reserved for future assignment. The handling of milk in the Southeast marketing area shall be in conformity to and in compliance with the following terms and conditions:

1. Part 1007 is revised to read as follows:

PART 1007—MILK IN THE SOUTHEAST MARKETING AREA

Subpart—Order Regulating Handling

General Provisions

Sec.
1007.1 General provisions.

Definitions

1007.2 Southeast marketing area.
1007.3 Route disposition.
1007.4 Plant.
1007.5 Distributing plant.
1007.6 Supply plant.
1007.7 Pool plant.
1007.8 Nonpool plant.
1007.9 Handler.
1007.10 Producer-handler.
1007.11 [Reserved]
1007.12 Producer.
1007.13 Producer milk.
1007.14 Other source milk.
1007.15 Fluid milk product.
1007.16 Fluid cream product.
1007.17 Filled milk.
1007.18 Cooperative association.
1007.19 Commercial food processing establishment.

Handler Reports

1007.30 Reports of receipts and utilization.
1007.31 Payroll reports.
1007.32 Other reports.

Classification of Milk

1007.40 Classes of utilization.
1007.41 Shrinkage.
1007.42 Classification of transfers and diversions.
1007.43 General classification rules.
1007.44 Classification of producer milk.
1007.45 Market administrator's reports and announcements concerning classification.

Class Prices

1007.50 Class prices.
1007.51 Basic formula price.
1007.52 Plant location adjustments for handlers.
1007.53 Announcement of class prices.
1007.54 Equivalent price.

Uniform Prices

1007.60 Handler's value of milk for computing the uniform price.
1007.61 Computation of uniform price (including weighted average price and uniform prices for base and excess milk).
1007.62 Announcement of uniform prices and butterfat differential.

Payments for Milk

1007.70 Producer-settlement fund.
1007.71 Payments to the producer-settlement fund.
1007.72 Payments from the producer-settlement fund.
1007.73 Payments to producers and to cooperative associations.
1007.74 Butterfat differential.
1007.75 Plant location adjustments for producers and on nonpool milk.
1007.76 Payments by a handler operating a partially regulated distributing plant.
1007.77 Adjustment of accounts.
1007.78 Charges on overdue accounts.

Administrative Assessment and Marketing Service Deduction

1007.85 Assessment for order administration.
1007.86 Deduction for marketing services.

Base-Excess Plan

1007.90 Base milk.
1007.91 Excess milk.
1007.92 Computation of base for each producer.
1007.93 Base rules.
1007.94 Announcement of established bases.

Authority: 7 U.S.C. 601–674.

Subpart—Order Regulating Handling

General Provisions

§ 1007.1 General provisions.

The terms, definitions, and provisions in part 1000 of this chapter apply to and are hereby made a part of this order.

Definitions

§ 1007.2 Southeast marketing area.

The *Southeast marketing area*, hereinafter called the *marketing area*, means all territory within the bounds of the following Alabama, Florida, Georgia, Mississippi, Tennessee, and Arkansas counties and Louisiana parishes, including all piers, docks, and wharves connected therewith and all craft moored thereat, and all territory occupied by government (municipal, State, or Federal) reservations, installations, institutions, or other similar establishments if any part thereof is within any of the listed counties or parishes:

Zone 1

Arkansas Counties

Baxter, Clay, Fulton, Greene, Izard, Lawrence, Randolph, and Sharp.

Tennessee Counties

Cheatham, Clay, Davidson, Dickson, Fentress, Henry, Houston, Jackson, Lake, Macon, Montgomery, Obion, Overton, Pickett, Robertson, Smith, Stewart, Sumner, Trousdale, Weakley, and Wilson.

Zone 2

Arkansas Counties

Newton, Searcy, and Stone.

Tennessee Counties

Bedford, Benton, Bledsoe, Cannon, Carroll, Chester, Coffee, Crockett, DeKalb, Decatur, Dyer, Gibson, Grundy, Henderson, Hickman, Humphreys, Lewis, Madison, Marshall, Maury, Perry, Putnam, Rutherford, Van Buren, Warren, White, and Williamson.

Zone 3

Arkansas Counties

Cleburne, Craighead, Independence, Jackson, Johnson, Mississippi, Poinsett, Pope, and Van Buren.

Tennessee Counties

Lauderdale, Tipton, and Haywood.

Zone 4

Arkansas Counties

Conway, Crittenden, Cross, Faulkner, Garland, Lee, Lonoke, Monroe, Montgomery, Perry, Polk, Prairie, Pulaski, Saline, St. Francis, White, Woodruff, and Yell.

Tennessee Counties

Fayette, Franklin, Giles, Hardeman, Hardin, Lawrence, Lincoln, McNairy, Moore, Shelby, and Wayne.

Zone 5

Alabama Counties

Colbert, De Kalb, Franklin, Jackson, Lauderdale, Lawrence, Limestone, Madison, Marshall, and Morgan.

Arkansas Counties

Arkansas, Clark, Grant, Hot Spring, Howard, Jefferson, Phillips, Pike, and Sevier.

Georgia Counties

Gilmer, Towns, and Union.

Mississippi Counties

Alcorn, Benton, Coahoma, DeSoto, Itawamba, Lafayette, Lee, Marshall, Panola, Pontotoc, Prentiss, Quitman, Tate, Tippah, Tishomingo, Tunica, and Union.

Zone 6

Alabama Counties

Blount, Cherokee, Cullman, Etowah, Fayette, Lamar, Marion, Walker, and Winston.

Arkansas Counties

Bradley, Calhoun, Cleveland, Dallas, Desha, Drew, Hempstead, Lincoln, Little River, Nevada, and Ouachita.

Georgia Counties

Bartow, Cherokee, Dawson, Floyd, Gordon, Habersham, Lumpkin, Pickens, Rabun, and White.

Mississippi Counties

Bolivar, Calhoun, Chickasaw, Grenada, Monroe, Sunflower, Tallahatchie, and Yalobusha.

Zone 7

Alabama Counties

Bibb, Calhoun, Clay, Cleburne, Jefferson, Pickens, Randolph, Shelby, St. Clair, Talladega, and Tuscaloosa.

Arkansas Counties

Ashley, Chicot, Columbia, Lafayette, Miller, and Union.

Georgia Counties

Banks, Barrow, Butts, Carroll, Clarke, Clayton, Cobb, Coweta, De Kalb, Douglas, Elbert, Fayette, Forsyth, Franklin, Fulton, Greene, Gwinnett, Hall, Haralson, Hart, Heard, Henry, Jackson, Jasper, Lincoln, Madison, Morgan, Newton, Oconee, Oglethorpe, Paulding, Polk, Putnam, Rockdale, Spalding, Stephens, Taliaferro, Walton, and Wilkes.

Mississippi Counties

Attala, Carroll, Choctaw, Clay, Holmes, Humphreys, Leflore, Lowndes, Montgomery, Noxubee, Oktibbeha, Washington, Webster, and Winston.

Zone 8

Alabama Counties

Chambers, Chilton, Coosa, Greene, Hale, Lee, Perry, Sumter (north of U.S. 80), and Tallapoosa.

Georgia Counties

Baldwin, Bibb, Burke, Columbia, Crawford, Glascock, Hancock, Harris, Jefferson, Jones, Lamar, McDuffie, Meriwether, Monroe, Muscogee, Pike, Richmond, Talbot, Taylor, Troup, Twiggs, Upson, Warren, Washington, and Wilkinson.

Louisiana Parishes

Bienville, Bossier, Caddo, Claiborne, East Carroll, Jackson, Lincoln, Morehouse, Ouachita, Richland, Union, Webster, and West Carroll.

Mississippi Counties

Issaquena, Kemper, Leake, Madison, Neshoba, Sharkey, and Yazoo.

Zone 9

Alabama Counties

Autauga, Bullock, Dallas, Elmore, Lowndes, Macon, Marengo, Montgomery, Russell, Sumter (south of U.S. 80), and Wilcox.

Georgia Counties

Bleckley, Bulloch, Candler, Chattahoochee, Crisp, Dodge, Dooly, Effingham, Emanuel, Evans, Houston, Jenkins, Johnson, Laurens, Macon, Marion, Montgomery, Peach, Pulaski, Schley, Screven, Stewart, Sumter, Tattnall, Telfair, Toombs, Treutlen, Webster, Wheeler, and Wilcox.

Louisiana Parishes

Caldwell, De Soto, Franklin, Madison, Natchitoches (north of State Highway 6 and U.S. 84), Red River, Tensas, and Winn.

Mississippi Counties

Claiborne, Clarke, Copiah, Hinds, Jasper, Lauderdale, Newton, Rankin, Scott, Simpson, Smith, and Warren.

Zone 10

Alabama Counties

Barbour, Butler, Choctaw, Clarke, Coffee, Conecuh, Covington, Crenshaw, Dale, Escambia, Geneva, Henry, Houston, Monroe, Pike, and Washington.

Georgia Counties

Appling, Atkinson, Bacon, Baker, Ben Hill, Berrien, Brantley, Brooks, Bryan, Calhoun, Camden, Charlton, Chatham, Clay, Clinch, Coffee, Colquitt, Cook, Decatur, Dougherty, Early, Echols, Glynn, Grady, Irwin, Jeff Davis, Lanier, Lee, Liberty, Long, Lowndes, McIntosh, Miller, Mitchell, Pierce, Quitman, Randolph, Seminole, Terrell, Thomas, Tift, Turner, Ware, Wayne, and Worth.

Louisiana Parishes

Avoyelles, Catahoula, Concordia, Grant, La Salle, Natchitoches (south of State Highway 6 and U.S. 84), Rapides, Sabine, and Vernon.

Mississippi Counties

Adams, Amite, Covington, Forrest, Franklin, Greene, Jefferson, Jefferson Davis, Jones, Lamar, Lawrence, Lincoln, Marion, Perry, Pike, Walthall, Wayne, and Wilkinson.

Zone 11

Alabama Counties

Baldwin and Mobile (more than 20 miles from the Mobile city hall).

Florida Counties

Escambia, Okaloosa, Santa Rosa, and Walton.

Louisiana Parishes

Allen, Beauregard, East Feliciana, Evangeline, Pointe Coupee, St. Helena, St. Landry, St. Tammany, Tangipahoa, Washington, and West Feliciana.

Mississippi Counties

George, Hancock, Harrison, Jackson, Pearl River, and Stone.

Zone 12

Alabama Counties

Mobile (within 20 miles of the Mobile city hall).

Louisiana Parishes

Acadia, Ascension, Assumption, Calcasieu, Cameron, East Baton Rouge, Iberia, Iberville, Jefferson, Jefferson Davis, Lafayette, Lafourche, Livingston, Orleans, Plaquemines, St. Bernard, St. Charles, St. James, St. John the Baptist, St. Martin, St. Mary, Terrebonne, Vermilion, and West Baton Rouge.

§ 1007.3 Route disposition.

Route disposition means a delivery to a retail or wholesale outlet (except a plant), either directly or through any distribution facility (including disposition from a plant store, vendor or vending machine) of a fluid milk product classified as Class I milk. Packaged fluid milk products that are transferred to a distributing plant from a plant with route disposition in the marketing area and which are classified as Class I under § 1007.40(a) shall be considered as route disposition from the transferor plant, rather than the transferee plant, for the single purpose of qualifying it as a pool plant under § 1007.7(a).

§ 1007.4 Plant.

Plant means the land, buildings, facilities, and equipment constituting a single operating unit or establishment at which milk or milk products, including filled milk, are received, processed, or packaged. Separate facilities without stationary storage tanks that are used only as a reload point for transferring bulk milk from one tank truck to another or separate facilities used only as a distribution point for storing packaged fluid milk products in transit for route disposition shall not be a plant under this definition.

§ 1007.5 Distributing plant.

Distributing plant means a plant that is approved by a duly constituted regulatory agency for the handling of Grade A milk and at which fluid milk products are processed or packaged and from which there is route disposition in the marketing area during the month.

§ 1007.6 Supply plant.

Supply plant means a plant that is approved by a duly constituted regulatory agency for the handling of Grade A milk and from which fluid milk products are transferred during the month to a pool distributing plant.

§ 1007.7 Pool plant.

Pool plant means a plant specified in paragraphs (a), (b), (c) or (d) of this section, or a unit of plants as specified in paragraph (e) of this section, but excluding a plant specified in paragraph (g) of this section. The pooling standards described in paragraphs (a) through (c) of this section are subject to modification pursuant to paragraph (f) of this section:

(a) A distributing plant from which during the month:

(1) Total route disposition, except filled milk, is equal to 50 percent or more of the total quantity of Grade A fluid milk products, except filled milk, physically received at such plant or diverted therefrom pursuant to § 1007.13; and

(2) Route disposition, except filled milk, in the marketing area is at least the lesser of a daily average of 1,500 pounds or 10 percent of the total quantity of fluid milk products, except filled milk, physically received or diverted therefrom pursuant to § 1007.13.

(b) A supply plant from which during each of the months of July through November 60 percent (40 percent during each of the months of December through June) of the total quantity of Grade A milk that is received during the month from dairy farmers (including producer milk diverted from the plant pursuant to § 1007.13 but excluding milk diverted to such plant) and handlers described in § 1007.9(c) is transferred to pool distributing plants.

(c) A plant located within the Southeast marketing area that is operated by a cooperative association if pool plant status under this paragraph is requested for such plant by the cooperative association and during the month producer milk of members of such cooperative association is delivered directly from farms to pool distributing plants or is transferred to such plants as a fluid milk product from the cooperative's plant. Such deliveries, in excess of receipts by transfer from pool distributing plants, must equal not less than 60 percent of the total producer milk of such cooperative association in each of the months of July through November, and 40 percent of such milk in each of the months of December through June. The plant's pool plant status shall be subject to the following conditions:

(1) The plant does not qualify as a pool plant under paragraphs (a) or (b) of this section or under the provisions of another Federal order applicable to a distributing plant or a supply plant; and

(2) The plant is approved by a duly constituted regulatory agency to handle Grade A milk.

(d) A plant located within the marketing area (other than a producer-handler plant or a governmental agency plant) that meets the qualifications described in paragraph (a) of this section regardless of its quantity of route disposition in any other Federal order marketing area.

(e) Two or more plants operated by the same handler and that are located within the Southeast marketing area may qualify for pool status as a unit by meeting the total and in-area route disposition requirements specified in paragraph (a) of this section and the following additional requirements:

(1) At least one of the plants in the unit must qualify as a pool plant pursuant to paragraph (a) of this section;

(2) Other plants in the unit must process only Class I or Class II products and must be located in a pricing zone providing the same or a lower Class I price than the price applicable at the distributing plant included in the unit pursuant to paragraph (e)(1) of this section; and

(3) A written request to form a unit, or to add or remove plants from a unit, must be filed with the market administrator prior to the first day of the month for which it is to be effective.

(f) The applicable percentages in paragraphs (a) through (c) of this section may be increased or decreased up to 10 percentage points by the market administrator if, following a written request for such a revision, the market administrator finds that such revision is necessary to assure orderly marketing and efficient handling of milk in the marketing area. Before making such a finding, the market administrator shall investigate the need for the revision by conducting an investigation and conferring with the Director of the Dairy Division. If the investigation shows that a revision might be appropriate, the market administrator shall issue a notice stating that the revision is being considered and inviting written data, views, and arguments. Any decision to revise an applicable percentage must be issued in writing seven days before the effective date.

(g) The term *pool plant* shall not apply to the following plants:

(1) A *producer-handler* plant;

(2) An *exempt plant* as defined in § 1007.8(e);

(3) A plant qualified pursuant to paragraph (a) of this section which is not located within the Southeast marketing area, meets the pooling requirements of another Federal order, and has had greater sales in such other Federal order marketing area for three consecutive months, including the current month;

(4) A plant qualified pursuant to paragraph (a) of this section which is located in another order's marketing area and which is required to be regulated under such other order because of its location within the other order's marketing area; and

(5) A plant qualified pursuant to paragraph (b) of this section which also meets the pooling requirements of another Federal order and from which greater qualifying shipments are made to plants regulated under such other order than are made to plants regulated under this part, or such plant has automatic pooling status under such other order.

§ 1007.8 Nonpool plant.

Nonpool plant means any milk or filled milk receiving, manufacturing, or processing plant other than a pool plant. The following categories of nonpool plants are further defined as follows:

(a) *Other order plant* means a plant that is fully subject to the pricing and pooling provisions of another order issued pursuant to the Act.

(b) *Producer-handler plant* means a plant operated by a producer-handler as defined in any order (including this part) issued pursuant to the Act.

(c) *Partially regulated distributing plant* means a nonpool plant that is not an other order plant, a producer-handler plant, or an exempt plant, from which there is route disposition in consumer-type packages or dispenser units in the marketing area during the month.

(d) *Unregulated supply plant* means a supply plant that does not qualify as a pool supply plant and is not an other order plant, a producer-handler plant, or an exempt plant.

(e) *Exempt plant* means a plant:

(1) Operated by a governmental agency from which fluid milk products are distributed in the marketing area. Such plant shall be exempt from all provisions of this part; or

(2) Which has monthly route disposition of 100,000 pounds or less during the month. Such plant will be exempt from the pricing and pooling provisions of this order, but the handler will be required to file periodic reports as prescribed by the market administrator to enable determination of the exempt status of such handler.

§ 1007.9 Handler.

Handler means:

(a) Any person who operates one or more pool plants;

(b) Any cooperative with respect to producer milk which it causes to be diverted pursuant to § 1007.13 for the account of such cooperative association;

(c) Any cooperative association with respect to milk that it receives for its account from the farm of a producer for delivery to a pool plant of another handler in a tank truck owned and operated by, or under the control of, such cooperative association, unless both the cooperative association and the operator of the pool plant notify the market administrator prior to the time that such milk is delivered to the pool plant that the plant operator will be the handler of such milk and will purchase such milk on the basis of weights determined from its measurement at the farm and butterfat tests determined from farm bulk tank samples. Milk for which the cooperative association is the handler pursuant to this paragraph shall

be deemed to have been received by the cooperative association at the location of the pool plant to which such milk is delivered;

(d) Any person who operates a partially regulated distributing plant;

(e) A producer-handler;

(f) Any person who operates an other order plant described in § 1007.8(a);

(g) Any person who operates an unregulated supply plant; and

(h) Any person who operates an exempt plant.

§ 1007.10 Producer-handler.

Producer-handler means a person who:

(a) Operates a dairy farm and a distributing plant from which there is monthly route disposition in excess of 100,000 pounds per month;

(b) Receives no Class I milk from sources other than his/her own farm production and pool plants;

(c) Disposes of no other source milk as Class I milk; and

(d) Provides proof satisfactory to the market administrator that the care and management of the dairy animals and other resources necessary to produce all Class I milk handled (excluding receipts from pool plants) and the operation of the processing and packaging business are his/her personal enterprise and personal risk.

§ 1007.11 [Reserved]

§ 1007.12 Producer.

(a) Except as provided in paragraph (b) of this section, *producer* means any person who produces milk approved by a duly constituted regulatory agency for fluid consumption as Grade A milk and whose milk is:

(1) Received at a pool plant directly from such producer;

(2) Received by a handler described in § 1007.9(c); or

(3) Diverted from a pool plant in accordance with § 1007.13.

(b) *Producer* shall not include:

(1) A producer-handler as defined in any order (including this part) issued pursuant to the Act;

(2) Any person with respect to milk produced by such person whose milk is delivered to an exempt plant, excluding producer milk diverted to such exempt plant pursuant to § 1007.13;

(3) Any person with respect to milk produced by such person which is diverted to a pool plant from an other order plant if the other order plant designates such person as a producer under that order and such milk is allocated to Class II or Class III utilization pursuant to § 1007.44(a)(8)(iii) and the corresponding step of § 1007.44(b); or

(4) Any person with respect to milk produced by such person which is reported as diverted to an other order plant if any portion of such person's milk so moved is assigned to Class I under the provisions of such other order.

§ 1007.13 Producer milk.

Producer milk means the skim milk and butterfat contained in milk of a producer that is:

(a) Received at a pool plant directly from such producer by the operator of the plant;

(b) Received by a handler described in § 1007.9(c);

(c) Diverted from a pool plant to the pool plant of another handler. Milk so diverted shall be deemed to have been received at the location of the plant to which diverted; or

(d) Diverted by the operator of a pool plant or cooperative association to a nonpool plant that is not a producer-handler plant, subject to the following conditions:

(1) In any month of December through June, not less than four days' production of the producer whose milk is diverted is physically received at a pool plant during the month;

(2) In any month of July through November, not less than ten days' production of the producer whose milk is diverted is physically received at a pool plant during the month;

(3) The total quantity of milk so diverted during the month by a cooperative association shall not exceed 33 percent during the months of July through November, or 50 percent during the months of December through June, of the producer milk that the cooperative association caused to be delivered to, and physically received at, pool plants during the month;

(4) The operator of a pool plant that is not a cooperative association may divert any milk that is not under the control of a cooperative association that diverts milk during the month pursuant to paragraph (d) of this section. The total quantity of milk so diverted during the month shall not exceed 33 percent during the months of July through November, or 50 percent during the months of December through June, of the producer milk physically received at such plant (or such unit of plants in the case of plants that pool as a unit pursuant to § 1007.7(d)) during the month;

(5) Any milk diverted in excess of the limits prescribed in paragraphs (d)(3) and (4) of this section shall not be producer milk. The diverting handler shall designate the dairy farmer deliveries that will not be producer milk pursuant to paragraphs (d)(3) and (4) of this section. If the handler fails to make such designation, no milk diverted by such handler shall be producer milk;

(6) To the extent that it would result in nonpool status for the plant from which diverted, milk diverted for the account of a cooperative association from the pool plant of another handler shall not be producer milk;

(7) The cooperative association shall designate the dairy farm deliveries that are not producer milk pursuant to paragraph (d)(6) of this section. If the cooperative association fails to make such designation, no milk diverted by it to a nonpool plant shall be producer milk;

(8) Diverted milk shall be priced at the location of the plant to which diverted; and

(9) The market administrator may increase or decrease the applicable percentages in paragraphs (d) (3) and (4) of this section by up to 10 percentage points, and may increase or decrease the 10-day and 4-day delivery requirements in paragraphs (d) (1) and (2) of this section by 50 percent if, following a written request for such a revision, the market administrator finds that such revision is necessary to assure orderly marketing and efficient handling of milk in the marketing area. Before making such a finding, the market administrator shall investigate the need for the revision by conducting an investigation and conferring with the Director of the Dairy Division. If the investigation shows that a revision might be appropriate, the market administrator shall issue a notice stating that the revision is being considered and inviting written data, views, and arguments. Any decision to revise an applicable percentage must be issued in writing seven days before the effective date.

§ 1007.14 Other source milk.

Other source milk means all skim milk and butterfat contained in or represented by:

(a) Receipts of fluid milk products and bulk products specified in § 1007.40(b)(1) from any source other than producers, a handler described in § 1007.9(c), or pool plants;

(b) Receipts in packaged form from other plants of products specified in § 1007.40(b)(1);

(c) Products (other than fluid milk products, products specified in § 1007.40(b)(1), and products produced at the plant during the same month) from any source which are reprocessed, converted into, or combined with another product in the plant during the month; and

(d) Receipts of any milk product (other than a fluid milk product or a product specified in § 1007.40(b)(1)) for which the handler fails to establish a disposition.

§ 1007.15 Fluid milk product.

(a) Except as provided in paragraph (b) of this section, *fluid milk product* means any milk products in fluid or frozen form containing less than 9 percent butterfat, that are in bulk or are packaged, distributed and intended to be used as beverages. Such products include, but are not limited to: Milk, skim milk, lowfat milk, milk drinks, buttermilk, and filled milk, including any such beverage products that are flavored, cultured, modified with added nonfat milk solids, sterilized, concentrated (to not more than 50 percent total milk solids), or reconstituted.

(b) The term *fluid milk product* shall not include:

(1) Plain or sweetened evaporated milk, plain or sweetened evaporated skim milk, sweetened condensed milk or skim milk, formulas especially prepared for infant feeding or dietary use that are packaged in hermetically sealed containers, any product that contains by weight less than 6.5 percent nonfat milk solids, and whey; and

(2) The quantity of skim milk in any modified product specified in paragraph (a) of this section that is in excess of the quantity of skim milk in an equal volume of an unmodified product of the same nature and butterfat content.

§ 1007.16 Fluid cream product.

Fluid cream product means cream (other than plastic cream or frozen cream), including sterilized cream, or a mixture of cream and milk or skim milk containing 9 percent or more butterfat, with or without the addition of other ingredients.

§ 1007.17 Filled milk.

Filled milk means any combination of nonmilk fat (or oil) with skim milk (whether fresh, cultured, reconstituted, or modified by the addition of nonfat milk solids), with or without milkfat, so that the product (including stabilizers, emulsifiers, or flavoring) resembles milk or any other fluid milk product, and contains less than 6 percent nonmilk fat (or oil).

§ 1007.18 Cooperative association.

Cooperative association means any cooperative marketing association of producers which the Secretary determines after application by the association:

(a) To be qualified under the provisions of the Act of Congress of February 18, 1922, as amended, known as the ''Capper-Volstead Act;'' and

(b) To have full authority in the sale of milk of its members and be engaged in making collective sales of, or marketing, milk or milk products for its members.

§ 1007.19 Commercial food processing establishment.

Commercial food processing establishment means any facility, other than a milk or filled milk plant, to which bulk fluid milk products and bulk fluid cream products are disposed of, or producer milk is diverted, that uses such receipts as ingredients in food products, and has no disposition of fluid milk products or fluid cream products other than those that it received in consumer type packages. Producer milk diverted to commercial food processing establishments shall be subject to the same provisions relating to diversions to plants, including, but not limited to, provisions in §§ 1007.13, 1007.41, and 1007.52.

Handler Reports

§ 1007.30 Reports of receipts and utilization.

On or before the 5th day after the end of the month (if postmarked), or not later than the 7th day if the report is delivered in person to the office of the market administrator, each handler shall report for such month to the market administrator, in the detail and on forms prescribed by the market administrator, as follows:

(a) Each handler, with respect to each of its pool plants, shall report the quantities of skim milk and butterfat contained in or represented by:

(1) Receipts of producer milk, including producer milk diverted by the handler from the pool plant to other plants;

(2) Receipts of milk from handlers described in § 1007.9(c);

(3) Receipts of fluid milk products and bulk fluid cream products from other pool plants;

(4) Receipts of other source milk;

(5) Inventories at the beginning and end of the month of fluid milk products and products specified in § 1007.40(b)(1); and

(6) The utilization or disposition of all milk, filled milk, and milk products required to be reported pursuant to this paragraph.

(b) Each handler operating a partially regulated distributing plant shall report with respect to such plant in the same manner as prescribed for reports required by paragraph (a) of this section. Receipts of milk that would have been producer milk if the plant had been fully regulated shall be reported in lieu of producer milk. Such report shall show also the quantity of any reconstituted skim milk in route disposition in the marketing area.

(c) Each handler described in § 1007.9(b) and (c) shall report:

(1) The quantities of skim milk and butterfat contained in receipts from producers; and

(2) The utilization or disposition of all such receipts.

(d) Each handler not specified in paragraphs (a) through (c) of this section shall report with respect to its receipts and utilization of milk, filled milk, and milk products in such manner as the market administrator may prescribe.

§ 1007.31 Payroll reports.

(a) On or before the 20th day after the end of each month, each handler described in § 1007.9(a), (b), and (c) shall report to the market administrator its producer payroll for such month, in detail prescribed by the market administrator, showing for each producer:

(1) Such producer's name and address;

(2) The total pounds of milk received from such producer, showing separately the pounds of milk received from the producer on each delivery day;

(3) The average butterfat content of such milk; and

(4) The price per hundredweight, the gross amount due, the amount and nature of any deduction, and the net amount paid.

(b) Each handler operating a partially regulated distributing plant who elects to make payment pursuant to § 1007.76(b) shall report for each dairy farmer who would have been a producer if the plant had been fully regulated in the same manner as prescribed for reports required by paragraph (a) of this section.

§ 1007.32 Other reports.

(a) Each handler described in § 1007.9(a), (b), and (c) shall report to the market administrator on or before the 7th day after the end of each month of February through May the aggregate quantity of base milk received from producers during the month, and on or before the 20th day after the end of each month of February through May the pounds of base milk received from each producer during the month. In the case of milk diverted to another plant, the handler shall also report the pounds of base milk of each producer assigned to the divertee plant.

(b) In addition to the reports required pursuant to paragraph (a) of this section and §§ 1007.30 and 1007.31, each

handler shall report such information as the market administrator deems necessary to verify or establish each handler's obligation under the order.

Classification of Milk

§ 1007.40 Classes of utilization.

Except as provided in § 1007.42, all skim milk and butterfat required to be reported pursuant to § 1007.30 shall be classified as follows:

(a) *Class I milk* shall be all skim milk and butterfat:

(1) Disposed of in the form of a fluid milk product, except as otherwise provided in paragraphs (b) and (c) of this section;

(2) In packaged fluid milk products in inventory at the end of the month; and

(3) Not specifically accounted for as Class II or Class III milk.

(b) *Class II milk* shall be all skim milk and butterfat:

(1) Disposed in the form of a fluid cream product or any product containing artificial fat, fat substitutes, or 6 percent or more nonmilk fat (or oil) that resembles a fluid cream product, except as otherwise provided in paragraph (c) of this section;

(2) In packaged inventory at the end of the month of the products specified in paragraph (b)(1) of this section and in bulk concentrated fluid milk products in inventory at the end of the month;

(3) In bulk fluid milk products and bulk fluid cream products disposed of or diverted to a commercial food processing establishment if the market administrator is permitted to audit the records of the commercial food processing establishment for the purpose of verification. Otherwise, such uses shall be Class I;

(4) Used to produce:

(i) Cottage cheese, lowfat cottage cheese, dry curd cottage cheese, ricotta cheese, pot cheese, Creole cheese, and any similar soft, high-moisture cheese resembling cottage cheese in form or use;

(ii) Milkshake and ice milk mixes (or bases), frozen desserts, and frozen dessert mixes distributed in one-quart containers or larger and intended to be used in soft or semi-solid form;

(iii) Aerated cream, frozen cream, sour cream, sour half-and-half, sour cream mixtures containing nonmilk items, yogurt, and any other semi-solid product resembling a Class II product;

(iv) Eggnog, custards, puddings, pancake mixes, buttermilk biscuit mixes, coatings, batter, and similar products;

(v) Formulas especially prepared for infant feeding or dietary use (meal replacement) that are packaged in hermetically sealed containers;

(vi) Candy, soup, bakery products and other prepared foods which are processed for general distribution to the public, and intermediate products, including sweetened condensed milk, to be used in processing such prepared food products; and

(vii) Any product not otherwise specified in this section.

(c) *Class III milk* shall be all skim milk and butterfat:

(1) Used to produce:

(i) Cream cheese and other spreadable cheeses, and hard cheese of types that may be shredded, grated, or crumbled, and are not included in paragraph (b)(4)(i) of this section;

(ii) Butter, plastic cream, anhydrous milkfat, and butteroil;

(iii) Any milk product in dry form except nonfat dry milk;

(iv) Evaporated or sweetened condensed milk in a consumer-type package and evaporated or sweetened condensed skim milk in a consumer-type package; and

(2) In inventory at the end of the month of unconcentrated fluid milk products in bulk form and products specified in paragraph (b)(1) of this section in bulk form;

(3) In fluid milk products, products specified in paragraph (b)(1) of this section, and products processed by the disposing handler that are specified in paragraphs (b)(4)(i) through (iv) of this section, that are disposed of by a handler for animal feed;

(4) In fluid milk products, products specified in paragraph (b)(1) of this section, and products processed by the disposing handler that are specified in paragraphs (b)(4) (i) through (iv) of this section, that are dumped by a handler. The market administrator may require notification by the handler of such dumping in advance for the purpose of having the opportunity to verify such disposition. In any case, classification under this paragraph requires a handler to maintain adequate records of such use. If advance notification of such dumping is not possible, or if the market administrator so requires, the handler must notify the market administrator on the next business day following such use;

(5) In fluid milk products and products specified in paragraph (b)(1) of this section that are destroyed or lost by a handler in a vehicular accident, flood, fire, or in a similar occurrence beyond the handler's control, to the extent that the quantities destroyed or lost can be verified from records satisfactory to the market administrator;

(6) In skim milk in any modified fluid milk product or in any product specified in paragraph (b)(1) of this section that is in excess of the quantity of skim milk in such product that was included within the fluid milk product definition pursuant to § 1007.15 and the fluid cream product definition pursuant to § 1007.16; and

(7) In shrinkage assigned pursuant to § 1007.41(a) to the receipts specified in § 1007.41(a)(2) and in shrinkage specified in § 1007.41 (b) and (c).

(d) *Class III–A* milk shall be all skim milk and butterfat used to produce nonfat dry milk.

§ 1007.41 Shrinkage.

For the purposes of classifying all skim milk and butterfat to be reported by a handler pursuant to § 1007.30, the market administrator shall determine the following:

(a) The pro rata assignment of shrinkage of skim milk and butterfat, respectively, at each pool plant to the respective quantities of skim milk and butterfat:

(1) In the receipts specified in paragraphs (b) (1) through (6) of this section on which shrinkage is allowed pursuant to such paragraph; and

(2) In other source milk not specified in paragraphs (b) (1) through (6) of this section which was received in the form of a bulk fluid milk product or a bulk fluid cream product;

(b) The shrinkage of skim milk and butterfat, respectively, assigned pursuant to paragraph (a) of this section to the receipts specified in paragraph (a)(1) of this section that is not in excess of:

(1) Two percent of the skim milk and butterfat, respectively, in producer milk (excluding milk diverted by the plant operator to another plant);

(2) Plus 1.5 percent of the skim milk and butterfat, respectively, in milk received from a handler described in § 1007.9(c), except that if the operator of the plant to which the milk is delivered purchased such milk on the basis of weights determined from its measurement at the farm and butterfat tests determined from farm bulk tank samples, the applicable percentage shall be 2 percent;

(3) Plus 0.5 percent of the skim milk and butterfat, respectively, in producer milk diverted from such plant by the plant operator to another plant, except that if the operator of the plant to which the milk is delivered purchased such milk on the basis of weights determined from its measurement at the farm and butterfat tests determined from farm bulk tank samples, the applicable percentage shall be zero;

(4) Plus 1.5 percent of the skim milk and butterfat, respectively, in bulk fluid

milk products received by transfer from other pool plants;

(5) Plus 1.5 percent of the skim milk and butterfat, respectively, in bulk fluid milk products received by transfer from other order plants, excluding the quantity for which Class II or Class III classification is requested by the handler; and

(6) Plus 1.5 percent of the skim milk and butterfat, respectively, in bulk fluid milk products received by transfer from unregulated supply plants, excluding the quantity for which Class II or Class III classification is requested by the handler; and

(7) Less 1.5 percent of the skim milk and butterfat, respectively, in bulk fluid milk products transferred to other plants that is not in excess of the respective amount of skim milk and butterfat to which percentages are applied in paragraphs (b) (1), (2), (4), (5), and (6) of this section; and

(c) The quantity of skim milk and butterfat, respectively, in shrinkage of milk from producers for which a cooperative association is the handler pursuant to § 1007.9 (b) or (c), but not in excess of 0.5 percent of the skim milk and butterfat, respectively, in such milk. If the operator of the plant to which the milk is delivered purchases such milk on the basis of weights determined from its measurement at the farm and butterfat tests determined from farm bulk tank samples, the applicable percentage under this paragraph for the cooperative association shall be zero.

§ 1007.42 Classification of transfers and diversions.

(a) *Transfers and diversions to pool plants.* Skim milk or butterfat transferred or diverted in the form of a fluid milk product or transferred in the form of a bulk fluid cream product from a pool plant to another pool plant shall be classified as Class I milk unless the operators of both plants request the same classification in another class. In either case, the classification shall be subject to the following conditions:

(1) The skim milk or butterfat classified in each class shall be limited to the amount of skim milk and butterfat, respectively, remaining in such class at the transferee-plant after the computations pursuant to § 1007.44(a)(12) and the corresponding step of § 1007.44(b). The amount of skim milk or butterfat classified in each class shall include the assigned utilization of skim milk or butterfat in transfers of concentrated fluid milk products.

(2) If the transferor-plant received during the month other source milk to be allocated pursuant to § 1007.44(a)(7) or the corresponding step of § 1007.44(b), the skim milk or butterfat so transferred shall be classified so as to allocate the least possible Class I utilization to such other source milk; and

(3) If the transferor-plant received during the month other source milk to be allocated pursuant to § 1007.44(a) (11) or (12) or the corresponding steps of § 1007.44(b), the skim milk or butterfat so transferred, up to the total of the skim milk and butterfat, respectively, in such receipts of other source milk, shall not be classified as Class I milk to a greater extent than would be the case if the other source milk had been received at the transferee-plant.

(b) *Transfers and diversions to other order plants.* Skim milk or butterfat transferred or diverted in the form of a fluid milk product or transferred in the form of a bulk fluid cream product from a pool plant to an other order plant shall be classified in the following manner. Such classification shall apply only to the skim milk or butterfat that is in excess of any receipts at the pool plant from the other plant of skim milk and butterfat, respectively, in fluid milk products and bulk fluid cream products, respectively, that are in the same category as described in paragraph (b) (1), (2), or (3) of this section.

(1) If transferred as packaged fluid milk products, classification shall be in the classes to which allocated as a fluid milk product under the other order;

(2) If transferred in bulk form, classification shall be in the classes to which allocated under the other order (including allocation under the conditions set forth in paragraph (b)(3) of this section);

(3) If the operators of both plants so request in their reports of receipts and utilization filed with their respective market administrators, transfers or diversions in bulk form shall be classified as Class II or Class III milk to the extent of such utilization available for such classification pursuant to the allocation provisions of the other order;

(4) If information concerning the classes to which such transfers or diversions were allocated under the other order is not available to the market administrator for the purpose of establishing classification under this paragraph, classification shall be Class I subject to adjustment when such information is available;

(5) For purposes of this paragraph, if the other order provides for a different number of classes of utilization than is provided for under this part, skim milk or butterfat allocated to the class consisting primarily of fluid milk products shall be classified as Class I milk, and skim milk or butterfat allocated to the other classes shall be classified as Class III milk; and

(6) If the form in which any fluid milk product that is transferred to an other order plant is not defined as a fluid milk product under such other order, classification shall be in accordance with the provisions of § 1007.40.

(c) *Transfers and diversions to producer-handlers and to exempt plants.* Skim milk or butterfat that is transferred or diverted from a pool plant to a producer-handler under another Federal order or to an exempt plant shall be classified:

(1) As Class I milk if transferred or diverted to a producer-handler;

(2) As Class I milk if transferred to an exempt plant in the form of a packaged fluid milk product;

(3) In accordance with the utilization assigned to it by the market administrator if transferred or diverted in the form of a bulk fluid milk product or a bulk fluid cream product to an exempt plant. For this purpose, the transferee's utilization of skim milk and butterfat in each class, in series beginning with Class III, shall be assigned to the extent possible to its receipts of skim milk and butterfat, respectively, in bulk fluid cream products, pro rata to each source.

(d) *Transfers and diversions to other nonpool plants.* Skim milk or butterfat transferred or diverted in the following forms from a pool plant to a nonpool plant that is not an other order plant, a producer-handler plant, or an exempt plant shall be classified:

(1) As Class I milk, if transferred in the form of a packaged fluid milk product; and

(2) As Class I milk, if transferred or diverted in the form of a bulk fluid milk product or transferred in the form of a bulk fluid cream product, unless the following conditions apply:

(i) If the conditions described in paragraphs (d)(2)(i) (A) and (B) of this section are met, transfers or diversions in bulk form shall be classified on the basis of the assignment of the nonpool plant's utilization to its receipts as set forth in paragraphs (d)(2) (ii) through (viii) of this section:

(A) The transferor-handler or divertor-handler claims such classification in such handler's report of receipts and utilization filed pursuant § 1007.30 for the month within which such transaction occurred; and

(B) The nonpool plant operator maintains books and records showing the utilization of all skim milk and butterfat received at such plant which are made available for verification

purposes if requested by the market administrator;

(ii) Route disposition in the marketing area of each Federal order from the nonpool plant and transfers of packaged fluid milk products from such nonpool plant to plants fully regulated thereunder shall be assigned to the extent possible in the following sequence:

(A) Pro rata to receipts of packaged fluid milk products at such nonpool plants from pool plants;

(B) Pro rata to any remaining unassigned receipts of packaged fluid milk products at such nonpool plants from other order plants;

(C) Pro rata to receipts of bulk fluid milk products at such nonpool plant from pool plants; and

(D) Pro rata to any remaining unassigned receipts of bulk fluid milk products at such nonpool plant from other order plants;

(iii) Any remaining Class I disposition of packaged fluid milk products from the nonpool plant shall be assigned to the extent possible pro rata to any remaining unassigned receipts of packaged fluid milk products at such nonpool plant from pool plants and other order plants;

(iv) Transfers of bulk fluid milk products from the nonpool plant to a plant regulated under any Federal milk order, to the extent that such transfers to the regulated plant exceed receipts of fluid milk products from such plant and are allocated to Class I at the transferee-plant, shall be classified to the extent possible in the following sequence:

(A) Pro rata to receipts of fluid milk products at such nonpool plant from pool plants; and

(B) Pro rata to any remaining unassigned receipts of fluid milk products at such nonpool plant from other order plants;

(v) Any remaining unassigned Class I disposition from the nonpool plant shall be assigned to the extent possible in the following sequence:

(A) To such nonpool plant's receipts from dairy farmers who the market administrator determines constitute regular sources of Grade A milk for such nonpool plant; and

(B) To such nonpool plant's receipts of Grade A milk from plants not fully regulated under any Federal milk order which the market administrator determines constitute regular sources of Grade A milk for such nonpool plant;

(vi) Any remaining unassigned receipts of bulk fluid milk products at the nonpool plant from pool plants and other order plants shall be assigned, pro rata among such plants, to the extent possible first to any remaining Class I utilization, then to Class II utilization, and then to Class III utilization at such nonpool plant;

(vii) Receipts of bulk fluid cream products at the nonpool plant from pool plants and other order plants shall be assigned, pro rata among such plants, to the extent possible first to any remaining Class II utilization, then to any remaining Class III utilization, and then to Class I utilization at such nonpool plant; and

(viii) In determining the nonpool plant's utilization for purposes of this paragraph, any fluid milk products and bulk fluid cream products transferred from such nonpool plant to a plant not fully regulated under any Federal milk order shall be classified on the basis of the second plant's utilization using the same assignment priorities at the second plant that are set forth in this paragraph.

(e) *Transfers by a handler described in § 1007.9(c) to pool plants.* Skim milk and butterfat transferred in the form of bulk milk by a handler described in § 1007.9(c) to another handler's pool plant shall be classified pursuant to § 1007.44 pro rata with producer milk received at the transferee-handler's plant.

§ 1007.43 General classification rules.

In determining the classification of producer milk pursuant to § 1007.44, the following rules shall apply:

(a) Each month the market administrator shall correct for mathematical and other obvious errors all reports filed pursuant to § 1007.30 and shall compute separately for each pool plant, and for each cooperative association with respect to milk for which it is the handler pursuant to § 1007.9 (b) or (c) that was not received at a pool plant, the pounds of skim milk and butterfat, respectively, in each class in accordance with §§ 1007.40, 1007.41, and 1007.42. The combined pounds of skim milk and butterfat so determined in each class for a handler described in § 1007.9 (b) or (c) shall be such handler's classification of producer milk;

(b) If any of the water contained in the milk from which a product is made is removed before the product is utilized or disposed of by the handler, the pounds of skim milk in such product that are to be considered under this part as used or disposed of by the handler shall be an amount equivalent to the nonfat milk solids contained in such product plus all of the water originally associated with such solids;

(c) The classification of producer milk for which a cooperative association is the handler pursuant to § 1007.9 (b) or (c) shall be determined separately from the operations of any pool plant operated by such cooperative association;

(d) Skim milk and butterfat contained in receipts of bulk concentrated fluid milk and nonfluid milk products that are reconstituted for fluid use shall be assigned to Class I use, up to the reconstituted portion of labeled reconstituted fluid milk products, on a pro rata basis (except for any Class I use of specific concentrated receipts that is established by the handler) prior to any assignment under § 1007.44. Any remaining skim milk and butterfat in concentrated receipts shall be assigned to uses under § 1007.44 on a pro rata basis, unless a specific use of such receipts is established by the handler; and

(e) Class III–A milk shall be allocated in combination with Class III milk and the quantity of producer milk eligible to be priced in Class III–A shall be determined by prorating receipts from pool sources to Class III–A use on the basis of the quantity of total receipts of bulk fluid milk products allocated to Class III use at the plant.

§ 1007.44 Classification of producer milk.

For each month the market administrator shall determine for each handler described in § 1007.9(a) for each pool plant of the handler separately the classification of producer milk and milk received from a handler described in § 1007.9(c), by allocating the handler's receipts of skim milk and butterfat to the utilization of such receipts by such handler as follows:

(a) Skim milk shall be allocated in the following manner:

(1) Subtract from the total pounds of skim milk in Class III the pounds of skim milk in shrinkage specified in § 1007.41(b);

(2) Subtract from the total pounds of skim milk in Class I the pounds of skim milk in:

(i) Receipts of packaged fluid milk products from an unregulated supply plant to the extent that an equivalent amount of skim milk disposed of to such plant by handlers fully regulated under any Federal milk order is classified and priced as Class I milk and is not used as an offset for any other payment obligation under any order;

(ii) Packaged fluid milk products in inventory at the beginning of the month. This paragraph shall apply only if the pool plant was subject to the provisions of this paragraph or comparable provisions of another Federal milk order in the immediately preceding month;

(3) Subtract from the pounds of skim milk remaining in each class the pounds of skim milk in fluid milk products

received in packaged form from an other order plant, except that to be subtracted pursuant to paragraph (a)(7)(vi) of this section, as follows:

(i) From Class III milk, the lesser of the pounds remaining or 2 percent of such receipts; and

(ii) From Class I milk, the remainder of such receipts;

(4) Subtract from the pounds of skim milk in Class II the pounds of skim milk in products specified in § 1007.40(b)(1) that were received in packaged form from other plants, but not in excess of the pounds of skim milk remaining in Class II;

(5) Subtract from the remaining pounds of skim milk in Class II the pounds of skim milk in products specified in § 1007.40(b)(1) in packaged form and in bulk concentrated fluid milk products that were in inventory at the beginning of the month, but not in excess of the pounds of skim milk remaining in Class II. This paragraph shall apply only if the pool plant was subject to the provisions of this paragraph or comparable provisions of another Federal milk order in the immediately preceding month;

(6) Subtract from the remaining pounds of skim milk in Class II the pounds of skim milk in bulk concentrated fluid milk products and in other source milk (except other source milk received in the form of an unconcentrated fluid milk product or a fluid cream product) that is used to produce, or added to, any product specified in § 1007.40(b) (excluding the quantity of such skim milk that was classified as Class III milk pursuant to § 1007.40(c)(6)), but not in excess of the pounds of skim milk remaining in Class II;

(7) Subtract in the order specified below from the pounds of skim milk remaining in each class, in series beginning with Class III, the pounds of skim milk in each of the following:

(i) Bulk concentrated fluid milk products and other source milk (except other source milk received in the form of an unconcentrated fluid milk product) and, if paragraph (a)(5) of this section applies, packaged inventory at the beginning of the month of products specified in § 1007.40(b)(1) that were not subtracted pursuant to paragraphs (a)(4), (a)(5), and (a)(6) of this section;

(ii) Receipts of fluid milk products (except filled milk) for which Grade A certification is not established;

(iii) Receipts of fluid milk products from unidentified sources;

(iv) Receipts of fluid milk products from a producer-handler as defined under any Federal milk order and from an exempt distributing plant;

(v) Receipts of reconstituted skim milk in filled milk from an unregulated supply plant that were not subtracted pursuant to paragraph (a)(2)(i) of this section; and

(vi) Receipts of reconstituted skim milk in filled milk from an other order plant that is fully regulated under any Federal milk order providing for individual-handler pooling, to the extent that reconstituted skim milk is allocated to Class I at the transferor-plant;

(8) Subtract in the order specified below from the pounds of skim milk remaining in Class II and Class III, in sequence beginning with Class III:

(i) The pounds of skim milk in receipts of fluid milk products from an unregulated supply plant that were not subtracted pursuant to paragraphs (a)(2)(i) and (7)(v) of this section for which the handler requests a classification other than Class I, but not in excess of the pounds of skim milk remaining in Class II and Class III combined;

(ii) The pounds of skim milk in receipts of fluid milk products from an unregulated supply plant that were not subtracted pursuant to paragraphs (a)(2)(i), (7)(v), and (8)(i) of this section which are in excess of the pounds of skim milk determined pursuant to paragraphs (a)(8)(ii) (A) through (C) of this section. Should the pounds of skim milk to be subtracted from Class II and Class III combined exceed the pounds of skim milk remaining in such classes, the pounds of skim milk in Class II and Class III combined shall be increased (increasing as necessary Class III and then Class II to the extent of available utilization in such classes at the nearest other pool plant of the handler, and then at each successively more distant pool plant of the handler) by an amount equal to such excess quantity to be subtracted, and the pounds of skim milk in Class I shall be decreased a like amount. In such case, the pounds of skim milk remaining in each class at this allocation step at the handler's other pool plants shall be adjusted in the reverse direction by a like amount;

(A) Multiply by 1.25 the sum of the pounds of skim milk remaining in Class I at this allocation step at all pool plants of the handler (excluding any duplication of Class I utilization resulting from reported Class I transfers between pool plants of the handler);

(B) Subtract from the above result the sum of the pounds of skim milk in receipts at all pool plants of the handler of producer milk, milk from a handler described in § 1007.9(c), fluid milk products from pool plants of other handlers, and bulk fluid milk products from other order plants that were not subtracted pursuant to paragraph (a)(7)(vi) of this section; and

(C) Multiply any plus quantity resulting above by the percentage that the receipts of skim milk in fluid milk products from unregulated supply plants that remain at this pool plant is of all such receipts remaining at this allocation step at all pool plants of the handler; and

(iii) The pounds of skim milk in receipts of bulk fluid milk products from an other order plant that are in excess of bulk fluid milk products transferred or diverted to such plant and that were not subtracted pursuant to paragraph (a)(7)(vi) of this section, if Class II or Class III classification is requested by the operator of the other order plant and the handler, but not in excess of the pounds of skim milk remaining in Class II and Class III combined;

(9) Subtract from the pounds of skim milk remaining in each class, in series beginning with Class III, the pounds of skim milk in fluid milk products and products specified in § 1007.40(b)(1) in inventory at the beginning of the month that were not subtracted pursuant to paragraphs (a)(2)(ii), (a)(5), and (a)(7)(i) of this section;

(10) Add to the remaining pounds of skim milk in Class III the pounds of skim milk subtracted pursuant to paragraph (a)(1) of this section;

(11) Subject to the provisions of paragraphs (a)(11) (i) and (ii) of this section, subtract from the pounds of skim milk remaining in each class at the plant, pro rata to the total pounds of skim milk remaining in Class I and in Class II and Class III combined at this allocation step at all pool plants of the handler (excluding any duplication of utilization in each class resulting from transfers between pool plants of the handler), with the quantity prorated to Class II and Class III combined being subtracted first from Class III and then from Class II, the pounds of skim milk in receipts of fluid milk products from an unregulated supply plant that were not subtracted pursuant to paragraphs (a)(2)(i), (a)(7)(v), (a)(8)(i), and (a)(8)(ii) of this section and that were not offset by transfers or diversions of fluid milk products to the same unregulated supply plant from which fluid milk products to be allocated at this step were received:

(i) Should the pounds of skim milk to be subtracted from Class II and Class III combined pursuant to paragraph (a)(11) of this section exceed the pounds of skim milk remaining in such classes, the pounds of skim milk in Class II and Class III combined shall be increased

(increasing as necessary Class III and then Class II to the extent of available utilization in such classes at the nearest other pool plant of the handler, and then at each successively more distant pool plant of the handler) by an amount equal to such excess quantity to be subtracted, and the pounds of skim milk in Class I shall be decreased a like amount. In such case, the pounds of skim milk remaining in each class at this allocation step at the handler's other pool plants shall be adjusted in the reverse direction by a like amount; and

(ii) Should the pounds of skim milk to be subtracted from Class I pursuant to paragraph (a)(11) of this section exceed the pounds of skim milk remaining in such class, the pounds of skim milk in Class I shall be increased by an amount equal to such excess quantity to be subtracted, and the pounds of skim milk in Class II and Class III combined shall be decreased by a like amount (decreasing as necessary Class III then Class II). In such case, the pounds of skim milk remaining in each class at this allocation step at the handler's other pool plants shall be adjusted in the reverse direction by a like amount, beginning with the nearest plant at which Class I utilization is available;

(12) Subtract in the manner specified below from the pounds of skim milk remaining in each class the pounds of skim milk in receipts of bulk fluid milk products from an other order plant that are in excess of bulk fluid milk products transferred or diverted to such plant that were not subtracted pursuant to paragraphs (a)(7)(vi) and (8)(iii) of this section:

(i) Subject to the provisions of paragraphs (a)(12) (ii), (iii) and (iv) of this section, such subtraction shall be pro rata to the pounds of skim milk in Class I and in Class II and Class III combined, with the quantity prorated to Class II and Class III combined being subtracted first from Class III and then from Class II, with respect to whichever of the following quantities represents the lower proportion of Class I milk:

(A) The estimated utilization of skim milk of all handlers in each class as announced for the month pursuant to § 1007.45(a); or

(B) The total pounds of skim milk remaining in each class at this allocation step at all pool plants of the handler (excluding any duplication of utilization in each class resulting from transfers between pool plants of the handler);

(ii) Should the proration pursuant to paragraph (a)(12)(i) of this section result in the total pounds of skim milk at all pool plants of the handler that are to be subtracted at this allocation step from Class II and Class III combined exceeding the pounds of skim milk remaining in Class II and Class III at all such plants, the pounds of such excess shall be subtracted from the pounds remaining in Class I after such proration at the pool plants at which such other source milk was received;

(iii) Except as provided in paragraph (a)(12)(ii) of this section, should the computations pursuant to paragraph (a)(12) (i) or (ii) of this section result in a quantity of skim milk to be subtracted from Class II and Class III combined that exceeds the pounds of skim milk remaining in such classes, the pounds of skim milk in Class II and Class III combined shall be increased (increasing as necessary Class III and then Class II to the extent of available utilization in such classes at the nearest other pool plant of the handler, and then at each successively more distant pool plant of the handler) by an amount equal to such excess quantity to be subtracted, and the pounds of skim milk in Class I shall be decreased by a like amount. In such case, the pounds of skim milk remaining in each class at this allocation step at the handler's other pool plants shall be adjusted in the reverse direction by a like amount; and

(iv) Except as provided in paragraph (a)(12)(ii) of this section, should the computations pursuant to paragraph (a)(12) (i) or (ii) of this section result in a quantity of skim milk to be subtracted from Class I that exceeds the pounds of skim milk remaining in such class, the pounds of skim milk in Class I shall be increased by an amount equal to such excess quantity to be subtracted, and the pounds of skim milk in Class II and Class III combined shall be decreased by a like amount (decreasing as necessary Class III and then Class II). In such case the pounds of skim milk remaining in each class at this allocation step at the handler's other pool plants shall be adjusted in the reverse direction by a like amount beginning with the nearest plant at which Class I utilization is available;

(13) Subtract from the pounds of skim milk remaining in each class the pounds of skim milk in receipts of fluid milk products and bulk fluid cream products from another pool plant according to the classification of such products pursuant to § 1007.42(a); and

(14) If the total pounds of skim milk remaining in all classes exceed the pounds of skim milk in producer milk and milk received from a handler described in § 1007.9(c), subtract such excess from the pounds of skim milk remaining in each class in series beginning with Class III. Any amount so subtracted shall be known as ''overage'';

(b) Butterfat shall be allocated in accordance with the procedure outlined for skim milk in paragraph (a) of this section; and

(c) The quantity of producer milk and milk received from a handler described in § 1007.9(c) in each class shall be the combined pounds of skim milk and butterfat remaining in each class after the computations pursuant to paragraph (a)(14) of this section and the corresponding step of paragraph (b) of this section.

§ 1007.45 Market administrator's reports and announcements concerning classification.

The market administrator shall make the following reports and announcements concerning classification:

(a) Whenever required for the purpose of allocating receipts from other order plants pursuant to § 1007.44(a)(12) and the corresponding step of § 1007.44(b), estimate and publicly announce the utilization (to the nearest whole percentage) in each class during the month of skim milk and butterfat, respectively, in producer milk of all handlers. Such estimate shall be based upon the most current available data and shall be final for such purpose.

(b) Report to the market administrator of the other order, as soon as possible after the report of receipts and utilization for the month is received from a handler who has received fluid milk products or bulk fluid cream products from an other order plant, the class to which such receipts are allocated pursuant to §§ 1007.43(d) and 1007.44 on the basis of such report (including any reclassification of inventories of bulk concentrated fluid milk products), and thereafter, any change in such allocation required to correct errors disclosed in the verification of such report.

(c) Furnish each handler operating a pool plant who has shipped fluid milk products or bulk fluid cream products to an other order plant the class to which such shipments were allocated by the market administrator of the other order on the basis of the report by the receiving handler, and, as necessary, any changes in such allocation arising from the verification of such report.

(d) On or before the 12th day after the end of each month, report to each cooperative association which so requests, the percentage of producer milk delivered by members of such association that was used in each class by each handler receiving such milk. For the purpose of this report the milk

so received shall be prorated to each class in accordance with the total utilization of producer milk by such handler.

Class Prices

§ 1007.50 Class prices.

Subject to the provisions of § 1007.52, the class prices for the month per hundredweight of milk containing 3.5% butterfat shall be as follows:

(a) The *Class I price* shall be the basic formula price for the second preceding month plus $3.08.

(b) The *Class II price* shall be the basic formula price for the second preceding month plus $.30.

(c) The *Class III price* shall be the basic formula price for the month.

(d) The *Class III–A price* for the month shall be the average Central States nonfat dry milk price for the month, as reported by the Department, less 12.5 cents, times an amount computed by subtracting from 9 an amount calculated by dividing 0.4 by such nonfat dry milk price, plus the butterfat differential value per hundredweight of 3.5 percent milk and rounded to the nearest cent, and subject to the adjustments set forth in paragraph (c) of this section for the applicable month.

§ 1007.51 Basic formula price.

The *basic formula price* shall be the preceding month's average pay price for manufacturing grade milk in Minnesota and Wisconsin using the ''base month'' series, as reported by the Department, adjusted to a 3.5 percent butterfat basis using the butterfat differential for the preceding month computed pursuant to § 1007.74 and rounded to the nearest cent, plus or minus the change in gross value yielded by the butter-nonfat dry milk and Cheddar cheese product price formula computed pursuant to paragraphs (a) through (e) of this section.

(a) The gross values of per hundredweight of milk used to manufacture butter-nonfat dry milk and Cheddar cheese shall be computed, using price data determined pursuant to paragraph (b) of this section and annual yield factors, for the preceding month and separately for the current month as follows:

(1) The gross value of milk used to manufacture butter-nonfat dry milk shall be the sum of the following computations:

(i) Multiply the Grade AA butter price by 4.27;

(ii) Multiply the nonfat dry milk price by 8.07; and

(iii) Multiply the dry buttermilk price by 0.42.

(2) The gross value of milk used to manufacture Cheddar cheese shall be the sum of the following computations:

(i) Multiply the Cheddar cheese price by 9.87; and

(ii) Multiply the Grade A butter price by 0.238.

(b) The following product prices shall be used pursuant to paragraph (a) of this section:

(1) *Grade AA butter price.* Grade AA butter price means the simple average for the month of the Chicago Mercantile Exchange, Grade AA butter price, as reported by the Department.

(2) *Nonfat dry milk price.* Nonfat dry milk price means the simple average for the month of the Western Nonfat Dry Milk Low/Medium Heat price, as reported by the Department.

(3) *Dry buttermilk price.* Dry buttermilk price means the simple average for the month of the Western Dry Buttermilk price, as reported by the Department.

(4) *Cheddar cheese price.* Cheddar cheese price means the simple average for the month of the National Cheese Exchange 40-pound block Cheddar cheese price, as reported by the Department.

(5) *Grade A butter price.* Grade A butter price means the simple average for the month of the Chicago Mercantile Exchange Grade A butter price, as reported by the Department.

(c) Determine the amounts by which the gross value per hundredweight of milk used to manufacture butter-nonfat dry milk and the gross value per hundredweight of milk used to manufacture Cheddar cheese for the current month exceed or are less than the respective gross values for the preceding month.

(d) Compute weighting factors to be applied to the changes in gross values determined pursuant to paragraph (c) of this section by determining the relative proportion that the data included in each of the following paragraphs is of the total of the data represented in paragraphs (d)(1) and (d)(2) of this section:

(1) Combine the total nonfat dry milk production for the States of Minnesota and Wisconsin, as reported by the Department, for the most recent preceding period, and divide by the annual yield factor for nonfat dry milk, 8.07, to determine the quantity (in hundredweights) of milk used in the production of butter-nonfat dry milk; and

(2) Combine the total American cheese production for the States of Minnesota and Wisconsin, as reported by the Department, for the most recent preceding period, and divide by the annual yield factor for Cheddar cheese, 9.87, to determine the quantity (in hundredweights) of milk used in the production of American cheese.

(e) Compute a weighted average of the changes in gross values per hundredweight of milk determined pursuant to paragraph (c) of this section in accordance with the relative proportions of milk determined pursuant to paragraph (d) of this section.

§ 1007.52 Plant location adjustments for handlers.

(a) For milk received at a plant from producers or a handler described in § 1007.9(c) and which is classified as Class I milk without movement in bulk form to a pool distributing plant at which a higher Class I price applies, the price specified in § 1007.50(a) shall be adjusted by the amount stated in paragraphs (a) (1) through (6) of this section for the location of such plant:

(1) For a plant located within one of the zones set forth in § 1007.2, the adjustment (cents per hundredweight) shall be as follows:

Zone 1	Minus 53.
Zone 2	Minus 48.
Zone 3	Minus 38.
Zone 4	Minus 31.
Zone 5	Minus 25.
Zone 6	Minus 10.
Zone 7	No adjustment.
Zone 8	Plus 10.
Zone 9	Plus 20.
Zone 10	Plus 32.
Zone 11	Plus 50.
Zone 12	Plus 57.

(2) For a plant located in that portion of the Tennessee Valley marketing area that is within the State of Georgia, the adjustment shall be minus 25 cents.

(3) For a plant located in the Missouri counties of Dunklin or Pemiscot, the adjustment shall be minus 53 cents.

(4) For a plant located in the Texas counties of Bowie or Cass, the adjustment shall be zero.

(5) For a plant located within another Federal order marketing area, other than in those counties specified in paragraphs (a) (2), (3), and (4) of this section, the adjustment shall be determined by subtracting the Class I differential price in Zone 7 of this order from the Class I differential price, adjusted for the plant's location, under such other Federal order.

(6) For a plant located outside the areas described in paragraphs (a) (1) through (5) of this section, the adjustment shall be computed by multiplying 2.5 cents per 10 miles, or fraction thereof (by the shortest hard-surfaced highway distance as determined by the market

administrator), from the nearer of Shreveport, Louisiana; Little Rock, Arkansas; Memphis, Tennessee; Jackson, Tennessee; Nashville, Tennessee; or Atlanta, Georgia, and subtracting that figure from the location adjustment applicable at Shreveport, Little Rock, Memphis, Jackson, Nashville, or Atlanta, as the case may be.

(b) For fluid milk products transferred in bulk form from a pool plant to a pool distributing plant at which a higher Class I price applies and which are classified as Class I milk, the Class I price shall be the Class I price at the transferee-plant subject to a location adjustment credit for the transferor-plant which shall be determined by the market administrator for skim milk and butterfat, respectively, as follows:

(1) Subtract from the pounds of skim milk remaining in Class I at the transferee-plant after the computations pursuant to § 1007.44(a)(12) plus the pounds of skim milk in receipts of concentrated fluid milk products from other pool plants that are assigned to Class I use, an amount equal to:

(i) The pounds of skim milk in receipts of milk at the transferee-plant from producers and handlers described in § 1007.9(c); and

(ii) The pounds of skim milk in receipts of packaged fluid milk products from other pool plants;

(2) Assign any remaining pounds of skim milk in Class I at the transferee-plant to the skim milk in receipts of fluid milk products from other pool plants, first to the transferor-plants at which the highest Class I price applies and then to other plants in sequence beginning with the plant at which the next highest Class I price applies;

(3) Compute the total amount of location adjustment credits to be assigned to transferor-plants by multiplying the hundredweight of skim milk assigned pursuant to paragraph (b)(2) of this section to each transferor-plant at which the Class I price is lower than the Class I price applicable at the transferor-plant and the transferee-plant, and add the resulting amounts;

(4) Assign the total amount of location adjustment credits computed pursuant to paragraph (b)(3) of this section to those transferor-plants that transferred fluid milk products containing skim milk classified as Class I milk pursuant to § 1007.42(a) and at which the applicable Class I price is less than the Class I price at the transferee-plant, in sequence beginning with the plant at which the highest Class I price applies. Subject to the availability of such credits, the credit assigned to each plant shall be equal to the hundredweight of such Class I skim milk multiplied by the adjustment rate determined pursuant to paragraph (b)(3) of this section for such plant. If the aggregate of this computation for all plants having the same adjustment as determined pursuant to paragraph (b)(3) of this section exceeds the credits that are available to those plants, such credits shall be prorated to the volume of skim milk in Class I in transfers from such plants; and

(5) Location adjustment credit for butterfat shall be determined in accordance with the procedure outlined for skim milk in paragraphs (b) (1) through (4) of this section.

(c) The market administrator shall determine and publicly announce the zone location of each plant of each handler. The market administrator shall notify the handler on or before the first day of any month in which a change in a plant location zone will apply.

(d) The Class I price applicable to other source milk shall be adjusted at the rates set forth in paragraph (a) of this section, except that the adjusted Class I price shall not be less than the Class III price.

§ 1007.53 Announcement of class prices.

The market administrator shall announce publicly on or before the fifth day of each month the Class I price and Class II prices for the following month, and the Class III and Class III–A prices for the preceding month.

§ 1007.54 Equivalent price.

If for any reason a price or pricing constituent required by this part for computing class prices or for other purposes is not available as prescribed in this part, the market administrator shall use a price or pricing constituent determined by the Secretary to be equivalent to the price or pricing constituent that is required.

Uniform Prices

§ 1007.60 Handler's value of milk for computing the uniform price.

For the purpose of computing the uniform price, the market administrator shall determine for each month the value of milk of each handler with respect to each of the handler's pool plants and of each handler described in § 1007.9 (b) and (c) with respect to milk that was not received at a pool plant as follows:

(a) Multiply the pounds of producer milk and milk received from a handler described in § 1007.9(c) that were classified in each class pursuant to §§ 1007.43(a) and 1007.44(c) by the applicable class prices, and add the resulting amounts;

(b) Add the amounts obtained from multiplying the pounds of overage subtracted from each class pursuant to § 1007.44(a)(14) and the corresponding step of § 1007.44(b) by the respective class prices, as adjusted by the butterfat differential specified in § 1007.74, that are applicable at the location of the pool plant;

(c) Add the amount obtained from multiplying the difference between the Class III price for the preceding month and the Class I price applicable at the location of the pool plant or the Class II price, as the case may be, for the current month by the hundredweight of skim milk and butterfat subtracted from Class I and Class II pursuant to § 1007.44(a)(9) and the corresponding step of § 1007.44(b);

(d) Add the amount obtained from multiplying the difference between the Class I price applicable at the location of the pool plant and the Class III price by the hundredweight of skim milk and butterfat assigned to Class I pursuant to § 1007.43(d) and the hundredweight of skim milk and butterfat subtracted from Class I pursuant to § 1007.44(a)(7) (i) through (iv) and the corresponding step of § 1007.44(b), excluding receipts of bulk fluid cream products from an other order plant and bulk concentrated fluid milk products from pool plants, other order plants, and unregulated supply plants;

(e) Add the amount obtained from multiplying the difference between the Class I price applicable at the location of the transferor-plant and the Class III price by the hundredweight of skim milk and butterfat subtracted from Class I pursuant to § 1007.44(a)(7) (v) and (vi) and the corresponding step of § 1007.44(b);

(f) Add the amount obtained from multiplying the Class I price applicable at the location of the nearest unregulated supply plants from which an equivalent volume was received by the pounds of skim milk and butterfat in receipts of concentrated fluid milk products assigned to Class I pursuant to § 1007.43(d) and § 1007.44(a)(7)(i) and the pounds of skim milk and butterfat subtracted from Class I pursuant to § 1007.44(a)(11) and the corresponding step of § 1007.44(b), excluding such skim milk and butterfat in receipts of fluid milk products from an unregulated supply plant to the extent that an equivalent amount of skim milk or butterfat disposed of to such plant by handlers fully regulated under any Federal milk order is classified and priced as Class I milk and is not used as an offset for any other payment obligation under any order;

(g) Subtract, for reconstituted milk made from receipts of nonfluid milk products, an amount computed by multiplying $1.00 (but not more than the difference between the Class I price applicable at the location of the pool plant and the Class III price) by the hundredweight of skim milk and butterfat contained in receipts of nonfluid milk products that are allocated to Class I use pursuant to § 1007.43(d);

(h) Exclude, for pricing purposes under this section, receipts of nonfluid milk products that are distributed as labeled reconstituted milk for which payments are made to the producer-settlement fund of another order under § 1007.76 (a)(5) or (c); and

(i) For pool plants that transfer bulk concentrated fluid milk products to other pool plants and other order plants, add or subtract the amount per hundredweight of any class price change from the previous month that results from any inventory reclassification of bulk concentrated fluid milk products that occurs at the transferee plant. Any such applicable class price change shall be applied to the plant that used the concentrated milk in the event that the concentrated fluid milk products were made from bulk unconcentrated fluid milk products received at the plant during the prior month.

§ 1007.61 Computation of uniform price (including weighted average price and uniform prices for base and excess milk).

(a) The market administrator shall compute the weighted average price for each month and the uniform price for each month of June through January per hundredweight of milk of 3.5 percent butterfat content as follows:

(1) Combine into one total the values computed pursuant to § 1007.60 for all handlers who filed the reports prescribed in § 1007.30 for the month and who made payments pursuant to § 1007.71 for the preceding month;

(2) Add not less than one-half the unobligated balance in the producer-settlement fund;

(3) Add an amount equal to the total value of the minus adjustments and subtract an amount equal to the total value of the plus adjustments computed pursuant to § 1007.75;

(4) Divide the resulting amount by the sum of the following for all handlers included in these computations;

(i) The total hundredweight of producer milk; and

(ii) The total hundredweight for which a value is computed pursuant to § 1007.60(f); and

(5) Subtract not less than 4 cents nor more than 5 cents per hundredweight. The resulting figure, rounded to the nearest cent, shall be the weighted average price for each month and the uniform price for the months of June through January.

(b) For each month of February through May, the market administrator shall compute the uniform prices per hundredweight for base milk and for excess milk, each of 3.5 percent butterfat content, as follows:

(1) Compute the total value of excess milk for all handlers included in the computations pursuant to paragraph (a)(1) of this section as follows:

(i) Multiply the hundredweight quantity of excess milk that does not exceed the total quantity of such handlers' producer milk assigned to Class III–A by the Class III–A price:

(ii) Multiply the remaining hundredweight quantity of excess milk that does not exceed the total quantity of such handlers' producer milk assigned to Class III by the Class III price:

(iii) Multiply the remaining hundredweight quantity of excess milk that does not exceed the total quantity of such handlers' producer milk assigned to Class II by the Class II price:

(iv) Multiply the remaining hundredweight quantity of excess milk by the Class I price; and

(v) Add together the resulting amounts;

(2) Divide the total value of excess milk obtained in paragraph (b)(1) of this section by the total hundredweight of such milk and adjust to the nearest cent. The resulting figure shall be the uniform price for excess milk;

(3) From the amount resulting from the computations pursuant to paragraphs (a)(1) through (a)(3) of this section subtract an amount computed by multiplying the hundredweight of milk specified in paragraph (a)(4)(ii) of this section by the weighted average price;

(4) Subtract the total value of excess milk determined by multiplying the uniform price obtained in paragraph (b)(2) of this section times the hundredweight of excess milk from the amount computed pursuant to paragraph (b)(3) of this section;

(5) Divide the amount calculated pursuant to paragraph (b)(4) of this section by the total hundredweight of base milk included in these computations; and

(6) Subtract not less than 4 cents nor more than 5 cents from the price computed pursuant to paragraph (b)(5) of this section. The resulting figure, rounded to the nearest cent, shall be the uniform price for base milk.

§ 1007.62 Announcement of uniform price and butterfat differential.

The market administrator shall announce publicly on or before:

(a) The fifth day after the end of each month the butterfat differential for such month; and

(b) The 11th day after the end of the month the applicable uniform price(s) pursuant to § 1007.61 for such month.

Payments for Milk

§ 1007.70 Producer-settlement fund.

The market administrator shall establish and maintain a separate fund known as the producer-settlement fund into which the market administrator shall deposit all payments made by handlers pursuant to §§ 1007.71, 1007.76, and 1007.77, and out of which the market administrator shall make all payments pursuant to §§ 1007.72 and 1007.77. Payments due any handler shall be offset by any payments due from such handler.

§ 1007.71 Payments to the producer-settlement fund.

(a) On or before the 12th day after the end of the month, each handler shall pay to the market administrator the amount, if any, by which the amount specified in paragraph (a)(1) of this section exceeds the amount specified in paragraph (a)(2) of this section:

(1) The total value of milk of the handler for such month as determined pursuant to § 1007.60.

(2) The sum of:

(i) The value at the uniform price(s) as adjusted pursuant to § 1007.75, of such handler's receipts of producer milk and milk received from handlers pursuant to § 1007.9(c); and

(ii) The value at the weighted average price applicable at the location of the plant from which received of other source milk for which a value is computed pursuant to § 1007.60(f).

(b) On or before the 25th day after the end of the month each person who operated an other order plant that was regulated during such month under an order providing for individual-handler pooling shall pay to the market administrator an amount computed as follows:

(1) Determine the quantity of reconstituted skim milk in filled milk in route disposition from such plant in the marketing area which was allocated to Class I at such plant. If there is route disposition from such plant in marketing areas regulated by two or more marketwide pool orders, the reconstituted skim milk allocated to Class I shall be prorated to each order according to such route disposition in each marketing area; and

(2) Compute the value of the reconstituted skim milk assigned in paragraph (b)(1) of this section to route disposition in this marketing area by the difference between the Class I price under this part applicable at the location of the other order plant (but not to be less than the Class III price) and the Class III price.

§ 1007.72 Payments from the producer-settlement fund.

On or before the 13th day after the end of each month, the market administrator shall pay to each handler the amount, if any, by which the amount computed pursuant to § 1007.71(a)(2) exceeds the amount computed pursuant to § 1007.71(a)(1). If, at such time, the balance in the producer-settlement fund is insufficient to make all payments pursuant to this section, the market administrator shall reduce uniformly such payments and shall complete such payments as soon as the funds are available.

§ 1007.73 Payments to producers and to cooperative associations.

(a) Each handler shall pay each producer for producer milk for which payment is not made to a cooperative association pursuant to paragraph (b) of this section, as follows:

(1) On or before the 26th day of each month, for milk received during the first 15 days of the month from such producer who has not discontinued delivery of milk to such handler before the 23rd day of the month at not less than the Class III price for the preceding month or 90 percent of the weighted average price for the preceding month, whichever is higher, less proper deductions authorized in writing by the producer. If the producer had discontinued shipping milk to such handler before the 25th day of any month, or if the producer had no established base upon which to receive payments during the base paying months of February through May, the applicable rate for making payments to such producer shall be the Class III price for the preceding month; and

(2) On or before the 15th day of the following month, an amount equal to not less than the uniform price(s), as adjusted pursuant to §§ 1007.74 and 1007.75, multiplied by the hundredweight of milk or base milk and excess milk received from such producer during the month, subject to the following adjustments:

(i) Less payments made to such producer pursuant to paragraph (a)(1) of this section;

(ii) Less deductions for marketing services made pursuant to § 1007.86;

(iii) Plus or minus adjustments for errors made in previous payments made to such producers; and

(iv) Less proper deductions authorized in writing by such producer.

(3) If a handler has not received full payment from the market administrator pursuant to § 1007.72 by the 15th day of such month, such handler may reduce payments pursuant to this paragraph to producers on a pro rata basis but not by more than the amount of the underpayment. Such payments shall be completed thereafter not later than the date for making payments pursuant to this paragraph next following after receipt of the balance due from the market administrator.

(b) On or before the day prior to the dates specified in paragraph (a) (1) and (2) of this section, each handler shall make payment to the cooperative association for milk from producers who market their milk through the cooperative association and who have authorized the cooperative to collect such payments on their behalf an amount equal to the sum of the individual payments otherwise payable for such producer milk pursuant to paragraph (a) (1) and (2) of this section.

(c) If a handler has not received full payment from the market administrator pursuant to § 1007.72 by the 15th day of such month, such handler may reduce payments pursuant to paragraph (b) of this section to such cooperative association on a pro rata basis, prorating such underpayment to the volume of milk received from such cooperative association in proportion to the total milk received from producers by the handler, but not by more than the amount of the underpayment. Such payments shall be completed in the following manner:

(1) If the handler receives full payment from the market administrator by the 15th day of the month, the handler shall make payment to the cooperative association of the full value of the underpayment on the 15th day of the month;

(2) If the handler has not received full payment from the market administrator by the 15th day of the month, the handler shall make payment to the cooperative association of the full value of the underpayment on or before the date for making such payments pursuant to this paragraph next following after receipt of the balance due from the market administrator.

(d) Each handler pursuant to § 1007.9(a) who receives milk from a cooperative association as a handler pursuant to § 1007.9(c), including the milk of producers who are not members of such association, and who the market administrator determines have authorized such cooperative association to collect payment for their milk, shall pay such cooperative for such milk as follows:

(1) On or before the 25th day of the month for milk received during the first 15 days of the month, not less than the Class III price for the preceding month or 90 percent of the weighted average price for the preceding month, whichever is higher; and

(2) On or before the 14th day of the following month, not less than the appropriate uniform price(s) as adjusted pursuant to §§ 1007.74 and 1007.75, and less any payments made pursuant to paragraph (d)(1) of this section.

(e) If a handler has not received full payment from the market administrator pursuant to § 1007.72 by the 14th day of such month, such handler may reduce payments pursuant to paragraph (d) of this section to such cooperative association and complete such payments for milk received from such cooperative association in its capacity as a handler pursuant to § 1007.9(c), in the manner prescribed in paragraph (c) (1) and (2) of this section.

(f) In making payments to producers pursuant to this section, each handler shall furnish each producer, except a producer whose milk was received from a handler described in § 1007.9(c), a supporting statement in such form that it may be retained by the recipient which shall show:

(1) The month and identity of the producer;

(2) The daily and total pounds and the average butterfat content of producer milk;

(3) For the months of February through May the total pounds of base milk received from such producer;

(4) The minimum rate(s) at which payment to the producer is required pursuant to this order;

(5) The rate(s) used in making the payment if such rate(s) is (are) other than the applicable minimum rate(s);

(6) The amount, or rate per hundredweight, and nature of each deduction claimed by the handler; and

(7) The net amount of payment to such producer or cooperative association.

§ 1007.74 Butterfat differential.

For milk containing more or less than 3.5 percent butterfat, the uniform prices for base and excess milk shall be increased or decreased, respectively, for each one-tenth percent butterfat variation from 3.5 percent by a butterfat differential, rounded to the nearest one-tenth cent, which shall be 0.138 times the current month's butter price less

0.0028 times the preceding month's average pay price per hundredweight, at test, for manufacturing grade milk, in Minnesota and Wisconsin, using the ''base month'' series, adjusted pursuant to § 1007.51(a) through (e), as reported by the Department. The butter price means the simple average for the month of the Chicago Mercantile Exchange, Grade A butter price as reported by the Department.

§ 1007.75 Plant location adjustments for producers and on nonpool milk.

(a) The uniform price and the uniform price for base milk shall be adjusted according to the location of the plant at which the milk was physically received at the rates set forth in § 1007.52(a); and

(b) The weighted average price applicable to other source milk shall be adjusted at the rates set forth in section § 1007.52(a) applicable at the location of the nonpool plant from which the milk was received, except that the adjusted weighted average price shall not be less than the Class III price.

§ 1007.76 Payments by a handler operating a partially regulated distributing plant.

Each handler who operates a partially regulated distributing plant shall pay on or before the 25th day after the end of the month to the market administrator for the producer-settlement fund the amount computed pursuant to paragraph (a) of this section. If the handler submits pursuant to §§ 1007.30(b) and 1007.31(b) the information necessary for making the computations, such handler may elect to pay in lieu of such payment the amount computed pursuant to paragraph (b) of this section:

(a) The payment under this paragraph shall be an amount resulting from the following computations:

(1) Determine the pounds of route disposition in the marketing area from the partially regulated distributing plant;

(2) Subtract the pounds of fluid milk products received at the partially regulated distributing plant:

(i) As Class I milk from pool plants and other order plants, except that subtracted under a similar provision of another Federal milk order; and

(ii) From another nonpool plant that is not an other order plant to the extent that an equivalent amount of fluid milk products disposed of to such nonpool plant by handlers fully regulated under any Federal milk order is classified and priced as Class I milk and is not used as an offset for any payment obligation under any order;

(3) Subtract the pounds of reconstituted milk that are made from nonfluid milk products and which are then disposed of as route disposition in the marketing area from the partially regulated distributing plant;

(4) Multiply the remaining pounds by the difference between the Class I price and the weighted average price, both prices to be applicable at the location of the partially regulated distributing plant (except that the Class I price and weighted average price shall not be less than the Class III price); and

(5) Add the amount obtained from multiplying the pounds of labeled reconstituted milk included in paragraph (a)(3) of this section by the difference between the Class I price applicable at the location of the partially regulated distributing plant less $1.00 (but not to be less than the Class III price) and the Class III price. For any reconstituted milk that is not so labeled, the Class I price shall not be reduced by $1.00. Alternatively, for such disposition, payments may be made to the producer-settlement fund of the order regulating the producer milk used to produce the nonfluid milk ingredients at the difference between the Class I price applicable under the other order at the location of the plant where the nonfluid milk ingredients were processed (but not to be less than the Class III price) and the Class III price. This payment option shall apply only if a majority of the total milk received at the plant that processed the nonfluid milk ingredients is regulated under one or more Federal orders and payment may only be made to the producer-settlement fund of the order pricing a plurality of the milk used to produce the nonfluid milk ingredients. This payment option shall not apply if the source of the nonfluid ingredients used in reconstituted fluid milk products cannot be determined by the market administrator.

(b) The payment under this paragraph shall be the amount resulting from the following computations:

(1) Determine the value that would have been computed pursuant to § 1007.60 for the partially regulated distributing plant if the plant had been a pool plant, subject to the following modifications:

(i) Fluid milk products and bulk fluid cream products received at the partially regulated distributing plant from a pool plant or an other order plant shall be allocated at the partially regulated distributing plant to the same class in which such products were classified at the fully regulated plant;

(ii) Fluid milk products and bulk fluid cream products transferred from the partially regulated distributing plant to a pool plant or an other order plant shall be classified at the partially regulated distributing plant in the class to which allocated at the fully regulated plant. Such transfers shall be computed to the extent possible to those receipts at the partially regulated distributing plant from pool plants and other order plants that are classified in the corresponding class pursuant to paragraph (b)(1)(i) of this section. Any such transfers remaining after the above allocation which are in Class I and for which a value is computed for the handler operating the partially regulated distributing plant pursuant to § 1007.60 shall be priced at the uniform price (or at the weighted average price if such is provided) of the respective order regulating the handling of milk at the transferee plant, with such uniform price adjusted to the location of the nonpool plant (but not to be less than the lowest class price of the respective order), except that transfers of reconstituted skim milk in filled milk shall be priced at the lowest price class of the respective order; and

(iii) If the operator of the partially regulated distributing plant so requests, the value of milk determined pursuant to § 1007.60 for such handler shall include, in lieu of the value of other source milk specified in § 1007.60(f) less the value of such other source milk specified in § 1007.71(a)(2)(ii), a value of milk determined pursuant to § 1007.60 for each nonpool plant that is not an other order plant which serves as a supply plant for such partially regulated distributing plant by making shipments to the partially regulated distributed plant during the month equivalent to the requirements of § 1007.7(b), subject to the following conditions:

(A) The operator of the partially regulated distributing plant submits with its reports filed pursuant to §§ 1007.30(b) and 1007.31(b) similar reports for each such nonpool supply plant;

(B) The operator of such nonpool plant maintains books and records showing the utilization of all skim milk and butterfat received at such plant which are made available if requested by the market administrator for verification purposes; and

(C) The value of milk determined pursuant to § 1007.60 for such nonpool supply plant shall be determined in the same manner prescribed for computing the obligation of such partially regulated distributing plant; and

(2) From the partially regulated distributing plant's value of milk computed pursuant to paragraph (b)(1) of this section, subtract:

(i) The gross payments by the operator of the partially regulated distributing plant, adjusted to a 3.5 percent butterfat basis by the butterfat differential specified in § 1007.74, for milk received at the plant during the month that would have been producer milk had the plant been fully regulated;

(ii) If paragraph (b)(1)(iii) of this section applies, the gross payments by the operator of such nonpool supply plant, adjusted to a 3.5 percent butterfat basis by the butterfat differential specified in § 1007.74, for milk received at the plant during the month that would have been producer milk if the plant had been fully regulated; and

(iii) The payments by the operator of the partially regulated distributing plant to the producer-settlement fund of another order under which such plant is also a partially regulated distributing plant and like payments by the operator of the nonpool supply plant if paragraph (b)(1)(iii) of this section applies.

(c) Any handler may elect partially regulated distributing plant status for any plant with respect to receipts of nonfluid milk ingredients assigned to Class I use under § 1007.43(d). Payments may be made to the producer-settlement fund of the order regulating the producer milk used to produce the nonfluid milk ingredients at the difference between the Class I price applicable under the other order at the location of the plant where the nonfluid milk ingredients were processed (but not less than the Class III price) and the Class III price. This payment option shall apply only if a majority of the total milk received at the plant that processed the nonfluid milk ingredients is regulated under one or more Federal orders and payment may only be made to the producer-settlement fund of the order pricing a plurality of the milk used to produce the nonfluid milk ingredients. This payment option shall not apply if the source of the nonfluid ingredients used in reconstituted fluid milk products cannot be determined by the market administrator.

§ 1007.77 Adjustment of accounts.

Whenever audit by the market administrator of any handler's reports, books, records, or accounts, or other verification discloses errors resulting in money due the market administrator from a handler, or due a handler from the market administrator, or due a producer or cooperative association from a handler, the market administrator shall promptly notify such handler of any amount so due and payment thereof shall be made on or before the next date for making payments as set forth in the provisions under which the error(s) occurred.

§ 1007.78 Charges on overdue accounts.

Any unpaid obligation due the market administrator from a handler pursuant to §§ 1007.71, 1007.76, 1007.77, 1007.78, 1007.85, and 1007.86 shall be increased 1.5 percent each month beginning with the day following the date such obligation was due under the order. Any remaining amount due shall be increased at the same rate on the corresponding day of each month until paid. The amounts payable pursuant to this section shall be computed monthly on each unpaid obligation and shall include any unpaid charges previously made pursuant to this section. The late charges shall be added to the respective accounts to which due. For the purpose of this section, any obligation that was determined at a date later than prescribed by the order because of a handler's failure to submit a report to the market administrator when due shall be considered to have been payable by the date it would have been due if the report had been filed when due.

Administrative Assessment and Marketing Service Deduction

§ 1007.85 Assessment for order administration.

As each handler's pro rata share of the expense of administration of the order, each handler shall pay to the market administrator on or before the 15th day after the end of the month 5 cents per hundredweight or such lesser amount as the Secretary may prescribe with respect to:

(a) Receipts of producer milk (including such handler's own production) other than such receipts by a handler described in § 1007.9(c) that were delivered to pool plants of other handlers;

(b) Receipts from a handler described in § 1007.9(c);

(c) Receipts of concentrated fluid milk products from unregulated supply plants and receipts of nonfluid milk products assigned to Class I use pursuant to § 1007.43(d) and other source milk allocated to Class I pursuant to § 1007.44(a) (7) and (11) and the corresponding steps of § 1007.44(b), except such other source milk that is excluded from the computations pursuant to § 1007.60 (d) and (f); and

(d) Route disposition in the marketing area from a partially regulated distributing plant that exceeds the skim milk and butterfat subtracted pursuant to § 1007.76(a)(2).

§ 1007.86 Deduction for marketing services.

(a) Except as provided in paragraph (b) of this section each handler, in making payments to producers for milk (other than milk of such handler's own production) pursuant to § 1007.73, shall deduct 7 cents per hundredweight or such lesser amount as the Secretary may prescribe and shall pay such deductions to the market administrator not later than the 15th day after the month. Such money shall be used by the market administrator to verify or establish weights, samples and tests of producer milk and provide market information for producers who are not receiving such services from a cooperative association. Such services shall be performed in whole or in part by the market administrator or an agent engaged by and responsible to the market administrator;

(b) In the case of producers for whom a cooperative association that the Secretary has determined is actually performing the services set forth in paragraph (a) of this section, each handler shall make, in lieu of the deduction specified in paragraph (a) of this section, such deductions from the payments to be made to such producers as may be authorized by the membership agreement or marketing contract between such cooperative association and such producers, and on or before the 15th day after the end of the month, pay such deductions to the cooperative association rendering such services accompanied by a statement showing the amount of any such deductions and the amount of milk for which such deduction was computed for each producer.

Base-Excess Plan

§ 1007.90 Base milk.

Base milk means the producer milk of a producer in each month of February through May that is not in excess of the producer's base multiplied by the number of days in the month.

§ 1007.91 Excess milk.

Excess milk means the producer milk of a producer in each month of February through May in excess of the producer's base milk for the month, and shall include all the producer milk in such months of a producer who has no base.

§ 1007.92 Computation of base for each producer.

(a) Subject to paragraph (c) of this section, a base for each dairy farmer who was a producer pursuant to § 1007.12 during one or more of the immediately preceding months of July through December shall be determined

by dividing the total pounds of producer milk delivered by such producer during each of those months by the number of calendar days in the month, adding together the four highest monthly averages so computed, and dividing by four. If a producer operated more than one farm at the same time, a separate computation of base shall be made for each such farm.

(b) Any producer who delivered milk to a nonpool plant that became a pool plant after the beginning of the July-December base-forming period shall be assigned a base calculated as if the plant were a pool plant during such entire base-forming period. A base thus assigned shall not be transferable.

(c) A person who was unable to qualify as a producer during four or more of the immediately preceding months of July through December or who did not have at least four complete months of production, in either case for one or more of the reasons specified in this paragraph, may request a base computation based upon a lesser number of months by submitting to the market administrator in writing on or before February 1 a statement that establishes to the satisfaction of the market administrator that during four or more of the months in the immediately preceding July through December base-forming period the amount of milk produced on such producer's farm was substantially reduced because of conditions beyond the control of such person as a result of:

(1) The loss by fire, windstorm, or other natural disaster of a farm building used in the production of milk on the producer's farm;

(2) Brucellosis, bovine tuberculosis or other infectious diseases in the producer's milking herd as certified by a licensed veterinarian; or

(3) A quarantine by a Federal or State authority that prevented the dairy farmer from supplying milk from the farm of such producer to a plant.

§ 1007.93 Base rules.

(a) Except as provided in § 1007.92 (b) and (c) and paragraph (b) of this section, a base may be transferred in its entirety or in amounts of not less than 300 pounds effective on the first day of the month following the date on which such application is received by the market administrator. Base may be transferred only to a person who is or will be a producer by the end of the month that the transfer is to be effective. A base transfer to be effective on February 1 for the month of February must be received on or before February 15. Such application shall be on a form approved by the market administrator and signed by the baseholder or the legal representative of the baseholder's estate. If a base is held jointly, the application shall be signed by all joint holders or the legal representative of the estate of any deceased baseholder.

(b) A producer who transferred base on or after February 1 may not receive by transfer additional base that would be applicable during February through May of the same year. A producer who received base by transfer on or after February 1 may not transfer a portion of the base to be applicable during February through May of the same year, but may transfer the entire base.

(c) The base established by a partnership may be divided between the partners on any basis agreed to in writing by them if written notification of the agreed upon division of base by each partner is received by the market administrator prior to the first day of the month in which such division is to be effective.

(d) Two or more producers in a partnership may combine their separately established bases by giving notice to the market administrator prior to the first day of the month in which such combination of bases is to be effective.

§ 1007.94 Announcement of established bases.

On or before January 31 of each year, the market administrator shall calculate a base for each person who was a producer during one or more of the preceding months of July through December and shall notify each producer and the handler receiving milk from such dairy farmer of the base established by the producer. If requested by a cooperative association, the market administrator shall notify the cooperative association of each producer-member's base.

PARTS 1093, 1094, 1096, AND 1108 [REMOVED AND RESERVED]

2. Parts 1093, 1094, 1096, and 1108 are removed and reserved.

Dated: May 23, 1995.

Patricia Jensen,

Acting Assistant Secretary, Marketing and Regulatory Programs.

[FR Doc. 95–13160 Filed 6–1–95; 8:45 am]

BILLING CODE 3410–02–P

federal register

Friday
June 2, 1995

Part IV

Department of Housing and Urban Development

Office of the Assistance Secretary for Public and Indian Housing

Funding Availability for Training and Technical Assistance for the Prevention of Youth Violence in Public Housing; Notice

DEPARTMENT OF HOUSING AND URBAN DEVELOPMENT

Office of the Assistant Secretary for Public and Indian Housing

[Docket No. N–95–3906; FR–3889–N–01]

Notice of Funding Availability for Training and Technical Assistance for the Prevention of Youth Violence in Public Housing

AGENCY: Office of the Assistant Secretary for Public and Indian Housing, HUD.

ACTION: Notice of Funding Availability (NOFA) for Training and Technical Assistance for the Prevention of Youth Violence in Public Housing.

SUMMARY: This NOFA solicits applications for a single two-year grant of up to $500,000. The grant is being awarded for the purposes of developing and implementing training and technical assistance (TA) for the prevention of youth violence in Public Housing. The TA and training are intended to assist public housing communities in conducting youth violence prevention activities and in using the most relevant scientific information when doing so. HUD is joining with the Centers for Disease Control and Prevention in this effort.

DATES: Applications must be received at HUD Headquarters at the address below on or before 3 p.m., Eastern Time, July 17, 1995. This application deadline is firm as to date and hour. In the interest of fairness of all competing applicants, the Department will treat as ineligible for consideration any application that is received after the deadline. Applicants should take this practice into account and make early submission of their materials to avoid any risk of loss of eligibility brought about by any unanticipated or delivery-related problems. Applications received after the deadline will not be considered. A FAX is not acceptable.

APPLICATION SUBMISSION: An original and two copies of the application must be received by the deadline date at HUD Headquarters. Applications (originals and two copies) should be sent to the Crime Prevention and Security Division of the Office of Community Relations and Involvement (OCRI), Public and Indian Housing, Department of Housing and Urban Development, Room 4116, 451 Seventh Street, SW., Washington, DC 20410–0500.

FOR FURTHER INFORMATION, CONTACT: Elizabeth A. Cocke, Crime Prevention and Security Division (CPSD), Office of Community Relations and Involvement (OCRI), Public and Indian Housing, Department of Housing and Urban Development, Room 4116, 451 Seventh Street, SW., Washington, DC 20410, telephone (202) 708–1197. A telecommunications device for hearing or speech impaired persons (TDD) is available at (202) 708–0850. (These are not toll-free telephone numbers.)

SUPPLEMENTARY INFORMATION:

Paperwork Reduction Act Statement

The information collection requirements contained in this notice have been submitted to the Office of Management and Budget for review under the provisions of the Paperwork Reduction Act of 1980 (44 U.S.C. 3501–3520) and have been assigned OMB control number 2577–0197, expiration date May 31, 1997.

I. Purpose and Substantive Description

(a) Authority

This grant is authorized under Chapter 2, Subtitle C, Title V of the Anti-Drug Abuse Act of 1988 (42 U.S.C. 11901 *et seq.*), as amended by Section 581 of the National Affordable Housing Act of 1990 (approved November 28, 1990, Pub. L. 101–625) (NAHA), and Section 161 of the Housing and Community Development Act of 1992 (Pub. L. 102–550, approved October 28, 1992) (1992 HCD Act).

(b) Allocation Amounts

The Department of Veterans Affairs and Housing and Urban Development, and Independent Agencies Appropriations Act 1995 (approved September 28, 1994, Pub. Law 103–327) (95 App. Act) appropriated $290 million for the Drug Elimination Program. Of the total $290 million appropriated, $10 million will fund drug elimination TA, contracts and other assistance training, program assessments, and associated costs (such as the cost of necessary travel for training participants). This NOFA makes up to $550,000 of the $10 million available for a cost-reimbursable grant of two years in duration.

(c) Eligibility

Organizations or combinations of organizations that can demonstrate experience and capability in youth violence prevention activities, scientific reviews, needs assessments, development and delivery of instructional materials, project monitoring and successful health promotion/disease prevention interaction with Pubic Housing Agencies (PHAs) or Community Based Organizations (CBOs) in low-income communities are eligible to apply.

(d) Background

Youth violence has become one of the greatest health problems in the United States. During the period from 1979 to 1991, homicide was the leading cause of death among African Americans 15 to 34 years of age and the second leading cause of death among African American youth 10 to 14 years of age. Risk factors such as poverty, hopelessness, low self esteem and discrimination are recognized as major factors contributing to youth violence.

A large proportion of teenagers in public housing are engaged in a constellation of high risk behaviors. A 1993 study of public housing drug, violent, and property crime rates in Los Angeles, Phoenix and Washington, DC showed that rates for these activities were considerably higher in public housing developments than citywide, and much higher than in large urban communities (Dunworth and Saiger, Rand Study, 1993).

HUD and the National Centers for Disease Control and Prevention (CDC) are soliciting applications for a single two-year grant of up to $550,000. The purpose of the grant is to assist public housing staff and residents in applying the results of current scientific research to the prevention of youth violence in pubic housing communities.

The HUD–CDC collaboration will increase the use of scientifically supported youth violence prevention activities in public housing developments. This is to be accomplished by the development and implementation of a system to provide scientifically based information, training, and other forms of technical assistance (TA) to PHAs throughout the United States. The effort will: (a) Determine the amount and type of youth violence prevention activities currently undertaken by PHAs; (b) determine the tools required by PHAs to augment both the quality and quantity of youth violence prevention activities; (c) develop a system to deliver TA to PHAs; and (d) implement and monitor the TA delivery system. In addition, the project will assist the research community in identifying and addressing youth violence prevention issues related to public housing.

(e) Grant Objectives

(1) First Year Objectives

(i) Develop, administer, and maintain an advisory group: This group at minimum should include representatives from PHA staff and residents (including young PHA residents), academia, CBOs, pubic

health practitioners, and youth violence prevention program directors.

(ii) Identify and summarize existing PHA youth violence prevention efforts.

(iii) Identify and summarize the existing capability and need of PHAs to implement youth violence prevention activities (i.e. conduct a needs assessment).

(iv) Identify and summarize research on youth violence prevention pertinent to PHAs.

(v) Develop a realistic plan of action to deliver the TA to PHAs, thereby enabling the PHAs to implement scientifically based youth violence prevention activities.

(vi) Develop a plan to monitor and assess the effectiveness of the TA delivery system.

(vii) Review the plan of action and the findings of the first year's activities with the advisory group. Revise the plan of action.

(2) Second Year Objectives

(i) Implement the delivery of the TA to the PHAs.

(ii) Monitor the implementation of the TA delivery system.

(iii) Monitor the use of information and materials by the PHAs.

(iv) Review the progress and status of the project with the advisory group each semi-annual period.

(v) Share these findings with PHAs and the research community.

(f) Scope of Work

(1) General Requirements

(i) The grantee shall furnish all necessary personnel, materials, services, and equipment. The grantee shall also perform all work necessary for, or incidental to, the completion of the tasks set forth in paragraph I.(f)(2) of this NOFA.

(ii) The work to be performed under this grant includes, but is not limited to: Work with advisory groups; review of the administration and effectiveness of current PHA youth violence prevention efforts; provision of TA and training; evaluation of the TA and training; and submission of regular reports. In addition, the grantee shall attend one or more advisory group meetings at either HUD or CDC Headquarters each semi-annual period to provide a summary of the progress on the grant work.

(2) Specific Requirements

The grantee shall perform the following tasks in accordance with the grant objectives set forth in paragraph I.(e) of this NOFA.

(i) *Task 1—Orientation.* Within five working days after the effective date of the grant, the Project Director and other key personnel shall attend a meeting at HUD Headquarters in Washington, DC, for the purpose of establishing an approved grant strategy for achieving the grant objectives, the scope of the work necessary to achieve the objectives, and the time frame and methodology for implementing the grant strategy.

(ii) *Task 2—Management and Work Plan.* The grantee shall develop a draft management and work plan that addresses all of the requirements contained in the approved grant strategy and provide an updated and detailed work plan for the entire project. This draft work plan and budget, setting forth the timing of all stages of the project, shall be submitted to the HUD Government Technical Representative (GTR) for review and comment within 14 working days after the effective date of the grant. The plan shall include a detailed allocation of grant resources, a projected list of PHAs that will receive the TA and training (the PHAs must be diverse in size and geographic location), and a schedule for the accomplishment of the grant work. HUD and CDC shall submit their comments and suggestions to the grantee within ten working days from receipt of the draft plan. The grantee will submit a final management and work plan incorporating HUD and CDC's comments and suggestions within ten working days of having received the comments from HUD and CDC.

(iii) *Task 3*: *Advisory Group.* The grantee shall develop, administer, and maintain an advisory group. This group should include, but not be limited to, representatives of PHA staff and residents (including young PHA residents), academia, community based organizations, public health practitioners, and youth violence prevention program directors. The grantee shall submit a final list of advisory board members, approved by HUD and the CDC, within five weeks of the award's effective date. The grantee shall assemble and receive advice from the group within eight weeks of the award, and at least semi-annually thereafter.

(iv) *Task 4*: *Review Existing Efforts.* The grantee shall identify and summarize PHA youth violence prevention efforts. Furthermore, the grantee shall work with PHAs to identify existing youth violence prevention activities, the means by which the PHAs learned of and selected the activities, and any empirical evidence supporting the value of those activities. The work shall also determine the level of PHA knowledge about the value and types of other youth violence prevention activities that might be implemented, and the interest and capacity of PHAs to implement such programs.

(v) *Task 5*: *Identify Prevention Research and Programs.* The grantee shall identify and summarize research on youth violence prevention. The grantee's research will include, but not be limited to, published scientific articles, work in progress, and government and other agency publications. The grantee shall highlight findings of its research that bear directly upon its anticipated work with PHAs, including, but not limited to, research and programs related to low-income communities, single-parent families, geographic concentrations of housing in some communities and scattered site housing in others.

(vi) *Task 6*: *Develop Plan.* The grantee shall develop a realistic plan of action to provide TA and training to PHAs. This will include working with public housing communities as well as national and regional organizations to determine the need for and perceived value of particular youth violence prevention activities. The work will also include developing effective material and methods for delivering the necessary TA and training, delivering the TA and training, and assessing the effectiveness of the delivery system. The plan will address the following issues, although it will not be limited to them: working with people from diverse ethnic and cultural backgrounds, working in low-income communities with limited public space for meetings and training, overall limited resources in sometimes unsafe communities, the time and logistical constraints of single-parent families, and the logistical issues of scattered-site housing in some instances.

(vii) *Task 7*: *Review Findings and Plan.* The grantee shall review the conclusions and results of the first year's activities with the advisory group. The purpose of the review will be to develop priorities for the second year's activities.

(viii) *Task 8*: *Implement Technical Assistance and Training.* The grantee shall, based on the first year's activities, implement the TA and training strategy for and with public housing staff and residents.

(ix) *Task 9*: *Process Evaluation.* After the TA has been delivered, the grantee shall document the delivery of materials, training, and other forms of TA to the PHAs. Furthermore, the grantee shall document the PHAs' acquisition of information and their use of materials and methods transmitted via TA.

(x) *Task 10*: *Review the Progress.* The grantee shall conduct a semiannual review of the project's progress with the advisory group, CDC, and HUD. The purpose of the review will be to identify and propose plans to address any barriers to the implementation of the project.

(xi) *Task 11*: *Distribute findings.* The grantee shall develop an implementation plan to share results with PHAs (staff and residents), CBOs, academia, youth violence prevention program directors, and other organizations that may be interested in the results.

(3) CDC Activities

(i) Attend all semiannual progress reviews. Review and offer assistance in revising the plan of action.

(ii) Provide consultation and technical assistance in the design of the data collection methods and instruments for the summary of activities and the needs assessment.

(iii) Assist in data analysis and interpretation.

(iv) Provide scientific information about youth violence prevention.

(v) Assist in the development and implementation of a reporting system to monitor program activities.

(vi) Assist in the transfer of information and methods developed in this project to other PHAs.

(4) HUD Activities

(i) Provide a Government Technical Representative (GTR) and have full administrative responsibility for the grant.

(ii) Provide technical and programmatic assistance to the advisory group.

(iii) Provide consultation and TA in the collection of information, especially in identifying and working with PHAs. These PHAs will include, but not be limited to, PHAs which are interested in developing youth violence prevention programs, have youth violence prevention plans, have implemented youth violence prevention activities, or have evaluated their youth violence prevention activities.

(iv) Assist in identifying the current methods which PHA staff and residents are using to identify, choose, and evaluate youth violence prevention programs.

(v) Provide up-to-date information on any changes in public housing administration, or general HUD grant administration, which might have an impact on the implementation of youth violence prevention programs in public housing.

(vi) Assist in the transfer of information and methods developed in this grant to PHAs.

(vii) Assist in reviewing the findings of the first year's activities and the plan of action. Offer assistance in revising the plan of action.

(g) Selection Criteria

Applications submitted in response to this competitive announcement will be reviewed by a panel chosen by HUD and CDC representatives, which will make recommendations to the HUD Assistant Secretary for Public and Indian Housing. The initial panel will assign numerical values based on the weighted selection criteria. In the case of a numerical tie, preference will be given to the applicant with the highest numerical score for the Fourth Criterion, Quality of the Plan (see paragraph I. (g)(4) below). The top three to five scoring applications will then be reviewed and rescored by a secondary panel chosen by CDC and HUD representatives. The final award will be made by the HUD Assistant Secretary for Public and Indian Housing. Letters will be sent to all applicants notifying them that their proposal has been selected or the reason(s) it was not selected. HUD will then negotiate the specific terms of the award with the selected applicant.

(1) First Criterion: Corporate and Organizational Capacity (Maximum Points: 20)

(i) *Corporate Capacity.* (Maximum Points: 10)

The applicant must provide evidence of corporate and organizational structures and prior corporate and organizational experience that will contribute to the successful implementation of the tasks described in this NOFA. Furthermore, the applicant must demonstrate a commitment to equal employment opportunity and the ability to work successfully with culturally diverse groups.

(ii) *Administrative Capacity.* (Maximum Points: 10)

Applicants must demonstrate the financial capability, organization, staff size and prior experience that will maximize the effective implementation of a project of this size and scope. To permit HUD to make an evaluation on this criterion, the applicant must submit a detailed budget for the grant program, including the basis for computation of the costs for each of the outlined tasks. Additionally, the program budget must be complete, reasonable, and cost-effective in relation to the proposed program. The applicant must also demonstrate experience in designing and delivering TA and training on-time and within budget for other nationwide projects. Applicants should also submit references from individuals for whom previous work was completed.

(2) Second Criterion: Staff Qualifications (Maximum Points: 20)

(i) *Project Director.* (Maximum Points: 10)

The applicant must provide evidence of the Project Director's prior experience in effectively managing budgets and staffs of a similar size to those involved with this grant project. This evidence may include past success in completing youth violence related work of a similar size and nature on-time and within budget. This evidence may also include successful past experience in managing staff from culturally diverse communities. Applicants must also demonstrate their ability to obtain the cooperation and/or resources of PHA staff and residents, appropriate researchers and research organizations in order to manage advisory group meetings and implement programs.

(ii) *Project Staff.* (Maximum Points: 10)

The applicant must demonstrate the capacity of project staff to quickly and efficiently organize advisory groups similar to the one involved in this grant project, undertake scientific literature reviews, review ongoing public housing activities, conduct needs assessments, develop TA and training, and monitor the progress of the project in a professional manner. Staff must demonstrate successful experience in working with and providing TA to public housing staff and residents while resolving any substantial issues specific to public housing programs. Additionally, the applicant must submit evidence of its capability to work with program and research staff in a manner that maximizes their interest and participation. Staff must also demonstrate its ability to work with and maximize cooperation between a diverse range of clients such as public housing staff, the research community, law enforcement, and the youth violence prevention community.

(3) Third Criterion: Project Experience (Maximum Points: 30)

(i) The applicant must demonstrate appropriate project experience in successful interdisciplinary work with the target populations and in translating technical information into materials of interest to the targeted groups. Such experience may be demonstrated by positive evaluations from previous clients and objective reviewers or other

demonstrable positive outcomes of previous youth violence prevention work. (Maximum Points: 15)

(ii) Applicants must provide evidence of their success in developing and using a wide variety of methods of providing youth violence prevention TA and training on a nationwide basis. This evidence should include both low-cost and state-of-the-art elements and strategies. In addition, applicants must demonstrate their capacity to recommend and utilize the most cost-effective and productive combination of elements and strategies for youth violence prevention work. (Maximum Points: 15)

(4) Fourth Criterion: Quality of the Plan (Maximum Points: 30)

(i) *Goals and Activities.* (Maximum Points: 9)

The applicant must demonstrate that the activities in the proposed plan will result in the completion of the outlined tasks necessary for achieving the goals of this NOFA.

(ii) *Effective Means.* (Maximum Points: 9)

The applicant must submit a plan which utilizes effective means in completing each of the outlined tasks necessary for achieving the goals of this NOFA. The plan must provide sufficient flexibility to meet goals developed during the implementation of the project.

(iii) *TA and Training.* (Maximum Points: 9)

The applicant must submit a plan detailing successful and appropriate means for TA and training. The methods must be sensitive to cultural diversity, and must provide for the translation of technical information into materials of use and interest to both the public housing and research communities. Furthermore, the activities must be shown to be readily understood, reasonable, and allow for modifications as the project is implemented. They must also be proven to be practical, stimulating and results-oriented.

(iv) *Employing, Training and Contracting with Public Housing Residents and Public Housing Business Concerns.* (Maximum Points: 3)

The applicant may submit a plan for training and employing public housing residents and for contracting with business concerns which provide economic opportunities to public housing residents. Submission of such a plan is not mandated by this NOFA. However, those applicants electing to submit a plan will receive up to 3 points towards their NOFA application score.

(h) Administrative Requirements

(1) Award Period

The Grant will be cost-reimbursable and awarded for two years.

(2) Cooperative Agreement

After the application has been approved and the grant awarded, HUD and the applicant shall enter into a Cooperative Agreement (Form HUD–1044) setting forth the amount of the Cooperative Agreement and its applicable terms, conditions, financial controls, payment mechanism/schedule, and special conditions.

II. Checklist of Application Submission Requirements

(a) Each application must include the items listed in the following format and order:

(1) Cover letter;

(2) Tab 1—Standard Form 424, Application for Federal Assistance. The SF–424 is the face sheet for the application.

(3) Tab 2—Standard Form 424A, Budget Information for the attached program plan and narrative. The applicant must provide a detailed budget for each quarter, with detailed justification for all costs including the basis for computation of the costs for each of the outlined tasks. The applicant must also provide a budget for each major task. The budget should include a narrative explaining the applicant's financial capability (i.e., the fiscal controls and accounting procedures which assure that Federal funds will be properly utilized).

(4) Tab 3—Corporate Qualifications: Applicants must fully describe their corporate structure, their corporate experience in managing a project of this size and scope, and how their corporate structure and experience will contribute to the quality and completion of the proposed work. Applicants must provide evidence of a corporate commitment to equal employment opportunity, and an ability to adapt to the unique characteristics of the clients.

(5) Tab 4—Organizational Qualification: Applicants must fully describe their organizational structure and experience, as well as their staff size and structure, to demonstrate that they are sufficient to effectively implement a project of this size and scope. Applicants should outline a list of housing authorities and research organizations with which the applicant has worked, the dates and numbers of persons involved, any current points of contact, and summaries of any work evaluations.

(6) Tab 5—Staff Qualifications: Applicants must fully describe the capabilities and work experience of the Project Director, and all key staff. Applicants must include a staffing plan to fulfill the requirements of the statement of work, including staff titles and the staff's related educational and professional background, experience, and skills; and the time each staff member will be required to contribute to the project. Applicants must identify the specific personnel responsible for or working on each task. Applicants should describe staff experience with youth violence prevention programs, preferably in public housing. Applicants should describe staff experience with projects requiring the translation of technical information into materials of interest and use to the targeted groups, and the ability to work successfully with culturally diverse populations.

(7) Tab 6—Project Experience. Applicants must fully describe prior experience in converting scientific information into usable material, and in training programs for PHAs or similar groups. Applicants must demonstrate how the combination of their organizational, staff and project experience is sufficient to effectively implement a program of this size and scope. Applicants should outline a list of public housing communities, low-income communities, or other related organizations where similar TA and training was provided, the dates of the TA and/or training, the nature of the TA and/or training, the results of the evaluations, and any current points of contact regarding the work.

(8) Tab 7—Program Implementation Plan. Applicants must submit a plan outlining each task and describe how available staff and financial resources will be allocated to each task. The plan must include an annotated organizational chart depicting the roles and responsibilities of key organizational and functional components and a list of key personnel responsible for managing and implementing the major elements of the program. There must be a time-task plan which clearly identifies the major milestones and products, staff assignments to each task, and schedule for the completion of activities and products. Applicants should discuss the goals, activities and products of each task including the efforts to address issues of cultural diversity and sensitivity, the translation of technical information into useable materials, and efforts to reach the broadest possible range of communities.

(9) Tab 8—Representations, Certifications, and Other Statements of Offerors or Quoters.

(i) Certification Regarding Federal Employment.

(ii) Certification of Procurement Integrity.

(iii) Certification and Disclosure Regarding Payments to Influence Certain Federal Transactions.

(iv) SF–LLL Disclosure of Lobbying Activities.

(v) Certification Regarding Debarment, Suspension, Proposed Debarment, and other Responsibility Matters.

(b) The application should be limited to 25 pages, excluding attachments (e.g., letters of support, data collection forms, résumés, etc.). All material must be typewritten, single-spaced, with type no smaller than 10cpi, on 8.5″ × 11″ paper, with at least 1″ margins, headings, and footers, and printed on one side only.

III. Corrections to Deficient Applications

(a) HUD will notify an applicant, in writing, of any curable technical deficiencies in the application. The applicant must submit corrections in accordance with the information specified in HUD's letter within 14 calendar days from the date of HUD's letter notifying the applicant of any such deficiency.

(b) Curable technical deficiencies relate to items that:

(i) Are not necessary for HUD review under selection criteria/ranking factors; and

(ii) Would not improve the quality of the applicant's program proposal.

IV. Other Matters

(a) Nondiscrimination and Equal Opportunity

The following nondiscrimination and equal opportunity requirements apply:

(1) The requirement of title VIII of the Civil Rights Act of 1968 (42 U.S.C. 3600–20) (Fair Housing Act) and implementing regulations issued at subchapter A of title 24 of the Code of Federal Regulations, as amended by 54 FR 3232 (published January 23, 1989); Executive Order 11063 (Equal Opportunity in Housing) and implementing regulations at 24 CFR part 107; and title VI of the Civil Rights Act of 1964 (42 U.S.C. 2000d–2000d–4) (Nondiscrimination in Federally Assisted Programs) and implementing regulations issued at 24 CFR part 1;

(2) The Indian Civil Rights Act (title II of the Civil Rights Act of 1968) (25 U.S.C. 1301–1303) (ICRA) provides that no Indian tribe in exercising powers of self-government shall deny to any person within its jurisdiction the equal protection of its laws or deprive any person of liberty or property without due process of law. The Indian Civil Rights Act applies to any tribe, band, or other group of Indians subject to the jurisdiction of the United States in the exercise of recognized powers of self-government. The ICRA is applicable in all cases where an IHA has been established by exercise of tribal powers of self-government.

(3) The prohibitions against discrimination on the basis of age under the Age Discrimination Act of 1975 (42 U.S.C. 6101–07) and implementing regulations at 24 CFR part 146, and the prohibitions against discrimination against individuals with disabilities under section 504 of the Rehabilitation Act of 1973 (29 U.S.C. 794) and implementing regulations at 24 CFR part 8;

(4) The requirements of Executive Order 11246 (Equal Employment Opportunity) and the regulations issued under the Order at 41 CFR Chapter 60;

(5) The requirements of the Americans with Disabilities Act of 1990 (42 U.S.C. 12131) and implementing regulations at 29 CFR part 1640, 28 CFR part 35, and 28 CFR part 36.

(6) The requirements of Executive Orders 11625, 12432, and 12138. Consistent with HUD's responsibilities under these Orders, recipients must make efforts to encourage the use of minority and women's business enterprises in connection with funded activities.

(b) Use of Debarred, Suspended, or Ineligible Contractors

Applicants for short-term technical assistance under this NOFA are subject to the provisions of 24 CFR part 24 relating to the employment, engagement of services, awarding of contracts, or funding of any contractors or subcontractors during any period of debarment, suspension, or placement in ineligibility status.

(c) Drug-free Workplace Act of 1988

The requirements of the Drug-Free Workplace Act of 1988 and implementing regulations at 24 CFR part 24, subpart F apply under this notice.

(d) Environmental Impact

In accordance with 40 CFR 1508.4 of the regulations of the Council on Environmental Quality and 24 CFR 50.20(b) of the HUD regulations, the policies and procedures proposed in this document are determined not to have the potential of having a significant impact on the quality of the human environment, and therefore are categorically excluded from the requirements of the National Environmental Policy Act of 1969. Accordingly, a Finding of No Significant Impact is not required.

(e) Federalism Impact

The General Counsel, as the Designated Official under section 6(a) of Executive Order 12612, Federalism, has determined that the provisions of this NOFA do not have federalism implications within the meaning of the Order. The NOFA provides short-term technical assistance to housing authorities and resident organizations to assist them in their youth violence prevention efforts in public housing communities. The involvement of resident organizations should greatly increase the success of the anti-violence efforts under this technical assistance program and therefore should have positive effects on the target population. As such, the program helps housing authorities to combat the problem of youth violence in their communities, but it does not have federalism implications.

(f) Family Impact

The General Counsel, as the Designated Official for Executive Order 12606, the Family, has determined that the provisions of this NOFA have the potential for a positive, although indirect, impact on family formation, maintenance, and general well-being within the meaning of the Order. The NOFA is designed to assist housing authorities and resident organizations in their youth violence prevention efforts by providing short-term technical assistance. HUD expects that the provision of such assistance will better prepare and educate housing authority and resident organization officials to confront the widespread abuse of controlled substances in public housing communities. This, in turn, would indirectly affect the quality of life for housing residents.

(g) Documentation and Public Access Requirements; Applicant/Recipient Disclosures: HUD Reform Act

Disclosures. HUD will make available to the public for five years all applicant disclosure reports (HUD Form 2880) submitted in connection with this NOFA. Update reports (also Form 2880) will be made available along with the applicant disclosure reports, but in no case for a period less than three years. All reports—both applicant disclosures and updates—will be made available in accordance with the Freedom of Information Act (5 U.S.C. 552) and HUD's implementing regulations at 24

CFR part 15. (See 24 CFR subpart C, and the notice published in the **Federal Register** on January 16, 1992 (57 FR 1942) for further information on these disclosure requirements.)

Public Notice. HUD will include the recipients of assistance pursuant to this NOFA in its quarterly **Federal Register** notice of all recipients of HUD assistance awarded on a competitive basis. (See 24 CFR 12.16(b), and the notice published in the **Federal Register** on January 16, 1992 (57 FR 1942), for further information on these requirements.)

(h) Section 103 HUD Reform Act

HUD's regulation implementing section 103 of the Department of Housing and Urban Development Reform Act of 1989 was published May 13, 1991 (56 FR 22088) and became effective on June 12, 1991. That regulation, codified as 24 CFR part 4, applies to the funding competition announced today. The requirements of the rule continue to apply until the announcement of the selection of successful applicants.

HUD employees involved in the review of applications and in the making of funding decisions are limited by part 4 from providing advance information to any person (other than an authorized employee of HUD) concerning funding decisions, or from otherwise giving an applicant an unfair competitive advantage. Persons who apply for assistance in this competition should confine their inquiries to the subject areas permitted under 24 CFR part 4.

Applicants who have questions should contact the HUD Office of Ethics, (202) 708–3815. (This is not a toll-free number.) The Office of Ethics can provide information of a general nature to HUD employees, as well. *However,* a HUD employee who has specific program questions, such as whether particular subject matter can be discussed with persons outside the Department, should contact his or her Regional or Field Counsel, or Headquarters counsel for the program to which the question pertains.

(i) Section 112 HUD Reform Act

Section 13 of the Department of Housing and Urban Development Act contains two provisions dealing with efforts to influence HUD's decisions with respect to financial assistance. The first imposes disclosure requirements on those who are typically involved in these efforts—those who pay others to influence the award of assistance or the taking of a management action by HUD, and those who are paid to provide the influence. The second restricts the payment of fees to those who are paid to influence the award of HUD assistance, if the fees are tied to the number of housing units received, based on the amount of assistance received, or if they are contingent upon the receipt of assistance.

Section 13 was implemented by final rule published in the **Federal Register** on May 17, 1991 (56 FR 22912). If readers are involved in any efforts to influence HUD in these ways, they are urged to read the final rule, particularly the examples contained in Appendix A of the rule.

(j) Prohibition Against Lobbying Activities

The use of funds awarded under this NOFA is subject to the disclosure requirements and prohibitions of section 319 of the Department of Interior and Related Agencies Appropriations Act for Fiscal Year 1990 (31 U.S.C. 1352) (The ''Byrd Amendment'') and the implementing regulations at 24 CFR part 87. These authorities prohibit recipients of federal contracts, grants, or loans from using appropriated funds for lobbying the Executive or Legislative branches of the federal government in connection with a specific contract, grant, or loan. The prohibition also covers the awarding of contracts, grants, cooperative agreements, or loans unless the recipient has made an acceptable certification regarding lobbying.

Under 24 CFR part 87, applicants, recipients, and subrecipients of assistance exceeding $100,000 must certify that no federal funds have been or will be spent on lobbying activities in connection with the assistance. Indian Housing Authorities (IHAs) established by an Indian tribe as a result of the exercise of their sovereign power are excluded from coverage, but IHAs established under state law are not excluded from coverage.

Authority: Departments of Veterans Affairs and Housing and Urban Development, and Independent Agencies Appropriations Act, 1993 (Pub. L. 102–389, approved October 6, 1992); Departments of Veterans Affairs and Housing and Urban Development, and Independent Agencies Appropriations Act, 1995 (Pub. L. 103–327, approved September 28, 1994).

Dated: May 24, 1995.

Joseph Shuldiner,

Assistant Secretary for Public and Indian Housing.

[FR Doc. 95–13459 Filed 6–1–95; 8:45 am]

BILLING CODE 4210–33–M

Reader Aids

Federal Register

Vol. 60, No. 106

Friday, June 2, 1995

INFORMATION AND ASSISTANCE

Federal Register

Index, finding aids & general information	**202–523–5227**
Public inspection announcement line	**523–5215**
Corrections to published documents	**523–5237**
Document drafting information	**523–3187**
Machine readable documents	**523–4534**

Code of Federal Regulations

Index, finding aids & general information	**523–5227**
Printing schedules	**523–3419**

Laws

Public Laws Update Service (numbers, dates, etc.)	**523–6641**
Additional information	**523–5230**

Presidential Documents

Executive orders and proclamations	**523–5230**
Public Papers of the Presidents	**523–5230**
Weekly Compilation of Presidential Documents	**523–5230**

The United States Government Manual

General information	**523–5230**

Other Services

Data base and machine readable specifications	**523–4534**
Guide to Record Retention Requirements	**523–3187**
Legal staff	**523–4534**
Privacy Act Compilation	**523–3187**
Public Laws Update Service (PLUS)	**523–6641**
TDD for the hearing impaired	**523–5229**

ELECTRONIC BULLETIN BOARD

Free **Electronic Bulletin Board** service for Public Law numbers, Federal Register finding aids, and list of documents on public inspection. **202–275–0920**

FAX-ON-DEMAND

You may access our Fax-On-Demand service. You only need a fax machine and there is no charge for the service except for long distance telephone charges the user may incur. The list of documents on public inspection and the daily Federal Register's table of contents are available using this service. The document numbers are 7050-Public Inspection list and 7051-Table of Contents list. The public inspection list will be updated immediately for documents filed on an emergency basis.
NOTE: YOU WILL ONLY GET A LISTING OF DOCUMENTS ON FILE AND NOT THE ACTUAL DOCUMENT. Documents on public inspection may be viewed and copied in our office located at 800 North Capitol Street, N.W., Suite 700. The Fax-On-Demand telephone number is: **301–713–6905**

FEDERAL REGISTER PAGES AND DATES, JUNE

28509–28700.....1
28701–29462.....2

CFR PARTS AFFECTED DURING JUNE

At the end of each month, the Office of the Federal Register publishes separately a List of CFR Sections Affected (LSA), which lists parts and sections affected by documents published since the revision date of each title.

3 CFR

Proclamations:
6806.....28509
Administrative Orders:
Presidential Determination:
No. 95–21 of May 16, 1995.....28699

5 CFR

890.....28511

7 CFR

Ch. VI.....28511
620.....28511
953.....28701
981.....28520
1007.....29436
1093.....29436
1094.....29436
1096.....29436
1108.....29436
1468.....28522
Proposed Rules:
984.....28744
1126.....28745
1280.....28747

9 CFR

Proposed Rules:
3.....28834
308.....28547
310.....28547
318.....28547
320.....28547
325.....28547
326.....28547
327.....28547
381.....28547

14 CFR

39.....28524, 28525, 28527, 28529, 28702, 28715
71.....28531, 28716
97.....28531, 28532
Proposed Rules:
25.....28547, 28550
39.....28761, 28763
71.....28551, 28764
73.....28552
135.....28765

16 CFR

Proposed Rules:
409.....28554

17 CFR

200.....28717
240.....28717

20 CFR

320.....28534
Proposed Rules:
404.....28767
410.....28767

21 CFR

1308.....28718
Proposed Rules:
182.....28555
186.....28555

26 CFR

301.....28719

31 CFR

0.....28535

33 CFR

164.....28834

40 CFR

52.....28720, 28726, 28729
271.....28539
Proposed Rules:
52.....28557, 28772, 28773

41 CFR

Proposed Rules:
201-9.....28560

42 CFR

Proposed Rules:
412.....29202
413.....29202
424.....29202
485.....29202
489.....29202

43 CFR

Public Land Order:
7143.....28540
7144.....28541
7145.....28541
7146.....28731
Proposed Rules:
11.....28773

44 CFR

64.....28732

45 CFR

1357.....28735

47 CFR

65.....28542
74.....28546
Proposed Rules:
61.....28774
64.....28774
80.....28775

48 CFR

933.....28737

970.....28737

49 CFR

Proposed Rules:
571.....28561

50 CFR

227.....28741
Proposed Rules:
285.....28776