6–27–96
Vol. 61 No. 125
Pages 33303–33640

federal register

Thursday
June 27, 1996

Briefings on How To Use the Federal Register
For information on briefings in Washington, DC, see announcement on the inside cover of this issue.

FEDERAL REGISTER Published daily, Monday through Friday, (not published on Saturdays, Sundays, or on official holidays), by the Office of the Federal Register, National Archives and Records Administration, Washington, DC 20408, under the Federal Register Act (49 Stat. 500, as amended; 44 U.S.C. Ch. 15) and the regulations of the Administrative Committee of the Federal Register (1 CFR Ch. I). Distribution is made only by the Superintendent of Documents, U.S. Government Printing Office, Washington, DC 20402.

The Federal Register provides a uniform system for making available to the public regulations and legal notices issued by Federal agencies. These include Presidential proclamations and Executive Orders and Federal agency documents having general applicability and legal effect, documents required to be published by act of Congress and other Federal agency documents of public interest. Documents are on file for public inspection in the Office of the Federal Register the day before they are published, unless earlier filing is requested by the issuing agency.

The seal of the National Archives and Records Administration authenticates this issue of the Federal Register as the official serial publication established under the Federal Register Act. 44 U.S.C. 1507 provides that the contents of the Federal Register shall be judicially noticed.

The Federal Register is published in paper, 24x microfiche and as an online database through *GPO Access*, a service of the U.S. Government Printing Office. The online database is updated by 6 a.m. each day the Federal Register is published. The database includes both text and graphics from Volume 59, Number 1 (January 2, 1994) forward. Free public access is available on a Wide Area Information Server (WAIS) through the Internet and via asynchronous dial-in. Internet users can access the database by using the World Wide Web; the Superintendent of Documents home page address is http://www.access.gpo.gov/su__docs/, by using local WAIS client software, or by telnet to swais.access.gpo.gov, then login as guest, (no password required). Dial-in users should use communications software and modem to call (202) 512–1661; type swais, then login as guest (no password required). For general information about *GPO Access*, contact the *GPO Access* User Support Team by sending Internet e-mail to gpoaccess@gpo.gov; by faxing to (202) 512–1262; or by calling (202) 512–1530 between 7 a.m. and 5 p.m. Eastern time, Monday–Friday, except for Federal holidays.

The annual subscription price for the Federal Register paper edition is $494, or $544 for a combined Federal Register, Federal Register Index and List of CFR Sections Affected (LSA) subscription; the microfiche edition of the Federal Register including the Federal Register Index and LSA is $433. Six month subscriptions are available for one-half the annual rate. The charge for individual copies in paper form is $8.00 for each issue, or $8.00 for each group of pages as actually bound; or $1.50 for each issue in microfiche form. All prices include regular domestic postage and handling. International customers please add 25% for foreign handling. Remit check or money order, made payable to the Superintendent of Documents, or charge to your GPO Deposit Account, VISA or MasterCard. Mail to: New Orders, Superintendent of Documents, P.O. Box 371954, Pittsburgh, PA 15250–7954.

There are no restrictions on the republication of material appearing in the Federal Register.

How To Cite This Publication: Use the volume number and the page number. Example: 61 FR 12345.

SUBSCRIPTIONS AND COPIES

PUBLIC	
Subscriptions:	
Paper or fiche	202–512–1800
Assistance with public subscriptions	512–1806
General online information	202–512–1530
Single copies/back copies:	
Paper or fiche	512–1800
Assistance with public single copies	512–1803
FEDERAL AGENCIES	
Subscriptions:	
Paper or fiche	523–5243
Assistance with Federal agency subscriptions	523–5243

For other telephone numbers, see the Reader Aids section at the end of this issue.

FEDERAL REGISTER WORKSHOP

THE FEDERAL REGISTER: WHAT IT IS AND HOW TO USE IT

FOR: Any person who uses the Federal Register and Code of Federal Regulations.

WHO: Sponsored by the Office of the Federal Register.

WHAT: Free public briefings (approximately 3 hours) to present:

1. The regulatory process, with a focus on the Federal Register system and the public's role in the development of regulations.
2. The relationship between the Federal Register and Code of Federal Regulations.
3. The important elements of typical Federal Register documents.
4. An introduction to the finding aids of the FR/CFR system.

WHY: To provide the public with access to information necessary to research Federal agency regulations which directly affect them. There will be no discussion of specific agency regulations.

WASHINGTON, DC

[Two Sessions]

WHEN: July 9, 1996 at 9:00 am, and July 23, 1996 at 9:00 am.

WHERE: Office of the Federal Register Conference Room, 800 North Capitol Street, NW., Washington, DC (3 blocks north of Union Station Metro)

RESERVATIONS: 202–523–4538

Printed on recycled paper containing 100% post consumer waste

Contents

Federal Register
Vol. 61, No. 125
Thursday, June 27, 1996

Agency for Toxic Substances and Disease Registry
NOTICES
Superfund program:
Hazardous substances priority list (toxicological profiles)
Minimum risk levels; republication, 33511–33520

Agricultural Marketing Service
PROPOSED RULES
Papayas grown in Hawaii, 33388

Agriculture Department
See Agricultural Marketing Service
See Animal and Plant Health Inspection Service
See Commodity Credit Corporation
See Farm Service Agency
See Food and Consumer Service
See Forest Service
See Rural Business-Cooperative Service
See Rural Utilities Service
NOTICES
Import quotas and fees:
Upland cotton, 33481–33484

Air Force Department
NOTICES
Base realignment and closure:
Surplus Federal property—
McClellan Air Force Base, CA, 33493

Animal and Plant Health Inspection Service
NOTICES
Environmental statements; availability, etc.:
Nonregulated status determinations—
Asgrow Seed Co.; genetically engineered squash line, 33484–33485

Antitrust Division
NOTICES
Competitive impact statements and proposed consent judgments:
Georgia-Pacific Corp., 33538–33539

Army Department
PROPOSED RULES
Military traffic management:
Motor common carriers of perishable subsistence and bulk fuel; cargo insurance requirements, 33409–33414
NOTICES
Meetings:
Yakima Training Center Cultural and Natural Resources Committee Policy Committee, 33493
Patent licenses; non-exclusive, exclusive, or partially exclusive:
Electrochemical capacitor technology, 33494

Arts and Humanities, National Foundation
See National Foundation on the Arts and the Humanities

Centers for Disease Control and Prevention
NOTICES
Grants and cooperative agreements; availability, etc.:
Control of spread of antimicrobial resistance in community-acquired bacterial pathogens; applied research in emerging infections, 33520–33523
Deer mouse ecology in peridomestic settings, 33523–33524
Emerging infections program, 33524–33528
Pathogenesis of measles infections and development of improved measles vaccines; primate model, 33528–33530
Meetings:
Disease, Disability, and Injury Prevention and Control special emphasis panel, 33531

Civil Rights Commission
NOTICES
Meetings; State advisory committees:
North Carolina, 33489–33490

Coast Guard
RULES
Regattas and marine parades:
First Coast Guard District fireworks displays, 33371–33372

Commerce Department
See Foreign-Trade Zones Board
See International Trade Administration
See National Oceanic and Atmospheric Administration

Commodity Credit Corporation
RULES
Loan and purchase programs:
Price support levels—
Tobacco, 33303–33304

Defense Department
See Air Force Department
See Army Department
See Navy Department

Employment and Training Administration
NOTICES
Labor surplus areas classifications:
Annual list, 33540

Employment Standards Administration
NOTICES
Agency information collection activities:
Proposed collection; comment request, 33540–33541

Energy Department
See Federal Energy Regulatory Commission

Environmental Protection Agency
RULES
Air quality implementation plans; approval and promulgation; various States:
Georgia, 33372–33373

Toxic substances:
Significant new uses—
Cyclohexanecarbonitrile, 1,3,3-trimethyl-5-oxo, 33373–33374
Ethane, 1,1,1 trifluoro-, 33374–33375
Testing requirements—
Mesityl oxide; withdrawn, 33375–33376
PROPOSED RULES
Air pollution; standards of performance for new stationary sources:
Nonmetallic mineral processing plants, 33415–33421
Air pollution control; new motor vehicles and engines:
Highway heavy-duty engines; emissions control, 33421–33469
Air quality implementation plans; approval and promulgation; various States:
Georgia, 33414–33415
Pesticides; tolerances in food, animal feeds, and raw agricultural commodities:
Glyphosate, 33469–33474
Superfund program:
Toxic chemical release reporting; community right-to-know—
Metal mining, coal mining, etc.; industry group list additions, 33588–33618
NOTICES
Meetings:
Emergency Planning and Community Right-to-Know; reporting requirements; industry group list additions, 33619

Farm Service Agency
NOTICES
Agency information collection activities:
Proposed collection; comment request, 33485–33486

Federal Aviation Administration
RULES
Airworthiness directives:
Fokker, 33305–33308
PROPOSED RULES
Class E airspace, 33390–33391
NOTICES
Acquisition Management System; availability; correction, 33572
Advisory circulars; availability, etc.:
Aircraft—
Tundra tires, 33581–33582
Environmental statements; availability, etc.:
Toledo Express Airport, OH, 33572
Meetings:
Aviation Rulemaking Advisory Committee, 33572–33573
Passenger facility charges; applications, etc.:
Boise Air Terminal, ID, 33573–33574
Manchester Airport, NH, 33574

Federal Communications Commission
RULES
Radio stations; table of assignments:
Kansas, 33377
PROPOSED RULES
Radio broadcasting:
Grandfathered short-spaced FM stations, 33474–33476
NOTICES
World Radiocommunication Conference-97 Advisory Committee; comment submission procedures, 33507–33508

Federal Election Commission
NOTICES
Special elections; filing dates:
Kansas, 33508–33509

Federal Energy Regulatory Commission
NOTICES
Electric rate and corporate regulation filings:
Coastal Suzhou Power Ltd. et al., 33497–33499
Texican Energy Ventures, Inc., et al., 33499–33502
Environmental statements; availability, etc.:
Wisconsin Public Service Corp., 33502
Hydroelectric applications, 33502–33507
Applications, hearings, determinations, etc.:
Tuscarora Gas Transmission Co., 33496
Williams Natural Gas Co., 33496–33497

Federal Trade Commission
RULES
Trade regulation rules:
Incandescent lamp (light bulb) industry; CFR part removed; Federal regulatory reform, 33308–33313
NOTICES
Prohibited trade practices:
Columbia/HCA HealthCare Corp., 33509
Giant Food, Inc., 33509
Illinois Tool Works Inc., 33509
KKR Associates, L.P., 33509–33510
Mannesmann, A.G., 33510
Service Corp. International, 33510
Valspar Corp. et al., 33510

Fish and Wildlife Service
NOTICES
Environmental statements; availability, etc.:
Incidental take permits—
Massachusetts; Atlantic Coast piping plover, 33534

Food and Consumer Service
NOTICES
Agency information collection activities:
Proposed collection; comment request, 33486–33488

Foreign-Trade Zones Board
NOTICES
Applications, hearings, determinations, etc.:
Delaware
Star Enterprise; oil refinery complex, 33490
Hawaii, 33490–33491
South Carolina, 33491
Texas
Marathon Oil Co.; oil refinery complex, 33491

Forest Service
NOTICES
Environmental statements; notice of intent:
Tongass National Forest, AK, 33488–33489
Meetings:
Deschutes Provincial Interagency Executive Committee Advisory Committee, 33489

Health and Human Services Department
See Agency for Toxic Substances and Disease Registry
See Centers for Disease Control and Prevention
See Health Care Financing Administration
NOTICES
Meetings:
Dietary Supplement Labels Commission, 33510–33511

Health Care Financing Administration
NOTICES
Agency information collection activities:
Submission for OMB review; comment request, 33532–33533
Medicaid:
Demonstration project proposals, new and pending—May, 33531–33532
Meetings:
Practicing Physicians Advisory Council, 33532

Housing and Urban Development Department
NOTICES
Grants and cooperative agreements; availability, etc.:
Continuum of care systems—
Homeless individuals; supportive housing, shelter plus care, and single room occupancy dwellings rehabilitation, 33533–33534

Immigration and Naturalization Service
RULES
Immigration:
Immigration petitions—
Priority dates for employment-based petitions, 33304–33305

Indian Affairs Bureau
NOTICES
Tribal government:
Retraction of 1979 decision of Deputy Commissioner of Indian Affairs to deal with Delaware Tribe of Eastern Oklahoma only for claims purposes, 33534–33535

Interior Department
See Fish and Wildlife Service
See Indian Affairs Bureau
See Land Management Bureau
NOTICES
Yavapai-Prescott Indian Tribe Water Rights Settlement Act of 1994; implementation; statement of findings, 33536

Internal Revenue Service
RULES
Income taxes:
Consolidated return regulations—
Consolidated groups; net operating loss carryforwards and built-in losses and credits following ownership change; limitations, 33335–33365
Losses and deductions; use limitations, 33321–33335
Short taxable years and controlled groups, 33313–33321
Procedure and administration:
Extensions of time to make elections, 33365–33370
PROPOSED RULES
Income taxes:
Amortizable bond premium, 33396–33405
Consolidated return regulations—
Consolidated groups; net operating loss carryforwards and built-in losses and credits following ownership change; limitations; cross reference, 33395–33396
Losses and deductions; use limitations; cross reference, 33393–33395
Short taxable years and controlled groups; cross reference, 33391–33393
Tax-exempt bonds; arbitrage restrictions, 33405–33407
Procedure and administration:
Extensions of time to make elections; cross reference, 33408–33409

International Trade Administration
NOTICES
Antidumping:
Welded carbon steel standard pipes and tubes from—India, 33492

International Trade Commission
NOTICES
Meetings; Sunshine Act, 33537–33538

Justice Department
See Antitrust Division
See Immigration and Naturalization Service

Labor Department
See Employment and Training Administration
See Employment Standards Administration
See Occupational Safety and Health Administration
NOTICES
Agency information collection activities:
Submission for OMB review; comment request, 33539–33540

Land Management Bureau
NOTICES
Alaska Native claims selection:
Doyon, Ltd., 33535
Meetings:
Eastern Washington Resource Advisory Council, 33535
Resource advisory councils—
Utah, 33536
Oil and gas leases:
Colorado, 33535–33536
Realty actions; sales, leases, etc.:
Arizona, 33536–33537
Utah, 33537
Survey plat filings:
Idaho, 33537

National Foundation on the Arts and the Humanities
NOTICES
Grants and cooperative agreements; availability, etc.:
Arts and substance abuse prevention publication, 33548

National Highway Traffic Safety Administration
NOTICES
Grants and cooperative agreements; availability, etc.:
National occupant protection program, 33574–33577
Motor vehicle safety standards:
Nonconforming vehicles—
Importation eligibility; determinations, 33577

National Institute for Literacy
NOTICES
Agency information collection activities:
Submission for OMB review; comment request, 33542–33548

National Oceanic and Atmospheric Administration
RULES
Endangered and threatened species:
Bering Sea and Aleutian Islands and Gulf of Alaska groundfish, 33382–33386
Sea turtle conservation; shrimp trawling requirements—
Additional turtle excluder device requirements within statistical zones, 33377–33382
Fishery conservation and management:
Bering Sea and Aleutian Islands groundfish, 33386

Gulf of Alaska groundfish, 33387
Summer flounder, 33382
NOTICES
Meetings:
Gulf of Mexico Fishery Management Council, 33490
Gulf of Mexico Fishery Management Council; correction, 33492
South Atlantic Fishery Management Council, 33492–33493

National Science Foundation
NOTICES
Committees; establishment, renewal, termination, etc.:
Graduate Education Special Emphasis Panel et al., 33548–33549
Meetings:
Conference on shaping the future; strategies for revitalizing undergraduate education, 33549
Elementary, Secondary and Informal Education Special Emphasis Panel, 33549
Science and Technology Centers Program Advisory Committee, 33549
Social, Behavioral and Economic Research Special Emphasis Panel, 33549–33550

Navy Department
NOTICES
Inventions, Government-owned; availability for licensing, 33494–33496

Nuclear Regulatory Commission
PROPOSED RULES
Rulemaking petitions:
IsoStent, Inc., 33388–33390

Occupational Safety and Health Administration
NOTICES
Meetings:
Occupational Safety and Health Advisory Committee, 33541–33542

Personnel Management Office
NOTICES
Agency information collection activities:
Proposed collection; comment request, 33550
Submission for OMB review; comment request, 33550
Meetings:
Federal Prevailing Rate Advisory Committee, 33550

Public Health Service
See Agency for Toxic Substances and Disease Registry
See Centers for Disease Control and Prevention

Railroad Retirement Board
NOTICES
Agency information collection activities:
Submission for OMB review; comment request, 33550–33551

Research and Special Programs Administration
PROPOSED RULES
Pipeline safety:
Natural gas distribution systems; excess flow valve performance standards; customer notification, 33476–33480

Rural Business-Cooperative Service
NOTICES
Grants and cooperative agreements; availability, etc.:
Rural business enterprise program; correction, 33489

Rural Utilities Service
RULES
Rural development:
Distance learning and telemedicine grant program, 33622–33638
NOTICES
Grants and cooperative agreements; availability, etc.:
Distance learning and telemedicine program, 33639

Securities and Exchange Commission
NOTICES
Self-regulatory organizations; proposed rule changes:
American Stock Exchange, Inc., 33558–33561
Chicago Board Options Exchange, Inc., 33561–33564
Government Securities Clearing Corp., 33564
National Securities Clearing Corp., 33565–33566
Pacific Stock Exchange, Inc., 33566–33570
Applications, hearings, determinations, etc.:
Public utility holding company filings, 33551–33555
Trend Capital Management, Inc., 33555–33557
Van Eck Trust, 33557

Small Business Administration
NOTICES
Disaster loan areas:
Illinois, 33570
West Virginia, 33570
License surrenders:
Bartlesville Investment Corp., 33570
Fluid Capital Corp., 33570
Fluid Financial Corp., 33570–33571
Inverness Capital Corp., 33571
Investment Capital Inc., 33571
Venture Capital Corp. of New Mexico, 33571
Watchung Capital Corp., 33571

Social Security Administration
NOTICES
Social security supplementary agreement between U.S. and Germany; entry into force, 33570

State Department
RULES
International Traffic in Arms Regulations; amendments
Afghanistan; defense articles and services importation and exportation, etc.; prohibition, 33313

Surface Transportation Board
NOTICES
Railroad operation, acquisition, construction, etc.:
A&G Railroad, L.L.C., et al., 33579–33580
Durden, K. Earl, 33580
R.J. Corman Railroad Co./Western Ohio Line, 33580–33581
Railroad services abandonment:
Western Kentucky Railway, L.L.C., 33581

Tennessee Valley Authority
NOTICES
Agency information collection activities:
Proposed collection; comment request, 33571–33572

Toxic Substances and Disease Registry Agency
See Agency for Toxic Substances and Disease Registry

Transportation Department
See Coast Guard
See Federal Aviation Administration
See National Highway Traffic Safety Administration
See Research and Special Programs Administration
See Surface Transportation Board

Treasury Department
See Internal Revenue Service

United States Information Agency
NOTICES
Grants and cooperative agreements; availability, etc.:
International educational and cultural activities—Discretionary program, 33582–33586

Separate Parts In This Issue

Part II
Environmental Protection Agency, 33588–33619

Part III
Department of Agriculture, Rural Utilities Service, 33622–33639

Reader Aids
Additional information, including a list of public laws, telephone numbers, reminders, and finding aids, appears in the Reader Aids section at the end of this issue.

Electronic Bulletin Board
Free Electronic Bulletin Board service for Public Law numbers, Federal Register finding aids, and a list of documents on public inspection is available on 202–275–1538 or 275–0920.

CFR PARTS AFFECTED IN THIS ISSUE

A cumulative list of the parts affected this month can be found in the Reader Aids section at the end of this issue.

7 CFR
1464.....33303
1703.....33622
Proposed Rules:
928.....33388

8 CFR
204.....33304

10 CFR
Proposed Rules:
35.....33388

14 CFR
39.....33305
Proposed Rules:
71.....33390

16 CFR
409.....33308

22 CFR
126.....33313

26 CFR
1 (3 documents) 33321
33335,
301.....33365
602 (4 documents) 33313
33321, 33335, 33365
Proposed Rules:
1 (5 documents) 33391
33393, 33395, 33396,33405
301.....33408

32 CFR
Proposed Rules:
619.....33409

33 CFR
100.....33371

40 CFR
52.....33372
721 (2 documents) 33373
33374
799.....33375
Proposed Rules:
52.....33414
60.....33415
86.....33421
180L33469
185.....33469
186.....33469
372.....33588

47 CFR
73.....33377
Proposed Rules:
73.....33474

49 CFR
Proposed Rules:
192.....33475

50 CFR
217.....33377
227.....33377
625.....33382
679 (3 documents) 33382
33386

Rules and Regulations

Federal Register
Vol. 61, No. 125
Thursday, June 27, 1996

This section of the FEDERAL REGISTER contains regulatory documents having general applicability and legal effect, most of which are keyed to and codified in the Code of Federal Regulations, which is published under 50 titles pursuant to 44 U.S.C. 1510.

The Code of Federal Regulations is sold by the Superintendent of Documents. Prices of new books are listed in the first FEDERAL REGISTER issue of each week.

DEPARTMENT OF AGRICULTURE

Commodity Credit Corporation

7 CFR Part 1464

RIN 0560–AE41

Tobacco—Tobacco Loan Program

AGENCY: Commodity Credit Corporation, USDA.

ACTION: Final rule.

SUMMARY: This final rule clarifies the regulations for price support loans for tobacco to specify that a refund will be due on ''nested'' tobacco whether or not the producer knew the tobacco was nested. This modification is intended to insure that producers take responsibility for, and are the insurers of, the quality of the tobacco placed for price support and that price support is limited to normal, non-adulterated lots based on true weights. This final rule adopts, the proposed rule published in the Federal Register on February 12, 1996.

EFFECTIVE DATE: June 27, 1996.

FOR FURTHER INFORMATION CONTACT: David W. Anderson, Assistant to the Director, Tobacco and Peanuts Division, Farm Services Agency (FSA), United States Department of Agriculture (USDA) AG Code 0514, PO Box 2415, Washington, DC., telephone (202) 690–2518.

SUPPLEMENTARY INFORMATION

Executive Order 12866

This final rule has been determined to be not significant for purposes of Executive Order 12866 and therefore has not been reviewed by the Office of Management and Budget (OMB).

Regulatory Flexibility Act

It has been determined that the Regulatory Flexibility Act is not applicable to this rule since the Commodity Credit Corporation (CCC) is not required by 5 USC 553 or any other provision of law to publish a notice of proposed rulemaking with respect to the subject matter of this rule.

Federal Assistance Program

The title and number of the Federal Assistance Program, as found in the Catalog of Federal Domestic Assistance, to which this rule applies are: Commodity Loans and Purchases—10.051.

Environmental Evaluation

It has been determined by an environmental evaluation that this action will have no significant impact on the quality of the human environment. Therefore, neither an environmental assessment nor environment impact statement is needed.

Executive Order 12372

This program/activity is not subject to the provisions of Executive Order 12372, which requires intergovernmental consultation with State and local officials. See the notice related to 7 CFR part 3015, subpart V published at 48 FR 2915 (June 24, 1983).

Executive Order 12778

This final rule has been reviewed in accordance with Executive Order 12778. The provisions of this final rule are not retroactive and preempt State laws to the extent that such laws are inconsistent with the provisions of this final rule. Before any legal action is brought regarding determinations made under provision of 7 CFR part 1464, the administrative appeal provisions set forth at 7 CFR part 780 must be exhausted.

Paperwork Reduction Act

This final rule does not change the information collection requirements that have been approved by OMB and assigned control number 0560–0058.

Background

Nested tobacco is tobacco in a lot containing a ''nest'' of inferior tobacco or foreign material, presumably, to increase the payment or loan weight of the lot. A formal definition of nesting is found in regulations codified at 7 CFR part 29 and that definition is incorporated in the rules for the tobacco price support program found at 7 CFR part 1464.

In a proposed rule published on February 12, 1996, it was proposed that the regulations in part 1464 be clarified to make explicit that a refund will be due from support loan recipients on individual nested lot in all cases of nesting, whether the nesting was ''knowingly'' done or not by the loan recipient. However, the proposal would have allowed the FSA county committee, with the concurrence of the FSA State committee, to reduce the amount of the refund demanded, in accordance with guidelines of the FSA's Deputy Administrator for Farm Programs. This allowance was proposed to permit adjustments to avoid undue hardship to producers. The proposal did not adjust the terms under which a producer could lose eligibility for loans for an entire crop year due to nesting. That loss could still require that a violation be ''knowingly'' committed by a loan recipient.

Discussion of Comments

Five public comments were received, three in favor of the proposed rule and two opposed. One of the negative comments suggested that the grading of tobacco was a subjective matter and that a mistake on the part of the producer could be construed to be nesting. The other negative comment indicated that with increased size of operations that laborers might mix some tobacco, thus causing nesting to take place and that producers should be forgiven and not be held as being the responsible party. The other comments received supported the proposed rule as written, with one respondent suggesting that a penalty be established only on the nest and that the rate of penalty be higher than set out in current regulations.

After consideration of all comments received, CCC has determined that the proposed rule which was published at 7 CFR part 1464 on February 12, 1996, should be adopted as a final rule without change. While some producers may have more difficulty than others in controlling their operations, it still is the responsibility of the producer to make grade on tobacco offered for prrice support. The price support program is not an insurance program. If a full refund is not warranted, then an accommodation can be considered under the relief provisions of the rule. The rule is not intended to serve as a penalty, but only to insure that only

marketable tobacco is offered for price support and to insure that the amount of support made available is not excessive.

List of Subjects in 7 CFR Part 1464

Agriculture, Assessments, Loan program, Price support program, Tobacco, Warehouses.

Accordingly, 7 CFR Part 1464 is amended as follows:

PART 1464—TOBACCO

1. The authority citation for part 1464 continues to read as follows:

Authority: 7 U.S.C. 1421, 1423, 1441, 1445, 1445–1 and 1445–2; 15 U.S.C. 714b, 714c.

2. Section 1464.8 is amended by revising the introductory text to read as follows:

§ 1464.8 Eligible tobacco.

Eligible tobacco for the purpose of pledging such tobacco as collateral for a price support loan is any tobacco of a kind for which price support is available, as provided in § 1464.2, that is in sound and merchantable condition, is not nested as defined in 7 CFR part 29, and:

* * * * *

3. Section 1464.9 is amended by revising paragraph (a) to read as follows:

§ 1464.9 Refund of price support advance.

* * * * *

(a) Received a price support advance on tobacco that was nested, as defined in part 29 of this title or otherwise not eligible for price support. The county committee, with concurrence of a State Committee Representative, may reduce the refund with respect to tobacco otherwise required in this part, in accordance with guidelines issued by the Deputy Administrator.

* * * * *

Signed at Washington, DC on June 20, 1996.

Bruce R. Weber,

Acting Executive Vice President, Commodity Credit Corporation.

[FR Doc. 96–16355 Filed 6–26–96; 8:45 am]

BILLING CODE 3410–05–P

DEPARTMENT OF JUSTICE

Immigration and Naturalization Service

8 CFR Part 204

[INS No. 1647–95]

RIN 1115–AE24

Priority Dates for Employment-Based Petitions

AGENCY: Immigration and Naturalization Service, Justice.

ACTION: Interim rule with request for comments.

SUMMARY: This interim rule amends the Immigration and Naturalization Service (Service) regulations by eliminating the requirement that an application for labor certification filed with a state employment office before October 1, 1991, must be filed with the Service in connection with a petition filed under section 203(b) of the Immigration and Nationality Act (Act) before October 1, 1993, in order to maintain a pre-October 1, 1991, priority date. This rule implements section 218 of the Immigration and Nationality Technical Corrections Act of 1994 (INTCA), which amended section 161(c)(1) of the Immigration Act of 1990 (IMMACT). This rule is necessary to implement a statutory change.

EFFECTIVE DATE: June 27, 1996. Written comments must be submitted on or before August 26, 1996.

ADDRESSES: Please submit written comments, in triplicate, to the Director, Policy Directives and Instructions Branch, Immigration and Naturalization Service, 425 I Street NW, Room 5307, Washington, DC 20536. To ensure proper handling please reference INS No. 1647–95 on your correspondence. Comments are available for public inspection at the above address by calling (202) 514–3048 to arrange for an appointment.

FOR FURTHER INFORMATION CONTACT: Michael W. Straus, Senior Adjudications Officer, Adjudications Division, Immigration and Naturalization Service, 425 I Street, NW., Room 3214, Washington, DC 20536, telephone (202) 514–3228.

SUPPLEMENTARY INFORMATION: On November 29, 1991, the Service published a final rule implementing the new employment-based immigrant categories created by the Immigration Act of 1990 (IMMACT), Pub. L. 101–649. See 56 FR 60897–913. The final rule provided that the priority date for an employment-based petition accompanied by a labor certification shall be the date on which any office within the employment service system of the Department of Labor accepted the request for labor certification. See 8 CFR 204.5(d). A priority date determines when an alien, who has had an immigrant visa petition approved on his or her behalf, may submit his or her application for permanent resident status or an immigrant visa.

Subsequent to the promulgation of the November 29, 1991, regulation, the President signed into law the Miscellaneous and Technical Immigration and Naturalization Amendments of 1991 (MTINA), Pub. L. 102–232, dated December 12, 1991. Section 302(e)(2) of the MTINA, which amended section 161(c)(1) of IMMACT addressed, among other things, the transition of labor certifications filed before October 1, 1991, into the new employment-based immigrant visa categories created by IMMACT. In this regard, section 302(e)(2) of MTINA provides that, in order to maintain the priority date of a labor certification application filed in connection with an employment-based petition which was submitted to a state employment office before October 1, 1991, the employer must file an employment-based petition before October 1, 1993. Section 302(e)(2) of MTINA further provides that if the Department of Labor approves a pre-October 1, 1991, labor certification application subsequent to October 1, 1993, the employer must file a petition under section 203(b) of the Act within 60 days of the date of certification to maintain the pre-October 1, 1991, priority date.

To implement section 302(e)(2) of MTINA, the Service issued an interim rule with request for comments on January 5, 1994, at 59 FR 501–502. This interim rule provided that in the case of labor certifications accepted for processing by any office within the employment service system of the Department of Labor before October 1, 1991, the sponsoring employer must file a petition under section 203(b) of the Act before October 1, 1993, or within 60 days after the date of certification by the Department of Labor, whichever is later, in order to maintain the pre-October 1, 1991, priority date. On October 11, 1994, the Service issued a final rule which adopted the interim rule as final. See 59 FR 51358–60.

On October 25, 1994, the President signed into law the Immigration and Nationality Technical Corrections Act of 1994 (INTCA), Pub. L. 103–416. Section 218 of INTCA further amends section 161(c)(1) of IMMACT by removing the reference to priority dates for pre-October 1, 1991, labor certifications. This section effectively repealed section

302(e)(2) of MITINA and, therefore, the recent changes to 8 CFR 204.5(d). The effect of this legislation is that the priority date for all employment-based petitions, regardless of when they are filed, shall be the date on which the state employment office accepted the labor certification application. In light of the above, 8 CFR 204.5(d) will be amended by removing the sentence which refers to labor certifications filed before October 1, 1991.

The Service's implementation of this rule as an interim rule, with provision for post-promulgation public comment, is based on the ''good cause'' exceptions found at 5 U.S.C. 553 (b)(3)(B), (d)(3). The reason and necessity for immediate implementation of this interim rule is as follows: This rule implements section 218 of INTCA, which became effective upon enactment, by removing a sentence in the regulations which is inconsistent with that section. Immediate promulgation of this rule is necessary to ensure that beneficiaries of employment-based petitions may avail themselves of a pre-October 1, 1991 priority date. As this rule benefits a very limited number of beneficiaries, it should have no adverse impact on other beneficiaries of employment-based petitions.

Regulatory Flexibility Act

The Commissioner of the Immigration and Naturalization Service, in accordance with the Regulatory Flexibility Act (5 U.S.C. 605(b)), has reviewed this regulation and, by approving it, certifies that this rule will not have a significant economic impact on a substantial number of small entities. This rule affects only a very limited number of petitioners and aliens who filed requests for labor certifications prior to October 1, 1991.

Executive Order 12866

This rule is not considered by the Department of Justice, Immigration and Naturalization Service, to be a ''significant regulatory action'' under Executive Order 12866, section 3(f), Regulatory Planning and Review, and the Office of Management and Budget has waived its review process under section 6(a)(3)(A).

Executive Order 12612

The regulation will not have substantial direct effects on the States, on the relationship between the National Government and the States, or on the distribution of power and responsibilities among the various levels of government. Therefore, in accordance with Executive Order 12612, it is determined that this rule does not have sufficient Federalism implications to warrant the preparation of a Federalism Assessment.

List of Subjects in 8 CFR Part 204

Administrative practice and procedure, Aliens, Employment, Immigration, Petitions.

Accordingly, part 204 of chapter I of title 8 of the Code of Federal Regulations is amended as follows:

PART 204—IMMIGRANT PETITIONS

1. The authority citation for part 204 continues to read as follows:

Authority: 8 U.S.C. 1101, 1103, 1151, 1153, 1154, 1182, 1186a, 1255; 8 CFR part 2.

§ 204.5 [Amended]

2. In § 204.5, paragraph (d) is amended by removing the second sentence.

Dated: June 13, 1996.

Doris Meissner,

Commissioner, Immigration and Naturalization Service.

[FR Doc. 96–16347 Filed 6–26–96; 8:45 am]

BILLING CODE 4410–10–M

DEPARTMENT OF TRANSPORTATION

Federal Aviation Administration

14 CFR Part 39

[Docket No. 95–NM–224–AD; Amendment 39–9682; AD 96–13–13]

RIN 2120–AA64

Airworthiness Directives; Fokker Model F28 Mark 0100 and 0070 Series Airplanes

AGENCY: Federal Aviation Administration, DOT.

ACTION: Final rule.

SUMMARY: This amendment supersedes an existing airworthiness directive (AD), applicable to certain Fokker Model F28 Mark 0100 series airplanes, that currently requires certain maximum brake wear limits to be incorporated into the FAA-approved maintenance inspection program. That AD also currently requires that the Airplane Flight Manual (AFM) be revised to include certain procedures concerning operations in the event of a rejected takeoff (RTO). This amendment requires the incorporation of new maximum brake wear limits for additional brake units into the FAA-approved maintenance program. This action also deletes the previous requirement for the AFM revision. This amendment is prompted by the determination of the maximum allowable brake wear limits for additional brake unit part numbers. The actions specified by the AD are intended to prevent the loss of brake effectiveness during a high energy RTO.

EFFECTIVE DATE: August 1, 1996.

ADDRESSES: Information pertaining to this rulemaking action may be examined at the Federal Aviation Administration (FAA), Transport Airplane Directorate, Rules Docket, 1601 Lind Avenue, SW., Renton, Washington.

FOR FURTHER INFORMATION CONTACT: Ruth Harder, Aerospace Engineer, Standardization Branch, ANM–113, FAA, Transport Airplane Directorate, 1601 Lind Avenue, SW., Renton, Washington 98055–4056; telephone (206) 227–1721; fax (206) 227–1149.

SUPPLEMENTARY INFORMATION: A proposal to amend part 39 of the Federal Aviation Regulations (14 CFR part 39) by superseding AD 94–06–06, amendment 39–8854 (59 FR 11713, March 14, 1994), which is applicable to certain Fokker Model F28 Mark 0100 series airplanes, was published in the Federal Register on February 12, 1996 (61 FR 5331). The action proposed to require the incorporation of new maximum brake wear limits for additional brake units into the FAA-approved maintenance program. The action also proposed to delete a previous requirement for a revision to the Airplane Flight Manual (AFM) that pertained to reporting certain rejected takeoff conditions to maintenance.

Interested persons have been afforded an opportunity to participate in the making of this amendment. Due consideration has been given to the comments received.

Request To Extend Compliance Time

One commenter requests that the proposed compliance time of 180 days for incorporating the maximum brake wear pin limits into the maintenance program be extended to 360 days. This commenter, a U.S. operator, requests this extension in order to ensure that the new information provided in the AD can be inserted in its fleet's required manuals during a normal revision cycle. This would avoid the costs and time associated with having to issue a temporary partial revision and/or supplement.

The FAA does not concur. In developing an appropriate compliance time for this action, the FAA considered not only the degree of urgency associated with addressing the subject unsafe condition, but the practical aspect of incorporating and implementing the required maintenance program change within a reasonable

period of time for the majority of affected operators. Additionally, the FAA has issued numerous other AD's, applicable to transport category airplanes, with requirements and compliance times similar to this one [for example, reference AD 94–09–03, amendment 39–8891 (59 FR 18713, April 20, 1994), pertaining to British Aerospace Model BAe 146 series airplanes; AD 94–11–07, amendment 39–8923 (59 FR 28475, June 2, 1994), pertaining to British Aerospace Model BAC 1–11 series airplanes; and AD 94–26–05, amendment 39–9101, (60 FR 3, January 3, 1995), pertaining to Airbus Model A300, A310, and A320 series airplanes]. The 180-day compliance time specified in each of the previously issued AD's apparently has posed no problem in implementation for operators that are subject to those AD's. The FAA considers that the brake wear limits should be followed as soon as this information can reasonably be incorporated into an affected operator's maintenance program. Since the issuance of temporary manual revisions is a common practice among operators, the FAA cannot find that the incorporation of information required by this AD within the 180-day time period would be an undue burden on any operator.

Request To Clarify Service Information

This same commenter requests clarification as to the appropriate manual that should be used to determine the limits for refurbished brakes. The commenter points out an apparent discrepancy in the proposed AD between Note 5 in proposed paragraph (a)(l) and Table 4: Both reference the Aircraft Braking Systems (ABS) Component Maintenance Manual with Illustrated Parts List, but one specifies the document number as ''AP–652,'' while the other specifies ''AP–625.''

The FAA notes this typographical error. The correct document number is AP–652, which was shown correctly in Note 5 of the proposal. The FAA has revised Table 4 of the final rule to indicate this correct document number.

Conclusion

After careful review of the available data, including the comments noted above, the FAA has determined that air safety and the public interest require the adoption of the rule with the changes previously described. The FAA has determined that these changes will neither increase the economic burden on any operator nor increase the scope of the AD.

Cost Impact

There are approximately 124 Model F28 Mark 0100 and 0070 series airplanes of U.S. registry and 5 U.S. operators that will be affected by this AD.

The actions that are currently required by AD 94–06–06 take approximately 20 work hours per operator to accomplish, at an average labor rate of $60 per work hour. Based on these figures, the cost impact on U.S. operators of the actions currently required is estimated to be $6,000, or $1,200 per operator.

The new actions that are required by this AD action will take approximately 20 work hours per operator to accomplish, at an average labor rate of $60 per work hour. Based on these figures, the cost impact on U.S. operators of the new requirements of this AD is estimated to be $6,000, or $1,200 per operator.

The cost impact figures discussed above are based on assumptions that no operator has yet accomplished any of the requirements of this AD action, and that no operator would accomplish those actions in the future if this AD were not adopted.

Regulatory Impact

The regulations adopted herein will not have substantial direct effects on the States, on the relationship between the national government and the States, or on the distribution of power and responsibilities among the various levels of government. Therefore, in accordance with Executive Order 12612, it is determined that this final rule does not have sufficient federalism implications to warrant the preparation of a Federalism Assessment.

For the reasons discussed above, I certify that this action (1) is not a ''significant regulatory action'' under Executive Order 12866; (2) is not a ''significant rule'' under DOT Regulatory Policies and Procedures (44 FR 11034, February 26, 1979); and (3) will not have a significant economic impact, positive or negative, on a substantial number of small entities under the criteria of the Regulatory Flexibility Act. A final evaluation has been prepared for this action and it is contained in the Rules Docket. A copy of it may be obtained from the Rules Docket at the location provided under the caption **ADDRESSES.**

List of Subjects in 14 CFR Part 39

Air transportation, Aircraft, Aviation safety, Safety.

Adoption of the Amendment

Accordingly, pursuant to the authority delegated to me by the Administrator, the Federal Aviation Administration amends part 39 of the Federal Aviation Regulations (14 CFR part 39) as follows:

PART 39—AIRWORTHINESS DIRECTIVES

1. The authority citation for part 39 continues to read as follows:

Authority: 49 U.S.C. 106(g), 40113, 44701.

§ 39.13 [Amended]

2. Section 39.13 is amended by removing amendment 39–8854 (59 FR 11713, March 14, 1994), and by adding a new airworthiness directive (AD), amendment 39–9682, to read as follows:

96–13–13 Fokker: Amendment 39–9682. Docket 95–NM–224–AD. Supersedes AD 94–06–06, Amendment 39–8854.

Applicability: Model F28 Mark 0100 and F28 Mark 0070 series airplanes, equipped with Aircraft Braking Systems Corp. brakes having part number (P/N) 5008132–2, –3, –4, –5, –6, –7, –8, or 5011809; certificated in any category.

Note 1: This AD applies to each airplane identified in the preceding applicability provision, regardless of whether it has been otherwise modified, altered, or repaired in the area subject to the requirements of this AD. For airplanes that have been modified, altered, or repaired so that the performance of the requirements of this AD is affected, the owner/operator must request approval for an alternative method of compliance in accordance with paragraph (c) of this AD. The request should include an assessment of the effect of the modification, alteration, or repair on the unsafe condition addressed by this AD; and, if the unsafe condition has not been eliminated, the request should include specific proposed actions to address it.

Compliance: Required as indicated, unless accomplished previously.

To prevent loss of brake effectiveness during a high energy rejected take off (RTO), accomplish the following:

Note 2: An alternate wear measurement (AWM) is a measurement of the brake stack that determines stack wear. This measurement is used for any brake assembly without a wear indicator pin, or any brake assembly having a damaged wear indicator pin. The brake wear can be determined by measuring the distance from the back of the pressure plate subassembly to the inboard face of the brake housing at the wear indicator location.

(a) For Model F28 Mark 0100 series airplanes: Within 180 days after April 13, 1994 (the effective date of AD 94–06–06, amendment 39–8854), accomplish the requirements of paragraphs (a)(1) and (a)(2) of this AD:

(1) Incorporate the maximum brake wear limits specified in the following tables into the FAA-approved maintenance inspection

program and comply with these measurements thereafter.

TABLE 1.—BRAKE MANUFACTURER: AIRCRAFT BRAKING SYSTEMS CORPORATION (ABS)

Brake P/N	Maximum settings—non refurbished brakes	
	Maximum wear pin measurement (inch/mm)	Alternate wear measurement (inch/mm)
5008132–2	1.85″ (47 mm)	4.00″ (101.6 mm)
5008132–3	1.85″ (47 mm)	4.00″ (101.6 mm)
5008132–4	2.10″ (53.3 mm)	4.25″ (107.9 mm)
5008132–5	2.10″ (53.3 mm)	4.25″ (107.9 mm)
5008132–6	2.10″ (53.3 mm)	4.25″ (107.9 mm)
5008132–7	2.10″ (53.3 mm)	4.25″ (107.9 mm)

Note 3: Measuring instructions for non refurbished brakes can be found in the ABS Component Maintenance Manual with Illustrated Parts List AP–652 (Fokker Manual No. 32–43–77) or in ABS Service Bulletin Fo100–32–35. ABS Service Bulletin Fo100–32–35 does not contain measurement information relative to brake P/N's 5008132–2 and –3.

TABLE 2

Brake P/N	Maximum settings—refurbished brakes	
	Maximum wearpin measurement (inch/mm)	Alternate wear measurement (inch/mm)
5008132–2	1.85″ (47 mm)	4.00″ (101.6 mm)
5008132–3	1.85″ (47 mm)	4.00″ (101.6 mm)
5008132–4	2.20″ (55.9 mm)	4.35″ (110.5 mm)
5008132–5	2.20″ (55.9 mm)	4.35″ (110.5 mm)
5008132–6	2.20″ (55.9 mm)	4.35″ (110.5 mm)
5008132–7	2.20″ (55.9 mm)	4.35″ (110.5 mm)

Note 4: Refurbished brakes will have ''R11–3'' etched on the brake housing adjacent to the shuttle valve.

Note 5: Measuring instructions for refurbished brakes can be found in the ABS Component Maintenance Manual with Illustrated Parts List AP–652 (Fokker Manual No. 32–43–77) or in ABS Service Bulletin Fo100–32–38.

(2) For brakes on which a heat stack kit having an ''R'' after the part number (i.e., 5010322–2R; also called ''short stacks'') have been installed: Operators must use the maximum wear pin length which is based on the measured wear of the thinnest disk in the stack and is specified on the Airworthiness Tag that accompanies each heat stack kit (i.e., for airplanes equipped with brakes having short stacks installed, do not use either the standard maximum wear pin measurements or the alternate brake wear measurements specified in either Table 1 or Table 2 of this AD to determine brake wear.)

(b) Within 180 days after the effective date of this AD, incorporate the maximum brake wear pin limits specified in paragraphs (b)(1) and (b)(2) of this AD, as applicable, into the FAA-approved maintenance program and comply with these measurements thereafter. If any brake has measured wear beyond the maximum wear limits specified in those paragraphs, prior to further flight, replace it with a brake that is within the wear limits specified in the applicable paragraph.

(1) For Model F28 Mark 0100 and 0070 series airplanes:

TABLE 3

Brake unit part No.	Maximum settings—non-refurbished brakes (original equipment manufacturer)		
	Maximum wear pin measurement	Alternate brake wear measurement	Measure in accordance with aircraft braking systems (ABS) component maintenance manual with illustrated parts list (CMM w/IPL) number
5008132–2	1.85″ (47 mm)	4.00″ (101.6 mm)	CMM w/IPL AP–652 (32–43–77)
5008132–3	1.85″ (47 mm)	4.00″ (101.6 mm)	CMM w/IPL AP–652 (32–43–77)
5008132–4	2.10″ (53.3 mm)	4.25″ (107.9 mm)	CMM w/IPL AP–652 (32–43–77)
5008132–5	2.10″ (53.3 mm)	4.25″ (107.9 mm)	CMM w/IPL AP–652 (32–43–77)
5008132–6	2.10″ (53.3 mm)	4.25″ (107.9 mm)	CMM w/IPL AP–652 (32–43–77)
5008132–7	2.10″ (53.3 mm)	4.25″ (107.9 mm)	CMM w/IPL AP–652 (32–43–77)
5008132–8	2.20″ (55.9 mm)	4.35″ (110.5 mm)	CMM w/IPL AP–652 (32–43–77)

TABLE 4

Brake unit part number	Maximum settings—refurbished brakes (R11–3 on brake housing)		
	Maximum wear pin measurement	Alternate brake wear measurement	Measure in accordance with aircraft braking systems (ABS) component maintenance manual with illustrated parts list (CMM w/IPL) number
5008132–2	1.85″ (47 mm)	4.00″ (101.6 mm)	CMM w/IPL AP–652(32–43–77)
5008132–3	1.85″ (47 mm)	4.00″ (101.6 mm)	CMM w/IPL AP–652 (32–43–77)
5008132–4	2.20″ (55.9 mm)	4.35″ (110.5 mm)	CMM w/IPL AP–652 (32–43–77)
5008132–5	2.20″ (55.9 mm)	4.35″ (110.5 mm)	CMM w/IPL AP–652 (32–43–77)
5008132–6	2.20″ (55.9 mm)	4.35″ (110.5 mm)	CMM w/IPL AP–652 (32–43–77)
5008132–7	2.20″ (55.9 mm)	4.35″ (110.5 mm)	CMM w/IPL AP–652 (32–43–77)
5008132–8	2.20″ (55.9 mm)	4.35″ (110.5 mm)	CMM w/IPL AP–652 (32–43–77)

(2) For Model F28 Mark 0100 and 0070 series airplanes equipped a brake unit having P/N 5011809, A5011809, or B5011809: The maximum wear pin measurement is 2.50″ (63.5 mm), with an alternate brake wear measurement of 4.35″ (110.5 mm). The measurement shall be done in accordance with Aircraft Braking Systems (ABS) Component Maintenance Manual (CMM) with Illustrated Parts List (IPL) AP–747 (32–43–65).

(c) An alternative method of compliance or adjustment of the compliance time that provides an acceptable level of safety may be used if approved by the Manager, Standardization Branch, ANM–113, FAA, Transport Airplane Directorate. Operators shall submit their requests through an appropriate FAA Principal Maintenance Inspector, who may add comments and then send it to the Manager, Standardization Branch, ANM–113.

Note 6: Information concerning the existence of approved alternative methods of compliance with this AD, if any, may be obtained from the Standardization Branch, ANM–113.

(d) Special flight permits may be issued in accordance with sections 21.197 and 21.199 of the Federal Aviation Regulations (14 CFR 21.197 and 21.199) to operate the airplane to a location where the requirements of this AD can be accomplished.

(e) This amendment becomes effective on August 1, 1996.

Issued in Renton, Washington, on June 19, 1996.

Darrell M. Pederson,

Acting Manager, Transport Airplane Directorate, Aircraft Certification Service.

[FR Doc. 96–16242 Filed 6–26–96; 8:45 am]

BILLING CODE 4910–13–U

FEDERAL TRADE COMMISSION

16 CFR Part 409

Trade Regulation Rule Concerning the Incandescent Lamp (Light Bulb) Industry

AGENCY: Federal Trade Commission.

ACTION: Repeal of rule.

SUMMARY: The Federal Trade Commission (''Commission'' or ''FTC'') announces the repeal of the Trade Regulation Rule Concerning the Incandescent Lamp (Light Bulb) Industry (''Light Bulb Rule'' or ''Rule''). The Commission has reviewed the rulemaking record and determined that, because of more comprehensive lamp labeling rules that the Commission promulgated in 1994 under the Energy Policy and Conservation Act, as amended by the Energy Policy Act of 1992, and current industry light bulb marking practices, the Light Bulb Rule is no longer necessary or in the public interest. This notice contains a Statement of Basis and Purpose for repealing the Light Bulb Rule.

EFFECTIVE DATE: June 27, 1996.

FOR FURTHER INFORMATION CONTACT: Kent C. Howerton, Attorney, Federal Trade Commission, Bureau of Consumer Protection, Division of Enforcement, Room S–4302, 601 Pennsylvania Avenue, NW, Washington, DC 20580, telephone (202) 326–3013.

SUPPLEMENTARY INFORMATION:

Statement of Basis and Purpose

I. Background

The Commission undertook this rulemaking proceeding as part of the Commission's ongoing program of evaluating rules and guides to determine their effectiveness, impact, cost, and need. This proceeding also responds to President Clinton's National Regulatory Reinvention Initiative, which, among other things, urges agencies to eliminate obsolete or unnecessary regulations.

A. Light Bulb Rule

The Commission promulgated the Light Bulb Rule on July 23, 1970, following a public rulemaking proceeding.[1] The Light Bulb Rule became effective on January 25, 1971. It applies only to non-reflector general service incandescent electric lamps (commonly referred to as ''light bulbs'').[2]

In summary, the Light Bulb Rule declares it is an unfair method of competition and an unfair and deceptive act or practice, in connection with the sale of general service incandescent light bulbs, to:

(1) fail to disclose clearly and conspicuously on the containers of such light bulbs (or, if there are no containers, on the bulbs themselves) their average initial wattage, average initial lumens, and average laboratory life, 16 CFR 409.1(a)–(b) (1996);

(2) fail to disclose clearly and conspicuously on the bulbs themselves their average initial wattage and design voltage, *Id.* at 409.1(b) (1996);[3]

(3) represent or imply that savings in light bulb cost or the cost of light output will result from the use of a particular light bulb product because of the bulb's life or light output unless, in computing such savings, the following factors are taken into account and disclosed clearly and conspicuously for the light bulb being sold and the bulb with

[1] Final Rule and Statement of Basis and Purpose (''Light Bulb Rule SBP''), 35 FR 11784 (1970).

[2] The Light Bulb Rule defines ''general service incandescent lamps'' as all medium screw base incandescent electric lamps, 15-watt through 150-watt, 115-volt through 130-volt. The term includes lamps in the customary ''A'' type and other bulb shapes included in Interim Federal Specification W–L–00101G, and lamps that are produced in generally comparable bulb shapes for sale in competition with other general service incandescent lamps. The rule specifically excludes lamps designed and promoted primarily for decorative applications, appliances, traffic signals, showcases, projectors, airport equipment, trains, and lamps such as color, flood, reflector, rough service, and vibration service. 16 CFR 409.1 note 3 (1996). The lamp products covered by the Light Bulb Rule commonly are referred to as ''light bulbs.'' The term ''lamp products,'' on the other hand, refers more broadly to lighting products in general. In this notice, the term ''light bulb'' refers only to those lamp products covered by the Light Bulb Rule.

[3] In the Light Bulb Rule SBP, the Commission explained that industry stressed the need to maintain a prominent wattage disclosure on incandescent light bulbs because the use of excess wattage in fixtures is unsafe and because consumers were accustomed to buying on the basis of wattage. 35 FR at 11786.

which the comparison is being made: light bulb cost, electrical power cost, labor cost for bulb replacement (if any), actual light output in average initial lumens, and average laboratory life in hours, *Id.* at 409.1(c) (1996); and

(4) represent or imply that a light bulb will give more light, maintain brightness longer, or furnish longer life without clearly and conspicuously disclosing, for both the light bulb being sold and the light bulb with which the comparison is being made: the average initial light output in lumens, the average initial wattage, the laboratory life in hours, and, if there is a claim that the light bulb maintains brightness longer, the light output in lumens at 70% of the bulbs' rated lives (''maintained average lumens''), *Id.* at 409.1(d) (1996).

Four notes at the end of the rule define terms used in the rule or require certain procedures or tests to be used in making disclosures required by the rule.

B. Appliance Labeling Rule

In 1994, pursuant to a directive of the Energy Policy Act of 1992 (''EPA 92''),[4] the Commission amended its Rule Concerning Disclosures Regarding Energy Consumption and Water Use of Certain Home Appliances and Other Products Required Under the Energy Policy and Conservation Act (''Appliance Labeling Rule''), 16 CFR 305 (1996), to specify new labeling requirements for lamp products.[5] EPA 92 directed the Commission to prescribe rules requiring that certain types of lamp products be labeled with ''such information as the Commission deems necessary to enable consumers to select the most energy efficient lamps which meet their requirements.'' 42 U.S.C. 6294(a)(2)(C)(i).

In addition to incandescent light bulbs, the Appliance Labeling Rule applies to incandescent reflector lamps, 16 CFR 305.03(m) (1996), medium screw base compact fluorescent lamps, *Id.* at 305.03(l) (1996), and general service fluorescent lamps, *Id.* at 305.03(k) (1996). Although there are no direct conflicts between the Light Bulb Rule and the Appliance Labeling Rule, there are overlapping requirements for the light bulbs that are covered by both rules. The discussion in this notice summarizes only the requirements of the two rules that apply to these light bulbs.

Like the Light Bulb Rule, the Appliance Labeling Rule requires disclosures on package labels of light output, wattage, and life ratings. 16 CFR 305.11(e)(1)(i)–(ii) (1996). As required by EPCA, 42 U.S.C. 6294(a)(2)(C)(i), the Appliance Labeling Rule requires that these disclosures be based on performance at 120 volts input, regardless of the rated lamp voltage (design voltage). 16 CFR 305.11(e)(1)(iii) (1996). The Appliance Labeling Rule, however, allows manufacturers the option of adding disclosures on lamp packages based on the lamp's performance at a different design voltage of 125 volts or 130 volts, if the applicable voltage (*i.e.*, 120, 125, or 130) is disclosed on the label along with each disclosure of light output, wattage, and life. Manufacturers may choose to place the performance information at a design voltage of 125 volts or 130 volts on the primary display panel of the package and place the performance information at 120 volts elsewhere on the package. If they do so, they must add a specific disclosure on the primary display panel that describes the effect on performance of the difference in voltage and where on the package the performance information at 120 volts may be found.[6]

The Appliance Labeling Rule requires that these disclosures appear together in a specified order and be worded in a certain way (*i.e.*, as ''Light Output: XX Lumens; Energy Used: XX Watts; Life: XX Hours'') on the label's principal display panel. 16 CFR 305.11(e)(1)(ii) (1996). The Light Bulb Rule, on the other hand, does not specify any order or wording for its required disclosures. It simply specifies that the three ratings be disclosed in terms of lumens, watts, and hours, and appear together on at least two panels of the label, and on any other panel on which a lumen, wattage, or hours of life claim is made. 16 CFR 409.1(a), 409.1 note 4 (1996).

The Appliance Labeling Rule requires that the disclosures of light output, energy used, and life appear with equal clarity and conspicuousness. 16 CFR 305.11(e)(ii) (1996). It does not specify any particular type style or type size, but it requires that certain disclosures be made in the same size print, and that other disclosures be approximately 50% as large. The Light Bulb Rule specifies that both the lumens and hours rating disclosures be in a medium-face or bold-face type that is at least two-fifths the height of the wattage rating figure on the same panel or three-sixteenths of an inch in height, whichever is larger. 16 CFR 409.1 note 4 (1996). The Light Bulb Rule also includes similar type size and style requirements for the disclosures for multiple filament (three-way) light bulbs. *Id.*

The Appliance Labeling Rule specifies two additional disclosures that are not required by the Light Bulb Rule. First, the following advisory statement must appear on the principal display panel of the package label: ''To save energy costs, find the bulbs with the light output you need, then choose the one with the lowest watts.''[7] 16 CFR 305.11(e)(1)(vi) (1996). Second, all cartons of covered lamps that are shipped within or imported into the United States must be marked with the following statement: ''These lamps comply with Federal energy efficiency labeling requirements.'' *Id.* at 305.11(e)(4) (1996).

The Light Bulb Rule requires that the disclosures of light output, wattage, and life be determined in accordance with a specific Federal purchase specification and be based upon generally accepted and approved test methods and specifications, at the lamp product's design voltage.[8] The Appliance Labeling Rule requires that disclosures of design voltage, wattage, light output or life be based upon a reasonable basis consisting of competent and reliable scientific tests that substantiate the disclosures. Under the Appliance

[4] Pub. L. No. 102–486, 106 Stat. 2776, 2817–2832 (Oct. 24, 1992) (codified in 42 U.S.C. 6201, 6291–6309). EPA 92 amended in several respects the Energy Policy and Conservation Act of 1975 (''EPCA''), which requires the Commission to prescribe labeling rules for certain major household appliances and other products.

[5] Final Rule and Statement of Basis and Purpose (''Appliance Labeling Rule/Lamps SBP''), 59 FR 25176 (May 13, 1994). The lamp labeling requirements of the Appliance Labeling Rule became effective on May 15, 1995. In response to a petition from the Lamp Section of the National Electrical Manufacturers Association (''NEMA''), and because of apparent uncertainties among incandescent lamp manufacturers regarding their compliance responsibilities under the combined requirements of the Appliance Labeling Rule and the Light Bulb Rule, the Commission determined that it would not take law enforcement actions until December 1, 1995, against manufacturers of incandescent lamp products not in compliance with the Appliance Labeling Rule. 60 FR 15198 (March 22, 1995).

[6] *Id.* The specific disclosure is: ''This product is designed for [125/130] volts. When used on the normal line voltage of 120 volts, the light output and energy efficiency are noticeably reduced. See [side/back] panel for 120 volt ratings.''

[7] Manufacturers of incandescent reflector lamps may use the following alternative advisory disclosure: ''To save energy costs, find the bulbs with the beam spread and light output you need, then choose the one with the lowest watts.''

[8] 16 CFR 409.1 note 1 (1996). The Light Bulb Rule states that, for light bulbs covered by that rule, the ''average initial wattage, average initial lumen, and average laboratory life disclosures required by this section shall be in accordance with the requirements of interim Federal Specification, Lamp, Incandescent (Electric, Large, Tungsten-Filament) W–L–00101 G and shall be based upon generally accepted and approved test methods and procedures.'' In 1977, that specification ceased being interim and is now known as Federal Specification, Lamp, Incandescent (Electric, Large, Tungsten-Filament) W–L–101H/GEN. This specification refers to pertinent American National Standards Institute (''ANSI'') test protocols, which are consistent with the Illuminating Engineering Society of North America (''IES'') protocols that are cited in the Appliance Labeling Rule, 16 CFR 305.5(b) (1996), as an acceptable reasonable basis for determining the light output and life of incandescent light bulbs. 59 FR at 25200 n.251.

Labeling Rule, for light output and life ratings the Commission will accept, but does not require, tests conducted according to specific test protocols issued by IES,[9] or testing in accordance with final test procedures issued by the U.S. Department of Energy.[10]

Both the Light Bulb Rule and the Appliance Labeling Rule contain provisions concerning certain affirmative claims about lamp products. The Appliance Labeling Rule requires that any label, printed material prepared for display or distribution at the point of sale, or catalog from which a covered lamp product may be ordered that contains an operating cost claim clearly and conspicuously disclose, in close proximity to the claim, the assumptions upon which the claim is based, including, *e.g.*, purchase price, unit cost of electricity, hours of use, patterns of use. 16 CFR 305.11(e)(3), 305.13(a)(3), 305.14(c)(2) (1996). These Appliance Labeling Rule disclosure requirements do not apply to such claims made in other promotional materials, such as advertisements.

The Light Bulb Rule covers claims that savings in either light bulb cost or cost of light will result from the use of a particular light bulb because of the bulb's life or light output. It also covers comparative brightness, light bulb life, and light output claims. The Light Bulb Rule specifies factors (*e.g.*, labor costs for replacement, light output, life) that, depending on the particular claim being made, must be taken into consideration and clearly and conspicuously disclosed, for both the light bulb being offered for sale and the bulb(s) with which the comparison is being made. 16 CFR 409.1(c) (1996). The Light Bulb Rule's requirements apply to such claims in all types of advertising, as well as on labels, point-of-sale printed materials, and catalogs. The Appliance Labeling Rule does not include disclosure requirements concerning these comparative claims.

The Light Bulb Rule requires that light bulbs themselves be marked clearly and conspicuously with wattage and design voltage. 16 CFR 409.1(b) (1996). The Appliance Labeling Rule does not require that lamp products be marked with such information.

II. Proceeding To Consider Repeal of Light Bulb Rule

When the Commission issued the lamp labeling amendments to the Appliance Labeling Rule, it announced that, although there were no conflicts between the two rules, it would decide following that amendment proceeding what further action, if any, it should take concerning the Light Bulb Rule. 59 FR at 25177.

A. Advance Notice of Proposed Rulemaking

Accordingly, on April 6, 1995, the Commission published a notice (''Advance Notice of Proposed Rulemaking'' or ''ANPR'')[11] requesting comments concerning the current need for the Light Bulb Rule as part of the Commission's regulatory review program for all of its rules and guides, and in light of the new lamp labeling rules under the Appliance Labeling Rule.[12] The ANPR solicited comments about the benefits and burdens of the Light Bulb Rule to consumers and industry, and whether a need still exists for the Light Bulb Rule.

The Commission received nine comments in response to the ANPR.[13] Four comments were submitted by individual consumers, one by an organization that purchases and uses light bulbs (''organization/user comment''), three by lamp product manufacturers, and one by a trade association that represents lamp product manufacturers.[14]

The four individual consumer comments state that the Light Bulb Rule is still needed because the disclosures required by the rule help consumers make informed purchasing decisions.[15] They want labels to continue to disclose light output, wattage, and life information. These comments do not address whether the overlapping requirements of the Appliance Labeling Rule will ensure that labels provide consumers with this information. The organization/user comment also opposes the elimination of the Light Bulb Rule. It contends consumers would lose valuable consumer protections that are only contained in the Light Bulb Rule.[16]

Hytron, a manufacturer of extended-service, long-life incandescent lamp products, including incandescent reflector lamps and traffic signal lamps, supports keeping the Light Bulb Rule, and, instead, eliminating the lamp labeling requirements of the Appliance Labeling Rule.[17] It appears that Hytron primarily objects to the Appliance Labeling Rule because it requires labeling disclosures of incandescent lamps at 120 volts regardless of the lamp's design voltage, and because it requires the labeling of incandescent reflector lamps.[18]

The comments from two manufacturers (Philips and GE) and the trade association (NEMA) state that the Light Bulb Rule's disclosure requirements of light output, wattage, and life for general service incandescent light bulbs are unnecessary because of the uniform disclosure requirements for various types of competing lamp products in the Appliance Labeling Rule.[19] They recommend that the

[9] 16 CFR 305.5(b) (1996). *See also, supra* note 8.

[10] 59 FR at 25200.

[11] Under section 18(b)(2) of the Federal Trade Commission Act (''FTC Act''), 15 U.S.C. 57a(b)(2), the Commission must publish an ANPR prior to initiating a proceeding to promulgate, amend, or repeal a trade regulation rule. The Commission determined to treat the April 6, 1995, request for comments as an ANPR because it contained all the elements that section 18(b)(2) requires in an ANPR. To comply with section 18, the Commission submitted the notice to the Chairman of the Committee on Commerce, Science, and Transportation, United States Senate and the Chairman of the Subcommittee on Commerce, Trade and Hazardous Materials, United States House of Representatives.

[12] 60 FR 17491. *See supra* note 11. The comment period for this notice was scheduled to end on June 6, 1995, but was extended until August 7, 1995, at the request of industry members.

[13] Anderson, #B17240700001; Raeth, #B17240700002; Bowe, #B17240700003; McGarry, #B17240700004; Hytron Electric Products, a division of Trojan Inc. (''Hytron''), #B17240700005; Delta Phi Epsilon, Washington, DC, #B17240700006 (''DPE''); Philips Lighting, Philips Elmet, a division of North American Philips Corp. (''Philips''), #B17240700007; GE Lighting, General Electric Co. (''GE''), #B17240700008; and Lamp Section, NEMA, #B17240700009. The ANPR is filed as document number B172407. The comments submitted in response to the ANPR are filed as documents #B17240700001, #B17240700002, etc.

[14] The trade association, NEMA, is the largest U.S. trade association representing manufacturers of products used in the generation, transmission, distribution, control, and end-use of electricity. Member companies in the Lamp Section of NEMA produce more than 90% of general service incandescent and fluorescent lamp products sold in the United States. NEMA Lamp Section members include General Electric Lighting, Osram Sylvania, Inc., Philips Lighting Co., Supreme Corp., Venture Lighting Internat'l, Duro-Test Corp. and EYE Lighting International. NEMA, #B17240700009.

[15] Anderson, #B17240700001 (rule very valuable to him as a consumer; reads labels very closely, particularly as to lumens and voltage; label information can be a safety factor since many enclosed fixtures are rated for up to 60W but 75+W bulbs will fit the same sockets); Raeth, #B17240700002 (eliminating the rule would be a great disservice to the consumer, who would not know the value of what he or she was purchasing); Bowe, #B17240700003 (maintain rule requiring packages to show wattage, lumens, and bulb life; consumers have a right to know what they are buying); and McGarry, #B17240700004 (do not weaken the labeling requirements; uses information to make comparative decisions when purchasing).

[16] DPE, #B17240700006.

[17] Hytron, #B17240700005.

[18] The Commission does not have the authority to eliminate these requirements from the Appliance Labeling Rule. EPCA requires that labeling information for incandescent lamps under the Appliance Labeling Rule be based on operation at 120 volts. 42 U.S.C. 6294(a)(2)(C)(i). EPCA also defines the lamp products, including incandescent reflector lamps, that are to be covered by the lamp labeling rules under the Appliance Labeling Rule. 42 U.S.C. 6291(30), 6294(a)(2)(C)(i).

[19] Philips, #B17240700007; GE, #B17240700008; and NEMA, #B17240700009.

Commission repeal all or most of the Light Bulb Rule to avoid conflicts, multiple and overlapping requirements, and inconsistencies with the disclosure requirements of the Appliance Labeling Rule.

GE recommends that the Commission repeal the entire Light Bulb Rule.[20] It believes the Appliance Labeling Rule's requirements are better for today's modern products and consumers' information needs, and for advancing the energy efficiency goals of our modern day workplace. According to GE, retaining the Light Bulb Rule, in addition to the Appliance Labeling Rule, is inefficient and exposes manufacturers to a significant risk that they may fail to comply with both rules. Further, although the Light Bulb Rule requires that light bulbs be marked clearly and conspicuously with wattage and design voltage and the Appliance Labeling Rule does not, GE believes that such marking is a common industry practice that would not be affected by the rescission of the Light Bulb Rule. It states that this is a ''sound business practice that reduces liability and gives consumers important information.'' Accordingly, GE marks many products that are not covered by the Light Bulb Rule with wattage, and, as appropriate, with design voltage.

NEMA states that lamp product manufacturers should be subject to only one set of lamp labeling and disclosure regulations, which would ensure uniform disclosures of lamp product performance information to consumers. NEMA believes that the Appliance Labeling Rule represents the more comprehensive and modern approach to lamp labeling and that the disclosures required under the Appliance Labeling Rule fully and fairly inform consumers about lamp product performance.[21] It believes that the objectives of the Light Bulb Rule are fully served by the disclosures required by the Appliance Labeling Rule. For these reasons, NEMA recommends that the Commission repeal the Light Bulb Rule and retain the Appliance Labeling Rule as the sole federal labeling and disclosure requirements for lamp products.

NEMA also believes that repealing the Light Bulb Rule would not induce manufacturers to abandon their practice of inscribing wattage and design voltage on incandescent lamps and wattage on fluorescent lamps. NEMA states that manufacturers routinely mark their general service incandescent and fluorescent lamps, even those for which such marking is not required under federal labeling rules. Further, NEMA states that an international safety standard issued by the International Electrotechnical Commission (''IEC'') (IEC 432–1, 1993) requires marking of wattage and voltage on general service incandescent lamps. NEMA, therefore, believes that manufacturers generally would continue the marking practices required by the Light Bulb Rule, even if the Commission repealed the rule.

Philips strongly supports NEMA's position. Philips, however, also states that the best alternative would be for the Commission to repeal the Light Bulb Rule, and to modify the Appliance Labeling Rule to include some of the disclosure requirements of Section 409.1(c) (which requires disclosures in connection with product comparison claims about lamp cost or cost of light), and Section 409.1(d) (which requires disclosures in connection with claims that a light bulb will give more light, maintain brightness longer or furnish longer life) of the Light Bulb Rule.[22] Philips believes that adding these disclosure requirements would strengthen the Appliance Labeling Rule.

B. Notice of Proposed Rulemaking

The Commission compared the requirements of the Light Bulb Rule and the Appliance Labeling Rule, analyzed the bases for both rules explained in the Light Bulb Rule SBP and the Appliance Labeling Rule/Lamps SBP, and reviewed the comments filed in response to the Light Bulb Rule ANPR. Based on that comparison and review, the Commission solicited comments in a Notice of Proposed Rulemaking (''NPR'') that proposed repealing the Light Bulb Rule.[23] In the NPR, the Commission explained that the requirements of the two rules fall into three categories: (1) basic disclosures of performance information (*e.g.*, light output, watts, and life); (2) substantiation testing for these disclosures; and (3) additional disclosures that must be made in conjunction with certain performance claims. The Commission also summarized the comments submitted in response to the ANPR and explained why the Commission believed there may not be a continuing need for the Light Bulb Rule's requirements.

The Commission received five comments in response to the NPR (two from manufacturers, two from distributors, and an additional comment from NEMA).[24] Four comments support repealing the Light Bulb Rule.[25] One comment recommends that the Commission repeal the lamp labeling rules under the Appliance Labeling Rule.[26]

Supreme states that the new lamp labeling rules under the Appliance Labeling Rule will provide users with the information they need to understand what type of light bulb is in the package they are purchasing. Supreme also states that its distributors are confused by the amount of information on packages due to the requirements of both rules and that it continuously must seek expensive legal advice about how to prepare artwork and design to comply with both rules.[27] Stone and Marvel request that the Commission repeal the Light Bulb Rule because the overlapping requirements create confusion and duplication.[28]

NEMA states it supports repeal of the Light Bulb Rule and believes that consumers' need for information is fully served by the disclosure and substantiation requirements of the Appliance Labeling Rule.[29] NEMA also addresses several specific issues the Commission raised in the NPR. First, NEMA believes that because of the importance of safety information to consumers (and to minimize their product liability) manufacturers will continue marking wattage and design voltage on lamps notwithstanding the repeal of the Light Bulb Rule. Second, NEMA believes that the Light Bulb Rule's required disclosures relating to a lamp's brightness are unnecessary because the Appliance Labeling Rule's standardized, side-by-side disclosures of light output and life nullify any attempts to mislead consumers about a

[20] GE, #B17240700008.

[21] NEMA, #B17240700009.

[22] Philips, #B17240700007.

[23] 61 FR 4382 (Feb. 6, 1996). The NPR is filed as document number B193867. The comments submitted in response to the NPR are filed as documents #B19386700001, #B19386700002, etc. The comment period closed on March 7, 1996.

[24] In the NPR, the Commission indicated it would hold a hearing to allow for the presentation of testimony on the issues, if there was interest in a hearing. NEMA and GE requested an opportunity to testify, but only if the Commission scheduled a hearing because other parties requested one. NEMA, #B19386700004; GE, #B191281, letters of March 7 and 14, 1996. Following the end of the comment period, both NEMA and GE informed the Commission's staff that they did not wish to testify because no additional parties requested that the Commission conduct a hearing.

[25] Supreme, #B19386700001; Robert M. Stone, Regosin, Edwards, Stone & Feder (''Stone''), #B19386700002; Marvel Lighting Corp. (''Marvel''), #B19386700003; NEMA, #B19386700004.

[26] Sigmatron Biological Systems (''Sigmatron''), #B19386700005. Because EPCA required the Commission to promulgate the lamp labeling rules it adopted in the Appliance Labeling Rule, the Commission does not have the authority to repeal those requirements in favor of retaining the Light Bulb Rule. *See also, supra* note 18.

[27] Supreme, #B19386700001.

[28] Stone, #B19386700002; Marvel, #B19386700003.

[29] NEMA, #B19386700004.

product's maintaining brightness better than competing products. Third, NEMA believes that the Appliance Labeling Rule's standardized labeling disclosure requirements, along with its requirement that packaging representations about the cost of operating a lamp be based on assumptions that are clearly and conspicuously disclosed, provide adequate information for consumers to evaluate comparative performance claims.[30] NEMA also states that repealing the Light Bulb Rule, and relying exclusively on the Appliance Labeling Rule, will eliminate overlaps and inconsistencies, confer benefits on consumers through standardized package disclosures, and result in significant cost savings for both manufacturers and consumers.

III. Basis for Repeal of the Light Bulb Rule

The Commission has compared the requirements of the Light Bulb Rule and the Appliance Labeling Rule and reviewed the comments filed in response to the Light Bulb Rule ANPR and NPR. For the reasons explained below, the Commission concludes that the Light Bulb Rule is no longer necessary or in the public interest.

First, the requirements in the Light Bulb Rule that the basic disclosures of light output, watts, and life be made on package labels are unnecessary because they are duplicated by the Appliance Labeling Rule. The Appliance Labeling Rule requires that this information also be disclosed in catalogs from which the products can be ordered. Further, it requires that these disclosures be made on labels and in catalogs for competing medium screw base compact fluorescent lamps and incandescent reflector lamps, as well as for light bulbs covered by the Light Bulb Rule. These disclosures, in conjunction with the required advisory statement about how consumers can select the most energy-efficient lamp that meets their needs, give consumers the information they need at the point of sale to select the appropriate lamp product.[31]

Second, the requirement in the Light Bulb Rule that manufacturers mark bulbs with wattage and voltage information is unnecessary. According to the comments, manufacturers currently mark various types of lamp products voluntarily with wattage and design voltage information so that consumers can use these lamp products safely. The Commission believes that the marketplace will provide incentives for manufacturers to continue marking this information on lamp products, even after the Commission has repealed the Light Bulb Rule.

Third, the Light Bulb Rule's substantiation requirements are unnecessary because these requirements are duplicated in the Appliance Labeling Rule. The requirement in the Appliance Labeling Rule that the basic disclosures be based on ''a reasonable basis consisting of competent and reliable scientific tests substantiating the representation'' is sufficient to ensure the accuracy and uniformity of the disclosures for competing lamp products. Further, based on the evidence in the rulemaking proceeding for the Appliance Labeling Rule, it appears that the test protocols required by the Light Bulb Rule are consistent with IES test protocols that the Appliance Labeling Rule recognizes as sufficient to satisfy its reasonable basis standard for the disclosures of light output and life.[32] However, the Appliance Labeling Rule provides manufacturers flexibility to use other scientific test protocols if they are competent and reliable.

Fourth, the Light Bulb Rule's disclosure requirements for comparison claims about savings in light bulb cost or cost of operation, or claims that a light bulb will give more light, maintain brightness longer, or furnish longer life are unnecessary. Through different disclosure requirements the Appliance Labeling Rule allows consumers to make informed, comparative decisions relating to costs. Specifically:

(1) The Appliance Labeling Rule requires disclosure of light output and life information in labels and catalogs. It requires that labels and catalogs for incandescent ''A'' type bulbs, as well as for competing medium screw base compact fluorescent lamps and incandescent reflector lamps, disclose light output, wattage, and life, along with an advisory statement about how the consumer can select the lamp product that will cost the least to operate for a specific light output. This information enables consumers to evaluate comparison light output and lifetime claims for competing products at the point of sale and to select the appropriate lamp that meets their needs.

(2) Under the Appliance Labeling Rule, claims about cost of operation of a covered lamp product in labels, point-of-sale printed materials, and catalogs must be accompanied by disclosures of the assumptions on which the claims are based (*e.g.*, purchase price, unit cost of electricity, hours of use, patterns of use). These disclosures, along with the advisory statement and the disclosures of light output, wattage, and life, for competing lamp products on product labels and in catalogs give consumers the information they need at the point of purchase to evaluate comparison claims about savings in cost of operation.

(3) Purchase price information is readily available to consumers at the point of sale (both in retail stores and in catalogs). Thus, consumers have information at the point of sale to evaluate comparison claims about lamp product purchase costs.

(4) Unit electrical cost information is readily available to consumers on their monthly electric utility bills or from their electrical utility companies. Consumers can use this information, along with the advisory statement and the disclosures of basic performance information on packages and catalogs, to evaluate any comparison operating cost claims.

Although the Appliance Labeling Rule does not contain disclosure requirements similar to the Light Bulb Rule covering comparative claims about brightness, length of life, or amount of light, the Commission concludes that the Appliance Labeling Rule's requirements provide consumers comparable information. The Appliance Labeling Rule's requirements that labels disclose light output, energy used, and life, and that labels, point-of-sale promotional materials, and catalogs that contain a claim regarding cost of operation clearly and conspicuously disclose the assumptions upon which the claim is based, provide consumers comparable information they need to evaluate such claims and make informed purchasing decisions. Further, the Commission can address any significant problems that might arise in the future concerning specific performance claims or a failure to disclose material purchase information not covered by the Appliance Labeling Rule on a case-by-case basis, administratively, under Section 5 of the FTC Act, 15 U.S.C. 45, or through Section 13(b) actions, 15 U.S.C. 53(b), filed in federal district court. Prosecuting serious misrepresentations

[30] Further, NEMA states that the Appliance Labeling Rule's labeling disclosures for competing lamp products make identification of a comparison lamp under the Light Bulb Rule superfluous, and make it unrealistic for a manufacturer or marketer to misrepresent or distort a lamp's comparative performance in advertising and other media, as well as on labels, point-of-sale promotional materials, and catalogs. *Id*.

[31] In addition, the Appliance Labeling Rule's format requirements for the disclosure of basic performance data on labels and in catalogs, 16 CFR 305.11(e)(1)(ii), 305.14(c)(1) (1996), obviate the need for the specific type size and placement requirements of the Light Bulb Rule for package labels, 16 CFR 409.1(a), 409.1 note 4 (1996).

[32] 59 FR 25200.

and the failure to disclose material information in district court allows the Commission to obtain injunctive relief as well as equitable remedies, such as redress or disgorgement.

IV. Regulatory Flexibility Act

The Regulatory Flexibility Act (''RFA''), 5 U.S.C. 601–11, requires an analysis of the anticipated impact of the repeal of the Light Bulb Rule on small businesses. The reasons for repeal of the rule have been explained in this notice. Repeal of the Light Bulb Rule would appear to have little or no effect on small businesses. Moreover, the Commission is not aware of any existing federal laws or regulations that would conflict with repeal of the Light Bulb Rule. Further, no comments suggested any adverse effect on small business from repeal. For these reasons, the Commission certifies, pursuant to Section 605 of the RFA, 5 U.S.C. 605, that this action will not have a significant economic impact on a substantial number of small entities.

V. Paperwork Reduction Act

The Light Bulb Rule imposes third-party disclosure requirements that constitute ''information collection requirements'' under the Paperwork Reduction Act, 44 U.S.C. 3501 *et seq.* Accordingly, repeal of the Light Bulb Rule will eliminate any burdens imposed by these disclosure requirements.

List of Subjects in 16 CFR Part 409

Advertising, Consumer protection, Energy conservation, Labeling, Lamp products, Trade practices.

PART 409—[REMOVED]

The Commission, under authority of Section 18 of the Federal Trade Commission Act, 15 U.S.C. 57a, amends chapter I of Title 16 of the Code of Federal Regulations by removing Part 409.

By direction of the Commission.

Donald S. Clark,

Secretary.

[FR Doc. 96–16301 Filed 6–26–96; 8:45 am]

BILLING CODE 6750–01–P

DEPARTMENT OF STATE

Bureau of Political-Military Affairs

22 CFR Part 126

[Public Notice 2386]

Amendment to the List of Proscribed Destinations

AGENCY: Department of State.

ACTION: Final rule.

SUMMARY: The Department of State is amending the International Traffic in Arms Regulations (ITAR) to reflect that it is the policy of the United States to deny licenses, other approvals, exports and imports of defense articles and defense services, destined for or originating in Afghanistan. This amendment formalizes a policy the U.S. has had in place since 1992 to deny import and export licenses for articles and services originating in or destined for Afghanistan due to the ongoing civil war in that country.

EFFECTIVE DATE: June 14, 1996.

FOR FURTHER INFORMATION CONTACT: Joseph L. Novak, Office of Arms Transfer and Export Control Policy, Bureau of Political-Military Affairs, Department of State (202–736–7996).

SUPPLEMENTARY INFORMATION: The Department of State is amending the ITAR to reflect that it is the policy of the United States, pursuant to § 126.1, to deny licenses, other approvals, exports and imports of defense articles and defense services, destined for or originating in Afghanistan. Requests for licenses or other approvals for Afghanistan involving items covered by the Munitions List (22 CFR part 121) will be reviewed with a presumption of disapproval.

This amendment to the ITAR involves a foreign affairs function of the United States and thus is excluded from the major rule procedure of Executive Order 12291 (46 FR 13193) and the procedures of 5 U.S.C. 553 and 554. This final rule does not contain a new or amended information requirement subject to the Paperwork Reduction Act (44 U.S.C. 3501 *et seq.*).

List of Subjects in 22 CFR Part 126

Arms and munitions, Exports.

Accordingly, under the authority of Section 38 of the Arms Export Control Act (22 U.S.C. 2778) and Executive Order 11958, as amended, 22 CFR subchapter M is amended as follows:

PART 126—[AMENDED]

1. The authority citation for part 126 continues to read as follows:

Authority: Secs. 2, 38, 40, 42, and 71, Arms Export Control Act, Pub. L. 90–629, 90 Stat. 744 (22 U.S.C. 2752, 2778, 2780, 2791, and 2797); E.O. 11958, 41 FR 4311; E.O. 11322, 32 FR 119; 22 U.S.C. 2658; 22 U.S.C. 287c; E.O. 12918, 59 FR 28206.

§ 126.1 [Amended]

2. Section 126.1 is amended by adding ''Afghanistan,'' immediately prior to ''Armenia'' in paragraph (a).

Dated: June 10, 1996.

Lynn E. Davis,

Under Secretary of State for Arms Control and International Security Affairs.

[FR Doc. 96–16360 Filed 6–26–96; 8:45 am]

BILLING CODE 4710–25–M

DEPARTMENT OF THE TREASURY

Internal Revenue Service

26 CFR Parts 1 and 602

[TD 8679]

RIN 1545–AU37

Regulations Under Section 382 of the Internal Revenue Code of 1986; Application of Section 382 in Short Taxable Years and With Respect to Controlled Groups

AGENCY: Internal Revenue Service (IRS), Treasury.

ACTION: Final and temporary regulations.

SUMMARY: This document contains final and temporary regulations relating to limitations on net operating loss carryforwards and certain built-in losses following an ownership change and comply with the statutory direction under section 382(m) of the Internal Revenue Code to prescribe regulations concerning short taxable years and controlled groups. This document also contains amendments relating to the end of separate tracking of the stock ownership of loss corporations that cease to exist following a merger or similar transaction. The text of these temporary regulations also serves as the text of the proposed regulations set forth in the notice of proposed rulemaking on this subject in the Proposed Rules section of this issue of the Federal Register.

DATES: These regulations are effective June 27, 1996.

For dates of application and special transition rules, see Effective Dates under **SUPPLEMENTARY INFORMATION.**

FOR FURTHER INFORMATION CONTACT: David B. Friedel at (202) 622–7550 (not a toll-free number).

SUPPLEMENTARY INFORMATION:

Paperwork Reduction Act

The collection of information contained in these temporary regulations has been reviewed and approved by the Office of Management and Budget in accordance with the Paperwork Reduction Act (44 U.S.C. 3507) under the control number 1545–1434. Section 1.382–8T(h) requires a response from certain corporations that are members of controlled groups. The IRS requires this information to assure compliance with section 382(m)(5) so that the value of a loss corporation that is a member of a controlled group is not taken into account more than once in computing a section 382 limitation. Responses to this collection of information are required to obtain a benefit (relating to the restoration of value for section 382 purposes).

An agency may not conduct or sponsor, and a person is not required to respond to, a collection of information unless the collection of information displays a valid control number.

For further information concerning this collection of information, and where to submit comments on the collection of information and the accuracy of the estimated burden, and suggestions for reducing this burden, please refer to the preamble to the cross-referencing notice of proposed rulemaking published in the Proposed Rules section of this issue of the Federal Register.

Books or records relating to a collection of information must be retained as long as their contents may become material in the administration of any Internal Revenue law. Generally, tax returns and tax return information are confidential, as required by 26 U.S.C. 6103.

Background and Explanation of Provisions

On February 4, 1991, the IRS and Treasury issued three notices of proposed rulemaking, CO–132–87 (56 FR 4194), CO–077–90 (56 FR 4183), and CO–078–90 (56 FR 4228), setting forth rules regarding the application of sections 382 and 383 by consolidated groups and by controlled groups, and the carryover and carryback of losses to consolidated and separate return years.

For reasons explained in the preamble to TD 8678 (published elsewhere in this issue of the Federal Register), the IRS and Treasury are issuing temporary amendments concerning the limitations on net operating loss carryforwards and certain built-in losses and credits following an ownership change of a consolidated group. The temporary regulations contained in this Treasury decision complement those other temporary regulations. They assure that the members of a controlled group cannot duplicate value in computing their respective section 382 limitations, a result not permitted to members of a group filing consolidated returns. See § 1.1502–93T.

These temporary regulations are substantially identical to the rules proposed on January 29, 1991. One provision (relating to the effects of successive ownership changes) was moved from the consolidated return regulations to the section 382 regulations to clarify that it is applicable to all corporations. These temporary amendments do not address the numerous comments on the proposed regulations. Many of these comments are still under consideration.

Effective Dates

The temporary amendments are generally effective as of January 1, 1997. The final rules relating to the value of stock added to § 1.382–2(a)(3)(i) and the temporary rules in § 1.382–2T(f)(1)(ii) (relating to the end of separate tracking of certain loss corporations) are generally effective as of January 29, 1991. The temporary rules in § 1.382–5T (relating generally to short taxable years and successive ownership changes) generally apply to loss corporations that have an ownership change to which section 382(a), as amended by the Tax Reform Act of 1986, applies.

Special Analysis

It has been determined that this Treasury decision is not a significant regulatory action as defined in EO 12866. Therefore, a regulatory assessment is not required. It has also been determined that section 553(b) of the Administrative Procedure Act (5 U.S.C. chapter 5) and the Regulatory Flexibility Act (5 U.S.C. chapter 6) do not apply to these regulations, and, therefore, a Regulatory Flexibility Analysis is not required. Pursuant to section 7805(f) of the Internal Revenue Code, the notice of proposed rulemaking preceding these regulations were sent to the Small Business Administration for comment on their impact on small business.

Drafting Information: The principal author of the temporary regulations is David B. Friedel of the Office of Assistant Chief Counsel (Corporate), IRS. Other personnel from the IRS and Treasury participated in their development.

Adoption of Amendments to the Regulations

Accordingly, 26 CFR parts 1 and 602 are amended as follows:

PART 1—INCOME TAXES

Paragraph 1. The authority citation for Part 1 is amended by removing the entries for ''1.382–2'' and ''1.382–2T'' and adding entries in numerical order to read as follows:

Authority: 26 U.S.C. 7805 * * *

Section 1.382–2 also issued under 26 U.S.C. 382(k)(1), (l)(3), (m), and 26 U.S.C. 383.

Section 1.382–2T also issued under 26 U.S.C. 382(g)(4)(C), (i), (k)(1) and (6), (l)(3), (m), and 26 U.S.C. 383.* * *

Section 1.382–5T also issued under 26 U.S.C. 382(m).* * *

Section 1.382–8T also issued under 26 U.S.C. 382(m).* * *

Par. 2. Section 1.382–1 is amended by:

a. Adding an entry for § 1.382–2, paragraph (a)(1)(iv).

b. Revising the entry for § 1.382–2, paragraph (a)(3)(i).

c. Adding entries for § 1.382–2T, paragraphs (f)(1)(i) through (f)(1)(iii).

d. Adding entries for §§ 1.382–5T and 1.382–8T.

§ 1.382–1 Table of contents.

* * * * *

§ 1.382–2 General rules for ownership change.

(a) * * *

(1) * * *

(iv) End of separate accounting for losses and credits of distributor or transferor loss corporation.

* * * * *

§ 1.382–2T Definition of ownership change under section 382, as amended by the Tax Reform Act of 1986 (temporary).

* * * * *

(f) * * *

(1) * * *

(i) In general.

(ii) End of separate accounting for losses and credits of distributor or transferor loss corporation.

(iii) Application to other successor corporations.

* * * * *

§ 1.382–5T Section 382 limitation (temporary).

(a) Scope.

(b) Computation of value.

(c) Short taxable year.

(d) Successive ownership changes and absorption of a section 382 limitation.

(1) In general.

(2) Recognized built-in gains and losses.

(3) Effective date.
(e) Controlled groups.
(f) Effective date.

* * * * *

§ 1.382–8T Controlled groups (temporary).

(a) Introduction.
(b) Controlled group loss and controlled group with respect to a controlled group loss.
(c) Computation of value.
(1) Reduction in value.
(2) Restoration of value.
(3) Reduction in value by the amount restored.
(4) Appropriate adjustments.
(5) Certain reductions in the value of members of a controlled group.
(d) No double reduction.
(e) Definitions and nomenclature.
(1) Definitions in Section 382 and the regulations thereunder.
(2) Controlled group.
(3) Component member.
(4) Predecessor and successor corporation.
(f) Coordination between consolidated groups and controlled groups.
(g) Examples.
(h) Time and manner of filing election to restore.
(1) Statement required.
(2) Revocation of election.
(3) Filing by component member.
(i) [Reserved]
(j) Effective date.
(1) In general.
(2) Transition rule.
(i) In general.
(ii) Special transition rules for controlled groups that had ownership changes before January 29, 1991.
(3) Amended returns.

Par. 3. Section 1.382–2 is amended as follows:

(a) The first sentence of paragraph (a)(1)(iii) is amended by removing the language ''Pre-change losses'' and adding ''Except as provided in § 1.382–2T(f)(1)(ii), pre-change losses'' in its place.

(b) Paragraph (a)(1)(iv) is added.

(c) The text of § 1.382–2T(f)(18)(i) is redesignated as the text of § 1.382–2(a)(3)(i).

(d) Newly designated paragraph (a)(3)(i) is amended by adding three sentences at the end.

The additions read as follows:

§ 1.382–2 General rules for ownership change.

(a) * * *
(1) * * *
(iv) *End of separate accounting for losses and credits of distributor or transferor loss corporation.* For further guidance, see § 1.382–2T(f)(1)(ii).

* * * * *

(3) * * * (i) * * * Solely for purposes of determining the percentage of stock owned by a person, each share of all the outstanding shares of stock that have the same material terms is treated as having the same value. Thus, for example, a control premium or blockage discount is disregarded in determining the percentage of stock owned by any person. The previous two sentences of this paragraph (a)(3)(i) apply to any testing date occurring on or after January 29, 1991.

* * * * *

Par. 4. Section 1.382–2T is amended as follows:

(a) Paragraph (e)(2)(iv) *Example (1)* is amended by removing the last sentence.

(b) Paragraph (e)(2)(iv) *Example (2)(ii)* is amended by adding a sentence at the end.

(c) Paragraph (e)(2)(iv) *Example (2)(iii)* is amended by removing the language '', but must be separately accounted for under § 1.382–2(a)(1)(iii) of this section'' from the last sentence.

(d) The text following the heading of paragraph (f)(1) is designated as paragraph (f)(1)(i) and a heading for newly designated paragraph (f)(1)(i) is added.

(e) Paragraphs (f)(1)(ii) and (f)(1)(iii) are added.

(f) Paragraph (f)(4) is amended by removing the word ''loss'' and by adding two sentences at the end.

(g) Paragraph (f)(5) is amended by adding two sentences at the end.

(h) A sentence is added after the heading of paragraph (f)(18)(i).

(i) Paragraph (h)(2)(i)(A) is amended by adding the language ''and solely for the purposes of determining whether a loss corporation has an ownership change'' immediately after ''except as otherwise provided in this section,''.

The additions read as follows:

§ 1.382–2T Definitions of ownership change under section 382, as amended by the Tax Reform Act of 1986 (temporary).

* * * * *

(e) * * *
(2) * * *
(iv) * * *
Example (2) * * *
(ii) * * * See paragraph (f)(1)(ii) of this section for rules that end separate accounting for L_1's pre-change losses on any testing date occurring on or after January 29, 1991.
(f) * * *
(1) * * *
(i) *In general.* * * *
(ii) *End of separate accounting for losses and credits of distributor or transferor loss corporation.* The separate tracking of owner shifts of the stock of an acquiring corporation required by § 1.382–2(a)(1)(iii) with respect to the net operating loss carryovers and other attributes described in § 1.382–2(a)(1)(ii) ends when a fold-in event occurs. A fold-in event is either an ownership change of the distributor or transferor corporation in connection with, or after, the transaction to which section 381(a) applies, or a period of 5 consecutive years following the section 381(a) transaction during which the distributor or transferor corporation has not had an ownership change. Starting on the day after the earlier of the change date (but not earlier than the day of the section 381(a) transaction) or the last day of the 5 consecutive year period, the losses and other attributes of the distributor or transferor corporation are treated as losses and attributes of the acquiring corporation for purposes of determining whether an ownership change occurs with respect to such losses. Also, for purposes of determining the beginning of the acquiring corporation's testing period, such losses are considered to arise either in a taxable year that begins not earlier than the later of the day following the change date or the day of the section 381(a) transaction, or in a taxable year that begins 3 years before the end of the 5 consecutive year period. Pre-change losses of a distributor or transferor corporation that are subject to a limitation under section 382 continue to be subject to the limitation notwithstanding the occurrence of a fold-in event. Any ownership change that occurs in connection with, or subsequent to, the section 381 transaction may result in an additional, lesser limitation with respect to such pre-change losses. This paragraph (f)(1)(ii) applies to any testing date occurring on or after January 29, 1991.

(iii) *Application to other successor corporations.* Section 1.382–2(a)(1) (relating to the definition of loss corporation) and this paragraph (f)(1) also apply, as the context may require, to successor corporations other than successors in section 381(a) transactions. For example, if a corporation receives assets from the loss corporation that have basis in excess of value, the recipient corporation's basis for the assets is determined, directly or indirectly, in whole or in part, by reference to the loss corporation's basis, and the amount by which basis exceeds value is material, the recipient corporation is a successor corporation subject to § 1.382–2(a)(1) and this paragraph (f)(1). This paragraph (f)(1)(iii) applies to any testing date occurring on or after January 1, 1997.

* * * * *

(4) *Successor corporation.* * * * A successor corporation also includes, as the context may require, a corporation which receives an asset or assets from another corporation if the corporation's basis for the asset(s) is determined, directly or indirectly, in whole or in part, by reference to the other corporation's basis and the amount by which basis differs from value is, in the aggregate, material. The previous sentence of this paragraph (f)(4) applies to any testing date occurring on or after January 1, 1997.

(5) *Predecessor corporation.* * * * A predecessor corporation also includes, as the context may require, a corporation which transfers an asset or assets to another corporation if the transferee's basis for the asset(s) is determined, directly or indirectly, in whole or in part, by reference to the corporation's basis and the amount by which basis differs from value is, in the aggregate, material. The previous sentence of this paragraph (f)(5) applies to any testing date occurring on or after January 1, 1997.

* * * * *

(18) * * * (i) * * * For further guidance, see § 1.382–2(a)(3)(i).

* * * * *

Par. 5. Sections 1.382–5T and 1.382–8T are added to read as follows:

§ 1.382–5T Section 382 limitation (temporary).

(a) *Scope.* Following an ownership change, the section 382 limitation for any post-change year is an amount equal to the value of the loss corporation multiplied by the long-term tax-exempt rate that applies with respect to the ownership change, and adjusted as required by section 382 and the regulations thereunder. See, for example, section 382(b)(2) (relating to the carryforward of unused section 382 limitation), section 382(b)(3)(B) (relating to the section 382 limitation for the post-change year that includes the change date), section 382(m)(2) (relating to short taxable years), and section 382(h) (relating to recognized built-in gains and section 338 gains).

(b) *Computation of value.* [Reserved]

(c) *Short taxable year.* The section 382 limitation for any post-change year that is less than 365 days is the amount that bears the same ratio to the section 382 limitation determined under section 382(b)(1) as the number of days in the post-change year bears to 365. The section 382 limitation, as so determined, is adjusted as required by section 382 and the regulations thereunder. This paragraph (c) does not apply to a 52–53 week taxable year that is less than 365 days unless a return is required under section 443 (relating to short periods) for such year.

(d) *Successive ownership changes and absorption of a section 382 limitation*—(1) *In general.* If a loss corporation has two (or more) ownership changes, any losses attributable to the period preceding the earlier ownership change are treated as pre-change losses with respect to both ownership changes. Thus, the later ownership change may result in a lesser (but never in a greater) section 382 limitation with respect to such losses. In any case, the amount of taxable income for any post-change year that can be offset by pre-change losses may not exceed the section 382 limitation for such ownership change, reduced by the amount of taxable income offset by pre-change losses subject to any earlier ownership change(s).

(2) *Recognized built-in gains and losses.* [Reserved]

(3) *Effective date.* This paragraph (d) applies to taxable years of a loss corporation beginning on or after January 1, 1997.

(e) *Controlled groups.* See § 1.382–8T for rules for determining the value of a loss corporation that is a member of a controlled group.

(f) *Effective date.* Except as otherwise provided, this section applies to a loss corporation that has an ownership change to which section 382(a), as amended by the Tax Reform Act of 1986, applies.

§ 1.382–8T Controlled groups (temporary).

(a) *Introduction.* This section provides rules to adjust the value of a loss corporation that is a member of a controlled group of corporations on a change date so that the same value is not included more than once in computing the limitations under section 382 for the loss corporations that are members of the controlled group. In general, the adjustment is made under paragraph (c) of this section by reducing the value of the loss corporation by the value of the stock of each component member of the controlled group that the loss corporation owns immediately after the ownership change. The loss corporation's value may, however, be increased under paragraph (c) of this section by any amount of value that the other member elects to restore to the loss corporation.

(b) *Controlled group loss and controlled group with respect to a controlled group loss.* A controlled group loss is a pre-change loss (or a net unrealized built-in loss) of a loss corporation that is attributable to a taxable year of the corporation with respect to which the corporation is a component member of a controlled group (as defined by paragraphs (e) (2) and (3) of this section). The controlled group with respect to each controlled group loss is composed of the loss corporation and each other corporation that is a component member of a controlled group that includes the loss corporation both—

(1) With respect to the taxable year to which the controlled group loss is attributable; and

(2) On the date the loss corporation has an ownership change.

(c) *Computation of value.* For purposes of computing the limitation under section 382 with respect to each controlled group loss, the value of the stock of each component member of the controlled group with respect to that loss is determined immediately before the ownership change, and is adjusted by applying the following rules:

(1) *Reduction in value.* The value of the stock of each component member is reduced by the value (immediately before the ownership change and without regard to any restoration of value or other adjustment under this section) of the stock of any other component member directly owned by the component member immediately after the ownership change.

(2) *Restoration of value.* After the value of the stock of each component member is reduced pursuant to paragraph (c)(1) of this section, the value of the stock of each component member is increased by the amount of value, if any, restored to the component member by another component member (the electing member) pursuant to this paragraph (c)(2). The electing member may elect to restore value to another component member in an amount that does not exceed the lesser of—

(i) The sum of—

(A) The value, determined immediately before the ownership change, of the electing member's stock (after adjustment under paragraph (c)(1) of this section and before any restoration of value under this paragraph (c)(2)); plus

(B) Any amount of value restored to the electing member by another component member under this paragraph (c)(2); or

(ii) The value, determined immediately before the ownership change, of the electing member's stock (without regard to any adjustment under this section) that is directly owned by the other component member immediately after the ownership change.

(3) *Reduction in value by the amount restored.* The value of the stock of the electing member is reduced by any

amount of value that the electing member elects to restore under paragraph (c)(2) of this section to another component member.

(4) *Appropriate adjustments.* Appropriate additional adjustments consistent with paragraphs (c)(1), (2), and (3) of this section must be made to prevent any duplication of value. Thus, for example, adjustments must be made to reflect—

(i) Any indirect ownership interest in another component member;

(ii) Any cross ownership of stock by component members of the controlled group with respect to the controlled group loss; and

(iii) Any value used to determine a limitation under section 382 with respect to controlled group losses from the same period.

(5) *Certain reductions in the value of members of a controlled group.* A loss corporation that has an ownership change is required to make adjustments consistent with this paragraph (c) with respect to its stock if the stock of another corporation in which it had a direct or indirect ownership interest was disposed of before the ownership change, and;

(i) Both corporations were component members of a controlled group—

(A) With respect to a taxable year to which a controlled group loss of the loss corporation is attributable; and

(B) At any time during the 2 year period before the ownership change; and

(ii) Both corporations are component members of a controlled group at any time during the 2 year period following the ownership change.

(d) *No double reduction.* To the extent consistent with the purposes of this section, section 382 and this section shall not be applied to duplicate a reduction in the value of a loss corporation. Thus, for example, if the value of a loss corporation is reduced under section 382(l)(1) to reflect a capital contribution of stock of a component member, it is not again reduced by such amount under paragraph (c)(1) of this section. If this paragraph (d) applies to prevent a reduction in value from being duplicated, the application of the other rules of this section, such as those relating to the restoration of value, is correspondingly limited in a manner consistent with the principles of this section.

(e) *Definitions and nomenclature*—(1) *Definitions in section 382 and the regulations thereunder.* Except as otherwise provided, the definitions and nomenclature contained in section 382 and the regulations thereunder apply to this section.

(2) *Controlled group.* Controlled group has the same meaning as in section 1563(a), determined by substituting ''50 percent'' for ''80 percent'' each place that it appears, and without regard to section 1563(a)(4).

(3) *Component member.* Component member has the same meaning as in section 1563(b), determined by substituting ''December 31 (or the change date, if earlier)'' for ''December 31'' each place it appears, and without regard to section 1563 (b)(2), (b)(3)(C), and (b)(4).

(4) *Predecessor and successor corporation.* As the context may require, a reference to a corporation, or component member includes a reference to a predecessor or successor corporation.

(f) *Coordination between consolidated groups and controlled groups.* Some or all of the component members of a controlled group may also be members of a consolidated group, and a controlled group loss may be subject to a consolidated section 382 limitation or subgroup section 382 limitation determined under § 1.1502–93T. Except as otherwise provided in this paragraph (f) and §§ 1.1502–91T through 1.1502–99T, § 1.1502–93T applies instead of this section when both sections, by their terms, are otherwise applicable. This section is applicable and may require an adjustment to value if a member of a consolidated group, a loss group, or a loss subgroup (as those terms are defined in §§ 1.1502–1(h) and 1.1502–91T) is also a component member of a controlled group with respect to a controlled group loss. Solely for purposes of applying this section, a consolidated group, loss group, or loss subgroup is treated as a single corporation. Thus to determine the limitation with respect to any portion of the pre-change consolidated attributes or pre-change subgroup attributes of the loss group or loss subgroup that is a controlled group loss, the consolidated section 382 limitation or subgroup section 382 limitation is computed by treating the loss group or the loss subgroup as a single corporation, and adjusting value in accordance with paragraph (c) of this section. See paragraph (g) *Example 4* of this section.

(g) *Examples.* For purposes of the examples in this section, unless otherwise stated, the nomenclature and assumptions of the examples in § 1.382–2T(b) apply, all corporations file separate income tax returns on a calendar year basis, the only 5-percent shareholder of a corporation is a public group, and the facts set forth the only owner shifts with respect to the corporations during the testing period.

Example 1. Controlled group with respect to a controlled group loss. (a) Public L owns all of the L stock, L and Public L1 own 30 percent and 70 percent, respectively, of the L1 stock, and L1 owns all of the corporation T stock. L1 has a net operating loss arising in Year 1 that is carried over to Year 4. L has a net operating loss arising in Year 2 that is carried over to Year 4. On August 1, Year 3, L acquires 30 percent of the stock of L1, thereby increasing its percentage ownership interest in L1 to 60 percent. On December 1, Year 3, L1 purchases all of the stock of corporation S from Public S. On November 1, Year 4, P acquires all of the L stock. The acquisition by P of all of the L stock on November 1, Year 4, causes ownership changes of both L and L1 under the rules of § 1.382–2T. The following is a graphic illustration of these facts.

BILLING CODE 4830–01–U

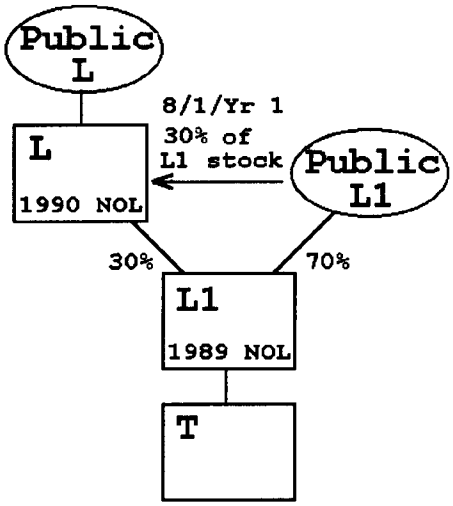

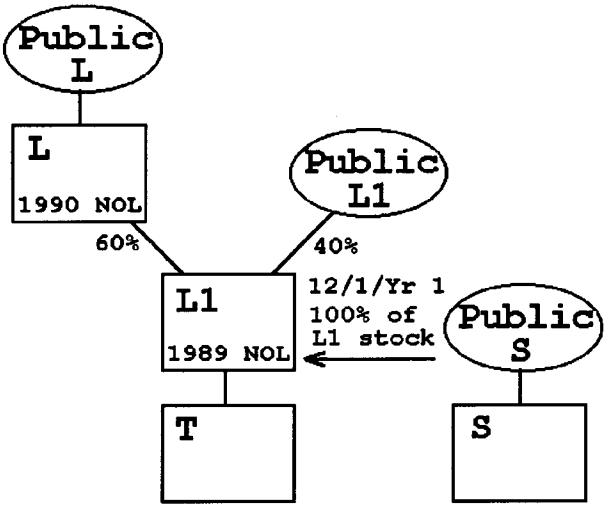

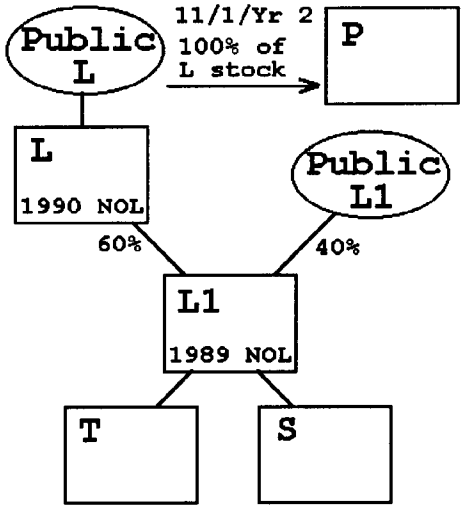

BILLING CODE 4830–01–C

(b)(1) Under paragraph (b) of this section, the Year 1 net operating loss carryover of L1 is a controlled group loss because L1 is a component member of a controlled group with respect to Year 1, the year to which the loss is attributable. L1 and T compose a controlled group with respect to the net operating loss carryover because L1 and T are component members of a controlled group both—

(A) With respect to the taxable year to which L1's net operating loss carryover is attributable (i.e., Year 1); and

(B) On November 1, Year 4, L1's change date. Although L and S are component members of L1's controlled group on L1's change date, they are not component members of the controlled group with respect to the Year 1 net operating loss carryover because they were not component members with respect to the year to which the net operating loss carryover is attributable.

(2) The value of L1's stock must therefore be adjusted in accordance with paragraph (c) of this section to take into account an adjustment with respect to the T stock (but not the S stock) in computing L1's limitation under section 382 with respect to its net operating loss carryover.

(c) Although L is a member of a controlled group composed of L, L1, S, and T on November 1, Year 4, L's change date, it is not a component member of a controlled group with respect to Year 2, the taxable year to which its net operating loss carryover is attributable. Therefore, L's Year 2 net operating loss carryover is not a controlled group loss under paragraph (b) of this section and the value of L's stock is not adjusted in accordance with paragraph (c) of this section to compute L's limitation under section 382 with respect to the Year 2 net operating loss carryover.

Example 2. Adjustments to value of the controlled group members. (a) Since Year 1, A has owned all of the stock of L, L and B have owned 80 percent and 20 percent, respectively, of the stock of corporation P, and P and C have owned 75 percent and 25 percent, respectively, of the stock of L1. L and L1 each has a net operating loss for the Year 6 taxable year that is carried over to its respective Year 7 taxable year. On December 1, Year 7, A sells all of the L stock to D. The sale results in ownership changes of both L and L1. Immediately before the ownership changes, the total value of the L1 stock is $40, the total value of the P stock (including the value of its L1 stock) is $100, and the total value of the L stock (including the value of the P stock) is $200. The following is a graphic illustration of these facts.

BILLING CODE 4830–01–U

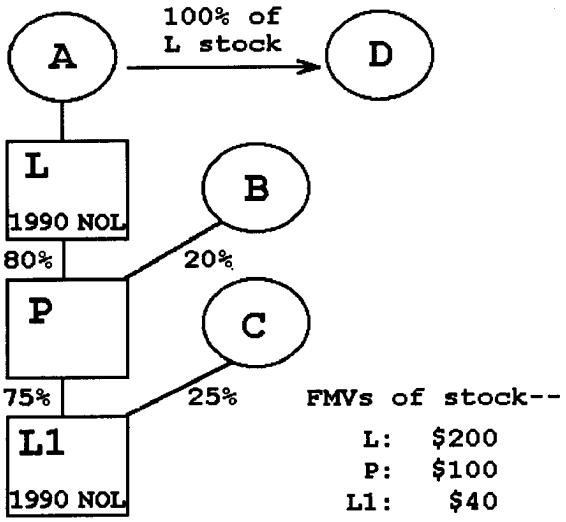

BILLING CODE 4830–01–C

(b) Under paragraph (b) of this section, the Year 6 net operating loss carryovers of each of L and L1 are controlled group losses because each of L and L1 is a component member of a controlled group with respect to Year 6, the year to which the losses are attributable. L, P, and L1 compose controlled groups with respect to both Year 6 net operating loss carryovers because L, P, and L1 are component members of a controlled group both—

(1) With respect to the taxable years to which the net operating loss carryovers are attributable (i.e., Year 6); and

(2) On December 1, Year 7, the change date.

(c) The value of the stock of L1 for purposes of determining its limitation under section 382 with respect to its net operating loss carryover from Year 6 is $40. L1 does not elect to restore any value to P under paragraph (c)(2) of this section.

(d) The value of the stock of P ($100) is reduced under paragraph (c)(1) of this section by the value of the stock of L1 that it directly owns, $30 (75%×$40). Following the adjustment, the value of the stock of P is $70. P elects to restore this entire $70 of value to L.

(e) The value of the stock of L, $200, is reduced under paragraph (c)(1) of this section by the value of the stock of P it directly owns, i.e., $80 (80%×$100), and increased under paragraph (c)(2) of this section by the amount P elects to restore to L, i.e., $70. Thus, the value of the L stock for purposes of determining L's limitation under section 382 with respect to its net operating loss carryover from Year 6 is $190 ($200 − $80+$70).

Example 3. Limitation on restoration of value. (a) The facts are the same as in *Example 2,* except that L1 elects to restore $20 to P. For purposes of determining L1's limitation under section 382 with respect to the Year 6 net operating loss carryover, the value of the stock of L1 is $20 ($40 − $20) because the value of its stock is reduced under paragraph (c)(3) of this section by the $20 of value it elects to restore to P.

(b) The value of the stock of P ($100) is reduced under paragraph (c)(1) of this section by the value of the L1 stock it directly owns ($30), and is increased under paragraph (c)(2) of this section by the value that L1 elects to restore to P ($20). Thus, the value of the P stock is $90 ($100 − $30+$20).

(c)(1) P elects to restore to L the maximum value permitted under this section. The value of the stock of L, $200, is reduced under paragraph (c)(1) of this section by the value of the P stock it directly owns ($80), and is increased by the value that P elects to restore to L. P may elect to restore to L the lesser of—

(A) The sum of the value of its stock immediately after adjustment under paragraph (c)(1) of this section (i.e., $70) plus the value restored to it by L1 (i.e., $20) (a total of $90); or

(B) The value of the P stock (without regard to the adjustment required by paragraphs (c)(1) and (2) of this section) that is directly owned by L immediately before the ownership change (i.e., $80).

(2) Thus, $80 is the maximum amount that P may elect to restore to L. Following the restoration of value by P, the value of the L stock for purposes of determining L's limitation under section 382 is $200 ($200 − $80 + $80).

Example 4. Coordination with consolidated return regulations. (a) P and its wholly owned subsidiary L file a consolidated return. L owns 79 percent of the outstanding

stock of L1. P acquired the stock of L in Year 1 and L acquired the stock of L1 in Year 2. The P consolidated group has a consolidated net operating loss arising in the Year 6 consolidated return year that is carried over to Year 8. L1 has a net operating loss arising in its Year 6 taxable year that is also carried over to Year 8. On January 1, Year 8, the P consolidated group has an ownership change under § 1.1502–92T(b)(1)(i) and L1 has an ownership change under § 1.382–2T.

(b)(1) Under paragraph (b) of this section, the Year 6 net operating loss carryover of the P group is a controlled group loss because P, L, and L1 are component members of a controlled group with respect to Year 6, the year to which the loss is attributable. P, L, and L1 compose a controlled group with respect to the Year 6 net operating loss carryover of the P loss group because they are component members of a controlled group both—

(A) With respect to the taxable years to which the net operating loss carryover is attributable (i.e., Year 6); and

(B) On January 1, Year 8, the P group's change date.

(2) Because P and L compose a loss group (within the meaning of § 1.1502–91T(c)) with respect to its Year 6 net operating loss carryover, the P loss group must compute a consolidated section 382 limitation with respect to its Year 6 net operating loss carryover as a result of the ownership change.

(c) In computing the consolidated section 382 limitation under § 1.1502–93T with respect to the Year 6 net operating loss carryover, the value of the P stock immediately before the ownership change is reduced under paragraphs (c)(1) and (f) of this section by the value immediately before the ownership change of the L1 stock directly owned by L immediately after the ownership change. L1 may, however, elect to restore such value to the P consolidated group to the extent permitted under paragraph (c)(2) of this section.

Example 5. Appropriate adjustments for indirect ownership interest. (a) Individual A owns all of the stock of L, L owns an 80 percent interest in the capital and profits of partnership PS, and PS owns 75 percent of the stock of L1. Both L and L1 have net operating losses for the Year 1 taxable year that are carried over to their respective Year 2 taxable years. On December 19, Year 2, A sells all of the L stock to an unrelated individual. The sale results in an ownership change of L and L1.

(b) Under paragraph (b) of this section, the Year 1 net operating loss carryovers of each of L and L1 are controlled group losses because each of L and L1 is a component member of a controlled group with respect to Year 1, the year to which the losses are attributable. L and L1 compose controlled groups with respect to each corporation's net operating loss carryovers because L and L1 are component members of a controlled group both—

(1) With respect to the taxable years to which the net operating loss carryovers are attributable (i.e., Year 1); and

(2) On December 19, Year 2, the change date.

(c) L has an indirect ownership interest in L1 which, under paragraph (c)(4) of this section, must be taken into account in applying this section. As a result, the value of the L stock for purposes of determining its limitation under section 382 with respect to the Year 1 net operating loss carryover must be reduced by the value of L's indirect ownership interest in the L1 stock (60 percent) that it owns through PS immediately before the ownership change, and is increased by the amount (if any) that L1 elects to restore to L under paragraph (c)(2) of this section. The value of L1 is reduced under paragraph (c)(3) of this section to the extent that L1 elects to restore value to L.

(h) *Time and manner of filing election to restore*—(1) *Statement required.* The election to restore value described in paragraph (c)(2) of this section must be in the form set forth below. It must be signed on behalf of both the electing member and the corporation to which such value is restored by persons authorized to sign their respective income tax returns. (The common parent of a consolidated group must make the election on behalf of the group.) It must be filed by the loss corporation with its income tax return for the taxable year in which the ownership change occurs (or with an amended return for such year filed on or before the due date (including extensions) of the income tax return of any component member with respect to the taxable year in which the ownership change occurs). The statement must provide that: ''THIS IS AN ELECTION UNDER § 1.382–8T OF THE INCOME TAX REGULATIONS TO RESTORE ALL OR PART OF THE VALUE OF [insert name and E.I.N. of the electing member] TO [insert name and E.I.N. of the corporation to which value is restored]. The statement must also—

(i) Identify the change date for the loss corporation in connection with which the election is made;

(ii) State the value of the electing member's stock (without regard to any adjustment under paragraph (c) of this section) immediately before the ownership change;

(iii) State the amount of any reduction required under paragraph (c)(1) of this section with respect to stock of the electing member that is owned directly or indirectly by the corporation to which value is restored;

(iv) State the amount of value that the electing member elects to restore to the corporation; and

(v) State whether the value of either component member's stock was adjusted pursuant to paragraph (c)(4) of this section.

(2) *Revocation of election.* An election made under this section is revocable only with the consent of the Commissioner.

(3) *Filing by component member.* An electing member must attach a copy of the statement described in paragraph (h)(1) of this section to its income tax return (or amended return) for the taxable year which includes the change date in connection with which the election is made.

(i) [Reserved]

(j) *Effective date*—(1) *In general.* This section applies to a loss corporation that has an ownership change with respect to a controlled group loss on or after January 1, 1997.

(2) *Transition rule*—(i) *In general.* The members of a controlled group on January 1, 1997, that have had an ownership change with respect to a controlled group loss before January 1, 1997, must determine the limitations under section 382 for any post-change year with respect to controlled group losses by using a reasonable method to preclude the value of stock of a component member that was owned directly or indirectly by another member immediately after an ownership change from being taken into account more than once in determining the limitations under section 382 with respect to controlled group losses. If such a reasonable method was not used for a post-change year, subject to the exception in paragraph (j)(3) of this section, the members of the controlled group described in the preceding sentence must reduce their limitations under section 382 for post-change years for which the income tax return is filed after January 1, 1997, to recapture, as quickly as possible, any limitation that members took into account in excess of the amount that would be allowable under this section.

(ii) *Special transition rule for controlled groups that had ownership changes before January 29, 1991.* For purposes of this section, in the case of an ownership change occurring before January 29, 1991, the controlled group with respect to a controlled group loss does not include a corporation that is not a component member of the controlled group on January 29, 1991. Thus, in the case of an ownership change occurring before January 29, 1991, paragraph (c) of this section does not require that a loss corporation that is a component member of a controlled group to disregard the value of stock of another corporation directly owned immediately after the ownership change in determining the value of its own stock unless the other corporation is a component member of the controlled group on January 29, 1991.

(3) *Amended returns.* A taxpayer that has had an ownership change before January 1, 1997, may file an amended return for any taxable year to modify the amount of a limitation under section 382 with respect to a controlled group loss only if—

(i) The modification complies with the rules contained in this section for computing a limitation under section 382;

(ii) Any other component member of the controlled group with respect to the controlled group loss who elects to restore value and whose taxable income is affected by the election to restore value also files amended returns that comply with such rules; and

(iii) Corresponding adjustments are made in amended returns for all taxable years ending after December 31, 1986.

PART 602—OMB CONTROL NUMBERS UNDER THE PAPERWORK REDUCTION ACT

Par. 6. The authority citation for part 602 continues to read as follows:

Authority: 26 U.S.C. 7805.

Par. 7. In § 602.101, paragraph (c) is amended by adding an entry in numerical order to the table to read as follows:

§ 602.101 OMB Control numbers.

* * * * *

(c) * * *

CFR part or section where identified or described	Current OMB control No.
* * * * *	
1.382.8T	1545–1434
* * * * *	

Margaret Milner Richardson,

Commissioner of Internal Revenue.

Approved: May 31, 1996.

Leslie Samuels,

Assistant Secretary of the Treasury.

[FR Doc. 96–15825 Filed 6–26–96; 8:45 am]

BILLING CODE 4830–01–U

26 CFR Parts 1 and 602

[TD 8677]

RIN 1545–AU35

Consolidated Returns—Limitations on the use of Certain Losses and Deductions

AGENCY: Internal Revenue Service (IRS), Treasury.

ACTION: Final and temporary regulations.

SUMMARY: This document contains final and temporary amendments to the consolidated return regulations relating to deductions and losses of members. The temporary amendments concern the method for computing the limitations with respect to separate return limitation year (SRLY) losses. They also concern the rules relating to carryover and carryback of losses to consolidated and separate return years and to the built-in deduction rules. Final amendments are made amending definitions and redesignating sections displaced by temporary regulations. The text of these temporary regulations also serves as the text of the proposed regulations set forth in the notice of proposed rulemaking on this subject in the Proposed Rules section of this issue of the Federal Register.

DATES: These amendments are effective June 27, 1996.

For dates of application and special transition rules, see Effective Dates under **SUPPLEMENTARY INFORMATION.**

FOR FURTHER INFORMATION CONTACT: David B. Friedel at (202) 622–7550 (not a toll-free number).

SUPPLEMENTARY INFORMATION:

Paperwork Reduction Act

The collection of information contained in the temporary regulations has been reviewed and approved by the Office of Management and Budget in accordance with the Paperwork Reduction Act (44 U.S.C. 3507) under the control number 1545–1237. Section 1.1502–21T(b)(3) requires a response from certain consolidated groups. The IRS requires the information to assure that an election to relinquish a carryback period is properly documented. Reponses to this collection of information are required to obtain a benefit (relating to the carryover of losses which would otherwise be carried back).

An agency may not conduct or sponsor, and a person is not required to respond to, a collection of information unless the collection of information displays a valid control number.

For further information concerning this collection of information, and where to submit comments on the collection of information and the accuracy of the estimated burden, and suggestions for reducing this burden, please refer to the preamble to the cross-referencing notice of proposed rulemaking published in the Proposed Rules section of this issue of the Federal Register.

Books or records relating to a collection of information must be retained as long as their contents may become material in the administration of any Internal Revenue law. Generally, tax returns and tax return information are confidential, as required by 26 U.S.C. 6103.

Background and Explanation of Provisions

On February 4, 1991, the IRS and Treasury published in the Federal Register a notice of proposed rulemaking (CO–078–90, 56 FR 4228) setting forth amendments to the rules regarding the net operating losses, built-in deductions, and capital losses of consolidated groups, including rules regarding the carryover and carryback of losses to consolidated and separate return years. Some of the amendments are clarifying, and some change the existing rules. The principal changes related to losses arising in (or carried to) SRLY years. The preamble to the proposed amendments explains the proposed changes in detail. The IRS and Treasury also published Notice 91–27 (1991–2 C.B. 629) to advise of intended modifications to the proposed amendments.

Generally, section 1503(a) requires that a consolidated group determine its tax in accordance with the regulations under section 1502 prescribed before the last day prescribed by law for the filing of its tax return. Many of the proposed amendments have proposed effective dates of January 29, 1991, and other transitional rules for their application. Because of this effective date, consolidated groups have been uncertain whether the existing rules or the proposed rules (if adopted) will determine their use of losses for consolidated return years ending on or after January 29, 1991.

To address the uncertainty, the IRS and Treasury are issuing this Treasury decision to adopt temporary amendments to the rules regarding a consolidated group's losses, including the carryover and carryback of SRLY losses. The temporary amendments are substantially identical to the rules proposed on January 29, 1991. A more detailed discussion of the effective dates of the temporary amendments, including special transitional rules, is set forth below under *Effective Dates.*

These temporary amendments primarily address the uncertainty created by the proposed effective dates. They do not address the comments on the proposed amendments. Many of these comments are still under consideration.

As companions to this Treasury decision, the IRS and Treasury also issue two other sets of temporary regulations under sections 382 and 383

concerning the use of losses and deductions by consolidated groups and by members of controlled groups. See TD 8678 and TD 8679 published elsewhere in this issue of the Federal Register.

Effective Date

The temporary amendments are generally effective for consolidated return years beginning on or after January 1, 1997. However, two important changes are made to the effective date provisions set forth in the proposed rules.

As proposed, the amendments generally applied to consolidated return years ending on or after January 29, 1991, without regard to the year in which the losses arose and without regard to whether the losses are subject to the SRLY rules. An exception to the general effective date rules was made for the proposed SRLY rules and built-in deduction rules, which generally applied only to losses and deductions of corporations that became members (and acquisitions occurring) on or after January 29, 1991, without regard to when they arose. Thus, the proposed amendments required the losses and deductions of members acquired before January 29, 1991, to remain subject to the existing SRLY limitations.

The temporary amendments revise this treatment. Losses and deductions of a member (including SRLY losses) carried to consolidated return years beginning on or after January 1, 1997, are governed by the temporary amendments, regardless of the year in which the loss or deduction was recognized, and regardless of when the member with the SRLY loss became a member of the group.

The temporary amendments also contain rules relating to consolidated return years ending on or after January 29, 1991, and beginning before January 1, 1997. Specifically, a consolidated group may apply the temporary amendments to those consolidated return years provided that three principal conditions are met: (1) all the temporary amendments must be applied consistently on the group's final return (original or amended return) for each such year for which the statute of limitations does not preclude the filing of an amended return on January 1, 1997; (2) the temporary amendments relating to the treatment of built-in deductions and SRLY losses must be applied with respect to the losses and deductions of those corporations that became members of the group, and to acquisitions occurring, on or after January 29, 1991, and only with respect to such losses and deductions; and (3) appropriate adjustments must be made in the earliest subsequent open year to reflect any inconsistency in a year for which the statute of limitations precludes the filing of an amended return on January 1, 1997. Until consolidated return years beginning on or after January 1, 1997, the rules of the existing regulations relating to the treatment of built-in deductions and SRLY losses continue to apply to corporations that became members before, and to acquisitions occurring before, January 29, 1991. See § 1.1502–21T(g)(3).

Special Analysis

It has been determined that this Treasury decision is not a significant regulatory action as defined in EO 12866. Therefore, a regulatory assessment is not required. It is hereby certified that these regulations do not have a significant economic impact on a substantial number of small entities. This certification is based on the fact that these regulations will primarily affect affiliated groups of corporations that have elected to file consolidated returns, which tend to be larger businesses. Therefore, a Regulatory Flexibility Analysis under the Regulatory Flexibility Act (5 U.S.C. chapter 6) is not required. Pursuant to section 7805(f) of the Internal Revenue Code, the notice of proposed rulemaking preceding these regulations were sent to the Small Business Administration for comment on their impact on small business.

Drafting Information

The principal author of these regulations is David B. Friedel of the Office of Assistant Chief Counsel (Corporate), IRS. Other personnel from the IRS and Treasury participated in their development.

Adoption of Amendments to the Regulations

Accordingly, 26 CFR parts 1 and 602 are amended as follows:

PART 1—INCOME TAXES

Paragraph 1. The authority citation for Part 1 is amended in part by adding citations in numerical order to read as follows:

Authority: 26 U.S.C. 7805 * * *

Section 1.1502–0 also issued under 26 U.S.C. 1502. * * *

Section 1.1502–1T also issued under 26 U.S.C. 1502.

Section 1.1502–2 also issued under 26 U.S.C. 1502. * * *

Section 1.1502–15T also issued under 26 U.S.C. 1502. * * *

Section 1.1502–21T also issued under 26 U.S.C. 1502.

Section 1.1502–22T also issued under 26 U.S.C. 1502.

Section 1.1502–23T also issued under 26 U.S.C. 1502. * * *

Section 1.1502–79T also issued under 26 U.S.C. 1502.

Section 1.1502–15A also issued under 26 U.S.C. 1502.

Section 1.1502–21A also issued under 26 U.S.C. 1502.

Section 1.1502–22A also issued under 26 U.S.C. 1502.

Section 1.1502–23A also issued under 26 U.S.C. 1502.

Section 1.1502–41A also issued under 26 U.S.C. 1502.

Section 1.1502–79A also issued under 26 U.S.C. 1502.* * *

Par. 2. In the list below, for each section indicated in the left column, remove the wording indicated in the middle column, and add the wording indicated in the right column.

Affected section	Remove	Add
1.469–1(h)(2)	1.1502–21 (consolidated net operating loss), and 1.1502–22 (consolidated net capital gain or loss).	1.1502–21T (Net operating losses (temporary)), and 1.1502–22T (consolidated net capital gain and loss (temporary)).
1.597–2(c)(5), first sentence	§§ 1.1502–15, 1.1502–21, and 1.1502–22	§§ 1.1502–15T, 1.1502–21T, and 1.1502–22T (or §§ 1.1502–15A, 1.1502–21A, and 1.1502–22A, as appropriate).
1.597–2(c)(5), second sentence	§§ 1.1502–15, 1.1502–21 or 1.1502–22	§§ 1.1502–15T, 1.1502–21T or 1.1502–22T (or §§ 1.1502–15A, 1.1502–21A or 1.1502–22A, as appropriate).
1.597–4(g)(3), fifth sentence	§§ 1.1502–15, 1.1502–21 and 1.1502–22	§§ 1.1502–15T, 1.1502–21T and 1.1502–22T (or §§ 1.1502–15A, 1.1502–21A and 1.1502–22A, as appropriate).

Affected section	Remove	Add
1.597–4(g)(3), sixth sentence	§§ 1.1502–15, 1.1502–21, or 1.1502–22	§§ 1.1502–15T, 1.1502–21T, or 1.1502–22T (or §§ 1.1502–15A, 1.1502–21A, or 1.1502–22A, as appropriate).
1.904(f)–3(a)	(or §§ 1.1502–21(b) and 1.1502–79(a))	(or § 1.1502–21T(b) (or §§ 1.1502–21A(b) and 1.1502–79A(a), as appropriate)).
1.904(f)–3(b)	(or §§ 1.1502–22 and 1.1502–79(b)	(or § 1.1502–22T(b) (or §§ 1.1502–22A and 1.1502–79A(b), as appropriate)).
1.1341–1(f)(2)(i)	§ 1.1502–2A	§ 1.1502–2A (as contained in the 26 C.F.R. edition revised as of April 1, 1996).
1.1502–9(a), seventh sentence	§ 1.1502–79	§ 1.1502–21T(b)(2) (or § 1.1502–79A, as appropriate).
1.1502–9(a), eighth sentence	§ 1.1502–79	§ 1.1502–21T(b)(1) (or § 1.1502–79A, as appropriate).
1.1502–9(f) Example 5(ii)	§ 1.1502–21(c)	§ 1.1502–21A(c)
1.1502–11(a)(2)	§ 1.1502–21	§§ 1.1502–21T (or 1.1502–21A, as appropriate).
1.1502–11(a)(3)	§ 1.1502–22	§§ 1.1502–22T (or 1.1502–22A, as appropriate).
1.1502–11(a)(4)	§ 1.1502–23	§§ 1.1502–23T (or 1.1502–23A, as appropriate).
1.1502–11(b)(2)(iii) Example 1(c)	§ 1.1502–79	§ 1.1502–21T (or § 1.1502–79A, as appropriate).
1.1502–11(b)(2)(iii) Example 2(d)	§ 1.1502–79	§§ 1.1502–21T and 1.1502–22T, respectively (or § 1.1502–79A, as appropriate).
1.1502–11(b)(2)(iii) Example 3(e)	§ 1.1502–79	§ 1.1502–21T (or § 1.1502–79A, as appropriate).
1.1502–12(b)	§ 1.1502–15 shall be taken into account as provided in that section.	§§ 1.1502–15A or 1.1502–15T shall be taken into account as provided in those sections.
1.1502–13(c)(7)(ii) Example 10(d)	§ 1.1502–21(c)	§ 1.1502–21T(c).
1.1502–13(g)(5) Example 4(b)	§ 1.1502–15	§ 1.1502–15T (or § 1.1502–15A, as appropriate).
1.1502–13(h)(2), Example 1(a)	§ 1.1502–21(c)	§ 1.1502–21T(c).
1.1502–13(h)(2), Example 1(b)	§ 1.1502–21(c)	§ 1.1502–21T(c).
1.1502–13(h)(2), Example 2(a)	§ 1.1502–15	§ 1.1502–15T.
1.1502–13(h)(2), Example 2(b)	1.1502–22	1.1502–22T.
1.1502–15(a)(1), first sentence	§ 1.1502–21(c)	§ 1.1502–21A(c).
1.1502–15(a)(1), first sentence	§ 1.1502–22(c)	§ 1.1502–22A(c).
1.1502–15(a)(1), second sentence	Under §§ 1.1502–21, 1.1502–22, and 1.1502–79.	Under §§ 1.1502–21A, 1.1502–22A, and 1.1502–79A (or §§ 1.1502–21T and 1.1502–22T, as appropriate).
1.1502–15(a)(1), second sentence	In § 1.1502–21(c) or § 1.1502–22(c) (as the case may be).	In §§ 1.1502–21T(c) or 1.1502–22T(c) (or §§ 1.1502–21A(c) or 1.1502–22A(c), as appropriate), as the case may be.
1.1502–15(a)(3)	§ 1.1502–31A(b)(9)	§ 1.1502–31A(b)(9) (as contained in the 26 C.F.R. edition revised as of April 1, 1996).
1.1502–18(f)(1)(ii), (1)(iii), (2)(i), (2)(ii), and (4) Example (i) and (ii).	§ 1.1502–39A	§ 1.1502–39A (as contained in the 26 C.F.R. edition revised as of April 1, 1996).
1.1502–18(f)(5)	§ 1.1502–31A(b)(1)	§ 1.1502–31A(b)(1) (as contained in the 26 C.F.R. edition revised as of April 1, 1996).
1.1502–20(a)(1)	1.1502–15(b)	1.1502–11(c).
1.1502–20(c)(4), Example 7(iii)	§ 1.1502–21	§§ 1.1502–21A or 1.1502–21T.
1.1502–20(g)(3), Example 1(i)	§ 1.1502–21	§§ 1.1502–21A or 1.1502–21T.
1.1502–20(g)(3), Example 2(i)	§ 1.1502–21	§§ 1.1502–21A or 1.1502–21T.
1.1502–21(b)(1)	Paragraph (a) of § 1.1502–79	§§ 1.1502–79A(a).
1.1502–21(b)(1)	§ 1.1502–15	§ 1.1502–15A (or § 1.1502–11(c), as appropriate).
1.1502–21(b)(2)(i)	Paragraph (a)(4) of § 1.1502–79	This paragraph.
1.1502–21(e)(1)(i)	Paragraph (a)(3) of § 1.1502–79	This paragraph.
1.1502–22(a)(1)(ii)	§ 1.1502–23	§§ 1.1502–23A or 1.1502–23T.
1.1502–22(a)(3)	§ 1.1502–15	§§ 1.1502–15A and 1.1502–11(c).
1.1502–22(b)(1)	Paragraph (b) of § 1.1502–79	§ 1.1502–79A(b) (or § 1.1502–22T(b), as appropriate).
1.1502–23	§§ 1.1502–21(c) and 1.1502–22(c), as provided in § 1.1502–15(a).	§§ 1.1502–21A(c) and 1.1502–22A(c), as provided in § 1.1502–15A(a) (or §§ 1.1502–21T(c) and 1.1502–22T(c), as provided in § 1.1502–15T(a), as appropriate).
1.1502–26(a)(1)(ii) concluding text	Paragraph (f) of § 1.1502–21	§§ 1.1502–21T(e) or 1.1502–21A(f), as appropriate.
1.1502–32(b)(5) Example 2(b)	1.1502–79	1.1502–21T(b).
1.1502–41(a)	Paragraph (a)(1) of § 1.1502–22	§ 1.1502–22A(a).
1.1502–41(a)	§ 1.1502–23	§ 1.1502–23A.
1.1502–41(b)	Paragraph (a)(1) of § 1.1502–22	§ 1.1502–22A(a).
1.1502–41(b)	Paragraph (b) of § 1.1502–22	§ 1.1502–22A(b).

Affected section	Remove	Add
1.1502–42(f)(4)(i)(A)	§ 1.1502–79(a)(3).	§ 1.1502–21T(b) (or § 1.1502–79A(a)(3), as appropriate).
1.1502–42(j) Example 4(b)	§ 1.1502–79(a)(3).	§ 1.1502–79A(a)(3).
1.1502–42(j) Example 4(c)	§ 1.1502–21(b)(3)	§ 1.1502–21A(b)(3).
1.1502–42(j) Example 4(c)	§ 1.1502–79(a)(3)	§ 1.1502–79A(a)(3).
1.1502–43(b)(2)(iv)	§ 1.1502–21(a)	§§ 1.1502–21T(a) or 1.1502–21A(a), as appropriate.
1.1502–43(b)(2)(v)	§ 1.1502–22(a)	§§ 1.1502–22T(a) or 1.1502–22A(a), as appropriate.
1.1502–43(b)(2)(vi)	§ 1.1502–41(a)	§§ 1.1502–22T(a) or 1.1502–41A, as appropriate.
1.1502–43(b)(2)(vi)	§ 1.1502–41(b)	§§ 1.1502–22T(a) or 1.1502–41A, as appropriate.
1.1502–43(b)(2)(vii)	§ 1.1502–22(b)	§§ 1.1502–22T(b) or 1.1502–22A(b), as appropriate.
1.1502–43(b)(2)(viii)	Section 1.1502–15 (built-in deductions) does	Sections 1.1502–15A (Limitations on built-in deductions not subject to § 1.1502–15T) and 1.1502–15T (SRLY limitation on built-in losses (temporary)) do.
1.1502–44(b)(2)	§ 1.1502–21	§§ 1.1502–21T or 1.1502–21A (as appropriate).
1.1502–44(b)(3)	§ 1.1502–22	§§ 1.1502–22T or 1.1502–22A (as appropriate).
1.1502–47(h)(2)(i)	§ 1.1502–21	§§ 1.1502–21T or 1.1502–21A (as appropriate).
1.1502–47(h)(2)(ii)	§ 1.1502–21(f)	§§ 1.1502–21(A)(f) or 1.1502–21T(e) (as appropriate).
1.1502–47(h)(2)(iii)	§ 1.1502–21	§§ 1.1502–21A or 1.1502–21T (as appropriate).
1.1502–47(h)(2)(iv)	§ 1.1502–21	§§ 1.1502–21A or 1.1502–21T (as appropriate).
1.1502–47(h)(2)(vii) Example	§§ 1.1502–21 and 1.1502–79	§§ 1.1502–21A and 1.1502–79A.
1.1502–47(h)(3)(iii)	§ 1.1502–21(c)	§§ 1.1502–21A(c) or 1.1502–21T(c) (as appropriate).
1.1502–47(h)(3)(iv) and (v)	§ 1.1502–21(d)	§ 1.1502–21A(d).
1.1502–47(h)(4)(i), first sentence	§ 1.1502–22	§§ 1.1502–22T or 1.1502–22A (as appropriate).
1.1502–47(h)(4)(i), second sentence	§ 1.1502–22(a)	§§ 1.1502–22T or 1.1502–22A(a) (as appropriate).
1.1502–47(h)(4)(ii), first sentence	§ 1.1502–22	§§ 1.1502–22A or 1.1502–22T.
1.1502–47(h)(4)(ii), first sentence	§ 1.1502–21	§§ 1.1502–21T or 1.1502–21A (as appropriate).
1.1502–47(h)(4)(ii), second sentence	''§ 1.1502–22(d)''	''§ 1.1502–22A(d)''.
1.1502–47(h)(4)(ii), second sentence	''§ 1.1502–21(d)''	''§ 1.1502–21A(d)''.
1.1502–47(h)(4)(iii)	§ 1.1502–22(b)(1)	§§ 1.1502–22A(b)(1) or 1.1502–22T(b).
1.1502–47(k)(5)	§ 1.1502–22	§§ 1.1502–22T or 1.1502–22A (as appropriate).
1.1502–47(l)(3)(i)	§ 1.1502–21	§§ 1.1502–21T or 1.1502–21A (as appropriate).
1.1502–47(m)(2)(ii)	§ 1.1502–21	§§ 1.1502–21T or 1.1502–21A (as appropriate).
1.1502–47(m)(2)(ii)	§ 1.1502–22	§§ 1.1502–22T or 1.1502–22A (as appropriate).
1.1502–47(m)(3)(i)	§§ 1.1502–21 and 1.1502–22	§§ 1.1502–21T and 1.1502–22T (or §§ 1.1502–21A and 1.1502–22A, as appropriate).
1.1502–47(m)(3)(vi)(A), both instances	§ 1.1502–79(a)(3)	§§ 1.1502–21T(b) or 1.1502–79A(a)(3) (as appropriate).
1.1502–47(m)(3)(vii)	§ 1.1502–21(b)(3)(ii)	§ 1.1502–21A(b)(3)(ii).
1.1502–47(m)(3)(ix)	§ 1.1502–15 (including the exceptions in paragraph (a)(4) thereof).	§§ 1.1502–15T and 1.1502–15A (including applicable exceptions thereto).
1.1502–47(m)(5) Example 4	§ 1.1502–15	§ 1.1502–15A.
1.1502–47(o)(2)(i)	§ 1.1502–41	§§ 1.1502–41A or 1.1502–22T (as appropriate).
1.1502–47(o)(2)(ii)	§ 1.1502–41	§§ 1.1502–41A or 1.1502–22T (as appropriate).
1.1502–47(q)	§ 1.1502–21(b)(3) and § 1.1502–79(a)(3)	§§ 1.1502–21A(b)(3) and 1.1502–79A(a)(3) (or § 1.1502–21T, as appropriate).
1.1502–78(a)	§ 1.1502–79 (a), (b), or (c)	§§ 1.1502–21T(b), 1.1502–22T(b), or 1.1502–79(c) (or §§ 1.1502–79A(a), 1.1502–79A(b), or 1.1502–79(c), as appropriate).
1.1502–79(a)(1)(i)	§ 1.1502–21	§ 1.1502–21A.
1.1502–79(b)(1)	1.1502–22	1.1502–22A.

Affected section	Remove	Add
1.1502–79(c)(1)	Paragraph (a)(1) and (2) of this section	§ 1.1502–21T(b) (or §§ 1.1502–79A(a)(1) and (2), as appropriate).
1.1502–79(d)(1)	Paragraph (a)(1) and (2) of this section	§ 1.1502–21T(b) (or §§ 1.1502–79A(a)(1) and (2), as appropriate).
1.1502–79(e)(1)	Paragraph (a)(1) and (2) of this section	§ 1.1502–21T(b) (or §§ 1.1502–79A(a)(1) and (2), as appropriate).
1.1502–80(c)	§ 1.1502–15(b)	§ 1.1502–11(c).
1.1502–100(c)(2)	§ 1.1502–21	§§ 1.1502–21A or 1.1502–21T (as appropriate).
1.1503–2(d)(2)(i)	§ 1.1502–21(c)	§§ 1.1502–21A(c) or 1.1502–21T(c), as appropriate.
1.1503–2(d)(2)(ii)	§ 1.1502–21(c)	§§ 1.1502–21A(c) or 1.1502–21T(c), as appropriate.
1.1503–2(d)(4) Example 1(iv)	1.1502–22	1.1502–22T(c).
1.1503–2(d)(4) Example 2(iv)	§ 1.1502–21(c)	§ 1.1502–21A(c).
1.1503–2(g)(2)(vii)(B)(1)	§ 1.1502–21(c)	§§ 1.1502–21A(c) or 1.1502–21T(c) (as appropriate).
1.1503–2(g)(2)(vii)(B)(2)	§ 1.1502–21(c)	§§ 1.1502–21A(c) or 1.1502–21T(c) (as appropriate).
1.1503–2(g)(2)(vii)(E)	§ 1.1502–21(c)	§§ 1.1502–21A(c) or 1.1502–21T(c) (as appropriate).
1.1503–2(g)(2)(vii)(G) Example 1	§ 1.1502–21(c)	§§ 1.1502–21A(c) or 1.1502–21T(c), as appropriate.
1.1503–2(g)(2)(vii)(G) Example 2	§ 1.1502–21(c)	§§ 1.1502–21A(c) or 1.1502–21T(c), as appropriate.
1.1503–2(h)(3)	§ 1.1502–21(c)	§§ 1.1502–21A(c) or 1.1502–21T(c) (as appropriate).
1.1503–2A(f)(1)(i) intro text	§ 1.1502–79(a)(3)	§ 1.1502–21T(b).
1.1503–2A(f)(1)(i)(C)	§ 1.1502–79	§ 1.1502–22T(b).
1.1503–2A(f)(2)(i)	§ 1.1502–21(c)(2)	§§ 1.1502–21A(c)(2) or 1.1502–21T(c) (as appropriate).
1.1503–2A(f)(2)(ii)	§ 1.1502–21(c)(2)	§§ 1.1502–21A(c)(2) or 1.1502–21T(c) (as appropriate).
1.1503–2A(f)(4) Example 2(iv), first sentence	§ 1.1502–21(c)(2)	§ 1.1502–21A(c)(2).
1.1503–2A(f)(4) Example 2(iv), second sentence.	§ 1.1502–21(c)	§ 1.1502–21A(c).
1.1552–1(a)(3)(i)	§ 1.1502–30A	§ 1.1502–30A (as contained in the 26 C.F.R. edition revised as of April 1, 1996).
1.1552–1(b)(1)	§ 1.1502–30A	§ 1.1502–30A (as contained in the 26 C.F.R. edition revised as of April 1, 1996).
301.6402–7(g)(2)(iii)	§ 1.1502–21(b)	§§ 1.1502–21T(b) or 1.1502–21A(b) (as appropriate).
301.6402–7(g)(3) Example 2, second sentence	§ 1.1502–21	§ 1.1502–21T.
301.6402–7(g)(3) Example 2, third sentence	§ 1.1502–21(c)	§ 1.1502–21T(c).
301.6402–7(h)(1)(ii) Example (B)	1.1502–21(b)	1.1502–21T(b).
301.6402–7(h)(1)(ii) Example (B)	1.1502–22(b)	1.1502–22T(b).

§ 1.1501–1 [Removed]

Par. 3. Section 1.1501–1 is removed.

Par. 4. The undesignated centerheading immediately following § 1.1504–4 is revised from ''Regulations Applicable to Taxable Years Prior to January 1, 1966'' to ''Regulations Applicable to Taxable Years Before January 1, 1997''.

§§ 1.1502–0A through 1.1502–3A, 1.1502–10A through 1.1502–19A and 1.1502–30A through 1.1502–51A [Removed]

Par. 5. Sections 1.1502–0A through 1.1502–3A, 1.1502–10A through 1.1502–19A, and 1.1502–30A through 1.1502–51A are removed.

Par. 6. Section 1.1502–0 is revised to read as follows:

§ 1.1502–0 Effective dates.

(a) The regulations under section 1502 are applicable to taxable years beginning after December 31, 1965, except as otherwise provided therein.

(b) The provisions of §§ 1.1502–0A through 1.1502–3A, 1.1502–10A through 1.1502–19A, and 1.1502–30A through 1.1502–51A (as contained in the 26 CFR part 1 edition revised April 1, 1996) are applicable to taxable years beginning before January 1, 1966.

Par. 7. Section 1.1502–1 is amended by revising paragraphs (b), (f)(1), and (f)(2) introductory text, adding paragraphs (f)(4) and (j), and adding and reserving paragraph (i) to read as follows:

§ 1.1502–1 Definitions.

* * * * *

(b) *Member.* The term *member* means a corporation (including the common parent) that is included in the group, or as the context may require, a corporation that is included in a subgroup.

* * * * *

(f) *Separate return limitation year*—(1) *In general.* Except as provided in paragraphs (f)(2) and (3) of this section, the term *separate return limitation year* (or *SRLY*) means any separate return year of a member or of a predecessor of a member.

(2) *Exceptions.* The term *separate return limitation year* (or *SRLY*) does not include:

* * * * *

(4) *Predecessors and successors.* The term *predecessor* means a transferor or distributor of assets to a member (the *successor*) in a transaction—

(i) To which section 381(a) applies; or

(ii) That occurs on or after January 1, 1997, in which the successor's basis for the assets is determined, directly or

indirectly, in whole or in part, by reference to the basis of the assets of the transferor or distributor, but only if the amount by which basis differs from value, in the aggregate, is material. In the case of such a transaction, only one member may be considered a predecessor to or a successor of one other member.

* * * * *

(i) [Reserved]

(j) *Affiliated*. Corporations are affiliated if they are members of a group with each other.

Par. 8. In § 1.1502–2, paragraph (h) is revised to read as follows:

§ 1.1502–2 Computation of tax liability.

* * * * *

(h) The tax imposed by section 1201, instead of the taxes computed under paragraphs (a) and (g) of this section, computed by reference to the net capital gain of the group (see § 1.1502–22T) (or, for consolidated return years to which § 1.1502–22T does not apply, computed by reference to the excess of the consolidated net long-term capital gain over the consolidated net short-term capital loss (see § 1.1502–41A for the determination of the consolidated net long-term capital gain and the consolidated net short-term capital loss));

* * * * *

§ 1.1502–15 [Amended]

Par. 9. In § 1.1502–15, paragraph (b) is redesignated as paragraph (c) of § 1.1502–11, and the heading of newly designated § 1.1502–11, paragraph (c) is revised to read as follows:

§ 1.1502–11 Consolidated taxable income.

* * * * *

(c) *Disallowance of loss attributable to pre-1966 distributions*. * * *

§ 1.1502–15 [Redesignated as § 1.1502–15A]

Par. 10. Section 1.1502–15 is redesignated as § 1.1502–15A; the section heading of the newly designated § 1.1502–15A is revised; and paragraph (b) is added to read as follows:

§ 1.1502–15A Limitations on the allowance of built-in deductions for consolidated return years beginning before January 1, 1997.

* * * * *

(b) *Effective date*. This section applies to any consolidated return years to which § 1.1502–21T does not apply. See § 1.1502–21T(g) for effective dates of that section.

Par. 11. Section 1.1502–15T is added to read as follows:

§ 1.1502–15T SRLY limitation on built-in losses (temporary).

(a) *SRLY limitation*. Built-in losses are subject to the SRLY limitation under §§ 1.1502–21T(c) and 1.1502–22T(c) (including applicable subgroup principles). Built-in losses are treated as deductions or losses in the year recognized, except for the purpose of determining the amount of, and the extent to which the built-in loss is limited by, the SRLY limitation for the year in which it is recognized. Solely for such purpose, a built-in loss is treated as a hypothetical net operating loss carryover or net capital loss carryover arising in a SRLY, instead of as a deduction or loss in the year recognized. To the extent that a built-in loss is allowed as a deduction under this section in the year it is recognized, it offsets any consolidated taxable income for the year before any loss carryovers or carrybacks are allowed as a deduction. To the extent not so allowed, it is treated as a separate net operating loss or net capital loss carryover or carryback arising in the year of recognition and, under § 1.1502–21T(c) or § 1.1502–22T(c), the year of recognition is treated as a SRLY.

(b) *Built-in losses*—(1) *Defined*. If a corporation has a net unrealized built-in loss under section 382(h)(3) (as modified by this section) on the day it becomes a member of the group (whether or not the group is a consolidated group), its deductions and losses are built-in losses under this section to the extent they are treated as recognized built-in losses under section 382(h)(2)(B) (as modified by this section). This paragraph (b) generally applies separately with respect to each member, but see paragraph (c) of this section for circumstances in which it is applied on a subgroup basis.

(2) *Operating rules*. Solely for purposes of applying paragraph (b)(1) of this section, the principles of § 1.1502–94T(c) apply with appropriate adjustments, including the following:

(i) *Ownership change*. A corporation is treated as having an ownership change under section 382(g) on the day the corporation becomes a member of a group, and no other events (e.g., a subsequent ownership change under section 382(g) while it is a member) are treated as causing an ownership change. In the case of an asset acquisition by a group, the assets and liabilities acquired directly from the same transferor pursuant to the same plan are treated as the assets and liabilities of a corporation that becomes a member of the group (and has an ownership change) on the date of the acquisition.

(ii) *Recognized built-in gain or loss*. A loss that is included in the determination of net unrealized built-in gain or loss and that is recognized but disallowed or deferred (e.g., under § 1.1502–20 or section 267) is not treated as a built-in loss unless and until the loss would be allowed during the recognition period without regard to the application of this section. Section 382(h)(1)(B)(ii) does not apply to the extent it limits the amount of recognized built-in loss that may be treated as a pre-change loss to the amount of the net unrealized built-in loss.

(c) *Built-in losses of subgroups*—(1) *In general*. In the case of a subgroup, the principles of paragraph (b) of this section apply to the subgroup, and not separately to its members. Thus, the net unrealized built-in loss and recognized built-in loss for purposes of paragraph (b) of this section are based on the aggregate amounts for each member of the subgroup.

(2) *Members of subgroups*. A subgroup is composed of those members that have been continuously affiliated with each other for the 60 consecutive month period ending immediately before they become members of the group in which the loss is recognized. A member remains a member of the subgroup until it ceases to be affiliated with the loss member. For this purpose, the principles of § 1.1502–21T(c)(2) (iv) through (vi) apply with appropriate adjustments.

(3) *Built-in amounts*. Solely for purposes of determining whether the subgroup has a net unrealized built-in loss or whether it has a recognized built-in loss, the principles of §§ 1.1502–91T (g) and (h) apply with appropriate adjustments.

(d) *Examples*. For purposes of the examples in this section, unless otherwise stated, all groups file consolidated returns, all corporations have calendar taxable years, the facts set forth the only corporate activity, value means fair market value and the adjusted basis of each asset equals its value, all transactions are with unrelated persons, and the application of any limitation or threshold under section 382 is disregarded. The principles of this section are illustrated by the following examples:

Example 1. Determination of recognized built-in loss. (a) P buys all the stock of T during Year 1 for $100, and T becomes a member of the P group. T has three depreciable assets. Asset 1 has an unrealized loss of $20 (basis $45, value $25), asset 2 has an unrealized loss of $25 (basis $50, value $25), and asset 3 has an unrealized gain of $25 (basis $25, value $50).

(b) Under paragraph (b)(2)(i) of this section, T is treated as having an ownership change under section 382(g) on becoming a member of the P group. This treatment does not depend on whether P's acquisition of the T stock actually constitutes an ownership change under section 382(g), or whether T is subject to any limitation under section 382. Under paragraph (b)(1) of this section, none of T's $45 of unrealized loss is treated as a built-in loss unless T has a net unrealized built-in loss under section 382(h)(3) on becoming a member of the P group.

(c) Under section 382(h)(3)(A), T has a $20 net unrealized built-in loss on becoming a member of the P group (($20)+($25)+$25=($20)). Assume that this amount exceeds the threshold requirement in section 382(h)(3)(B). Under section 382(h)(2)(B), the entire amount of T's $45 unrealized loss is treated as a built-in loss to the extent it is recognized during the 5-year recognition period described in section 382(h)(7). Under paragraph (b)(2)(ii) of this section, the restriction under section 382(h)(1)(B)(ii), which limits the amount of recognized built-in loss that is treated as pre-change loss to the amount of the net unrealized built-in loss, is inapplicable for this purpose. Consequently, the entire $45 of unrealized loss (not just the $20 net unrealized loss) is treated under paragraph (b)(1) of this section as a built-in loss to the extent it is recognized within 5 years of T's becoming a member of the P group. Under paragraph (a) of this section, a built-in loss is subject to the SRLY limitation under § 1.1502–21T(c)(1).

(d) Under paragraph (b)(2)(i) of this section, the results would be the same if T transferred all of its assets and liabilities to a subsidiary of the P group in a single transaction described in section 351.

Example 2. Actual application of section 382 not relevant. (a) The facts are the same as in *Example 1*, except that P buys 55 percent of the stock of T during Year 1, resulting in an ownership change of T under section 382(g). During Year 2, P buys the 45 percent balance of the T stock, and T becomes a member of the P group.

(b) Although T has an ownership change for purposes of section 382 in Year 1 and not Year 2, T's joining the P group in Year 2 is treated as an ownership change under section 382(g) for purposes of this section. Consequently, for purposes of this section, whether T has a net unrealized built-in loss under section 382(h)(3) is determined as if the day T joined the P group were a change date. Thus, the results are the same as in *Example 1*.

Example 3. Determination of a recognized built-in loss of a subgroup. (a) During Year 1, P buys all of the stock of S for $100, and S becomes a member of the P group. M is the common parent of another group. At the beginning of Year 7, M acquires all of the stock of P, and P and S become members of the M group. At the time of M's acquisition of the P stock, P has (disregarding the stock of S) a $10 net unrealized built-in gain (two depreciable assets, asset 1 with a basis of $35 and a value of $55, and asset 2 with a basis of $55 and a value of $45), and S has a $75 net unrealized built-in loss (two depreciable assets, asset 3 with a basis of $95 and a value of $10, and asset 4 with a basis of $10 and a value of $20).

(b) Under paragraph (c) of this section, P and S compose a subgroup on becoming members of the M group because P and S were continuously affiliated for the 60 month period ending immediately before they became members of the M group. Consequently, paragraph (b) of this section does not apply to P and S separately. Instead, their separately computed unrealized gains and losses are aggregated for purposes of determining whether and the extent to which any unrealized loss is treated as built-in loss under this section and is subject to the SRLY limitation under § 1.1502–21T(c).

(c) Under paragraph (c) of this section, the P subgroup has a net unrealized built-in loss on the day P and S become members of the M group determined by treating the day they become members as a change date. The net unrealized built-in loss is the aggregate of P's net unrealized built-in gain of $10 and S's net unrealized built-in loss of $75, or an aggregate net unrealized built-in loss of $65. (The stock of S owned by P is disregarded for purposes of determining the net unrealized built-in loss. However, any loss allowed on the sale of the stock within the recognition period is taken into account in determining recognized built-in loss.) Assume that the $65 net unrealized built-in loss exceeds the threshold requirement under section 382(h)(3)(B).

(d) Under paragraphs (b)(1), (b)(2)(ii), and (c) of this section, a loss recognized during the 5-year recognition period on an asset of P or S held on the day that P and S became members of the M group is a built-in loss except to the extent the group establishes that such loss exceeds the amount by which the adjusted basis of such asset on the day the member became a member exceeded the fair market value of such asset on that same day. If P sells asset 2 for $45 in Year 7 and recognizes a $10 loss, the entire $10 loss is treated as a built-in loss under paragraphs (b)(2)(ii) and (c) of this section. If S sells asset 3 for $10 in Year 7 and recognizes an $85 loss, the entire $85 loss is treated as a built-in loss under paragraphs (b)(2)(ii) and (c) of this section (not just the $55 balance of the P subgroup's $65 net unrealized built-in loss).

(e) The determination of whether P and S constitute a SRLY subgroup for purposes of loss carryovers and carrybacks, and the extent to which built-in losses are not allowed under the SRLY limitation, is made under § 1.1502–21T(c).

Example 4. Computation of SRLY limitation. (a) During Year 1, individual A forms T by contributing $300 and T sustains a $100 net operating loss. During Year 2, T's assets decline in value to $100. At the beginning of Year 3, P buys all the stock of T for $100, and T becomes a member of the P group with a net unrealized built-in loss of $100. Assume that $100 exceeds the threshold requirements of section 382(h)(3)(B). During Year 3, T recognizes its unrealized built-in loss as a $100 ordinary loss. The members of the P group contribute the following net income to the consolidated taxable income of the P group (disregarding T's recognized built-in loss and any consolidated net operating loss deduction under § 1.1502–21T) for Years 3 and 4:

	Year 3	Year 4	Total
P group (without T)	$100	$100	$200
T	60	40	100
CTI	160	140	300

(b) Under paragraph (b) of this section, T's $100 ordinary loss in Year 3 (not taken into account in the consolidated taxable income computations above) is a built-in loss. Under paragraph (a) of this section, the built-in loss is treated as a net operating loss carryover for purposes of determining the SRLY limitation under § 1.1502–21T(c).

(c) For Year 3, § 1.1502–21T(c) limits T's $100 built-in loss and $100 net operating loss carryover from Year 1 to the aggregate of the P group's consolidated taxable income through Year 3 determined by reference to only T's items. For this purpose, consolidated taxable income is determined without regard to any consolidated net operating loss deductions under § 1.1502–21T(a).

(d) The P group's consolidated taxable income through Year 3 is $60 when determined by reference to only T's items. Under § 1.1502–21T(c), the SRLY limitation for Year 3 is therefore $60.

(e) Under paragraph (a) of this section, the $100 built-in loss is treated as a current deduction for all purposes other than determination of the SRLY limitation under § 1.1502–21T(c). Consequently, a deduction for the built-in loss is allowed in Year 3 before T's loss carryover from Year 1 is allowed, but only to the extent of the $60 SRLY limitation. None of T's Year 1 loss carryover is allowed because the built-in loss ($100) exceeds the SRLY limitation for Year 3.

(f) The $40 balance of the built-in loss that is not allowed in Year 3 because of the SRLY limitation is treated as a $40 net operating loss arising in Year 3 that is carried to other years in accordance with the rules of § 1.1502–21T(b). The $40 net operating loss is treated under paragraph (a) of this section and § 1.1502–21T(c)(1)(ii) as a loss carryover or carryback from Year 3 that arises in a SRLY, and is subject to the rules of § 1.1502–21T (including § 1.1502–21T(c)) rather than this section.

(g) The facts are the same as in paragraphs (a) through (f) of this *Example 4*, except that T also recognizes additional built-in losses in Year 4. For purposes of determining the SRLY limitation for these additional losses in Year 4 (or any subsequent year), the $60 of built-in loss allowed as a deduction in Year 3 is treated under paragraph (a) of this section as a deduction in Year 3 that reduces the P group's consolidated taxable income when determined by reference to only T's items.

Example 5. Built-in loss exceeding consolidated taxable income in the year recognized. (a) P buys all the stock of T during Year 1, and T becomes a member of the P group. At the time of acquisition, T has

a depreciable asset with an unrealized loss of $45 (basis $100, value $55), which exceeds the threshold requirements of section 382(h)(3)(B). During Year 2, T sells its asset for $55 and recognizes the unrealized built-in loss. The P group has $10 of consolidated taxable income in Year 2, computed by disregarding T's recognition of the $45 built-in loss and the consolidated net operating loss deduction, while the consolidated taxable income would be $25 if determined by reference to only T's items (other than the $45 loss).

(b) T's $45 loss is recognized in Year 2 and, under paragraph (b) of this section, constitutes a built-in loss. Under paragraph (a) of this section and § 1.1502–21T(c)(1)(ii), the loss is treated as a net operating loss carryover to Year 2 for purposes of applying the SRLY limitation under § 1.1502–21T(c).

(c) For Year 2, T's SRLY limitation is the aggregate of the P group's consolidated taxable income through Year 2 determined by reference to only T's items. For this purpose, consolidated taxable income is determined by disregarding any built-in loss that is treated as a net operating loss carryover, and any consolidated net operating loss deductions under § 1.1502–21T(a). Consolidated taxable income so determined is $25.

(d) Under § 1.1502–21T(c), $25 of the $45 built-in loss could be deducted in Year 2. Because the P group has only $10 of consolidated taxable income (determined without regard to the $45), the $25 loss creates a consolidated net operating loss of $15. This loss is carried back or over under the rules of § 1.1502–21T(b) and absorbed under the rules of § 1.1502–21T(a). This loss is not treated as arising in a SRLY (see § 1.1502–21T(c)(1)(ii)) and therefore is not subject to the SRLY limitation under § 1.1502–21T(c) in any consolidated return year of the group to which it is carried. The remaining $20 is treated as a loss carryover arising in a SRLY and is subject to the limitation of § 1.1502–21T(c) in the year to which it is carried.

(e) *Predecessors and successors*. For purposes of this section, any reference to a corporation or member includes, as the context may require, a reference to a successor or predecessor, as defined in § 1.1502–1(f)(4).

(f) *Effective date*—(1) *In general*. This section applies to built-in losses recognized in consolidated return years beginning on or after January 1, 1997.

(2) *Application to prior periods*. See § 1.1502–21T(g)(3) for rules generally permitting a group to apply the rules of this section to consolidated return years ending on or after January 29, 1991, and beginning before January 1, 1997. A group must treat all corporations that were affiliated on January 1, 1987, and continuously thereafter as having met the 60 consecutive month requirement of paragraph (c)(2) of this section on any day before January 1, 1992, on which the determination of net unrealized built-in gain or loss of a subgroup is made.

Par. 12. Section 1.1502–21 is redesignated as § 1.1502–21A; the heading of the newly designated § 1.1502–21A is revised; and paragraphs (d)(4), (e)(3) and (h) are added to read as follows:

§ 1.1502–21A Consolidated net operating loss deduction generally applicable for consolidated return years beginning before January 1, 1997.

* * * * *

(d) * * *

(4) *Cross-reference*. See § 1.1502–21T(d)(1) for the rule that applies the principles of this paragraph (d) in consolidated return years beginning on or after January 1, 1997, with respect to a consolidated return change of ownership occurring before January 1, 1997.

(e) * * *

(3) *Effective date*. This paragraph (e) disallows or reduces the net operating loss carryovers of a member as a result of a transaction to which old section 382 (as defined in § 1.382–2T(f)(21)) applies. See § 1.1502–21T(d)(2) for the rule that applies the principles of this paragraph (e) in consolidated return years beginning on or after January 1, 1997, with respect to such a transaction.

* * * * *

(h) *Effective date*. Except as provided in § 1.1502–21T (d)(1), (d)(2), and (g)(3), this section applies to consolidated return years beginning before January 1, 1997.

Par. 13. Section 1.1502–21T is added to read as follows:

§ 1.1502–21T Net operating losses (temporary).

(a) *Consolidated net operating loss deduction*. The consolidated net operating loss deduction (or CNOL deduction) for any consolidated return year is the aggregate of the net operating loss carryovers and carrybacks to the year. The net operating loss carryovers and carrybacks consist of—

(1) Any CNOLs (as defined in paragraph (e) of this section) of the consolidated group; and

(2) Any net operating losses of the members arising in separate return years.

(b) *Net operating loss carryovers and carrybacks to consolidated return and separate return years*. Net operating losses of members arising during a consolidated return year are taken into account in determining the group's CNOL under paragraph (e) of this section for that year. Losses taken into account in determining the CNOL may be carried to other taxable years (whether consolidated or separate) only under this paragraph (b).

(1) *Carryovers and carrybacks generally*. The net operating loss carryovers and carrybacks to a taxable year are determined under the principles of section 172 and this section. Thus, losses permitted to be absorbed in a consolidated return year generally are absorbed in the order of the taxable years in which they arose, and losses carried from taxable years ending on the same date, and which are available to offset consolidated taxable income for the year, generally are absorbed on a pro rata basis. See *Example 2* of paragraph (c)(1)(iii) of this section for an illustration of pro rata absorption of losses subject to a SRLY limitation. Additional rules provided under the Code or regulations also apply. See, e.g., section 382(l)(2)(B).

(2) *Carryovers and carrybacks of CNOLs to separate return years*—(i) *In general*. If any CNOL that is attributable to a member may be carried to a separate return year of the member, the amount of the CNOL that is attributable to the member is apportioned to the member (apportioned loss) and carried to the separate return year. If carried back to a separate return year, the apportioned loss may not be carried back to an equivalent, or earlier, consolidated return year of the group; if carried over to a separate return year, the apportioned loss may not be carried over to an equivalent, or later, consolidated return year of the group. For rules permitting the reattribution of losses of a subsidiary to the common parent when loss is disallowed on the disposition of subsidiary stock, see § 1.1502–20(g).

(ii) *Special rules*—(A) *Year of departure from group*. If a corporation ceases to be a member during a consolidated return year, net operating loss carryovers attributable to the corporation are first carried to the consolidated return year, and only the amount so attributable that is not absorbed by the group in that year is carried to the corporation's first separate return year.

(B) *Offspring rule*. In the case of a member that has been a member continuously since its organization, the CNOL attributable to the member is included in the carrybacks to consolidated return years before the member's existence. See paragraph (f) of this section for applications to predecessors and successors. If the group did not file a consolidated return for a carryback year, the loss may be carried back to a separate return year of the common parent under paragraph (b)(2)(i) of this section, but only if the common parent was not a member of a different consolidated group or of an

affiliated group filing separate returns for the year to which the loss is carried or any subsequent year in the carryback period. Following an acquisition described in § 1.1502–75(d) (2) or (3), references to the common parent are to the corporation that was the common parent immediately before the acquisition.

(iii) *Equivalent years.* Taxable years are equivalent if they bear the same numerical relationship to the consolidated return year in which a CNOL arises, counting forward or backward from the year of the loss. For example, in the case of a member's third taxable year (which was a separate return year) that preceded the consolidated return year in which the loss arose, the equivalent year is the third consolidated return year preceding the consolidated return year in which the loss arose. See paragraph (b)(3)(iii) of this section for certain short taxable years that are disregarded in making this determination.

(iv) *Amount of CNOL attributable to a member.* The amount of a CNOL that is attributable to a member is determined by a fraction the numerator of which is the separate net operating loss of the member for the year of the loss and the denominator of which is the sum of the separate net operating losses for that year of all members having such losses. For this purpose, the separate net operating loss of a member is determined by computing the CNOL by reference to only the member's items of income, gain, deduction, and loss, including the member's losses and deductions actually absorbed by the group in the taxable year (whether or not absorbed by the member).

(v) *Examples.* For purposes of the examples in this section, unless otherwise stated, all groups file consolidated returns, all corporations have calendar taxable years, the facts set forth the only corporate activity, value means fair market value and the adjusted basis of each asset equals its value, all transactions are with unrelated persons, and the application of any limitation or threshold under section 382 is disregarded. The principles of this paragraph (b)(2) are illustrated by the following examples:

Example 1. Offspring rule. (a) P is formed at the beginning of Year 1 and files a separate return. P forms S on March 15 of Year 2, and P and S file a consolidated return. P purchases all the stock of T at the beginning of Year 3, and T becomes a member of the P group. T was formed in Year 2 and filed a separate return for that year. P, S, and T sustain a $1,100 CNOL in Year 3 and, under paragraph (b)(2)(iv) of this section, the loss is attributable $200 to P, $300 to S, and $600 to T.

(b) Of the $1,100 CNOL in Year 3, the $500 amount of the CNOL that is attributable to P and S ($200 + $300) may be carried to P's separate return in Year 1. Even though S was not in existence in Year 1, the $300 amount of the CNOL attributable to S may be carried back to P's separate return in Year 1 because S (unlike T) has been a member of the P group since its organization and P is a qualified parent under paragraph (b)(2)(ii)(B) of this section. To the extent not absorbed in that year, the loss may then be carried to the P group's return in Year 2. The $600 amount of the CNOL attributable to T is a net operating loss carryback to T's separate return in Year 2.

Example 2. Departing members. (a) The facts are the same as in *Example 1.* In addition, on June 15 of Year 4, P sells all the stock of T. The P group's consolidated return for Year 4 includes the income of T through June 15. T files a separate return for the period from June 16 through December 31.

(b) $600 of the Year 3 CNOL attributable to T is apportioned to T and is carried back to its separate return in Year 2. To the extent the $600 is not absorbed in T's separate return in Year 2, it is carried to the consolidated return in Year 4 before being carried to T's separate return in Year 4. Any portion of the loss not absorbed in T's Year 2 or in the P group's Year 4 is then carried to T's separate return in Year 4.

(3) *Special rules*—(i) *Election to relinquish carryback.* A group may make an irrevocable election under section 172(b)(3) to relinquish the entire carryback period with respect to a CNOL for any consolidated return year. The election may not be made separately for any member (whether or not it remains a member), and must be made in a separate statement entitled ''THIS IS AN ELECTION UNDER SECTION 1.1502–21T(b)(3)(i) TO WAIVE THE ENTIRE CARRYBACK PERIOD PURSUANT TO SECTION 172(b)(3) FOR THE [insert consolidated return year] CNOLs OF THE CONSOLIDATED GROUP OF WHICH [insert name and employer identification number of common parent] IS THE COMMON PARENT.'' The statement must be signed by the common parent and filed with the group's income tax return for the consolidated return year in which the loss arises.

(ii) *Special election for groups that include insolvent financial institutions.* For rules applicable to relinquishing the entire carryback period with respect to losses attributable to insolvent financial institutions, see § 301.6402–7 of this chapter.

(iii) *Short years in connection with transactions to which section 381(a) applies.* If a member distributes or transfers assets to a corporation that is a member immediately after the distribution or transfer in a transaction to which section 381(a) applies, the transaction does not cause the distributor or transferor to have a short year within the consolidated return year of the group in which the transaction occurred that is counted as a separate year for purposes of determining the years to which a net operating loss may be carried.

(iv) *Special status losses.* [Reserved]

(c) *Limitations on net operating loss carryovers and carrybacks from separate return limitation years*—(1) *SRLY limitation*—(i) *General rule.* The aggregate of the net operating loss carryovers and carrybacks of a member arising (or treated as arising) in SRLYs that are included in the CNOL deductions for all consolidated return years of the group under paragraph (a) of this section may not exceed the aggregate consolidated taxable income for all consolidated return years of the group determined by reference to only the member's items of income, gain, deduction, and loss. For this purpose—

(A) Consolidated taxable income is computed without regard to CNOL deductions;

(B) Consolidated taxable income takes into account the member's losses and deductions (including capital losses) actually absorbed by the group in consolidated return years (whether or not absorbed by the member);

(C) In computing consolidated taxable income, the consolidated return years of the group include only those years, including the year to which the loss is carried, that the member has been continuously included in the group's consolidated return, but exclude:

(*1*) For carryovers, any years ending after the year to which the loss is carried; and

(*2*) For carrybacks, any years ending after the year in which the loss arose; and

(D) The treatment under § 1.1502–15T of a built-in loss as a hypothetical net operating loss carryover in the year recognized is solely for purposes of determining the limitation under this paragraph (c) with respect to the loss in that year and not for any other purpose. Thus, for purposes of determining consolidated taxable income for any other losses, a built-in loss allowed under this section in the year it arises is taken into account.

(ii) *Losses treated as arising in SRLYs.* If a net operating loss carryover or carryback did not arise in a SRLY but is attributable to a built-in loss (as defined under § 1.1502–15T), the carryover or carryback is treated for purposes of this paragraph (c) as arising in a SRLY if the built-in loss was not allowed, after application of the SRLY limitation, in the year it arose. For an

illustration, see § 1.1502–15T(d), *Example 5*.

(iii) *Examples*. The principles of this paragraph (c)(1) are illustrated by the following examples:

Example 1. Determination of SRLY limitation. (a) In Year 1, individual A forms T and T sustains a $100 net operating loss that is carried forward. P buys all the stock of T at the beginning of Year 2, and T becomes a member of the P group. The P group has $300 of consolidated taxable income in Year 2 (computed without regard to the CNOL deduction). Such consolidated taxable income would be $70 if determined by reference to only T's items.

(b) T's $100 net operating loss carryover from Year 1 arose in a SRLY. See § 1.1502–1(f)(2)(iii). Thus, the $100 net operating loss carryover is subject to the SRLY limitation in paragraph (c)(1) of this section. The SRLY limitation for Year 2 is consolidated taxable income determined by reference to only T's items, or $70. Thus, $70 of the loss is included under paragraph (a) of this section in the P group's CNOL deduction for Year 2.

(c) The facts are the same as in paragraph (a) of this *Example 1*, except that such consolidated taxable income (computed without regard to the CNOL deduction and by reference to only T's items) is a loss (a CNOL) of $370. Because the SRLY limitation may not exceed the consolidated taxable income determined by reference to only T's items, and such items aggregate to a CNOL, T's $100 net operating loss carryover from Year 1 is not allowed under the SRLY limitation in Year 2. Moreover, if consolidated taxable income (computed without regard to the CNOL deduction and by reference to only T's items) did not exceed $370 in Year 3, the carryover would still be restricted under § 1.1502–21T(c) in Year 3, because the aggregate consolidated taxable income for all consolidated return years of the group computed by reference to only T's items would not be a positive amount.

Example 2. Net operating loss carryovers. (a) In Year 1, individual A forms P and P sustains a $40 net operating loss that is carried forward. P has no income in Year 2. Unrelated corporation T sustains a net operating loss of $50 in Year 2 that is carried forward. P buys the stock of T during Year 3, but T is not a member of the P group for each day of the year. P and T file separate returns and sustain net operating losses of $120 and $60, respectively, for Year 3. The P group files consolidated returns beginning in Year 4. During Year 4, the P group has $160 of consolidated taxable income (computed without regard to the CNOL deduction). Such consolidated taxable income would be $70 if determined by reference to only T's items. These results are summarized as follows:

	Separate year 1	Separate year 2	Separate affiliated year 3	Consolidated year 4
P	$(40)	$0	$(120)	$90
T	0	(50)	(60)	70
CTI				160

(b) P's Year 1, Year 2, and Year 3 are not SRLYs with respect to the P group. See § 1.1502–1(f)(2)(i). Thus, P's $40 net operating loss arising in Year 1 and $120 net operating loss arising in Year 3 are not subject to the SRLY limitation under paragraph (c) of this section. Under the principles of section 172, paragraph (b) of this section requires that the loss arising in Year 1 be the first loss absorbed by the P group in Year 4. Absorption of this loss leaves $120 of the group's consolidated taxable income available for offset by other loss carryovers.

(c) T's Year 2 and Year 3 are SRLYs with respect to the P group. See § 1.1502–1(f)(2)(ii). Thus, T's $50 net operating loss arising in Year 2 and $60 net operating loss arising in Year 3 are subject to the SRLY limitation. Under paragraph (c)(1) of this section, the SRLY limitation for Year 4 is $70, and under paragraph (b) of this section, T's $50 loss from Year 2 must be included under paragraph (a) of this section in the P group's CNOL deduction for Year 4. The absorption of this loss leaves $70 of the group's consolidated taxable income available for offset by other loss carryovers.

(d) P and T each carry over net operating losses to Year 4 from a taxable year ending on the same date (Year 3). The losses carried over from Year 3 total $180. Under paragraph (b) of this section, the losses carried over from Year 3 are absorbed on a pro rata basis, even though one arises in a SRLY and the other does not. However, the group cannot absorb more than $20 of T's $60 net operating loss arising in Year 3 because its $70 SRLY limitation for Year 4 is reduced by T's $50 Year 2 SRLY loss already included in the CNOL deduction for Year 4. Thus, the absorption of Year 3 losses is as follows:

Amount of P's Year 3 losses absorbed = $120/($120 + $20) x $70 = $60.

Amount of T's Year 3 losses absorbed = § 20/($120 + $20) x $70 = $10.

(e) The absorption of $10 of T's Year 3 loss further reduces T's SRLY limitation to $10 ($70 of initial SRLY limitation, reduced by the $60 net operating loss already included in the CNOL deductions for Year 4 under paragraph (a) of this section).

(f) P carries its remaining $60 Year 3 net operating loss and T carries its remaining $50 Year 3 net operating loss over to Year 5. Assume that, in Year 5, the P group has $90 of consolidated taxable income (computed without regard to the CNOL deduction). The group's CTI determined by reference to only T's items is a CNOL of $4. For Year 5, the CNOL deduction includes $60 of P's Year 3 loss but only $6 of T's Year 3 loss (the aggregate consolidated taxable income for Years 4 and 5 determined by reference to T's items, or $66, reduced by T's SRLY losses actually absorbed by the group in Year 4, or $60).

Example 3. Net operating loss carrybacks. (a)(1) P owns all of the stock of S and T. The members of the P group contribute the following to the consolidated taxable income of the P group for Years 1, 2, and 3:

	Year 1	Year 2	Year 3	Total
P	$100	$60	$80	$240
S	20	20	30	70
T	30	10	(50)	(10)
CTI	150	90	60	300

(2) P sells all of the stock of T to individual A at the beginning of Year 4. For its Year 4 separate return year, T has a net operating loss of $30.

(b) T's Year 4 is a SRLY with respect to the P group. See § 1.1502–1(f)(1). T's $30 net operating loss carryback to the P group from Year 4 is not allowed under § 1.1502–21T(c) to be included in the CNOL deduction under paragraph (a) of this section for Year 1, 2, or 3, because the P group's consolidated taxable income would not be a positive amount if determined by reference to only T's items for all consolidated return years through Year 4 (without regard to the $30 net operating loss). However, the $30 loss is carried forward to T's Year 5 and succeeding taxable years as provided under the Code.

Example 4. Computation of SRLY limitation for built-in losses treated as net operating loss carryovers. (a) In Year 1, individual A forms T by contributing $300 and T sustains a $100 net operating loss. During Year 2, T's assets decline in value by

$100. At the beginning of Year 3, P buys all the stock of T for $100, and T becomes a member of the P group. At the time of the acquisition, T has a $100 net unrealized built-in loss, which exceeds the threshold requirements of section 382(h)(3)(B). During Year 3, T recognizes its unrealized loss as a $100 ordinary loss. The members of the P group contribute the following to the consolidated taxable income of the P group for Years 3 and 4 (computed without regard to T's recognition of its unrealized loss and any CNOL deduction under § 1.1502–21T):

	Year 3	Year 4	Total
P group (without T)	$100	$100	$200
T	60	40	100
CTI	160	140	300

(b) Under § 1.1502–15T(a), T's $100 of ordinary loss in Year 3 constitutes a built-in loss that is subject to the SRLY limitation under § 1.1502–21T(c). The amount of the limitation is determined by treating the deduction as a net operating loss carryover from a SRLY. The built-in loss is therefore subject to a $60 SRLY limitation for Year 3. The built-in loss is treated as a net operating loss carryover solely for purposes of determining the extent to which the loss is not allowed by reason of the SRLY limitation, and for all other purposes the loss remains a loss arising in Year 3. Consequently, under paragraph (b) of this section, the $60 allowed under the SRLY limitation is absorbed by the P group before T's $100 net operating loss carryover from Year 1 is allowed.

(c) Under § 1.1502–15T(a), the $40 balance of the built-in loss that is not allowed in Year 3 because of the SRLY limitation is treated as a $40 net operating loss arising in Year 3 that is subject to the SRLY limitation because, under § 1.1502–21T(c)(1)(ii), Year 3 is treated as a SRLY, and is carried to other years in accordance with the rules of paragraph (b) of this section. The SRLY limitation for Year 4 is the P group's consolidated taxable income for Year 3 and Year 4 determined by reference to only T's items and without regard to the group's CNOL deductions ($60+$40), reduced by T's loss actually absorbed by the group in Year 3 ($60). The SRLY limitation for Year 4 is $40.

(d) Under paragraph (c) of this section and the principles of section 172(b), $40 of T's $100 net operating loss carryover from Year 1 is included in the CNOL deduction under paragraph (a) of this section in Year 4.

(2) *SRLY subgroup limitation.* In the case of a net operating loss carryover or carryback for which there is a SRLY subgroup, the principles of paragraph (c)(1) of this section apply to the SRLY subgroup, and not separately to its members. Thus, the contribution to consolidated taxable income and the net operating loss carryovers and carrybacks arising (or treated as arising) in SRLYs that are included in the CNOL deductions for all consolidated return years of the group under paragraph (a) of this section are based on the aggregate amounts of income, gain, deduction, and loss of the members of the SRLY subgroup for the relevant consolidated return years (as provided in paragraph (c)(1)(i)(C) of this section). For an illustration of aggregate amounts during the relevant consolidated return years following the year in which a member of a SRLY subgroup ceases to be a member of the group, see paragraph (c)(2)(vii) *Example 4* of this section. A SRLY subgroup may exist only for a carryover or carryback arising in a year that is not a SRLY (and is not treated as a SRLY under paragraph (c)(1)(ii) of this section) with respect to another group (the former group), whether or not the group is a consolidated group. A separate SRLY subgroup is determined for each such carryover or carryback. A consolidated group may include more than one SRLY subgroup and a member may be a member of more than one SRLY subgroup. Solely for purposes of determining the members of a SRLY subgroup with respect to a loss:

(i) *Carryovers.* In the case of a carryover, the SRLY subgroup is composed of the member carrying over the loss (the loss member) and each other member that was a member of the former group that becomes a member of the group at the same time as the loss member. A member remains a member of the SRLY subgroup until it ceases to be affiliated with the loss member. The aggregate determination described in paragraph (c)(1) of this section and this paragraph (c)(2) includes the amounts of income, gain, deduction, and loss of each member of the SRLY subgroup for the consolidated return years during which it remains a member of the SRLY subgroup. For an illustration of the aggregate determination of a SRLY subgroup, see paragraph (c)(2)(vii) *Example 2* of this section.

(ii) *Carrybacks.* In the case of a carryback, the SRLY subgroup is composed of the member carrying back the loss (the loss member) and each other member of the group from which the loss is carried back that has been continuously affiliated with the loss member from the year to which the loss is carried through the year in which the loss arises.

(iii) *Built-in losses.* In the case of a built-in loss, the SRLY subgroup is composed of the member recognizing the loss (the loss member) and each other member that was part of the subgroup with respect to the loss determined under § 1.1502–15T(c)(2) immediately before the members became members of the group. The principles of paragraphs (c)(2)(i) and (ii) of this section apply to determine the SRLY subgroup for the built-in loss that is, under paragraph (c)(1)(ii) of this section, treated as arising in a SRLY with respect to the group in which the loss is recognized. For this purpose and as the context requires, a reference in those paragraphs to a group or former group is a reference to the subgroup determined under § 1.1502–15T(c)(2).

(iv) *Principal purpose of avoiding or increasing a SRLY limitation.* The members composing a SRLY subgroup are not treated as a SRLY subgroup if any of them is formed, acquired, or availed of with a principal purpose of avoiding the application of, or increasing any limitation under, this paragraph (c). Any member excluded from a SRLY subgroup, if excluded with a principal purpose of so avoiding or increasing any SRLY limitation, is treated as included in the SRLY subgroup.

(v) *Coordination with other limitations.* This paragraph (c)(2) does not allow a net operating loss to offset income to the extent inconsistent with other limitations or restrictions on the use of losses, such as a limitation based on the nature or activities of members. For example, any dual consolidated loss may not reduce the taxable income to an extent greater than that allowed under section 1503(d) and § 1.1503–2. See also § 1.1502–47(q) (relating to preemption of rules for life-nonlife groups).

(vi) *Anti-duplication.* If the same item of income or deduction could be taken into account more than once in determining a limitation under this paragraph (c), or in a manner inconsistent with any other provision of the Code or regulations incorporating this paragraph (c), the item of income or deduction is taken into account only once and in such manner that losses are absorbed in accordance with the ordering rules in paragraph (b) of this section and the underlying purposes of this section.

(vii) *Examples.* The principles of this paragraph (c)(2) are illustrated by the following examples:

Example 1. Members of SRLY subgroups. (a) During Year 1, P sustains a $50 net operating loss. At the beginning of Year 2, P buys all the stock of S at a time when the aggregate basis of S's assets exceeds their aggregate value by $70 (as determined under § 1.1502–15T). At the beginning of Year 3, P buys all the stock of T, T has a $60 net operating loss carryover at the time of the acquisition, and T becomes a member of the P group. During Year 4, S forms S1 and T forms T1, each by contributing assets with built-in gains which are, in the aggregate, material. S1 and T1 become members of the P group. M is the common parent of another group. During Year 7, M acquires all of the

stock of P, and the members of the P group become members of the M group for the balance of Year 7. The $50 and $60 loss carryovers of P and T are carried to Year 7 of the M group, and the value and basis of S's assets did not change after it became a member of the former P group.

(b) Under paragraph (c)(2) of this section, a separate SRLY subgroup is determined for each loss carryover and built-in loss. In the P group, P's $50 loss carryover is not treated as arising in a SRLY. See § 1.1502–1(f). Consequently, the carryover is not subject to limitation under paragraph (c) of this section in the P group.

(c) In the M group, P's $50 loss carryover is treated as arising in a SRLY and is subject to the limitation under paragraph (c) of this section. A SRLY subgroup with respect to that loss is composed of members which were members of the P group, the group as to which the loss was not a SRLY. The SRLY subgroup is composed of P, the member carrying over the loss, and each other member of the P group that became a member of the M group at the same time as P. A member of the SRLY subgroup remains a member until it ceases to be affiliated with P. For Year 7, the SRLY subgroup is composed of P, S, T, S1, and T1.

(d) In the P group, S's $70 unrealized loss, if recognized within the 5-year recognition period after S becomes a member of the P group, is subject to limitation under paragraph (c) of this section. See § 1.1502–15T and paragraph (c)(1)(ii) of this section. Because S was not continuously affiliated with P, T, or T1 for 60 consecutive months prior to joining the P group, these corporations cannot be included in a SRLY subgroup with respect to S's unrealized loss in the P group. See paragraph (c)(2)(iii) of this section. As a successor to S, S1 is included in a subgroup with S in the P group. Because S did not cease to exist, however, S1's contribution to consolidated taxable income may not be used to increase the consolidated taxable income of the P group that may be offset by the built-in loss. See paragraph (f) of this section.

(e) In the M group, S's $70 unrealized loss, if recognized within the 5-year recognition period after S becomes a member of the M group, is subject to limitation under paragraph (c) of this section. Prior to becoming a member of the M group, S had been continuously affiliated with P (but not T or T1) for 60 consecutive months and S1 is a successor that has remained continuously affiliated with S. Those members had a net unrealized built-in loss immediately before they became members of the group under § 1.1502–15T(c). Consequently, in Year 7, S, S1, and P compose a subgroup in the M group with respect to S's unrealized loss. S1's contribution to consolidated taxable income may not be used to increase the consolidated taxable income of the M group that may be offset by the recognized built-in loss. See paragraph (f) of this section.

(f) In the P group, T's $60 loss carryover arose in a SRLY and is subject to limitation under paragraph (c) of this section. P, S, and S1 were not members of the group in which T's loss arose and cannot be members of a SRLY subgroup with respect to the carryover in the P group. See paragraph (c)(2)(i) of this section. As a successor to T, T1 is included in a SRLY subgroup with T in the P group; however, because T did not cease to exist, T1's contribution to consolidated taxable income may not be used to increase the consolidated taxable income of the P group that may be offset by the carryover. See paragraph (f) of this section.

(g) In the M group, T's $60 loss carryover arose in a SRLY and is subject to limitation under paragraph (c) of this section. T and T1 remain the only members of a SRLY subgroup with respect to the carryover, but T1's contribution to consolidated taxable income may not be used to increase consolidated taxable income of the M group that may be offset by the carryover. See paragraph (f) of this section.

Example 2. Computation of SRLY subgroup limitation. (a) Individual A forms S. Individual B forms T. In Year 2, P buys all the stock of S and T from A and B, and S and T become members of the P group. For Year 3, the P group has a $45 CNOL, which is attributable to P, and which P carries forward. M is the common parent of another group. At the beginning of Year 4, M acquires all of the stock of P and the former members of the P group become members of the M group.

(b) P's year to which the loss is attributable, Year 3, is a SRLY with respect to the M group. See § 1.1502–1(f)(1). However, P, S, and T compose a SRLY subgroup with respect to the Year 3 loss under paragraph (c)(2)(i) of this section because Year 3 is not a SRLY (and is not treated as a SRLY) with respect to the P group. P's loss is carried over to the M group's Year 4 and is therefore subject to the SRLY subgroup limitation in paragraph (c)(2) of this section.

(c) In Year 4, the M group has $10 of consolidated taxable income (computed without regard to the CNOL deduction for Year 4). However, such consolidated taxable income would be $45 if determined by reference to only the items of P, S, and T, the members included in the SRLY subgroup with respect to P's loss carryover. Therefore, the SRLY subgroup limitation under paragraph (c)(2) of this section for P's net operating loss carryover from Year 3 is $45. Because the M group has only $10 of consolidated taxable income in Year 4, however, only $10 of P's net operating loss carryover is included in the CNOL deduction under paragraph (a) of this section in Year 4.

(d) In Year 5, the M group has $100 of consolidated taxable income (computed without regard to the CNOL deduction for Year 5). Neither P, S, nor T has any items of income, gain, deduction, or loss in Year 5. Although the members of the SRLY subgroup do not contribute to the $100 of consolidated taxable income in Year 5, the SRLY subgroup limitation for Year 5 is $35 (the sum of SRLY subgroup consolidated taxable income of $45 in Year 4 and $0 in Year 5, less the $10 net operating loss carryover actually absorbed by the M group in Year 4). Therefore, $35 of P's net operating loss carryover is included in the CNOL deduction under paragraph (a) of this section in Year 5.

Example 3. Inclusion in more than one SRLY subgroup. (a) At the beginning of Year 1, S buys all the stock of T, and T becomes a member of the S group. For Year 1, the S group has a CNOL of $10, all of which is attributable to S and is carried over to Year 2. At the beginning of Year 2, P buys all the stock of S, and S and T become members of the P group. For Year 2, the P group has a CNOL of $35, all of which is attributable to P and is carried over to Year 3. At the beginning of Year 3, M acquires all of the stock of P and the former members of the P group become members of the M group.

(b) P's and S's net operating losses arising in SRLYs with respect to the M group are subject to limitation under paragraph (c) of this section. P, S, and T compose a SRLY subgroup for purposes of determining the limitation for P's $35 net operating loss carryover arising in Year 2 because, under paragraph (c)(2)(i) of this section, Year 2 is not a SRLY with respect to the P group. Similarly, S and T compose a SRLY subgroup for purposes of determining the limitation for S's $10 net operating loss carryover arising in Year 1 because Year 1 is not a SRLY with respect to the S group.

(c) S and T are members of both the SRLY subgroup with respect to P's losses and the SRLY subgroup with respect to S's losses. Under paragraph (c)(2) of this section, S's and T's items cannot be included in the determination of the SRLY subgroup limitation for both SRLY subgroups for the same consolidated return year; paragraph (c)(2)(vi) of this section requires the M group to consider the items of S and T only once so that the losses are absorbed in the order of the taxable years in which they were sustained. Because S's loss was incurred in Year 1, while P's loss was incurred in Year 2, the items will be added in the determination of the consolidated taxable income of the S and T SRLY subgroup to enable S's loss to be absorbed first. The taxable income of the P, S, and T SRLY subgroup is then computed by including the consolidated taxable income for the S and T SRLY subgroup less the amount of any net operating loss carryover of S that is absorbed after applying this section to the S subgroup for the year.

Example 4. Corporation ceases to be affiliated with a SRLY subgroup. (a) P and S are members of the P group and the P group has a CNOL of $30 in Year 1, all of which is attributable to P and carried over to Year 2. At the beginning of Year 2, M acquires all of the stock of P, and P and S become members of the M group. P and S compose a SRLY subgroup with respect to P's net operating loss carryover. For Year 2, consolidated taxable income of the M group determined by reference to only the items of P (and without regard to the CNOL deduction for Year 2) is $40. However, such consolidated taxable income of the M group determined by reference to the items of both P and S is a loss of $20. Thus, the SRLY subgroup limitation under paragraph (c)(2) of this section prevents the M group from including any of P's net operating loss carryover in the CNOL deduction under paragraph (a) of this section in Year 2, and P carries the loss to Year 3.

(b) At the end of Year 2, P sells all of the S stock and S ceases to be a member of the M group and, in turn, ceases to be affiliated with the P subgroup. For Year 3, consolidated taxable income of the M group is $50 (determined without regard to the CNOL deduction for Year 3), and such consolidated taxable income would be $10 if determined by reference to only items of P. However, the limitation under paragraph (c) of this section for Year 3 for P's net operating loss carryover still prevents the M group from including any of P's loss in the CNOL deduction under paragraph (a) of this section. The limitation results from the inclusion of S's items for Year 2 in the determination of the SRLY subgroup limitation for Year 3 even though S ceased to be a member of the M group (and the P subgroup) at the end of Year 2. Thus, the M group's consolidated taxable income determined by reference to only the SRLY subgroup members' items for all consolidated return years of the group through Year 3 (determined without regard to the CNOL deduction) is not a positive amount.

(d) *Coordination with consolidated return change of ownership limitation and transactions subject to old section 382*—(1) *Consolidated return changes of ownership.* If a consolidated return change of ownership occurred before January 1, 1997, the principles of § 1.1502–21A(d) apply to determine the amount of the aggregate of the net operating losses attributable to old members of the group that may be included in the consolidated net operating loss deduction under paragraph (a) of this section. For this purpose, § 1.1502–1(g) is applied by treating that date as the end of the year of change.

(2) *Old section 382.* The principles of § 1.1502–21A(e) apply to disallow or reduce the amount of a net operating loss carryover of a member as a result of a transaction subject to old section 382.

(e) *Consolidated net operating loss.* Any excess of deductions over gross income, as determined under § 1.1502–11(a) (without regard to any consolidated net operating loss deduction), is also referred to as the consolidated net operating loss (or CNOL).

(f) *Predecessors and successors*—(1) *In general.* For purposes of this section, any reference to a corporation, member, common parent, or subsidiary, includes, as the context may require, a reference to a successor or predecessor, as defined in § 1.1502–1(f)(4).

(2) *Limitation on SRLY subgroups.* Except as the Commissioner may otherwise determine, any increase in the consolidated taxable income of a SRLY subgroup that is attributable to a successor is disregarded unless the successor acquires substantially all the assets and liabilities of its predecessor and the predecessor ceases to exist.

(g) *Effective date.*—(1) *In general.* This section generally applies to consolidated return years beginning on or after January 1, 1997.

(2) *SRLY limitation.* Except in the case of those members (including members of a SRLY subgroup) described in paragraph (g)(3)(iii) of this section, a group does not take into account a consolidated taxable year beginning before January 1, 1997, in determining the aggregate of the consolidated taxable income under paragraph (c)(1) of this section (including for purposes of § 1.1502–15T and § 1.1502–22T(c)) for the members (or SRLY subgroups).

(3) *Application to prior periods.* A consolidated group may apply the rules of this section to all consolidated return years ending on or after January 29, 1991, and beginning before January 1, 1997, provided that—

(i) The group's tax liability as shown on an original or an amended return is consistent with the application of the rules of this section (other than this paragraph (g)) and §§ 1.1502–15T, 1.1502–22T, 1.1502–23T, 1.1502–91T through 1.1502–96T, and 1.1502–98T for each such year for which the statute of limitations does not preclude the filing of an amended return on January 1, 1997;

(ii) Each section described in paragraph (g)(3)(i) of this section and § 1.1502–1(f)(4)(ii) is applied by substituting ''taxable years ending on or after January 29, 1991'' for ''taxable years beginning on or after January 1, 1997'' (and ''before January 29, 1991'' for ''before January 1, 1997'' in the case of consolidated return changes of ownership) as the context requires.

(iii) The rules of paragraph (c) of this section and §§ 1.1502–15T and 1.1502–22T(c) are applied only with respect to the losses and deductions of those corporations that became members of the group (including members of a subgroup), and to acquisitions occurring, on or after January 29, 1991, (and only with respect to such losses and deductions);

(iv) The rules of §§ 1.1502–15A, 1.1502–21A(c) and 1.1502–22A(c) are applied with respect to the losses and deductions of those corporations that became members of the group, and to acquisitions occurring, before January 29, 1991; and

(v) Appropriate adjustments are made in the earliest subsequent open year to reflect any inconsistency in a year for which the statute of limitations precludes the filing of an amended return on January 1, 1997.

(4) *Waiver of carrybacks.* Paragraph (b)(3)(i) of this section (relating to the waiver of carrybacks) applies to net operating losses arising in a consolidated return year for which the due date of the income tax return (without regard to extensions) is on or after August 26, 1996.

Par. 14. Section 1.1502–22 is redesignated as § 1.1502–22A; the heading of the newly designated § 1.1502–22A is revised; and paragraphs (d)(3) and (e) are added to read as follows:

§ 1.1502–22A Consolidated net capital gain or loss generally applicable for consolidated return years beginning before January 1, 1997.

* * * * *

(d) * * *

(3) *Cross-reference.* See § 1.1502–22T(d) for the rule that applies the principles of this paragraph (d) in consolidated return years beginning on or after January 1, 1997, with respect to a consolidated return change of ownership occurring before January 1, 1997.

(e) *Effective date.* This section applies to any consolidated return years to which § 1.1502–21T(g) does not apply. See § 1.1502–21T(g) for effective dates of that section.

Par. 15. Section 1.1502–22T is added to read as follows:

§ 1.1502–22T Consolidated capital gain and loss (temporary).

(a) *Capital gain.* The determinations under section 1222, including capital gain net income, net long-term capital gain, and net capital gain, with respect to members during consolidated return years are not made separately. Instead, consolidated amounts are determined for the group as a whole. The consolidated capital gain net income for any consolidated return year is determined by reference to—

(1) The aggregate gains and losses of members from sales or exchanges of capital assets for the year (other than gains and losses to which section 1231 applies);

(2) The consolidated net section 1231 gain for the year (determined under § 1.1502–23T); and

(3) The net capital loss carryovers or carrybacks to the year.

(b) *Net capital loss carryovers and carrybacks.*—(1) *In general.* The determinations under section 1222, including net capital loss and net short-term capital loss, with respect to members during consolidated return years are not made separately. Instead, consolidated amounts are determined for the group as a whole. Losses

included in the consolidated net capital loss may be carried to consolidated return years, and, after apportionment, may be carried to separate return years. The net capital loss carryovers and carrybacks consist of—

(i) Any consolidated net capital losses of the group; and

(ii) Any net capital losses of the members arising in separate return years.

(2) *Carryovers and carrybacks generally.* The net capital loss carryovers and carrybacks to a taxable year are determined under the principles of section 1212 and this section. Thus, losses permitted to be absorbed in a consolidated return year generally are absorbed in the order of the taxable years in which they were sustained, and losses carried from taxable years ending on the same date, and which are available to offset consolidated capital gain net income, generally are absorbed on a pro rata basis. Additional rules provided under the Code or regulations also apply, as well as the SRLY limitation under paragraph (c) of this section. See, e.g., section 382(l)(2)(B).

(3) *Carryovers and carrybacks of consolidated net capital losses to separate return years.* If any consolidated net capital loss that is attributable to a member may be carried to a separate return year under the principles of § 1.1502–21T(b)(2), the amount of the consolidated net capital loss that is attributable to the member is apportioned and carried to the separate return year (apportioned loss).

(4) *Special rules*—(i) *Short years in connection with transactions to which section 381(a) applies.* If a member distributes or transfers assets to a corporation that is a member immediately after the distribution or transfer in a transaction to which section 381(a) applies, the transaction does not cause the distributor or transferor to have a short year within the consolidated return year of the group in which the transaction occurred that is counted as a separate year for purposes of determining the years to which a net capital loss may be carried.

(ii) *Special status losses.* [Reserved]

(c) *Limitations on net capital loss carryovers and carrybacks from separate return limitation years.* The aggregate of the net capital losses of a member arising (or treated as arising) in SRLYs that are included in the determination of consolidated capital gain net income for all consolidated return years of the group under paragraph (a) of this section may not exceed the aggregate of the consolidated capital gain net income for all consolidated return years of the group determined by reference to only the member's items of gain and loss from capital assets as defined in section 1221 and trade or business assets defined in section 1231(b), including the member's losses actually absorbed by the group in the taxable year (whether or not absorbed by the member). The principles of § 1.1502–21T(c)(including the SRLY subgroup principles under § 1.1502–21T(c)(2)) apply with appropriate adjustments for purposes of applying this paragraph (c).

(d) *Coordination with respect to consolidated return change of ownership limitation occurring in consolidated return years beginning before January 1, 1997.* If a consolidated return change of ownership occurred before January 1, 1997, the principles of § 1.1502–22A(d) apply to determine the amount of the aggregate of the net capital loss attributable to old members of the group (as those terms are defined in § 1.1502–1(g)), that may be included in the net capital loss carryover under paragraph (b) of this section. For this purpose, § 1.1502–1(g) is applied by treating that date as the end of the year of change.

(e) *Consolidated net capital loss.* Any excess of losses over gains, as determined under paragraph (a) of this section (without regard to any carryovers or carrybacks), is also referred to as the consolidated net capital loss.

(f) *Predecessors and successors.* For purposes of this section, the principles of § 1.1502–21T(f) apply with appropriate adjustments.

(g) *Effective date*—(1) *In general.* This section applies to consolidated return years beginning on or after January 1, 1997.

(2) *Application to prior periods.* See § 1.1502–21T(g)(3) for rules generally permitting a group to apply the rules of this section to consolidated return years ending on or after January 29, 1991, and beginning before January 1, 1997.

Par. 16. Section 1.1502–23 is redesignated § 1.1502–23A; the section heading of the newly designated § 1.1502–23A is revised; the current text of the section is designated as paragraph (a), and paragraph (b) is added to read as follows:

§ 1.1502–23A Consolidated net section 1231 gain or loss generally applicable for consolidated return years beginning before January 1, 1997.

* * * * *

(b) *Effective date.* This section applies to any consolidated return years to which § 1.1502–21T(g) does not apply. See § 1.1502–21T(g) for effective dates of that section.

Par. 17. Section 1.1502–23T is added to read as follows:

§ 1.1502–23T Consolidated net section 1231 gain or loss (temporary).

(a) *In general.* Net section 1231 gains and losses of members arising during consolidated return years are not determined separately. Instead, the consolidated net section 1231 gain or loss is determined under this section for the group as a whole.

(b) *Recapture of ordinary loss.* [Reserved]

(c) *Effective date*—(1) *In general.* This section applies to gains and losses arising in the determination of consolidated net section 1231 gain or loss for taxable years beginning on or after January 1, 1997.

(2) *Application to prior periods.* See § 1.1502–21T(g)(3) for rules generally permitting a group to apply the rules of this section to consolidated return years ending on or after January 29, 1991, and beginning before January 1, 1997.

Par. 18. Section 1.1502–41 is redesignated as § 1.1502–41A; the section heading of the newly designated § 1.1502–41A is revised; and paragraph (c) is added to read as follows:

§ 1.1502–41A Determination of consolidated net long-term capital gain and consolidated net short-term capital loss generally applicable for consolidated return years beginning before January 1, 1997.

* * * * *

(c) *Effective date.* This section applies to any consolidated return years to which § 1.1502–21T(g) does not apply. See § 1.1502–21T(g) for effective dates of that section.

Par. 19. Section 1.1502–79A is added to read as follows:

§ 1.1502–79A Separate return years generally applicable for consolidated return years beginning before January 1, 1997.

(a) through (e) [Reserved]

(f) *Effective date.* Paragraphs (a) and (b) of this section apply to losses arising in consolidated return years to which § 1.1502–21T(g) does not apply. For this purpose net operating loss deductions, carryovers, and carrybacks arise in the year from which they are carried. See § 1.1502–21T(g) for effective dates of that section.

Par. 20. In § 1.1502–79, paragraphs (a) and (b) are redesignated as § 1.1502–79A, paragraphs (a) and (b).

Par. 21. Section 1.1502–79 is amended by adding new paragraphs (a) and (b) to read as follows:

§ 1.1502–79 Separate return years.

(a) *Carryover and carryback of consolidated net operating losses to separate return years.* For losses arising

in consolidated return years beginning before January 1, 1997, see § 1.1502–79A(a). For later years, see § 1.1502–21T(b).

(b) *Carryover and carryback of consolidated net capital loss to separate return years.* For losses arising in consolidated return years beginning before January 1, 1997, see § 1.1502–79A(b). For later years, see § 1.1502–22T(b).

* * * * *

PART 602—OMB CONTROL NUMBERS UNDER THE PAPERWORK REDUCTION ACT

Par. 22. The authority citation for part 602 continues to read in part as follows:

Authority: 26 U.S.C. 7805.

Par. 23. In § 602.101, paragraph (c) is amended by adding an entry in numerical order to the table to read as follows:

§ 602.101 OMB Control numbers.

* * * * *

(c) * * *

CFR part or section where identified or described	Current OMB control No.
* * *	* *
1.1502–21T	1545–1237
* * *	* *

Margaret Milner Richardson,
Commissioner of Internal Revenue.

Approved: May 31, 1996.

Leslie Samuels,
Assistant Secretary of the Treasury.

[FR Doc. 96–15823 Filed 6–26–96; 8:45 am]

BILLING CODE 4830–01–U

26 CFR Parts 1 and 602

[TD 8678]

RIN 1545–AU36

Regulations Under Section 1502 of the Internal Revenue Code of 1986; Limitations on Net Operating Loss Carryforwards and Certain Built-in Losses and Credits Following an Ownership Change of a Consolidated Group

AGENCY: Internal Revenue Service (IRS), Treasury.

ACTION: Temporary regulations.

SUMMARY: This document contains temporary regulations regarding the operation of sections 382 and 383 of the Internal Revenue Code of 1986 (relating to limitations on net operating loss carryforwards and certain built-in losses and credits following an ownership change) with respect to consolidated groups. The regulations include rules for determining whether a loss group or a loss subgroup has an ownership change, for computing a consolidated section 382 limitation or subgroup section 382 limitation, and for applying sections 382 and 383 to corporations that join or leave a group. The rules are necessary to provide guidance to such groups on the use of certain of their tax attributes. The text of these temporary regulations also serves as the text of the proposed regulations set forth in the notice of proposed rulemaking on this subject in the Proposed Rules section of this issue of the Federal Register.

DATES: These regulations are effective June 27, 1996.

For dates of application and special transition rules, see Effective Dates under **SUPPLEMENTARY INFORMATION.**

FOR FURTHER INFORMATION CONTACT: David B. Friedel at (202) 622–7550 (not a toll-free number).

SUPPLEMENTARY INFORMATION:

Paperwork Reduction Act

The collection of information contained in the temporary regulations has been reviewed and approved by the Office of Management and Budget in accordance with the Paperwork Reduction Act (44 U.S.C. 3507) under the control number 1545–1218. The collection requires a response from certain consolidated groups. The IRS requires the information described in § 1.1502–95T(e) to assure that a section 382 limitation is properly determined in cases of corporations that cease to be members of a group. Responses to this collection of information are required to obtain a benefit (relating to the section 382 limition applicable to the departing member(s)).

An agency may not conduct or sponsor, and a person is not required to respond to, a collection of information unless the collection of information displays a valid control number.

For further information concerning this collection of information, and where to submit comments on the collection of information and the accuracy of the estimated burden, and suggestions for reducing this burden, please refer to the preamble to the cross-referencing notice of proposed rulemaking published in the Proposed Rules section of this issue of the Federal Register.

Books or records relating to a collection of information must be retained as long as their contents may become material in the administration of any Internal Revenue law. Generally, tax returns and tax return information are confidential, as required by 26 U.S.C. 6103.

Background and Explanation of Provisions

On February 4, 1991, the IRS and Treasury issued three notices of proposed rulemaking, CO–132–87 (56 FR 4194), CO–077–90 (56 FR 4183), and CO–078–90 (56 FR 4228), setting forth rules regarding the application of sections 382 and 383 by consolidated groups and by controlled groups, and regarding the use of built-in deductions and net operating losses and capital losses, including the carryover and carryback of separate return limitation year (SRLY) losses of members of consolidated groups. The preambles to the three proposed regulations explain their rules in detail. The IRS and Treasury also published Notice 91–27 (1991–2 C.B. 629) to advise of intended modifications to the proposed regulations.

For reasons explained in the preamble to TD 8677 (published elsewhere in this issue of the Federal Register), the IRS and Treasury are issuing temporary amendments concerning the use of built-in deductions and net operating losses and capital losses of members of consolidated groups. Some of the rules in those temporary amendments are closely related to rules regarding the application of section 382 to members of consolidated groups (for example, rules relating to built-in deductions and subgroups). Because of the close relationship, and in order to give consolidated groups immediate guidance on the application of sections 382 and 383, the IRS and Treasury are issuing these temporary amendments. The temporary amendments are substantially identical to the rules proposed on January 29, 1991.

These temporary amendments do not address the comments on the proposed amendments. Many of these comments are still under consideration.

As a companion to this Treasury decision, the IRS and Treasury are also issuing temporary regulations relating to the application of sections 382 and 383 by members of controlled groups. See TD 8679 published elsewhere in this issue of the Federal Register.

Effective Dates

The temporary regulations are generally effective for testing dates that occur on or after January 1, 1997. Transition rules contained in the proposed amendments are retained and made applicable to testing dates before January 1, 1997.

Special Analysis

It has been determined that this Treasury decision is not a significant regulatory action as defined in EO 12866. Therefore, a regulatory assessment is not required. It is hereby certified that these regulations do not have a significant economic impact on a substantial number of small entities. This certification is based on the fact that these regulations will primarily affect affiliated groups of corporations that have elected to file consolidated returns, which tend to be larger businesses. Therefore, a Regulatory Flexibility Analysis under the Regulatory Flexibility Act (5 U.S.C. chapter 6) is not required. Pursuant to section 7805(f) of the Internal Revenue Code, the notice of proposed rulemaking preceding these regulations were sent to the Small Business Administration for comment on their impact on small business.

Drafting Information

The principal author of the temporary regulations is David B. Friedel of the Office of Assistant Chief Counsel (Corporate), IRS. Other personnel from the IRS and Treasury participated in their development.

List of Subjects

26 CFR Part 1

Income taxes, Reporting and recordkeeping requirements.

26 CFR Part 602

Reporting and recordkeeping requirements.

Adoption of Amendments to the Regulations

Accordingly, 26 CFR parts 1 and 602 are amended as follows:

PART 1—INCOME TAXES

Paragraph 1. The authority citation for part 1 is amended by adding entries in numerical order to read as follows:

Authority: 26 U.S.C. 7805 * * *

Section 1.1502–91T also issued under 26 U.S.C. 382(m) and 26 U.S.C. 1502.

Section 1.1502–92T also issued under 26 U.S.C. 382(m) and 26 U.S.C. 1502.

Section 1.1502–93T also issued under 26 U.S.C. 382(m) and 26 U.S.C. 1502.

Section 1.1502–94T also issued under 26 U.S.C. 382(m) and 26 U.S.C. 1502.

Section 1.1502–95T also issued under 26 U.S.C. 382(m) and 26 U.S.C. 1502.

Section 1.1502–96T also issued under 26 U.S.C. 382(m) and 26 U.S.C. 1502.

Section 1.1502–98T also issued under 26 U.S.C. 382(m) and 26 U.S.C. 1502.

Section 1.1502–99T also issued under 26 U.S.C. 382(m) and 26 U.S.C. 1502. * * *

Par. 2. Sections 1.1502–90T through 1.1502–99T are added to read as follows:

§ 1.1502–90T Table of contents (temporary).

The following table contains the major headings in §§ 1.1502–91T through 1.1502–99T.

§ 1.1502–91T Application of section 382 with respect to a consolidated group (temporary).

(a) Determination and effect of an ownership change.
(1) In general.
(2) Special rule for post-change year that includes the change date.
(3) Cross reference.
(b) Definitions and nomenclature.
(c) Loss group.
(1) Defined.
(2) Coordination with rule that ends separate tracking.
(3) Example.
(d) Loss subgroup.
(1) Net operating loss carryovers.
(2) Net unrealized built-in loss.
(3) Loss subgroup parent.
(4) Principal purpose of avoiding a limitation.
(5) Special rules.
(6) Examples.
(e) Pre-change consolidated attribute.
(1) Defined.
(2) Example.
(f) Pre-change subgroup attribute.
(1) Defined.
(2) Example.
(g) Net unrealized built-in gain and loss.
(1) In general.
(2) Members included.
(i) Consolidated group.
(ii) Loss subgroup.
(3) Acquisitions of built-in gain or loss assets.
(4) Indirect ownership.
(h) Recognized built-in gain or loss.
(1) In general. [Reserved]
(2) Disposition of stock or an intercompany obligation of a member.
(3) Deferred gain or loss.
(4) Exchanged basis property.
(i) [Reserved]
(j) Predecessor and successor corporations.

§ 1.1502–92T Ownership change of a loss group or a loss subgroup (temporary).

(a) Scope.
(b) Determination of an ownership change.
(1) Parent change method.
(i) Loss group.
(ii) Loss subgroup.
(2) Examples.
(3) Special adjustments.
(i) Common parent succeeded by a new common parent.
(ii) Newly created loss subgroup parent.
(iii) Examples.
(4) End of separate tracking of certain losses.
(c) Supplemental rules for determining ownership change.
(1) Scope.
(2) Cause for applying supplemental rule.
(3) Operating rules.
(4) Supplemental ownership change rules.
(i) Additional testing dates for the common parent (or loss subgroup parent).
(ii) Treatment of subsidiary stock as stock of the common parent (or loss subgroup parent).
(iii) 5-percent shareholder of the common parent (or loss subgroup parent).
(5) Examples.
(d) Testing period following ownership change under this section.
(e) Information statements.
(1) Common parent of a loss group.
(2) Abbreviated statement with respect to loss subgroups.

§ 1.1502–93T Consolidated section 382 limitation (or subgroup section 382 limitation) (temporary).

(a) Determination of the consolidated section 382 limitation (or subgroup section 382 limitation).
(1) In general.
(2) Coordination with apportionment rule.
(b) Value of the loss group (or loss subgroup).
(1) Stock value immediately before ownership change.
(2) Adjustment to value.
(3) Examples.
(c) Recognized built-in gain of a loss group or loss subgroup.
(d) Continuity of business.
(1) In general.
(2) Example.
(e) Limitations of losses under other rules.

§ 1.1502–94T Coordination with section 382 and the regulations thereunder when a corporation becomes a member of a consolidated group (temporary).

(a) Scope.
(1) In general.
(2) Successor corporation as new loss member.
(3) Coordination in the case of a loss subgroup.
(4) End of separate tracking of certain losses.
(5) Cross-reference.
(b) Application of section 382 to a new loss member.
(1) In general.
(2) Adjustment to value.
(3) Pre-change separate attribute defined.
(4) Examples.
(c) Built-in gains and losses.
(d) Information statements.

§ 1.1502–95T Rules on ceasing to be a member of a consolidated group (or loss subgroup) (temporary).

(a) In general.
(1) Consolidated group.
(2) Election by common parent.
(3) Coordination with §§ 1.1502–91T through 1.1502–93T.
(b) Separate application of section 382 when a member leaves a consolidated group.
(1) In general.
(2) Effect of a prior ownership change of the group.
(3) Application in the case of a loss subgroup.
(4) Examples.
(c) Apportionment of a consolidated section 382 limitation.
(1) In general.
(2) Amount of apportionment.
(3) Effect of apportionment on the consolidated section 382 limitation.
(4) Effect on corporations to which the consolidated section 382 limitation is apportioned.

(5) Deemed apportionment when loss group terminates.
(6) Appropriate adjustments when former member leaves during the year.
(7) Examples.
(d) Rules pertaining to ceasing to be a member of a loss subgroup.
(1) In general.
(2) Examples.
(e) Filing the election to apportion.
(1) Form of the election to apportion.
(2) Signing of the election.
(3) Filing of the election.
(4) Revocation of election.

§ 1.1502–96T Miscellaneous rules (temporary).

(a) End of separate tracking of losses.
(1) Application.
(2) Effect of end of separate tracking.
(3) Continuing effect of end of separate tracking.
(4) Special rule for testing period.
(5) Limits on effects of end of separate tracking.
(b) Ownership change of subsidiary.
(1) Ownership change of a subsidiary because of options or plan or arrangement.
(2) Effect of the ownership change.
(i) In general.
(ii) Pre-change losses.
(3) Coordination with §§ 1.1502–91T, 1.1502–92T, and 1.1502–94T.
(4) Example.
(c) Continuing effect of an ownership change.

§ 1.1502–97T Special rules under section 382 for members under the jurisdiction of a court in a title 11 or similar case (temporary). [Reserved]

§ 1.1502–98T Coordination with section 383 (temporary).

§ 1.1502–99T Effective dates (temporary).

(a) Effective date.
(b) Testing period may include a period beginning before January 1, 1997.
(c) Transition rules.
(1) Methods permitted.
(i) In general.
(ii) Adjustments to offset excess limitation.
(iii) Coordination with effective date.
(2) Permitted methods.
(d) Amended returns.
(e) Section 383.

§ 1.1502–91T Application of section 382 with respect to a consolidated group (temporary).

(a) *Determination and effect of an ownership change*—(1) *In general.* This section and §§ 1.1502–92T and 1.1502–93T set forth the rules for determining an ownership change under section 382 for members of consolidated groups and the section 382 limitations with respect to attributes described in paragraphs (e) and (f) of this section. These rules generally provide that an ownership change and the section 382 limitation are determined with respect to these attributes for the group (or loss subgroup) on a single entity basis and not for its members separately. Following an ownership change of a loss group (or a loss subgroup) under § 1.1502–92T, the amount of consolidated taxable income for any post-change year which may be offset by pre-change consolidated attributes (or pre-change subgroup attributes) shall not exceed the consolidated section 382 limitation (or subgroup section 382 limitation) for such year as determined under § 1.1502–93T.

(2) *Special rule for post-change year that includes the change date.* If the post-change year includes the change date, section 382(b)(3)(A) is applied so that the consolidated section 382 limitation (or subgroup section 382 limitation) does not apply to the portion of consolidated taxable income that is allocable to the period in the year on or before the change date. See generally § 1.382–6 (relating to the allocation of income and loss). The allocation of consolidated taxable income for the post-change year that includes the change date must be made before taking into account any consolidated net operating loss deduction (as defined in § 1.1502–21T(a)).

(3) *Cross reference.* See §§ 1.1502–94T and 1.1502–95T for rules that apply section 382 to a corporation that becomes or ceases to be a member of a group or loss subgroup.

(b) *Definitions and nomenclature.* For purposes of this section and §§ 1.1502–92T through 1.1502–99T, unless otherwise stated:

(1) The definitions and nomenclature contained in section 382 and the regulations thereunder (including the nomenclature and assumptions relating to the examples in § 1.382–2T(b)) and this section and §§ 1.1502–92T through 1.1502–99T apply; and

(2) In all examples, all groups file consolidated returns, all corporations file their income tax returns on a calendar year basis, the only 5-percent shareholder of a corporation is a public group, the facts set forth the only owner shifts during the testing period, and each asset of a corporation has a value equal to its adjusted basis.

(c) *Loss group*—(1) *Defined.* A loss group is a consolidated group that:

(i) Is entitled to use a net operating loss carryover to the taxable year that did not arise (and is not treated under § 1.1502–21T(c) as arising) in a SRLY;

(ii) Has a consolidated net operating loss for the taxable year in which a testing date of the common parent occurs (determined by treating the common parent as a loss corporation); or

(iii) Has a net unrealized built-in loss (determined under paragraph (g) of this section by treating the date on which the determination is made as though it were a change date).

(2) *Coordination with rule that ends separate tracking.* A consolidated group may be a loss group because a member's losses that arose in (or are treated as arising in) a SRLY are treated as described in paragraph (c)(1)(i) of this section. See § 1.1502–96T(a).

(3) *Example.* The following example illustrates the principles of this paragraph (c).

Example. Loss group. (a) L and L1 file separate returns and each has a net operating loss carryover arising in Year 1 that is carried over to Year 2. A owns 40 shares and L owns 60 shares of the 100 outstanding shares of L1 stock. At the close of Year 1, L buys the 40 shares of L1 stock from A. For Year 2, L and L1 file a consolidated return. The following is a graphic illustration of these facts:

BILLING CODE 4830–01–U

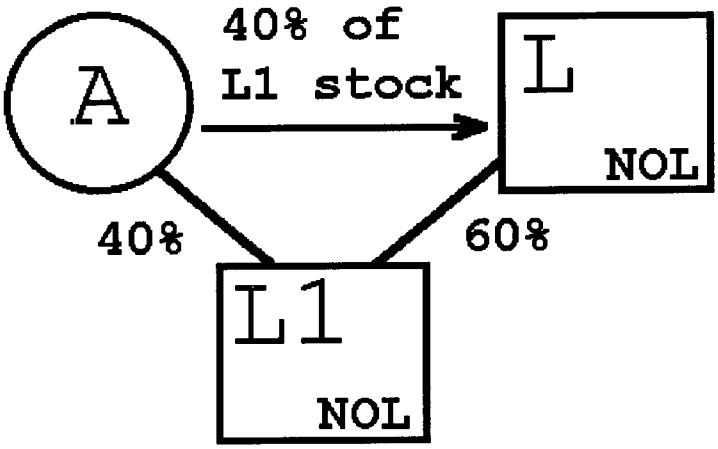

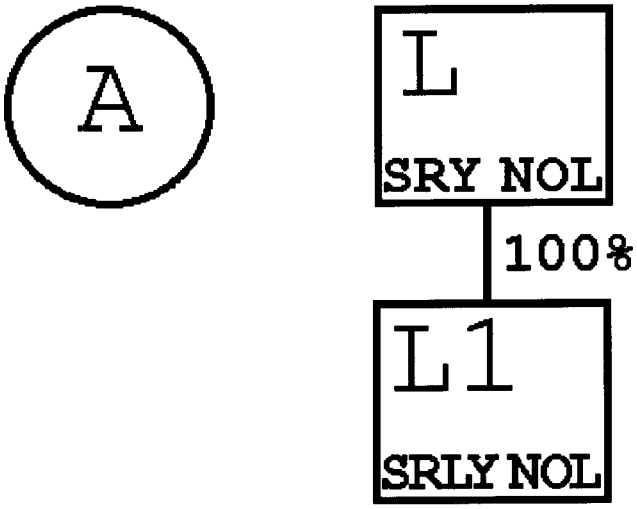

(b) L and L1 become a loss group at the beginning of Year 2 because the group is entitled to use the Year 1 net operating loss carryover of L, the common parent, which did not arise (and is not treated under § 1.1502–21T(c) as arising) in a SRLY. See § 1.1502–94T for rules relating to the application of section 382 with respect to L1's net operating loss carryover from Year 1 which did arise in a SRLY.

(d) *Loss subgroup*—(1) *Net operating loss carryovers.* Two or more corporations that become members of a consolidated group (the current group) compose a loss subgroup if:

(i) They were affiliated with each other in another group (the former group), whether or not the group was a consolidated group;

(ii) They bear the relationship described in section 1504(a)(1) to each other through a loss subgroup parent immediately after they become members of the current group; and

(iii) At least one of the members carries over a net operating loss that did not arise (and is not treated under § 1.1502–21T(c) as arising) in a SRLY with respect to the former group.

(2) *Net unrealized built-in loss.* Two or more corporations that become members of a consolidated group compose a loss subgroup if they:

(i) Have been continuously affiliated with each other for the 5 consecutive year period ending immediately before they become members of the group;

(ii) Bear the relationship described in section 1504(a)(1) to each other through a loss subgroup parent immediately after they become members of the current group; and

(iii) Have a net unrealized built-in loss (determined under paragraph (g) of this section on the day they become members of the group by treating that day as though it were a change date).

(3) *Loss subgroup parent.* A loss subgroup parent is the corporation that bears the same relationship to the other members of the loss subgroup as a common parent bears to the members of a group.

(4) *Principal purpose of avoiding a limitation.* The corporations described in paragraph (d)(1) or (2) of this section do not compose a loss subgroup if any one of them is formed, acquired, or availed of with a principal purpose of avoiding the application of, or increasing any limitation under, section 382. Instead, § 1.1502–94T applies with respect to the attributes of each such corporation. This paragraph (d)(4) does not apply solely because, in connection with becoming members of the group, the members of a group (or loss subgroup) are rearranged to bear a relationship to the other members described in section 1504(a)(1).

(5) *Special rules.* See § 1.1502–95T(d) for rules concerning when a corporation ceases to be a member of a loss subgroup. See also § 1.1502–96T(a) for a special rule regarding the end of separate tracking of SRLY losses of a member that has an ownership change or that has been a member of a group for at least 5 consecutive years.

(6) *Examples.* The following examples illustrate the principles of this paragraph (d).

Example 1. Loss subgroup. (a) P owns all the L stock and L owns all the L1 stock. The P group has a consolidated net operating loss arising in Year 1 that is carried to Year 2. On May 2, Year 2, P sells all the stock of L to A, and L and L1 thereafter file consolidated returns. A portion of the Year 1 consolidated net operating loss is apportioned under § 1.1502–21T(b) to each of L and L1, which they carry over to Year 2. The following is a graphic illustration of these facts:

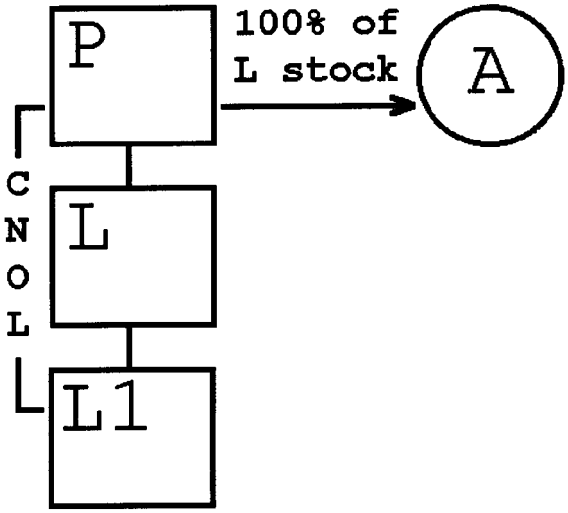

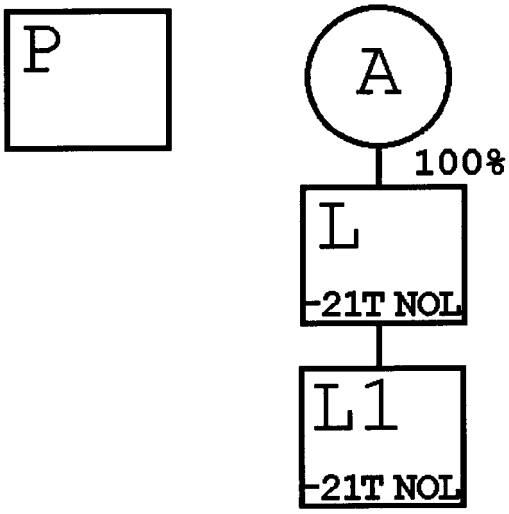

(b) (1) L and L1 compose a loss subgroup within the meaning of paragraph (d)(1) of this section because—

(i) They were affiliated with each other in the P group (the former group);

(ii) They bear a relationship described in section 1504(a)(1) to each other through a loss subgroup parent (L) immediately after they became members of the L group; and

(iii) At least one of the members (here, both L and L1) carries over a net operating loss to the L group (the current group) that did not arise in a SRLY with respect to the P group.

(2) Under paragraph (d)(3) of this section, L is the loss subgroup parent of the L loss subgroup.

Example 2. Loss subgroup—section 1504(a)(1) relationship. (a) P owns all the stock of L and L1. L owns all the stock of L2. L1 and L2 own 40 percent and 60 percent of the stock of L3, respectively. The P group has a consolidated net operating loss arising in Year 1 that is carried over to Year 2. On May 22, Year 2, P sells all the stock of L and L1 to P1, the common parent of another consolidated group. The Year 1 consolidated net operating loss is apportioned under § 1.1502–21T(b), and each of L, L1, L2, and L3 carries over a portion of such loss to the first consolidated return year of the P1 group ending after the acquisition. The following is a graphic illustration of these facts:

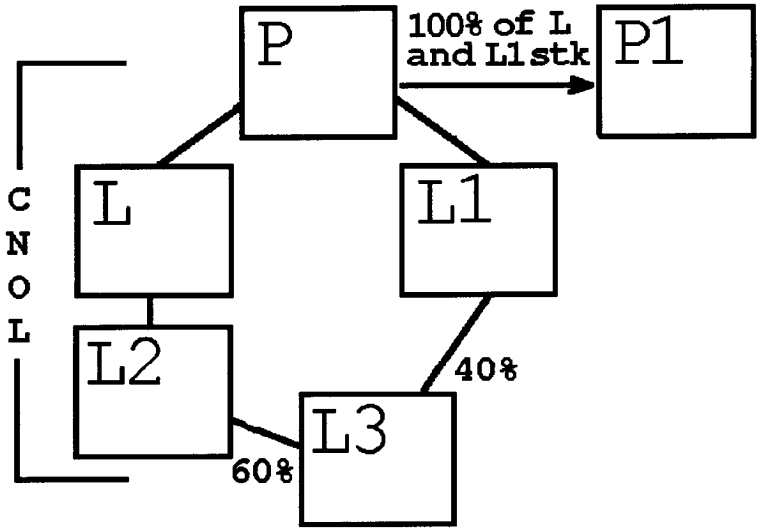

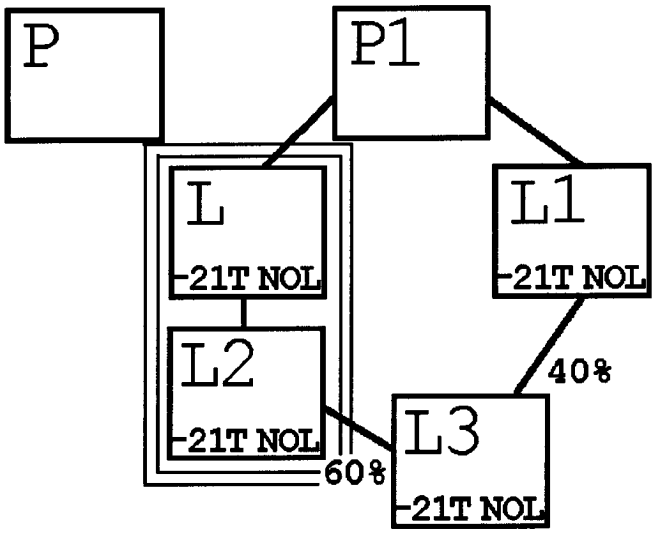

BILLING CODE 4830–01–C

(b) L and L2 compose a loss subgroup within the meaning of paragraph (d)(1) of this section. Neither L1 nor L3 is included in a loss subgroup because neither bears a relationship described in section 1504(a)(1) through a loss subgroup parent to any other member of the former group immediately after becoming members of the P1 group.

Example 3. Loss subgroup—section 1504(a)(1) relationship. The facts are the same as in *Example 2,* except that the stock of L1 is transferred to L in connection with the sale of the L stock to P1. L, L1, L2, and L3 compose a loss subgroup within the meaning of paragraph (d)(1) of this section because—

(1) They were affiliated with each other in the P group (the former group);

(2) They bear a relationship described in section 1504(a)(1) to each other through a loss subgroup parent (L) immediately after they become members of the P1 group; and

(3) At least one of the members (here, each of L, L1, L2, and L3) carries over to the P1 group (the current group) a net operating loss that did not arise in a SRLY with respect to the P group (the former group).

(e) *Pre-change consolidated attribute*—(1) *Defined.* A pre-change consolidated attribute of a loss group is—

(i) Any loss described in paragraph (c)(1) (i) or (ii) of this section (relating to the definition of loss group) that is allocable to the period ending on or before the change date; and

(ii) Any recognized built-in loss of the loss group.

(2) *Example.* The following example illustrates the principle of this paragraph (e).

Example. Pre-change consolidated attribute. (a) The L group has a consolidated net operating loss arising in Year 1 that is carried over to Year 2. The L loss group has an ownership change at the beginning of Year 2.

(b) The net operating loss carryover of the L loss group from Year 1 is a pre-change consolidated attribute because the L group was entitled to use the loss in Year 2, the loss did not arise in a SRLY with respect to the L group, and therefore the loss was described in paragraph (c)(1)(i) of this section. Under paragraph (a) of this section, the amount of consolidated taxable income of the L group for Year 2 that may be offset by this loss carryover may not exceed the consolidated section 382 limitation of the L group for that year. See § 1.1502–93T for rules relating to the computation of the consolidated section 382 limitation.

(f) *Pre-change subgroup attribute*—(1) *Defined.* A pre-change subgroup attribute of a loss subgroup is—

(i) Any net operating loss carryover described in paragraph (d)(1)(iii) of this section (relating to the definition of loss subgroup); and

(ii) Any recognized built-in loss of the loss subgroup.

(2) *Example.* The following example illustrates the principle of this paragraph (f).

Example. Pre-change subgroup attribute. (a) P is the common parent of a consolidated group. P owns all the stock of L, and L owns all the stock of L1. L2 is not a member of an affiliated group, and has a net operating loss arising in Year 1 that is carried over to Year 2. On December 11, Year 2, L1 acquires all the stock of L2, causing an ownership change of L2. During Year 2, the P group has a consolidated net operating loss that is carried over to Year 3. On November 2, Year 3, M acquires all the L stock from P. M, L, L1, and L2 thereafter file consolidated returns. All of the P group Year 2 consolidated net operating loss is apportioned under § 1.1502–21T(b) to L and L2, which they carry over to the M group.

(b)(1) L, L1, and L2 compose a loss subgroup because—

(i) They were affiliated with each other in the P group (the former group);

(ii) They bore a relationship described in section 1504(a)(1) to each other through a loss subgroup parent (L) immediately after they became members of the L group; and

(iii) At least one of the members (here, both L and L2) carries over a net operating loss to the M group (the current group) that is described in paragraph (d)(1)(iii) of this section.

(2) For this purpose, L2's loss from Year 1 that was a SRLY loss with respect to the P group (the former group) is treated as described in paragraph (d)(1)(iii) of this section because of the application of the principles of § 1.1502–96T(a). See paragraph (d)(5) of this section. M's acquisition results in an ownership change of L, and therefore the L loss subgroup under § 1.1502–92T(a)(2). See § 1.1502–93T for rules governing the computation of the subgroup section 382 limitation.

(c) In the M group, L2's Year 1 loss continues to be subject to a section 382 limitation resulting from the ownership change that occurred on December 11, Year 2. See § 1.1502–96T(c).

(g) *Net unrealized built-in gain and loss*—(1) *In general.* The determination whether a consolidated group (or loss subgroup) has a net unrealized built-in gain or loss under section 382(h)(3) is based on the aggregate amount of the separately computed net unrealized built-in gains or losses of each member that is included in the group (or loss subgroup) under paragraph (g)(2) of this section, including items of built-in income and deduction described in section 382(h)(6). Thus, for example, amounts deferred under section 267, or under § 1.1502–13 (other than amounts deferred with respect to the stock of a member (or an intercompany obligation) included in the group (or loss subgroup) under paragraph (g)(2) of this section) are built-in items. The threshold requirement under section 382(h)(3)(B) applies on an aggregate basis and not on a member-by-member basis. The separately computed amount of a member included in a group or loss subgroup does not include any unrealized built-in gain or loss on stock (including stock described in section 1504(a)(4) and § 1.382–2T(f)(18)(ii) and (iii)) of another member included in the group or loss subgroup (or on an intercompany obligation). However, a member of a group or loss subgroup includes in its separately computed amount the unrealized built-in gain or loss on stock of another member (or on an intercompany obligation) not included in the group or loss subgroup. If a member is not included in a group (or loss subgroup) under paragraph (g)(2) of this section, the determination of whether the member has a net unrealized built-in gain or loss under section 382(h)(3) is made on a separate entity basis. See § 1.1502–94(c) (relating to built-in gain or loss of a new loss member) and § 1.1502–96(a) (relating to the end of separate tracking of certain losses).

(2) *Members included*—(i) *Consolidated group.* The members included in the determination whether a consolidated group has a net unrealized built-in gain or loss are all members of the group on the day that the determination is made other than—

(A) A new loss member with a net unrealized built-in loss described in § 1.1502–94T(a)(1)(ii); and

(B) Members included in a loss subgroup described in § 1.1502–91T(d)(2).

(ii) *Loss subgroup.* The members included in the determination whether a loss subgroup has a net unrealized built-in gain or loss are those members described in paragraphs (d)(2)(i) and (ii) of this section.

(3) *Acquisitions of built-in gain or loss assets.* A member of a consolidated group (or loss subgroup) may not, in determining its separately computed net unrealized built-in gain or loss, include any gain or loss with respect to assets acquired with a principal purpose to affect the amount of its net unrealized built-in gain or loss. A group (or loss subgroup) may not, in determining its net unrealized built-in gain or loss, include any gain or loss of a member acquired with a principal purpose to affect the amount of its net unrealized built-in gain or loss.

(4) *Indirect ownership.* A member's separately computed net unrealized built-in gain or loss is adjusted to the extent necessary to prevent any duplication of unrealized gain or loss attributable to the member's indirect ownership interest in another member through a nonmember if the member has a 5-percent or greater ownership interest in the nonmember.

(h) *Recognized built-in gain or loss*—(1) *In general.* [Reserved]

(2) *Disposition of stock or an intercompany obligation of a member.* Gain or loss recognized by a member on the disposition of stock (including stock described in section 1504(a)(4) and § 1.382–2T(f)(18)(ii) and (iii)) of another member or an intercompany obligation is treated as a recognized built-in gain or loss under section 382(h)(2) (unless disallowed under § 1.1502–20 or otherwise), even though gain or loss on such stock or obligation was not included in the determination of a net unrealized built-in gain or loss under paragraph (g)(1) of this section.

(3) *Deferred gain or loss.* Gain or loss that is deferred under provisions such as section 267 and § 1.1502–13 is treated as recognized built-in gain or loss only to the extent taken into account by the group during the recognition period.

(4) *Exchanged basis property.* If the adjusted basis of any asset is determined, directly or indirectly, in whole or in part, by reference to the adjusted basis of another asset held by the member at the beginning of the recognition period, the asset is treated, with appropriate adjustments, as held by the member at the beginning of the recognition period.

(i) [Reserved]

(j) Predecessor and successor corporations. A reference in this section and §§ 1.1502–92T through 1.1502–99T to a corporation, member, common parent, loss subgroup parent, or subsidiary includes, as the context may require, a reference to a predecessor or successor corporation. For example, the determination whether a successor satisfies the continuous affiliation requirement of paragraph (d)(2)(i) of this section is made by reference to its predecessor.

§ 1.1502–92T Ownership change of a loss group or a loss subgroup (temporary).

(a) *Scope.* This section provides rules for determining if there is an ownership change for purposes of section 382 with respect to a loss group or a loss subgroup. See § 1.1502–94T for special rules for determining if there is an ownership change with respect to a new loss member and § 1.1502–96T(b) for special rules for determining if there is an ownership change of a subsidiary.

(b) *Determination of an ownership change*—(1) *Parent change method*—(i)

Loss group. A loss group has an ownership change if the loss group's common parent has an ownership change under section 382 and the regulations thereunder. Solely for purposes of determining whether the common parent has an ownership change—

(A) The losses described in § 1.1502–91T(c) are treated as net operating losses (or a net unrealized built-in loss) of the common parent; and

(B) The common parent determines the earliest day that its testing period can begin by reference to only the attributes that make the group a loss group under § 1.1502–91T(c).

(ii) *Loss subgroup.* A loss subgroup has an ownership change if the loss subgroup parent has an ownership change under section 382 and the regulations thereunder. The principles of § 1.1502–95T(b) (relating to ceasing to be a member of a consolidated group) apply in determining whether the loss subgroup parent has an ownership change. Solely for purposes of determining whether the loss subgroup parent has an ownership change—

(A) The losses described in § 1.1502–91T(d) are treated as net operating losses (or a net unrealized built-in loss) of the loss subgroup parent;

(B) The day that the members of the loss subgroup become members of the group (or a loss subgroup) is treated as a testing date within the meaning of § 1.382–2(a)(4); and

(C) The loss subgroup parent determines the earliest day that its testing period can begin under § 1.382–2T(d)(3) by reference to only the attributes that make the members a loss subgroup under § 1.1502–91T(d).

(2) *Examples.* The following examples illustrate the principles of this paragraph (b).

Example 1. Loss group—ownership change of the common parent. (a) A owns all the L stock. L owns 80 percent and B owns 20 percent of the L1 stock. For Year 1, the L group has a consolidated net operating loss that resulted from the operations of L1 and that is carried over to Year 2. The value of the L stock is $1000. The total value of the L1 stock is $600 and the value of the L1 stock held by B is $120. The L group is a loss group under § 1.1502–91T(c)(1) because it is entitled to use its net operating loss carryover from Year 1. On August 15, Year 2, A sells 51 percent of the L stock to C. The following is a graphic illustration of these facts:

BILLING CODE 4830–01–U

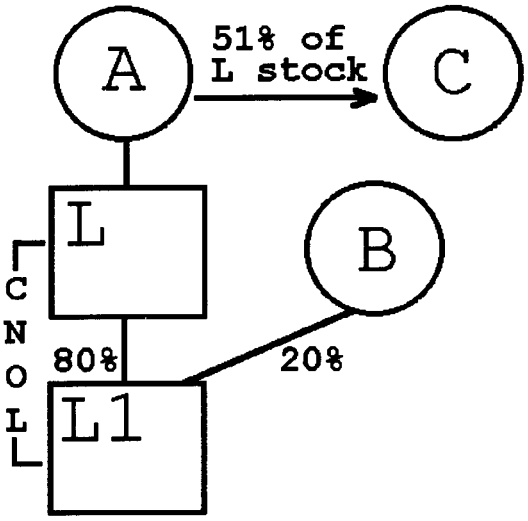

(b) Under paragraph (b)(1)(i) of this section, section 382 and the regulations thereunder are applied to L to determine whether it (and therefore the L loss group) has an ownership change with respect to its net operating loss carryover from Year 1 attributable to L1 on August 15, Year 2. The sale of the L stock to C causes an ownership change of L under § 1.382–2T and of the L loss group under paragraph (b)(1)(i) of this section. The amount of consolidated taxable income of the L loss group for any post-change taxable year that may be offset by its pre-change consolidated attributes (that is, the net operating loss carryover from Year 1 attributable to L1) may not exceed the consolidated section 382 limitation for the L loss group for the taxable year.

Example 2. Loss group—owner shifts of subsidiaries disregarded. (a) The facts are the same as in *Example 1,* except that on August 15, Year 2, A sells only 49 percent of the L stock to C and, on December 12, Year 3, in an unrelated transaction, B sells the 20 percent of the L1 stock to D. A's sale of the L stock to C does not cause an ownership change of L under § 1.382–2T nor of the L loss group under paragraph (b)(1)(i) of this section. The following is a graphic illustration of these facts:

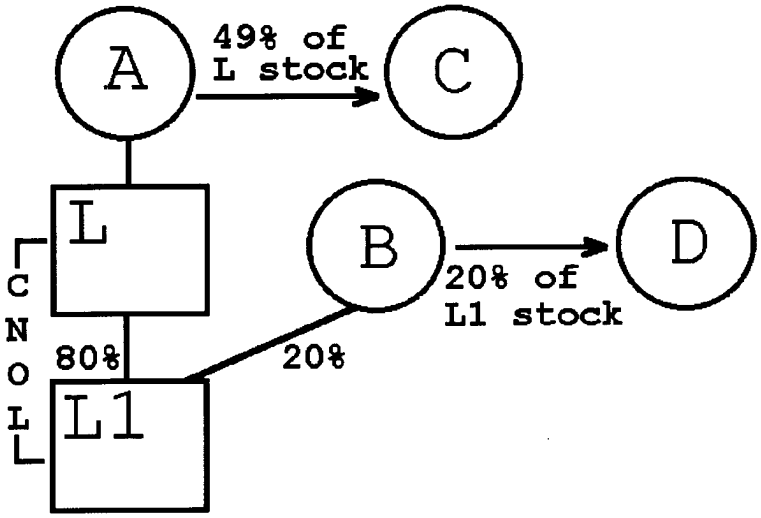

(b) B's subsequent sale of L1 stock is not taken into account for purposes of determining whether the L loss group has an ownership change under paragraph (b)(1)(i) of this section, and, accordingly, there is no ownership change of the L loss group. See paragraph (c) of this section, however, for a supplemental ownership change method that would apply to cause an ownership change if the purchases by C and D were pursuant to a plan or arrangement.

Example 3. Loss subgroup—ownership change of loss subgroup parent controls. (a) P owns all the L stock. L owns 80 percent and A owns 20 percent of the L1 stock. The P group has a consolidated net operating loss arising in Year 1 that is carried over to Year 2. On September 9, Year 2, P sells 51 percent of the L stock to B, and L1 is apportioned a portion of the Year 1 consolidated net operating loss under § 1.1502–21T(b), which it carries over to its next taxable year. L and L1 file a consolidated return for their first taxable year ending after the sale to B. The following is a graphic illustration of these facts:

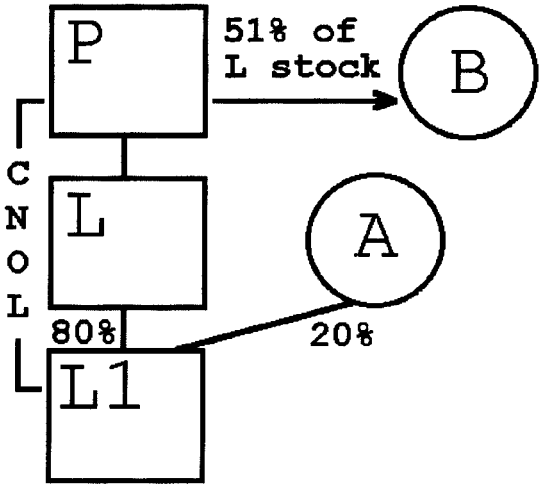

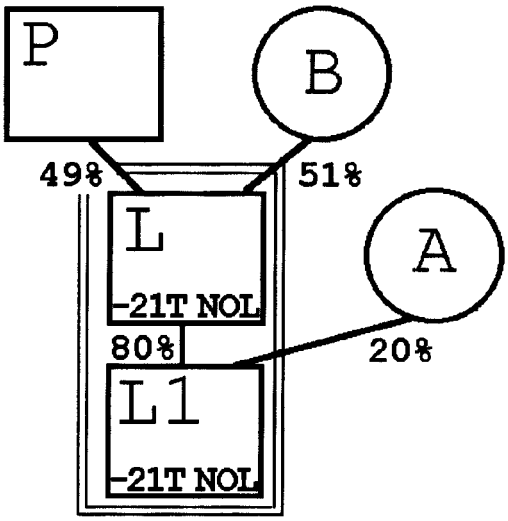

(b) Under § 1.1502–91T(d)(1), L and L1 compose a loss subgroup on September 9, Year 2, the day that they become members of the L group. Under paragraph (b)(1)(ii) of this section, section 382 and the regulations thereunder are applied to L to determine whether it (and therefore the L loss subgroup) has an ownership change with respect to the portion of the Year 1 consolidated net operating loss that is apportioned to L1 on September 9, Year 2. L has an ownership change resulting from P's sale of 51 percent of the L stock to A. Therefore, the L loss subgroup has an ownership change with respect to that loss.

Example 4. Loss group and loss subgroup—contemporaneous ownership changes. (a) A owns all the stock of corporation M, M owns 35 percent and B owns 65 percent of the L stock, and L owns all the L1 stock. The L group has a consolidated net operating loss arising in Year 1 that is carried over to Year 2. On May 19, Year 2, B sells 45 percent of the L stock to M for cash. M, L, and L1 thereafter file consolidated returns. L and L1 are each apportioned a portion of the Year 1 consolidated net operating loss, which they carry over to the M group's Year 2 and Year 3 consolidated return years. The M group has a consolidated net operating loss arising in Year 2 that is carried over to Year 3. On June 9, Year 3, A sells 70 percent of the M stock to C. The following is a graphic illustration of these facts:

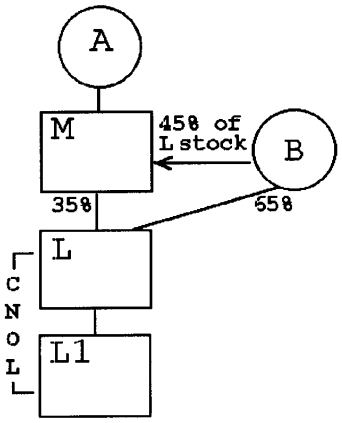

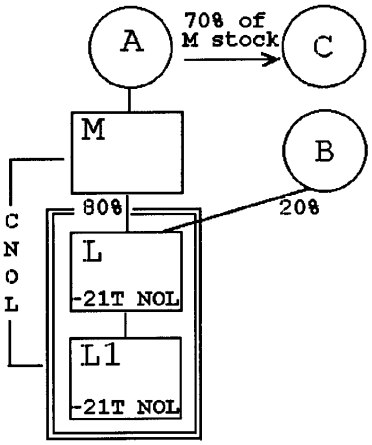

(b) Under § 1.1502–91T(d)(1), L and L1 compose a loss subgroup on May 19, Year 2, the day they become members of the M group. Under paragraph (b)(1)(ii) of this section, section 382 and the regulations thereunder are applied to L to determine whether L (and therefore the L loss subgroup) has an ownership change with respect to the loss carryovers from Year 1 on May 19, Year 2, a testing date because of B's sale of L stock to M. The sale of L stock to M results in only a 45 percentage point increase in A's ownership of L stock. Thus, there is no ownership change of L (or the L loss subgroup) with respect to those loss carryovers under paragraph (b)(1)(ii) of this section on that day.

(c) June 9, Year 3, is also a testing date with respect to the L loss subgroup because of A's sale of M stock to C. The sale results in a 56 percentage point increase in C's ownership of L stock, and L has an ownership change. Therefore, the L loss subgroup has an ownership change on that day with respect to the loss carryovers from Year 1.

(d) Paragraph (b)(1)(i) of this section requires that section 382 and the regulations thereunder be applied to M to determine whether M (and therefore the M loss group) has an ownership change with respect to the net operating loss carryover from Year 2 on June 9, Year 3, a testing date because of A's sale of M stock to C. The sale results in a 70 percentage point increase in C's ownership of M stock, and M has an ownership change. Therefore, the M loss group has an ownership change on that day with respect to that loss carryover.

(3) *Special adjustments*—(i) *Common parent succeeded by a new common parent.* For purposes of determining if a loss group has an ownership change, if the common parent of a loss group is succeeded or acquired by a new common parent and the loss group remains in existence, the new common parent is treated as a continuation of the former common parent with appropriate adjustments to take into account shifts in ownership of the former common parent during the testing period (including shifts that occur incident to the common parent's becoming the former common parent).

(ii) *Newly created loss subgroup parent.* For purposes of determining if a loss subgroup has an ownership change, if the member that is the loss subgroup parent has not been the loss subgroup parent for at least 3 years as of a testing date, appropriate adjustments must be made to take into account owner shifts of members of the loss subgroup so that the structure of the loss subgroup does not have the effect of avoiding an ownership change under section 382. (See paragraph (b)(3)(iii) *Example 3* of this section.)

(iii) *Examples.* The following examples illustrate the principles of this paragraph (b)(3).

Example 1. New common parent acquires old common parent. (a) A, who owns all the L stock, sells 30 percent of the L stock to B on August 26, Year 1. L owns all the L1 stock. The L group has a consolidated net operating loss arising in Year 1 that is carried over to Year 3. On July 16, Year 2, A and B transfer their L stock to a newly created holding company, HC, in exchange for 70 percent and 30 percent, respectively, of the HC stock. HC, L, and L1 thereafter file consolidated returns. Under the principles of § 1.1502–75(d), the L loss group is treated as remaining in existence, with HC taking the place of L as the new common parent of the loss group. The following is a graphic illustration of these facts:

BILLING CODE 4830–01–U

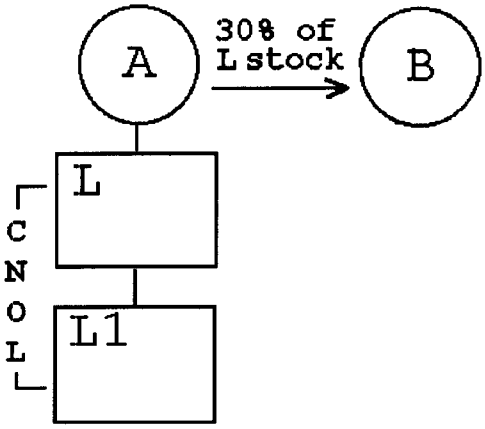

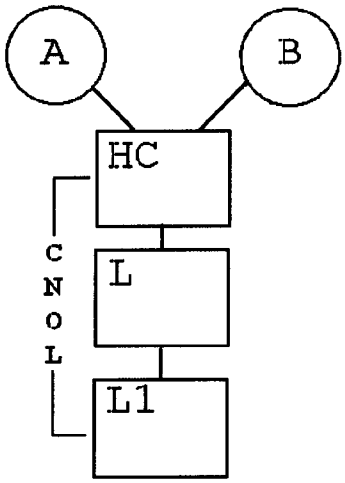

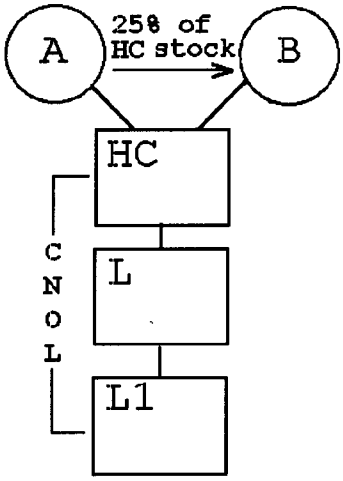

BILLING CODE 4830–01–C

(b) On November 11, Year 3, A sells 25 percent of the HC stock to B. For purposes of determining if the L loss group has an ownership change under paragraph (b)(1)(i) of this section on November 11, Year 3, HC is treated as a continuation of L under paragraph (b)(3)(i) of this section because it acquired L and became the common parent without terminating the L loss group. Accordingly, HC's testing period commences on January 1, Year 1, the first day of the taxable year of the L loss group in which the consolidated net operating loss that is carried over to Year 3 arose (see § 1.382–2T(d)(3)(i)). Immediately after the close of November 11, Year 3, B's percentage ownership interest in the common parent of the loss group (HC) has increased by 55 percentage points over its lowest percentage ownership during the testing period (zero percent). Accordingly, HC and the L loss group have an ownership change on that day.

Example 2. New common parent in case in which common parent ceases to exist. (a) A, B, and C each own one-third of the L stock. L owns all the L1 stock. The L group has a consolidated net operating loss arising in Year 2 that is carried over to Year 3. On November 22, Year 3, L is merged into P, a corporation owned by D, and L1 thereafter files consolidated returns with P. A, B, and C, as a result of owning stock of L, own 90 percent of P's stock after the merger. D owns the remaining 10 percent of P's stock. The merger of L into P qualifies as a reverse acquisition of the L group under § 1.1502–75(d)(3)(i), and the L loss group is treated as remaining in existence, with P taking the place of L as the new common parent of the L group. The following is a graphic illustration of these facts:

BILLING CODE 4830–01–U

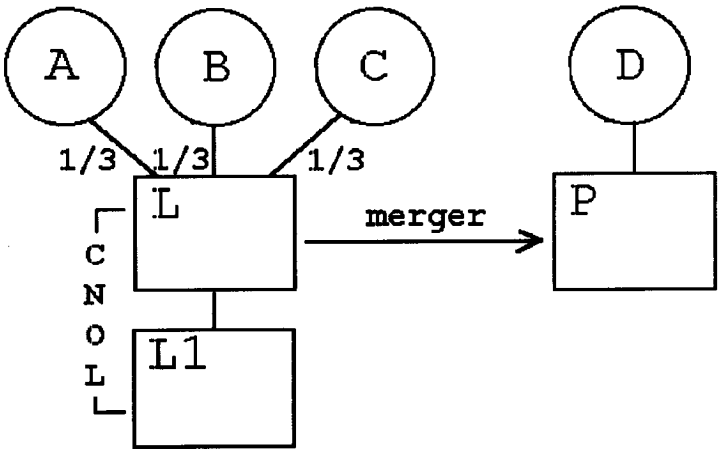

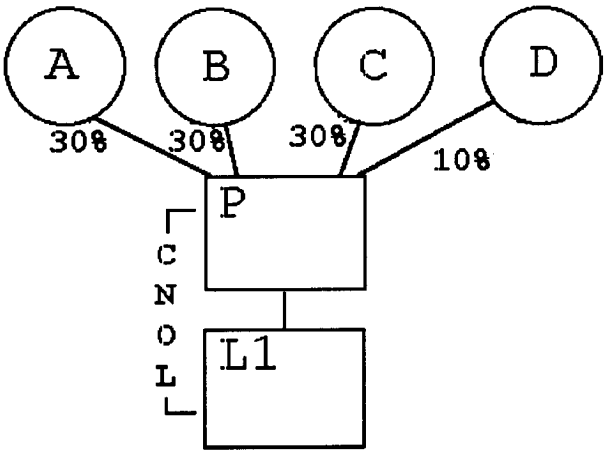

(b) For purposes of determining if the L loss group has an ownership change on November 22, Year 3, the day of the merger, P is treated as a continuation of L so that the testing period for P begins on January 1, Year 2, the first day of the taxable year of the L loss group in which the consolidated net operating loss that is carried over to Year 3 arose. Immediately after the close of November 22, Year 3, D is the only 5-percent shareholder that has increased his ownership interest in P during the testing period (from zero to 10 percentage points).

(c) The facts are the same as in paragraph (a) of this *Example 2,* except that A has held 23⅓ shares (23⅓ percent) of L's stock for five years, and A purchased an additional 10 shares of L stock from E two years before the merger. Immediately after the close of the day of the merger (a testing date), A's ownership interest in P, the common parent of the L loss group, has increased by 6⅔ percentage points over her lowest percentage ownership during the testing period (23⅓ percent to 30 percent).

(d) The facts are the same as in (a) of this *Example 2,* except that P has a net operating loss arising in Year 1 that is carried to the first consolidated return year ending after the day of the merger. Solely for purposes of determining whether the L loss group has an ownership change under paragraph (b)(1)(i) of this section, the testing period for P

commences on January 1, Year 2. P does not determine the earliest day for its testing period by reference to its net operating loss carryover from Year 1, which §§ 1502–1(f)(3) and 1.1502–75(d)(3)(i) treat as arising in a SRLY. See § 1.1502–94T to determine the application of section 382 with respect to P's net operating loss carryover.

Example 3. Newly acquired loss subgroup parent. (a) P owns all the L stock and L owns all the L1 stock. The P group has a consolidated net operating loss arising in Year 1 that is carried over to Year 3. On January 19, Year 2, L issues a 20 percent stock interest to B. On February 5, Year 3, P contributes its L stock to a newly formed subsidiary, HC, in exchange for all the HC stock, and distributes the HC stock to its sole shareholder A. HC, L, and L1 thereafter file consolidated returns. A portion of the P group's Year 1 consolidated net operating loss is apportioned to L and L1 under § 1.1502–21T(b) and is carried over to the HC group's year ending after February 5, Year 3. HC, L, and L1 compose a loss subgroup within the meaning of § 1.1502–91T(d) with respect to the net operating loss carryovers from Year 1. The following is a graphic illustration of these facts:

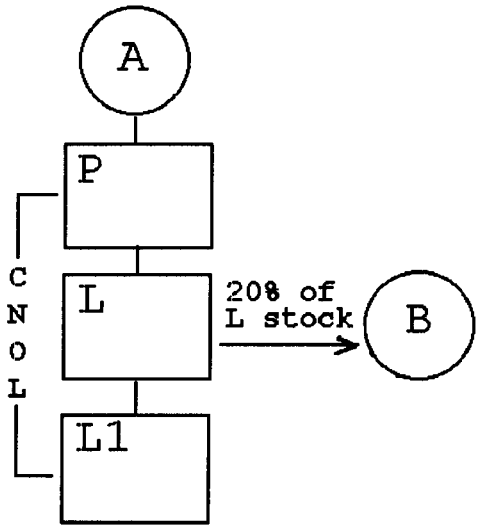

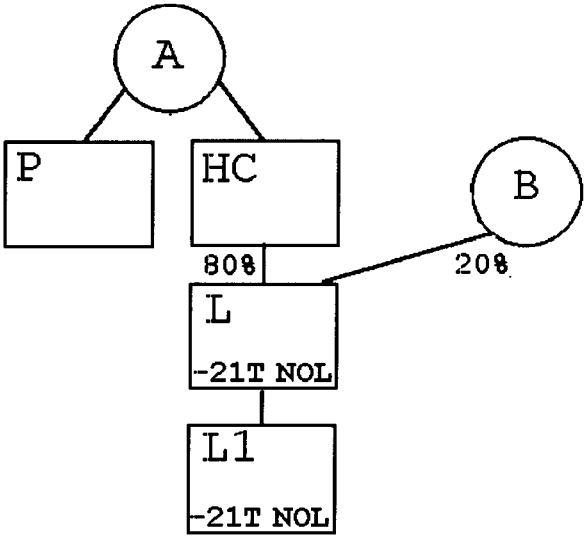

BILLING CODE 4830–01–C

(b) February 5, Year 3, is a testing date for HC as the loss subgroup parent with respect to the net operating loss carryovers of L and L1 from Year 1. See paragraph (b)(1)(ii)(B) of this section. For purposes of determining whether HC has an ownership change on the testing date, appropriate adjustments must be made with respect to the changes in the percentage ownership of the stock of HC because HC was not the loss subgroup parent for at least 3 years prior to the day on which it became a member of the HC loss subgroup (a testing date). The appropriate adjustments include adjustments so that HC succeeds to the owner shifts of other members of the former group. Thus, HC succeeds to the owner shift of L that resulted from the sale of the 20 percent interest to B in determining whether the HC loss subgroup has an ownership change on February 5, Year 3, and on any subsequent testing date that includes January 19, Year 2.

(4) *End of separate tracking of certain losses.* If § 1.1502–96T(a) (relating to the end of separate tracking of attributes) applies to a loss subgroup, then, while one or more members that were included in the loss subgroup remain members of the consolidated group, there is an ownership change with respect to their attributes described in § 1.1502–96T(a)(2) only if the consolidated group is a loss group and has an ownership change under paragraph (b)(1)(i) of this section (or such a member has an ownership change under § 1.1502–96T(b) (relating to ownership changes of subsidiaries)). If, however, the loss subgroup has had

an ownership change before § 1.1502–96T(a) applies, see § 1.1502–96T(c) for the continuing application of the subgroup's section 382 limitation with respect to its pre-change subgroup attributes.

(c) *Supplemental rules for determining ownership change*—(1) *Scope.* This paragraph (c) contains a supplemental rule for determining whether there is an ownership change of a loss group (or loss subgroup). It applies in addition to, and not instead of, the rules of paragraph (b) of this section. Thus, for example, if the common parent of the loss group has an ownership change under paragraph (b) of this section, the loss group has an ownership change even if, by applying this paragraph (c), the common parent would not have an ownership change.

(2) *Cause for applying supplemental rule.* This paragraph (c) applies to a loss group (or loss subgroup) if—

(i) Any 5-percent shareholder of the common parent (or loss subgroup parent) increases its percentage ownership interest in the stock of both—

(A) A subsidiary of the loss group (or loss subgroup) other than by a direct or indirect acquisition of stock of the common parent (or loss subgroup parent); and

(B) The common parent (or loss subgroup parent); and

(ii) Those increases occur within a 3 year period ending on any day of a consolidated return year or, if shorter, the period beginning on the first day following the most recent ownership change of the loss group (or loss subgroup).

(3) *Operating rules.* Solely for purposes of this paragraph (c)—

(i) A 5-percent shareholder of the common parent (or loss subgroup parent) is treated as increasing its percentage ownership interest in the common parent (or loss subgroup parent) or a subsidiary to the extent, if any, that any person acting pursuant to a plan or arrangement with the 5-percent shareholder increases its percentage ownership interest in the stock of that entity;

(ii) The rules in section 382(l)(3) and §§ 1.382–2T(h) and 1.382–4(d) (relating to constructive ownership) apply with respect to the stock of the subsidiary by treating such stock as stock of a loss corporation; and

(iii) In the case of a loss subgroup, a subsidiary includes any member of the loss subgroup other than the loss subgroup parent. (The loss subgroup parent is, however, a subsidiary of the loss group of which it is a member.)

(4) *Supplemental ownership change rules.* The determination whether the common parent (or loss subgroup parent) has an ownership change is made by applying paragraph (b)(1) of this section as modified by the following additional rules—

(i) *Additional testing dates for the common parent (or loss subgroup parent).* A testing date for the common parent (or loss subgroup parent) also includes—

(A) Each day on which there is an increase in the percentage ownership of stock of a subsidiary as described in paragraph (c)(2) of this section; and

(B) The first day of the first consolidated return year for which the group is a loss group (or the members compose a loss subgroup);

(ii) *Treatment of subsidiary stock as stock of the common parent (or loss subgroup parent).* The common parent (or loss subgroup parent) is treated as though it had issued to the person acquiring (or deemed to acquire) the subsidiary stock an amount of its own stock (by value) that equals the value of the subsidiary stock represented by the percentage increase in that person's ownership of the subsidiary (determined on a separate entity basis). A similar principle applies if the increase in percentage ownership interest is effected by a redemption or similar transaction; and

(iii) *5-percent shareholder of the common parent (or loss subgroup parent).* Any person described in paragraph (c)(3)(i) of this section who is acting pursuant to the plan or arrangement is treated as a 5-percent shareholder of the common parent (or loss subgroup parent).

(5) *Examples.* The following examples illustrate the principles of this paragraph (c).

Example 1. Stock of the common parent under supplemental rules. (a) A owns all the L stock. L is not a member of an affiliated group and has a net operating loss carryover arising in Year 1 that is carried over to Year 6. On September 20, Year 6, L transfers all of its assets and liabilities to a newly created subsidiary, S, in exchange for S stock. L and S thereafter file consolidated returns. On November 23, Year 6, B contributes cash to L in exchange for a 45 percent ownership interest in L and contributes cash to S for a 20 percent ownership interest in S.

(b) B is a 5-percent shareholder of L who increases his percentage ownership interest in L and S during the 3 year period ending on November 23, Year 6. Under paragraph (c)(4)(ii) of this section, the determination whether L (the common parent of a loss group) has an ownership change on November 23, Year 6 (or on any testing date in the testing period which includes November 23, Year 6), is made by applying paragraph (b)(1)(i) of this section and by treating the value of B's 20 percent ownership interest in S as if it were L stock issued to B.

Example 2. Plan or arrangement—public offering of subsidiary stock. (a) A owns all the stock of L and L owns all the stock of L1. The L group has a consolidated net operating loss arising in Year 1 that resulted from the operations of L1 and that is carried over to Year 2. As part of a plan, A sells 49 percent of the L stock to B on October 7, Year 2, and L1 issues new stock representing a 20 percent ownership interest in L1 to the public on November 6, Year 2. The following is a graphic illustration of these facts:

BILLING CODE 4830–01–U

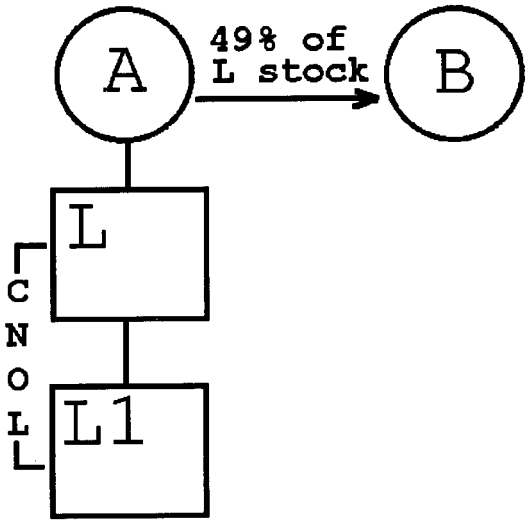

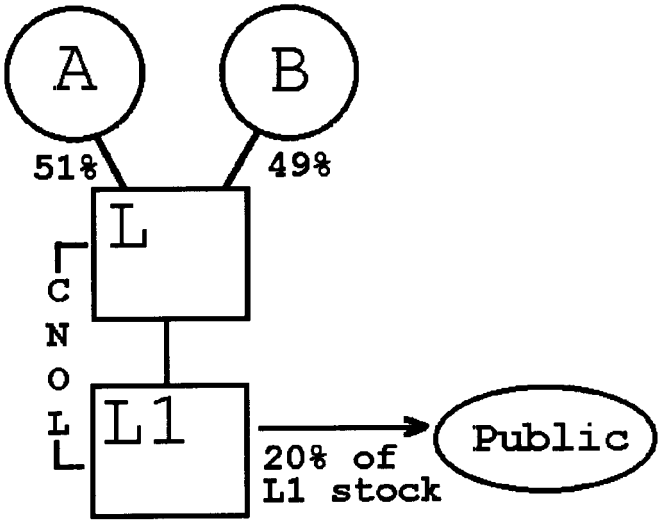

BILLING CODE 4830–01–C

(b) A's sale of the L stock to B does not cause an ownership change of the L loss group on October 7, Year 2, under the rules of § 1.382–2T and paragraph (b)(1)(i) of this section.

(c) Because the issuance of L1 stock to the public occurs in connection with B's acquisition of L stock pursuant to a plan, paragraph (c)(4) of this section applies to determine whether the L loss group has an ownership change on November 6, Year 2 (or on any testing date for which the testing period includes November 6, Year 2).

(d) *Testing period following ownership change under this section.* If a loss group (or a loss subgroup) has had an ownership change under this section, the testing period for determining a subsequent ownership change with respect to pre-change consolidated attributes (or pre-change subgroup attributes) begins no earlier than the first day following the loss group's (or loss subgroup's) most recent change date.

(e) *Information statements.*—(1) *Common parent of a loss group.* The common parent of a loss group must file the information statement required by § 1.382–2T(a)(2)(ii) for a consolidated return year because of any owner shift, equity structure shift, or the issuance or transfer of an option—

(i) With respect to the common parent and with respect to any subsidiary stock subject to paragraph (c) of this section; and

(ii) With respect to an ownership change described in § 1.1502–96T(b) (relating to ownership changes of subsidiaries).

(2) *Abbreviated statement with respect to loss subgroups.* The common parent of a consolidated group that has a loss subgroup during a consolidated return year must file the information statement required by § 1.382–2T(a)(2)(ii) because of any owner shift, equity structure shift, or issuance or transfer of an option with respect to the loss subgroup parent and with respect to any subsidiary stock subject to paragraph (c) of this section. Instead of filing a separate statement for each loss subgroup parent, the common parent (which is treated as a loss corporation) may file the single statement described in paragraph (e)(1) of this section. In addition to the information concerning stock ownership of the common parent, the single statement must identify each loss subgroup parent and state which loss subgroups, if any, have had ownership changes during the consolidated return year. The loss subgroup parent is, however, still required to maintain the records necessary to determine if the loss subgroup has an ownership change.

This paragraph (e)(2) applies with respect to the attributes of a loss subgroup until, under § 1.1502–96T(a), the attributes are no longer treated as described in § 1.1502–91T(d) (relating to the definition of loss subgroup). After that time, the information statement described in paragraph (e)(1) of this section must be filed with respect to those attributes.

§ 1.1502–93T Consolidated section 382 limitation (or subgroup section 382 limitation) (temporary).

(a) *Determination of the consolidated section 382 limitation (or subgroup section 382 limitation)*—(1) *In general.* Following an ownership change, the consolidated section 382 limitation (or subgroup section 382 limitation) for any post-change year is an amount equal to the value of the loss group (or loss subgroup), as defined in paragraph (b) of this section, multiplied by the long-term tax-exempt rate that applies with respect to the ownership change, and adjusted as required by section 382 and the regulations thereunder. See, for example, section 382(b)(2) (relating to the carryforward of unused section 382 limitation), section 382(b)(3)(B) (relating to the section 382 limitation for the post-change year that includes the change date), section 382(m)(2) (relating to short taxable years), and section 382(h) (relating to recognized built-in gains and section 338 gains).

(2) *Coordination with apportionment rule.* For special rules relating to apportionment of a consolidated section 382 limitation (or a subgroup section 382 limitation) when one or more corporations cease to be members of a loss group (or a loss subgroup) and to aggregation of amounts so apportioned, see § 1.1502–95T(c).

(b) *Value of the loss group (or loss subgroup)*—(1) *Stock value immediately before ownership change.* Subject to any adjustment under paragraph (b)(2) of this section, the value of the loss group (or loss subgroup) is the value, immediately before the ownership change, of the stock of each member, other than stock that is owned directly or indirectly by another member. For this purpose—

(i) Ownership is determined under § 1.382–2T;

(ii) A member is considered to indirectly own stock of another member through a nonmember only if the member has a 5-percent or greater ownership interest in the nonmember; and

(iii) Stock includes stock described in section 1504(a)(4) and § 1.382–2T(f)(18)(ii) and (iii).

(2) *Adjustment to value.* The value of the loss group (or loss subgroup), as determined under paragraph (b)(1) of this section, is adjusted under any rule in section 382 or the regulations thereunder requiring an adjustment to such value for purposes of computing the amount of the section 382 limitation. See, for example, section 382(e)(2) (redemptions and corporate contractions), section 382(l)(1) (certain capital contributions) and section 382(l)(4) (ownership of substantial nonbusiness assets). The value of the loss group (or loss subgroup) determined under this paragraph (b) is also adjusted to the extent necessary to prevent any duplication of the value of the stock of a member. For example, the principles of § 1.382–8T (relating to controlled groups of corporations) apply in determining the value of a loss group (or loss subgroup) if, under § 1.1502–91T(g)(2), members are not included in the determination whether the group (or loss subgroup) has a net unrealized built-in loss.

(3) *Examples.* The following examples illustrate the principles of this paragraph (b).

Example 1. Basic case. (a) L, L1, and L2 compose a loss group. L has outstanding common stock, the value of which is $100. L1 has outstanding common stock and preferred stock that is described in section 1504(a)(4). L owns 90 percent of the L1 common stock, and A owns the remaining 10 percent of the L1 common stock plus all the preferred stock. The value of the L1 common stock is $40, and the value of the L1 preferred stock is $30. L2 has outstanding common stock, 50 percent of which is owned by L and 50 percent by L1. The L group has an ownership change. The following is a graphic illustration of these facts:

BILLING CODE 4830–01–U

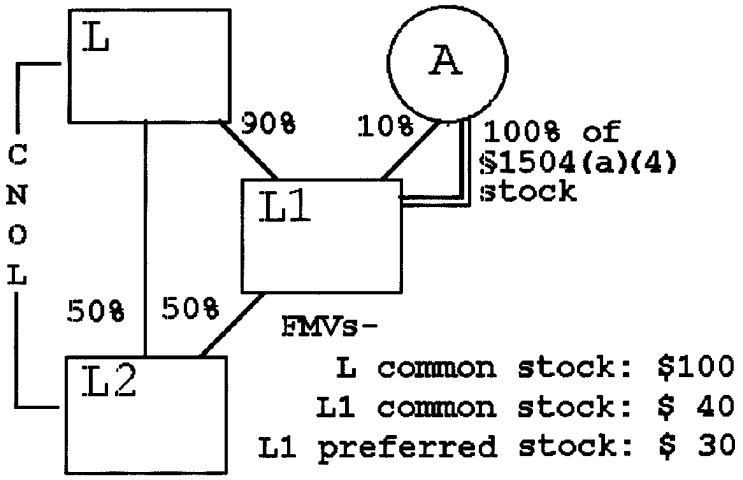

(b) Under paragraph (b)(1) of this section, the L group does not include the value of the stock of any member that is owned directly or indirectly by another member in computing its consolidated section 382 limitation. Accordingly, the value of the stock of the loss group is $134, the sum of the value of—

(1) The common stock of L ($100);

(2) the 10 percent of the L1 common stock ($4) owned by A; and

(3) The L1 preferred stock ($30) owned by A.

Example 2. Indirect ownership. (a) L and L1 compose a consolidated group. L's stock has a value of $100. L owns 80 shares (worth $80) and corporation M owns 20 shares (worth $20) of the L1 stock. L also owns 79 percent of the stock of corporation M. The L group has an ownership change. The following is a graphic illustration of these facts:

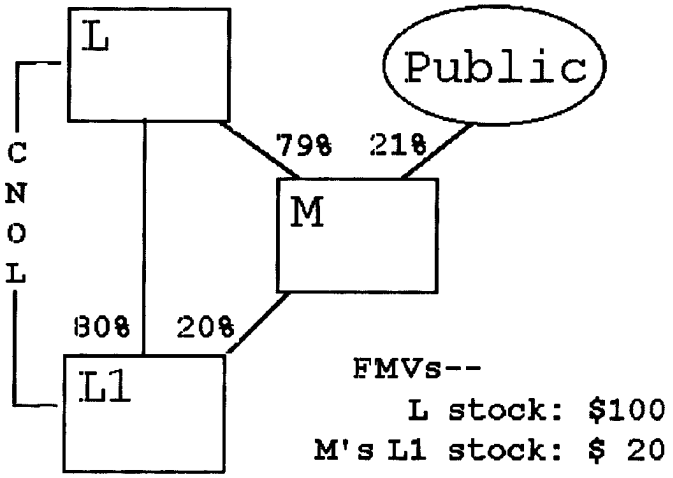

BILLING CODE 4830–01–C

(b) Under paragraph (b)(1) of this section, because of L's more than 5 percent ownership interest in M, a nonmember, L is considered to indirectly own 15.8 shares of the L1 stock held by M (79% x 20 shares). The value of the L loss group is $104.20, the sum of the values of—

(1) The L stock ($100); and

(2) The L1 stock not owned directly or indirectly by L (21% x $20, or $4.20).

(c) *Recognized built-in gain of a loss group or loss subgroup.* If a loss group (or loss subgroup) has a net unrealized built-in gain, any recognized built-in gain of the loss group (or loss subgroup) is taken into account under section 382(h) in determining the consolidated section 382 limitation (or subgroup section 382 limitation).

(d) *Continuity of business*—(1) *In general.* A loss group (or a loss subgroup) is treated as a single entity for purposes of determining whether it satisfies the continuity of business enterprise requirement of section 382(c)(1).

(2) *Example.* The following example illustrates the principle of this paragraph (d).

Example. Continuity of business enterprise. L owns all the stock of two subsidiaries, L1 and L2. The L group has an ownership change. It has pre-change consolidated attributes attributable to L2. Each of the members has historically conducted a separate line of business. Each line of business is approximately equal in value. One year after the ownership change, L discontinues its separate business and the business of L2. The separate business of L1 is continued for the remainder of the 2 year period following the ownership change. The continuity of business enterprise requirement of section 382(c)(1) is met even though the separate businesses of L and L2 are discontinued.

(e) *Limitations of losses under other rules.* If a section 382 limitation for a post-change year exceeds the consolidated taxable income that may be offset by pre-change attributes for any reason, including the application of the limitation of § 1.1502–21T(c), the amount of the excess is carried forward under section 382(b)(2) (relating to the carryforward of unused section 382 limitation).

§ 1.1502–94T Coordination with section 382 and the regulations thereunder when a corporation becomes a member of a consolidated group (temporary).

(a) *Scope*—(1) *In general.* This section applies section 382 and the regulations thereunder to a corporation that is a new loss member of a consolidated group. A corporation is a new loss member if it—

(i) Carries over a net operating loss that arose (or is treated under § 1.1502–21T(c) as arising) in a SRLY with respect to the current group, and that is not described in § 1.1502–91T(d)(1); or

(ii) Has a net unrealized built-in loss (determined under paragraph (c) of this section on the day it becomes a member of the current group by treating that day as a change date) that is not taken into account under § 1.1502–91T(d)(2) in determining whether two or more corporations compose a loss subgroup.

(2) *Successor corporation as new loss member.* A new loss member also includes any successor to a corporation that has a net operating loss carryover arising in a SRLY and that is treated as remaining in existence under § 1.382–2(a)(1)(ii) following a transaction described in section 381(a).

(3) *Coordination in the case of a loss subgroup.* For rules regarding the determination of whether there is an ownership change of a loss subgroup with respect to a net operating loss or a net unrealized built-in loss described in § 1.1502–91T(d) (relating to the definition of loss subgroup) and the computation of a subgroup section 382 limitation following such an ownership change, see §§ 1.1502–92T and 1.1502–93T.

(4) *End of separate tracking of certain losses.* If § 1.1502–96T(a) (relating to the end of separate tracking of attributes) applies to a new loss member, then, while that member remains a member of the consolidated group, there is an ownership change with respect to its attributes described in § 1.1502–96T(a)(2) only if the consolidated group is a loss group and has an ownership change under § 1.1502–92T(b)(1)(i) (or that member has an ownership change under § 1.1502–96T(b) (relating to ownership changes of subsidiaries)). If, however, the new loss member has had an ownership change before § 1.1502–96T(a) applies, see § 1.1502–96T(c) for the continuing application of the section 382 limitation with respect to the member's pre-change losses.

(5) *Cross-reference.* See section 382(a) and § 1.1502–96T(c) for the continuing effect of an ownership change after a corporation becomes or ceases to be a member.

(b) *Application of section 382 to a new loss member*—(1) *In general.* Section 382 and the regulations thereunder apply to a new loss member to determine, on a separate entity basis, whether and to what extent a section 382 limitation applies to limit the amount of consolidated taxable income that may be offset by the new loss member's pre-change separate attributes. For example, if an ownership change with respect to the new loss member occurs under section 382 and the regulations thereunder, the amount of consolidated taxable income for any post-change year that may be offset by the new loss member's pre-change separate attributes shall not exceed the section 382 limitation as determined separately under section 382(b) with respect to that member for such year. If

the post-change year includes the change date, section 382(b)(3)(A) is applied so that the section 382 limitation of the new loss member does not apply to the portion of the taxable income for such year that is allocable to the period in such year on or before the change date. See generally § 1.382–6 (relating to the allocation of income and loss).

(2) *Adjustment to value.* The value of the new loss member is adjusted to the extent necessary to prevent any duplication of the value of the stock of a member. For example, the principles of § 1.382–8T (relating to controlled groups of corporations) apply in determining the value of a new loss member.

(3) *Pre-change separate attribute defined.* A pre-change separate attribute of a new loss member is—

(i) Any net operating loss carryover of the new loss member described in paragraph (a)(1) of this section; and

(ii) Any recognized built-in loss of the new loss member.

(4) *Examples.* The following examples illustrate the principles of this paragraph (b).

Example 1. Basic case. (a) A and P each own 50 percent of the L stock. On December 19, Year 6, P purchases 30 percent of the L stock from A for cash. L has net operating losses arising in Year 1 and Year 2 that it carries over to Year 6 and Year 7. The following is a graphic illustration of these facts:

BILLING CODE 4830–01–U

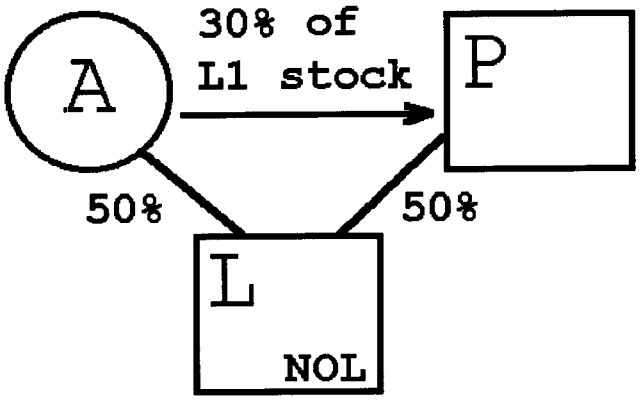

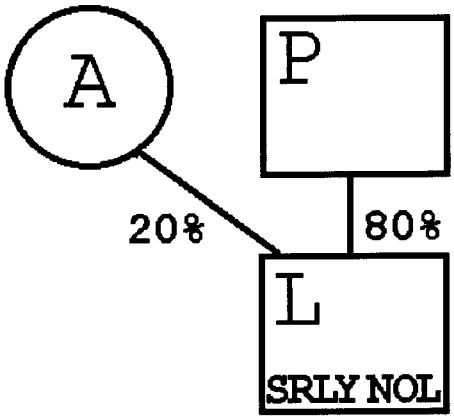

(b) L is a new loss member because it has net operating loss carryovers that arose in a SRLY with respect to the P group and L is not a member of a loss subgroup under § 1.1502–91T(d). Under section 382 and the regulations thereunder, L is a loss corporation on December 19, Year 6, that day is a testing date for L, and the testing period for L commences on December 20, Year 3.

(c) P's purchase of L stock does not cause an ownership change of L on December 19, Year 6, with respect to the net operating loss carryovers from Year 1 and Year 2 under section 382 and § 1.382–2T. The use of the loss carryovers, however, is subject to limitation under § 1.1502–21T(c).

Example 2. Multiple new loss members. (a) The facts are the same as in *Example 1*, and, on December 31, Year 6, L purchases all the stock of L1 from B for cash. L1 has a net operating loss of $40 arising in Year 3 that it carries over to Year 7. The following is a graphic illustration of these facts:

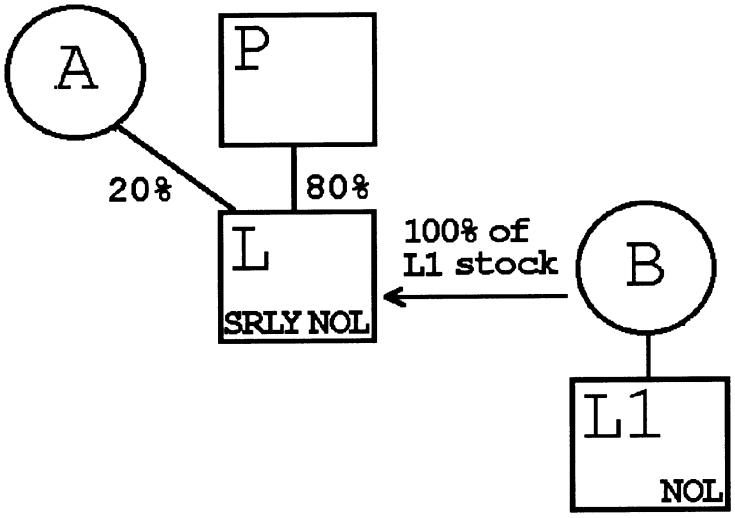

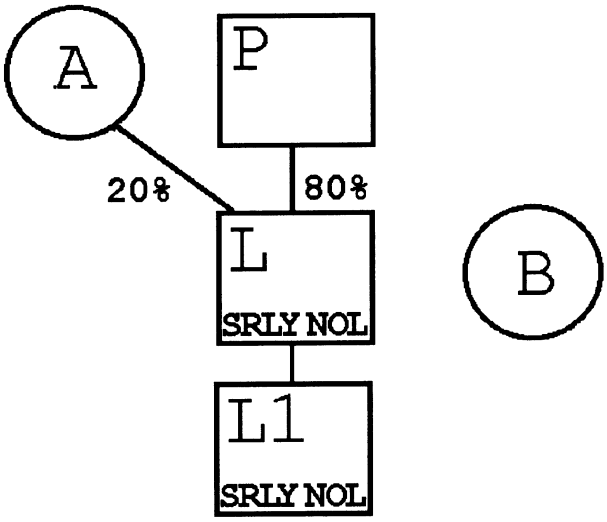

BILLING CODE 4830–01–C

(b) L1 is a new loss member because it has a net operating loss carryover from Year 3 that arose in a SRLY with respect to the P group and L1 is not a member of a loss subgroup under § 1.1502–91T(d)(1).

(c) L's purchase of all the stock of L1 causes an ownership change of L1 on December 31, Year 6, under section 382 and § 1.382–2T. Accordingly, a section 382 limitation based on the value of the L1 stock immediately before the ownership change limits the amount of consolidated taxable income of the P group for any post-change year that may be offset by L1's loss from Year 3.

(d) L1's ownership change in connection with its becoming a member of the P group is an ownership change described in § 1.1502–96T(a). Thus, starting on January 1, Year 7, the P group no longer separately tracks owner shifts of the stock of L1 with respect to L1's loss from Year 3. Instead, the P group is a loss group because of such loss under § 1.1502–91T(c).

Example 3. Ownership changes of new loss members. (a) The facts are the same as in *Example 2*, and, on April 30, Year 7, C purchases all the stock of P for cash.

(b) L is a new loss member on April 30, Year 7, because its Year 1 and Year 2 losses arose in SRLYs with respect to the P group and it is not a member of a loss subgroup under § 1.1502–91T(d)(1). The testing period for L commences on May 1, Year 4. C's purchase of all the P stock causes an ownership change of L on April 30, Year 7, under section 382 and § 1.382–2T with respect to its Year 1 and Year 2 losses. Accordingly, a section 382 limitation based on the value of the L stock immediately before the ownership change limits the amount of consolidated taxable income of the P group for any post-change year that may be offset by L's Year 1 and Year 2 losses. The use of those carryovers is also subject to limitation under § 1.1502–21T(c).

(c) The P group is a loss group on April 30, Year 7, because it is entitled to use L1's loss from Year 3, and such loss is no longer treated as a loss of a new loss member starting the day after L1's ownership change on December 31, Year 6. See §§ 1.1502–96T(a) and 1.1502–91T(c)(2). C's purchase of all the P stock causes an ownership change of P, and therefore the P loss group, on April 30, Year 7, with respect to L1's Year 3 loss. Accordingly, a consolidated section 382 limitation based on the value of the P stock immediately before the ownership change limits the amount of consolidated taxable income of the P group for any post-change year that may be offset by L1's Year 3 loss.

(c) *Built-in gains and losses.* As the context may require, the principles of §§ 1.1502–91T(g) and (h) and 1.1502–93T(c) (relating to built-in gains and losses) apply to a new loss member on a separate entity basis. See § 1.1502–91T(g)(3).

(d) *Information statements.* The common parent of a consolidated group that has a new loss member subject to paragraph (b)(1) of this section during a consolidated return year must file the information statement required by § 1.382–2T(a)(2)(ii) because of any owner shift, equity structure shift, or issuance or transfer of an option with

respect to the new loss member. Instead of filing a separate statement for each new loss member the common parent may file a single statement described in § 1.382–2T(a)(2)(ii) with respect to the stock ownership of the common parent (which is treated as a loss corporation). In addition to the information concerning stock ownership of the common parent, the single statement must identify each new loss member and state which new loss members, if any, have had ownership changes during the consolidated return year. The new loss member is, however, required to maintain the records necessary to determine if it has an ownership change. This paragraph (d) applies with respect to the attributes of a new loss member until an event occurs which ends separate tracking under § 1.1502–96T(a). After that time, the information statement described in § 1.1502–92T(e)(1) must be filed with respect to these attributes.

§ 1.1502–95T Rules on ceasing to be a member of a consolidated group (or loss subgroup) (temporary).

(a) *In general*—(1) *Consolidated group.* This section provides rules for applying section 382 on or after the day that a member ceases to be a member of a consolidated group (or loss subgroup). The rules concern how to determine whether an ownership change occurs with respect to losses of the member, and how a consolidated section 382 limitation (or subgroup section 382 limitation) is apportioned to the member. As the context requires, a reference in this section to a loss group, a member, or a corporation also includes a reference to a loss subgroup, and a reference to a consolidated section 382 limitation also includes a reference to a subgroup section 382 limitation.

(2) *Election by common parent.* Only the common parent (not the loss subgroup parent) may make the election under paragraph (c) of this section to apportion either a consolidated section 382 limitation or a subgroup section 382 limitation.

(3) *Coordination with §§ 1.1502–91T through 1.1502–93T.* For rules regarding the determination of whether there is an ownership change of a loss subgroup and the computation of a subgroup section 382 limitation following such an ownership change, see §§ 1.1502–91T through 1.1502–93T.

(b) *Separate application of section 382 when a member leaves a consolidated group*—(1) *In general.* Except as provided in §§ 1.1502–91T through 1.1502–93T (relating to rules applicable to loss groups and loss subgroups), section 382 and the regulations thereunder apply to a corporation on a separate entity basis after it ceases to be a member of a consolidated group (or loss subgroup). Solely for purposes of determining whether a corporation has an ownership change—

(i) Any portion of a consolidated net operating loss that is apportioned to the corporation under § 1.1502–21T(b) is treated as a net operating loss of the corporation beginning on the first day of the taxable year in which the loss arose;

(ii) The testing period may include the period during which (or before which) the corporation was a member of the group (or loss subgroup); and

(iii) Except to the extent provided in § 1.1502–20(g) (relating to reattributed losses), the day it ceases to be a member of a consolidated group is treated as a testing date of the corporation within the meaning of § 1.382–2(a)(4).

(2) *Effect of a prior ownership change of the group.* If a loss group has had an ownership change under § 1.1502–92T before a corporation ceases to be a member of a consolidated group (the former member)—

(i) Any pre-change consolidated attribute that is subject to a consolidated section 382 limitation continues to be treated as a pre-change loss with respect to the former member after the attribute is apportioned to the former member;

(ii) The former member's section 382 limitation with respect to such attribute is zero except to the extent the common parent apportions under paragraph (c) of this section all or a part of the consolidated section 382 limitation to the former member;

(iii) The testing period for determining a subsequent ownership change with respect to such attribute begins no earlier than the first day following the loss group's most recent change date; and

(iv) As generally provided under section 382, an ownership change of the former member that occurs on or after the day it ceases to be a member of a loss group may result in an additional, lesser limitation amount with respect to such loss.

(3) *Application in the case of a loss subgroup.* If two or more former members are included in the same loss subgroup immediately after they cease to be members of a consolidated group, the principles of paragraphs (b) and (c) of this section apply to the loss subgroup. Therefore, for example, an apportionment by the common parent under paragraph (c) of this section is made to the loss subgroup rather than separately to its members.

(4) *Examples.* The following examples illustrate the principles of this paragraph (b).

Example 1. Treatment of departing member as a separate corporation throughout the testing period. (a) A owns all the L stock. L owns all the stock of L1 and L2. The L group has a consolidated net operating loss arising in Year 1 that is carried over to Year 3. On January 12, Year 2, A sells 30 percent of the L stock to B. On February 7, Year 3, L sells 40 percent of the L2 stock to C, and L2 ceases to be a member of the group. A portion of the Year 1 consolidated net operating loss is apportioned to L2 under § 1.1502–21T(b) and is carried to L2's first separate return year, which ends December 31, Year 3. The following is a graphic illustration of these facts:

BILLING CODE 4830–01–U

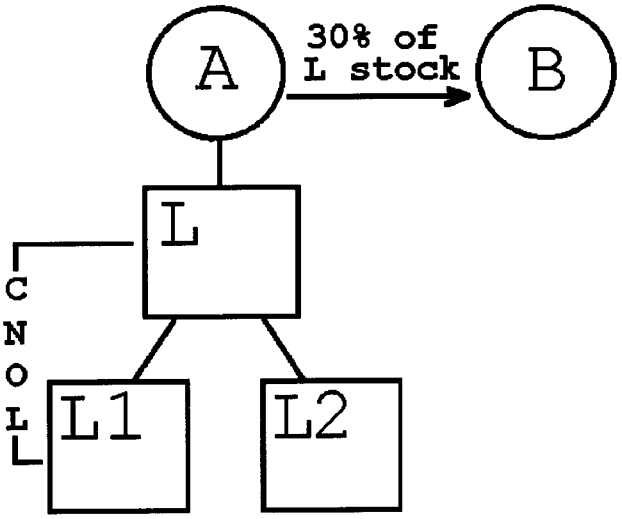

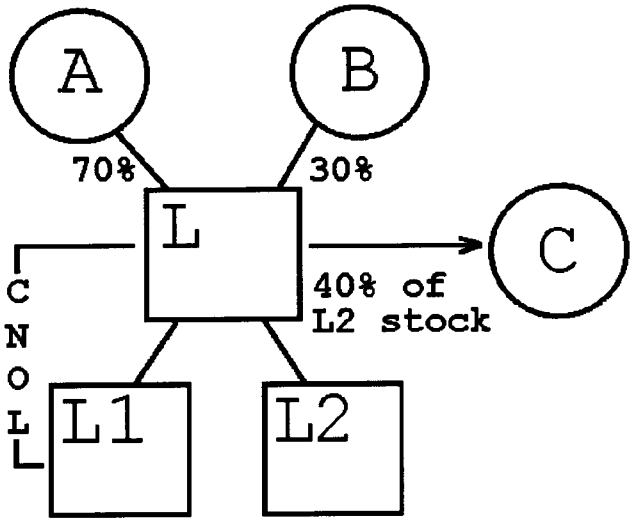

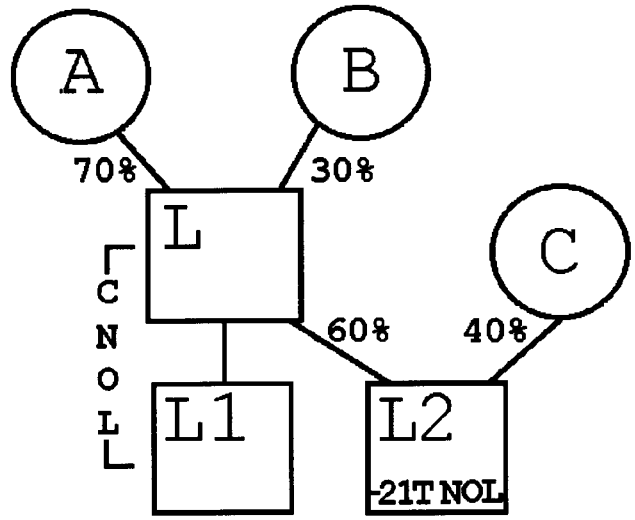

BILLING CODE 4830–01–C

(b) Under paragraph (b)(1) of this section, L2 is a loss corporation on February 7, Year 3. Under paragraph (b)(1)(iii) of this section, February 7, Year 3, is a testing date. Under paragraph (b)(1)(ii) of this section, the testing period for L2 with respect to this testing date commences on January 1, Year 1, the first day of the taxable year in which the portion of the consolidated net operating loss apportioned to L2 arose. Therefore, in determining whether L2 has an ownership change on February 7, Year 3, B's purchase of 30 percent of the L stock and C's purchase of 40 percent of the L2 stock are each owner shifts. L2 has an ownership change under section 382(g) and § 1.382–2T because B and C have increased their ownership interests in L2 by 18 and 40 percentage points, respectively, during the testing period.

Example 2. Effect of prior ownership change of loss group. (a) L owns all the L1 stock and L1 owns all the L2 stock. The L loss group had an ownership change under § 1.1502–92T in Year 2 with respect to a consolidated net operating loss arising in Year 1 and carried over to Year 2 and Year 3. The consolidated section 382 limitation computed solely on the basis of the value of the stock of L is $100. On December 31, Year 2, L1 sells 25 percent of the stock of L2 to B. L2 is apportioned a portion of the Year 1 consolidated net operating loss which it carries over to its first separate return year ending after December 31, Year 2. L2's separate section 382 limitation with respect to this loss is zero unless L elects to apportion all or a part of the consolidated section 382 limitation to L2. (See paragraph (c) of this section for rules regarding the apportionment of a consolidated section 382 limitation.) L apportions $50 of the consolidated section 382 limitation to L2.

(b) On December 31, Year 3, L1 sells its remaining 75 percent stock interest in L2 to C, resulting in an ownership change of L2. L2's section 382 limitation computed on the change date with respect to the value of its stock is $30. Accordingly, L2's section 382 limitation for post-change years ending after December 31, Year 3, with respect to its pre-change losses, including the consolidated net operating losses apportioned to it from the L group, is $30, adjusted as required by section 382 and the regulations thereunder.

(c) *Apportionment of a consolidated section 382 limitation*—(1) *In general.* The common parent may elect to apportion all or any part of a consolidated section 382 limitation to a former member (or loss subgroup). See paragraph (e) of this section for the time and manner of making the election to apportion.

(2) *Amount of apportionment.* The common parent may apportion all or part of each element of the consolidated section 382 limitation determined under § 1.1502–93T. For this purpose, the consolidated section 382 limitation consists of two elements—

(i) The value element, which is the element of the limitation determined under section 382(b)(1) (relating to value multiplied by the long-term tax-exempt rate) without regard to such adjustments as those described in section 382(b)(2) (relating to the carryforward of unused section 382 limitation), section 382(b)(3)(B) (relating to the section 382 limitation for the post-change year that includes the change date), section 382(h) (relating to built-in gains and section 338 gains), and section 382(m)(2) (relating to short taxable years); and

(ii) The adjustment element, which is so much (if any) of the limitation for the taxable year during which the former member ceases to be a member of the consolidated group that is attributable to a carryover of unused limitation under section 382(b)(2) or to recognized built-in gains under 382(h).

(3) *Effect of apportionment on the consolidated section 382 limitation.* The value element of the consolidated section 382 limitation for any post-change year ending after the day that a former member (or loss subgroup) ceases to be a member(s) is reduced to the extent that it is apportioned under this paragraph (c). The consolidated section 382 limitation for the post-change year in which the former member (or loss subgroup) ceases to be a member(s) is also reduced to the extent that the adjustment element for that year is apportioned under this paragraph (c).

(4) *Effect on corporations to which the consolidated section 382 limitation is apportioned.* The amount of the value element that is apportioned to a former member (or loss subgroup) is treated as the amount determined under section 382(b)(1) for purposes of determining the amount of that corporation's (or loss subgroup's) section 382 limitation for any taxable year ending after the former member (or loss subgroup) ceases to be a member(s). Appropriate adjustments must be made to the limitation based on the value element so apportioned for a short taxable year, carryforward of unused limitation, or any other adjustment required under section 382. The adjustment element apportioned to a former member (or loss subgroup) is treated as an adjustment under section 382(b)(2) or section 382(h), as appropriate, for the first taxable year after the member (or members) ceases to be a member (or members).

(5) *Deemed apportionment when loss group terminates.* If a loss group terminates, to the extent the consolidated section 382 limitation is not apportioned under paragraph (c)(1) of this section, the consolidated section 382 limitation is deemed to be apportioned to the loss subgroup that includes the common parent, or, if there is no loss subgroup that includes the common parent immediately after the loss group terminates, to the common parent. A loss group terminates on the first day of the first taxable year that is a separate return year with respect to each member of the former loss group.

(6) *Appropriate adjustments when former member leaves during the year.* Appropriate adjustments are made to the consolidated section 382 limitation for the consolidated return year during which the former member (or loss subgroup) ceases to be a member(s) to reflect the inclusion of the former member in the loss group for a portion of that year.

(7) *Examples.* The following examples illustrate the principles of this paragraph (c).

Example 1. Consequence of apportionment. (a) L owns all the L1 stock and L1 owns all the L2 stock. The L group has a $200 consolidated net operating loss arising in Year 1 that is carried over to Year 2. At the close of December 31, Year 1, the group has an ownership change under § 1.1502–92T. The ownership change results in a consolidated section 382 limitation of $10 based on the value of the stock of the group. On August 29, Year 2, L1 sells 30 percent of the stock of L2 to A. L2 is apportioned $90 of the group's $200 consolidated net operating loss under § 1.1502–21T(b). L, the common parent, elects to apportion $6 of the consolidated section 382 limitation to L2. The following is a graphic illustration of these facts:

BILLING CODE 4830–01–U

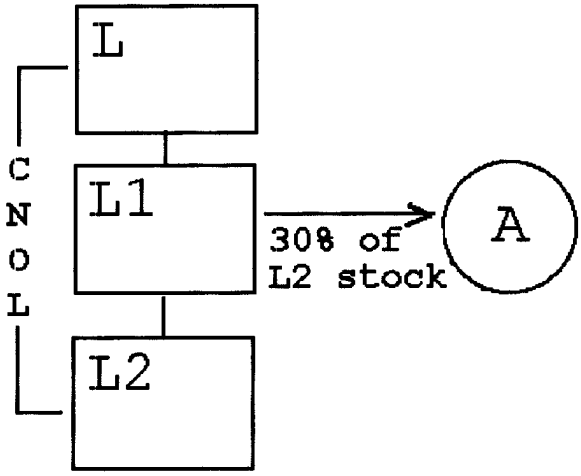

(b) For its separate return years ending after August 29, Year 2 (other than the taxable year ending December 31, Year 2), L2's section 382 limitation with respect to the $90 of the group's net operating loss apportioned to it is $6, adjusted, as appropriate, for any short taxable year, unused section 382 limitation, or other adjustment. For its consolidated return years ending after August 29, Year 2, (other than the year ending December 31, Year 2) the L group's consolidated section 382 limitation with respect to the remaining $110 of pre-change consolidated attribute is $4 ($10 minus the $6 value element apportioned to L2), adjusted, as appropriate, for any short taxable year, unused section 382 limitation, or other adjustment.

(c) For the L group's consolidated return year ending December 31, Year 2, the value element of its consolidated section 382 limitation is increased by $4 (rounded to the nearest dollar), to account for the period during which L2 was a member of the L group ($6, the consolidated section 382 limitation apportioned to L2, times 241/365, the ratio of the number of days during Year 2 that L2 is a member of the group to the number of days in the group's consolidated return year). See paragraph (c)(6) of this section. Therefore, the value element of the consolidated section 382 limitation for Year 2 of the L group is $8 (rounded to the nearest dollar).

(d) The section 382 limitation for L2's short taxable year ending December 31, Year 2, is $2 (rounded to the nearest dollar), which is the amount that bears the same relationship to $6, the value element of the consolidated section 382 limitation apportioned to L2, as the number of days during that short taxable year, 124 days, bears to 365. See § 1.382–4(c).

Example 2. Consequence of no apportionment. The facts are the same as in *Example 1,* except that L does not elect to apportion any portion of the consolidated section 382 limitation to L2. For its separate return years ending after August 29, Year 2, L2's section 382 limitation with respect to the $90 of the group's pre-change consolidated attribute apportioned to L2 is zero under paragraph (b)(2)(ii) of this section. Thus, the $90 consolidated net operating loss apportioned to L2 cannot offset L2's taxable income in any of its separate return years ending after August 29, Year 2. For its consolidated return years ending after August 29, Year 2, the L group's consolidated section 382 limitation with respect to the remaining $110 of pre-change consolidated attribute is $10, adjusted, as appropriate, for any short taxable year, unused section 382 limitation, or other adjustment.

Example 3. Apportionment of adjustment element. The facts are the same as in *Example 1,* except that L2 ceases to be a member of the L group on August 29, Year 3, and the L group has a $4 carryforward of an unused consolidated section 382 limitation (under section 382(b)(2)) to the 1993 consolidated return year.

The carryover of unused limitation increases the consolidated section 382 limitation for the Year 3 consolidated return year from $10 to $14. L may elect to apportion all or any portion of the $10 value element and all or any portion of the $4 adjustment element to L2.

(d) *Rules pertaining to ceasing to be a member of a loss subgroup*—(1) *In general.* A corporation ceases to be a member of a loss subgroup—

(i) On the first day of the first taxable year for which it files a separate return; or

(ii) The first day that it ceases to bear a relationship described in section 1504(a)(1) to the loss subgroup parent (treating for this purpose the loss subgroup parent as the common parent described in section 1504(a)(1)(A)).

(2) *Examples.* The principles of this paragraph (d) are illustrated by the following examples.

Example 1. Basic case. (a) P owns all the L stock, L owns all the L1 stock and L1 owns all the L2 stock. The P group has a consolidated net operating loss arising in Year 1 that is carried over to Year 2. On December 11, Year 2, P sells all the stock of L to corporation M. Each of L, L1, and L2 is apportioned a portion of the Year 1 consolidated net operating loss, and thereafter each joins with M in filing consolidated returns. Under § 1.1502–92T, the L loss subgroup has an ownership change on December 11, Year 2. The L loss subgroup has a subgroup section 382 limitation of $100. The following is a graphic illustration of these facts:

BILLING CODE 4830–01–U

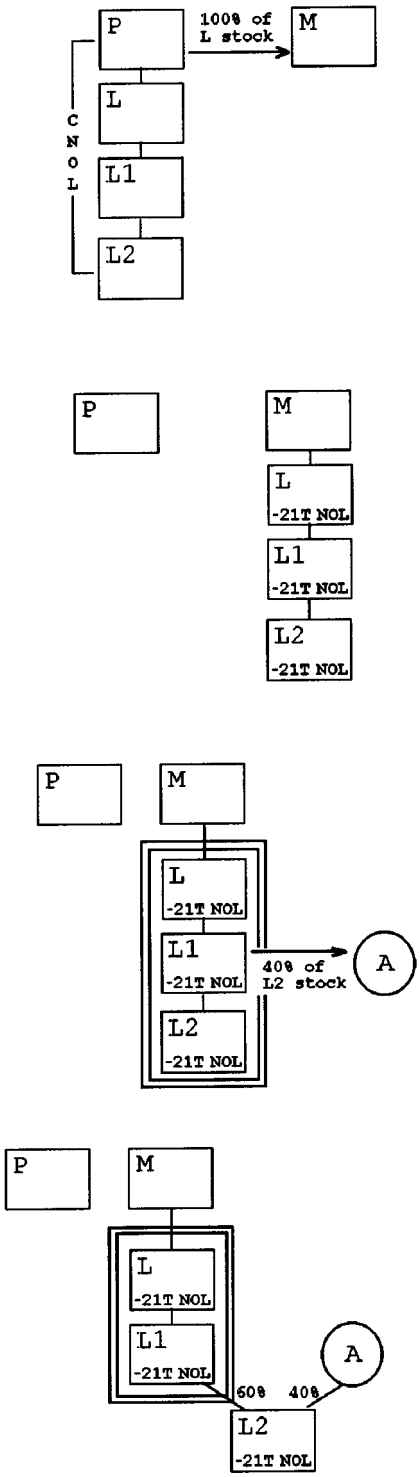

BILLING CODE 4830–01–C

(b) On May 22, Year 3, L1 sells 40 percent of the L2 stock to A. L2 carries over a portion of the P group's net operating loss from Year 1 to its separate return year ending December 31, Year 3. Under paragraph (d)(1) of this section, L2 ceases to be a member of the L loss subgroup on May 22, Year 3, which is both (1) the first day of the first taxable year for which it files a separate return and (2) the day it ceases to bear a relationship described in section 1504(a)(1) to the loss subgroup parent, L. The net operating loss of L2 that is carried over from the P group is treated as a pre-change loss of L2 for its separate return years ending after May 22, Year 3. Under paragraphs (a)(2) and (b)(2) of this section, the separate section 382 limitation with respect to this loss is zero unless M elects to apportion all or a part of the subgroup section 382 limitation of the L loss subgroup to L2.

Example 2. Formation of a new loss subgroup. The facts are the same as in *Example 1,* except that A purchases 40 percent of the L1 stock from L rather than purchasing L2 stock from L1. L1 and L2 file a consolidated return for their first taxable year ending after May 22, Year 3, and each of L1 and L2 carries over a part of the net operating loss of the P group that arose in Year 1. Under paragraph (d)(1) of this section, L1 and L2 cease to be members of the L loss subgroup on May 22, Year 3. The net operating losses carried over from the P group are treated as pre-change subgroup attributes of the loss subgroup composed of L1 and L2. The subgroup section 382 limitation with respect to those losses is zero unless M elects to apportion all or part of the subgroup section 382 limitation of the L loss subgroup to the L1 loss subgroup. The following is a graphic illustration of these facts:

BILLING CODE 4830–01–U

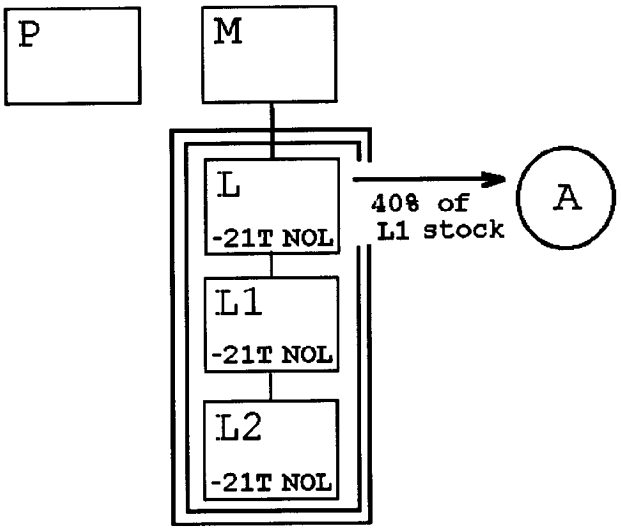

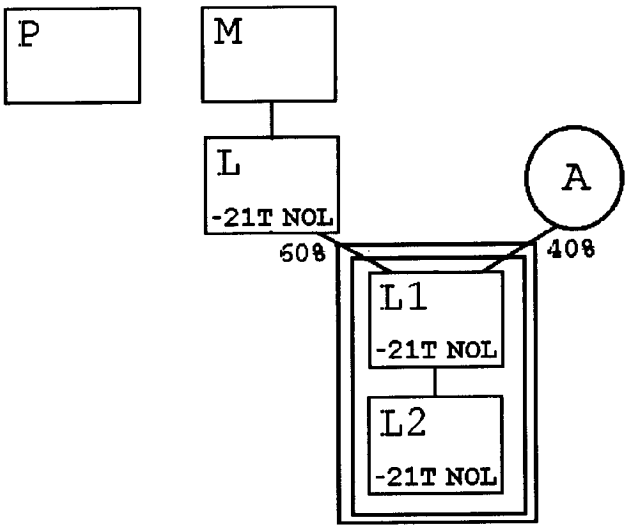

Example 3. Ceasing to bear a section 1504(a)(1) relationship to a loss subgroup parent. (a) A owns all the stock of P, and P owns all the stock of L1 and L2. The P group has a consolidated net operating loss arising in Year 1 that is carried over to Year 3 and Year 4. Corporation M acquires all the stock of P on November 11, Year 3, and P, L1, and L2 thereafter file consolidated returns with M. M's acquisition results in an ownership change of the P loss subgroup under § 1.1502–92T(b)(1)(ii). The following is a graphic illustration of these facts:

BILLING CODE 4830–01–U

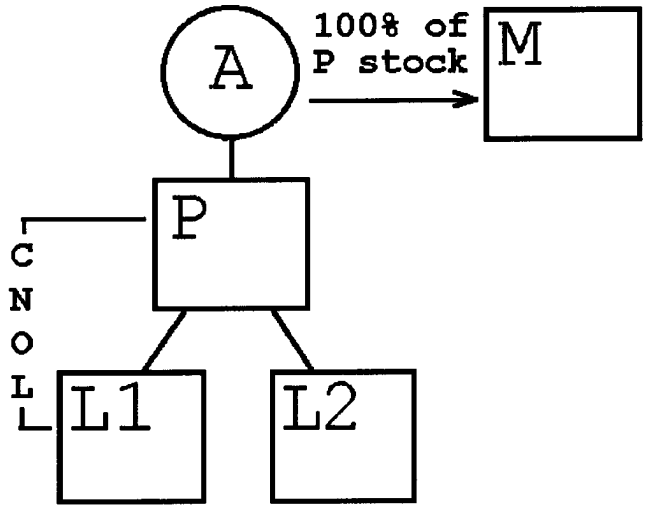

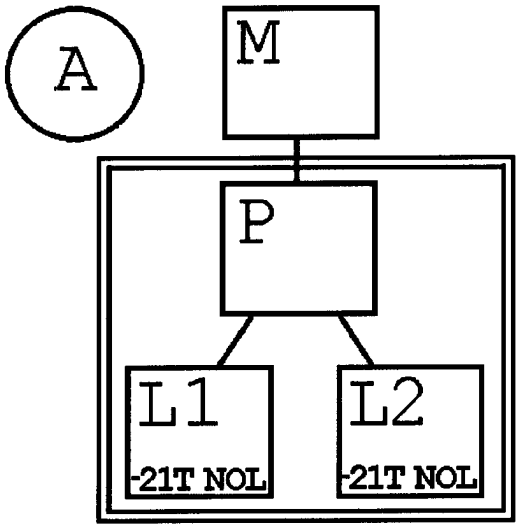

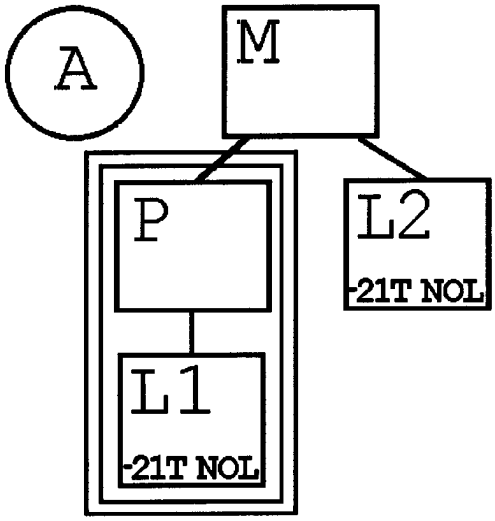

BILLING CODE 4830–01–C

(b) P distributes the L2 stock to M on October 7, Year 4. L2 ceases to be a member of the P loss subgroup on October 7, Year 4, the first day that it ceases to bear the relationship described in section 1504(a)(1) to P, the P loss subgroup parent. See paragraph (d)(1)(ii) of this section. Thus, the section 382 limitation with respect to the pre-change subgroup attributes attributable to L2 is zero except to the extent M elects to apportion all or a part of the subgroup section 382 limitation of the P loss subgroup to L2.

Example 4. Relationship through a successor. The facts are the same as in *Example 3,* except that, instead of P's distributing the stock of L2, L2 merges into L1 on October 7, Year 4. L1 (as successor to L2 in the merger within the meaning of § 1.382–2T(f)(4)) continues to bear a relationship described in section 1504(a)(1) to P, the loss subgroup parent. Thus, L2 does not cease to be a member of the P loss subgroup as a result of the merger.

(e) *Filing the election to apportion*—(1) *Form of the election to apportion.* An election under paragraph (c) of this section must be made by the common parent. The election must be made in the form of the following statement: ''THIS IS AN ELECTION UNDER § 1.1502–95T OF THE INCOME TAX REGULATIONS TO APPORTION ALL OR PART OF THE [insert either CONSOLIDATED SECTION 382 LIMITATION or SUBGROUP SECTION 382 LIMITATION, as appropriate] TO [insert name and E.I.N. of the corporation (or the corporations that compose a new loss subgroup) to which allocation is made]. The declaration must also include the following information, as appropriate—

(i) The date of the ownership change that resulted in the consolidated section 382 limitation (or subgroup section 382 limitation);

(ii) The amount of the consolidated section 382 limitation (or subgroup section 382 limitation) for the taxable year during which the former member (or new loss subgroup) ceases to be a member of the consolidated group (determined without regard to any apportionment under this section;

(iii) The amount of the value element and adjustment element of the consolidated section 382 limitation (or subgroup section 382 limitation) that is apportioned to the former member (or new loss subgroup) pursuant to paragraph (c) of this section; and

(iv) The name and E.I.N. of the common parent making the apportionment.

(2) *Signing of the election.* The election statement must be signed by both the common parent and the former member (or, in the case of a loss subgroup, the common parent and the loss subgroup parent) by persons authorized to sign their respective income tax returns.

(3) *Filing of the election.* The election statement must be filed by the common parent of the group that is apportioning the consolidated section 382 limitation (or the subgroup section 382 limitation) with its income tax return for the taxable year in which the former member (or new loss subgroup) ceases to be a member. The common parent must also deliver a copy of the statement to the former member (or the members of the new loss subgroup) on or before the day the group files its income tax return for the consolidated return year that the former member (or new loss subgroup) ceases to be a member. A copy of the statement must be attached to the first return of the former member (or the first return in which the members of a new loss subgroup join) that is filed after the close of the consolidated return year of the group of which the former member (or the members of a new loss subgroup) ceases to be a member.

(4) *Revocation of election.* An election statement made under paragraph (c) of this section is revocable only with the consent of the Commissioner.

§ 1.1502–96T Miscellaneous rules (temporary).

(a) *End of separate tracking of losses*—(1) *Application.* This paragraph (a) applies to a member (or a loss subgroup) with a net operating loss carryover that arose (or is treated under § 1.1502–21T(c) as arising) in a SRLY (or a net unrealized built-in gain or loss determined at the time that the member (or loss subgroup) becomes a member of the consolidated group if there is—

(i) An ownership change of the member (or loss subgroup in connection with, or after, becoming a member of the group; or

(ii) A period of 5 consecutive years following the day that the member (or loss subgroup) becomes a member of a group during which the member (or loss subgroup) has not had an ownership change.

(2) *Effect of end of separate tracking.* If this paragraph (a) applies with respect to a member (or loss subgroup), then, starting on the day after the earlier of the change date (but not earlier than the day the member (or loss subgroup) becomes a member of the consolidated group) or the last day of the 5 consecutive year period described in paragraph (a)(1)(ii) of this section, the member's net operating loss carryover that arose (or is treated under § 1.1502–21T(c) as arising) in a SRLY, is treated as described in § 1.1502–91T(c)(1)(i). Also, the member's separately computed net unrealized built-in gain or loss is included in the determination whether the group has a net unrealized built-in gain or loss. The preceding sentences also apply for purposes of determining whether there is an ownership change with respect to such attributes following such change date (or earlier day) or 5 consecutive year period. Thus, for example, starting the day after the change date or the end of the 5 consecutive year period—

(i) The consolidated group which includes the new loss member or loss subgroup is no longer required to separately track owner shifts of the stock of the new loss member or loss subgroup parent to determine if an ownership change occurs with respect to the attributes of the new loss member or members included in the loss subgroup;

(ii) The group includes the member's attributes in determining whether it is a loss group under § 1.1502–91T(c);

(iii) There is an ownership change with respect to such attributes only if the group is a loss group and has an ownership change; and

(iv) If the group has an ownership change, such attributes are pre-change consolidated attributes subject to the loss group's consolidated section 382 limitation.

(3) *Continuing effect of end of separate tracking.* As the context may require, a current group determines which of its members are included in a loss subgroup on any testing date by taking into account the application of this section in the former group. See the example in § 1.1502–91T(f)(2).

(4) *Special rule for testing period.* For purposes of determining the beginning of the testing period for a loss group, the member's (or loss subgroup's) net operating loss carryovers (or net unrealized built-in gain or loss) described in paragraph (a)(2) of this section are considered to arise—

(i) in a case described in paragraph (a)(1)(i) of this section, in a taxable year that begins not earlier than the later of the day following the change date or the day that the member becomes a member of the group; and (ii) in a case described in paragraph (a)(1)(ii) of this section, in a taxable year that begins 3 years before the end of the 5 consecutive year period.

(5) *Limits on effects of end of separate tracking.* The rule contained in this paragraph (a) applies solely for purposes of §§ 1.1502–91T through 1.1502–95T and this section (other than paragraph (b)(2)(ii)(B) of this section (relating to the definition of pre-change attributes of a subsidiary)) and § 1.1502–98T, and not for purposes of other provisions of the consolidated return regulations,

including, for example, §§ 1.1502–15T and 1.1502–21T (relating to the consolidated net operating loss deduction). See also paragraph (c) of this section for the continuing effect of an ownership change with respect to pre-change attributes.

(b) *Ownership change of subsidiary*—(1) *Ownership change of a subsidiary because of options or plan or arrangement.* Notwithstanding § 1.1502–92T, a subsidiary may have an ownership change for purposes of section 382 with respect to its attributes which a group or loss subgroup includes in making a determination under § 1.1502–91T(c)(1) (relating to the definition of loss group) or § 1.1502–91T(d) (relating to the definition of loss subgroup). The subsidiary has such an ownership change if it has an ownership change under the principles of § 1.1502–95T(b) and section 382 and the regulations thereunder (determined on a separate entity basis by treating the subsidiary as not being a member of a consolidated group) in the event of—

(i) The deemed exercise under § 1.382–4(d) of an option or options (other than an option with respect to stock of the common parent) held by a person (or persons acting pursuant to a plan or arrangement) to acquire more than 20 percent of the stock of the subsidiary; or

(ii) An increase by 1 or more 5-percent shareholders, acting pursuant to a plan or arrangement to avoid an ownership change of a subsidiary, in their percentage ownership interest in the subsidiary by more than 50 percentage points during the testing period of the subsidiary through the acquisition (or deemed acquisition pursuant to § 1.382–4(d)) of ownership interests in the subsidiary and in higher-tier members with respect to the subsidiary.

(2) *Effect of the ownership change*—(i) *In general.* If a subsidiary has an ownership change under paragraph (b)(1) of this section, the amount of consolidated taxable income for any post-change year that may be offset by the pre-change losses of the subsidiary shall not exceed the section 382 limitation for the subsidiary. For purposes of this limitation, the value of the subsidiary is determined solely by reference to the value of the subsidiary's stock.

(ii) *Pre-change losses.* The pre-change losses of a subsidiary are—

(A) Its allocable part of any consolidated net operating loss which is attributable to it under § 1.1502–21T(b) (determined on the last day of the consolidated return year that includes the change date) that is not carried back and absorbed in a taxable year prior to the year including the change date;

(B) Its net operating loss carryovers that arose (or are treated under § 1.1502–21T(c) as having arisen) in a SRLY; and

(C) Its recognized built-in loss with respect to its separately computed net unrealized built-in loss, if any, determined on the change date.

(3) *Coordination with §§ 1.1502–91T, 1.1502–92T, and 1.1502–94T.* If an increase in percentage ownership interest causes an ownership change with respect to an attribute under this paragraph (b) and under § 1.1502–92T on the same day, the ownership change is considered to occur only under § 1.1502–92T and not under this paragraph (b). See § 1.1502–94T for anti-duplication rules relating to value.

(4) *Example.* The following example illustrates paragraph (b)(1)(ii) of this section.

Example. Plan to avoid an ownership change of a subsidiary. (a) L owns all the stock of L1, L1 owns all the stock of L2, L2 owns all the stock of L3, and L3 owns all the stock of L4. The L group has a consolidated net operating loss arising in Year 1 that is carried over to Year 2. L has assets other than its L1 stock with a value of $900. L1, L2, and L3 own no assets other than their L2, L3, and L4 stock. L4 has assets with a value of $100. During Year 2, A, B, C, and D, acting pursuant to a plan to avoid an ownership change of L4, acquire the following ownership interests in the members of the L loss group: (A) on September 11, Year 2, A acquires 20 percent of the L1 stock from L and B acquires 20 percent of the L2 stock from L1; and (B) on September 20, Year 2, C acquires 20 percent of the stock of L3 from L2 and D acquires 20 percent of the stock of L4 from L3. The following is a graphic illustration of these facts:

BILLING CODE 4830–01–U

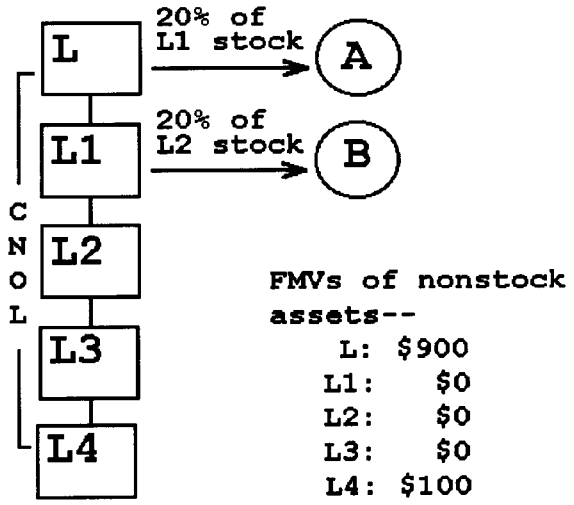

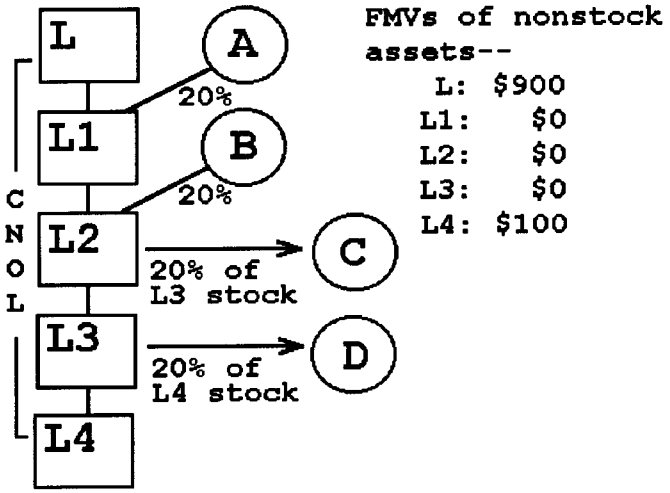

BILLING CODE 4830–01–C

(b) The acquisitions by A, B, C, and D pursuant to the plan have increased their respective percentage ownership interests in L4 by approximately 10, 13, 16, and 20 percentage points, for a total of approximately 59 percentage points during the testing period. This more than 50 percentage point increase in the percentage ownership interest in L4 causes an ownership change of L4 under paragraph (b)(2) of this section.

(c) *Continuing effect of an ownership change.* A loss corporation (or loss subgroup) that is subject to a limitation under section 382 with respect to its pre-change losses continues to be subject to the limitation regardless of whether it becomes a member or ceases to be a member of a consolidated group. See § 1.382–5T(d) (relating to successive ownership changes and absorption of a section 382 limitation).

§ 1.1502–97T Special rules under section 382 for members under the jurisdiction of a court in a title 11 or similar case (temporary). [Reserved]

§ 1.1502–98T Coordination with section 383 (temporary).

The rules contained in §§ 1.1502–91T through 1.1502–96T also apply for purposes of section 383, with appropriate adjustments to reflect that section 383 applies to credits and net capital losses. Similarly, in the case of net capital losses, general business credits, and excess foreign taxes that are pre-change attributes, § 1.383–1 applies the principles of §§ 1.1502–91T through 1.1502–96T. For example, if a loss group has an ownership change under § 1.1502–92T and has a carryover of unused general business credits from a pre-change consolidated return year to a post-change consolidated return year, the amount of the group's regular tax liability for the post-change year that can be offset by the carryover cannot exceed the consolidated section 383 credit limitation for that post-change year, determined by applying the principles of §§ 1.383–1(c)(6) and 1.1502–93T (relating to the computation of the consolidated section 382 limitation).

§ 1.1502–99T Effective dates (temporary).

(a) *Effective date.* Sections 1.1502–91T through 1.1502–96T and 1.1502–98T apply to any testing date on or after January 1, 1997. Sections 1.1502–94T through 1.1502–96T also apply on any date on or after January 1, 1997, on which a corporation becomes a member of a group or on which a corporation ceases to be a member of a loss group (or a loss subgroup).

(b) *Testing period may include a period beginning before January 1, 1997.* A testing period for purposes of §§ 1.1502–91T through 1.1502–96T and 1.1502–98T may include a period beginning before January 1, 1997. Thus, for example, in applying § 1.1502–92T(b)(1)(i) (relating to the determination of an ownership change of a loss group), the determination of the lowest percentage ownership interest of any 5-percent shareholder of the common parent during a testing period ending on a testing date occurring on or after January 1, 1997, takes into account the period beginning before January 1, 1997, except to the extent that the period is more than 3 years before the testing date or is otherwise before the beginning of the testing period. See § 1.1502–92T(b)(1).

(c) *Transition rules*—(1) *Methods permitted*—(i) *In general.* For the period ending before January 1, 1997, a consolidated group is permitted to use any method described in paragraph (c)(2) of this section which is consistently applied to determine if an ownership change occurred with respect to a consolidated net operating loss, a net operating loss carryover (including net operating loss carryovers arising in SRLYs), or a net unrealized built-in loss. If an ownership change occurred during that period, the group is also permitted to use any method described in paragraph (c)(2) of this section which is consistently applied to compute the amount of the section 382 limitation that applies to limit the use of taxable income in any post-change year ending before, on, or after January 1, 1997. The preceding sentence does not preclude the imposition of an additional, lesser limitation due to a subsequent ownership change nor, except as provided in paragraph (c)(1)(iii) of this section, does it permit the beginning of a new testing period for the loss group.

(ii) *Adjustments to offset excess limitation.* If an ownership change occurred during the period ending before January 1, 1997, and a method described in paragraph (c)(2) of this section was not used for a post-change year, the members (or group) must reduce the section 382 limitation for post-change years for which an income tax return is filed after January 1, 1997, to offset, as quickly as possible, the effects of any section 382 limitation that members took into account in excess of the amount that would have been allowable under §§ 1.1502–91T through 1.1502–96T and 1.1502–98T.

(iii) *Coordination with effective date.* Notwithstanding that a group may have used a method described in paragraph (c)(2)(ii) or (iii) of this section for the period before January 1, 1997, §§ 1.1502–91T through 1.1502–96T and 1.1502–98T apply to any testing date occurring on or after January 1, 1997, for purposes of determining whether there is an ownership change with respect to any losses and, if so, the collateral consequences. Any ownership change of a member other than the common parent pursuant to a method described in paragraph (c)(2)(ii) or (iii) of this section does not cause a new testing period of the loss group to begin for purposes of applying § 1.1502–92T on or after January 1, 1997.

(2) *Permitted methods.* The methods described in this paragraph (c)(2) are:

(i) A method that does not materially differ from the rules in §§ 1.1502–91T through 1.1502–96T and 1.1502–98T (other than those in § 1.1502–95T(c) (relating to the apportionment of a section 382 limitation) as they would apply to a corporation that ceases to be a member of the group before January 1, 1997). As the context requires, the method must treat references to rules in current regulations as references to rules in regulations generally effective for taxable years before January 1, 1997. Thus, for example, the taxpayer must treat a reference to § 1.382–4(d) (relating to options) as a reference to § 1.382–2T(h)(4) for any testing date to which § 1.382–2T(h)(4) applies. Similarly, a reference to § 1.1502–21T(c) may be a reference to § 1.1502–21A(c), as appropriate. Furthermore, the method must treat all corporations that were affiliated on January 1, 1987, and continuously thereafter as having met the 5 consecutive year requirement of § 1.1502–91T(d)(2)(i) on any day before January 1, 1992, on which the determination of net unrealized built-in gain or loss of a loss subgroup is made;

(ii) A reasonable application of the rules in section 382 and the regulations thereunder applied to each member on a separate entity basis, treating each member's allocable part of a consolidated net operating loss which is attributable to it under § 1.1502–21T(b) as a net operating loss of that member and applying rules similar to § 1.382–8T to avoid duplication of value in computing the section 382 limitation for the member (see § 1.382–8T(h) (relating to the effective date and transition rules regarding controlled groups)); or

(iii) A method approved by the Commissioner upon application by the common parent.

(d) *Amended returns.* A group may file an amended return in connection with an ownership change occurring before January 1, 1997, to modify the amount of a section 382 limitation with respect to a consolidated net operating loss, a net operating loss carryover (including net operating loss carryovers arising in SRLYs), or a recognized built-in loss (or gain) only if it files amended returns:

(1) For the earliest taxable year ending after December 31, 1986, in which it had an ownership change, if any, under § 1.1502–92T;

(2) For all subsequent taxable years for which returns have already been filed as of the date of the amended return;

(3) The modification with respect to all members for all taxable years ending in 1987 and thereafter complies with §§ 1.1502–91T through 1.1502–96T and 1.1502–98T; and

(4) The amended return(s) permitted by the applicable statute of limitations is/are filed before March 26, 1997.

(e) *Section 383.* This section also applies for the purposes of section 383, with appropriate adjustments to reflect that section 383 applies to credits and net capital losses.

PART 602—OMB CONTROL NUMBERS UNDER THE PAPERWORK REDUCTION ACT

Par. 3. The authority citation for part 602 continues to read in part as follows:

Authority: 26 U.S.C. 7805.

Par. 4. In § 602.101, paragraph (c) is amended by adding an entry in numerical order to the table to read as follows:

§ 602.101 OMB Control numbers.

* * * * *

(c) * * *

CFR part or section where identified or described	Current OMB control No.
* * * * *	
1.1502–95T	1545–1218
* * * * *	

Margaret Milner Richardson,
Commissioner of Internal Revenue.

Approved: May 31, 1996.

Leslie Samuels,
Assistant Secretary of the Treasury.

[FR Doc. 96–15824 Filed 6–26–96; 8:45 am]

BILLING CODE 4830–01–U

26 CFR Parts 301 and 602

[TD 8680]

RIN 1545–AU41

Extensions of Time to Make Elections

AGENCY: Internal Revenue Service (IRS), Treasury.

ACTION: Temporary regulations.

SUMMARY: This document contains temporary regulations concerning extensions of time for making certain elections under the Internal Revenue Code (Code). The regulations provide the standards that the Commissioner will use to grant taxpayers extensions of time for making these elections. The text of these temporary regulations also serves as the text of the proposed regulations set forth in the notice of proposed rulemaking on this subject in the Proposed Rules section of this issue of the Federal Register.

DATES: These regulations are effective June 27, 1996.

For dates of applicability, see § 301.9100–1T(h) of these regulations.

FOR FURTHER INFORMATION CONTACT: Robert A. Testoff at (202) 622–4960 (not a toll-free number).

SUPPLEMENTARY INFORMATION:

Paperwork Reduction Act

These regulations are being issued without prior notice and public procedure pursuant to the Administrative Procedure Act (5 U.S.C. 553). For this reason, the collection of information contained in these regulations has been reviewed and, pending receipt and evaluation of public comments, approved by the Office of Management and Budget under control number 1545–1488. Responses to this collection of information are required to obtain an extension of time for making an election.

An agency may not conduct or sponsor, and a person is not required to respond to, a collection of information unless the collection of information displays a valid control number.

For further information concerning this collection of information, where to submit comments on the collection of information and the accuracy of the estimated burden, and suggestions for reducing this burden, please refer to the preamble to the cross-referencing notice of proposed rulemaking published in the Proposed Rules section of this issue of the Federal Register.

Books or records relating to a collection of information must be retained as long as their contents may become material in the administration of any internal revenue law. Generally, tax returns and tax return information are confidential, as required by 26 U.S.C. 6103.

Background

This document contains temporary regulations amending the Regulations on Procedure and Administration (26 CFR part 301) concerning extensions of time for making certain elections. The regulations provide the standards that the Commissioner will use to grant taxpayers extensions of time for making these elections. These standards provide relief to taxpayers who reasonably and in good faith fail to make a timely election when granting relief will not prejudice the interests of the government. The regulations provide a means by which taxpayers can be in the same position they would have been in had they made their elections in a timely fashion.

Explanation of Provisions

These temporary regulations provide the standards the Commissioner will use to determine whether to grant an extension of time to make an election when the deadline for making the election is prescribed by regulation, revenue ruling, revenue procedure, notice, or announcement published in the Federal Register or the Internal Revenue Bulletin (regulatory election). Under section 6081(a), these regulations also provide an automatic extension of time to make an election when the deadline for making the election is prescribed by statute (statutory election) and the deadline for making the election is the due date of the return or the due date of the return including extensions. These regulations adopt and revise the standards for relief provided in Rev. Proc. 92–85, 1992–2 C.B. 490.

Automatic Extensions

Rev. Proc. 92–85 provides an automatic 12-month extension for certain regulatory elections listed in Appendix A of that revenue procedure. The temporary regulations continue the automatic 12-month extension and update the list of eligible regulatory elections.

Rev. Proc. 92–85 also provides an automatic 6-month extension for statutory elections when the deadline for making the election is prescribed as the due date of the return or the due date of the return including extensions. The temporary regulations expand the automatic 6-month extension to include regulatory elections.

Other Extensions

Rev. Proc. 92–85 provides relief for certain regulatory elections that do not qualify for relief under the automatic extensions. Rev. Proc. 92–85 requires a taxpayer to demonstrate that (1) it acted reasonably and in good faith and (2) granting relief will not prejudice the interests of the government. The temporary regulations continue to provide extensions for such regulatory elections upon a showing of reasonable action and good faith and no prejudice to the interests of the government.

The temporary regulations adopt the standards for reasonable action and good faith in Rev. Proc. 92–85. The regulations provide that a taxpayer is deemed to have acted reasonably and in good faith if: (1) the taxpayer applies for relief before the failure to make the regulatory election is discovered by the IRS; (2) the taxpayer inadvertently failed to make the election because of intervening events beyond its control; (3) the taxpayer failed to make the election because after exercising reasonable diligence the taxpayer was unaware of the necessity for the election; (4) the taxpayer reasonably relied on written advice of the IRS; or (5) the taxpayer relied on a qualified tax professional, including a professional employed by the taxpayer, and the professional failed to make or advise the taxpayer to make the election. However, a taxpayer is deemed to have not acted reasonably and in good faith if: (1) the taxpayer is requesting relief for an election to alter a return position for which an accuracy-related penalty could have been imposed under section 6662; (2) the taxpayer was fully informed of the required election and related tax consequences and chose not to file the election; or (3) the taxpayer uses hindsight in requesting relief.

The temporary regulations adopt the standards for prejudice to the interests of the government in Rev. Proc. 92–85. The regulations provide that the interests of the government are deemed to be prejudiced if granting relief would result in a taxpayer having a lower tax liability than the taxpayer would have had if the regulatory election had been timely made. In addition, the interests of the government are ordinarily deemed to be prejudiced if the tax year in which the election should have been made or any affected tax years are closed by the statute of limitations.

Accounting Method and Period Elections

Rev. Proc. 92–85 provides limited relief (ordinarily not to exceed 90 days from the deadline for filing Form 3115, Application for Change in Accounting Method) for requests to change an accounting method subject to the procedure described in § 1.446–1(e)(3)(i) (requiring the advance written consent of the Commissioner). The temporary regulations continue this limited relief. Rev. Proc. 92–85 provides an automatic 12-month extension for the election to use the last-in, first-out (LIFO) inventory method under section 472 and also provides relief for the section 472

election beyond the automatic 12-month extension. Rev. Proc. 92–85 is otherwise inapplicable to accounting method regulatory elections, except for three specific elections listed in Appendix B of that revenue procedure.

The temporary regulations provide relief for all accounting method regulatory elections. For example, relief will now be available for elections under sections 197 (amortization of goodwill and certain other intangibles) and 468A (special rules for nuclear decommissioning costs).

The temporary regulations provide additional rules regarding what constitutes prejudice to the interests of the government for accounting method regulatory elections. The temporary regulations provide that the interests of the government are deemed to be prejudiced except in unusual and compelling circumstances if: (1) the election requires an adjustment under section 481(a); (2) the taxpayer is under examination, requests relief to change from an impermissible method of accounting, and granting relief will provide the taxpayer a more favorable method of accounting or more favorable terms and conditions than the taxpayer would receive if the change is made as part of the examination; or (3) the election provides a more favorable method of accounting or more favorable terms and conditions if the election is made by a certain date or taxable year.

Rev. Proc. 92–85 provides an automatic 12-month extension for elections to use other than the required taxable year under section 444. Rev. Proc. 92–85 also provides limited relief (ordinarily not to exceed 90 days from the deadline for filing Form 1128, Application to Adopt, Change, or Retain a Tax Year) for accounting period regulatory elections subject to Rev. Proc. 87–32, 1987–2 C.B. 396. Rev. Proc. 92–85 is otherwise inapplicable to accounting period regulatory elections. The temporary regulations extend the limited relief for elections subject to Rev. Proc. 87–32 to all other accounting period regulatory elections except for the section 444 election, and provide relief for the section 444 election beyond the automatic 12-month extension.

Effect on Other Documents

Rev. Proc. 92–85, 1992–2 C.B. 490, as modified and clarified by Rev. Proc. 93–28, 1993–2 C.B. 344, is obsolete as of June 27, 1996.

Rev. Proc. 92–20, 1992–1 C.B. 685, is modified as of June 27, 1996 to the extent that the provisions of this regulation apply to applications for relief with respect to requests to change an accounting method subject to the procedures of Rev. Proc. 92–20.

Rev. Proc. 87–32, 1987–2 C.B. 396, is modified as of June 27, 1996 to the extent that the provisions of this regulation apply to applications for relief with respect to requests to change an accounting period subject to the procedures of Rev. Proc. 87–32.

Special Analyses

It has been determined that this Treasury decision is not a significant regulatory action as defined in EO 12866. Therefore, a regulatory assessment is not required. It has also been determined that section 553(b) of the Administrative Procedure Act (5 U.S.C. chapter 5) and the Regulatory Flexibility Act (5 U.S.C. chapter 6) do not apply to these regulations, and, therefore, a Regulatory Flexibility Analysis is not required. Pursuant to section 7805(f) of the Internal Revenue Code, these temporary regulations will be submitted to the Chief Counsel for Advocacy of the Small Business Administration for comment on their impact on small businesses.

Drafting Information

The principal author of these regulations is Robert A. Testoff of the Office of Assistant Chief Counsel (Income Tax and Accounting). However, other personnel from the IRS and Treasury Department participated in their development.

List of Subjects

26 CFR Part 301

Employment taxes, Estate taxes, Excise taxes, Gift taxes, Income taxes, Penalties, Reporting and recordkeeping requirements.

26 CFR Part 602

Reporting and recordkeeping requirements.

Adoption of Amendments to the Regulations

Accordingly, 26 CFR parts 301 and 602 are amended as follows:

PART 301—PROCEDURE AND ADMINISTRATION

Paragraph 1. The authority citation for part 301 is amended by adding entries in numerical order to read as follows:

Authority: 26 U.S.C. 7805 * * *

Section 301.9100–1T also issued under 26 U.S.C. 6081;

Section 301.9100–2T also issued under 26 U.S.C. 6081;

Section 301.9100–3T also issued under 26 U.S.C. 6081; * * *

PAR. 2. Sections 301.9100–1T through 301.9100–3T are added to read as follows:

§ 301.9100–1T Extensions of time to make elections (temporary).

(a)–(c) [Reserved].

(d) *Introduction.* The regulations under this section and §§ 301.9100–2T through 301.9100–3T provide the standards the Commissioner will use to determine whether to grant an extension of time to make a regulatory election. The regulations under this section and §§ 301.9100–2T through 301.9100–3T also provide an automatic extension of time to make certain statutory elections. An extension of time is available for elections that a taxpayer is otherwise eligible to make and the granting of an extension of time is not a determination that the taxpayer is otherwise eligible to make the election. Section 301.9100–2T provides automatic extensions of time for making regulatory and statutory elections when the deadline for making the election is the due date of the return or the due date of the return including extensions. Section 301.9100–3T provides extensions of time for making regulatory elections that do not meet the requirements of § 301.9100–2T.

(e) *Terms.* The following terms have the meanings provided below:

Election includes an application for relief in respect of tax; a request to adopt, change, or retain an accounting method or accounting period; but does not include an application for an extension of time for filing a return under section 6081.

Regulatory election means an election whose deadline is prescribed by a regulation published in the Federal Register, or a revenue ruling, revenue procedure, notice, or announcement published in the Internal Revenue Bulletin.

Statutory election means an election whose deadline is prescribed by statute.

Taxpayer means any person within the meaning of section 7701(a)(1).

(f) *General standards for relief.* The Commissioner in the Commissioner's discretion may grant a reasonable extension of time to make a regulatory election, or a statutory election (but no more than 6 months except in the case of a taxpayer who is abroad), under all subtitles of the Internal Revenue Code except subtitles E, G, H, and I, provided the taxpayer demonstrates to the satisfaction of the Commissioner that——

(1) The taxpayer acted reasonably and in good faith; and

(2) Granting relief will not prejudice the interests of the government.

(g) *Exceptions.* Notwithstanding the provisions of paragraph (f) of this section, an extension of time will not be granted—

(1) For elections under section 4980A(f)(5);

(2) For elections required to be made prior to November 20, 1970, in the case of an election——

(i) Required to be made in or with the taxpayer's original income tax return;

(ii) Required to be exercised by filing a claim for credit or refund, unless the election is required to be exercised on or before a date that precedes the date of expiration of the period of limitations provided in section 6511;

(iii) Required to be filed in a petition to the Tax Court;

(iv) To change a previous election;

(v) To change an accounting method as described in §§ 1.77–1 of this chapter and 1.446–1 of this chapter;

(vi) To change an accounting period as described in § 1.442–1 of this chapter; or

(vii) To change the method of treating bad debts as described in § 1.166–1 of this chapter; or

(3) For elections that are expressly excepted from relief or where alternative relief is provided by a statute, a regulation published in the Federal Register, or a revenue ruling, revenue procedure, notice, or announcement published in the Internal Revenue Bulletin.

(h) *Effective dates.* In general, this section and §§ 301.9100–2T through 301.9100–3T are effective for all requests for relief being considered by the IRS on June 27, 1996 and for all requests for relief submitted on or after June 27, 1996. However, the automatic 12-month extension and the automatic 6-month extension provided in § 301.9100–2T are effective for elections whose due dates are on or after June 27, 1996.

§ 301.9100–2T Automatic extensions (temporary).

(a) *Automatic 12-month extension*—(1) *In general.* An automatic extension of 12 months from the original deadline for making a regulatory election is granted to make elections described in paragraph (a)(2) of this section provided the taxpayer takes corrective action as defined in paragraph (c) of this section within that 12-month extension period.

(2) *Elections eligible for automatic 12-month extension.* The following regulatory elections are eligible for the automatic 12-month extension described in paragraph (a)(1) of this section——

(i) The election to use other than the required taxable year under section 444;

(ii) The election to use the last-in, first-out (LIFO) inventory method under section 472;

(iii) The 15-month rule for filing an exemption application for a section 501(c)(9), 501(c)(17), or 501(c)(20) organization under section 505;

(iv) The 15-month rule for filing an exemption application for a section 501(c)(3) organization under section 508;

(v) The election to be treated as a homeowners association under section 528;

(vi) The election to adjust basis on partnership transfers and distributions under section 754;

(vii) The estate tax election to specially value qualified real property (where the IRS has not yet begun an examination of the filed return) under section 2032A(d)(1);

(viii) The chapter 14 gift tax election to treat a qualified payment right as other than a qualified payment under section 2701(c)(3)(C)(i); and

(ix) The chapter 14 gift tax election to treat any distribution right as a qualified payment under section 2701(c)(3)(C)(ii).

(b) *Automatic 6-month extension.* An automatic extension of 6 months from the due date of a return excluding extensions is granted to make regulatory or statutory elections whose deadlines are prescribed as the due date of the return or the due date of the return including extensions in the case of a taxpayer that timely filed its return for the year the election should have been made, provided the taxpayer takes corrective action as defined in paragraph (c) of this section within that 6-month extension period. This extension does not apply, however, to regulatory or statutory elections that must be made by the due date of the return excluding extensions.

(c) *Corrective action.* For purposes of this section, *corrective action* means filing an original or an amended return for the year the regulatory or statutory election should have been made and attaching the appropriate form or statement for making the election. For those elections not required to be filed with a return, corrective action means taking the steps required to file the election in accordance with the statute, the regulation published in the Federal Register, or the revenue ruling, revenue procedure, notice, or announcement published in the Internal Revenue Bulletin. Taxpayers who make an election under an automatic extension (and all taxpayers whose tax liability would be affected by the election) must report their income in a manner that is consistent with the election and comply with all other requirements for making the election for the year the election should have been made and for all affected years; otherwise, the Service may invalidate the election.

(d) *Procedural requirements.* Any return, statement of election, or other form of filing that must be made to obtain an automatic extension must provide the following statement at the top of the document: ''FILED PURSUANT TO § 301.9100–2T''. Any filing made to obtain an automatic extension must be sent to the same address that the filing to make the election would have been sent had the filing been timely made. No request for a letter ruling is required to obtain an automatic extension. Accordingly, user fees do not apply to taxpayers taking corrective action to obtain an automatic extension.

(e) The following example illustrates the rules of this section:

Example. Taxpayer A fails to make a certain election when filing A's 1996 income tax return on March 17, 1997, the due date of the return. This election does not affect the tax liability of any other taxpayer. The applicable regulation requires that the election be made by attaching the appropriate form to a timely filed return including extensions. In accordance with paragraphs (b) and (c) of this section, A may make the regulatory election by filing an amended return with the appropriate form by September 15, 1997 (6 months from the March 17, 1997, due date).

§ 301.9100–3T Other extensions (temporary).

(a) *In general.* Requests for extensions of time for regulatory elections that do not meet the requirements of § 301.9100–2T must be made under the rules of this section. Requests for relief subject to this section will be granted when the taxpayer provides the evidence (including affidavits described in paragraph (e) of this section) to establish that the taxpayer acted reasonably and in good faith, and granting relief will not prejudice the interests of the government.

(b) *Reasonable action and good faith*—(1) *In general.* Except as provided in paragraphs (b)(3)(i) through (iii) of this section, a taxpayer is deemed to have acted reasonably and in good faith if the taxpayer—

(i) Requests relief under this section before the failure to make the regulatory election is discovered by the IRS;

(ii) Inadvertently failed to make the election because of intervening events beyond the taxpayer's control;

(iii) Failed to make the election because, after exercising reasonable diligence (taking into account the taxpayer's experience and the complexity of the return or issue), the

taxpayer was unaware of the necessity for the election;

(iv) Reasonably relied on the written advice of the IRS; or

(v) Reasonably relied on a qualified tax professional, including a tax professional employed by the taxpayer, and the tax professional failed to make, or advise the taxpayer to make, the election.

(2) *Reasonable reliance on a qualified tax professional.* For purposes of this paragraph (b), a taxpayer will not be considered to have reasonably relied on a qualified tax professional if the taxpayer knew or should have known that the professional was not—

(i) Competent to render advice on the regulatory election; or

(ii) Aware of all relevant facts.

(3) *Taxpayer deemed to have not acted reasonably or in good faith.* For purposes of this paragraph (b), a taxpayer is deemed to have not acted reasonably and in good faith if the taxpayer—

(i) Seeks to alter a return position for which an accuracy-related penalty has been or could be imposed under section 6662 at the time the taxpayer requests relief (taking into account any qualified amended return filed within the meaning of § 1.6664–2(c)(3)) of this chapter and the new position requires or permits a regulatory election for which relief is requested;

(ii) Was fully informed of the required election and related tax consequences, but chose not to file the election; or

(iii) Uses hindsight in requesting relief. If specific facts have changed since the original deadline for making the election that make the election advantageous to a taxpayer, the IRS will not ordinarily grant relief. In such a case, the IRS will grant relief only when the taxpayer provides strong proof that the taxpayer's decision to seek relief did not involve hindsight.

(c) *Prejudice to the interests of the government*—(1) *In general*—(i) *Lower tax liability.* The interests of the government are prejudiced if granting relief would result in a taxpayer having a lower tax liability in the aggregate for all years to which the regulatory election applies than the taxpayer would have had if the election had been timely made (taking into account the time value of money). Similarly, if the tax consequences of more than one taxpayer are affected by the election, the government's interests are prejudiced if extending the time for making the election may result in the affected taxpayers, in the aggregate, having a lower tax liability than if the election had been timely made.

(ii) *Closed years.* The interests of the government are ordinarily prejudiced if the tax year in which the regulatory election should have been made or any tax years that would have been affected by the election had it been timely made are closed by the period of limitations on assessment under section 6501(a) before the taxpayer's receipt of a ruling granting relief under this section. The IRS may condition a grant of relief on the taxpayer providing the IRS with a statement from an independent auditor (other than an auditor providing an affidavit pursuant to paragraph (e)(3) of this section) certifying that the requirements of paragraph (c)(1)(i) of this section are satisfied.

(2) *Special rules for accounting method regulatory elections.* The interests of the government are deemed to be prejudiced except in unusual and compelling circumstances if the accounting method regulatory election is—

(i) Subject to the procedure described in § 1.446–1(e)(3)(i) of this chapter (requiring the advance written consent of the Commissioner), and the request for relief under this section is filed more than 90 days after the deadline for filing the Form 3115, Application for Change in Accounting Method;

(ii) Not an election described in paragraph (c)(2)(i) of this section and requires an adjustment under section 481(a) (or would require an adjustment under section 481(a) if the taxpayer changed to the method of accounting for which relief is requested in a taxable year subsequent to the taxable year the election should have been made);

(iii) Not an election described in paragraph (c)(2)(i) of this section, the taxpayer is under examination and requests relief under this section to change from an impermissible method of accounting, and granting relief will provide the taxpayer a more favorable method of accounting or more favorable terms and conditions than the taxpayer would receive if the change from the impermissible method is made as part of the examination; or

(iv) Not an election described in paragraph (c)(2)(i) of this section and the election provides a more favorable method of accounting or more favorable terms and conditions if the election is made by a certain date or taxable year.

(3) *Special rules for accounting period regulatory elections.* The interests of the government are deemed to be prejudiced except in unusual and compelling circumstances if an election is an accounting period regulatory election (other than the election to use other than the required taxable year under section 444) and the request for relief is filed more than 90 days after the deadline for filing the Form 1128, Application to Adopt, Change, or Retain a Tax Year (or other required statement).

(d) *Effect of amended returns*—(1) *Second examination under section 7605(b).* Taxpayers requesting and receiving an extension of time under this section waive any objections to a second examination under section 7605(b) for the issue(s) that is the subject of the relief request and any correlative adjustments.

(2) *Suspension of the period of limitations under section 6501(a).* A request for relief under this section does not suspend the period of limitations on assessment under section 6501(a). Thus, for relief to be granted, the IRS may require the taxpayer to consent under section 6501(c)(4) to an extension of the period of limitations on assessment for the tax year in which the regulatory election should have been made and any tax years that would have been affected by the election had it been timely made.

(e) *Procedural requirements*—(1) *In general.* Requests for relief under this section must provide evidence that satisfies the requirements in paragraphs (b) and (c) of this section, and must provide additional information as required by this paragraph (e).

(2) *Affidavit and declaration from taxpayer.* The taxpayer, or the individual who acts on behalf of the taxpayer with respect to tax matters, must submit a detailed affidavit describing the events that led to the failure to make a valid regulatory election and to the discovery of the failure. When the taxpayer relied on a qualified tax professional for advice, the taxpayer's affidavit must describe the engagement and responsibilities of the professional as well as the extent to which the taxpayer relied on the professional. The affidavit must be accompanied by a dated declaration, signed by the taxpayer, which states: ''Under penalties of perjury, I declare that, to the best of my knowledge and belief, the facts presented herein are true, correct, and complete.'' The individual who signs for an entity must have personal knowledge of the facts and circumstances at issue.

(3) *Affidavits and declarations from other parties.* The taxpayer must submit detailed affidavits from the individuals having knowledge or information about the events that led to the failure to make a valid regulatory election and to the discovery of the failure. These individuals must include the taxpayer's income tax return preparer, any individual (including an employee of the taxpayer) who made a substantial

contribution to the preparation of the return, and any accountant or attorney, knowledgeable in tax matters, who advised the taxpayer with regard to the election. An affidavit must describe the engagement and responsibilities of the individual as well as the advice that the individual provided to the taxpayer. Each affidavit must include the name, current address, and taxpayer identification number of the individual, and be accompanied by a dated declaration, signed by the individual, which states: ''Under penalties of perjury, I declare that, to the best of my knowledge and belief, the facts presented herein are true, correct, and complete.''

(4) *Other Information.* The request for relief filed under this section must also contain the following information—

(i) The taxpayer must state whether the taxpayer's return(s) for the tax year in which the regulatory election should have been made or any tax years that would have been affected by the election had it been timely made is being examined by a district director, or is being considered by an appeals office or a federal court. The taxpayer must notify the IRS office considering the request for relief if the IRS starts an examination of any such return while the taxpayer's request for relief is pending;

(ii) The taxpayer must state when the applicable return, form, or statement used to make the election was required to be filed and when it was actually filed;

(iii) The taxpayer must submit a copy of any documents that refer to the election;

(iv) When requested, the taxpayer must submit a copy of the taxpayer's income tax return for any taxable year for which the taxpayer requests an extension and any return affected by the election; and

(v) When applicable, the taxpayer must submit a copy of the income tax returns of other taxpayers affected by the election.

(5) *Filing instructions.* A request for relief under this section is a request for a letter ruling. Requests for relief should be submitted in accordance with the applicable procedures for requests for a letter ruling and must be accompanied by the applicable user fee.

(f) *Examples.* The following examples illustrate the provisions of this section:

Example 1. Taxpayer discovers own error. Taxpayer A prepares A's 1996 income tax return. A is unaware that a particular regulatory election is available to report a transaction in a particular manner. A files the 1996 return without making the election and reporting the transaction in a different manner. In 1998, A hires a qualified tax professional to prepare A's 1998 return. The professional discovers that A did not make the election. A promptly files for relief in accordance with this section. Assuming paragraphs (b)(3)(i) through (iii) of this section do not apply, A is deemed to have acted reasonably and in good faith.

Example 2. Reliance on qualified tax professional. Taxpayer B hires a qualified tax professional to advise B on preparing B's 1996 income tax return and provides the professional with all the information requested. The professional fails to advise B that a regulatory election is necessary in order for B to report income on B's 1996 return in a particular manner. Nevertheless, B reports this income in a manner that is consistent with having made the election. In 1999, during the examination of the 1996 return by the IRS, the examining agent discovers that the election has not been filed. B promptly files for relief in accordance with this section, including attaching an affidavit from B's professional stating that the professional failed to advise B that the election was necessary. Assuming paragraphs (b)(3)(i) through (iii) of this section do not apply, B is deemed to have acted reasonably and in good faith.

Example 3. Accuracy-related penalty. Taxpayer C reports income on its 1996 income tax return in a manner that contravenes a statutory provision. C was aware of the statutory provision that prohibited the manner in which C reported this income, but did not provide adequate disclosure of the return position within the meaning of § 1.6662–3(c) of this chapter. In 1999, during the examination of the 1996 return, the IRS raises an issue regarding the reporting of this income on C's return. C requests relief under this section to elect an alternative method of reporting the income. Under paragraph (b)(3)(i) of this section, C is deemed to have not acted reasonably and in good faith because C seeks to alter a return position for which an accuracy-related penalty could be imposed under section 6662.

Example 4. Election not requiring adjustment under section 481(a). Taxpayer D prepares D's 1996 income tax return. D is unaware that a particular accounting method regulatory election is available. D files the 1996 return using another method of accounting. In 1998, D hires a qualified tax professional to prepare D's 1998 return. The professional discovers that D did not make the election. D promptly files for relief in accordance with this section. Assume the applicable regulation provides that the election does not require an adjustment under section 481(a) and the election is not subject to the procedure described in § 1.446–1(e)(3)(i) of this chapter. Further assume that if D were granted an extension of time to make the election, D would pay no less tax than if the election had been timely made. Under paragraph (c) of this section, the interests of the government are not deemed to be prejudiced.

Example 5. Election requiring adjustment under section 481(a). The facts are the same as in Example 4 of this paragraph (f) except that the applicable regulation provides that the election requires an adjustment under section 481(a). Under paragraph (c)(2)(ii) of this section, the interests of the government are deemed to be prejudiced except in unusual or compelling circumstances.

Example 6. Under examination. A regulation permits an automatic change from an impermissible method of accounting on a cut-off basis. Any change to this method made as part of an examination is made with a section 481(a) adjustment. Taxpayer E reports income on E's 1996 income tax return using the impermissible method of accounting. In 1999, during the examination of the 1996 return by the IRS, the examining agent questions the propriety of E's method of accounting. E requests relief under this section to make the change pursuant to the regulation for 1996. E will receive less favorable terms and conditions if the change in method of accounting is made with a section 481(a) adjustment by the examining agent than if the change is made on a cut-off basis pursuant to the regulation. Under paragraph (c)(2)(iii) of this section, the interests of the government are deemed to be prejudiced except in unusual and compelling circumstances

PART 602—OMB CONTROL NUMBERS UNDER THE PAPERWORK REDUCTION ACT

Par. 3. The authority citation for part 602 continues to read as follows:

Authority: 26 U.S.C. 7805.

Par. 4. Section 602.101(c) is amended by adding the following entries in numerical order to the table:

§ 602.101 OMB Control numbers

* * * * *

(c) * * *

CFR part or section where identified and described	Current OMB control number
* * * * *	
§ 301.9100–2T	1545–1488
§ 301.9100–3T	1545–1488
* * * * *	

Margaret Milner Richardson,

Commissioner of Internal Revenue.

Approved:

Donald C. Lubick,

Assistant Secretary of the Treasury.

[FR Doc. 96–16376 Filed 6–26–96; 8:45 am]

BILLING CODE 4830–01–U

DEPARTMENT OF TRANSPORTATION

Coast Guard

33 CFR Part 100

[CGD01–96–057]

RIN 2115–AE46

Special Local Regulation: Fireworks Displays Within the First Coast Guard District

AGENCY: Coast Guard, DOT.

ACTION: Notice of implementation.

SUMMARY: This document provides notice of the dates and time of the special local regulations contained in 33 CFR 100.114, ''Fireworks Displays within the First Coast Guard District.'' All vessels will be restricted from entering the area of navigable water within a 500 yard radius of the fireworks launch platform for each of the events listed in the table below. Implementation of these regulations is necessary to control vessel traffic within the regulated area to ensure to safety of spectators.

EFFECTIVE DATE: The regulations in 33 CFR 100.114 are effective from one hour before the scheduled start of the event until thirty minutes after the last firework is exploded for each event listed in the table below. The events are listed alphabetically with their corresponding number listed in Table 1 of the special local regulation, 33 CFR 100.114.

FOR FURTHER INFORMATION CONTACT: Lieutenant Commander James B. Donovan, Office of Search and Rescue, First Coast Guard District, (617) 223–8278.

Discussion of Notice

This notice implements the special local regulations in 33 CFR 100.114 (61 FR 32329; June 24, 1996). All vessels are prohibited from entering a 500 yard radius of navigable water surrounding the launch platform used in each fireworks display listed below.

Table 1—Fireworks Displays

3. Bangor Fireworks
Date: July 4, 1996
Time: 9:00 p.m. to 12:00 a.m.
Location: Bangor/Brewer waterfront, ME

4. Bar Harbor Fireworks
Date: July 4, 1996
Time: 9:00 p.m. to 12:00 a.m.
Location: Bar Harbor/Bar Island, ME

6. Belfast Fireworks
Date: July 20, 1996
Time: 9:00 p.m. to 11:00 p.m.
Location: Belfast Bay, ME

7. Boston Harborfest Fireworks
Date: July 3, 1996
Time: 9:30 p.m. to 11:00 p.m.
Location: Boston Inner Harbor, Boston, MA

8. Boys Harbor Fireworks Extravaganza, East Hampton, NY
Date: July 13, 1996
Time: 9:00 p.m. to 11:00 p.m.
Location:Three Mile Harbor, East Hampton, NY,
Lat: 41°01′05″ N Long: 072°11′55″ W (NAD 1983)

11. Bristol 4th of July Fireworks
Date: July 4, 1996
Time: 9:30 p.m. to 10:00 p.m.
Location: Bristol Harbor, Bristol, RI

13. City of New Bedford Fireworks
Date: July 7, 1996
Time: 9:00 p.m. to 10:00 p.m.
Location: New Bedford Harbor, New Bedford, MA

14. City of Norwalk Fireworks
Date: July 3, 1996
Time: 9:15 p.m. to 10:15 p.m.
Location: Calf Pasture Beach, Long Island Sound, Norwalk, CT
Lat: 41°05′10″ N Long: 073°23′20″ W (NAD 1983)

16. Devon Yacht Club Fireworks
Date: July 6, 1996
Rain Date: July 7, 1996
Time: 9:00 p.m. to 9:30 p.m.
Location: Devon Yacht Club, Amagansett, NY,
Lat: 40°59′30″ N Long: 072°06′00″ W (NAD 1983)

17. Edgartown Fireworks
Date: July 5, 1996
Time: 9:00 p.m. to 9:30 p.m.
Location: Edgartown Harbor, Edgartown, MA

18. Fairfield Aerial Fireworks
Date: July 6, 1996
Time: 9:00 p.m. to 10:30 p.m.
Location: Jennings Beach,Long Island Sound, Fairfield, CT

19. Fall River Celebrates America Fireworks
Date: August 10, 1996
Time: 9:15 p.m.to 10:00 p.m.
Location: Taunton River, vicinity of buoy #17, Fall River, MA

20. Falmouth Fireworks
Date: July 4, 1996
Time: 9:00 p.m. to 10:00 p.m.
Location: Falmouth Harbor, .25 nm east of buoy #16, Falmouth, MA

21. Fireworks on the Navesink
Date: July 3, 1996
Time: 9:00 p.m.to 10:00 p.m.
Location: Navesink River, 4 nm WSW Oceanic Bridge, Red Bank, NJ

26. Hartford Riverfront Regatta
Date: July 6, 1996
Time: 9:30 p.m. to 10:00 p.m.
Location: Connecticut River, Hartford, CT
Lat: 41°45′24.6″ N Long: 072°39′31.8″ W (NAD 1983)

27. Hempstead Fireworks
Date: July 7, 1996
Time: 9:00 p.m. to 10:00 p.m.
Location: Point Lookout, Hempstead, NY

28. Jones Beach State Park Fireworks
Date: July 4, 1996
Time: 9:30 p.m. to 10:00 p.m.
Location: Fishing Pier, Jones Beach State Park, Wantagh, NY

29. Koch Industries Fireworks
Date: September 2, 1996
Rain Date: September 3, 1996
Time: 9:15 p.m. to 10:00 p.m.
Location: Shinnecock Bay, South Hampton, NY, Lat: 40°51′5″ N
Long: 072°17′00″ W (NAD 1983)

30. Marion Fireworks
Date: July 4, 1996
Time: 8:00 p.m. to 10:00 p.m.
Location: Silver Shell Beach, Marion, MA

31. Middletown Fireworks
Date: July 4, 1996
Rain Date: July 5/6, 1996
Time: 9:15 p.m. to 10:00 p.m.
Location: Connecuticut River, Middletown, CT,
Lat: 41°33′21.6″ N Long: 073°38′18″ W (NAD 1983)

33. Norwich American Wharf Fireworks
Date: July 5, 1996
Rain Date: July 12, 1996
Time: 9:00 p.m. to 10:00 p.m.
Location: Norwich Harbor, Norwich, CT, Lat: 41°30′16″ N
Long: 072°05′45″ W (NAD 1983)

34. Norwich Harbor Day Fireworks
Date: July 5, 1996
Rain Date: July 12, 1996
Time: 9:00 p.m. to 10:00 p.m.
Location: Norwich Harbor, off American arf Marina, Norwich, Ct, Lat: 41°31′22″ N Long: 072°04′50″ W (NAD 1983)

35. Oaks Bluff Fireworks
Date: August 23, 1996
Time: 8:30 p.m. to 10:00 p.m.
Location: Oaks Bluff Beach, Oaks Bluff, MA

36. Old Lyme Fireworks, Old Lyme, CT
Date: July 6, 1996
Rain Date: July 7, 1996
Time: 9:00 p.m. to 10:00 p.m.
Location: Sound View Beach, Long Island Sound, Old Lyme, CT,
Lat: 41°16′46″ N Long: 072°16′25″ W (NAD 1983)

37. Onset Fireworks
Date: July 6, 1996
Time: 9:15 p.m. to 10:00 p.m.
Location: Onset Harbor, Onset, MA

38. Oyster Harbor Club Fourth of July Festival
Date: July 4, 1996
Time: 6:00 p.m. to 10:00 p.m.
Location: Tim's Cove, North Bay, Osterville, RI

39. Salute to Summer
Date: August 23, 1996
Time: 9:00 p.m. to 9:30 p.m.
Location: Narragansett Bay, East Passage, off Coasters
Harbor Island, Newport, RI

41. Staten Island's 4th of July
Date: July 4, 1996
Time: 8:30 p.m. to 9:30 p.m.
Location: Raritan Bay, vicinity of federal anchorages 44 and
45, Ward Point Bend, NY/NJ

42. Stamford Fireworks
Date: July 5, 1996
Rain Date: July 6, 1996
Time: 9:00 p.m. to 11:00 p.m.
Location: Westcott Cove, Stamford, CT, Lat: 41°02′09″ N
Long: 073°30′57″ W (NAD 1983)

43. Stratford Fireworks
Date: July 3, 1996
Time: 9:00 p.m. to 10:00 p.m.
Location: Short Beach, Stratford, CT, Lat: 41°09′30″ N
Long: 073°06′2″ W (NAD 1983)

44. Subfest Fireworks
Date: July 4, 1996
Rain Date: July 5, 1996
Time: 9:30 p.m. to 9:50 p.m.
Location: Thames River, Groton, CT, Lat: 41°23′13″ N Long:
072°05′15″ W (NAD 1983)

45. Summer Music Fireworks
Date: July 20, Aug 1, and Aug 24, 1996
Time: 10:00 p.m. to 11:00 p.m.
Location: Niantic River, Harkness Park, Waterford, CT, Lat: 41°18′00″ N Long: 072°06′40″ W (NAD 1983)

46. Taste of Italy
Date: September 7, 1996
Rain Date: September 8, 1996
Time: 8:00 p.m. to 9:00 p.m.
Location: Norwich Harbor, off Norwich Marina, Norwich, CT,
Lat: 41°31′20″ N Long: 072°04′83″ W (NAD 1983)

47. Thames River Fireworks
Date: July 13, 1996
Time: 9:30 p.m. to 10:30 p.m.
Location: Thames River, off Electric Boat, Groton, CT, Lat: 41°21′00″ N Long: 072°05′20″ W (NAD 1983)

48. Tiverton Waterfront Festival
Date: June 30, 1996
Time: 10:00 p.m. to 10:30 p.m.
Location: Grinnel's Beach, Sakonnet River, Tiverton, RI

49. Town of Babylon Fireworks
Date: July 4, 1996
Rain Date: July 5, 1996
Time: 9:00 p.m. to 9:30 p.m.
Location: Nezeras Island, Babylon, NY, Lat: 40°40′30″ N
Long: 073°19′30″ W (NAD 1983)

50. Town of Barnstable Fireworks
Date: July 4, 1996
Time: 9:00 p.m. to 10:00 p.m.
Location: Dunbar Point/Kalmus Beach, Barnstable, MA

52. Walsh's Fireworks
Date: July 4, 1996
Time: 9:00 p.m. to 11:00 p.m.
Location: Union River Bay, ME

53. Wellfleet Fireworks
Date: July 6, 1996
Time: 8:00 p.m. to 11:00 p.m.
Location: Indian Neck Jetty, Wellfleet, MA

54. Westport P.A.L. Fireworks, Westport, CT
Date: July 3, 1996
Rain Date: July 5, 1996
Time: 10:00 p.m. to 10:30 p.m.
Location: Compo Beach, Westport, CT

55. Weymouth 4th of July Fireworks
Date: July 3, 1996
Time: 8:00 p.m. to 11:00 p.m.
Location: Weymouth Fore River, Weymouth, MA

56. Yampol Family Fireworks
Date: July 6, 1996
Time: 8:00 p.m. to 11:00 p.m.
Location: Barons Cove, Sag Harbor, NY

Dated: June 21, 1996.

J.L. Linnon,

Rear Admiral, U.S. Coast Guard Commander, First Coast Guard District.

[FR Doc. 96–16490 Filed 6–26–96; 8:45 am]

BILLING CODE 4910–14–M

ENVIRONMENTAL PROTECTION AGENCY

40 CFR Part 52

[GA–30–3–9615a; FRL–5519–2]

Approval and Promulgation of Implementation Plans; Approval of Revisions to the State Implementation Plan; Georgia

AGENCY: Environmental Protection Agency (EPA).

ACTION: Direct final rule.

SUMMARY: This action approves a revision to the Georgia State Implementation Plan (SIP) submitted by the Georgia Department of Natural Resources, Environmental Protection Division (GA EPD) on November 15, 1994, for the purpose of deleting the volatile organic compound (VOC) reasonably available control technology (RACT) rule for Perchloroethylene Dry Cleaners. This SIP revision is consistent with requirements of the Clean Air Act as amended in 1990 (CAA).

DATES: This final rule is effective August 26, 1996 unless adverse or critical comments are received by July 29, 1996. If the effective date is delayed, timely notice will be published in the Federal Register.

ADDRESSES: Written comments on this action should be addressed to Scott M. Martin at the EPA Regional Office listed below.

Copies of the documents relative to this action are available for public inspection during normal business hours at the following locations. The interested persons wanting to examine these documents should make an appointment with the appropriate office at least 24 hours before the visiting day.

Air and Radiation Docket and Information Center (Air Docket 6102), U.S. Environmental Protection Agency, 401 M Street, SW, Washington, DC 20460.

Environmental Protection Agency, Region 4 Air Programs Branch, 345 Courtland Street, NE, Atlanta, Georgia 30365.

Air Protection Branch, Georgia Environmental Protection Division, Georgia Department of Natural Resources, 4244 International Parkway, Suite 120, Atlanta, Georgia 30354.

FOR FURTHER INFORMATION CONTACT: Scott M. Martin, Regulatory Planning and Development Section, Air Programs Branch, Air, Pesticides & Toxics Management Division, Region 4 Environmental Protection Agency, 345 Courtland Street, NE, Atlanta, Georgia 30365. The telephone number is 404/347–3555, X4216. Reference file GA–30–3–9615.

SUPPLEMENTARY INFORMATION: On November 15, 1994, the State of Georgia through the Georgia Environmental Protection Division submitted SIP revisions to EPA Region 4. This submittal contains changes pursuant to requirements of part D of Title I of the CAA with regard to nonattainment areas.

Specifically, Georgia submitted, and EPA is approving, the deletion of Subsection 391–3–1–.02(2)(ww), Perchloroethylene Dry Cleaners, in its entirety.

This revision is pursuant to the publication of a Federal Register notice on February 7, 1996, (61 FR 4588) in which EPA adds perchloroethylene, also known as tetrachloroethylene, to the list of compounds excluded from the definition of VOC. The effective date of this rule is March 8, 1996.

Perchloroethylene is a solvent commonly used in dry cleaning, maskant operations, and degreasing operations. This rule results in a more accurate assessment of ozone formation potential and will assist States in avoiding exceedances for the ozone health standard. The rule does this by causing control efforts to focus on compounds which are actual ozone precursors, rather than giving credit for control of a compound which has negligible photochemical reactivity. Perchloroethylene will continue to be regulated as a hazardous air pollutant (HAP) under Section 112 of the CAA.

Final Action

EPA is approving the above referenced revision to the Georgia SIP. The EPA is publishing this action without a prior proposal for approval because the Agency views this as a noncontroversial amendment and anticipates no adverse comments. However, in a separate document in this Federal Register publication, the EPA is proposing to approve the SIP revisions should adverse or critical comments be filed. This action will be effective on August 26, 1996 unless, by July 29, 1996, adverse or critical comments are received.

If the EPA receives such comments, this action will be withdrawn before the effective date by publishing a subsequent document that will

withdraw the final action. All public comments received will then be addressed in a subsequent final rule based on the separate proposed rule. The EPA will not institute a second comment period on this action. Any parties interested in commenting on this action should do so at this time. If no such comments are received, the public is advised that this action will be effective August 26, 1996.

Under Section 307(b)(1) of the CAA, 42 U.S.C. 7607(b)(1), petitions for judicial review of this action must be filed in the United States Court of Appeals for the appropriate circuit by August 26, 1996. Filing a petition for reconsideration by the Administrator of this final rule does not affect the finality of this rule for purposes of judicial review nor does it extend the time within which a petition for judicial review may be filed, and shall not postpone the effectiveness of such rule or action. This action may not be challenged later in proceedings to enforce its requirements. (See Section 307(b)(2) of the CAA, 42 U.S.C. 7607(b)(2)).

This action has been classified as a Table 3 action for signature by the Regional Administrator under the procedures published in the Federal Register on January 19, 1989 (54 FR 2214–2225), as revised by a July 10, 1995, memorandum from Mary Nichols, Assistant Administrator for Air and Radiation. The Office of Management and Budget (OMB) has exempted this regulatory action from E.O. 12866 review.

Nothing in this action shall be construed as permitting or allowing or establishing a precedent for any future request for a revision to any state implementation plan. Each request for revision to the state implementation plan shall be considered separately in light of specific technical, economic, and environmental factors and in relation to relevant statutory and regulatory requirements.

Under the Regulatory Flexibility Act, 5 U.S.C. 600 *et seq.*, EPA must prepare a regulatory flexibility analysis assessing the impact of any proposed or final rule on small entities. 5 U.S.C. 603 and 604. Alternatively, EPA may certify that the rule will not have a significant impact on a substantial number of small entities. Small entities include small businesses, small not-for-profit enterprises, and government entities with jurisdiction over populations of less than 50,000.

SIP approvals under Section 110 and subchapter I, part D of the CAA do not create any new requirements, but simply approve requirements that the State is already imposing. Therefore, because the Federal SIP-approval does not impose any new requirements, I certify that it does not have a significant impact on any small entities affected. Moreover, due to the nature of the Federal-state relationship under the CAA, preparation of a regulatory flexibility analysis would constitute Federal inquiry into the economic reasonableness of state action. The CAA forbids EPA to base its actions concerning SIPs on such grounds. *Union Electric Co.* v. *U.S. E.P.A.*, 427 U.S. 246, 256–66 (S.Ct. 1976); 42 U.S.C. 7410(a)(2) and 7410(k)(3).

Under Sections 202, 203, and 205 of the Unfunded Mandates Reform Act of 1995 (''Unfunded Mandates Act''), signed into law on March 22, 1995, EPA must undertake various actions in association with proposed or final rules that include a Federal mandate that may result in estimated costs of $100 million or more to the private sector, or to State, local, or tribal governments in the aggregate.

Through submission of this state implementation plan or plan revision, the State and any affected local or tribal governments have elected to adopt the revisions provided for under part D of Title I of the CAA. These rules may bind State, local and tribal governments to perform certain actions and also require the private sector to perform certain duties. To the extent that the rules being approved by this action will impose no new requirements, since such sources are already subject to these regulations under State law. Accordingly, no additional costs to State, local, or tribal governments, or to the private sector, result from this action, and therefore there will be no significant impact on a substantial number of small entities. EPA has also determined that this final action does not include a mandate that may result in estimated costs of $100 million or more to State, local, or tribal governments in the aggregate or to the private sector.

List of Subjects in 40 CFR Part 52

Environmental protection, Air pollution control, Hydrocarbons, Incorporation by reference, Intergovernmental relations, Ozone, Reporting and recordkeeping requirements.

Dated: April 19, 1996.

A. Stanley Meiburg,

Acting Regional Administrator.

Part 52 of chapter I, title 40, *Code of Federal Regulations,* is amended as follows:

PART 52—[AMENDED]

1. The authority citation for part 52 continues to read as follows:

Authority: 42.U.S.C. 7401–7671(q).

Subpart L—Georgia

2. Section 52.570 is amended by revising subparagraph (c)(37)(i)(A) to read as follows:

§ 52.570 Identification of plan.

* * * * *

(c) * * *

(37) * * *

(i) * * *

(A) The following Rules of the Georgia Department of Natural Resources, Chapter 391–3–1, Air Quality Control, became State effective on January 9, 1991.

391–3–1–.01(jjj);
391–3–1–.02(2)(a)4.;
391–3–1–.02(2)(t);
391–3–1–.02(2)(u)2.(i) and (iii);
391–3–1–.02(2)(v)2.(i) and (iii);
391–3–1–.02(2)(w)2.(i) and (iii);
391–3–1–.02(2)(x)2.(i), (iii), and (x)3.(v);
391–3–1–.02(2)(y)2.(i) and (iii);
391–3–1–.02(2)(z)2.(i) and (iii);
391–3–1–.02(2)(aa)2.(i) and (iii);
391–3–1–.02(2)(bb)1.(ii);
391–3–1–.02(2)(cc);
391–3–1–.02(2)(ee)1.(iii);
391–3–1–.02(2)(ff)2.(ii)(V) and 3.(iii)(III);
391–3–1–.02(2)(ii)4.(i) and (iii);
391–3–1–.02(2)(jj)2.(i) and (iii);
391–3–1–.02(2)(mm)1.(i), (ii), and (iii);
391–3–1–.02(2)(pp);
391–3–1–.02(2)(qq);
391–3–1–.0292)(rr);
391–3–1–.02(2)(ss);
391–3–1–.02(3)(a);
391–3–1–.02(6)(a)3.

* * * * *

[FR Doc. 96–16343 Filed 6–26–96; 8:45 am]

BILLING CODE 6560–50–P

---

40 CFR Part 721

[OPPTS–50601H; FRL–5371–7]

Cyclohexanecarbonitrile, 1,3,3-trimethyl-5-oxo-; Revocation of a Significant New Use Rule

AGENCY: Environmental Protection Agency (EPA).

ACTION: Final rule.

SUMMARY: EPA is revoking a significant new use rule (SNUR) promulgated under section 5(a)(2) of the Toxic Substances Control Act (TSCA) for cyclohexanecarbonitrile, 1,3,3-trimethyl-5-oxo- based on receipt of new data. Based on the data the Agency determined that it could not support a

finding that activities described in the PMN may result in a significant risk.

EFFECTIVE DATE: The effective date of this rule is July 29, 1996.

FOR FURTHER INFORMATION CONTACT: Susan B. Hazen, Director, Environmental Assistance Division (7408), Office of Pollution Prevention and Toxics, Environmental Protection Agency, Rm. E–543A, 401 M St., SW., Washington, DC 20460, Telephone: (202) 554–1404, TDD: (202) 554–0551; e-mail: TSCA-Hotline@epamail.epa.gov.

SUPPLEMENTARY INFORMATION: In the Federal Register of September 23, 1992 (57 FR 44050), EPA issued a SNUR (FRL–4001–2) establishing significant new uses for cyclohexanecarbonitrile, 1,3,3-trimethyl-5-oxo-. Because of additional data EPA has received for this substance, EPA is revoking this SNUR.

I. Background

The Agency proposed the revocation of the SNUR for this substance in the Federal Register of September 13, 1995 (60 FR 47531) (FRL–4926–1). The background and reasons for the revocation of the SNUR are set forth in the preamble to the proposed revocation. The Agency received no public comment concerning the proposed revocation. As a result EPA is revoking this SNUR.

II. Background and Rationale for Final SNUR Revocation of the Rule

During review of the premanufacture notice (PMN) submitted for the chemical substance that is the subject of this final SNUR revocation, EPA concluded that regulation was warranted under section 5(e) of TSCA pending the development of information sufficient to make a reasoned evaluation of the environmental effects of the substance, and that the substance is expected to be produced in substantial quantities and there may be significant or substantial human exposure. EPA identified the tests necessary to make a reasoned evaluation of the risks posed by the substance to the human health. Based on these findings, a section 5(e) consent order was negotiated with the PMN submitter and a SNUR was promulgated.

EPA reviewed testing conducted by the PMN submitter pursuant to the consent order for the substance and determined that the information available was sufficient to make a reasoned evaluation of the health effects of the substance. EPA has determined that it could not support a finding that activities described in the PMN may result in a significant risk. The final revocation of SNUR provisions for the substance designated herein is consistent with the revocation of the section 5(e) order.

In light of the above, EPA is finalizing a revocation of SNUR provisions for this chemical substance. When this revocation becomes final, EPA will no longer require notice of any company's intent to manufacture, import, or process this substance. In addition, export notification under section 12(b) of TSCA will no longer be required.

III. Rulemaking Record

The record for the rule which EPA is revoking was established at OPPTS–50601 (P–90–1358). This record includes information considered by the Agency in developing the rule and includes the test data that formed the basis for this finalization.

A public version of the record, without any Confidential Business Information, is available in the OPPT Non-Confidential Information Center (NCIC) from 12 p.m. to 4 p.m., Monday through Friday, except legal holidays. The TSCA NCIC is located in the Northeast Mall Basement Rm. B–607, 401 M St., SW., Washington, DC.

IV. Regulatory Assessment Requirements

EPA is revoking the requirements of the rule. Any costs or burdens associated with the rule will also be eliminated when the rule is revoked. Therefore, EPA finds that no costs or burdens must be assessed under Executive Order 12866, the Regulatory Flexibility Act (5 U.S.C. 605(b)), or the Paperwork Reduction Act (44 U.S.C. 3501 *et seq.*).

List of Subjects in 40 CFR Part 721

Environmental protection, Chemicals, Hazardous materials, Reporting and recordkeeping requirements, Significant new uses.

Dated: June 18, 1996.

Charles M. Auer,

Director, Chemical Control Division, Office of Pollution Prevention and Toxics.

Therefore, 40 CFR part 721 is amended to read as follows:

PART 721—[AMENDED]

1. The authority citation for part 721 continues to read as follows:

Authority: 15 U.S.C. 2604, 2607, and 2625(c).

§ 721.2225 [Removed]

2. By removing § 721.2225.

[FR Doc. 96–16337 Filed 6–26–96; 8:45 am]

BILLING CODE 6560–50–F

40 CFR Part 721

[OPPTS–50608D; FRL–5372–1]

Ethane, 1,1,1 Trifluoro-; Revocation of a Significant New Use Rule

AGENCY: Environmental Protection Agency (EPA).

ACTION: Final rule.

SUMMARY: EPA is revoking a significant new use rule (SNUR) promulgated under section 5(a)(2) of the Toxic Substances Control Act (TSCA) for ethane, 1,1,1 trifluoro, based on receipt of new data. Based on the data the Agency determined that it could not support a finding that activities described in the PMN may result in a significant risk.

EFFECTIVE DATE: The effective date of this rule is July 29, 1996.

FOR FURTHER INFORMATION CONTACT: Susan B. Hazen, Director, Environmental Assistance Division (7408), Office of Pollution Prevention and Toxics, Environmental Protection Agency, Rm. E–543A, 401 M St., SW., Washington, DC 20460, Telephone: (202) 554–1404, TDD: (202) 554–0551; e-mail: TSCA-Hotline@epamail.epa.gov.

SUPPLEMENTARY INFORMATION: In the Federal Register of June 8, 1993 (58 FR 32228), EPA issued a SNUR (FRL–4172–3) establishing significant new uses for ethane, 1,1,1 trifluoro-. Because of additional data EPA has received for this substance, EPA is revoking this SNUR.

I. Background

The Agency proposed the revocation of the SNUR for this substance in the Federal Register of September 13, 1995 (60 FR 47533) (FRL–4911–5). The background and reasons for the revocation of the SNUR are set forth in the preamble to the proposed revocation. The Agency received no public comment concerning the proposed revocation. As a result EPA is revoking this SNUR.

II. Background and Rationale for Final SNUR Revocation of the Rule

During review of the premanufacture notice (PMN) submitted for the chemical substance that is the subject of this final SNUR revocation, EPA concluded that regulation was warranted under section 5(e) of TSCA pending the development of information sufficient to make a reasoned evaluation of the health effects of the substance, and that the substance is expected to be produced in substantial quantities and there may be significant or substantial human exposure. EPA identified the

tests necessary to make a reasoned evaluation of the risks posed by the substance to the human health. Based on these findings, a section 5(e) consent order was negotiated with the PMN submitter and a SNUR was promulgated. EPA reviewed testing conducted by the PMN submitter pursuant to the consent order for the substance and determined that the information available was sufficient to make a reasoned evaluation of the health effects of the substance. EPA has determined that it could not support a finding that activities described in the PMN may result in a significant risk. The final revocation of SNUR provisions for the substance designated herein is consistent with the revocation of the section 5(e) order.

In light of the above, EPA is finalizing a revocation of SNUR provisions for this chemical substance. When this revocation becomes final, EPA will no longer require notice of any person's intent to manufacture, import, or process this substance. In addition, export notification under section 12(b) of TSCA will no longer be required.

III. Rulemaking Record

The record for the rule which EPA is revoking was established at OPPTS–50608 (P–92–341). This record includes information considered by the Agency in developing the rule and includes the test data that formed the basis for this finalization.

A public version of the record, without any Confidential Business Information, is available in the OPPT Non-Confidential Information Center (NCIC) from 12 p.m. to 4 p.m., Monday through Friday, except legal holidays. The TSCA NCIC is located in the Northeast Mall Basement Rm. B–607, 401 M St. SW., Washington, DC.

IV. Regulatory Assessment Requirements

EPA is revoking the requirements of the rule. Any costs or burdens associated with the rule will also be eliminated when the rule is revoked. Therefore, EPA finds that no costs or burdens must be assessed under Executive Order 12866, the Regulatory Flexibility Act (5 U.S.C. 605(b)), or the Paperwork Reduction Act (44 U.S.C. 3501 *et seq.*).

List of Subjects in 40 CFR Part 721

Environmental protection, Chemicals, Hazardous materials, Reporting and recordkeeping requirements, Significant new uses.

Dated: June 18, 1996.

Charles M. Auer,

Director, Chemical Control Division, Office of Pollution Prevention and Toxics.

Therefore, 40 CFR part 721 is amended to read as follows:

PART 721—[AMENDED]

1. The authority citation for part 721 continues to read as follows:

Authority: 15 U.S.C. 2604, 2607, and 2625(c).

§ 721.3254 [Removed]

2. By removing § 721.3254.

[FR Doc. 96–16336 Filed 6–26–96; 8:45 am]

BILLING CODE 6560–50–F

---

40 CFR Part 799

[OPPT–42030K; FRL–5363–2]

Withdrawal of Final Test Rule for Mesityl Oxide

AGENCY: Environmental Protection Agency (EPA).

ACTION: Final rule.

SUMMARY: EPA is withdrawing the final test rule for mesityl oxide (MO; CAS No. 141–79–7). EPA has determined that, since testing of MO has been completed according to the terms of an enforceable consent agreement, testing required under the test rule would be duplicative and therefore, the test rule is no longer needed.

EFFECTIVE DATE: This final rule shall take effect on June 27, 1996.

FOR FURTHER INFORMATION CONTACT: Susan B. Hazen, Director, Environmental Assistance Division (7408), Office of Pollution Prevention and Toxics, U.S. Environmental Protection Agency, 401 M St., SW., Washington, DC 20460; telephone: (202) 554–1404, TDD: (202) 554–0551. Internet address: TSCA-Hotline@epamail.epa.gov.

SUPPLEMENTARY INFORMATION:

I. Background and Basis for this Action

In response to the Toxic Substances Control Act Interagency Testing Committee's designation of mesityl oxide (MO; CAS No. 141-79-7) as a priority chemical in its Fourth Report (44 FR 13866, June 1, 1979), EPA issued a two-phase final test rule (50 FR 51857, December 20, 1985 and 52 FR 19088, May 20, 1987), under section 4 of the Toxic Substances Control Act (TSCA) requiring certain health effects testing to be conducted on MO. This test rule appears at 40 CFR 799.2500. Several manufacturers of MO obtained judicial review of the rule.

On August 19, 1987, the U.S. Court of Appeals for the Fifth Circuit remanded the rule to EPA for reconsideration in light of additional, post-promulgation developments (*Shell Chemical Co. v. EPA*, 826 F.2d 295 (5th Cir. 1987)). The Court stayed the test rule pending EPA's reconsideration on remand. In August 1991, EPA entered into an enforceable consent agreement (ECA) with four manufacturers of MO that required those manufacturers to perform certain health effects tests on MO. A notice was published in the Federal Register of September 5, 1991 (56 FR 43878) announcing the conclusion of the ECA and describing the testing required by the consent agreement. The current notice references previous Federal Register notices (56 FR 43878, September 5, 1991; 52 FR 19088, May 20, 1987; and 50 FR 51857, December 20, 1985), that describe the known health effects of MO and the uses and exposures associated with this chemical substance.

The ECA contains a three-test battery that screens MO for mutagenic, subchronic, developmental and reproductive effects. The protocols used to conduct testing under the ECA are modeled on the generic protocols developed by the Organization for Economic Cooperation and Development (OECD) for the Screening Information Data Set (SIDS) testing program. The OECD SIDS program is an international cooperative program for identifying and developing the test data needed to screen and set priorities for chemical substances and mixtures having a high production volume (HPV) worldwide. The SIDS/HPV list includes chemicals, such as MO, for which few health or environmental effects test data are available.

Testing of MO under these protocols has been completed. The test results are currently being reviewed by the Risk Management Program within EPA's Office of Pollution Prevention and Toxics, and by the OECD.

Concurrently with the publication of the notice of the ECA, EPA proposed a revocation of the mesityl oxide final test rule (56 FR 43897, September 5, 1991) since the needed testing would be carried out under the ECA. No comments were received in response to this proposal. Since the needed testing has been completed in accordance with the terms of the ECA, by this action, EPA is withdrawing the final test rule for MO, by removing the rule from the Code of Federal Regulations (40 CFR 799.2500).

II. Rulemaking Record

EPA has established a record for this rulemaking under docket number OPPTS–42030K. This record contains the basic information that EPA considered in developing this final rule, and includes the following:

(1) Testing consent order for mesityl oxide with incorporated enforceable consent agreement and associated testing protocols attached as appendices.

(2) Federal Register notices pertaining to this final rule and the testing consent order and enforceable consent agreement consisting of:

(a) Fourth Report of the TSCA Interagency Testing Committee (44 FR 31866, June 1, 1979).

(b) First-phase final test rule for mesityl oxide (establishing testing requirements) (50 FR 51857, December 20, 1985).

(c) Second-phase final test rule for mesityl oxide (establishing test standards and reporting requirements) (52 FR 19088, May 20, 1987).

(d) Notice of enforceable consent agreement for mesityl oxide (56 FR 43878, September 5, 1991).

(e) Proposed rule to withdraw mesityl oxide final test rule (56 FR 43897, September 5, 1991).

A public version of this record which does not include any information claimed as confidential business information (CBI) is available for public inspection from Noon to 4 p.m., Monday through Friday, excluding legal holidays. The public record is located in the TSCA Nonconfidential Information Center, Rm. NE B–607, USEPA, 401 M St., SW., Washington, DC 20460.

III. Economic Analysis

Withdrawal of the MO test rule and the consequent elimination of the testing requirements contained in the rule will reduce testing costs. Therefore, this action should not cause adverse economic impact.

IV. Regulatory Assessment Requirements

A. Executive Order 12866

Under Executive Order 12866 (58 FR 51735, October 4, 1993), the Agency must determine whether a regulatory action is ''significant'' and therefore subject to review by the Office of Management and Budget (OMB) and subject to the requirements of the Executive Order. Section 3(f) of the Order defines a ''significant regulatory action'' as an action that is likely to result in a rule (1) having an annual effect on the economy of $100 million or more, or adversely and materially affecting a sector of the economy, productivity, competition, jobs, the environment, public health or safety, or State, local, or tribal governments or communities (also referred to as ''economically significant''); (2) creating a serious inconsistency or otherwise interfering with an action taken or planned by another agency; (3) materially altering the budgetary impacts of entitlements, grants, user fees, or loan programs or the rights and obligations of recipients thereof; or (4) raising novel legal or policy issues arising out of legal mandates, the President's priorities or the principles set forth in the Executive Order.

Pursuant to the terms of Executive Order 12866, it has been determined that this rule is not ''significant'' and is therefore not subject to OMB review.

B. Regulatory Flexibility Act

Under the Regulatory Flexibility Act (5 U.S.C. 601 *et seq.*), I certify that this test rule will not have a significant impact on a substantial number of small businesses because the action will relieve the regulatory obligation to conduct chemical testing.

C. Unfunded Mandates Reform Act

Title II of the Unfunded Mandates Reform Act of 1995 (UMRA), Pub. L. 104–4, establishes requirements for Federal agencies to assess the effects of their regulatory actions on State, local, and tribal governments and the private sector. Under section 202 of the UMRA, EPA generally must prepare a written statement, including a cost-benefit analysis, for proposed and final rules with ''Federal mandates'' that may result in expenditures to State, local and tribal governments, in the aggregate, or to the private sector, of $100 million or more in any 1 year. Before promulgating an EPA rule for which a written statement is needed, section 205 of the UMRA generally requires EPA to identify and consider a reasonable number of regulatory alternatives and to adopt the least costly, most cost-effective or least burdensome alternative that achieves the objectives of the rule. The provisions of section 205 do not apply when they are inconsistent with applicable law. Moreover, section 205 allows EPA to adopt an alternative other than the least costly, most cost-effective or least burdensome alternative if the Administrator publishes with the final rule an explanation why that alternative was not adopted. Before EPA establishes any regulatory requirements that may significantly or uniquely affect small governments, including tribal governments, it must have developed under section 203 of the UMRA a small government agency plan. The plan must provide for notifying potentially affected small governments, enabling officials of affected small governments to have meaningful and timely input in the development of EPA regulatory proposals with significant Federal intergovernmental mandates, and informing, educating and advising small governments on compliance with the regulatory requirements.

Today's rule contains no Federal mandates (under the regulatory provisions of Title II of the UMRA) for State, local, or tribal governments or the private sector. This rule reduces enforceable duties on the private sector by withdrawing a rule that requires chemical testing.

D. Paperwork Reduction Act

OMB has approved the information collection requirements contained in the final test rule under the provisions of the Paperwork Reduction Act of 1980, 44 U.S.C. 3501 *et seq.*, and has assigned OMB Control Number 2070–0033 (EPA ICR No. 1139). This rule reduces the public reporting burden associated with the testing requirements under the final test rule. A complete discussion of the reporting burden is contained at 50 FR 51857, December 20, 1985.

List of Subjects in 40 CFR Part 799

Chemicals, Chemical export, Environmental protection, Hazardous substances, Health effects, Laboratories, Reporting and recordkeeping requirements, Testing.

Dated: June 20, 1996.

Susan H. Wayland,

Acting Assistant Administrator for Prevention, Pesticides, and Toxic Substances.

Therefore, title 40 of the Code of Federal Regulations, chapter I, subchapter R, part 799 is amended as follows:

PART 799—[AMENDED]

1. The authority citation for part 799 continues to read as follows:

Authority: 15 U.S.C. 2603, 2611, 2625.

§ 799.2500 [Removed]

2. By removing § 799.2500.

[FR Doc. 96–16332 Filed 6–26–96; 8:45 am]

BILLING CODE 6560–50–F

FEDERAL COMMUNICATIONS COMMISSION

47 CFR Part 73

[MM Docket No. 95–121; RM–8660]

Radio Broadcasting Services; Dearing, KS

AGENCY: Federal Communications Commission.

ACTION: Final rule.

SUMMARY: The Commission, at the request of William Bruce Wachter, allots Channel 251A to Dearing, Kansas, as the community's first local aural transmission service. *See* 60 FR 38785, July 28, 1995. Channel 251A can be allotted to Dearing in compliance with the Commission's minimum distance separation requirements without the imposition of a site restriction. The coordinates for Channel 251A at Dearing are 37–03–31 and 95–42–47. With this action, this proceeding is terminated.

DATES: Effective August 3, 1996. The window period for filing applications will open on August 3, 1996, and close on September 3, 1996.

FOR FURTHER INFORMATION CONTACT: Pam Blumenthal, Mass Media Bureau, (202) 418–2180.

SUPPLEMENTARY INFORMATION: This is a synopsis of the Commission's *Report and Order*, MM Docket No. 95–121, adopted May 9, 1996, and released June 19, 1996. The full text of this Commission decision is available for inspection and copying during normal business hours in the FCC Reference Center (Room 239), 1919 M Street, NW., Washington, DC. The complete text of this decision may also be purchased from the Commission's copy contractor, ITS, Inc., (202) 857–3800, 2100 M Street, NW., Suite 140, Washington, DC 20037.

List of Subjects in 47 CFR Part 73

Radio broadcasting.

Part 73 of title 47 of the Code of Federal Regulations is amended as follows:

PART 73—[AMENDED]

1. The authority citation for part 73 continues to read as follows:

Authority: Secs. 303, 48 Stat., as amended, 1082; 47 U.S.C. 154, as amended.

§ 73.202 [Amended]

2. Section 73.202(b), the Table of FM Allotments under Kansas, is amended by adding Dearing Channel 251A.

Federal Communications Commission.

John A. Karousos,

Chief, Allocations Branch, Policy and Rules Division, Mass Media Bureau.

[FR Doc. 96–16345 Filed 6–26–96; 8:45 am]

BILLING CODE 6712–01–F

DEPARTMENT OF COMMERCE

National Oceanic and Atmospheric Administration

50 CFR Parts 217 and 227

[Docket No.950427119–6179–07; I.D. 061496A]

RIN 0648–AH98

Sea Turtle Conservation; Restrictions Applicable to Shrimp Trawling Activities; Additional Turtle Excluder Device Requirements Within Certain Fishery Statistical Zones

AGENCY: National Marine Fisheries Service (NMFS), National Oceanic and Atmospheric Administration (NOAA), Commerce.

ACTION: Temporary additional restrictions on fishing by shrimp trawlers in the nearshore waters off Georgia to protect sea turtles; request for comments.

SUMMARY: NMFS is imposing, for a 30-day period, additional restrictions on shrimp trawlers fishing in the Atlantic Area in inshore waters and offshore waters out to 10 nautical miles (nm)(18.5 km) from the COLREGS line, between the Georgia-Florida border and the Georgia-South Carolina border. This area includes inshore and nearshore waters in NMFS fishery statistical Zone 31, a small part of the southern portion of statistical Zone 32, and approximately 18 miles (29.0 km) of the northern portion of statistical Zone 30.

The restrictions include prohibitions on the use of soft turtle excluder devices (TEDs) and try nets with a headrope length greater than 12 ft (3.6 m) or a footrope length greater than 15 ft (4.5 m), unless the try nets are equipped with approved TEDs other than soft TEDs. This action is necessary to ensure protection for sea turtles and to prevent the continuation of high levels of mortality and strandings of threatened and endangered sea turtles.

DATES: This action is effective June 24, 1996 through 11:59 p.m. (local time) July 24, 1996.

Comments on this action must be submitted by July 24, 1996.

ADDRESSES: Comments on this action and requests for a copy of the environmental assessment (EA) or biological opinion (BO) prepared for this action should be addressed to the Chief, Endangered Species Division, Office of Protected Resources, NMFS, 1315 East-West Highway, Silver Spring, MD 20910.

FOR FURTHER INFORMATION CONTACT: Charles A. Oravetz, 813–570–5312, or Therese A. Conant, 301–713–1401.

SUPPLEMENTARY INFORMATION:

Background

All sea turtles that occur in U.S. waters are listed as either endangered or threatened under the Endangered Species Act of 1973 (ESA). The Kemp's ridley (*Lepidochelys kempii*), leatherback (*Dermochelys coriacea*), and hawksbill (*Eretmochelys imbricata*) are listed as endangered. Loggerhead (*Caretta caretta*) and green (*Chelonia mydas*) turtles are listed as threatened, except for breeding populations of green turtles in Florida and on the Pacific coast of Mexico, which are listed as endangered.

The incidental take and mortality of sea turtles as a result of shrimp trawling activities have been documented in the Gulf of Mexico and along the Atlantic seaboard. Under the ESA and its implementing regulations, taking sea turtles is prohibited, with exceptions set forth at 50 CFR 227.72. The incidental taking of turtles during shrimp trawling in the Gulf and Atlantic Areas (as defined in 50 CFR 217.12) is excepted from the taking prohibition, if the sea turtle conservation measures specified in the sea turtle conservation regulations (50 CFR part 227, subpart D) are employed. The regulations require most shrimp trawlers operating in the Gulf and Atlantic Areas to have a NMFS-approved TED installed in each net rigged for fishing, year round.

The conservation regulations provide a mechanism to implement further restrictions of fishing activities, if necessary to avoid unauthorized takings of sea turtles that may be likely to jeopardize the continued existence of listed species or that would violate the terms and conditions of an incidental take statement (ITS) or incidental take permit. Upon a determination that incidental takings of sea turtles during fishing activities are not authorized, additional restrictions may be imposed to conserve listed species and to avoid unauthorized takings. Restrictions may be effective for a period of up to 30 days and may be renewed for additional periods of up to 30 days each (50 CFR 227.72(e)(6)).

Under NMFS' regulatory authority to implement further restrictions to fishing activities in order to prevent

unauthorized takings, temporary additional restrictions were imposed on shrimp fishing several times during 1995. Sea turtle stranding events and related shrimping activities in 1995 are discussed in detail in the temporary requirements implemented in nearshore waters along two sections of the Texas and Louisiana coast on April 30, 1995 (60 FR 21741, May 3, 1995), along the Georgia coast on June 21, 1995 (60 FR 32121, June 20, 1995), along the entire Texas coast and the western portion of Louisiana pursuant to a court order on August 3, 1995 (60 FR 44780, August 29, 1995), and along Georgia and the southern portion of South Carolina on August 11, 1995 (60 FR 42809, August 17, 1995). Descriptions of these rules, restrictions, and reasons therefor, are provided in the preamble to the rules and are not repeated here.

On September 13, 1995 (60 FR 47544), NMFS published an Advance Notice of Proposed Rulemaking (ANPR), which announced that it was considering proposing regulations that would identify special sea turtle management areas in the southeastern Atlantic and Gulf of Mexico and impose additional conservation measures to protect sea turtles in those areas. After reviewing over 900 comments, including two industry proposals, NMFS published a proposed rule (61 FR 18102, April 24, 1996) that would impose permanent measures to more effectively protect sea turtles from incidental capture and mortality in the shrimp trawl fishery. Measures contained in the proposed rule to strengthen the sea turtle conservation measures are: Removing the approval of the use of all soft turtle excluder devices (TEDs) effective December 31, 1996; requiring by December 31, 1996, the use of NMFS-approved hard TEDs in try nets with a headrope length greater than 12 ft (3.6 m) or a footrope length greater than 15 ft (4.6 m); establishing Shrimp Fishery Sea Turtle Conservation Areas (SFSTCAs) in the northwestern Gulf of Mexico consisting of the offshore waters out to 10 nm(18.5 km) along the coasts of Louisiana and Texas from the Mississippi River South Pass (west of 89°08.5′ W. long.) to the U.S.-Mexican border, and in the Atlantic consisting of the inshore waters and offshore waters out to 10 nm (18.5 km) along the coasts of Georgia and South Carolina from the Georgia-Florida border to the North Carolina-South Carolina border; and, within the SFSTCAs, removing the approval of the use of all soft TEDs, imposing the new try net restrictions, and prohibiting the use of bottom-opening hard TEDs, effective 30 days after publication of the final rule. The comment period on the proposed rule originally extended through June 10, 1996, during which time 10 public hearings were held throughout the southeastern United States. In response to several requests for an extension of the comment period, NMFS has reopened the comment period on the proposed rule through July 15 to provide further opportunity to submit comments and review additional analyses, including the preliminary report scheduled to be submitted by June 28, 1996, by the sea turtle expert working group. The formation of this group of scientists to analyze existing databases to determine sea turtle population abundance, population trends, and sustainable take levels was a requirement of the November 14, 1994, biological opinion.

Recent Events

Reports of increased turtle strandings in Georgia began during May of 1996. By the end of the month, turtle strandings in Georgia had risen to the highest levels for the month of May since 1987, when TEDs were not required. In May 1996, 60 turtles were reported stranded in Georgia. The level of reported turtle strandings in Georgia had been averaging only 28 turtles during the month of May since the implementation of TED requirements in 1988. Not only did the total of 60 stranded turtles in May 1996 more than double the previous average, but 10 of the stranded animals were the highly endangered Kemp's ridley sea turtle. High strandings have continued in Georgia in the beginning of June, with a total of 15 strandings reported between June 1 and June 7.

Georgia state waters generally open to shrimping on June 1 each year. Prior to the opening of state waters, shrimping only occurs in the Federal waters beyond 3 nm (5.6 km) from shore. Early season shrimp resource surveys conducted by the Georgia Department of Natural Resources in 1996 revealed extremely low shrimp abundance in the sounds north of St. Simon's Sound. The harsh winter was likely responsible for the poor shrimp abundances in the north. The poor shrimp recruitment rates have caused the opening of Georgia waters to be delayed until June 24, to provide additional time for shrimp to mature. Shrimp fishing effort off of the southern portion of Georgia has been high, even before the opening of state waters, and effort has been concentrated off of a few particular areas. Vessels from North and South Carolina have also been fishing off of Georgia due to poor shrimp abundances in their more northerly home states. Trawlers are concentrated just outside state waters, generally in a narrow strip 3 to 4 nm (5.6 km to 7.4 km) from shore.

The overall level of fishing effort off Georgia has been steadily increasing since late April, in concert with rising stranding levels. A series of aerial surveys for natural resource purposes has documented the increasing number of boats fishing in Federal waters off of Georgia with the following boat counts: On April 4, 0 trawlers; on April 11, 0 trawlers; on April 23, 2 trawlers; on April 29, 13 trawlers; on May 7, 63 trawlers; On May 14, 99 trawlers; on May 21, 81 trawlers; on May 30, 84 trawlers; and on June 4, 158 trawlers. Most of the vessels seen were concentrated off the openings of Georgia's southerly sounds: Cumberland Sound, St. Simons Sound, and St. Andrew Sound. The turtle strandings in May have also been concentrated on Georgia's southerly islands: Cumberland, Little Cumberland, Jekyll, and St. Simons Islands. Onshore winds have created favorable conditions for turtles to strand, even if they may have died outside of state waters, and the strandings have been distributed downwind of the shrimping concentrations.

NMFS is concerned that the opening of Georgia state waters to shrimping on June 24 will result in very high levels of fishing effort and pose a threat to sea turtles. Trawling along the beaches will commence around the time of peak nesting for female loggerheads in Georgia. The pulse of fishing effort immediately following the opening will likely be very heavy. Not only Georgia-based fishers, but many Florida, North Carolina, and South Carolina fishers will work Georgia waters. The numbers of North and South Carolina boats operating in Georgia this year may be greater than usual, because the shrimp abundance will likely be better in Georgia than in their home state waters. NMFS has held discussions with shrimp industry and managers in Georgia and South Carolina regarding coordinating the opening dates of each state's waters to shrimping, which would prevent successive pulses of high effort in each state. Due to this year's shrimp stock status, however, a coordinated date was not agreed upon. South Carolina state waters opened to shrimping on June 6, 1996, and approximately 125 boats were observed working in state and Federal waters off South Carolina on June 7. This relatively low effort level is indicative of unfavorable shrimping conditions in South Carolina and the probability for a large shift of effort to Georgia when state waters open there.

Analysis of Other Factors

Examination of the strandings in Georgia does not indicate any significant sources of mortality other than shrimp trawling. The carcasses have primarily been coming ashore directly downwind of areas in which shrimping effort has been concentrated. NMFS and state personnel will continue to investigate factors other than shrimping that may contribute to sea turtle mortality in Georgia, including other fisheries and environmental factors.

Comments on the Proposed Rule

NMFS has been receiving comments on the proposed rule to revise the sea turtle conservation requirements and has also held 10 public hearings on the proposed rule. NMFS will make a complete response to all of the comments received on the proposed rule when the comment period closes and before taking any final action on the proposed rule. Many of the comments received to date, and in particular the statements presented at the public hearing in Brunswick, GA on May 24, 1996, are germane to the recent events, the measures being taken in this action, and the area and the shrimpers being affected by this action. Therefore, NMFS believes it is useful to address briefly some of those comments at this time as they relate to the present action. The discussion that follows provides NMFS' preliminary views and responses to the comments, and will be more fully addressed in the final decision regarding the proposed rule.

The proposed reduction of the size of try nets that are exempt from TED requirement drew numerous comments, ranging from total support to total opposition. Most fishers who commented on this proposal indicated that requiring TEDs in large try nets with 20 ft (6.1 m) headrope lengths would not be inappropriate, but that the 12 ft (3.7 m) headrope length and 15 ft (4.6 m) footrope length of the proposed rule was too small. Many of these fishers indicated that they preferred to use try nets of 15 or 16 ft (4.6 or 4.9 m) headrope lengths and that reducing the size of TED-exempt try nets, but still allowing the use of 15 or 16 ft (4.6 or 4.9 m) try nets without TEDs, would be acceptable to them. Objections to requirements for TEDs in try nets smaller than 15 ft (4.6 m) headrope length included alleged difficulty in handling the try net with a TED installed, the need to use a large try net in order to sample for white shrimp, and impossibility of installing TEDs in try nets. Many of the comments revealed the misconception that the proposed rule would completely prohibit the use of try nets greater than 12 ft (3.7 m) headrope length or 15 ft (4.6 m) footrope length. Under the proposed rule, fishers would be able to use any try net larger than 12 ft (3.7 m) headrope length or 15 ft (4.6 m) footrope length so long as a TED was installed. Fishers who felt that a large try net—20 ft (6.1 m) headrope length, for example—was necessary for sampling white shrimp could still use that try net, but a TED would have to be installed to exclude any turtles captured by the try net.

NMFS gear experts have examined TED installations in various sizes of try nets. Successful installations of NMFS-approved TEDs, were made in try nets with headrope lengths of 20, 15, 12, and 10 ft (6.1, 4.6, 3.7, and 3.0 m). The effectiveness of the TEDs did not appear to be reduced by installation in the try nets, when a small sample of juvenile turtles were introduced into the TED-equipped try nets. All of the try nets tested were bib trawls, a net type that opens high off the bottom and is preferred for sampling white shrimp. The TED-equipped try nets exhibited no problems with gear deployment or retrieval at any of the tested try net sizes. The only observed problem with TED installation in the try nets was a slight loss of net spread in the smaller net sizes due to the restriction of net stretching at the throat of the net where the TED is attached. The observed loss of net spread could be compensated with the installation of slightly larger trawl doors on the try net.

As discussed in the proposed rule, NMFS has conducted an additional study to clarify the relationship between try net headrope length and the rate of sea turtle captures. In March 1996, NMFS examined the sea turtle capture rates of three sizes of try net (12, 15, and 20 ft (3.7, 4.6, 6.1 m) headrope length) in Canaveral Channel, FL, an area of high sea turtle abundance. In 100 simultaneous, short-duration tows of the three try nets, 35 turtles were caught: 17 in the 20 ft (6.1 m) net, 10 in the 15 ft (4.6 m) net, and 8 in the 12 ft (3.7 m) net. Thus, the number of turtles captured increased as net size increased. The catch per unit effort (CPUE), which standardizes catch rates by 100 ft (30.5 m) of headrope length hours fished for the three net sizes were 1.70, 1.33, and 1.33 for the 20 ft, 15 ft, and 12 ft (6.1, 4.6, 3.7 m) headrope length try nets, respectively. These adjusted CPUEs were not significantly different and indicate that all try nets capture turtles at approximately the same rate, proportional to headrope length.

In summary, TEDs can be effectively installed in large and small try nets, with very minor or no operational changes, and they should be effective in excluding captured turtles. The TEDs are compatible with large try nets and bib-type try nets that can be used for sampling white shrimp. NMFS believes that allowing 15 or 16 ft (4.6 or 4.9 m) headrope length try nets to remain exempt from TED requirements, as proposed by some commenters, would result in sea turtles being provided with little additional protection, as many shrimpers would continue to use the larger try nets and to capture turtles at the same rate without the possibility of escape through TEDs. The proposed exemption of try nets with a 12 ft (3.7 m) headrope length and 15 ft (4.6 m) footrope length or less would provide greater sea turtle protection, in that fishers will be able to either use TEDs in larger try nets or use try nets of a smaller size, that are readily commercially available and that will reduce the rate of turtle capture due solely to its size. Smaller size try nets also have only a small tail bag to accumulate shrimp catch. Thus, there would be little incentive to use a small try net longer than necessary to monitor shrimp catch rates.

The proposal to remove the approval of soft TEDs also drew numerous comments, again ranging from opposition to support. Fishers and other commenters from the Southeast Atlantic area generally concurred that soft TEDs were not as effective as hard TEDs in excluding turtles. Many commenters from this area believe that banning soft TEDs is a reasonable measure to attempt to reduce sea turtle mortality and strandings. Some commenters from the Gulf of Mexico shrimp fishery objected to the removal of the approval of all soft TEDs, however. While agreeing that the Morrison, Taylor, and Parrish soft TEDs may not be effective and should be disapproved, many commenters stated that the evidence regarding the performance of the Andrews soft TED was not sufficient to justify disapproving it, and that the Andrews TED had many positive qualities justifying its continued use. In response to these comments, NMFS has undertaken additional studies, including observations of Andrews TED performance versus hard TED performance on the commercial shrimping grounds and is in the process of examining the turtle exclusion abilities of commercially available Andrews soft TEDs. NMFS will make a complete response, including the results of the additional studies regarding the

Andrews soft TED, once all studies are completed and before taking any final action on the proposed rule. The Andrews TED is believed to be used only rarely in the Atlantic shrimping grounds, where the Morrison is the preferred soft TED.

The measure of the proposed rule that was most vigorously and frequently opposed by commenting fishers and other shrimp industry representatives in the Southeastern Atlantic Area was the prohibition on the use of bottom-opening hard TEDs in the proposed Atlantic SFSTCA. One conservation organization—Earth Island Institute—and the state departments of natural resources in both Georgia and South Carolina also objected to the proposed bottom-opening TED ban. Commenters stated that bottom-opening hard TEDs are necessary to exclude the large amounts of bottom debris that occur in their fishing areas. They also stated that top-opening hard TEDs are more likely than bottom-openers to twist, which would lose shrimp and entangle turtles and also that top-opening TEDs were likely to bog down and cause the entire TED and tailbag to be torn off. Some commenters stated that the longer escape times of turtles in bottom-opening hard TEDs versus top-opening hard TEDs and prolonged submergences resulting from repeated captures were not sufficiently convincing reasons for restricting the use of bottom-opening hard TEDs. Many commenters asked that restrictions on the use of bottom-opening TEDs not be implemented before other sea turtle protective measures are implemented and evaluated for their effectiveness.

NMFS has repeatedly tried to verify the reported problems of twisting, clogging, and torn off top-opening TEDs but has generally been unable to do so. The preference of Louisiana shrimpers for top-opening hard TEDs in areas with extremely trashy bottoms does not support a systematic operational problem with top-opening hard TEDs. Nonetheless, NMFS recognizes that fishers in the Atlantic have predominantly used bottom-opening hard TEDs, were among the first to begin widespread use of TEDs, and have experience and a strong preference for this gear type. NMFS remains concerned that bottom-opening hard TEDs that are not properly floated or weighed down with debris will prevent turtle escape because the escape opening is blocked by the sea floor, and that bottom-opening hard TEDs are less efficient than top-opening hard TEDs in releasing turtles, with turtles taking approximately twice as long to escape, even under ideal conditions. In controlled testing of TEDs, however, properly floated bottom-opening hard TEDs have always shown excellent success at sea turtle exclusion, albeit at a somewhat slower rate than for top-opening hard TEDs. NMFS is currently conducting additional testing on the relative effectiveness and advantages of top- and bottom-opening hard TEDs. Pending the results of this testing, NMFS believes that capture in try nets and ineffective soft TEDs poses a greater threat to sea turtles than bottom-opening hard TEDs, due to a lesser likelihood of escape from soft TEDs and the longer forced submergences in try nets. For this reason, NMFS is not including restrictions on the use of bottom-opening TEDs in this temporary rule, although it is a component of the proposed rule. However, continued elevated strandings following the implementation of the conservation measures in this action may result in increased gear restrictions or area closures.

Some Georgia fishers offered a proposal that they felt would address the problem of the adverse effects of heavy shrimping effort. These fishers advocated a nighttime closure of Federal waters to shrimping, at least during the early part of the shrimping season. The recommended nighttime closure would be compatible with Georgia state laws that prohibit trawling between 8 p.m. and 5 a.m. eastern standard time. Enforcement of closures in state waters would be greatly enhanced by cooperating Federal action and a coordinated state-Federal closure may also be a boon to local, primarily daytime, shrimpers by reducing the pressure to fish around the clock. Traditionally, white shrimp are primarily caught during the day, while brown shrimp are primarily pursued at night. Unfortunately commenters have not provided NMFS with any data that would allow an assessment of the possible impacts of a nighttime closure in Federal waters on shrimp catch, catch allocation, or effort reduction and the possible benefits to sea turtles. If NMFS can determine that the benefits to sea turtles from nighttime closures of Federal waters off Georgia would be significant and would be compatible with other resource management goals, nighttime closures may be pursued through a future rulemaking action. NMFS requests the public to submit any relevant information on the impacts of nighttime closures of Federal waters off of Georgia.

Restrictions on Fishing by Shrimp Trawlers

Pursuant to 50 CFR 227.72(e)(6), the exemption for incidental taking of sea turtles in 50 CFR 227.72(e)(1) does not authorize incidental takings during fishing activities if the takings would violate the restrictions, terms or conditions of an ITS or incidental take permit, or may be likely to jeopardize the continued existence of a species listed under the ESA. The June 11, 1996 biological opinion includes a condition under the ITS that specifies that NMFS must respond to stranding events the reach unacceptable levels based on historical events. If investigations suggest that management action is necessary in areas of high shrimping effort, temporary additional restrictions will be required pursuant to 50 CFR 227.72(e)(6). Historically, Georgia fishers have exhibited a high degree of cooperation with existing regulations. Therefore, it does not appear that the recent high level of strandings along the Georgia coast are a result of non-compliance with existing sea turtle conservation measures. Based on the foregoing analysis of relevant factors and the biological opinion prepared in conjunction with this action pursuant to Section 7 of the ESA, the AA has determined that continued takings of sea turtles by shrimp fishing off Georgia are unauthorized, are likely to continue if no action is taken, and would violate the terms and conditions of the incidental take statement of the June 11, 1996 biological opinion and therefore takes this action.

The measures that NMFS is implementing include:

1. Prohibition of the use of soft TEDs; and

2. Prohibition of the use of try nets, with a headrope length greater than 12 ft (3.7 m) or a footrope length greater than 15 ft (4.6 m), unless the try nets are equipped with NMFS-approved hard or special hard TEDs.

These restrictions are being applied in inshore waters and offshore waters seaward to 10 nm (18.5 km) along the Georgia coast, between the Georgia-Florida border and the Georgia-South Carolina border. This area includes inshore and nearshore waters in NMFS fishery statistical Zone 31, a small part of the southern portion of statistical Zone 32, and approximately 18 miles (29.0 km) of the northern portion of statistical Zone 30. Under 50 CFR 217.12, offshore waters are defined as marine and tidal waters seaward of the 72 COLREGS demarcation line (International Regulations for Preventing Collisions at Sea, 1972), as

depicted or noted on nautical charts published by NOAA (Coast Charts, 1:80,000 scale) and as described in 33 CFR part 80; inshore waters are those marine and tidal waters shoreward of the COLREGS line. For the purpose of this rule only, notwithstanding any other definitions that may exist, the Georgia-South Carolina border in the Atlantic Ocean is defined to be the line segment connecting the points 32°02′30.6″ N. lat., 080°51′03.0″ W. long. (the seaward tip of the jetty protecting the north side of the mouth of the Savannah River) and 31°58′46.8″ N. lat., 080°38′21.0″ W. long.(a point exactly 10 nm (approximately 18.5 km) seaward of the nearest land at Tybee Island and located on the line extending in a direction of 109° from true north from the previous point), and the Georgia-Florida border in the Atlantic Ocean is defined as the line along 30°42′45.6″ N. lat.

Pursuant to 50 CFR 227.72(e)(4)(iii) soft TEDs have been certified and approved for use. However, the use of soft TEDs by the shrimping fleet has been associated with elevated sea turtle strandings. Because of the inherent properties of synthetic webbing, soft TEDs are difficult to install properly and once installed, their actual in-water configuration, shape, and performance cannot be determined even by professional net makers. Furthermore, changes made by a trawler captain to the fishing configuration of a net to match fishing conditions—such as changing door sizes or angles, adding flotation to the headrope, or adjusting center bridle tension on tongue or bib trawls—and the accumulation of catch and debris in the trawl will all affect the shape of the soft TED and thus its effectiveness at releasing turtles. A more complete explanation for the prohibition of soft TEDs is provided in the temporary rulemakings implemented by NMFS last year and in the proposed rule, and is not repeated here.

Pursuant to 50 CFR 227.72(e)(2)(ii)(B)(*1*), try nets up to 20 ft (6.1 m) headrope length have been exempted from the TED requirements, because they are only intended for use in brief sampling tows not likely to result in turtle mortality. Turtles are, however, caught in try nets, and either through repeated captures or long tows, try nets can contribute to the mortality of sea turtles. Takes of sea turtles in try nets, including two mortalities, have been documented by NMFS, and anecdotal accounts suggest multiple sea turtle captures in try nets are occurring in Georgia waters. The original assumption by NMFS that try nets are only towed for short periods of time now appears to be invalid. In addition to numerous anecdotal reports from shrimpers to this effect, NMFS gear specialists have observed shrimpers regularly towing try nets for periods well over an hour. Since long try net tows defeat the purpose of assessing catch rates, the apparent intention of these long tows is to use the try nets as auxiliary nets to increase the overall shrimp capture, using a TED-less net. Such use of try nets may be seriously contributing to turtle capture, mortality, and strandings.

Requirements

This action is authorized by 50 CFR 227.72(e)(6). The definitions in 50 CFR 217.12 are applicable to this action, as well as all relevant provisions in 50 CFR parts 217 and 227. For example, § 227.71(b)(3) provides that it is unlawful to fish for or possess fish or wildlife contrary to a restriction specified or issued under § 227.72(e)(3) or (e)(6).

NMFS hereby notifies owners and operators of shrimp trawlers (as defined in 50 CFR 217.12) that for a 30-day period, starting on June 24, 1996 through 11:59 p.m. (local time) July 24, 1996, fishing by shrimp trawlers in inshore waters and offshore waters seaward to 10 nm (18.5 km) from the COLREGS line along the coast of Georgia, between the Georgia-South Carolina border and the Georgia-Florida border, is prohibited unless the shrimp trawler is in compliance with all applicable provisions in 50 CFR 227.72(e) and the following prohibitions:

1. The use of soft TEDs described in 50 CFR 227.72(e)(4)(iii) is prohibited.

2. The use of try nets with a headrope length greater than 12 ft (3.7 m) or a footrope length greater than 15 ft (4.6 m) is prohibited unless a NMFS-approved hard TED or special hard TED is installed when the try nets are rigged for fishing. Try nets with a headrope length 12 ft (3.7 m) or less and a footrope length 15 ft (4.6 m) or less remain exempt from the requirement to have a TED installed in accordance with 50 CFR 227.72(e)(2)(ii)(B)(*1*). For the purpose of this rule only, notwithstanding any other definitions that may exist, the Georgia-South Carolina border in the Atlantic Ocean is defined to be the line segment connecting the points 32°02′30.6″ N. lat., 080°51′03.0″ W. long. (the seaward tip of the jetty protecting the north side of the mouth of the Savannah River) and 31°58′46.8″ N. lat., 080°38′21.0″ W. long.(a point exactly 10 nm (approximately 18.5 km) seaward of the nearest land at Tybee Island and located on the line extending in a direction of 109° from true north from the previous point), and the Georgia-Florida border in the Atlantic Ocean is defined as the line along 30°42′45.6″ N. lat.

All provisions in 50 CFR 227.72(e), including, but not limited to 50 CFR 227.72(e)(2)(ii)(B)(*1*) (use of try nets), and 50 CFR 227.72(e)(4)(iii) (Soft TEDs), that are inconsistent with these prohibitions are hereby suspended for the duration of this action.

NMFS hereby notifies owners and operators of shrimp trawlers in the area subject to restrictions that they are required to carry a NMFS-approved observer aboard such vessel(s) if directed to do so by the Regional Director, upon written notification sent to either the address specified for the vessel registration for documentation purposes, or otherwise served on the owner or operator of the vessel. Owners and operators and their crew must comply with the terms and conditions specified in such written notification.

Additional Conservation Measures

The AA may withdraw or modify a determination concerning unauthorized takings or any restriction on shrimping activities if the AA determines that such action is warranted. Notification of any additional sea turtle conservation measures, including any extension of this 30-day action, will be published in the Federal Register pursuant to 50 CFR 227.72(e)(6).

NMFS will continue to monitor sea turtle strandings to gauge the effectiveness of these conservation measures.

Classification

This action has been determined to be not significant for purposes of E.O. 12866.

Because neither section 553 of the Administrative Procedure Act (APA), nor any other law requires that general notice of proposed rulemaking be published for this action, under section 603(b) of the Regulatory Flexibility Act, an initial Regulatory Flexibility Analysis is not required.

Pursuant to section 553(b)(B) of the APA, the AA finds that there is good cause to waive prior notice and opportunity to comment on this rule. It is impracticable and contrary to the public interest to provide prior notice and opportunity for comment, because unusually high levels of turtle strandings have been reported in shrimp fishery statistical Zone 30 (northern portion) and 31, and continue to occur as shrimping continues. Any delay in this action will likely result in

additional fatal takings of listed sea turtles. In addition, good cause exists because NMFS has addressed comments or similar provisions in the proposed rule in the context of this temporary action.

Pursuant to section 553(d) of the APA, the AA finds there is good cause to waive the 30-day delay in effective date. In addition to the immediate need to protect listed sea turtles, these restrictions are expected to impose only a minor burden on shrimp fishers. The predominant TED designs in use in the affected area are single-grid hard TEDs, which will not require any modifications. Trawlers equipped with only soft TEDs may be required to move out of the affected area, or to equip their nets with hard TEDs. However, these trawlers are expected to be few in number given that many may have already equipped their nets with hard TEDs in response to the previous rules requiring the use of such TEDs in waters off Georgia in 1995. For those trawlers who have yet to equip their nets with hard TEDs, single-grid hard TEDs are available for $75.00 to $350.00 and take only several hours to install. While some fishers may not elect to equip their larger try nets with hard grid TEDs, and thus, would be unable to monitor their catch rate during long tows, they could monitor their catch rate with smaller try nets not required to have an NMFS-approved hard TED installed. The burden of this action on shrimp fishers is expected to be minimized by the fact that fishers in most of the affected areas have previously modified or acquired gear to comply with earlier restrictions that were identical or more stringent than the present action.

The AA prepared an EA for the final rule (57 FR 57348, December 4, 1992) requiring TED use in shrimp trawls and establishing the 30-day notice procedures. An EA has been prepared for this action. Copies of the EA are available (see **ADDRESSES**).

Dated: June 21, 1996.

Charles Karnella,

Acting Director, Office of Management Information, National Marine Fisheries Service.

[FR Doc. 96–16435 Filed 6–24–96; 4:13 pm]

BILLING CODE 3510–22–F

---

50 CFR Part 625

[Docket No. 960314074–6074–01; I.D. 061896B]

Summer Flounder Fishery; Extension of Scup Fishery Emergency

AGENCY: National Marine Fisheries Service (NMFS), National Oceanic and Atmospheric Administration (NOAA), Commerce.

ACTION: Emergency interim rule; extension.

SUMMARY: NMFS issues an extension to an emergency interim rule that implements minimum fish size and minimum mesh requirements for the scup fishery north of Cape Hatteras. Emergency implementation of the measures is necessary because of the overexploited status of the stock. The emergency interim rule for scup that is effective from March 22, 1996, through June 25, 1996, is extended another 90 days by this action.

EFFECTIVE DATE: The emergency interim rule published on March 27, 1996 at 61 FR 13452 is extended through September 23, 1996.

FOR FURTHER INFORMATION CONTACT: Regina Spallone, Fishery Policy Analyst,(508) 281–9221.

SUPPLEMENTARY INFORMATION: In November 1995, the Mid-Atlantic Fishery Management Council (Council) initially requested emergency action to implement management measures for the scup fishery, which include a minimum fish size of 9 inches (22.9 cm) total length (TL) for the commercial scup fishery and 7 inches (17.8 cm) TL for the recreational fishery, and a mesh restriction for any vessel fishing in the Exclusive Economic Zone (EEZ) and possessing 4,000 lb (1,814 kg) or more of scup. An emergency rule to implement immediately these measures was published in the Federal Register on March 27, 1996 (61 FR 13452), with effective dates of March 22, 1996, through June 25, 1996. A full discussion of the status of the scup stock and the need for emergency action is found in the preamble to that emergency interim rule and is not repeated here.

In November 1995, the Council adopted the same measures contained in the emergency rule in Amendment 8 to the Fishery Management Plan for the Summer Flounder Fishery (FMP), which it has submitted for Secretarial review. Amendment 8 also contains many additional provisions not contained in the emergency rule. A proposed rule to implement Amendment 8 to the FMP was published in the Federal Register on June 3, 1996 (61 FR 27851), with an ending date for public comments of July 18, 1996. Therefore, if Amendment 8 is approved, the final rule to implement it will not be published prior to end of the first 90-day effective period of this emergency rule (June 25, 1996), thus leaving a gap between the ending date of the emergency interim rule and the final rule implementing Amendment 8. This would leave the already overfished scup stock unprotected from increased exploitation. Therefore, an extension to the emergency rule is needed. The Council, at its April 1996 meeting requested an extension of the emergency interim rule implementing management measures for the scup fishery. This extension of the emergency rule is in effect from June 26, 1996, through September 23, 1996, or until regulations implementing Amendment 8 become effective.

Classification

The Assistant Administrator for Fisheries (AA) has determined that this rule is necessary to respond to an emergency situation and is consistent with the Magnuson Fishery Conservation and Management Act (Magnuson Act) and other applicable law.

Extension of the emergency rule is intended to prevent the possible collapse of the scup fishery. The AA finds good cause to extend the emergency rule in accordance with section 305(c)(3)(B) of the Magnuson Act. It would be contrary to the public interest to provide notice and opportunity for comment, or to delay for 30 days the effective date of this emergency rule under the provisions of sections 553(b) and (d) of the Administrative Procedure Act. Failure to implement an extension of the emergency measures would leave the overfished scup stock unprotected.

This rule has been determined to be not significant for purposes of E.O. 12866.

This rule is exempt from the procedures of the Regulatory Flexibility Act because the rule is issued without opportunity for prior public comment.

Authority: 16 U.S.C. 1801 *et seq.*

Dated: June 20, 1996.

Henry R. Beasley,

Acting Assistant Administrator for Fisheries, National Marine Fisheries Service.

[FR Doc. 96–16372 Filed 6–24–96; 4:13 pm]

BILLING CODE 3510–22–F

---

50 CFR Part 679

[Docket No. 960321089–6175–02; I.D. 031396B]

RIN 0648–AG41

Fisheries of the Exclusive Economic Zone off Alaska; Allow Processing of Non-Individual Fishing Quota Species

AGENCY: National Marine Fisheries Service (NMFS), National Oceanic and Atmospheric Administration (NOAA), Commerce.

ACTION: Final rule.

SUMMARY: NMFS issues a final rule that implements Amendment 33 to the Fishery Management Plan for the Groundfish Fishery of the Bering Sea and Aleutian Islands Area and Amendment 37 to the Fishery Management Plan for Groundfish of the Gulf of Alaska (GOA). These amendments and this final implementing rule are necessary to allow fuller use of the fishery resources in and off of Alaska. This action is intended to allow persons authorized to harvest individual fishing quota (IFQ) sablefish to process species other than IFQ halibut and IFQ sablefish.

EFFECTIVE DATE: July 26, 1996.

ADDRESSES: Copies of the Environmental Assessment/Regulatory Impact Review (EA/RIR) for this action may be obtained from the Fisheries Management Division, Alaska Region, NMFS, 709 W. 9th Street, Room 453, Juneau, AK 99801, or P.O. Box 21668, Juneau, AK 99802, Attention: Lori J. Gravel.

FOR FURTHER INFORMATION CONTACT: John Lepore, 907–586–7228.

SUPPLEMENTARY INFORMATION: As part of the President's Regulatory Reform Initiative, NMFS issued a final rule (61 FR 31228, June 19, 1996) removing six parts in title 50 of the CFR (50 CFR parts 671, 672, 673, 675, 676, and 677) and consolidated the regulations contained therein into one new part (50 CFR part 679). This consolidated regulation provides the public with a single reference source for the Federal fisheries regulations specific to the EEZ off Alaska. The restructuring of the six parts results in one set of regulations that is more concise, clearer, and easier to use than the six separate parts. NMFS also identified duplicative and obsolete provisions and removed those measures from the six parts. No substantive changes were made to the regulations by the consolidation or removal of duplicative and obsolete provisions. The consolidated final rule will become effective July 1, 1996.

Amendments 33 and 37 allow persons authorized to harvest IFQ sablefish, based on an annual allocation of IFQ assigned to vessel categories B or C, to process species other than IFQ halibut and IFQ sablefish. Additional information on this action may be found in the preamble to the proposed rule.

Several changes to the regulations implementing the IFQ program are necessary to implement Amendments 33 and 37. First, the definitions of ''freezer vessel'' and ''catcher vessel'' (as ''catcher vessel'' relates to the IFQ program) are removed.

Second, references to the removed definitions are replaced with alternative language. Finally, a provision is added to allow the processing of fish other than IFQ halibut and IFQ sablefish on board vessels on which persons are harvesting IFQ sablefish based on an annual allocation of IFQ assigned to vessel categories B and C. A detailed explanation of these changes follows.

Removal of the ''Freezer Vessel'' and ''Catcher Vessel'' Definitions

After evaluating the effects that Amendments 33 and 37 would have on the IFQ Program, NMFS determined that the definitions of ''freezer vessel'' and ''catcher vessel'' at § 679.2 (previously found in part 676, subparts B and C) were unnecessary and proposed their removal. NMFS proposed to replace these definitions with the definition of ''processing,'' which can be found at § 679.2 (previously found at §§ 672.2 and 675.2).

The definition of processing is important to the revised specifications of vessel categories at § 679.40(a)(5)(ii) (previously found in § 676.20(a)(2)). Vessel category A, which currently is freezer vessels of any length, is changed to be vessels of any length authorized to process IFQ species. Quota share (QS) and the resulting IFQ is designated by IFQ species; therefore, a person can only process the IFQ species designated on the IFQ permit (i.e., IFQ halibut or IFQ sablefish). The authorization to process IFQ species is an inherent characteristic of QS assigned to vessel category A. This determination was made at initial issuance based on criteria found at § 679.40(a)(5) (previously found in § 676.20(c)). The other vessel categories found at § 679.40(a)(5)(ii) (previously found in § 676.20(a)(2)) (i.e., vessel categories B, C, and D) also do not refer to the removed definitions.

Other Changes to the Regulations Due to the Removal of the ''Freezer Vessel'' and ''Catcher Vessel'' Definitions

As explained above, § 679.40(a)(5)(ii) (previously found at § 676.20(a)(2)) no longer refers to freezer vessels or catcher vessels, but rather describes vessel categories in terms of: (1) Vessel length; (2) specific species designations (i.e., vessel category D for IFQ halibut only); and (3) authorization to process IFQ species. Similarly, all other references in part 679, subpart D (previously found in part 676 subparts B and C), to freezer vessels or catcher vessels are removed.

For example, § 679.7(f)(13) (previously found in § 676.16(o)) prohibits persons from having processed and unprocessed IFQ species on board a vessel during the same trip. This replaces the current prohibition on operating as a catcher vessel and a freezer vessel during the same trip. This change, along with the addition of § 679.7(f)(16), allows a person authorized to harvest IFQ sablefish, based on an annual allocation of IFQ assigned to vessel categories B or C, to process fish other than IFQ halibut or IFQ sablefish, a behavior consistent with the intent of the North Pacific Fishery Management Council (Council) in proposing Amendments 33 and 37. Other sections from which references to freezer vessels and catcher vessels are removed include: § 679.41(g)(1) through (4) and (h) (previously found in § 676.21(f)(1) through (4), and (g)); and § 679.42(i), (i)(1), and (i)(2), (j), (j)(1), and (j)(4) (previously found in § 676.22(i), (i)(1), (i)(2), (j), (j)(1), and (j)(4)).

Processing Fish Other Than IFQ Halibut or IFQ Sablefish

A new paragraph, § 679.42(k), is added to allow processing of fish other than IFQ halibut or IFQ sablefish on board the harvesting vessel by persons authorized to harvest IFQ sablefish based on an annual allocation of IFQ assigned to vessel categories B or C. Without this change, fish other than IFQ halibut or IFQ sablefish could not be processed on board the harvesting vessel if, along with that fish, IFQ sablefish were harvested by a person authorized to harvest IFQ sablefish based on an annual allocation of IFQ assigned to vessel categories B and C. Prohibiting the processing of fish other than IFQ halibut or IFQ sablefish on category B or C vessels resulted in the unanticipated waste of fish caught incidentally with IFQ sablefish, because sablefish can be preserved longer on ice than some incidentally-caught fish (e.g., Pacific cod). The longer ''shelf life'' of fresh sablefish allowed a typical sablefish longline trip to exceed the time period in which fish other than IFQ halibut or IFQ sablefish maintain sufficient quality to market as fresh fish. This often resulted in the discard of some or all incidentally caught fish. Also, persons are required to retain Pacific cod and rockfish caught incidentally to IFQ sablefish. This forces persons authorized to harvest IFQ sablefish, based on an annual allocation of IFQ assigned to vessel categories B and C, to keep Pacific cod and rockfish caught incidentally with IFQ sablefish, even though the value of the Pacific cod and rockfish is diminished during a long sablefish trip. Amendments 33 and 37 will eliminate the lost revenue of

discarding, or landing poor quality, fish other than IFQ halibut and IFQ sablefish due to the repealed prohibition on processing fish other than IFQ halibut and IFQ sablefish.

Section § 679.42(i)(2) (previously found in § 676.22(i)(3)) was unnecessary with the addition of § 679.42(k) and the removal of the definitions of ''freezer vessel'' and ''catcher vessel'' (as the term ''catcher vessel'' applies to the IFQ program). Furthermore, some of the provisions in § 679.42(i)(2) (previously found in § 676.22(i)(3)) were contrary to the purposes of Amendments 33 and 37. For example, a person could not harvest IFQ sablefish with IFQ assigned to vessel categories B or C if ''frozen or otherwise processed fish products'' were on the vessel, regardless of whether the frozen or otherwise processed fish were IFQ halibut or IFQ sablefish, or fish other than those species. The intent of this action is to allow persons to harvest IFQ sablefish with IFQ assigned to vessel categories B or C even if frozen or otherwise processed fish other than IFQ halibut or IFQ sablefish are on board the harvesting vessel.

The authorization to process fish other than IFQ halibut or IFQ sablefish does not extend to persons authorized to harvest IFQ halibut based on an annual allocation of IFQ assigned to vessel categories B, C, or D. The Council declined to extend the IFQ sablefish exemption to IFQ halibut due to the socio-economic differences between the fisheries. The halibut fishery characteristically is prosecuted by local vessels that do not have on-board processing capabilities. Amendments 33 and 37 are not intended to change this characteristic of the halibut fishery. Also, not extending the authorization to process fish other than IFQ sablefish and IFQ halibut to persons authorized to harvest IFQ halibut based on an annual allocation of IFQ assigned to vessel categories B, C, or D is consistent with one of the objectives of the IFQ program (i.e., to maintain a diverse fleet where all segments continue to exist along with the social structures associated with those segments). The prohibition on processing on board the harvesting vessel by persons harvesting IFQ species with IFQ assigned to specific vessel categories is one method of accomplishing that objective. The Council expressed concern that, if the owners of large, industrial-type vessels that process their catch could harvest IFQ species with IFQ assigned to vessel categories B, C, or D while processed fish are on board, these owners would acquire the majority of the ''catcher vessel'' QS. The result would be an increase in harvesting of IFQ species on large, industrial-type vessels that process their catch and a decrease in harvesting of IFQ species on small vessels that do not have processing capabilities. These small vessels, which do not have processing capabilities, are more likely to make landings at local coastal communities. The Council determined that phasing out small vessels that do not have processing capabilities and that would not be able to compete with the large, industrial-type vessels that process their catch for available IFQ would have detrimental socio-economic impacts on coastal communities. This was especially true for halibut IFQ. Many coastal communities rely on the delivery of halibut harvested by persons operating small vessels that do not have processing capabilities as a source of revenue.

Response to Comments

A comment was received from the Office of the Chief Counsel for Advocacy, Small Business Administration, regarding the analysis for the Regulatory Flexibility Act (RFA) that is contained in the EA/RIR. The comment concluded that the agency's language in section 4.1, Economic Impact on Small Entities, was ambiguous because the language stated that the action would positively affect sablefish catcher vessel QS holders. The Office of the Chief Counsel concluded that this ambiguity made it difficult for a reader of the analysis to determine whether the action would have a significant impact on a substantial number of small entities.

NMFS's determination was that this action will not have a significant impact on a substantial number of small entities. Actions can have an adverse economic impact, a positive economic impact, or a neutral economic impact on small entities. In this case, the action will have a positive impact. However, the positive economic effects of this action mentioned in section 4.1 will not have a significant impact on a substantial number of small entities.

Also, a comment was received from the U.S. Coast Guard stating that all enforcement and safety concerns with these amendments were addressed by the proposed rule.

Changes to the Proposed Rule

The proposed rule to implement Amendments 33 and 37 was published in the Federal Register on April 2, 1996 (61 FR 14547) as a proposed amendment to 50 CFR part 676 (Limited Access Management of Federal Fisheries In and Off of Alaska). Effective July 1, part 676 will be integrated with part 679. The final rule implementing Amendments 33 and 37 will become effective July 26, 1996; and consequently after 50 CFR part 676 has been integrated with 50 CFR part 679. Accordingly, the final rule to implement Amendments 33 and 37 has been revised to make the appropriate amendments to 50 CFR part 679 instead of 50 CFR part 676.

A new paragraph (f)(16) was added to § 679.7 to specifically prohibit the processing of fish on board a vessel using IFQ assigned to vessel categories B, C, or D, except as provided in new § 679.42(k). New section 679.42(k) authorizes limited processing of species other than IFQ sablefish and IFQ halibut. The addition of paragraph (f)(16) will eliminate any confusion caused by removing § 676.42(i)(2) (previously found in § 676.22(i)(3)).

A cite to § 676.22(i)(3) has been eliminated from proposed § 676.22(a) (now § 679.42(a)) because § 676.22(i)(3) itself is eliminated by the new rule.

Classification

An EA/RIR was prepared for this rule that describes the management background, the purpose and need for action, the management action alternatives, and the social impacts of the alternatives. The EA/RIR estimates the total number of small entities affected by this action, and analyzes the economic impact on those small entities. Based on the analysis, it was determined that this rule does not have a significant economic impact on a substantial number of small entities. Copies of the EA/RIR can be obtained from NMFS (see **ADDRESSES**).

This rule has been determined to be not significant for purposes of E.O. 12866.

List of Subjects in 50 CFR Part 679

Fisheries, Reporting and recordkeeping requirements.

Dated: June 20, 1996.

Henry R. Beasley,

Acting Assistant Administrator for Fisheries, National Marine Fisheries Service.

For the reasons set out in the preamble, 50 CFR part 679 is amended as follows:

PART 679—FISHERIES OF THE EXCLUSIVE ECONOMIC ZONE OFF ALASKA

1. The authority citation for 50 CFR part 679 continues to read as follows:

Authority: 16 U.S.C. 773 *et seq.* and 1801 *et seq.*

2. In § 679.2, the definition of ''Freezer vessel'' is removed, and paragraph (3) under the definition of

''Catcher vessel'' is removed and paragraph (3) is reserved.

3. In § 679.7, paragraph (f)(13) is revised and a new paragraph (f)(16) is added to read as follows:

§ 679.7 General prohibitions.

* * * * *

(13) Possess processed and unprocessed IFQ species on board a vessel during the same trip except when fishing exclusively with IFQ derived from vessel category A QS;

* * * * *

(16) Process fish on board a vessel on which a person aboard has unused IFQ derived from QS issued to vessel categories B, C, or D, except as provided in § 679.42(k) of this part;

* * * * *

4. In § 679.40, paragraph (a)(5)(ii) is revised to read as follows:

§ 679.40 Sablefish and halibut QS.

* * * * *

(a) * * *

(5) * * *

(ii) *Vessel categories.* Quota share assigned to vessel categories include:

(A) Category A quota share, which authorizes an IFQ cardholder to catch and process IFQ species on a vessel of any length.

(B) Category B quota share, which authorizes an IFQ cardholder to catch IFQ species on a vessel greater than 60 ft (18.3 m) in length overall.

(C) Category C quota share, which authorizes an IFQ cardholder to catch IFQ sablefish on a vessel less than or equal to 60 ft (18.3 m) in length overall, or which authorizes an IFQ cardholder to catch IFQ halibut on a vessel greater than 35 ft (10.7 m) but less than or equal to 60 ft (18.3 m) in length overall; and

(D) Category D quota share, which authorizes an IFQ cardholder to catch IFQ halibut on a vessel less than or equal to 35 ft (10.7 m) in length overall.

* * * * *

5. In § 679.41, paragraphs (g) and (h) are revised to read as follows:

§ 679.41 Transfer of QS and IFQ.

* * * * *

(g) *Transfer restrictions, catcher vessel QS.* (1) Except as provided in paragraph (f) or paragraph (g)(2) of this section, only persons who are IFQ crew members, or that were initially assigned QS assigned to vessel categories B, C, or D, and meet the other requirements in this section may receive QS assigned to vessel categories B, C, or D.

(2) Except as provided in paragraph (g)(3) of this section, only persons who are IFQ crew members may receive QS assigned to vessel categories B, C, or D in IFQ regulatory area 2C for halibut or in the IFQ regulatory area east of 140° W. long. for sablefish.

(3) Individuals who were initially issued QS assigned to vessel categories B, C, or D may transfer that QS to a corporation that is solely owned by the same individual. Such transfers of QS assigned to vessel categories B, C, or D in IFQ regulatory area 2C for halibut or in the IFQ regulatory area east of 140° W. long. for sablefish will be governed by the use provisions of § 679.42(i); the use provisions pertaining to corporations at § 679.42(j) shall not apply.

(4) The Regional Director will not approve an Application for Transfer of QS assigned to vessel categories B, C, or D subject to a lease or any other condition of repossession or resale by the person transferring QS, except as provided in paragraph (h) of this section, or by court order, operation of law, or as part of a security agreement. The Regional Director may request a copy of the sales contract or other terms and conditions of transfer between two persons as supplementary information to the transfer application.

(h) *Leasing QS (applicable until January 2, 1998).* A person may not use IFQ resulting from a QS lease for harvesting halibut or sablefish until an Application for Transfer complying with the requirements of paragraph (b) of this section and the lease agreement are approved by the Regional Director. A person may lease no more than 10 percent of that person's total QS assigned to vessel categories B, C, or D for any IFQ species in any IFQ regulatory area to one or more persons for any fishing year. After approving the Application for Transfer, the Regional Director shall change any IFQ accounts affected by an approved QS lease and issue all necessary IFQ permits. QS leases must comply with all transfer requirements specified in this section. All leases will expire on December 31 of the calendar year for which they are approved.

* * * * *

6. In § 679.42, paragraphs (a), (i), and (j) introductory text, (j)(1), and (j)(4), are revised and paragraph (k) is added to read as follows:

§ 679.42 Limitations on use of QS and IFQ.

(a) *IFQ regulatory area.* The QS or IFQ specified for one IFQ regulatory area and vessel category must not be used in a different IFQ regulatory area or vessel category except as provided in § 679.41(i)(1).

* * * * *

(i) *Use of IFQ resulting from QS assigned to vessel categories B, C, or D by individuals.* In addition to the requirements of paragraph (c) of this section, IFQ cards issued for IFQ resulting from QS assigned to vessel categories B, C, or D must be used only by the individual who holds the QS from which the associated IFQ is derived, except as provided in paragraph (i)(1) of this section.

(1) An individual who receives an initial allocation of QS assigned to vessel categories B, C, or D does not have to be on board and sign IFQ landing reports if that individual owns the vessel on which IFQ sablefish or halibut are harvested, and is represented on the vessel by a master employed by the individual who received the initial allocation of QS.

(2) The exemption provided in paragraph (i)(1) of this section does not apply to individuals who receive an initial allocation of QS assigned to vessel categories B, C, or D for halibut in IFQ regulatory area 2C or for sablefish QS in the IFQ regulatory area east of 140° W. long., and this exemption is not transferrable.

(j) *Use of IFQ resulting from QS assigned to vessel categories B, C, or D by corporations and partnerships.* A corporation or partnership that receives an initial allocation of QS assigned to vessel categories B, C, or D may use the IFQ resulting from that QS and any additional QS acquired within the limitations of this section provided the corporation or partnership owns the vessel on which its IFQ is used, and it is represented on the vessel by a master employed by the corporation or partnership that received the initial allocation of QS. This provision is not transferrable and does not apply to QS assigned to vessel categories B, C, or D for halibut in IFQ regulatory area 2C or for sablefish in the IFQ regulatory area east of 140° W. long. that is transferred to a corporation or partnership. Such transfers of additional QS within these areas must be to an individual pursuant to § 676.41(c) of this part and be used pursuant to paragraphs (c) and (i) of this section.

(1) A corporation or partnership, except for a publicly-held corporation, that receives an initial allocation of QS assigned to vessel categories B, C, or D loses the exemption provided under paragraph (j) of this section on the effective date of a change in the corporation or partnership from that which existed at the time of initial allocation.

* * * * *

(4) QS assigned to vessel categories B, C, or D and IFQ resulting from that QS held in the name of a corporation or

partnership that changes, as defined in this paragraph, must be transferred to an individual, as prescribed in § 679.41 of this part, before it may be used at any time after the effective date of the change.

(k) *Processing of fish other than IFQ halibut and IFQ sablefish*. Fish other than IFQ halibut or IFQ sablefish may be processed on a vessel on which persons:

(1) Are authorized to harvest IFQ halibut or IFQ sablefish based on allocations of IFQ resulting from QS assigned to vessel category A; or

(2) Are authorized to harvest IFQ sablefish based on allocations of IFQ resulting from QS assigned to vessel categories B or C unless any person aboard the vessel is authorized to harvest IFQ halibut based on allocations of IFQ resulting from QS assigned to vessel categories B, C, or D.

[FR Doc. 96–16379 Filed 6–26–96; 8:45 am]

BILLING CODE 3510–22–W

50 CFR Part 679

[Docket No. 960129019–6019–01, I.D. 062196C]

Groundfish of the Bering Sea and Aleutian Islands Area; Pacific Cod by Vessels Using Trawl Gear

AGENCY: National Marine Fisheries Service (NMFS), National Oceanic and Atmospheric Administration, Commerce.

ACTION: Closure.

SUMMARY: NMFS is closing the directed fishery for Pacific cod by vessels using trawl gear in the Bering Sea and Aleutian Islands management area (BSAI). This action is necessary to prevent exceeding the first seasonal bycatch allowance of Pacific halibut apportioned to the trawl Pacific cod fishery in the BSAI.

EFFECTIVE DATE: 12 noon, Alaska local time (A.l.t.), June 23, 1996, until 12 noon, A.l.t., October 25, 1996.

FOR FURTHER INFORMATION CONTACT: Mary Furuness, 907–586–7228.

SUPPLEMENTARY INFORMATION: The groundfish fishery in the BSAI exclusive economic zone is managed by NMFS according to the Fishery Management Plan for the Groundfish Fishery of the Bering Sea and Aleutian Islands Area (FMP) prepared by the North Pacific Fishery Management Council under authority of the Magnuson Fishery Conservation and Management Act. Fishing by U.S. vessels is governed by regulations implementing the FMP at subpart H of 50 CFR parts 600 and 679.

The first seasonal bycatch allowance of Pacific halibut for the BSAI trawl Pacific cod fishery category, which is defined at § 675.21(b)(1)(iii)(E), was established by the Final 1996 Harvest Specifications of Groundfish (61 FR 4311, February 5, 1996) as 1,585 metric tons (mt). This fishery was previously closed on May 14, 1996, with the expectation that the first seasonal allocation had been taken (61 FR 24730, May 16, 1996). The fishery was subsequently opened on June 14, 1996, when NMFS determined that 89 mt of halibut mortality remained in the allocation (61 30544, June 17, 1996).

The Director, Alaska Region, NMFS, has determined, in accordance with § 679.21(e)(1)(iv), that the first seasonal bycatch allowance of Pacific halibut apportioned to the trawl Pacific cod fishery in the BSAI has been caught. Therefore, NMFS is prohibiting the directed fishery for Pacific cod by vessels using trawl gear in the BSAI.

Maximim retainable bycatch amounts for applicable gear types may be found in the regulations at § 679.20(e).

Classification

This action is taken under 50 CFR 679.20 and is exempt from review under E.O. 12866.

Authority: 16 U.S.C. 1801 *et seq.*

Dated: June 21, 1996.

Donald J. Leedy,

Acting Director, Office of Fisheries Conservation and Management, National Marine Fisheries Service.

[FR Doc. 96–16373 Filed 6–21–96; 4:33 pm]

BILLING CODE 3510–22–M

50 CFR Part 679

[Docket No. 960129018–6018–01; I.D. 061996A]

Groundfish of the Gulf of Alaska; Atka Mackerel in the Western Regulatory Area

AGENCY: National Marine Fisheries Service (NMFS), National Oceanic and Atmospheric Administration (NOAA), Commerce.

ACTION: Modification of a closure.

SUMMARY: NMFS is opening the directed fishery for Atka mackerel in the Western Regulatory Area of the Gulf of Alaska (GOA) to allow a 24–hour directed fishery. This action is necessary to fully utilize the total allowable catch (TAC) of Atka mackerel in that area.

EFFECTIVE DATES: 12 noon, Alaska local time (A.l.t.), July 1, 1996, until 12 noon, A.l.t., July 2, 1996, the directed fishery for Atka mackerel in the Western Regulatory Area of the GOA is open; and effective 12 noon A.l.t. July 2, 1996, until 12 midnight, A.l.t. December 31, 1996, the directed fishery for Atka mackerel in the Western Regulatory Area of the GOA is closed.

FOR FURTHER INFORMATION CONTACT: Mary Furuness, 907–586-7228.

SUPPLEMENTARY INFORMATION: The groundfish fishery in the GOA exclusive economic zone is managed by NMFS according to the Fishery Management Plan for Groundfish of the Gulf of Alaska (FMP) prepared by the North Pacific Fishery Management Council under authority of the Magnuson Fishery Conservation and Management Act. Fishing by U.S. vessels is governed by regulations implementing the FMP at Subpart H of 50 CFR part 600 and 50 CFR part 679.

In accordance with § 679.20 (c)(3)(ii), the annual TAC for Atka mackerel in the Western Regulatory Area of the GOA, was established by the Final 1996 Harvest Specifications of Groundfish (61 FR 4304, February 5, 1996) as 2,310 metric tons (mt). The Final 1996 Harvest Specifications of Groundfish also closed the directed fishery for Atka mackerel in the Western Regulatory Area of the GOA. See § 679.20(a)(8).

The Director, Alaska Region, NMFS (Regional Director), in accordance with § 679.20(d)(1), has determined that the TAC of Atka mackerel in the Western Regulatory Area of the GOA is sufficient to allow a directed fishery. Therefore, NMFS is opening the directed fishery for Atka mackerel in the Western Regulatory Area of the GOA at 12 noon, A.l.t., July 1, 1996. A directed fishing allowance of 2,110 mt is established with consideration that 200 mt will be taken as incidental catch in directed fishing for other species in the Western Regulatory Area

In accordance with § 679.20 (d)(1)(iii), the Regional Director has determined that the directed fishing allowance for Atka mackerel in the Western Regulatory Area will be reached within a 24–hour directed fishery for Atka mackerel. Consequently, NMFS is prohibiting directed fishing for Atka mackerel in the Western Regulatory Area of the GOA at 12 noon, A.l.t., July 2, 1996.

Maximum retainable bycatch amounts for applicable gear types may be found in the regulations at § 679.20(e).

Classification

This action is taken under § 679.20 and is exempt from review under E.O. 12866.

Authority: 16 U.S.C. 1801 *et seq.*

Dated: June 21, 1996.

Donald J. Leedy,

Acting Director, Office of Fisheries Conservation and Management, National Marine Fisheries Service.

[FR Doc. 96–16375 Filed 6–26–96; 8:45 am]

BILLING CODE 3510–22–F

Proposed Rules

Federal Register
Vol. 61, No. 125
Thursday, June 27, 1996

This section of the FEDERAL REGISTER contains notices to the public of the proposed issuance of rules and regulations. The purpose of these notices is to give interested persons an opportunity to participate in the rule making prior to the adoption of the final rules.

DEPARTMENT OF AGRICULTURE

Agricultural Marketing Service

7 CFR Part 928

[Docket No. FV–96–928–2]

Papayas Grown in Hawaii; Continuance Referendum

AGENCY: Agricultural Marketing Service, USDA.

ACTION: Referendum order.

SUMMARY: This document directs that a referendum be conducted among eligible growers of Hawaiian papayas to determine whether they favor continuance of the marketing order regulating the handling of papayas grown in the production area.

DATES: The referendum will be conducted from July 1 through July 26, 1996. The representative production period is from July 1, 1994, through June 30, 1995.

ADDRESSES: Copies of the text of the aforesaid marketing order may be obtained from the office of the referendum agent at 2202 Monterey Street, Suite 102B, Fresno, California 93721, or the Office of the Docket Clerk, Marketing Order Administration Branch, Fruit and Vegetable Division, AMS, USDA, P.O. Box 96456, Room 2525–S, Washington, D.C., 20090–6456.

FOR FURTHER INFORMATION CONTACT: Martin J. Engeler, California Marketing Field Office, Marketing Order Administration Branch, Fruit and Vegetable Division, Agricultural Marketing Service, U.S. Department of Agriculture, 2202 Monterey Street, Suite 102B, Fresno, California, 93721; telephone: (209) 487–5901; or Charles L. Rush, Marketing Order Administration Branch, Fruit and Vegetable Division, Agricultural Marketing Service, U.S. Department of Agriculture, room 2522–S, P.O. Box 96456, Washington, D.C. 20090–6456; telephone: (202) 720–2431.

SUPPLEMENTARY INFORMATION: Pursuant to Marketing Order No. 928 (7 CFR Part 928), hereinafter referred to as the ''order,'' and the applicable provisions of the Agricultural Marketing Agreement Act of 1937, as amended (7 U.S.C. 601–674), hereinafter referred to as the ''Act,'' it is hereby directed that a referendum be conducted to ascertain whether continuance of the order is favored by growers. The referendum shall be conducted during the period July 1 through July 26, 1996, among growers in the production area. Only growers who were engaged in the production of papayas during the period July 1, 1994, through June 30, 1995, may participate in the continuance referendum.

The Secretary of Agriculture has determined that continuance referenda are an effective means for ascertaining whether growers favor continuation of marketing order programs. The Secretary would consider termination of the order if less than two-thirds of the growers voting in the referendum and growers of less than two-thirds of the volume of papayas represented in the referendum favor continuance. In evaluating the merits of continuance versus termination, the Secretary would not only consider the results of the continuance referendum. The Secretary would also consider all other relevant information concerning the operation of the order and the relative benefits and disadvantages to growers, handlers, and consumers in order to determine whether continued operation of the order would tend to effectuate the declared policy of the Act.

In any event, section 608c(16)(B) of the Act requires the Secretary to terminate an order whenever the Secretary finds that a majority of all growers favor termination, and such majority produced for market more than 50 percent of the commodity covered under such order.

The order requires that a referendum be held every 6 years to determine whether growers favor continuance of their marketing order program. The most recent referendum was held in May 1993. The next referendum was scheduled for 1999. However, due to concerns regarding the operation of the order including program compliance, the Department has determined that a referendum should be held at this time to ascertain whether growers favor continuance of the order.

In accordance with the Paperwork Reduction Act of 1995 (44 U.S.C. Chapter 38), the ballot materials to be used in the referendum herein ordered have been submitted to and approved by the Office of Management and Budget (OMB) and have been assigned OMB No. 0581–0102. It has been estimated that it will take an average of 20 minutes for each of the approximately 400 growers of papayas to participate in the voluntary referendum balloting. Ballots postmarked after July 26, 1996 will not be included in the vote tabulation.

Martin J. Engeler, California Marketing Field Office, Fruit and Vegetable Division, Agricultural Marketing Service, USDA, is hereby designated as the referendum agent of the Secretary of Agriculture to conduct such referendum. The procedure applicable to the referendum shall be the ''Procedure for the Conduct of Referenda in Connection With Marketing Orders for Fruits, Vegetables, and Nuts Pursuant to the Agricultural Marketing Agreement Act of 1937, as Amended'' (7 CFR Part 900.400 *et seq.*).

Ballots will be mailed to all known growers and may also be obtained from the referendum agent and from his appointees at the above address.

List of Subjects in 7 CFR Part 928

Marketing agreements, Papayas, Reporting and recordkeeping requirements.

Authority: Agricultural Marketing Agreement Act of 1937, 48 Stat. 31, as amended; 7 U.S.C. 601–674.

Dated: June 24, 1996.

Michael V. Dunn,

Assistant Secretary, Marketing and Regulatory Programs.

[FR Doc. 96–16431 Filed 6–26–96; 8:45 am]

BILLING CODE 3410–02–P

NUCLEAR REGULATORY COMMISSION

10 CFR Part 35

[Docket No. PRM–35–14]

IsoStent, Inc., Receipt of a Petition for Rulemaking

AGENCY: Nuclear Regulatory Commission.

ACTION: Petition for rulemaking; Notice of receipt.

SUMMARY: The Nuclear Regulatory Commission (NRC) has received and

requests public comment on a petition for rulemaking filed by IsoStent, Inc. The petition has been docketed by the Commission and assigned Docket No. PRM–35–14. The petitioner requests that the NRC amend its regulations by adding a new section to address permanently implanted intraluminal stents, including phosphorus-32 and strontium-89 radioisotope stents. These stents would be permanently implanted in the patient's vessels and arteries. The petitioner also requests that the NRC add a new section to specify training and experience requirements for qualified physicians responsible for placing radioisotope stents in patients. The petitioner believes the suggested amendments would address an innovative approach for the treatment of stenotic arteries and vessels with low-activity, beta-emitting stents.

DATES: Submit comments by September 10, 1996. Comments received after this date will be considered if it is practical to do so, but assurance of consideration cannot be given except to those comments received on or before this date.

ADDRESSES: For a copy of the petition, write: Rules Review Section, Rules Review and Directives Branch, Division of Freedom of Information and Publications Services, Office of Administration, U.S. Nuclear Regulatory Commission, Washington, DC 20555–0001.

Submit comments to: Secretary, U.S. Nuclear Regulatory Commission, Washington, DC 20555–0001. Attention: Docketing and Service Branch.

Deliver comments to 11555 Rockville Pike, Rockville, Maryland, between 7:45 am and 4:15 pm on Federal workdays.

For information on sending comments by electronic format, see ''Electronic Access,'' under the Supplementary Information section of this notice.

FOR FURTHER INFORMATION CONTACT: Michael T. Lesar, Office of Administration, U.S. Nuclear Regulatory Commission, Washington, DC 20555–0001. Telephone: 301–415–7163 or Toll Free: 800–368–5642, or E-mail MTL@NRC.GOV.

SUPPLEMENTARY INFORMATION:

Receipt of Petition for Rulemaking

The NRC received the IsoStent, Inc., petition for rulemaking on May 10, 1996. The petition is dated May 9, 1996, and was docketed as PRM–35–14 on May 20, 1996.

Background

The petitioner states that preliminary data indicates that stents, combined with a low-activity, beta-emitting source (less than 3 microcuries per millimeter of length), may significantly reduce restenosis of the vessel following therapeutic intervention. The petitioner refers to a source that estimates total societal costs of restenosis in the United States is somewhere between $800 million and $2 billion a year.

The petitioner states that it is important to ensure that the stents are appropriately classified and regulated because radioactive stents could significantly benefit the healthcare system and the quality of life of patients suffering from restenosis of the vessel following therapeutic intervention. The petitioner believes, after reviewing existing NRC regulations pertaining to the medical uses of byproduct materials, that a new section is necessary to address permanently implanted radioisotope intraluminal stents. The petitioner states that standard coronary stents, 15 millimeters in length, would contain less than 20 microcuries (740 kBq) of beta-emitting isotope, and longer and larger diameter stents for other anatomical sites would contain less than 3 microcuries of beta-emitting isotope per millimeter of length.

Petitioner's Suggested Amendments

The petitioner requests that the NRC amend its regulations by adding a new section that would be applicable to permanently implanted intraluminal stents. The new section would govern stents that include phosphorus-32 and strontium-89 radioisotope sealed sources. These sealed sources would have removable contamination of less than 1 percent of the total device activity. The petitioner further requests a new section be created on training and experience requiring the stents to be placed in the patient by a licensed physician who—

(1) Is certified either by the American Board of Radiology in diagnostic radiology with additional specialization in intravascular radiology or by the American Board of Internal Medicine with special competence in cardiology; and

(2) Has received 8 hours of classroom and laboratory training in the basic handling of beta-emitting sources.

Discussion of the Petition

The petitioner states that the existing regulations do not include phosphorus-32 and strontium-89 as sealed sources for medical therapeutic use. Therefore, the petitioner believes that these sources would be regulated under sources used for traditional brachytherapy. The petitioner believes this category is not appropriate to control low-activity, beta-emitting stents for the following reasons:

1. Training and Competency Requirements.

Low-activity, beta-emitting stents differ significantly from those sources that are used for traditional brachytherapy. Traditional brachytherapy sources have higher activity and require significant dose calculations. To be used safely, traditional brachytherapy sources require extensive knowledge in radiobiology, radiation physics, and radiation protection. Low-activity beta-emitting stents do not require this same level of radiation expertise because they have significantly lower radioactivity levels and are permanently implanted devices that do not require any calculation of dose or dwell time.

Under current NRC regulations, any procedure using a source defined under § 35.400 would require the supervision of a certified radiation oncologist. Stents are currently prescribed and implanted by physicians trained in cardiovascular specialties. Once given required training in the proper handling of these low dose-rate, beta-emitting sources, these physicians could safely and effectively implant radioactive stents. Access to low-activity, beta-emitting stents should be allowed for those physicians who are already certified for stent implantation specialties. Requiring the additional oversight of a radiation oncologist for these stent applications could potentially limit the accessibility of this technology and add significant cost to each procedure. Such a requirement would unnecessarily burden the medical system.

2. Safety Requirements

Low-activity, beta-emitting stents can be shielded with approximately 1 centimeter of plastic material and have half-lives of less than two months, and, when shielded, should not pose a significant hazard to the public or medical staff. The radioactive stent remains within the shield until it is passed into the patient by means of a stent delivery catheter. Once in the patient, these beta-emitters are shielded by the patient's tissues, and because of their shorter half-lives, do not represent a significant long-term risk to the public or to medical personnel. A precedent for the release of patients with such short half-life sources has been set with sources such as iodine-125 seeds having a 60-day half-life and 10^3 to 10^4 times higher activity per seed, as well as with the more penetrating photon radiation.

3. Facility Licensing Requirements

Medical facilities without a broad-scope license also should have access to low-activity, beta-emitting stents, as do facilities with a broad-scope license under current regulations. There are a large number of medical facilities that currently implant stents, but do not meet these licensing requirements. Therefore, maintaining these requirements also could limit the accessibility of this technology.

The petitioner believes that these suggested changes would have a potentially large benefit to patients and the healthcare system.

Electronic Access

Comments may be submitted electronically in either ASCII text or WordPerfect format (version 5.1 or later) by calling the NRC Electronic Bulletin Board (BBS) on FedWorld. The bulletin board may be accessed using a personal computer, a modem, and one of the commonly available communications software packages, or directly via Internet. Background documents on the petition for rulemaking also are available, as practical, for downloading and viewing on the bulletin board.

If using a personal computer and modem, the NRC rulemaking subsystem on FedWorld can be accessed directly by dialing the toll free number 800–303–9672. Communication software parameters should be set as follows: parity to none, data bits to 8, and stop bits to 1 (N,8,1). Using ANSI or VT–100 terminal emulation, the NRC rulemaking subsystem can then be accessed by selecting the ''Rules Menu'' option from the ''NRC Main Menu.'' Users will find the ''FedWorld Online User's Guides'' particularly helpful. Many NRC subsystems and data bases also have a ''Help/Information Center'' option that is tailored to the particular subsystem.

The NRC subsystem on FedWorld also can be accessed by a direct-dial telephone number for the main FedWorld BBS, 703–321–3339, or by using Telnet via Internet: fedworld.gov. If using 703–321–3339 to contact FedWorld, the NRC subsystem will be accessed from the main FedWorld menu by selecting the ''Regulatory, Government Administration and State Systems,'' then selecting ''Regulatory Information Mall.'' At that point, a menu will be displayed that has an option ''U.S. Nuclear Regulatory Commission'' that will take the user to the NRC online main menu. The NRC online area also can be accessed directly by typing ''/go nrc'' at a FedWorld command line. If NRC is accessed from FedWorld's main menu, the user may return to FedWorld by selecting the ''Return to FedWorld'' option from the NRC online main menu. However, if NRC is accessed at FedWorld by using NRC's toll-free number, the user will have full access to all NRC systems, but will not have access to the main FedWorld system.

If FedWorld is contacted using Telnet, the user will see the NRC area and menus, including the Rules Menu. Although the user will be able to download documents and leave messages, he or she will not be able to write comments or upload files (comments). If FedWorld is contacted using FTP, all files can be accessed and downloaded, but uploads are not allowed. Only a list of files will be shown without descriptions (normal Gopher look). An index file listing all files within a subdirectory, with descriptions, is available. There is a 15-minute time limit for FTP access.

Although FedWorld also can be accessed through the World Wide Web, like FTP, that mode only provides access for downloading files and does not display the NRC Rules Menu.

For more information on NRC bulletin boards, call Mr. Arthur Davis, Systems Integration and Development Branch, NRC, Washington, DC 20555–0001, telephone 301–415–5780; E-mail AXD3@nrc.gov.

Single copies of this petition for rulemaking may be obtained by written request or telefax (301–415–5144) from the Rules Review and Directives Branch, Division of Freedom of Information and Publications Services, Office of Administration, Mail Stop T6–D59, U.S. Nuclear Regulatory Commission, Washington DC 20555–0001. Certain documents related to this petition for rulemaking, including comments received, may be examined at the NRC Public Document Room, 2120 L Street NW. (Lower Level), Washington, DC. These same documents also may be viewed and downloaded electronically via the Electronic Bulletin Board established by NRC for this petition for rulemaking as indicated above.

Dated at Rockville, Maryland, this 21st day of June 1996.

For the Nuclear Regulatory Commission.

John C. Hoyle,

Secretary of the Commission.

[FR Doc. 96–16397 Filed 6–26–96; 8:45 am]

BILLING CODE 7590–01–P

DEPARTMENT OF TRANSPORTATION

Federal Aviation Administration

14 CFR Part 71

[Airspace Docket No. 95–AWP–40]

Proposed Establishment of Class E Airspace; Coolidge, AZ

AGENCY: Federal Aviation Administration (FAA), DOT.

ACTION: Notice of proposed rulemaking.

SUMMARY: This notice proposes to establish Class E airspace area at Coolidge, AZ. The development of a Global Positioning System (GPS) Standard Instrument Approach Procedure (SIAP) to Runway (RWY) 23 and a VHF Omnidirectional Range/Distance Measuring Equipment (VOR/DME) to RWY 05 has made this proposal necessary. The intended effect of this proposal is to provide adequate controlled airspace for Instrument Flight Rules (IFR) operations at Coolidge Municipal Airport, Coolidge, AZ.

DATES: Comments must be received on or before July 29, 1996.

ADDRESSES: Send comments on the proposal in triplicate to: Federal Aviation Administration, Attn: Manager, Operations Branch, AWP–530, Docket No. 95–AWP–40, Air Traffic Division, P.O. Box 92007, Worldway Postal Center, Los Angeles, California 90009.

The official docket may be examined in the Office of the Assistant Chief Counsel, Western Pacific Region, Federal Aviation Administration, Room 6007, 15000 Aviation Boulevard, Lawndale, California 90261.

An informal docket may also be examined during normal business at the Office of the Manager, Operations Branch, Air Traffic Division at the above address.

FOR FURTHER INFORMATION CONTACT: William Buck, Airspace Specialist, Operations Branch, AWP–530, Air Traffic Division, Western-Pacific Region, Federal Aviation Administration, 15000 Aviation Boulevard, Lawndale, California, 90261, telephone (310) 725—6556..

SUPPLEMENTARY INFORMATION:

Comments Invited

Interested parties are invited to participate in this proposed rulemaking by submitting such written data, views, or arguments as they may desire. Comments that provide the factual basis supporting the views and suggestions presented are particularly helpful in developing reasoned regulatory

decisions on the proposal. Comments are specifically invited on the overall regulatory, aeronautical, economic, environmental, and energy-related aspects of the proposal. Communications should identify the airspace docket number and be submitted in triplicate to the address listed above. Commenters wishing the FAA to acknowledge receipt of their comments on this notice must submit with the comments a self-addressed, stamped postcard on which the following statement is made: ''Comments to Airspace Docket No. 95–AWP–40.'' The postcard will be date/time stamped and returned to the commenter. All communications received on or before the specified closing date for comments will be considered before taking action on the proposed rule. The proposal contained in this notice may be changed in light of comments received. All comments submitted will be available for examination in the Operations Branch, Air Traffic Division, at 15000 Aviation Boulevard, Lawndale, California 90261, both before and after the closing date for comments. A report summarizing each substantive public contact with FAA personnel concerned with this rulemaking will be filed in the docket.

Availability of NPRM

Any person may obtain a copy of this Notice of Proposed Rulemaking (NPRM) by submitting a request to the Federal Aviation Administration, Operations Branch, P.O. Box 92007, Worldway Postal Center, Los Angeles, California 90009. Communications must identify the notice number of this NPRM. Persons interested in being placed on a mailing list for future NPRM's should also request a copy of Advisory Circular No. 11–2A, which describes the application procedures.

The Proposal

The FAA is considering an amendment to part 71 of the Federal Aviaiton Regulations (14 CFR part 71) by establishing Class E airspace area at Coolidge, AZ. The development of a GPS and VOR/DME SIAP at Coolidge Municipal Airport has made this proposal necessary. The intended effect of this proposal is to provide adequate Class E airspace for aircraft executing the GPS RWY 23 and VOR/DME RWY 05 SIAP at Coolidge Municipal Airport, Coolidge, AZ. Class E airspace designations for airspace areas extending upward from 700 feet or more above the surface of the earth are published in Paragraph 6005 of FAA Order 7400.9C dated August 17, 1995, and effective September 16, 1995, which is incorporated by reference in 14 CFR 71.1. The Class E airspace designation listed in this document would be published subsequently in this Order.

The FAA has determined that this proposed regulation only involves an established body of technical regulations for which frequent and routine amendments are necessary to keep them operationally current. Therefore, this proposed regulation—(1) is not a ''significant regulatory action'' under Executive Order 12866; (2) is not a ''significant rule'' under DOT Regulatory Policies and Procedures (44 FR 10034; February 26, 1979); and (3) does not warrant preparation of a Regulatory Evaluation as the anticipated impact is so minimal. Since this is a routine matter that will only affect air traffic procedures and air navigation, it is certified that this proposed rule would not have a significant economic impact on a substantial number of small entities under the criteria of the Regulatory Flexibility Act.

List of Subjects in 14 CFR Part 71

Airspace, Incorporation by reference, Navigation (air).

The Proposed Amendment

In consideration of the foregoing, the Federal Aviation Administration proposes to amend 14 CFR part 71 as follows:

PART 71—[AMENDED]

1. The authority citation for 14 CFR part 71 continues to read as follows:

Authority: 49 U.S.C. 106(g), 40103, 40113, 40120; E.O. 10854, 24 FR 9565, 3 CFR, 1959–1963 Comp., p. 389; 14 CFR 11.69.

§ 71.1 [Amended]

2. The incorporation by reference in 14 CFR 71.1 of the Federal Aviation Administration Order 7400.9C, Airspace Designations and Reporting Points, dated August 17, 1995, and effective September 16, 1995, is amended as follows:

Paragraph 6005 Class E airspace areas extending upward from 700 feet or more above the surface of the earth.

* * * * *

AWP AZ E5 Coolidge, AZ [New]

Coolidge Municipal Airport, AZ.
(Lat. 32°56′00″ N, long. 111°25′32″ W)

That airspace extending upward from 700 feet above the surface bounded by a line beginning at lat. 32°19′55″ N, long. 111°24′00″ W; thence west to lat. 32°17′20″ N, long. 111°44′30″ W; thence north to lat. 32°58′50″ N, long. 111°46′00″ W; thence northeast to lat. 33°08′10″ N, long. 111°10′20″ W; thence southeast to lat. 32°58′50″ N, long. 111°04′15″ W; thence southwest to the point of beginning.

* * * * *

Issued in Los Angeles, California, on June 13, 1996.

George D. Williams,

Manager, Air Traffic Division, Western-Pacific Region.

[FR Doc. 96–16412 Filed 6–26–96; 8:45 am]

BILLING CODE 4910–13–M

DEPARTMENT OF THE TREASURY

Internal Revenue Service

26 CFR Part 1

[CO–26–96]

RIN 1545–AU33

Regulations Under Section 382 of the Internal Revenue Code of 1986; Application of Section 382 in Short Taxable Years and With Respect to Controlled Groups

AGENCY: Internal Revenue Service (IRS), Treasury.

ACTION: Withdrawal of prior proposed rule, notice of proposed rulemaking by cross-reference to temporary regulations, and notice of public hearing.

SUMMARY: On January 29, 1991, proposed rules under section 382 of the Internal Revenue Code of 1986 (relating to limitations on net operating loss carryforwards and certain built-in losses following an ownership change) were filed with the Office of the Federal Register (CO–77–90; see 56 FR 4183; 1991–1 C.B. 749). The January, 1991, proposed rules are withdrawn and these proposed rules are issued in their place.

In the Rules and Regulations section of this issue of the Federal Register, the IRS is issuing temporary regulations relating to the application of section 382 in short taxable years and with respect to controlled groups. These regulations comply with the statutory direction under section 382(m) to prescribe such regulations. Additional rules amend certain aspects of § 1.382–2T relating principally to the separate tracking of the stock ownership of loss corporations that cease to exist following a merger or similar transactions.

The text of those temporary regulations also serves as the text of these proposed regulations. This document also provides a notice of public hearing on these proposed regulations.

DATES: Written comments must be received by September 25, 1996. Outlines of topics to be discussed at the

public hearing scheduled for Thursday, October 17, 1996, at 10 a.m. must be received by Thursday, September 26, 1996.

ADDRESSES: Send submissions to: CC:DOM:CORP:R (CO–26–96), room 5228, Internal Revenue Service, POB 7604, Ben Franklin Station, Washington, DC 20044. In the alternative, submissions may be hand delivered between the hours of 8 a.m. and 5 p.m. to: CC:DOM:CORP:R (CO–26–96), Courier's Desk, Internal Revenue Service, 1111 Constitution Avenue NW., Washington, DC. The public hearing will be held in the NYU Classroom, Room 2615, Internal Revenue Building, 1111 Constitution Avenue NW., Washington, DC.

FOR FURTHER INFORMATION CONTACT: Concerning the regulations, David B. Friedel, (202) 622–7550; concerning submissions and the hearing, Evangelista Lee, (202) 622–7190 (not toll-free numbers).

SUPPLEMENTARY INFORMATION:

Paperwork Reduction Act

The collection of information contained in this notice of proposed rulemaking has been reviewed and approved by the Office of Management and Budget in accordance with the Paperwork Reduction Act (44 U.S.C. 3507) under the control number 1545–1434. Proposed § 1.382–8(h) requires a response from certain corporations that are members of controlled groups. The IRS requires this information to assure compliance with section 382(m)(5) so that the value of a loss corporation that is a member of a controlled group is not taken into account more than once in computing a section 382 limitation.

Comments concerning the collection of information should be sent to the Office of Management and Budget, Attn: Desk Officer for the Department of Treasury, Office of Information and Regulatory Affairs, Washington, DC, 20503, with copies to the Internal Revenue Service, Attn: IRS Reports Clearance Officer, T:FP. Washington, DC, 20224. Comments on the collection of information should be received by August 26, 1996.

An agency may not conduct or sponsor, and a person is not required to respond to, a collection of information unless the collection of information displays a valid control number.

Proposed § 1.382–8(h) provides that the loss corporation must file a statement signed by it and any other member of the controlled group that elects to restore value to it indicating relevant information regarding the election. The likely respondents and/or recordkeepers are corporations that are members of certain controlled groups. Responses to this collection of information are required to obtain a benefit (relating to the restoration of value for section 382 purposes).

Books or records relating to this collection of information must be retained as long as their contents may become material in the administration of any Internal Revenue law. Generally, tax returns and tax return information are confidential, as required by 26 U.S.C. 6103.

Estimated total annual reporting burden: 875 hours. The estimated annual burden per respondent varies from ten to thirty minutes, depending on individual circumstances, with an estimated average of fifteen minutes. Estimated number of respondents: 21,000. Estimated frequency of responses: once every six years.

Background

Temporary regulations in the Rules and Regulations section of this issue of the Federal Register amend the Income Tax Regulations (26 CFR Part 1) under section 382 of the Internal Revenue Code of 1986. Among other changes, those regulations add temporary regulations §§ 1.382–5T and 1.382–8T, and amend § 1.382–2T(f). The final regulations that are proposed to be based on these proposed regulations would be added to part 1 of title 26 of the Code of Federal Regulations. Those final regulations would provide rules relating to limitations on net operating loss carryforwards and certain built-in losses following an ownership change under section 382.

For the text of these new temporary regulations, see TD 8679. The preamble to the temporary regulations explains the regulations.

Special Analyses

It has been determined that this notice of proposed rulemaking is not a significant regulatory action as defined in EO 12866. Therefore, a regulatory assessment is not required. It also has been determined that section 553(b) of the Administrative Procedure Act (5 U.S.C. chapter 5) and the Regulatory Flexibility Act (5 U.S.C. chapter 6) do not apply to these regulations, and, therefore, a Regulatory Flexibility Analysis is not required. Pursuant to section 7805(f) of the Internal Revenue Code, this notice of proposed rulemaking will be submitted to the Chief Counsel for Advocacy of the Small Business Administration for comment on its impact on small business.

Comments and Public Hearing

Before these proposed regulations are adopted as final regulations, consideration will be given to any written comments (a signed original and eight (8) copies) that are submitted timely to the IRS. All comments will be available for public inspection and copying.

A public hearing has been scheduled for Thursday, October 17, 1996, at 10 a.m. in the NYU Classroom, Room 2615, Internal Revenue Building, 1111 Constitution Avenue NW., Washington, DC. Because of access restrictions, visitors will not be admitted beyond the building lobby more than 15 minutes before the hearing starts.

The rules of 26 CFR 601.601(a)(3) apply to the hearing.

Persons that wish to present oral comments at the hearing must submit written comments by September 25, 1996 and submit an outline of the topics to be discussed and the time to be devoted to each topic (signed original and eight (8) copies) by Thursday, September 26, 1996.

A period of 10 minutes will be allotted to each person for making comments.

An agenda showing the scheduling of the speakers will be prepared after the deadline for receiving outlines has passed. Copies of the agenda will be available free of charge at the hearing.

Drafting Information: The principal author of the temporary regulations is David B. Friedel of the Office of Assistant Chief Counsel (Corporate), IRS. Other personnel from the IRS and Treasury participated in their development.

Withdrawal of Notice of Proposed Rulemaking

Accordingly, under the authority of 26 U.S.C. 7805, the notice of proposed rulemaking that was published on January 29, 1991 (56 FR 4183) is withdrawn.

List of Subjects in 26 CFR Part 1

Income taxes, Reporting and recordkeeping requirements.

Proposed Amendments to the Regulations

Accordingly, 26 CFR part 1 is proposed to be amended as follows:

PART 1—INCOME TAXES

Paragraph 1. The authority citation for part 1 is amended by revising the entry for § 1.382–2T and adding citations for §§ 1.382–5 and 1.382–8 in numerical order to read as follows:

Authority: 26 U.S.C. 7805 * * *

Section 1.382–2T also issued under 26 U.S.C. 382(g)(4)(C), (i), (k)(1) and (6), (l)(3), (m), and 26 U.S.C. 383.* * *

Section 1.382–5 also issued under 26 U.S.C. 382(m).* * *

Section 1.382–8 also issued under 26 U.S.C. 382(m).* * *

Par. 2. Section 1.382–1 is amended by revising the entry for § 1.382–2(a)(1)(iv), and adding §§ 1.382–5 and 1.382–8 to read as follows:

§ 1.382–1 Table of contents.

* * * * *

§ 1.382–2 General rules for ownership change.

(a) * * *

(1) * * *

(iv) End of separate accounting for losses and credits of distributor or transferor loss corporation.

* * * * *

§ 1.382–5 Section 382 limitation.

(a) Scope.

(b) Computation of value.

(c) Short taxable year.

(d) Successive ownership changes and absorption of a section 382 limitation.

(1) In general.

(2) Recognized built-in gains and losses.

(3) Effective date.

(e) Controlled groups.

(f) Effective date.

* * * * *

§ 1.382–8 Controlled groups.

(a) Introduction.

(b) Controlled group loss and controlled group with respect to a controlled group loss.

(c) Computation of value.

(1) Reduction in value.

(2) Restoration of value.

(3) Reduction in value by the amount restored.

(4) Appropriate adjustments.

(5) Certain reductions in the value of members of a controlled group.

(d) No double reduction.

(e) Definitions and nomenclature.

(1) Definitions in § 1.382–2T.

(2) Controlled group.

(3) Component member.

(4) Predecessors and successors.

(f) Coordination between consolidated groups and controlled groups.

(g) Examples.

(h) Time and manner of filing election to restore.

(1) Statement required.

(2) Revocation of election.

(3) Filing by component member.

(i) [Reserved]

(j) Effective date.

(1) In general.

(2) Transition rule.

(3) Corporations that are not members on January 29, 1991.

(4) Amended returns.

Par. 3. Section 1.382–2 is amended as follows:

§ 1.382–2 General rules for ownership change.

[The text of the proposed amendments to paragraphs (e)(2)(iv), (f)(1)(i), (ii) and (iii), (f)(4), (f)(5), and (f)(18)(i) is the same as the text of the amendments to paragraphs (e)(2)(iv), (f)(1)(i), (ii) and (iii), (f)(4), (f)(5), and (f)(18)(i) of § 1.382–2T, published elsewhere in this issue of the Federal Register.]

Par. 4. Sections 1.382–5 and 1.382–8 are added to read as follows:

[The text of these proposed sections is the same as the text of §§ 1.382–5T and 1.382–8T published elsewhere in this issue of the Federal Register.]

Margaret Milner Richardson,

Commissioner of Internal Revenue.

[FR Doc. 96–15828 Filed 6–26–96; 8:45 am]

BILLING CODE 4830–01–U

---

26 CFR Part 1

[CO–24–96]

RIN 1545–AU31

Consolidated Returns—Limitations on the Use of Certain Losses and Deductions

AGENCY: Internal Revenue Service (IRS), Treasury.

ACTION: Withdrawal of prior proposed rule, notice of proposed rulemaking by cross-reference to temporary regulations, and notice of public hearing.

SUMMARY: On January 29, 1991, proposed rules under section 1502 were filed with the Office of the Federal Register (CO–78–90; see 56 FR 4228; 1991–1 C.B. 757). A public hearing was held on April 8, 1991. The IRS and Treasury published Notice 91–27 (1991–2 C.B. 629) to advise of intended modifications to the proposed regulations. The January, 1991, proposed rules are withdrawn, and these proposed rules are issued in their place.

In the Rules and Regulations section of this issue of the Federal Register, the IRS is issuing temporary regulations relating to the carryover and carryback of losses to consolidated and separate return years. The text of those temporary regulations also serves as the text of these proposed regulations. This document also provides a notice of public hearing on these proposed regulations.

DATES: Written comments must be received by September 25, 1996. Outlines of topics to be discussed at the public hearing scheduled for Thursday, October 17, 1996, at 10 a.m. must be received by Thursday, September 26, 1996.

ADDRESSES: Send submissions to: CC:DOM:CORP:R (CO–24–96), room 5228, Internal Revenue Service, POB 7604, Ben Franklin Station, Washington, DC 20044. In the alternative, submissions may be hand delivered between the hours of 8 a.m. and 5 p.m. to: CC:DOM:CORP:R (CO–24–96), Courier's Desk, Internal Revenue Service, 1111 Constitution Avenue NW., Washington, DC. The public hearing will be held in the NYU Classroom, Room 2615, Internal Revenue Building, 1111 Constitution Avenue NW., Washington, DC.

FOR FURTHER INFORMATION CONTACT: Concerning the regulations, David B. Friedel, (202) 622–7550; concerning submissions and the hearing, Evangelista Lee, (202) 622–7190 (not toll-free numbers).

SUPPLEMENTARY INFORMATION:

Paperwork Reduction Act

The collection of information contained in this notice of proposed rulemaking has been reviewed and approved by the Office of Management and Budget in accordance with the Paperwork Reduction Act (44 U.S.C. 3507) under the control number 1545–1237. Section 1.1502–21(b)(3) requires a response from certain consolidated groups. The IRS requires the information to assure that an election to relinquish a carryback period is properly documented.

Comments concerning the collection of information should be sent to the Office of Management and Budget, Attn: Desk Officer for the Department of Treasury, Office of Information and Regulatory Affairs, Washington, DC, 20503, with copies to the Internal Revenue Service, Attn: IRS Reports Clearance Officer, T:FP. Washington, DC, 20224. Comments on the collection of information should be received by August 26, 1996.

An agency may not conduct or sponsor, and a person is not required to respond to, a collection of information unless the collection of information displays a valid control number.

The collection of information is in Proposed § 1.1502–21(b)(3). That section permits an election to relinquish a carryback period with respect to a consolidated net operating loss. The common parent of the group files the statement evidencing the election with the income tax return of the group. This information is required by the IRS to assure that an election to relinquish a carryback period is properly documented. The likely respondents

and/or recordkeepers are certain consolidated groups of corporations. Responses to this collection of information are required to obtain a benefit (relating to the carryover of losses which would otherwise be carried back).

Books or records relating to this collection of information must be retained as long as their contents may become material in the administration of any Internal Revenue law. Generally, tax returns and tax return information are confidential, as required by 26 U.S.C. 6103.

Estimated total annual reporting burden: 1,000 hours. The estimated annual burden per respondent varies from five to thirty minutes, depending on individual circumstances, with an estimated average of ten minutes. Estimated number of respondents: 6,000. Estimated annual frequency of responses: 1.

Background

Temporary regulations in the Rules and Regulations section of this issue of the Federal Register amend the Income Tax Regulations (26 CFR par. 1) relating to deductions and losses of members. The temporary amendments concern the method for computing the limitations with respect to separate return limitation year (SRLY) losses. They also concern the rules relating to carryover and carryback of losses to consolidated and separate return years and to the built-in deductions rules. The final regulations that are proposed to be based on these proposed regulations would be added to part 1 of title 26 of the Code of Federal Regulations. Those final regulations would provide rules for computing the limitations with respect to separate return limitation year (SRLY) losses. They also concern the rules relating to carryover and carryback of losses to consolidated and separate return years and to the built-in deductions rules.

For the text of these new temporary regulations, see TD 8677. The preamble to the temporary regulations explains the regulations.

Proposed Effective Date

For dates of application and special transition rules, see the discussion of Effective Dates under **SUPPLEMENTARY INFORMATION** relating to the temporary regulations, published elsewhere in this issue of the Federal Register.

Special Analyses

It has been determined that this notice of proposed rulemaking is not a significant regulatory action as defined in EO 12866. Therefore, a regulatory assessment is not required. It is hereby certified that these regulations do not have a significant economic impact on a substantial number of small entities. This certification is based on the fact that these regulations will primarily affect affiliated groups of corporations that have elected to file consolidated returns, which tend to be larger businesses. Therefore, a Regulatory Flexibility Analysis under the Regulatory Flexibility Act (5 U.S.C. chapter 6) is not required. Pursuant to section 7805(f) of the Internal Revenue Code, this notice of proposed rulemaking will be submitted to the Chief Counsel for Advocacy of the Small Business Administration for comment on its impact on small business.

Comments and Public Hearing

Before these proposed regulations are adopted as final regulations, consideration will be given to any written comments (a signed original and eight (8) copies) that are submitted timely to the IRS. All comments will be available for public inspection and copying.

A public hearing has been scheduled for Monday, September 16, 1996, at 10 a.m. in the NYU Classroom, Room 2615, Internal Revenue Building, 1111 Constitution Avenue NW., Washington, DC. Because of access restrictions, visitors will not be admitted beyond the building lobby more than 15 minutes before the hearing starts.

The rules of 26 CFR 601.601(a)(3) apply to the hearing.

Persons that wish to present oral comments at the hearing must submit written comments by September 25, 1996 and submit an outline of the topics to be discussed and the time to be devoted to each topic (signed original and eight (8) copies) by Thursday, September 26, 1996.

A period of 10 minutes will be allotted to each person for making comments.

An agenda showing the scheduling of the speakers will be prepared after the deadline for receiving outlines has passed. Copies of the agenda will be available free of charge at the hearing.

Drafting Information

The principal author of these regulations is David B. Friedel, Office of Assistant Chief Counsel (Corporate), IRS. However, other personnel from the IRS and Treasury Department participated in their development.

Withdrawal of Notice of Proposed Rulemaking

Accordingly, under the authority of 26 U.S.C. 7805, the notice of proposed rulemaking that was published on January 29, 1991 (56 FR 4228) is withdrawn.

List of Subjects in 26 CFR Part 1

Income taxes, Reporting and recordkeeping requirements.

Proposed Amendments to the Regulations

Accordingly, 26 CFR part 1 is proposed to be amended as follows:

PART 1—INCOME TAXES

Paragraph 1. The authority citation for Part 1 is amended in part by adding citations in numerical order to read as follows:

Authority: 26 U.S.C. 7805

* * * * *

Section 1.1502–15 also issued under 26 U.S.C. 1502.

* * * * *

Section 1.1502–21 also issued under 26 U.S.C. 1502.

Section 1.1502–22 also issued under 26 U.S.C. 1502.

Section 1.1502–23 also issued under 26 U.S.C. 1502.

Section 1.1502–79 also issued under 26 U.S.C. 1502.

Section 1.1502–15A also issued under 26 U.S.C. 1502.

Section 1.1502–21A also issued under 26 U.S.C. 1502.

Section 1.1502–22A also issued under 26 U.S.C. 1502.

Section 1.1502–23A also issued under 26 U.S.C. 1502.

Section 1.1502–41A also issued under 26 U.S.C. 1502.

Section 1.1502–79A also issued under 26 U.S.C. 1502.

* * * * *

Par. 2. Section 1.1502–15 is added to read as follows:

§ 1.1502–15 SRLY limitation on built-in losses.

[The text of this proposed section is the same as the text of § 1.1502–15T published elsewhere in this issue of the Federal Register.]

Par. 3. Section 1.1502–21 is added to read as follows:

§ 1.1502–21 Net operating losses.

[The text of this proposed section is the same as the text of § 1.1502–21T published elsewhere in this issue of the Federal Register.]

Par. 4. Section 1.1502–22 is added to read as follows:

§ 1.1502–22 Consolidated capital gain and loss.

[The text of this proposed section is the same as the text of § 1.1502–22T published elsewhere in this issue of the Federal Register.]

Par. 5. Section 1.1502–23 is added to read as follows:

§ 1.1502–23 Consolidated net section 1231 gain or loss.

[The text of this proposed section is the same as the text of § 1.1502–23T published elsewhere in this issue of the Federal Register.]

Margaret Milner Richardson,

Commissioner of Internal Revenue.

[FR Doc. 96–15826 Filed 6–26–96; 8:45 am]

BILLING CODE 4830–01–U

---

26 CFR Part 1

[CO–25–96]

RIN 1545–AU32

Regulations Under Section 1502 of the Internal Revenue Code of 1986; Limitations on Net Operating Loss Carryforwards and Certain Built-in Losses and Credits Following an Ownership Change of a Consolidated Group

AGENCY: Internal Revenue Service (IRS), Treasury.

ACTION: Withdrawal of prior proposed rule, notice of proposed rulemaking by cross-reference to temporary regulations, and notice of public hearing.

SUMMARY: On February 4, 1991, proposed rules under section 1502 were published in the Federal Register (CO–132–87; see 56 FR 4194; 1991–1 C.B. 728). A public hearing was held on April 8, 1991. The IRS and Treasury published Notice 91–27 (1991–2 C.B. 629) to advise of intended modifications to the proposed regulations. The February, 1991, proposed rules are withdrawn and these proposed regulations are issued in their place.

In the Rules and Regulations section of this issue of the Federal Register, the IRS is issuing temporary regulations regarding the operation of sections 382 and 383 of the Internal Revenue Code of 1986 (relating to limitations on net operating loss carryforwards and certain built-in losses and credits following an ownership change) with respect to consolidated groups. The text of those temporary regulations also serves as the text of these proposed regulations. This document also provides a notice of public hearing on these proposed regulations.

DATES: Written comments must be received by September 25, 1996. Outlines of topics to be discussed at the public hearing scheduled for Thursday, October 17, 1996, at 10 a.m. must be received by Thursday, September 26, 1996.

ADDRESSES: Send submissions to: CC:DOM:CORP:R (CO–25–96), room 5228, Internal Revenue Service, POB 7604, Ben Franklin Station, Washington, DC 20044. In the alternative, submissions may be hand delivered between the hours of 8 a.m. and 5 p.m. to: CC:DOM:CORP:R (CO–25–96), Courier's Desk, Internal Revenue Service, 1111 Constitution Avenue NW., Washington, DC. The public hearing will be held in the NYU Classroom, Room 2615, Internal Revenue Building, 1111 Constitution Avenue NW., Washington, DC.

FOR FURTHER INFORMATION CONTACT: Concerning the regulations, David B. Friedel, (202) 622–7550; concerning submissions and the hearing, Evangelista Lee, (202) 622–7190 (not toll-free numbers).

SUPPLEMENTARY INFORMATION:

Paperwork Reduction Act

The collection of information contained in this notice of proposed rulemaking has been reviewed and approved by the Office of Management and Budget in accordance with the Paperwork Reduction Act (44 U.S.C. 3507) under the control number 1545–1218. The collection requires a response from certain consolidated groups. The IRS requires the information described in Proposed § 1.1502–95(e) to assure that a section 382 limitation is properly determined in cases of corporations that cease to be members of a group.

Comments concerning the collection of information should be sent to the Office of Management and Budget, Attn: Desk Officer for the Department of the Treasury, Office of Information and Regulatory Affairs, Washington, DC, 20503, with copies to the Internal Revenue Service, Attn: IRS Reports Clearance Officer, T:FP. Washington, DC, 20224. Comments on the collection of information should be received by August 26, 1996.

An agency may not conduct or sponsor, and a person is not required to respond to, a collection of information unless the collection of information displays a valid control number.

The collection of information is in Proposed § 1.1502–95(e). That section permits an election with respect to the apportionment of a group section 382 limitation to a departing member. A statement evidencing the apportionment must be filed by the group and the departing member indicating relevant information regarding the apportionment. The likely respondents and/or recordkeepers are corporations that are members of certain consolidated groups. Responses to this collection of information are required to obtain a benefit (relating to the section 382 limitation applicable to the departing member(s)).

Books or records relating to this collection of information must be retained as long as their contents may become material in the administration of any Internal Revenue law. Generally, tax returns and tax return information are confidential, as required by 26 U.S.C. 6103.

Estimated total annual reporting burden: 380 hours. The estimated annual burden per respondent varies from ten to thirty minutes, depending on individual circumstances, with an estimated average of fifteen minutes. Estimated number of respondents: 9,125. Estimated frequency of responses: once every six years.

Background

Temporary regulations in the Rules and Regulations section of this issue of the Federal Register amend the Income Tax Regulations (26 CFR Part 1) under section 1502, relating to limitations on net operating loss carryforwards and certain built-in losses and credits following an ownership change with respect to consolidated groups. The final regulations that are proposed to be based on these proposed regulations would be added to part 1 of title 26 of the Code of Federal Regulations. Those final regulations would provide rules relating to limitations on net operating loss carryforwards and certain built-in losses following an ownership change.

For the text of these new temporary regulations, see TD 8678. The preamble to the temporary regulations explains the regulations.

Special Analyses

It has been determined that this notice of proposed rulemaking is not a significant regulatory action as defined in EO 12866. Therefore, a regulatory assessment is not required. It is hereby certified that these regulations do not have a significant economic impact on a substantial number of small entities. This certification is based on the fact that these regulations will primarily affect affiliated groups of corporations that have elected to file consolidated returns, which tend to be larger businesses. Therefore, a Regulatory Flexibility Analysis under the Regulatory Flexibility Act (5 U.S.C. chapter 6) is not required. Pursuant to section 7805(f) of the Internal Revenue Code, this notice of proposed rulemaking will be submitted to the Chief Counsel for Advocacy of the Small

Business Administration for comment on its impact on small business.

Comments and Public Hearing

Before these proposed regulations are adopted as final regulations, consideration will be given to any written comments (a signed original and eight (8) copies) that are submitted timely to the IRS. All comments will be available for public inspection and copying.

A public hearing has been scheduled for Thursday, October 17, 1996, at 10 a.m. in the NYU Classroom, Room 2615, Internal Revenue Building, 1111 Constitution Avenue NW., Washington, DC. Because of access restrictions, visitors will not be admitted beyond the building lobby more than 15 minutes before the hearing starts.

The rules of 26 CFR 601.601(a)(3) apply to the hearing.

Persons that wish to present oral comments at the hearing must submit written comments by September 25, 1996 and submit an outline of the topics to be discussed and the time to be devoted to each topic (signed original and eight (8) copies) by Thursday, September 26, 1996.

A period of 10 minutes will be allotted to each person for making comments.

An agenda showing the scheduling of the speakers will be prepared after the deadline for receiving outlines has passed. Copies of the agenda will be available free of charge at the hearing.

Drafting information: The principal author of the temporary regulations is David B. Friedel of the Office of Assistant Chief Counsel (Corporate), IRS. Other personnel from the IRS and Treasury participated in their development.

Withdrawal of Notice of Proposed Rulemaking

Accordingly, under the authority of 26 U.S.C. 7805, the notice of proposed rulemaking that was published on February 4, 1991 (56 FR 4194) is withdrawn.

List of Subjects in 26 CFR Part 1

Income taxes, Reporting and recordkeeping requirements.

Proposed Amendments to the Regulations

Accordingly, 26 CFR parts 1 and 602 are proposed to be amended as follows:

PART 1—INCOME TAXES

Paragraph 1. The authority citation for part 1 is amended by adding entries in numerical order to read as follows:

Authority: 26 U.S.C. 7805 * * *

Section 1.1502–91 also issued under 26 U.S.C. 382(m) and 26 U.S.C. 1502.

Section 1.1502–92 also issued under 26 U.S.C. 382(m) and 26 U.S.C. 1502.

Section 1.1502–93 also issued under 26 U.S.C. 382(m) and 26 U.S.C. 1502.

Section 1.1502–94 also issued under 26 U.S.C. 382(m) and 26 U.S.C. 1502.

Section 1.1502–95 also issued under 26 U.S.C. 382(m) and 26 U.S.C. 1502.

Section 1.1502–96 also issued under 26 U.S.C. 382(m) and 26 U.S.C. 1502.

Section 1.1502–98 also issued under 26 U.S.C. 382(m) and 26 U.S.C. 1502.

Section 1.1502–99 also issued under 26 U.S.C. 382(m) and 26 U.S.C. 1502. * * *

Par. 2. Sections 1.1502–90 through 1.1502–99 are added to read as follows:

§ 1.1502–90 Table of contents.

§ 1.1502–91 Application of section 382 with respect to a consolidated group.

§ 1.1502–92 Ownership change of a loan group of a loss subgroup.

§ 1.1502–93 Consolidated section 382 limitation (or subgroup section 382 limitation).

§ 1.1502–94 Coordination with section 382 and the regulations thereunder when a corporation becomes a member of a consolidated group.

§ 1.1502–95 Rules on ceasing to be a member of a consolidated group (or loss subgroup).

§ 1.1502–96 Miscellaneous rules.

§ 1.1502–97 Special rules under section 382 for members under the jurisdiction of a court in a title 11 or similar case. [Reserved]

§ 1.1502–98 Coordination with section 383.

§ 1.1502–99 Effective dates.

[The text of the above proposed sections is the same as the text of §§ 1.1502–90T through 1.1502–99T published elsewhere in this issue of the Federal Register.]

Margaret Milner Richardson,

Commissioner of Internal Revenue.

[FR Doc. 96–15827 Filed 6–26–96; 8:45 am]

BILLING CODE 4830–01–U

---

26 CFR Part 1

[FI–48–95]

RIN 1545–AU09

Amortizable Bond Premium

AGENCY: Internal Revenue Service (IRS), Treasury.

ACTION: Notice of proposed rulemaking and notice of public hearing.

SUMMARY: This document contains proposed regulations relating to the federal income tax treatment of bond premium and bond issuance premium. The proposed regulations reflect changes to the law made by the Tax Reform Act of 1986 and the Technical and Miscellaneous Revenue Act of 1988. The proposed regulations in this document would provide needed guidance to holders and issuers of debt instruments. This document also provides a notice of a public hearing on the proposed regulations.

DATES: Written comments must be received by September 25, 1996. Requests to appear and outlines of topics to be discussed at the public hearing scheduled for October 23, 1996, at 10 a.m. must be received by October 2, 1996.

ADDRESSES: Send submissions to: CC:DOM:CORP:R (FI–48–95), room 5226, Internal Revenue Service, POB 7604, Ben Franklin Station, Washington, DC 20044. In the alternative, submissions may be hand delivered between the hours of 8 a.m. and 5 p.m. to: CC:DOM:CORP:R (FI–48–95), Courier's Desk, Internal Revenue Service, 1111 Constitution Avenue NW, Washington, DC. A public hearing will be held in the Commissioner's Conference Room, Internal Revenue Building, 1111 Constitution Avenue NW, Washington, DC.

FOR FURTHER INFORMATION CONTACT: Concerning the regulations, William P. Cejudo, (202) 622–4016, or Jeffrey W. Maddrey, (202) 622–3940; concerning submissions and the hearing, Christina Vasquez, (202) 622–7190 (not toll-free numbers).

SUPPLEMENTARY INFORMATION:

Paperwork Reduction Act

The collections of information contained in this notice of proposed rulemaking have been submitted to the Office of Management and Budget for review in accordance with the Paperwork Reduction Act of 1995 (44 U.S.C. 3507).

Comments on the collections of information should be sent to the Office of Management and Budget, Attn: Desk Officer for the Department of Treasury, Office of Information and Regulatory Affairs, Washington, DC 20503, with copies to the Internal Revenue Service, Attn: IRS Reports Clearance Officer, T:FP, Washington, DC 20224. Comments on the collections of information should be received by August 26, 1996.

An agency may not conduct or sponsor, and a person is not required to respond to, a collection of information unless the collection of information displays a valid control number.

The collections of information are in proposed §§ 1.163–13(h)(3), 1.171–4(a)(1), and 1.171–5(c)(2)(iii). This information is required by the IRS to monitor compliance with the federal tax rules for amortizing bond premium and bond issuance premium. The likely respondents are taxpayers who either

acquire a bond at a premium or issue a bond at a premium. Responses to this collection of information are required to determine whether a holder of a bond has elected to amortize bond premium and to determine whether an issuer or a holder has changed its method of accounting for premium.

Books or records relating to a collection of information must be retained as long as their contents may become material in the administration of any internal revenue law. Generally, tax returns and tax return information are confidential, as required by 26 U.S.C. 6103.

Estimated total annual reporting burden: 50,000 hours. The estimated annual burden per respondent varies from 0.25 hours to 0.75 hours, depending on individual circumstances, with an estimated average of 0.5 hours.

Estimated number of respondents: 100,000.

Estimated annual frequency of responses: One time per respondent.

Background

Sections 1.171–1 through 1.171–4 of the Income Tax Regulations were promulgated in 1957 and last amended in 1968. In the Tax Reform Act of 1986, section 171(b) was amended to require that bond premium be amortized by reference to a constant yield. In the Technical and Miscellaneous Revenue Act of 1988, section 171(e) was amended to require that bond premium be amortized as an offset to interest income. The proposed regulations would substantially revise the existing regulations to reflect these amendments. In addition, the proposed regulations would revise existing guidance addressing the issuer's treatment of bond issuance premium.

Explanation of Provisions

In general, bond premium arises when a holder acquires a bond for more than the principal amount of the bond. Similarly, bond issuance premium arises when an issuer issues a bond for more than the principal amount of the bond. A holder will purchase, and an issuer will issue, a bond for more than its principal amount when the stated interest rate on the bond is higher than the current market yield for the bond.

The holder's treatment of bond premium is addressed in proposed regulations under section 171. The issuer's treatment of bond issuance premium is addressed in proposed regulations under section 163. In each case, the amortization of premium is based on constant yield principles. For this reason, the proposed regulations use concepts and definitions from the original issue discount (OID) regulations (§§ 1.1271–0 through 1.1275–6).

Determination of Bond Premium

Under the proposed regulations, bond premium is defined as the excess of a holder's basis in a bond over the sum of the remaining amounts payable on the bond other than payments of qualified stated interest. The holder generally determines the amount of bond premium as of the date the holder acquires the bond.

The proposed regulations provide special rules that limit a holder's basis solely for purposes of determining bond premium. For example, if a bond is convertible into stock of the issuer at the holder's option, for purposes of determining bond premium, the holder must reduce its basis in the bond by the value of the conversion option. This reduction prevents the holder from inappropriately amortizing the cost of the embedded conversion option.

Amortization of Bond Premium

Under section 171, the holder of a taxable bond acquired at a premium may elect to amortize bond premium. The holder of a tax-exempt bond acquired at a premium must amortize the premium. As premium is amortized, the holder's basis in the bond is reduced by a corresponding amount under section 1016(a)(5).

Under the proposed regulations, a holder amortizes bond premium by offsetting qualified stated interest income with bond premium. An offset is calculated for each accrual period using constant yield principles. However, the offset for an accrual period is only taken into account when the holder takes qualified stated interest into account under the holder's regular method of accounting. Thus, a holder using the cash receipts and disbursements method of accounting does not take bond premium into account until a qualified stated interest payment is received.

For certain bonds (e.g., bonds that pay a variable rate of interest or that provide for an interest holiday), the amount of bond premium allocable to an accrual period could exceed the amount of qualified stated interest allocable to that period. The proposed regulations address this situation by providing that the excess bond premium is not allowed as a deduction but is carried forward to future accrual periods.

Variable Rate Debt Instruments

Because a variable rate debt instrument (VRDI) provides for variable interest payments, the yield and payment schedule of a VRDI cannot be determined without making assumptions about the amount of the variable payments. Under the OID regulations, OID on a VRDI is determined and allocated among accrual periods by reference to an equivalent fixed rate debt instrument constructed as of the issue date of the VRDI. The proposed regulations provide that bond premium on a VRDI is determined and allocated in a similar manner. Under the proposed regulations, bond premium on a VRDI is determined and allocated by reference to an equivalent fixed rate debt instrument. However, the equivalent fixed rate debt instrument is constructed as of the date the holder acquires the VRDI rather than the issue date.

Bonds Subject to Certain Contingencies

If a bond provides for one or more alternative payment schedules, the yield of the bond cannot be determined without making assumptions about the actual payment schedule. The OID regulations provide three rules for making these assumptions. First, if one payment schedule is significantly more likely than not to occur, the yield of the debt instrument is determined by reference to this payment schedule. Second, if the debt instrument is subject to a mandatory sinking fund provision, the yield is determined without regard to the mandatory sinking fund provision. Third, notwithstanding the first two rules, if the debt instrument provides for an unconditional option or options to alter the payment schedule, the yield is determined by assuming that the issuer will exercise its options in the manner that minimizes the yield of the debt instrument and that the holder will exercise its options in the manner that maximizes the yield of the debt instrument.

The proposed regulations generally use similar assumptions to determine the holder's yield on a bond that provides for alternative payment schedules. However, in the case of an issuer's option on a taxable bond, the proposed regulations reverse the assumption by assuming that the issuer will exercise the option only if doing so would increase the yield on the bond. See section 171(b)(1)(B)(ii). As a result of this rule, a holder generally must amortize bond premium on a taxable bond by reference to the stated maturity date, even if it appears likely the bond will be called. In this case, if the bond is actually called, the proposed regulations provide that the holder may deduct the unamortized premium. If the bond is partially called and the partial call is not a pro-rata prepayment, the proposed regulations do not allow the

holder to deduct a portion of the unamortized premium. Instead, the holder must recompute the yield of the bond on the date of the partial call and amortize the remaining premium by reference to the recomputed yield.

Treasury and IRS request comments on the application of the alternative payment schedule rules. Specifically, comments are requested on whether the ''significantly more likely than not to occur'' standard is appropriate for taxable bonds, whether ignoring mandatory sinking fund provisions is appropriate for tax-exempt bonds, and whether the distinction between pro-rata and non-pro-rata calls is appropriate.

Bond Issuance Premium

Under existing § 1.61–12(c), a corporate issuer treats premium received upon issuance of a bond as a separate item of income. Over the term of the bond, the premium is taken into income, and the full amount of the stated interest is deducted. The proposed regulations would revise the treatment of bond issuance premium. Under the proposed regulations, bond issuance premium is amortized as an offset to the issuer's otherwise allowable interest deduction, not as a separate item of income. The amount of bond issuance premium amortized in any period is based on a constant yield. In addition, the proposed regulations would apply to all issuers, not just corporate issuers.

De Minimis Rules and Aggregate Rules

The proposed regulations do not provide rules for de minimis amounts of premium or for aggregate methods of accounting for premium. Treasury and IRS request comments on whether de minimis rules or aggregate rules are necessary or appropriate.

Bonds Not Subject to the Proposed Regulations

The proposed regulations generally apply to bonds acquired or issued at a premium. Certain bonds, however, are excluded from the application of the proposed regulations. For example, the proposed regulations exclude debt instruments subject to section 1272(a)(6) (relating to certain prepayable debt instruments). No inference is intended regarding the treatment of these debt instruments.

Proposed Effective Dates

The proposed regulations relating to bond premium provide that the final regulations generally will apply to bonds acquired on or after the date 60 days after the date final regulations are published in the Federal Register. However, if a holder makes the election to amortize bond premium for the taxable year containing the date 60 days after the date final regulations are published, the regulations apply to bonds held on or after the first day of that taxable year.

The proposed regulations relating to bond issuance premium provide that the final regulations will apply to debt instruments issued on or after the date 60 days after the date final regulations are published in the Federal Register.

The proposed regulations also would provide automatic consent for a taxpayer to change its method of accounting for premium in certain circumstances. Because the change is made on a cut-off basis, no items of income or deduction are omitted or duplicated. Therefore, no adjustment under section 481 is allowed.

Special Analyses

It has been determined that this notice of proposed rulemaking is not a significant regulatory action as defined in EO 12866. Therefore, a regulatory assessment is not required. It also has been determined that section 553(b) of the Administrative Procedure Act (5 U.S.C. chapter 5) and the Regulatory Flexibility Act (5 U.S.C. chapter 6) do not apply to these regulations, and, therefore, a Regulatory Flexibility Analysis is not required. Pursuant to section 7805(f) of the Internal Revenue Code, this notice of proposed rulemaking will be submitted to the Chief Counsel for Advocacy of the Small Business Administration for comment on its impact on small business.

Comments and Public Hearing

Before these proposed regulations are adopted as final regulations, consideration will be given to any written comments (a signed original and eight (8) copies) that are submitted timely to the IRS. All comments will be available for public inspection and copying.

A public hearing has been scheduled for October 23, 1996, at 10 a.m. in the Commissioner's Conference Room, Internal Revenue Building, 1111 Constitution Avenue NW, Washington, DC. Because of access restrictions, visitors will not be admitted beyond the building lobby more than 15 minutes before the hearing starts.

The rules of 26 CFR 601.601(a)(3) apply to the hearing.

Persons that wish to present oral comments at the hearing must submit written comments by September 25, 1996. and submit an outline of the topics to be discussed and the time to be devoted to each topic (signed original and eight (8) copies) by October 2, 1996.

A period of 10 minutes will be allotted to each person for making comments.

An agenda showing the scheduling of the speakers will be prepared after the deadline for receiving outlines has passed. Copies of the agenda will be available free of charge at the hearing.

Drafting Information

The principal authors of these regulations are William P. Cejudo and Jeffrey W. Maddrey of the Office of Assistant Chief Counsel (Financial Institutions and Products). However, other personnel from the IRS and Treasury Department participated in their development.

List of Subjects in 26 CFR Part 1

Income taxes, Reporting and recordkeeping requirements.

Proposed Amendments to the Regulations

Accordingly, 26 CFR part 1 is proposed to be amended as follows:

PART 1—INCOME TAXES

Paragraph 1. The authority citation for part 1 is amended by adding entries in numerical order to read as follows:

Authority: 26 U.S.C. 7805 * * *

Section 1.171–2 also issued under 26 U.S.C. 171(e).

Section 1.171–3 also issued under 26 U.S.C. 171(e).

Section 1.171–4 also issued under 26 U.S.C. 171(c). * * *

Par. 2. Section 1.61–12 is amended by revising paragraph (c) to read as follows:

§ 1.61–12 Income from discharge of indebtedness.

* * * * *

(c) *Issuance and repurchase of debt instruments*—(1) *Issuance.* An issuer does not realize gain or loss upon the issuance of a debt instrument (as defined in § 1.1275–1(d)).

(2) *Repurchase*—(i) *In general.* An issuer does not realize gain or loss upon the repurchase of a debt instrument. For purposes of this paragraph (c)(2), the term *repurchase* includes the retirement of a debt instrument, the conversion of a debt instrument into stock of the issuer, and the exchange (including an exchange under section 1001) of a newly issued debt instrument for an existing debt instrument.

(ii) *Repurchase at a discount.* An issuer realizes income from the discharge of indebtedness upon the repurchase of a debt instrument for an amount less than its adjusted issue price (as defined in § 1.163–13(d)(5)). The

amount of discharge of indebtedness income is equal to the excess of the adjusted issue price over the repurchase price. To determine the repurchase price of a debt instrument that is repurchased through the issuance of a new debt instrument, see section 108(e)(10). See § 1.108–2 for rules relating to the realization of discharge of indebtedness income upon the acquisition of a debt instrument by a person related to the issuer.

(iii) *Repurchase at a premium*. An issuer may be entitled to a repurchase premium deduction upon the repurchase of a debt instrument for an amount greater than its adjusted issue price (as defined in § 1.163–13(d)(5)). See § 1.163–7(c) for the treatment of repurchase premium.

(3) *Bond issuance premium*. For rules relating to an issuer's interest deduction for a debt instrument issued with bond issuance premium, see § 1.163–13.

(4) *Effective date*. This paragraph (c) applies to debt instruments issued on or after the date that is 60 days after the date final regulations are published in the Federal Register.

* * * * *

Par. 3. Section 1.163–7 is amended by revising the first sentence of paragraph (c) to read as follows:

§ 1.163–7 Deduction for OID on certain debt instruments.

* * * * *

(c) *Deduction upon repurchase*. Except to the extent disallowed by any other section of the Internal Revenue Code (e.g., section 249) or this paragraph (c), if a debt instrument is repurchased by the issuer for a price in excess of its adjusted issue price (as defined in § 1.163–13(d)(5)), the excess (repurchase premium) is deductible as interest for the taxable year in which the repurchase occurs. * * *

* * * * *

Par. 4. Section 1.163–13 is added to read as follows:

§ 1.163–13 Treatment of bond issuance premium.

(a) *General rule*. If a debt instrument is issued with bond issuance premium, this section limits the amount of the issuer's interest deduction otherwise allowable under section 163(a). In general, the issuer determines its interest deduction by offsetting the interest allocable to an accrual period with the bond issuance premium allocable to that period. Bond issuance premium is allocable to an accrual period based on a constant yield. The use of a constant yield to amortize bond issuance premium is intended to conform the treatment of debt instruments having bond issuance premium with those having original issue discount. Unless otherwise provided, the terms used in this section have the same meaning as those terms in section 163(e), sections 1271 through 1275, and the corresponding regulations. Moreover, the provisions of this section apply in a manner consistent with those of section 163(e), sections 1271 through 1275, and the corresponding regulations. In addition, the anti- abuse rule in § 1.1275–2(g) applies for purposes of this section. For rules dealing with the treatment of bond premium by a holder, see §§ 1.171–1 through 1.171–5.

(b) *Exceptions*. This section does not apply to—

(1) A debt instrument to which section 1272(a)(6) applies (relating to certain interests in or mortgages held by a REMIC, and certain other debt instruments with payments subject to acceleration); or

(2) A debt instrument to which § 1.1275–4 applies (relating to certain debt instruments that provide for contingent payments).

(c) *Bond issuance premium*. Bond issuance premium is the excess, if any, of the issue price of a debt instrument over its stated redemption price at maturity. For purposes of this section, the issue price of a convertible bond (as defined in § 1.171–1(e)(1)(iii)(C)) does not include an amount equal to the value of the conversion option.

(d) *Offsetting qualified stated interest with bond issuance premium*—(1) *In general*. An issuer amortizes bond issuance premium by offsetting the qualified stated interest allocable to an accrual period with the bond issuance premium allocable to the accrual period. This offset occurs when the issuer takes the qualified stated interest into account under its regular method of accounting.

(2) *Qualified stated interest allocable to an accrual period*. See § 1.446–2(b) to determine the accrual period to which qualified stated interest is allocable and to determine the accrual of qualified stated interest within an accrual period.

(3) *Bond issuance premium allocable to an accrual period*. The bond issuance premium allocable to an accrual period is determined under this paragraph (d)(3). Within an accrual period, the bond issuance premium allocable to the period accrues ratably.

(i) *Step one: Determine the debt instrument's yield to maturity*. The yield to maturity of a debt instrument is determined under the rules of § 1.1272–1(b)(1)(i).

(ii) *Step two: Determine the accrual periods*. The accrual periods are determined under the rules of § 1.1272–1(b)(1)(ii).

(iii) *Step three: Determine the bond issuance premium allocable to the accrual period*. The bond issuance premium allocable to an accrual period is the excess of the qualified stated interest allocable to the accrual period over the product of the adjusted issue price at the beginning of the accrual period and the yield. In performing this calculation, the yield must be stated appropriately taking into account the length of the particular accrual period. Principles similar to those in § 1.1272–1(b)(4) apply in determining the bond issuance premium allocable to an accrual period.

(4) *Bond issuance premium in excess of qualified stated interest*. If the bond issuance premium allocable to an accrual period exceeds the qualified stated interest allocable to the accrual period for a debt instrument, the excess is carried forward to the next accrual period and offsets qualified stated interest in that accrual period to the extent of the disallowed amount. If the amount carried forward to an accrual period exceeds the qualified stated interest for that period, the excess is carried forward to subsequent accrual periods, beginning with the next accrual period, and is used to offset qualified stated interest in those accrual periods to the extent of the excess. If an excess amount exists on the date the debt instrument is retired, the issuer takes this amount into account as ordinary income.

(5) *Adjusted issue price*. In general, the adjusted issue price of a debt instrument is determined under the rules of § 1.1275–1(b). In addition, the adjusted issue price of the debt instrument is decreased by the amount of bond issuance premium previously allocable under paragraph (d)(3) of this section.

(e) *Special rules*—(1) *Variable rate debt instruments issued with bond issuance premium*. Bond issuance premium on a variable rate debt instrument is determined by reference to the stated redemption price at maturity of the equivalent fixed rate debt instrument constructed as of the issue date. In addition, the issuer allocates bond issuance premium on a variable rate debt instrument among the accrual periods by reference to the equivalent fixed rate debt instrument. The equivalent fixed rate debt instrument is determined using the principles of § 1.1275–5(e).

(2) *Remote and incidental contingencies*. For purposes of determining and amortizing bond issuance premium, if a bond provides

for a contingency that is remote or incidental (within the meaning of § 1.1275–2(h)), the contingency is taken into account under the rules for remote and incidental contingencies in § 1.1275–2(h).

(f) *Example.* The following example illustrates the rules of this section.

Example—(i) *Facts.* On February 1, 1999, X issues for $110,000 a debt instrument maturing on February 1, 2006, with a stated principal amount of $100,000, payable at maturity. The debt instrument provides for unconditional payments of interest of $10,000, payable on February 1 of each year. X uses the calendar year as its taxable year, X uses the cash receipts and disbursements method of accounting, and X decides to use annual accrual periods ending on February 1 of each year. X's calculations assume a 30-day month and 360-day year.

(ii) *Amount of bond issuance premium.* The issue price of the debt instrument is $110,000. Because the interest payments on the debt instrument are qualified stated interest, the stated redemption price at maturity of the debt instrument is $100,000. Therefore, the amount of bond issuance premium is $10,000 ($110,000 − $100,000).

(iii) *Bond issuance premium allocable to the first accrual period.* Based on the payment schedule and the issue price of the debt instrument, the yield of the debt instrument is 8.07 percent, compounded annually. (Although, for purposes of simplicity, the yield as stated is rounded to two decimal places, the computations do not reflect this rounding convention.) The bond issuance premium allocable to the accrual period ending on February 1, 2000, is the excess of the qualified stated interest allocable to the period ($10,000) over the product of the adjusted issue price at the beginning of the period ($110,000) and the yield (8.07 percent, compounded annually). Therefore, the bond issuance premium allocable to the accrual period is $1,118.17 ($10,000 − $8,881.83).

(iv) *Premium used to offset interest.* Although X makes an interest payment of $10,000 on February 1, 2000, X only deducts interest of $8,881.83, the qualified stated interest allocable to the period ($10,000) offset with bond issuance premium allocable to the period ($1,118.17).

(g) *Effective date.* This section applies to debt instruments issued on or after the date that is 60 days after the date final regulations are published in the Federal Register.

(h) *Consent to change method of accounting.* The Commissioner grants consent for an issuer to change its method of accounting for bond issuance premium on debt instruments issued on or after the date that is 60 days after the date final regulations are published in the Federal Register. However, this consent is granted only if—

(1) The change is made to comply with this section;

(2) The change is made for the first taxable year for which the issuer must account for a debt instrument under this section; and

(3) The issuer attaches to its federal income tax return for the taxable year containing the change a statement that it has changed its method of accounting under this section.

Par. 5. Sections 1.171–1 through 1.171–4 are revised to read as follows:

§ 1.171–1 Bond premium.

(a) *Overview*—(1) *In general.* This section and §§ 1.171–2 through 1.171–5 provide rules for the determination and amortization of bond premium by a holder. In general, a holder amortizes bond premium by offsetting the interest allocable to an accrual period with the premium allocable to that period. Bond premium is allocable to an accrual period based on a constant yield. The use of a constant yield to amortize bond premium is intended generally to conform the treatment of bond premium to the treatment of original issue discount under sections 1271 through 1275. Unless otherwise provided, the terms used in this section and §§ 1.171–2 through 1.171–5 have the same meaning as those terms in sections 1271 through 1275 and the corresponding regulations. Moreover, the provisions of this section and §§ 1.171–2 through 1.171–5 apply in a manner consistent with those of sections 1271 through 1275 and the corresponding regulations. In addition, the anti-abuse rule in § 1.1275–2(g) applies for purposes of this section and §§ 1.171–2 through 1.171–5.

(2) *Cross-references.* For rules dealing with the adjustments to a holder's basis to reflect the amortization of bond premium, see § 1.1016–5(b). For rules dealing with the treatment of bond issuance premium by an issuer, see § 1.163–13.

(b) *Scope*—(1) *In general.* Except as provided in paragraph (b)(2) of this section, this section and §§ 1.171–2 through 1.171–5 apply to any bond that, upon its acquisition by the holder, is held with bond premium. For purposes of this section and §§ 1.171–2 through 1.171–5, the term *bond* has the same meaning as the term *debt instrument* in § 1.1275–1(d).

(2) *Exceptions.* This section and §§ 1.171–2 through 1.171–5 do not apply to—

(i) A bond to which section 1272(a)(6) applies (relating to certain interests in or mortgages held by a REMIC, and certain other debt instruments with payments subject to acceleration);

(ii) A bond to which § 1.1275–4 applies (relating to certain debt instruments that provide for contingent payments);

(iii) A bond held by a holder that has made a § 1.1272–3 election with respect to the bond;

(iv) A bond that is stock in trade of the holder, a bond of a kind that would properly be included in the inventory of the holder if on hand at the close of the taxable year, or a bond held primarily for sale to customers in the ordinary course of the holder's trade or business; or

(v) A bond issued before September 28, 1985, unless the bond bears interest and was issued by a corporation or by a government or political subdivision thereof.

(c) *General rule*—(1) *Tax-exempt obligations.* A holder must amortize bond premium on a bond that is a tax-exempt obligation. See § 1.171–2(c) *Example 4.*

(2) *Taxable bonds.* A holder may elect to amortize bond premium on a taxable bond. Except as provided in paragraph (c)(3) of this section, a taxable bond is any bond other than a tax-exempt obligation. See § 1.171–4 for rules relating to the election to amortize bond premium on a taxable bond.

(3) *Bonds the interest on which is partially excludable.* For purposes of this section and §§ 1.171–2 through 1.171–5, a bond the interest on which is partially excludable from gross income (e.g., a securities acquisition loan under section 133) is treated as two instruments, a tax-exempt obligation and a taxable bond. The holder's basis in the bond and each payment on the bond are allocated between the two instruments based on the ratio of the interest excludable to the total interest payable on the bond.

(d) *Determination of bond premium*—(1) *In general.* A holder acquires a bond at a premium if the holder's basis in the bond immediately after its acquisition by the holder exceeds the sum of all amounts payable on the bond after the acquisition date (other than payments of qualified stated interest). This excess is bond premium, which is amortizable under § 1.171–2.

(2) *Additional rules for amounts payable on certain bonds.* Additional rules apply to determine the amounts payable on a variable rate debt instrument and on a bond that provides for certain alternative payment schedules. See § 1.171–3.

(e) *Basis.* A holder determines its basis in a bond under this paragraph (e). This determination of basis applies only for purposes of this section and §§ 1.171–2 through 1.171–5. Because of the application of this paragraph (e), the holder's basis in the bond for purposes of these sections may differ from the

holder's basis for determining gain or loss on the sale or exchange of the bond.

(1) *Determination of basis*—(i) *In general.* In general, the holder's basis in the bond is the holder's basis for determining loss on the sale or exchange of the bond.

(ii) *Bonds acquired in certain exchanges.* If the holder acquired the bond in exchange for other property (other than in a reorganization defined in section 368) and the holder's basis in the bond is determined in whole or in part by reference to the holder's basis in the other property, the holder's basis in the bond may not exceed its fair market value immediately after the exchange. See paragraph (f) *Example 1* of this section. If the bond is acquired in a reorganization, see section 171(b)(4)(B).

(iii) *Convertible bonds*—(A) *General rule.* If the bond is a convertible bond, the holder's basis in the bond is reduced by an amount equal to the value of the conversion option. The value of the conversion option may be determined under any reasonable method. For example, the holder may determine the value of the conversion option by comparing the market price of the convertible bond to the market prices of similar bonds that do not have conversion options. See paragraph (f) *Example 2* of this section.

(B) *Convertible bonds acquired in certain exchanges.* If the bond is a convertible bond acquired in a transaction described in paragraph (e)(1)(ii) of this section, the holder's basis in the bond may not exceed its fair market value immediately after the exchange reduced by the value of the conversion option.

(C) *Definition of convertible bond.* A convertible bond is a bond that provides the holder with an option to convert the bond into stock of the issuer, stock or debt of a related party (within the meaning of section 267(b) or 707(b)(1)), or into cash or other property in an amount equal to the approximate value of that stock or debt.

(2) *Basis in bonds held by certain transferees.* Notwithstanding paragraph (e)(1) of this section, if the bond is transferred basis property (as defined in section 7701(a)(43)) and the transferor had acquired the bond at a premium, the holder's basis in the bond is—

(i) The holder's basis for determining loss on the sale or exchange of the bond; reduced by

(ii) Any amounts that the transferor could not have amortized under this paragraph (e) or under § 1.171–4(c).

(f) *Examples.* The following examples illustrate the rules of this section.

Example 1. Bond received in liquidation of a partnership interest—(i) *Facts.* PR is a partner in partnership PRS. PRS does not have any unrealized receivables or substantially appreciated inventory items as defined in section 751. On January 1, 1997, PRS distributes to PR a taxable bond, issued by an unrelated corporation, in liquidation of PR's partnership interest. At that time, the fair market value of PR's partnership interest is $40,000 and the basis is $100,000. The fair market value of the bond is $40,000.

(ii) *Determination of basis.* Under section 732(b), PR's basis in the bond is equal to PR's basis in the partnership interest. Therefore, PR's basis for determining loss on the sale or exchange of the bond is $100,000. However, under paragraph (e)(1)(ii) of this section, PR's basis in the bond is $40,000 for purposes of this section and §§ 1.171–2 through 1.171–5.

Example 2. Convertible bond—(i) *Facts.* On January 1, 1997, A purchases for $1,100 B corporation's bond maturing on January 1, 2000, with a stated principal amount of $1,000, payable at maturity. The bond provides for unconditional payments of interest of $30 on January 1 and July 1 of each year. In addition, the bond is convertible into 15 shares of B corporation stock at the option of the holder. On January 1, 1997, B corporation's nonconvertible, publicly-traded, three-year debt with similar credit rating trades at a price that reflects a yield of 6.75 percent, compounded semiannually.

(ii) *Determination of basis.* A's basis for determining loss on the sale or exchange of the bond is $1,100. As of January 1, 1997, discounting the remaining payments on the bond at the yield at which B's similar nonconvertible bonds trade (6.75 percent, compounded semiannually) results in a present value of $980. Thus, the value of the conversion option is $120. Under paragraph (e)(1)(iii)(A) of this section, A's basis is $980 ($1,100–$120) for purposes of this section and §§ 1.171–2 through 1.171–5. The sum of all amounts payable on the bond other than qualified stated interest is $1,000. Because A's basis (as determined under paragraph (e)(1)(iii)(A) of this section) does not exceed $1,000, A does not acquire the bond at a premium.

§ 1.171–2 Amortization of bond premium.

(a) *Offsetting qualified stated interest with premium*—(1) *In general.* A holder amortizes bond premium by offsetting the qualified stated interest allocable to an accrual period with the bond premium allocable to the accrual period. This offset occurs when the holder takes the qualified stated interest into account under the holder's regular method of accounting.

(2) *Qualified stated interest allocable to an accrual period.* See § 1.446–2(b) to determine the accrual period to which qualified stated interest is allocable and to determine the accrual of qualified stated interest within an accrual period.

(3) *Bond premium allocable to an accrual period.* The bond premium allocable to an accrual period is determined under this paragraph (a)(3). Within an accrual period, the bond premium allocable to the period accrues ratably.

(i) *Step one: Determine the holder's yield.* The holder's yield is the discount rate that, when used in computing the present value of all remaining payments to be made on the bond (including payments of qualified stated interest), produces an amount equal to the holder's basis in the bond as determined under § 1.171–1(e). For this purpose, the remaining payments include only payments to be made after the date the holder acquires the bond. The yield is calculated as of the date the holder acquires the bond, must be constant over the term of the bond, and must be calculated to at least two decimal places when expressed as a percentage.

(ii) *Step two: Determine the accrual periods.* A holder determines the accrual periods for the bond under the rules of § 1.1272–1(b)(1)(ii).

(iii) *Step three: Determine the bond premium allocable to the accrual period.* The bond premium allocable to an accrual period is the excess of the qualified stated interest allocable to the accrual period over the product of the holder's adjusted acquisition price (as defined in paragraph (b) of this section) at the beginning of the accrual period and the holder's yield. In performing this calculation, the yield must be stated appropriately taking into account the length of the particular accrual period. Principles similar to those in § 1.1272–1(b)(4) apply in determining the bond premium allocable to an accrual period.

(4) *Bond premium in excess of qualified stated interest.* If the bond premium allocable to an accrual period exceeds the qualified stated interest allocable to the accrual period for that bond, the excess is carried forward to the next accrual period and offsets qualified stated interest in that accrual period to the extent of the disallowed amount. If the bond premium carried forward to an accrual period exceeds the qualified stated interest for that period, the excess is carried forward to subsequent accrual periods, beginning with the next accrual period, and is used to offset qualified stated interest in those accrual periods to the extent of the excess.

(5) *Additional rules for certain bonds.* Additional rules apply to determine the amortization of bond premium on a variable rate debt instrument and on a bond that provides for certain alternative payment schedules. See § 1.171–3.

(b) *Adjusted acquisition price.* The adjusted acquisition price of a bond at the beginning of the first accrual period is the holder's basis as determined under § 1.171–1(e). Thereafter, the

adjusted acquisition price is the holder's basis in the bond decreased by—

(1) The amount of bond premium previously allocable under paragraph (a)(3) of this section; and

(2) The amount of any payment previously made on the bond other than a payment of qualified stated interest.

(c) *Examples*. The following examples illustrate the rules of this section. Each example assumes the holder uses the calendar year as its taxable year and has elected to amortize bond premium, effective for all relevant taxable years. In addition, each example assumes a 30-day month and 360-day year. Although, for purposes of simplicity, the yield as stated is rounded to two decimal places, the computations do not reflect this rounding convention.

Example 1. Taxable bond—(i) *Facts*. On February 1, 1999, A purchases for $110,000 a taxable bond maturing on February 1, 2006, with a stated principal amount of $100,000, payable at maturity. The bond provides for unconditional payments of interest of $10,000, payable on February 1 of each year. A uses the cash receipts and disbursements method of accounting, and A decides to use annual accrual periods ending on February 1 of each year.

(ii) *Amount of bond premium*. The interest payments on the bond are qualified stated interest. Therefore, the sum of all amounts payable on the bond (other than the interest payments) is $100,000. Under § 1.171–1, the amount of bond premium is $10,000 ($110,000–$100,000).

(iii) *Bond premium allocable to the first accrual period*. Based on the remaining payment schedule of the bond and A's basis in the bond, A's yield is 8.07 percent, compounded annually. The bond premium allocable to the accrual period ending on February 1, 2000, is the excess of the qualified stated interest allocable to the period ($10,000) over the product of the adjusted acquisition price at the beginning of the period ($110,000) and A's yield (8.07 percent, compounded annually). Therefore, the bond premium allocable to the accrual period is $1,118.17 ($10,000–$8,881.83).

(iv) *Premium used to offset interest*. Although A receives an interest payment of $10,000 on February 1, 2000, A only includes in income $8,881.83, the qualified stated interest allocable to the period ($10,000) offset with bond premium allocable to the period ($1,118.17). Under § 1.1016–5(b), A's basis in the bond is reduced by $1,118.17 on February 1, 2000.

Example 2. Alternative accrual periods—(i) *Facts*. The facts are the same as in *Example 1* of this paragraph (c) except that A decides to use semiannual accrual periods ending on February 1 and August 1 of each year.

(ii) *Bond premium allocable to the first accrual period*. Based on the remaining payment schedule of the bond and A's basis in the bond, A's yield is 7.92 percent, compounded semiannually. The bond premium allocable to the accrual period ending on August 1, 1999, is the excess of the qualified stated interest allocable to the period ($5,000) over the product of the adjusted acquisition price at the beginning of the period ($110,000) and A's yield, stated appropriately taking into account the length of the accrual period (7.92 percent/2). Therefore, the bond premium allocable to the accrual period is $645.29 ($5,000 − $4,354.71). Although the accrual period ends on August 1, 1999, the qualified stated interest of $5,000 is not taken into income until February 1, 2000, the date it is received. Likewise, the bond premium of $645.29 is not taken into account until February 1, 2000. The adjusted acquisition price of the bond on August 1, 1999, is $109,354.71 (the adjusted acquisition price at the beginning of the period ($110,000) less the bond premium allocable to the period ($645.29)).

(iii) *Bond premium allocable to the second accrual period*. Because the interval between payments of qualified stated interest contains more than one accrual period, the adjusted acquisition price at the beginning of the second accrual period must be adjusted for the accrued but unpaid qualified stated interest. Therefore, the adjusted acquisition price on August 1, 1999, is $114,354.71 ($109,354.71+$5,000). The bond premium allocable to the accrual period ending on February 1, 2000, is the excess of the qualified stated interest allocable to the period ($5,000) over the product of the adjusted acquisition price at the beginning of the period ($114,354.71) and A's yield, stated appropriately taking into account the length of the accrual period (7.92 percent/2). Therefore, the bond premium allocable to the accrual period is $472.88 ($5,000 − $4,527.12).

(iv) *Premium used to offset interest*. Although A receives an interest payment of $10,000 on February 1, 2000, A only includes in income $8,881.83, the qualified stated interest of $10,000 ($5,000 allocable to the accrual period ending on August 1, 1999, and $5,000 allocable to the accrual period ending on February 1, 2000) offset with bond premium of $1,118.17 ($645.29 allocable to the accrual period ending on August 1, 1999, and $472.88 allocable to the accrual period ending on February 1, 2000). As indicated in *Example 1* of this paragraph (c), this same amount would be taken into income at the same time had A used annual accrual periods.

Example 3. Holder uses accrual method of accounting—(i) *Facts*. The facts are the same as in *Example 1* of this paragraph (c) except that A uses the accrual method of accounting. Thus, for the accrual period ending on February 1, 2000, the qualified stated interest allocable to the period is $10,000, and the bond premium allocable to the period is $1,118.17. Because the accrual period extends beyond the end of A's taxable year, A must allocate these amounts between the two taxable years.

(ii) *Amounts allocable to the first taxable year*. The qualified stated interest allocable to the first taxable year is $9,166.67 ($10,000 × 11/12). The bond premium allocable to the first taxable year is $1,024.99 ($1,118.17 × 11/12).

(iii) *Premium used to offset interest*. For 1999, A includes in income $8,141.68, the qualified stated interest allocable to the period ($9,166.67) offset with bond premium allocable to the period ($1,024.99). Under § 1.1016–5(b), A's basis in the bond is reduced by $1,024.99 in 1999.

(iv) *Amounts allocable to the next taxable year*. The remaining amounts of qualified stated interest and bond premium allocable to the accrual period ending on February 1, 2000, are taken into account for the taxable year ending on December 31, 2000.

Example 4. Tax-exempt obligation—(i) *Facts*. On January 15, 1999, C purchases for $120,000 a tax-exempt obligation maturing on January 15, 2006, with a stated principal amount of $100,000, payable at maturity. The obligation provides for unconditional payments of interest of $9,000, payable on January 15 of each year. C uses the cash receipts and disbursements method of accounting, and C decides to use annual accrual periods ending on January 15 of each year.

(ii) *Amount of bond premium*. The interest payments on the obligation are qualified stated interest. Therefore, the sum of all amounts payable on the obligation (other than the interest payments) is $100,000. Under § 1.171–1, the amount of bond premium is $20,000 ($120,000 − $100,000).

(iii) *Bond premium allocable to the first accrual period*. Based on the remaining payment schedule of the obligation and C's basis in the obligation, C's yield is 5.48 percent, compounded annually. The bond premium allocable to the accrual period ending on January 15, 2000, is the excess of the qualified stated interest allocable to the period ($9,000) over the product of the adjusted acquisition price at the beginning of the period ($120,000) and C's yield (5.48 percent, compounded annually). Therefore, the bond premium allocable to the accrual period is $2,420.55 ($9,000 − $6,579.45).

(iv) *Premium used to offset interest*. Although C receives an interest payment of $9,000 on January 15, 2000, C only receives tax-exempt interest income of $6,579.45, the qualified stated interest allocable to the period ($9,000) offset with bond premium allocable to the period ($2,420.55). Under § 1.1016–5(b), C's basis in the obligation is reduced by $2,420.55 on January 15, 2000.

§ 1.171–3 Special rules for certain bonds.

(a) *Variable rate debt instruments*. Bond premium on a variable rate debt instrument is determined by reference to the stated redemption price at maturity of the equivalent fixed rate debt instrument constructed for the variable rate debt instrument. In addition, a holder allocates bond premium on a variable rate debt instrument among the accrual periods by reference to the equivalent fixed rate debt instrument. The equivalent fixed rate debt instrument is determined as of the date the variable rate debt instrument is acquired by the holder and is constructed using the principles of § 1.1275–5(e). See paragraph (d) *Example 1* of this section.

(b) *Yield and remaining payment schedule of certain bonds subject to*

contingencies—(1) *Applicability*. This paragraph (b) provides rules that apply in determining the yield and remaining payment schedule of certain bonds that provide for an alternative payment schedule (or schedules) applicable upon the occurrence of a contingency (or contingencies). This paragraph (b) applies, however, only if the timing and amounts of the payments that comprise each payment schedule are known as of the date the holder acquires the bond (the *acquisition date*) and the bond is subject to paragraph (b)(2), (3), or (4) of this section. A bond does not provide for an alternative payment schedule merely because there is a possibility of impairment of a payment (or payments) by insolvency, default, or similar circumstances. See § 1.1275–4 for the treatment of a bond that provides for a contingency that is not described in this paragraph (b).

(2) *Remaining payment schedule that is significantly more likely than not to occur*. If, based on all the facts and circumstances as of the acquisition date, a single remaining payment schedule for a bond is significantly more likely than not to occur, this remaining payment schedule is used to determine and amortize bond premium under §§ 1.171–1 and 1.171–2.

(3) *Mandatory sinking fund provision*. Notwithstanding paragraph (b)(2) of this section, if a bond is subject to a mandatory sinking fund provision described in § 1.1272–1(c)(3) and the use and terms of the provision meet reasonable commercial standards, the provision is ignored for purposes of determining and amortizing bond premium under §§ 1.171–1 and 1.171–2.

(4) *Treatment of certain options*—(i) *Applicability*. Notwithstanding paragraphs (b) (2) and (3) of this section, the rules of this paragraph (b)(4) determine the remaining payment schedule of a bond that provides the holder or issuer with an unconditional option or options, exercisable on one or more dates during the remaining term of the bond, to alter the bond's remaining payment schedule.

(ii) *Operating rules*. A holder determines the remaining payment schedule of a bond by assuming that each option will (or will not) be exercised under the following rules:

(A) *Issuer options*. The issuer of a tax-exempt obligation is deemed to exercise or not exercise an option or combination of options in the manner that minimizes the holder's yield on the obligation. The issuer of a taxable bond is deemed to exercise or not exercise an option or combination of options in the manner that maximizes the holder's yield on the bond.

(B) *Holder options*. A holder is deemed to exercise or not exercise an option or combination of options in the manner that maximizes the holder's yield on the bond.

(C) *Multiple options*. If both the issuer and the holder have options, the rules of paragraphs (b)(4)(ii) (A) and (B) of this section are applied to the options in the order that they may be exercised. Thus, the deemed exercise of one option may eliminate other options that are later in time.

(5) *Subsequent adjustments*—(i) *In general*. Except as provided in paragraph (b)(5)(ii) of this section, if a contingency described in this paragraph (b) (including the exercise of an option described in paragraph (b)(4) of this section) actually occurs or does not occur, contrary to the assumption made pursuant to this paragraph (b) (a *change in circumstances*), then solely for purposes of section 171, the bond is treated as retired and reacquired by the holder on the date of the change in circumstances for an amount equal to the adjusted acquisition price of the bond as of that date. If, however, the change in circumstances results in a substantially contemporaneous pro-rata prepayment as defined in § 1.1275–2(f)(2), the pro-rata prepayment is treated as a payment in retirement of a portion of the bond. See paragraph (d) *Example 2* of this section. (ii) *Bond premium deduction on the issuer's call of a taxable bond*. If a change in circumstances results from an issuer's call of a taxable bond or a partial call that is a pro-rata prepayment, the holder may deduct as bond premium an amount equal to the excess, if any, of the adjusted acquisition price of the bond over the greater of the amount received on redemption or the amount payable on maturity.

(c) *Remote and incidental contingencies*. For purposes of determining and amortizing bond premium, if a bond provides for a contingency that is remote or incidental (within the meaning of § 1.1275–2(h)), the contingency is taken into account under the rules for remote and incidental contingencies in § 1.1275–2(h).

(d) *Examples*. The following examples illustrate the rules of this section. Each example assumes the holder uses the calendar year as its taxable year and, except as otherwise stated, has elected to amortize bond premium, effective for all relevant taxable years. In addition, each example assumes a 30-day month and 360-day year. Although, for purposes of simplicity, the yield as stated is rounded to two decimal places, the computations do not reflect this rounding convention.

Example 1. Variable rate debt instrument—(i) *Facts*. On March 1, 1999, E purchases for $110,000 a taxable bond maturing on March 1, 2007, with a stated principal amount of $100,000, payable at maturity. The bond provides for unconditional payments of interest on March 1 of each year based on the percentage appreciation of a nationally-known commodity index. On March 1, 1999, it is reasonably expected that the bond will yield 12 percent, compounded annually. E uses the cash receipts and disbursements method of accounting, and E decides to use annual accrual periods ending on March 1 of each year. Assume that the bond is a variable rate debt instrument under § 1.1275–5.

(ii) *Amount of bond premium*. Because the bond is a variable rate debt instrument, E determines and amortizes its bond premium by reference to the equivalent fixed rate debt instrument constructed for the bond as of March 1, 1999. Because the bond provides for interest at a single objective rate that is reasonably expected to yield 12 percent, compounded annually, the equivalent fixed rate debt instrument for the bond is an eight-year bond with a principal amount of $100,000, payable at maturity. It provides for annual payments of interest of $12,000. E's basis in the equivalent fixed rate debt instrument is $110,000. The sum of all amounts payable on the equivalent fixed rate debt instrument (other than payments of qualified stated interest) is $100,000. Under § 1.171–1, the amount of bond premium is $10,000 ($110,000–$100,000).

(iii) *Bond premium allocable to each accrual period*. E allocates bond premium to the remaining accrual periods by reference to the payment schedule on the equivalent fixed rate debt instrument. Based on the payment schedule of the equivalent fixed rate debt instrument and E's basis in the bond, E's yield is 10.12 percent, compounded annually. The bond premium allocable to the accrual period ending on March 1, 2000, is the excess of the qualified stated interest allocable to the period for the equivalent fixed rate debt instrument ($12,000) over the product of the adjusted acquisition price at the beginning of the period ($110,000) and E's yield (10.12 percent, compounded annually). Therefore, the bond premium allocable to the accrual period is $870.71 ($12,000 – $11,129.29). The bond premium allocable to all the accrual periods is listed in the following schedule:

Accrual period ending	Adjusted acquisition price at beginning of accrual period	Premium allocable to accrual period
3/1/00	$110,000.00	$870.71
3/1/01	109,129.29	958.81
3/1/02	108,170.48	1,055.82
3/1/03	107,114.66	1,162.64
3/1/04	105,952.02	1,280.27
3/1/05	104,671.75	1,409.80
3/1/06	103,261.95	1,552.44
3/1/07	101,709.51¶	1,709.51
		10,000.00

(iv) *Qualified stated interest for each accrual period.* Assume the bond actually pays the following amounts of qualified stated interest:

Accrual period ending	Qualified stated interest
3/1/00	$15,000.00
3/1/01	0.00
3/1/02	0.00
3/1/03	10,000.00
3/1/04	8,000.00
3/1/05	12,000.00
3/1/06	15,000.00
3/1/07	8,500.00

(v) *Premium used to offset interest.* E's interest income for each accrual period is determined by offsetting the qualified stated interest allocable to the period with the bond premium allocable to the period. For the accrual period ending on March 1, 2000, E includes in income $14,129.29, the qualified stated interest allocable to the period ($15,000) offset with the bond premium allocable to the period ($870.71). For the accrual period ending on March 1, 2001, the bond premium allocable to the period ($958.81) exceeds the qualified stated interest allocable to the period ($0). Therefore, the excess of $958.81 ($958.81 − $0) is carried forward to the next accrual period. For the next accrual period, the qualified stated interest for the period is insufficient to offset the bond premium allocable to the period ($1,055.82) and the amount carried forward from the prior period ($958.81). Thus, $2,014.63 ($1,055.82 + $958.81) is carried forward to the accrual period ending on March 1, 2003, and offsets qualified stated interest allocable to that period. The amount E includes in income for each accrual period is shown in the following schedule:

Accrual period ending	Qualified stated interest	Premium allocable to accrual period	Interest income	Premium carry forward
3/1/00	$15,000.00	$870.71	$14,129.29	.....
3/1/01	0.00	958.81	0.00	958.81
3/1/02	0.00	1,055.82	0.00	2,014.63
3/1/03	10,000.00	1,162.64	6,822.73	.....
3/1/04	8,000.00	1,280.27	6,719.73	.....
3/1/05	12,000.00	1,409.80	10,590.20	.....
3/1/06	15,000.00	1,552.44	13,447.56	.....
3/1/07	8,500.00	1,709.51	6,790.49	.....
		10,000.00		

Example 2. Partial call that results in a pro-rata prepayment—(i) *Facts.* On April 1, 1999, M purchases for $110,000 N's taxable bond maturing on April 1, 2006, with a stated principal amount of $100,000, payable at maturity. The bond provides for unconditional payments of interest of $10,000, payable on April 1 of each year. N has the option to call all or part of the bond on April 1, 2001, at a 5 percent premium over the principal amount. M uses the cash receipts and disbursements method of accounting.

(ii) *Determination of yield and the remaining payment schedule.* M's yield determined without regard to the call option is 8.07 percent, compounded annually. M's yield determined by assuming N exercises its call option is 6.89 percent, compounded annually. Under paragraph (b)(4)(ii)(A) of this section, it is assumed N will not exercise the call option because exercising the option would minimize M's yield. Thus, for purposes of determining and amortizing bond premium, the bond is assumed to be a seven-year bond with a single principal payment at maturity of $100,000.

(iii) *Amount of bond premium.* The interest payments on the bond are qualified stated interest. Therefore, the sum of all amounts payable on the bond (other than the interest payments) is $100,000. Under § 1.171–1, the amount of bond premium is $10,000 ($110,000–$100,000).

(iv) *Bond premium allocable to the first two accrual periods.* For the accrual period ending on April 1, 2000, M includes in income $8,881.83, the qualified stated interest allocable to the period ($10,000) offset with bond premium allocable to the period ($1,118.17). The adjusted acquisition price on April 1, 2000, is $108,881.83 ($110,000–$1,118.17). For the accrual period ending on April 1, 2001, M includes in income $8,791.54, the qualified stated interest allocable to the period ($10,000) offset with bond premium allocable to the period ($1,208.46). The adjusted acquisition price on April 1, 2001, is $107,673.37 ($108,881.83–$1,208.46).

(v) *Partial call.* Assume N calls one-half of M's bond for $52,500 on April 1, 2001. Because it was assumed the call would not be exercised, the call is a change in circumstances. However, the partial call is also a pro-rata prepayment within the meaning of § 1.1275–2(f)(2). As a result, the call is treated as a retirement of one-half of the bond. Under paragraph (b)(5)(ii) of this section, M may deduct $1,336.68, the excess of its adjusted acquisition price in the retired portion of the bond ($107,673.37/2, or $53,836.68) over the amount received on redemption ($52,500). M's adjusted basis in the portion of the bond that remains outstanding is $53,836.68 ($107,673.37 − $53,836.68).

§ 1.171–4 Election to amortize bond premium on taxable bonds.

(a) *Time and manner of making the election*—(1) *In general.* A holder makes the election to amortize bond premium by offsetting interest income with bond premium in the holder's timely filed federal income tax return for the first taxable year to which the holder desires the election to apply. The holder should attach to the return a statement that the holder is making the election under this section.

(2) *Coordination with OID election.* If a holder makes an election under § 1.1272–3 for a bond with bond premium, the holder is deemed to have made the election under this section.

(b) *Scope of election.* The election under this section applies to all taxable bonds held during or after the taxable year for which the election is made.

(c) *Election to amortize made in a subsequent taxable year*—(1) *In general.* If a holder elects to amortize bond premium and holds a taxable bond acquired before the taxable year for which the election is made, the holder may not amortize amounts that would have been amortized in prior taxable years had an election been in effect for those prior years.

(2) *Example.* The following example illustrates the rule of this paragraph (c).

Example—(i) *Facts.* On May 1, 1999, C purchases for $130,000 a taxable bond maturing on May 1, 2006, with a stated principal amount of $100,000, payable at maturity. The bond provides for unconditional payments of interest of $15,000, payable on May 1 of each year. C uses the cash receipts and disbursements method of accounting and the calendar year as its taxable year. C has not previously elected to amortize bond premium, but does so for 2002.

(ii) *Amount to amortize.* C's basis for determining loss on the sale or exchange of the bond is $130,000. Thus, under § 1.171–1, the amount of bond premium is $30,000. Under § 1.171–2, if a bond premium election were in effect for the prior taxable years, C would have amortized $3,257.44 of bond premium on May 1, 2000, and $3,551.68 of bond premium on May 1, 2001, based on annual accrual periods ending on May 1.

Thus, for 2002 and future years to which the election applies, C may amortize only $23,190.88 ($30,000–$3,257.44–$3,551.68).

(d) *Revocation of election.* The election under this section may not be revoked unless approved by the Commissioner.

Par. 6. Section 1.171–5 is added to read as follows:

§ 1.171–5 Effective date and transition rules.

(a) *Effective date*—(1) *In general.* This section and §§ 1.171–1 through 1.171–4 apply to bonds acquired on or after the date 60 days after the date final regulations are published in the Federal Register. However, if a holder makes the election under § 1.171–4 for the taxable year containing the date 60 days after the date final regulations are published in the Federal Register, this section and §§ 1.171–1 through 1.171–4 apply to bonds held on or after the first day of that taxable year.

(2) *Transition rule for use of constant yield.* Notwithstanding paragraph (a)(1) of this section, § 1.171–2(a)(3) (providing that the bond premium allocable to an accrual period is determined with reference to a constant yield) does not apply to a bond issued before September 28, 1985.

(b) *Coordination with existing election.* A holder is deemed to have made the election under § 1.171–4 if the holder elected to amortize bond premium under section 171 and that election is effective on the date 60 days after the date final regulations are published in the Federal Register.

(c) *Accounting method changes*—(1) *Consent to change.* A holder required to change its method of accounting for bond premium to comply with §§ 1.171–1 through 1.171–3 must secure the consent of the Commissioner in accordance with the requirements of § 1.446–1(e). Paragraph (c)(2) of this section provides the Commissioner's automatic consent for certain changes. A holder making the election does not need the Commissioner's consent.

(2) *Automatic consent.* The Commissioner grants consent for a holder to change its method of accounting for bond premium with respect to bonds to which §§ 1.171–1 through 1.171–3 apply. The consent granted by this paragraph (c)(2) applies provided—

(i) The holder elected to amortize bond premium under section 171 for a taxable year prior to the taxable year containing the date 60 days after the date final regulations are published in the Federal Register and that election has not been revoked;

(ii) The change is made for the first taxable year for which the holder must account for a bond under §§ 1.171–1 through 1.171–3; and

(iii) The holder attaches to its return for the taxable year containing the change a statement that it has changed its method of accounting under this section.

Par. 7. Section 1.1016–5 is amended by revising paragraph (b) to read as follows:

§ 1.1016–5 Miscellaneous adjustments to basis.

* * * * *

(b) *Amortizable bond premium.* A holder's basis in a bond is reduced by the amount of bond premium used to offset qualified stated interest income under § 1.171–2. This reduction occurs when the holder takes the qualified stated interest into account under the holder's regular method of accounting. In addition, a holder's basis in a taxable bond is reduced by the amount of bond premium allowed as a deduction under § 1.171–3(b)(5)(ii) (relating to the issuer's call of a taxable bond).

* * * * *

§ 1.1016–9 [Removed]

Par. 8. Section 1.1016–9 is removed.

Margaret Milner Richardson,

Commissioner of Internal Revenue.

[FR Doc. 96–16350 Filed 6–26–96; 8:45 am]

BILLING CODE 4830–01–P

---

26 CFR Part 1

[FI–28–96]

RIN 1545–AU39

Arbitrage Restrictions on Tax-Exempt Bonds

AGENCY: Internal Revenue Service (IRS), Treasury.

ACTION: Notice of proposed rulemaking and notice of public hearing.

SUMMARY: This document contains proposed regulations on the arbitrage restrictions applicable to tax-exempt bonds issued by state and local governments. Changes to applicable law were made by the Tax Reform Act of 1986. These proposed regulations affect issuers of tax-exempt bonds and would provide guidance for complying with the arbitrage regulations.

DATES: Written comments must be received by September 25, 1996. Requests to speak (with outlines of oral comments) at a public hearing scheduled for Thursday, October 24, 1996, at 10 a.m. must be received by October 3, 1996.

ADDRESSES: Send submissions to: CC:DOM:CORP:R (FI–28–96), room 5226, Internal Revenue Service, POB 7604, Ben Franklin Station, Washington, DC 20044. In the alternative, submissions may be hand delivered between the hours of 8 a.m. and 5 p.m. to: CC:DOM:CORP:R (FI–28–96), Courier's Desk, Internal Revenue Service, 1111 Constitution Avenue NW., Washington, DC. The public hearing will be held in the Commissioner's Conference Room, Internal Revenue Building, 1111 Constitution Avenue, NW., Washington, DC.

FOR FURTHER INFORMATION CONTACT: Concerning the proposed regulations, Loretta J. Finger, (202) 622–3980; concerning submissions and the hearing, Michael Slaughter, (202) 622–7190 (not toll-free numbers).

SUPPLEMENTARY INFORMATION:

Paperwork Reduction Act

The collections of information contained in this notice of proposed rulemaking have been submitted to the Office of Management and Budget for review in accordance with the Paperwork Reduction Act of 1995 (44 U.S.C. 3507).

Comments on the collections of information should be sent to the Office of Management and Budget, Attn: Desk Officer for the Department of the Treasury, Office of Information and Regulatory Affairs, Washington, DC 20503, with copies to the Internal Revenue Service, Attn: IRS Reports Clearance Officer, T:FP, Washington, DC 20224. Comments on the collections of information should be received by August 26, 1996.

An agency may not conduct or sponsor, and a person is not required to respond to, a collection of information unless the collection of information displays a valid control number.

The collections of information are in proposed § 1.148–5(d)(6) (v), (vi), and (vii). This information is required by the IRS to verify compliance with section 148. This information will be used to establish a rebuttable presumption that a Treasury obligation is purchased at fair market value. The likely respondents and/or recordkeepers are state or local governments. Responses to this collection of information are required to establish a rebuttable presumption that a Treasury obligation is purchased at fair market value.

Books or records relating to a collection of information must be retained as long as their contents may become material in the administration of any internal revenue law. Generally, tax returns and tax return information

are confidential, as required by 25 U.S.C. 6103.

Estimated total annual reporting and recordkeeping burden: 2,400 hours.

The estimated annual burden per respondent/recordkeeper varies from 2 hours to 30 hours, depending on individual circumstances, with an estimated average of 6 hours.

Estimated number of respondents/recordkeepers: 400.

Estimated annual frequency of responses: on occasion.

Background

This document contains proposed regulations amending the Income Tax Regulations (26 CFR part 1) under section 148 of the Internal Revenue Code to provide guidance on nonpurpose investments for purposes of arbitrage yield restrictions under section 148.

Explanation of Provisions

A. Background of Proposed Regulations

Section 148 provides rules concerning the use of proceeds of state and local bonds to acquire higher yielding investments. Section 148(a) provides that, except as otherwise permitted by section 148, interest on a state or local bond generally is tax-exempt only if the issuer invests bond proceeds at a yield not exceeding the bond yield. Section 148(f) provides, in general, that interest on a state or local bond is tax-exempt only if the issuer rebates to the United States certain earnings from investing bond proceeds at a yield exceeding the bond yield.

Section 1.148–6(c) provides that gross proceeds of an issue of bonds are not allocated to a payment for a nonpurpose investment in an amount greater than the fair market value of that investment on the purchase date. For this purpose only, the fair market value of a nonpurpose investment is adjusted to take into account qualified administrative costs allocable to that investment.

Regulations relating to the arbitrage yield restriction rules are in §§ 1.148–0 through 1.148–11 and in §§ 1.148–1T, 1.148–2T, 1.148–3T, 1.148–4T, 1.148–5T, 1.148–6T, 1.148–9T, 1.148–10T, and 1.148–11T. The proposed regulations would clarify and revise certain provisions of these regulations.

B. Bona Fide Solicitation

Section 1.148–5(d)(6)(iii) provides that the purchase price of a guaranteed investment contract is treated as its fair market value on the purchase date if the issuer makes a bona fide solicitation for a guaranteed investment contract that meets the requirements of that section. The proposed regulations would clarify that a solicitation for a guaranteed investment contract is rebuttably presumed to be bona fide if the following requirements are met: (i) If the issuer uses an agent to conduct the bidding process, the agent does not bid to provide the investment; (ii) all bidders have equal opportunity to bid so that, for example, no bidder is given the opportunity to review other bids (a last look) before bidding; and (iii) all bidders are reasonably competitive providers of investments of the type purchased.

C. Rebuttable Presumption for Establishing Fair Market Value

Section 1.148–5(d)(6)(iii) provides a safe harbor for establishing fair market value for guaranteed investment contracts. The definition of guaranteed investment contract generally does not include the purchase of investments for an escrow for an advance refunding transaction.

The proposed regulations would provide a rebuttable presumption for establishing fair market value for United States Treasury obligations purchased other than directly from the United States Treasury. The proposed regulations would apply the principles underlying the safe harbor in the regulations for establishing fair market value for guaranteed investment contracts.

D. Qualified Administrative Costs

Section 1.148–5(e)(2)(i) provides in general that, in determining payments and receipts on nonpurpose investments, qualified administrative costs are taken into account. Thus, qualified administrative costs increase the payments for, or decrease the receipts from, the investments.

The proposed regulations would provide a special rule to determine qualified administrative costs for United States Treasury obligations purchased other than directly from the United States Treasury.

Proposed Effective Dates

The regulations are proposed to apply to bonds sold on or after the date 60 days after the adoption of final regulations. In addition, these regulations are proposed to apply after that date to permit an issuer to apply these regulations to bonds to which certain other regulations under section 148 apply that were sold prior to that date.

Special Analyses

It has been determined that this notice of proposed rulemaking is not a significant regulatory action as defined in EO 12866. Therefore, a regulatory assessment is not required. It also has been determined that section 553(b) of the Administrative Procedure Act (5 U.S.C. chapter 5) and the Regulatory Flexibility Act (5 U.S.C. chapter 6) do not apply to these regulations, and, therefore, a Regulatory Flexibility Analysis is not required. Pursuant to section 7805(f) of the Internal Revenue Code, this notice of proposed rulemaking will be submitted to the Chief Counsel for Advocacy of the Small Business Administration for comment on its impact on small business.

Comments and Public Hearing

Before these proposed regulations are adopted as final regulations, consideration will be given to any written comments (a signed original and eight (8) copies) that are submitted timely to the IRS. All comments will be available for public inspection and copying.

A public hearing has been scheduled for Thursday, Ocotber 24, 1996, at 10 a.m., in the Commissioner's Conference Room, Internal Revenue Building, 1111 Constitution Avenue, NW., Washington, DC. Because of access restrictions, visitors will not be admitted beyond the Internal Revenue Building lobby more than 15 minutes before the hearing starts.

The rules of 26 CFR 601.601(a)(3) apply to the hearing.

Persons that wish to present oral comments at the hearing must submit written comments by September 25, 1996 and submit an outline of the topics to be discussed and the time to be devoted to each topic (signed original and eight (8) copies) by October 3, 1996.

A period of 10 minutes will be allotted to each person for making comments.

An agenda showing the scheduling of the speakers will be prepared after the deadline for receiving outlines has passed. Copies of the agenda will be available free of charge at the hearing.

Drafting Information

The principal author of these regulations is Loretta J. Finger, Office of Assistant Chief Counsel (Financial Institutions and Products). However, other personnel from the IRS and Treasury Department participated in their development.

List of Subjects in 26 CFR Part 1

Income taxes, Reporting and recordkeeping requirements.

Proposed Amendments to the Regulations

Accordingly, 26 CFR part 1 is proposed to be amended as follows:

PART 1—INCOME TAXES

Paragraph 1. The authority citation for part 1 continues to read as follows:

Authority: 26 U.S.C. 7805 * * *

Par. 2. Section 1.148–5 is amended by adding paragraphs (d)(6)(iv) through (d)(6)(viii) and (e)(2)(iv) to read as follows:

§ 1.148–5 Yield and valuation of investments.

* * * * *

(d) * * *

(6) * * *

(iv) *Rebuttable presumption for establishing that a solicitation for a guaranteed investment contract is bona fide.* For purposes of paragraph (d)(6)(iii)(A) of this section, a solicitation for a guaranteed investment contract is rebuttably presumed to be bona fide if the other requirements of paragraph (d)(6)(iii) of this section and the following requirements are satisfied:

(A) If the issuer uses an agent to conduct the bidding process, the agent does not bid to provide the investment;

(B) All bidders have equal opportunity to bid so that, for example, no bidder is given the opportunity to review other bids (a last look) before bidding; and

(C) All bidders are reasonably competitive providers of investments of the type purchased.

(v) *Rebuttable presumption for establishing fair market value for United States Treasury obligations purchased other than directly from the United States Treasury.* The purchase price of United States Treasury obligations that are purchased other than directly from the United States Treasury is rebuttably presumed to be the fair market value on the purchase date if all of the following requirements are satisfied:

(A) The issuer conducts in good faith a solicitation for the purchase of Treasury obligations that meets the requirements of paragraphs (d)(6)(iv)(A) through (C) of this section, and the issuer receives at least three bona fide bids from providers that have no material financial interest in the issue. For this purpose, underwriters and financial advisors for an issue are considered to have a material financial interest in the issue.

(B) The issuer purchases the highest-yielding Treasury obligations for which a qualifying bid is made.

(C) The yield on the Treasury obligations purchased is not significantly less than the yield then available from the provider on reasonably comparable Treasury obligations offered to other persons for purchase on terms comparable to those offered to the issuer from a source of funds other than gross proceeds of tax-exempt bonds. If closely comparable forward prices are not offered to other persons for purchase from a source other than gross proceeds of tax-exempt bonds, a reasonable basis for this comparison may be by reference to implied forward prices for Treasury obligations based on standard financial formulas. In general, a certificate provided by an agent conducting the bidding process detailing this comparison establishes that this comparability standard is met.

(D) In no event is the yield on any Treasury obligation purchased less than the highest yield then available on a United States Treasury security—State and Local Government Series from the United States Department of the Treasury, Bureau of Public Debt, with the same maturity.

(E) The terms of the agreement to purchase the Treasury obligations are reasonable.

(F) The issuer retains the items enumerated in paragraphs (d)(vi) and (vii) of this section with the bond documents.

(vi) *Copies.* The items described in this paragraph (d)(vi) are a copy of each of the following—

(A) The purchase agreement or confirmation and a statement detailing any oral and other terms of the agreement;

(B) The receipt or other record of the amount actually paid by the issuer for the Treasury obligations, including a statement setting out the amount of any brokerage commission, broker fee, or bidding fee paid to or by the seller of the Treasury obligations; and

(C) Each bid that is received with respect to the solicitation of the Treasury obligations (clearly stamped to show date and time when the bid was received) and a description of the bidding procedure used.

(vii) *Statement.* The item described in this paragraph (d)(vii) is a statement from the issuer, dated as of the issue date of the bonds, certifying, under penalties of perjury, that—

(A) If the issuer used an agent to conduct the bidding process, the agent did not bid to provide the investment;

(B) All bidders had equal opportunity to bid so that, for example, no bidder had an opportunity to review other bids before bidding;

(C) All bidders are reasonably competitive sellers of Treasury obligations; and

(D) The issuer received at least three bona fide bids from providers that have no material financial interest in the issue.

(viii) For purposes of paragraphs (d)(6) (v) through (vii) of this section, the term *issuer* means only the entity that actually issues the bonds and not a conduit borrower of the issuer.

(e) * * *

(2) * * *

(iv) *Special rule for United States Treasury obligations purchased other than directly from the United States Treasury.* For Treasury obligations purchased other than directly from the United States Treasury, a fee paid to a bidding agent is a qualified administrative cost only if the following requirements are satisfied:

(A) The fee must be reasonable. In general, a fee must be separately stated in order for the issuer to have a basis for determining that a fee is reasonable. The fee is presumed to be reasonable if it does not exceed .02 percent of the amount invested in Treasury obligations.

(B) The fee must be comparable to a fee that would be charged for a reasonably comparable investment of Treasury obligations if acquired with a source of funds other than gross proceeds of tax-exempt bonds. This comparability standard must be applied even if no identical investments are customarily acquired with a source of funds other than gross proceeds of tax-exempt bonds. In general, reference must be made to the bidding fees paid by investors that are not issuers of tax-exempt bonds in those transactions that are most closely comparable to the purchase of investments by the issuer of tax-exempt bonds. For example, reference to the bidding fees generally paid for the purchase of forward contracts for Treasury obligations is ordinarily a reasonable method of determining whether bidding fees are reasonable.

* * * * *

Margaret Milner Richardson,

Commissioner of Internal Revenue.

[FR Doc. 96–16378 Filed 6–26–96; 8:45 am]

BILLING CODE 4830–01–U

26 CFR Part 301

[IA–29–96]

RIN 1545–AU42

Extensions of Time To Make Elections

AGENCY: Internal Revenue Service (IRS), Treasury.

ACTION: Notice of proposed rulemaking by cross-reference to temporary regulations and notice of public hearing.

SUMMARY: In the Rules and Regulations section of this issue of the Federal Register, the IRS is issuing temporary regulations relating to extensions of time for making certain elections under the Internal Revenue Code (Code). The regulations provide the standards that the Commissioner will use to grant taxpayers extensions of time for making these elections. The text of those temporary regulations also serves as the text of these proposed regulations. This document also provides notice of a public hearing on these proposed regulations.

DATES: Written comments must be received by September 25, 1996. Outlines of oral comments to be presented at the public hearing scheduled for Wednesday, October 30, 1996, at 10 a.m. must be received by October 9, 1996.

ADDRESSES: Send submissions to: CC:DOM:CORP:R (IA–29–96), room 5226, Internal Revenue Service, POB 7604, Ben Franklin Station, Washington, DC 20044. In the alternative, submissions may be delivered between the hours of 8 a.m. and 5 p.m. to: CC:DOM:CORP:R (IA–29–96), Courier's Desk, Internal Revenue Service, 1111 Constitution Avenue NW, Washington, DC. The public hearing will be held in the IRS Classroom (room 2617), Internal Revenue Building, 1111 Constitution Avenue NW, Washington, DC.

FOR FURTHER INFORMATION CONTACT: Concerning the regulations, Robert A. Testoff of the Office of Assistant Chief Counsel (Income Tax & Accounting) at (202) 622–4960; concerning submissions and the hearing, Christina Vasquez of the Regulations Unit, (202) 622–7190 (not toll-free numbers).

SUPPLEMENTARY INFORMATION:

Paperwork Reduction Act

The collection of information contained in this notice of proposed rulemaking has been submitted to the Office of Management and Budget (OMB) for review in accordance with the Paperwork Reduction Act of 1995 (44 U.S.C. 3507).

Comments on the collection of information should be sent to the Office of Management and Budget, Attn: Desk Officer for the Department of the Treasury, Office of Information and Regulatory Affairs, Washington, DC 20503, with copies to the Internal Revenue Service, Attn: IRS Reports Clearance Officer, T:FP, Washington, DC 20224. Comments on the collection of information should be received by August 26, 1996.

An agency may not conduct or sponsor, and a person is not required to respond to, a collection of information unless the collection of information displays a valid control number.

The collection of information is in §§ 301.9100–2T and 301.9100–3T. This information is required for a taxpayer to obtain an extension of time to make an election. This information will be used by the IRS to determine whether to grant an extension of time to make an election. The likely respondents are businesses or other for-profit institutions, small businesses or organizations, nonprofit institutions, individuals or households, and farms.

Books or records relating to the collection of information must be retained as long as their contents may become material in the administration of any internal revenue law. Generally, tax returns and tax return information are confidential, as required by 26 U.S.C. 6103.

Estimated total annual reporting burden: 5,000 hours.

Estimated annual burden per respondent: 10 hours.

Estimated number of respondents: 500.

Estimated annual frequency of responses: Occasional.

Background

Temporary regulations in the Rules and Regulations section of this issue of the Federal Register amend 26 CFR part 301. The temporary regulations contain rules relating to extensions of time for making certain elections.

The text of those temporary regulations also serves as the text of these proposed regulations. The preamble to the temporary regulations explains the temporary regulations.

Special Analyses

It has been determined that this notice of proposed rulemaking is not a significant regulatory action as defined in EO 12866. Therefore, a regulatory assessment is not required. It has also been determined that section 553(b) of the Administrative Procedure Act (5 U.S.C. chapter 5) and the Regulatory Flexibility Act (5 U.S.C. chapter 6) do not apply to these regulations, and, therefore, a Regulatory Flexibility Analysis is not required. Pursuant to section 7805(f) of the Internal Revenue Code, this notice of proposed rulemaking will be submitted to the Chief Counsel for Advocacy of the Small Business Administration for comment on its impact on small businesses.

Comments and Public Hearing

Before these proposed regulations are adopted as final regulations, consideration will be given to any written comments (a signed original and eight (8) copies) that are submitted timely to the IRS. All comments will be available for public inspection and copying.

A public hearing has been scheduled for Wednesday, October 30, 1996, at 10 a.m. in the IRS Classroom (room 2617), Internal Revenue Building, 1111 Constitution Avenue NW, Washington, DC. Because of access restrictions, visitors will not be admitted beyond the building lobby more than 15 minutes before the hearing starts.

The rules of § 601.601(a)(3) apply to the hearing.

Persons that have submitted written comments by September 25, 1996 and want to present oral comments at the hearing must submit, by October 9, 1996, an outline of the topics to be discussed and the time to be devoted to each topic (signed original and eight (8) copies). A period of 10 minutes will be allotted to each person for making comments.

An agenda showing the scheduling of the speakers will be prepared after the deadline for receiving outlines has passed. Copies of the agenda will be available free of charge at the hearing.

Drafting Information

The principal author of the temporary regulations is Robert A. Testoff of the Office of Assistant Chief Counsel (Income Tax and Accounting). However, other personnel from the IRS and Treasury Department participated in their development.

List of Subjects in 26 CFR Part 301

Employment taxes, Estate taxes, Excise taxes, Gift taxes, Income taxes, Penalties, Reporting and recordkeeping requirements.

Proposed Amendments to the Regulations

Accordingly, 26 CFR part 301 is proposed to be amended as follows:

PART 301—PROCEDURE AND ADMINISTRATION

Paragraph 1. The authority citation for part 301 is amended by removing the entries for §§ 301.9100–1T through

301.9100–3T and adding entries in numerical order to read as follows:

Authority: 26 U.S.C. 7805 * * *
Section 301.9100–1 also issued under 26 U.S.C. 6081;
Section 301.9100–2 also issued under 26 U.S.C. 6081;
Section 301.9100–3 also issued under 26 U.S.C. 6081; * * *

Par. 2. Sections 301.9100–1 and 301.9100–1T through 301.9100–3T are removed.

Par. 3. Sections 301.9100–1 through 301.9100–3 are added to read as follows:

§ 301.9100–1 Extensions of time to make elections.

§ 301.9100–2 Automatic extensions.

§ 301.9100–3 Other extensions.

[The text of these above proposed sections are the same as the text of §§ 301.9100–1T through 301.9100–3T published elsewhere in this issue of the Federal Register.]

Margaret Milner Richardson,
Commissioner of Internal Revenue.

[FR Doc. 96–16377 Filed 6–26–96; 8:45 am]

BILLING CODE 4830–01–U

DEPARTMENT OF DEFENSE

Department of the Army

32 CFR Part 619

Program for Qualifying DOD, Motor Common Carriers of Perishable Subsistence and Bulk Fuel

AGENCY: Military Traffic Management Command, DOD.

ACTION: Proposed rule.

SUMMARY: This action revises the qualifications standards to the basic agreement between the Military Traffic Management Command and Motor Common Carriers for Approval to Transport General Commodities for and on behalf of U.S. Department of Defense. This action also updates the basic agreement between the Military Traffic Management Command and Motor Common Carriers for Governing the Transportation of Hazardous Material other than Class A and B Explosives for and on Behalf of the U.S. Department of Defense. The proposal to amend those qualifications, where appropriate, are submitted to be consistent with the program qualifications for DOD Motor Common Carriers of Perishable Subsistence and Bulk Fuel.

DATES: Comments must be received by July 29, 1996.

ADDRESSES: Headquarters, Military Traffic Management Command, ATTN: MTOP–Q, 5611 Columbia Pike, Falls Church, Virginia 22041–5050.

FOR FURTHER INFORMATION CONTACT: Mr. Rick Wirtz at (703) 681–6393; Headquarters, Military Traffic Management Command, ATTN: MTOP–QQ, 5611 Columbia Pike, Falls Church, Virginia 22041–5050.

SUPPLEMENTARY INFORMATION: Basic information on the Carrier Qualification Program was previously published in the Federal Register, 53 FR 17970, 54 FR 17070, 54 FR 27667, 55 FR 7361, 55 FR 52976, 56 FR 45895, and 57 FR 11376.

Executive Order 12219

This proposed rule was reviewed under Executive Order 12219 and the Secretary of the Army has classified this action as non major. The effect of the rule on the economy will be less than $100 million.

Regulatory Flexibility Act

This rule has been reviewed with regard to the requirements of the Regulatory Flexibility Act of 1980 and the Secretary of the Army has certified that this action does not have a significant impact on a substantial number of small entities. The objective of the program is to ensure that DOD obtains safe, dependable and reliable transportation services. The requirements are not designed to preclude participation by small business. Rather, they are part of a mechanism designed to ensure that the traffic offered to small businesses does not exceed their capabilities. The program's reporting and record keeping requirements are essentially administrative in nature and do not demand significant expenditures of resources such as personnel, computer equipment, or software. No professional or technical training is necessary to comply with these requirements. Alternatives to facilitate entry of small businesses have been identified and implemented.

Paperwork Reduction Act

This rule has been approved by the Office of Management and Budget as required under the requirements of the Paperwork Reduction Act of 1980 (44 U.S.C. 3507).

List of Subjects in 32 CFR Part 619

Common carriers, Freight, Motor vehicle, Safety, Shipping, and Trucks.

Accordingly, Title 32, Part 619, of the Code of Federal Regulations is amended by the following changes:

PART 619 [AMENDED]

1. The authority citation for part 619 continues to read as follows:

Authority: 49 U.S.C. 1801–1813, 2503, 2505, and 2509.

2. In § 619.4, the Insurance—Public liability and cargo text is amended by revising paragraphs (b), introductory text, (b) (3) and (4) as follows:

§ 619.4 Insurance—public liability and cargo.

* * * * *

(b) Cargo. Motor common carriers, surface freight forwarders, shipper agents and air freight forwarders must have their insurance company provide a certificate of insurance form. The deductible portion will be shown on the certificate. The insurance underwriter must have a policyholder's rating in the Best's Insurance Guide, listed in the Fiscal Service Treasury Department Circular 570, Listing of Surety Companies or specifically approved by HQMTMC. DOD's minimum cargo insurance requirements are listed below.

* * * * *

(3) Perishables carriers—$10,000 per shipment.

(4) Bulk Fuel carriers—$10,000 per shipment.

* * * * *

3. Appendix A to Part 619 is revised to read as follows:

Appendix A to Part 619—Basic Agreement Between the Military Traffic Management Command and Motor Common Carriers for Approval To Transport General Commodities for and on Behalf of U.S. Department of Defense.

1. The undersigned, who is duly authorized and empowered to act on behalf of _____ (Name of Company, Typed or Legibly Printed), hereinafter called the carrier, as a prerequisite for approval to transport general commodities for the account of the Department of Defense (DOD) and the Military Traffic Management Command (MTMC), hereinafter called the Government, agree to comply with all additional requirements, terms and conditions as set forth in this Agreement. This Agreement governs the transportation of all DOD general commodity freight administered by the Carrier Qualification Division, MTMC (except used household goods). Noncompliance by the carrier with any provision of this Agreement may result in MTMC taking action against the carrier under the Carrier Performance Program, governed by MTMC Regulation 15–1, and revoking approval to participate in this traffic. If the carrier's approval is revoked, the carrier may be disqualified from further participation in any DOD Freight Traffic.

2. Approval and Revocation. a. Carrier understands that its initial approval and

retention of approval are contingent upon establishing and maintaining, to MTMC's satisfaction, sufficient resources to support its propose scope of operations and services. Sufficient resources include equipment, personnel facilities, and finances to handle traffic anticipated by DOD/MTMC under the carrier's proposed scope of operations in accordance with the service requirements of the shipper.

b. The carrier understands that MTMC may revoke approval at any time upon discovery of grounds for ineligibility or disqualification. The carrier further understands that it is not authorized to submit tenders for shipments requiring a Transportation Protective Service (TPS) until it has served DOD in an approved status for 12 continuous months. Prior to being allowed to handle shipments which require a TPS or classes A & B explosives, the carrier must first meet any additional requirements in effect at the time.

c. In addition to the initial evaluation, the carrier agrees that it will cooperate with MTMC follow-up evaluations at any time subsequent to signing this Agreement to confirm continued eligibility.

d. The carrier certifies that neither the owners, company, corporate officials, nor any affiliation or subsidiary thereof are currently debarred or suspended, disqualified by a MTMC General Freight Board, or placed in non-use by MTMC from doing business with DOD.

3. Lawful Performance.

a. Carrier agrees to comply with all applicable Federal, State, municipal, and other local laws and regulations governing the safe, proper, and lawful operation of motor vehicles, to include Title 49 Code of Federal Regulations (CFR) 386–397. Intrastate carriers are required to comply with all applicable state or federal regulations, whichever are more stringent.

b. No fines, charges, or assessments for overload vehicles or other violations of applicable laws and regulations will be passed to or be paid by any agency of the Federal Government.

4. Operating Authority. Carrier agrees to maintain valid motor common carrier operating certificates for its scope of operations. Any carrier found to be involved in brokerage, as defined by the Interstate Commerce Commission (ICC), of DOD freight traffic will have its approval revoked.

5. Insurance. a. Minimum public liability insurance requirements are prescribed in title 49 of the Code of Federal Regulations (CFR) 5387.9. Carrier agrees to ensure that the ICC is provided proof of their public liability insurance, in the form of a BMC 91 or 91–X, or MCS 90, in accordance with sections 29 and 30 of the Motor Carrier Act of 1980. Further, the motor carrier agrees to provide MTMC with a certificate of insurance form. The certificate holder block of the form will indicate that MTMC, 5611 Columbia Pike, Falls Church, Virginia 22041–5050, ATTN: MTOP–QQ, will be notified in writing, 30 days in advance of any change or cancellation. The deductible portion will be shown on the certificate. The insurance underwriter must have a policy holder's rating of ''Excellent'' or better in the Best's Key Rating Guide.

(1) The carrier agrees to also file with MTMC proof of: $750,000 per vehicle for property (excluding hazardous) and $1,000,000 per vehicle for oil, hazardous wastes, hazardous materials and hazardous substances defined in 49 Code of Federal Regulations (CFR) 171.8 and listed in 49 CFR 172.101.

(2) Public liability insurance Intrastate Carriers—Public liability insurance shall be that as required by the state, except that for deregulated states, public liability shall be the same as that required of interstate carriers.

(3) Cargo insurance. Cargo insurance in the minimum $150,000 for loss and damages of government freight per vehicle and/or $20,000 per vehicle and/or $20,000 per vehicle transported (e.g. automobile transporters or vehicles in haulaway service) must be maintained. Perishable carriers will maintain, as a minimum, cargo insurance in the amount of $10,000 per shipment and bulk petroleum carriers will maintain $10,000 per shipment.

b. The insurance, carrier in the name of the carrier, will be in force at all times while this Agreement is in effect or until such time as the carrier cancels all tenders. The carrier agrees to ensure that the policies include a provision requiring the insurer to notify MTMC prior to any performance of service for the carrier. Charges, renewals, and cancellation notices must also be sent to MTMC, 5611 Columbia Pike, Falls Church, Virginia 22041–5050, ATTN: MTOP–QQ. This requirement applies to both interstate and intrastate carriers. Carrier's insurance policy(s) must cover all equipment used to transport DOD freight.

6. Performance Bond. a. Carrier agrees to provide MTMC with a Performance Bond. The bond secures performance and fulfillment of the carrier obligation to deliver DOD freight to destination. It will cover DOD re-procurement costs as a result of carrier default, abandoned shipments, or bankruptcy. The bond will not be utilized for operational problems such as late pick up or delivery, excessive transit time, refusals, no shows, improper/inadequate equipment or claims for lost or damaged cargo. The bond must be issued by a surety company listed in the Fiscal Service Treasury Department Circular No. 570. The bond must be completed on the form provided by MTMC. The bond will be continuous until canceled. MTMC will be notified in writing 30 days in advance of any change or cancellation. A letter of intent by the surety company is required with the initial application package. Upon MTMC approval, the carrier agrees to submit the Performance Bond before the Tender of Service will be accepted.

b. The sum of the bond will be determined as follows:

(1) Carriers having done business in their own name with DOD for 3 years or more will be required to submit a Performance Bond in the amount of 2.5% of their total DOD revenue, taken from the Freight Information Systems Report (FINS), for the previous 12 months, not to exceed $100,000 and not less than $25,000.

(2) New carriers and those carriers having done business in their own name with the DOD for less than 3 years will be required to submit a Performance Bond based on areas of service they offer. Areas of service will be computed as both origins and destinations served. 1 state (including intrastate)—$25,000; 2 to 3 states—$50,000; 4 or more states—$100,000.

(3) Once a carrier has been doing business with the DOD for 3 years, their bond requirement will change from area of service to percent revenue.

c. Bulk fuel carriers and Perishable carriers will be required to submit a $25,000 Performance Bond.

d. Local drayage and commercial zone carriers are exempt from the bond requirement.

e. If carrier has secured the Performance Bond as a result of qualifying under Ammunition and Explosive, Classes A and B program or hazardous materials, other than ammunition and explosives, Classes A and B program no additional Performance Bond is required.

7. Safety. a. Carrier will not have an ''unsatisfactory'' safety rating with the Federal Highway Administration, Department of Transportation, and, if it is an intrastate motor carrier, with the appropriate state agency. The carrier further agrees to permit unannounced safety inspections of its facilities, terminals, equipment, employees, and procedures by DOD civilian, military personnel, or DOD contract employees. The inspection may include in-transit surveillance of vehicles and drivers. The carrier agrees to provide evidence that fulfills the requirement set forth in 49 Code of Federal Regulations parts 390 through 396. Inspection of carrier equipment, drivers' records, route plans and inspection reports will be permitted during both the pickup and delivery of shipments and in coordination with local police or other authorities while in transit. Carrier also agrees to allow inspection of carrier records and individual driver qualification files. When requested, carrier agrees to provide adequate evidence of an active driver safety, security training and evaluation program. Upon request, the information to permit MTMC to verify or inspect carrier and driver records.

b. The carrier agrees to have in place a company-wide safety management program. Carrier safety program will comply with applicable Federal, State, and local statutes or requirements. Safety programs at the company-wide level may be subject to evaluation by DOD representatives.

c. The carrier agrees to notify, within 24 hours, the consignor and consignee named by the Government Bill of Lading (GBL) or Commercial Bill of Lading (CBL) of cargo loss, damage, or unusual delay. Information reported will include origin/destination, GBL/CBL number, shipping paper and other pertinent accident details. When requested, carrier agrees to furnish MTMC a copy of accident reports submitted to the Department of Transportation on Form MCS 50–T (Property).

8. Drivers Requirement. a. The carrier agrees to ensure that any driver used by the carrier to transport DOD freight possesses a valid commercial driver's license (in compliance with Federal Commercial Motor

Vehicle Safety Act of 1986) issued by his or her state of domicile. Drivers must have a minimum 1 year of driving experience driving equipment similar to that used to transport DOD freight, or have proof of graduation from an accredited trade truck motor driving school, operating the aforementioned equipment.

b. The carrier agrees to further ensure that driver carry a company picture identification card to verify affiliation with the carrier named on the Government Bill of Lading.

9. Equipment. The carrier is prohibited from using trip-leased equipment or drivers, except upon prior approval from MTMC. Leases of less than 30 days are considered trip-leases. In order to trip-lease, a carrier must apply for approval under MTMC's trip-lease program. In order to trip-lease, a carrier must apply for approval under MTMC's trip-lease program.

10. Shipment. The carrier agrees to provide, at no additional cost to the government, the status of any shipment within 24 hours after an inquiry is made. Further, the carrier agrees to not divulge any information to unauthorized persons concerning the nature and movement of any DOD shipment.

11. Documentation. a. The carrier agrees to accept GBLs and CBLs on which freight charges will be paid by the Government, and be bound by all terms stated on the SF 1103, Government Bill of Lading, regardless of the type of bill of lading tendered.

b. The carrier agrees to comply with the documentation prelodge procedures in effect at Military Ocean Terminals or the installation, when cargo is consigned for further movement overseas. (Prelodging is the submission of advance shipment documents which identifies the shipment to the Military Ocean Terminal prior to delivery of the cargo at the terminal.) Instructions will be provided by the consignor to furnish certain data at least 24 hours in advance of cargo delivery to the terminal.

12. Loss of Damage. The carrier agrees to be liable for loss or damage to cargo in accordance with the provisions of 49 U.S.C. 11707 (the Carmack Amendment to the Interstate Commerce Act). Carrier agrees to promptly settle uncontested claims for loss or damage.

13. Standard Tender of Service. a. The carrier agrees to comply with the preparation and filing instructions in applicable freight traffic rules publications issued by MTMC. Carrier understands that MTMC will reject tenders not in compliance with these instructions.

b. Carrier agrees to provide a street address where the company office is located in lieu of a post office box number. Carrier agrees to provide the address prior to or in conjunction with submission of any tenders or other rate schedules. The carrier agrees to also advise MTMC of any change in address prior to the effective date of the change. Failure to do so is grounds to discontinue use of the carriers.

c. Carrier understands that tenders inadvertently accepted and distributed for use and not in compliance with this agreement, the provisions contained in the Standard Tender of Freight Services (MT Form 364–R), or the applicable MTMC Freight Traffic Rules Publication, and supplements thereof, will be subject to immediate removal or non-use until corrections are made. The issuing carrier tender will be placed in an inactive status.

14. Rates. a. Carrier agrees to transport Government shipments at the lowest tender rate specifically applicable to the department or agency involved.

b. Carrier agrees to publish guaranteed through rates for at least 30 days. These rates must be filed with MTMC, HQ, Eastern Area, ATTN: MTE–IN, Bayonne, New Jersey 07002–5302. The carrier must publish all rates, charges, and accessorial services on a MTMC approved form, and must comply with the tender preparation instructions. (Only services annotated with a charge in the tender will be paid by the shipper.)

15. Carrier Performance. Carrier agrees that carrier's equipment, performance, and standards of service will conform with its obligations under Federal, State and local law and regulation as well as with the guidelines found in the Defense Traffic Management Regulation (DTMR) and this Agreement. The carrier fully understands its obligation to remain current in its knowledge of service standards. The carrier accepts the government's right to revoke approval, declare ineligible, non-use, or disqualify the carrier for unsatisfactory service for any operating deficiency, noncompliance with terms of this Agreement or terms of any negotiated agreements, tariffs, tenders, bills of lading or similar arrangements determining the relationship of the parties, or for the publications or assessment of unreasonable rates, charges, rules, descriptions classifications, practices, or other unreasonable provisions of tariffs/tenders. Rules governing the Carrier Performance Program are found in MTMC Regulation 15–1, and Army Regulation 55–355, DTMR. If a carrier is removed or disqualified for 6 months or more, it will have to be re-qualified.

16. General Provisions. The carrier agrees to possess a valid Standard Carrier Alpha Code (SCAC). When a company holding the appropriate authority has operating divisions each with its own unique SCAC, each such division is required to execute a separate agreement with MTMC governing the transportation of protected commodities.

17. Terms of the Agreement. a. The terms of this Agreement will be applicable to each shipment.

b. This agreement shall be effective from the date of approval by MTMC, until terminated. Termination is effective upon receipt of written notice by either party.

c. Nothing in this Agreement will be construed as a guarantee by the Government of any particular volume of traffic.

d. The carrier agrees to immediately notify MTMC of any changes in ownership, in affiliations, executive officers, and/or board members, and carrier name. Carrier understands that failure to notify MTMC shall be grounds for immediate revocation of the carrier's approval and their participation in the movement of DOD freight.

18. Additional Specialized Requirements. The terms of this Agreement will not prevent different or additional requirements with respect to negotiated agreements or added requirements for other types of service and/or commodities.

19. Inquiries. Inquiries may be referred to: Commander, Military Traffic Management Command, ATTN: MTOP–QQ, 5611 Columbia Pike, Falls Church, VA 22041–5050.

20. Carrier Acknowledgment and Acceptance. The certifying carrier official agrees to ensure that the appropriate company officials and employees are familiar with the requirements, terms, and conditions of this Agreement and are in full compliance with the applicable provisions herein. Any information found to be falsely represented in the Motor Carrier Qualification Form, the attachments or during the qualification procedures, to include additional requirements of this Agreement, shall be grounds for automatic revocation of this Agreement and immediate non-use of the carrier, the affiliated companies, divisions and entities.

I, _____
(Typed Name and Title of Carrier Official) verify under penalty of perjury under the laws of the United States of America, that the information contained in the carrier qualification application packet and this Agreement is true, correct and complete. If representing a company or organization, I certify that I am qualified and authorized to offer this information. I know that willful misstatements or omissions of material facts constitute Federal criminal violations punishable under 18 U.S.C. 1001 by up to 5 years imprisonment and fines up to $10,000 for each offense, or punishable as perjury under 18 U.S.C. 1621 by fines up to $2,000 or imprisonment up to 5 years for each offense. Further I understand the requirements of this Agreement and on behalf of

_____
(Typed Name of Carrier and MC Number) agree to comply with the terms and conditions contained herein. Signature of Carrier Official and Title

_____
Date

_____
Carrier Address

_____
Telephone number

_____
24 hr Emergency Number

(_____, _____) Interstate Operating Authority Certificate Number—MC

_____
Intrastate Operating Authority

4. Appendix C to part 619 is revised as follows:

Appendix C to Part 619—Agreement Between the Military Traffic Management Command and Motor Common Carriers Governing the Transportation of Hazardous Material Other Than Class A and B Explosives for and on Behalf of the U.S. Department of Defense.

1. I, the undersigned, who is duly authorized and empowered to act on behalf

of

_____,

hereinafter called the carrier to transport hazardous materials, (other than class A and B explosives), as defined in 49 Code of Federal Regulations (CFR) 172.3. Hazardous commodities in bulk include, but not limited to, such items as gasoline, kerosene, lubricating oil, turbine fuel and fuel oil, for the account for the DOD and the Military Traffic Management Command (MTMC), hereinafter called the Government, agrees to comply with all additional requirements, terms and conditions as set forth in this Agreement. If the carrier wishes to participate in DOD traffic, which requires a protective service, the carrier must also be a party to and in full compliance with requirements contained in the Agreement governing shipments which required a Transportation Protective Service (TPS). Noncompliance by the carrier with any provision of this or any other Agreement it is a party to will be sufficient grounds for immediate revocation of the carrier's approval to participate in the movement of hazardous materials. This carrier may also be subject to further action under the carrier Performance Program, governed by MTMC Regulation 15–1, which could result in nationwide disqualification on all DOD freight shipments.

2. Approval and Revocation. a. Carrier understands that its initial approval and retention of approval are contingent upon establishing and maintaining to MTMC's satisfaction, sufficient resources to support its proposed scope of operations and services. Sufficient resources include equipment, personnel, facilities, and finances to handle traffic anticipated by DOD/MTMC under the carrier's proposed scope of operations in accordance with the service requirements of the shipper.

b. The carrier understands that MTMC may revoke approval at any time upon discovery of grounds for ineligibility or disqualification. The carrier further understands that it is not authorized to submit tenders for shipments requiring a TPS until it has served DOD in an approved status for 12 continuous months. Prior to being allowed to handle shipments which require a TPS or class A and B explosives, the carrier must first meet any additional requirements in effect at that time.

c. In addition to the initial evaluation, the carrier agrees that it will cooperate with MTMC follow-up evaluations at any time subsequent to signing this agreement to confirm continued eligibility.

d. The carrier certifies that neither the owners, company, corporate officials, nor any affiliation or subsidiary thereof are currently debarred or suspended, disqualified by a MTMC General Freight Board, or placed in non-use by MTMC from doing business with DOD.

3. Lawful Performance. a. Carrier agrees to comply with all applicable Federal, State, municipal, and other local law and regulations governing the safe, proper, and lawful operation of motor vehicles, to include Title 49 Code of Federal Regulations (CFR) 177 and 386 through 397. Provisions for exempt intricate operations as defined in 49 CFR will not apply to the transpiration of explosives for the DOD. Intrastate carries are required to comply with all applicable state or federal regulations, whichever are more stringent.

b. No fines, charges, or assessments for overloaded vehicles or other violations of applicable laws and regulations will be passed to or be paid by any agency of the Federal Government.

4. Operating Authority. Carrier agrees to maintain valid Motor Common Carrier operating certificates for its scope of operations which is not restricted against the handling and transport of hazardous materials or ammunition and explosives, class A and B. Any carrier found to be involved in brokerage, as defined by the Interstate Commerce Commission (ICC), of DOD freight traffic will have its approval revoked.

5. Insurance. a. Minimum public liability insurance requirements are prescribed in title 49 of the Code of Federal Regulations (CFR) 387.9. Carrier agrees to ensure that the ICC is provided proof of their public liability insurance, in the form of a BMC 91 or 91–X, or MCS 90, in accordance with sections 29 and 30 of the Motor Carrier Act of 1980. Further, the Motor carrier agrees to provide MTMC with a certificate of insurance form. The certificate holder block of the form will indicate that MTMC, ATTN: MTOP–QQ, will be notified in writing, 30 days in advance of any change or cancellation. The deductible portion will be shown on the certificate. The insurance underwriter must have a policy holder's rating in the Best's Insurance Guide, listed in the Fiscal Service Treasury Department Circular 570, Listing of surety companies.

b. The carrier agrees to also file with MTMC proof of:

(1) Interstate Public Liability. Carrier will ensure that its insurance company(s) file with MTMC proof of public liability and property damage insurance for the transportation of hazardous commodities in the minimum and amounts prescribed in 49 CFR 387.9.

(2) Intrastate Public Liability. Carrier will ensure that its insurance company(s) file with MTMC proof of insurance which meets the estate requirements for public liability and property damage for the transportation of hazardous materials.

(3) Cargo Insurance. Carrier will also file with MTMC proof of $150,000 per incident minimum cargo insurance for loss and bulk fuel which is set at $10,000.

c. The insurance, carried in the name of the carrier, will be in force at all times while this Agreement is in effect or until such time as the carrier cancels all tenders. The carrier agrees to ensure that the policies include a provision requiring the insurer to notify MTMC prior to any performance of service by the carrier. Changes, renewals, and cancellation notices must be also sent to: MTMC, ATTN: MTOP–QQ. This requirement applies to both interstate and intrastate carriers. Carrier's insurance policy(s) must cover all equipment used to transport DOD freight.

6. Performance Bond. a. Carrier agrees to provide MTMC with a Performance Bond. The bond secures performance and fulfillment of the carrier obligation to deliver DOD freight to destination. It will cover DOD reprocurement costs as a result of carrier default, abandoned shipments, or bankruptcy by the carrier. The bond will not be utilized for operational problems such as late pick up or delivery, excessive transit time, refusals, no shows, improper/inadequate equipment or claims for lost or damaged cargo. The bond must be issued by a surety company listed in the Fiscal Service Treasury Department Circular No. 570. The bond must be completed on the form provided by MTMC. The bond will be continuous until canceled. MTMC will be notified in writing, 30 days in advance of any change or cancellation. A letter of intent, by the surety company, is required with the initial application package. Upon MTMC approval, the carrier agrees to submit the performance bond before the Tender of Service will be accepted.

b. The sum of the bond will be determined as follows:

(1) Carriers having done business in their own name with DOD for 3 years or more will be required to submit a Performance Bond in the amount of 2.5% of their total DOD revenue, taken from the Freight Information Systems Report (FINS), for the previous 12-months, not to exceed $100,000 and not less than $10,000.

(2) New carriers and those carriers having done business in their own name with the DOD for less than 3 years will be required to submit a Performance Bond based on areas of service they offer. Areas of service will be computed as both origins and destinations served.

1 state (including intrastate)—$10,000;
2 to 3 states—$50,000; and
4 or more states—$100,000.

(3) Once a carrier has been doing business with the DOD for 3 years, their bond requirement will change from areas of service to percent revenue.

c. Bulk fuel carriers will be required to submit a $10,000 performance bond.

d. Local drayage and commercial zone carriers are exempt from the bond requirement.

e. If carrier has secured the performance bond as a result of qualifying under the general commodity program or class A and B program, no additional performance bond is required.

7. Safety and Security. a. A ''unsatisfactory'' safety rating with the Federal Highway Administration, Department of Transportation, and/or with the appropriate state agency or commission in the case of intrastate. Safety ratings which are ''unsatisfactory,'' ''unconditional,'' ''insufficient information,'' or ''not rated'' will not be accepted. The carrier agrees to permit unannounced safety inspections of its facilities, terminals, equipment, employees, and procedures by DOD civilian, military personnel, or DOD contract employees, inspection. Inspection of carrier equipment, drivers' records, route plans and inspection reports will be permitted during both the pickup and delivery of shipments and in coordination with local police or other authorities while in transit. Carrier also agrees to allow inspection of carrier records

and individual driver qualification files. When requested, carrier agrees to provide adequate evidence of an active driver safety, security training and evaluation program. Carrier agrees to furnish, on request, driver's Social Security Numbers to verify their security clearances and allow for inspection of carrier/driver records.

b. The carrier agrees to have in place a company-wide safety and security management program which includes specific on-going safety and security programs for each terminal location. Individual terminal programs will encompass planning and execution of safety and security in routine operations, to include emergency responders and planners, and with the local police and fire authority. Carrier programs will incorporate compliance with all applicable Federal, State and local statutes or requirements. Conformance with other safety standards, such as NFPA Code 498, will be accomplished as much as possible, with compensating measures for deviations. Safety and security programs at the company wide or terminal level may be subject to evaluation by a DOD representative.

c. The carrier agrees to notify, within a reasonable period of time, the consignor and consignee names by the Government Bill of Lading (GBL) of cargo loss, damage, or unusual delay. Carrier also agrees to notify the consignor or consignee named on the GBL immediately by telephone of an accident, incident or significant delay. The information to be reported will include origin/destination, GBL number, shipping paper information, time and place of occurrence and other pertinent accident details. Carriers agrees to notify the MTMC area command annotated on the GBL and the Defense Logistics Agency (DLA), within one half (½) hour after notification of the consignor and consignee, and provide status updates as required. The MTMC HOTLINE and AOC telephone numbers are as follows:

—Eastern Area: (800) 524–0331; New Jersey only: (800) 624–1361

—Western Area: (800) 331–1822; California only: (800) 348–4639

—DLA: (800) 851–8061

When requested, carrier agrees to furnish MTMC a copy of accident reports submitted to Department of Transportation on Form MCS 50–T (Property) or MCS 50–B (Passengers) when DOD classes A and B explosives movements are involved.

d. Carrier agrees to provide the driver(s) transporting protected commodities an emergency telephone number (indicated on the last page of this Agreement) which, when used at any time (24-hours a day, 7 days a week), will reach a qualified carrier representative who will be able to provide information and assistance. MTMC will be immediately notified if this telephone number is changed. Carrier also agrees to equip the vehicle transporting the material with communications equipment (citizens band radio, mobile phone, etc.) capable of being used to obtain assistance in an emergency.

e. Carriers approved to transport DOD hazardous materials requiring TPS agree that no driver disqualified under 49 CFR 391.15 will be permitted to operate any vehicle transporting such commodities.

f. Carriers approved to transport DOD hazardous materials agree to ensure that drivers of a motor vehicle transporting such drivers of motor vehicle transporting such commodities must undergo a physical examination and must be certified physically qualified to drive a commercial motor vehicle in accordance with 49 CFR 391.43. Carrier also agrees to have driver screening programs in place to ensure that the provisions of this paragraph are met.

8. Drivers Requirement. a. Driver agrees to ensure that the driver(s) employed to transport hazardous commodities driving experience (using similar equipment prior to transporting hazardous commodities, and that its drivers are trained and competent in the movement of these commodities to include an understanding of the following: 49 CFR part 397, instructions on procedures to be followed in the event of a delay, nature of the materials being transported, precautions to be taken in an emergency; written route plans; and shipping paper entries. The carrier will certify that the driver is trained and competent in the movement of hazardous commodities, and proof of certification must be carrier in the vehicle of the unit transporting these commodities.

b. The carrier agrees to further ensure that driver(s) carry a valid commercial motor vehicle operator's license issued by his/her state of domicile, a certificate of physical examination issued during the preceding 24 months, and an employee record card, or similar document, one of which must contain the driver's photograph. The driver(s) must be 21 years of age. The driver(s) must carry a company picture identification to verify affiliation with the carrier named on the GBL.

9. Equipment. a. Trip leased equipment, with or without drivers, will not be used to transport hazardous materials for the account of the DOD. Exceptions for the use of intermittent or occasional drivers in 49 CFR 391.63 will not apply to any DOD movement. Any equipment, with or without drivers, leased to augment carrier-owned equipment will be on a not less than 90-day noncancellable basis.

b. A copy of the equipment lease agreement must be carried in the vehicle of the unit transporting these commodities. (Facsimile, Xerox, or otherwise reproduced copies are not acceptable.) Interchange agreements which originate at origin will be considered trip leases and will not be accepted. The lease must be complete at time of pick up and should require no further information to be completed by the driver. Failure to comply with this requirement or attempted abuse of this requirement could result in the carrier's participation in this type traffic to be immediately revoked and up to a nationwide disqualification on all DOD freight shipments should further action under the Carrier Performance Program be deem appropriate.

c. Carriers approved to transport DOD hazardous material requiring TPS agree to comply with all equipment requirements contained in paragraph 8 of the Agreement Between the Military Traffic Management Command and Motor Carriers Governing the Transportation of Shipments Which Require a Transportation Protective Service for and on behalf of the U.S. Department of Defense.

10. Shipment. a. Carrier is responsible for shipments from origin to ultimate destination. The carrier also remains responsible for shipments placed in a safe haven or refuge location. Carrier agrees not to disclose any information to unauthorized persons concerning the nature, kind, quantity, destination, consignee or routing of any hazardous material shipment tendered to it. The carrier further agrees to provide, at no additional cost to the Government, the status of any shipment within 24-hours after an inquiry is made.

b. Carrier agrees to ensure that shipper-provided placards are displayed in accordance with the general requirements found in 49 CFR 172.504 for the transportation of hazardous materials. The carrier further agrees to conform to the requirements found in 49 CFR 177.825 pertaining to the transportation of radioactive materials for which placarding is required. Carrier also agrees to route all other shipments of hazardous commodities in accordance with the provisions of 49 CFR 397.9.

c. When requested by the shipper for reasons of security, carrier agrees to cover the shipment with a carrier-provided tarpaulin. Protective tarping is an accessorial service.

d. Carriers approved to transport DOD hazardous materials requiring TPS agree to comply with all shipment requirements contained in paragraph 9 of the Agreement Between the Military Traffic Management Command and Motor Common Carriers Governing the Transportation of Shipments Which Require a Transportation Protective Service (TPS) for and on behalf of the U.S. Department of Defense.

11. Documentation. a. The carrier agrees to accept GBLs on which freight charges will be paid by the Government, and bound by all terms stated on the Standard Form (SF)–1103, GBL, regardless of the type of bill of lading tendered.

b. The carrier will comply with the documentation prelodge procedures in effect at Military Ocean Terminals or the installation, when cargo is consigned for further movement overseas. (Prelodging is the submission of advance shipment documents which identifies the shipment to the Military Ocean Terminal prior to delivery of the cargo at the terminal.) Instructions will be provided by the consignor to furnish certain data at least 24-hours in advance of cargo delivery to the terminal.

12. Loss or Damage. The carrier agrees to be liable for loss or damage to cargo in accordance with the provisions of 49 U.S.C. 11707 (the Carmack Amendment to the Interstate Commerce Act.) Carrier agrees to promptly settle uncontested claims for loss or damage.

13. Standard Tender of Service. a. The carrier agrees to comply with the preparation and filing instructions in applicable freight traffic rules publications issued by MTMC. Carrier understands that MTMC will reject tenders not in compliance with these instructions.

b. Carrier agrees to provide a street address where the company office is located in lieu of post office box number. Carrier agrees to provide the address prior to or in conjunction

with submission of any tenders or other rate schedules. The carrier agrees to also advise MTMC of any change in address prior to the effective date of the change. Failure to do so is grounds to discontinue use of the carriers.

c. Carrier understands that tenders inadvertently accepted and distributed for use and not in compliance with this agreement, the provisions contained in the Standard Tender of Freight Services (MT Form 364–R), or the application MNC Freight Traffic Rules Publication, and supplements thereof, will be subject to immediate removal or non-use until corrections are made. The issuing carrier will be advised when tenders are removed under these circumstances.

14. Rates. a. Carrier agrees to transport shipments at the lowest tender rate specifically applicable to the department or agency involved.

b. The carrier's rates must be on file with MTMC, HQ Eastern Area, ATTN: MTE–IN, Bayonne, New Jersey 07002–5302. The carrier must publish all rates, charges, and accessorial services on a ''Department of Defense Standard Tender of Freight Services'' MT Form 364–R and must comply with the tender preparation instructions. (Only services annotated with a charge in the tender will be paid by the shipper.)

15. Carrier Performance. Carrier agrees that carrier's equipment, performance and status of service will conform with its obligations under Federal, State and local law and regulation as well as with the guidelines found in the Defense Traffic Management Regulation (DTMR) and this Agreement. The carrier fully understands its obligation to remain current in its knowledge of service standards. The carrier accepts the Government's right to revoke approval, declare ineligible, non-use, or disqualify the carrier for unsatisfactory service for any operating deficiency, noncompliance with the terms of this Agreement or terms of any negotiated agreements, tariffs, tenders, bills of lading or similar arrangements determining the relationship of the parties, or for the publication of unreasonable rates, charges, rules, descriptions, classifications, practices, or other unreasonable provisions of tariffs/tenders. Rules governing the Carrier Performance Program are found in MTMC Regulation 15–1, and Army Regulations 55–355 DTMR. If a carrier is removed or disqualified for 6 months or more, it will have to be re-qualified.

16. General Provisions. The carrier must possess a valid Standard Carrier Alpha Code (SCAC). When a company holding the appropriate authority has operating divisions, each with its own unique SCAC, each such division is required to execute a separate agreement with MTMC governing the transportation of protected commodities.

17. Terms of the Agreement. a. The terms of this Agreement will be applicable to each shipment.

b. This agreement shall be effective from the date of approval by MTMC, until terminated. Termination is effective upon receipt of written notice by either party.

c. Nothing in this Agreement will be construed as a guarantee, by the Government, of any particular volume of traffic.

d. The carrier agrees to immediately notify MTMC of any changes in ownership, in affiliations, executive officers, and/or board members, and carrier name. Carrier understands that failure to notify MTMC shall be grounds for immediate revocation of the carrier's approval and their participation in the movement of DOD freight.

18. Additional Specialized Requirements. The terms of this Agreement will not prevent different or additional requirements with respect to negotiated agreements or added requirements for other types of service and/or commodities.

19. Inquiries. Inquiries may be referred to: Commander, MTMC, Attn: MTOP–QQ, Falls Church, Virginia 22041–5050.

20. Carrier Acknowledgment and Acceptance. The certifying carrier official agrees to ensure that the appropriate company officials and employees are familiar with the requirements, terms and conditions of this Agreement and are in full compliance with the applicable provisions herein. Any information found to be falsely represented in the Motor Carrier Qualification Form, the attachments or during the qualification procedures, to include additional requirements of this Agreement, shall be grounds for automatic revocation of this Agreement and immediate non-use of the carrier, the affiliated companies, division and entities, I,

_____,

verify under penalty of perjury under the laws of the United States of America, that the information contained in the carrier qualification application packet and this Agreement is true, correct and complete. If representing a company or organization, I certify that I am qualified and authorized to offer this information. I know that willful misstatements or omissions of material facts constitute Federal criminal violations punishable under 18 U.S.C. 1001 by up to 5 years imprisonment and fines up to $10,000 for each offense, or punishable as perjury under 18 U.S.C. 1621 by fines up to $2,000 or imprisonment up to 5 years for each offense. Further, I understand the requirements of this Agreement and on behalf of:

_____

(Typed Name of Carrier and MC Number) agree to comply with the terms and conditions contained herein.

_____

(Signature of Carrier Official and Title)

Signature of Agent Official and Title:

_____

_____

Date: _____

Address: _____

Telephone Number: (_____) ____

24-Hr Emergency Number: _____ (_____)

Interstate Operating Authority Certificate Number—MC: _____

Intrastate Operating Authority: _____

Certificate Number(s) Include: _____

Issuing State—For Example: _____

PA—#12345

Military Traffic Management Command Acknowledgment/Acceptance

Signature and Title:

_____

Date Approved: _____

Gregory D. Showalter,

Army Federal Register Liaison Officer.

[FR Doc. 96–16147 Filed 6–26–96; 8:45 am]

BILLING CODE 3710–08–M

ENVIRONMENTAL PROTECTION AGENCY

40 CFR Part 52

[GA–30–3–9615b; FRL–5519–1]

Approval and Promulgation of Implementation Plans; Approval of Revisions to the State Implementation Plan; Georgia

AGENCY: Environmental Protection Agency (EPA).

ACTION: Proposed rule.

SUMMARY: EPA is approving the State Implementation Plan (SIP) revision submitted by the State of Georgia through the Department of Natural Resources, Environmental Protection Division (GA EPD) for the purpose of deleting the volatile organic compound (VOC) reasonably available control technology (RACT) rule for Perchloroethylene Dry Cleaners. In the final rules section of this Federal Register, the EPA is approving the State's SIP revision as a direct final rule without prior proposal because the Agency views this as a noncontroversial revision amendment and anticipates no adverse comments. A detailed rationale for the approval is set forth in the direct final rule. If no adverse comments are received in response to that direct final rule, no further activity is contemplated in relation to this proposed rule. If EPA receives adverse comments, the direct final rule will be withdrawn and all public comments received will be addressed in a subsequent final rule based on this proposed rule. The EPA will not institute a second comment period on this document. Any parties interested in commenting on this document should do so at this time.

DATES: To be considered, comments must be received by July 29, 1996.

ADDRESSES: Written comments on this action should be addressed to Scott M. Martin at the EPA Regional Office listed below.

Copies of the documents relative to this action are available for public inspection during normal business hours at the following locations. The interested persons wanting to examine these documents should make an appointment with the appropriate office at least 24 hours before the visiting day.

Air and Radiation Docket and Information Center (Air Docket 6102), U.S. Environmental Protection Agency, 401 M Street, SW, Washington, DC 20460.

Environmental Protection Agency, Region 4, Air Programs Branch, 345 Courtland Street, NE, Atlanta, Georgia 30365.

Air Protection Branch, Georgia Environmental Protection Division, Georgia Department of Natural Resources, 4244 International Parkway, Suite 120, Atlanta, Georgia 30354.

FOR FURTHER INFORMATION CONTACT: Scott M. Martin, Regulatory Planning and Development Section, Air Programs Branch, Air, Pesticides & Toxics Management Division, Region 4 Environmental Protection Agency, 345 Courtland Street, NE, Atlanta, Georgia 30365. The telephone number is 404/347–3555, X4216. Reference file GA–30–3–9615.

SUPPLEMENTARY INFORMATION: For additional information see the direct final rule which is published in the rules section of this Federal Register.

Dated: April 19, 1996.

A. Stanley Meiburg,

Acting Regional Administrator.

[FR Doc. 96–16342 Filed 6–26–96; 8:45 am]

BILLING CODE 6560–50–P

---

40 CFR Part 60

[AD–FRL–5525–5]

RIN 2060–AG33

Standards of Performance for New Stationary Sources for Nonmetallic Mineral Processing Plants; Amendments

AGENCY: Environmental Protection Agency (EPA).

ACTION: Proposed rule and notice of public hearing.

SUMMARY: This action proposes revisions and clarifications to several provisions of the standards of performance for nonmetallic mineral processing plants, which were promulgated in the Federal Register on August 1, 1985 (50 FR 31328). On January 26, 1995, the National Stone Association petitioned EPA to review the existing standards. These revisions are in keeping with President Clinton's Regulatory Reinvention Initiative. The intended effect of this action is to reduce the costs of emission testing and reporting and recordkeeping. The affected industries and numerical emission limits remain unchanged except for individual, enclosed storage bins.

A public hearing will be held, if requested, to provide interested persons an opportunity for oral presentation of data, views, or arguments concerning the proposed revised standards.

DATES: *Comments.* Comments must be received on or before August 26, 1996.

Public Hearing. If anyone contacts EPA requesting to speak at a public hearing by July 23, 1996, a public hearing will be held on August 5, 1996 beginning at 10 a.m. Persons interested in attending the hearing should call Ms. Cathy Coats at (919) 541–5422 to verify that a hearing will be held.

Request to Speak at Hearing. Persons wishing to present oral testimony must contact EPA by July 23, 1996 (contact Ms. Cathy Coats at (919) 541–5422.)

ADDRESSES: *Comments.* Comments should be submitted (in duplicate if possible) to: The Air and Radiation Docket and Information Center (MC–6102), ATTN: Docket No. A–95–46, U.S. Environmental Protection Agency, 401 M Street, SW, Washington, DC 20460.

Commenters wishing to submit proprietary information for consideration should clearly distinguish such information from other comments, and clearly label it ''Confidential Business Information.'' Submissions containing such proprietary information should be sent directly to the following address, and not to the public docket, to ensure that proprietary information is not inadvertently placed in the docket: Attention: Mr. William Neuffer, c/o Ms. Melva Toomer, U.S. EPA Confidential Business Information Manager, OAQPS/MD–13; Research Triangle Park, North Carolina 27711. Information covered by such a claim of confidentiality will be disclosed by the EPA only to the extent allowed and by the procedures set forth in 40 CFR Part 2. If no claim of confidentiality accompanies a submission when it is received by the EPA, the submission may be made available to the public without further notice to the commenter.

Docket. Docket No. A–95–46, containing supporting information used in developing the proposed revisions is available for public inspection and copying between 8:00 a.m. and 4:00 p.m., Monday through Friday, at the Air and Radiation Docket and Information Center (MC–6102), U.S. Environmental Protection Agency, 401 M Street, SW, Washington, DC 20460; telephone (202) 260–7548, fax (202) 260–4000. A reasonable fee may be charged for copying.

FOR FURTHER INFORMATION CONTACT: Mr. William Neuffer at (919) 541–5435, Emission Standards Division (MD–13), U.S. EPA, Research Triangle Park, North Carolina 27711.

SUPPLEMENTARY INFORMATION:

Regulated Entities

Entities potentially regulated by EPA's final action on this proposed rule are new, modified, or reconstructed affected facilities in nonmetallic mineral processing plants. These categories and entities include:

Category	Examples
Industry	Crushed and broken stone, sand and gravel, clay, rock salt, gypsum, sodium compounds, pumice, gilsonite, talc and pyrophyllite, boron, barite, fluorospar, feldspar, diatomite, perlite, vermiculite, mica, kyanite processing plants

This table is not intended to be exhaustive, but rather provides a guide for readers regarding entities likely to be regulated by final action on this proposal. This table lists the types of entities that EPA is now aware could potentially be regulated by final action on this proposal. Other types of entities not listed in the table could also be regulated. To determine whether your facility is regulated by final action on this proposal, you should carefully examine the applicability criteria in § 60.670 of the rule. If you have questions regarding the applicability of this action to a particular entity, consult the person listed in the preceding **FOR FURTHER INFORMATION CONTACT** section.

The information presented in this preamble is organized as follows:

I. Background
II. Summary and Rationale for Proposed Revisions to NSPS
III. Administrative Requirements
A. Public Hearing
B. Docket
C. Clean Air Act Procedural Requirements
D. Office of Management and Budget Reviews
1. Paperwork Reduction Act
2. Executive Order 12866
3. Unfunded Mandates Act of 1995
E. Regulatory Flexibility Act Compliance

I. Background.

Standards of performance for nonmetallic mineral processing plants were promulgated in the Federal Register on August 1, 1985 (50 FR 31328). These standards implement section 111 of the Clean Air Act and require all new, modified, and reconstructed nonmetallic mineral processing plants to achieve emission levels that reflect the best demonstrated system of continuous emission

reduction, considering costs, nonair quality health, and environmental and energy impacts.

The promulgated standards apply to new, modified, and reconstructed facilities at plants that process any of the following 18 nonmetallic minerals: crushed and broken stone, sand and gravel, clay, rock salt, gypsum, sodium compounds, pumice, gilsonite, talc and pyrophyllite, boron, barite, fluorospar, feldspar, diatomite, perlite, vermiculite, mica, and kyanite. The affected facilities are each crusher, grinding mill, screening operation, bucket elevator, belt conveyor, bagging operation, storage bin, and enclosed truck or railcar loading station.

On January 26, 1995, the National Stone Association (NSA) petitioned the EPA, pursuant to the Clean Air Act and the Administrative Procedures Act, to review the existing NSPS for nonmetallic mineral processing plants (40 CFR part 60, subpart OOO). In its petition, NSA and its member companies requested the EPA to review and consider revising, in particular, the provisions in the NSPS that pertain to the test methods and procedures. Also, NSA requested that several of the recordkeeping and reporting requirements be reduced or eliminated.

II. Summary and Rationale for Proposed Revisions to NSPS

A. Summary of Proposed Revisions

As a result of the EPA's review of concerns raised by NSA and its member companies and discussions with State and Local air pollution control agencies, the Administrator has concluded that several revisions to the NSPS are warranted. The following is a brief summary of the proposed revisions to the NSPS, followed by a discussion of the basis for the proposed revisions.

1. Section 60.670, Applicability and designation of affected facility, is being revised:

a. To clarify that facilities located in underground mines are not subject to the NSPS;

b. To exempt wet screening operations from all requirements of the NSPS, except the recordkeeping and reporting requirements in § 60.676(g).

c. To clarify within subpart OOO which General Provisions (40 CFR Part 60, subpart A) requirements apply to owners and operators of affected facilities subject to the NSPS. A table has been included to clarify the applicable General Provisions requirements.

2. Section 60.671, Definitions, is being revised to add a definition of ''wet screening operation.''

3. Section 60.672, Standard for particulate matter, is being revised:

a. To state the particulate matter standard for an individual, enclosed storage bin ducted to a single control device.

b. To clarify that affected facilities are subject to a standard for stack emissions of particulate matter *and* a stack opacity standard.

4. Section 60.675, Test methods and procedures, is being revised:

a. To reduce the duration of Method 9 observations of fugitive emissions for compliance for any affected facility from 3 hours (30 6-minute averages) to 1 hour (10 6-minute averages) if there are no individual readings greater than 10% opacity and there are no more than 3 individual readings of 10% opacity during the 1 hour test period.

b. To allow the use of Method 9, in lieu of Method 5, for determining compliance for fabric filter collectors controlling particulate matter emissions from an individual, enclosed storage bin ducted to a baghouse that only controls emissions from this bin. For compliance purposes, the duration of the Method 9 observations for any baghouse controlling an individual, enclosed storage bin will be 1 hour (10 6-minute averages).

c. To reduce the General Provisions (section 60.8(d)) notification requirement from 30 days to 7 days prior notice of any rescheduled performance test if there is a delay in conducting any previously scheduled performance test for which 30 days notice has been supplied under this NSPS.

5. Section 60.676, Reporting and recordkeeping, is being revised:

a. To delete the requirement to report ''like-for-like replacements'' of equipment to the Director, Emission Standards Division (section 60.676(b)).

b. To waive the requirement in the General Provisions (section 60.7(a)(2)) for notification of the anticipated date of initial startup of an affected facility.

c. To allow a single notification of the actual date of initial startup of a combination of affected facilities in a production line that begin initial startup simultaneously, in lieu of multiple notifications of the actual date of initial startup of individual affected facilities. The notification must include a description of each affected facility, equipment manufacturer, and serial number, if available.

B. Rationale for Proposed Revisions to NSPS

1. Applicability

a. As a result of past inquiries from some plant owners and operators as to whether crushers or any other equipment used in nonmetallic mineral processing that are located in underground mines are subject to the NSPS, the EPA is clarifying its intent by adding language to the regulation to state that this NSPS does not apply to facilities located in underground mines. Emissions from crushers or other facilities in underground mines are vented in the general mine exhaust and cannot be distinguished from emissions from drilling and blasting operations which are not covered by the standards. Therefore, the EPA is clarifying its intent that crushers and other facilities located in underground mines not be regulated under the NSPS (§ 60.670(a)).

b. The EPA is also proposing a revision to § 60.670(a), which states that the provisions of the NSPS do not apply, except for one-time recordkeeping and reporting, to wet screening operations and associated belt conveyors downstream of the wet screening operation in the production line up to, but not including, the next crusher, grinding mill or dry screening operation in the production line of a nonmetallic minerals processing plant. For further clarification, ''wet screening operation'' is being defined in the regulation as ''a screening facility designed and operated at all times to remove unwanted material from the product by a washing process whereby the product is completely saturated with water.'' There is no potential for air emissions from either screening or conveying operations in the wet/wash end of a processing plant unless a crusher, grinding mill or dry screeening operation is included in the process. Therefore, wet screening operations are not subject to the provisions of §§ 60.672, 60.674, and 60.675 under this regulation (subpart OOO) or the General Provisions (subpart A). The only requirement for wet screening operations is a one-time recordkeeping and reporting requirement under section 60.676(g) of the NSPS.

It is possible, however, that a screening facility/operation may be operated as wet screening at one location where a washing process is used to remove unwanted material from the product; later, at the same location or after movement to another location, it may no longer operate as wet screening. In these cases, where it ceases operating as a wet screen, applicability of all the provisions of this regulation would be triggered and the screening operation would become an affected facility subject to all of the requirements of this regulation and the General Provisions (Subpart A). For tracking purposes, a one-time

recordkeeping and reporting requirement for wet screening operations has been added to the NSPS (§ 60.676(g)).

c. The NSA and its member companies requested clarification of the applicable General Provisions (40 CFR part 60, subpart A) requirements for owners and operators of affected facilities subject to this NSPS (Subpart OOO). They stated that many of their members were unaware that the General Provisions (40 CFR part 60, subpart A) existed or applied in addition to this NSPS. Therefore, in an effort to facilitate an awareness and a better understanding of the General Provisions requirements and implementation of those requirements, the EPA is adding a table to the regulation (subpart OOO) that specifies the provisions of subpart A that apply and those that do not apply to owners and operators of affected facilities subject to Subpart OOO.

2. Standard for Particulate Matter

In the past, there have been several requests for clarification of § 60.672(a) of the regulation regarding whether owners or operators of affected facilities are subject to both a standard for stack emissions of particulate matter *and* a stack opacity standard. The preamble for the promulgated rule clearly states that affected facilities are subject to both the stack emission limit and stack opacity standard (50 FR 31329-first column; August 1, 1985). Therefore, the word ''or'' at the end of paragraph (a)(1) in § 60.672 has been deleted to remove any ambiquity in the requirements.

3. Test Methods and Procedures

a. One of the concerns of the NSA and its member companies was the duration of Method 9 testing (3 hours for each fugitive-type emission source) for fugitive emissions from affected facilities such as crushers and belt conveyor transfer points, in situations when almost all 15-second observations are observed to be 0 percent opacity. They asserted that usually no emissions were observed from these affected facilities (when properly maintained and operated) during the Method 9 observations, and therefore they did not believe that 3 hours of observations were justified or necessary for determining compliance. Due to the large number of these affected facilities at nonmetallic mineral processing plants, the amount of time and the cost for Method 9 observations from these sources were considered by NSA to be very burdensome.

The General Provisions (§ 60.11(b)) require 3 hours (30 6-minute averages) of Method 9 observations for determining compliance for fugitive emission sources. However, after review and evaluation of data submitted by the industry, the EPA has decided to reduce the Method 9 testing duration for observing fugitive emissions from any affected facility subject to this NSPS from 3 hours (30 6-minute averages) to 1 hour (10 6-minute averages) if there are no individual readings greater than 10% opacity and there are no more than 3 individual readings of 10% opacity during this first hour.

The data submitted to the EPA by industry for review was compiled from several hundred visible emission tests conducted by the industry for each type of affected facility subject to the NSPS. The majority (52 percent) of the visible emission tests were conducted for belt conveyor transfer points. The data included opacity readings from 58 different 3 hour tests. For the first hour, the test results showed that 51 of the 58 3-hour tests had no individual readings of 10 percent or greater. Only 3 belt conveyor transfer points had individual readings greater than 10%. Only 5 belt conveyor transfer points had more than 3 individual readings of 10%. The most obvious result obtained from the tests was the consistency of the readings from hour to hour. Readings during the first hour of testing were in line with readings taken during hours 2 and 3. If a problem existed at a transfer point or other fugitive emission source, it would be evident during the first hour of testing. Therefore, for these reasons, EPA believes that 1 hour (10 6-minute averages) of Method 9 observations is sufficient for any affected facility to show compliance with the fugitive emission standard if there are no individual readings greater than 10% opacity and there are no more than 3 individual readings of 10% opacity during the first hour.

b. Also of concern to NSA and its members is the requirement in the NSPS for Method 5 testing of fabric filter collectors (baghouses) controlling particulate matter emissions from individual, enclosed storage bins ducted to a single baghouse. They requested that individual, enclosed storage bin emissions be exempted from Method 5 testing because the baghouse outlet is not amenable to Method 5 testing due to the intermittent nature of individual storage bin operations and the small air flow rates.

Information supplied by NSA indicates that Method 5 testing cannot be performed for baghouses that only control emissions from individual, enclosed storage bins unless the emissions are combined with emissions from other storage bins or other affected facilities in order to determine compliance. Therefore, the EPA is proposing to exempt a baghouse that only controls emissions from an individual, enclosed storage bin from Method 5 stack emission testing. Compliance for an individual, enclosed storage bin ducted to a single baghouse will be determined by Method 9 (§ 60.672(f)). For compliance purposes, one hour (10 6-minute averages) of Method 9 observations will be required for each individual, enclosed storage bin. Multiple storage bins with combined stack emissions controlled by a baghouse are subject to Method 5 testing and concurrent Method 9 testing as required under § 60.672(g).

c. The General Provisions (§ 60.8(d)) require 30 days prior notice of any performance test, ''* * * except as specified under other subparts * * *.'' In cases where a performance test must be rescheduled, due to operational problems, etc., it is not always reasonable or necessary to provide 30 days prior notice to EPA or the State of the new date of the performance test. Based on conversations with personnel who are affected by the notification of the new date of the performance test (i.e., personnel at EPA Regional Offices and State agencies), the EPA has determined that after the initial 30-day notification, then notice provided 7 days prior to a rescheduled test is sufficient time to provide the Regional, State or Local agencies the opportunity to have an observer present. Therefore, § 60.675 has been revised to reflect this allowance.

4. Reporting and Recordkeeping

a. Under the promulgated standards, the replacement of an existing facility with a new facility of equal or smaller size and having the same function (like-for-like replacement) is exempt from compliance with the emission limits of the NSPS (§ 60.670(d)(1)). In order to qualify for this exemption, an owner or operator replacing an existing facility with a new facility of equal or smaller size must report this to the EPA Regional Offices and to the States (if the particular State has been delegated NSPS authority). This information and additional information is also required to be reported to the Director of the Emission Standards Division of EPA in order to assess the frequency and characteristics of such replacements.

The EPA has reviewed this requirement and has determined that the report to the Director of the Emission Standards Division is no longer needed for like-for-like replacements. Therefore, in an effort to streamline the reporting requirements of

this NSPS, this requirement in § 60.676(b) has been deleted. However, the information requested under § 60.676(a) is still required to be reported to EPA Regional Offices, and State or local agencies if they have received NSPS delegation authority.

b. The EPA has also reviewed the General Provisions requirement (§ 60.4(a)) for owners and operators of affected facilities to send copies of all requests, reports, applications, submittals and other communications to the appropriate EPA Regional Office in cases where the State has been delegated authority to enforce the NSPS. In these cases, some EPA Regional Offices will consider waiver of this requirement for affected facilities subject to this subpart on a plant-by-plant basis. The method for accomplishing this reporting reduction on a plant-by-plant basis would be through the Operating Permit for the individual plant. Thus, some plants have an option available to them for further reporting reductions.

c. The General Provisions (§ 60.7(a)(2)) also require a notification of the anticipated date of initial startup for new affected facilities. After reviewing this requirement, the EPA has determined that this notification can be waived for owners and operators of affected facilities subject to this NSPS without affecting the enforcement of this regulation. Due to the large number of plants being regulated under this regulation, the deletion of this reporting requirement under this subpart is being made for purposes of streamlining and further reduction of the reporting burden on both large and small plant owners or operators.

d. The General Provisions [section 60.7(a)(3)] require a notification of the actual date of initial startup for each affected facility within the plant. The NSA and its member companies requested the EPA to review this requirement as it pertains to owners and operators of the nonmetallic minerals processing NSPS. They cited the examples of the addition of several new affected facilities being added to a production line or the addition of a whole new production line, and they requested whether, for notification purposes only, a single notification of the actual date of initial startup could be submitted for all of these affected facilities, in lieu of several separate notifications.

After a review of this situation, the EPA has determined, for notification purposes only, that a single notification of the actual date of initial startup of a combination of affected facilities in a production line that begin initial startup simultaneously would be acceptable. The notification must include a description of each affected facility, equipment manufacturer, and serial number of the equipment, if available, for future compliance purposes. A single notification for multiple affected facilities starting production at the same time would have no adverse impact on enforcement of the standards. Therefore, in an effort to further reduce the reporting and recordkeeping requirements of this regulation, section 60.676 has been revised to reflect this allowance.

This revision would also benefit the EPA and State and local agencies in terms of reducing staff review time for numerous single notifications of the actual date of initial startup.

III. Administrative Requirements

A. Public Hearing

A public hearing will be held, if requested, to discuss the proposed revisions to the standards in accordance with Section 307(d)(5) of the Clean Air Act. Persons wishing to make oral presentations on the proposed revisions should contact the EPA (see **ADDRESSES**). If a public hearing is requested and held, EPA will ask clarifying questions during the oral presentation but will not respond to the presentations or comments. To provide an opportunity for all who may wish to speak, oral presentations will be limited to 15 minutes each. Any member of the public may file a written statement on or before August 26, 1996. Written statements should be addressed to the Air and Radiation Docket and Information Center (see **ADDRESSES**) and refer to Docket No. A–95–46. Written statements and supporting information will be considered with equivalent weight as any oral statement and supporting information subsequently presented at a public hearing, if held. A verbatim transcript of the hearing and written statements will be placed in the docket and be available for public inspection and copying, or mailed upon request, at the Air and Radiation Docket and Information Center (see **ADDRESSES**).

B. Docket

The docket is an organized and complete file of all the information considered by the EPA in the development of this proposed rulemaking. The principal purposes of the docket are: (1) To allow interested parties to identify and locate documents so that they can effectively participate in the rulemaking process and (2) to serve as the official record in case of judicial review (except for interagency review materials (section 307(d)(7)(A) of the Act)).

C. Clean Air Act Procedural Requirements

1. Administrator Listing—Under Section 111 of the Act, establishment of standards of performance for nonmetallic mineral processing plants was preceded by the Administrator's determination (40 CFR 60.16, 44 FR 49222, dated August 21, 1979) that these sources contribute significantly to air pollution which may reasonably be anticipated to endanger public health or welfare.

2. External Participation—In accordance with section 117 of the Act, publication of the proposed revisions to the NSPS was preceded by consultation with a national trade association composed of 570 member companies and several States. The Administrator welcomes comments on today's proposed revisions to the NSPS.

3. Economic Impact Assessment—Section 317 of the Act requires the Administrator to prepare an economic impact assessment for any new source standard of performance promulgated under Section 111(b) of the Act. Today's proposed rulemaking is for clarifications and minor revisions to the applicability, definitions, test methods and procedures, and reporting and recordkeeping sections of the regulation. No additional controls or other costs are being incurred as a result of these revisions. The proposed revisions would result in a cost savings for the industry (reduction of certain testing and recordkeeping and reporting requirements) and the EPA and State/Local agencies (reduction in staff time needed to review fewer reports). Therefore, no economic impact assessment for the proposed revisions to the standards was conducted.

D. Office of Management and Budget Reviews

1. Paperwork Reduction Act

As required by the Paperwork Reduction Act (PRA), 44 U.S.C. 3501 *et seq.*, an ''information collection request'' (ICR) document has been prepared by the EPA (ICR No. _____) to reflect the revised/reduced information requirements of the proposed revised regulation and a copy may be obtained from Sandy Farmer, OPPE Regulatory Information Division (2136), U.S. Environmental Protection Agency, 401 M St., S.W., Washington, DC 20460, or by calling (202) 260–2740.

Under the existing NSPS, the industry recordkeeping and reporting burden and costs for an owner or operator of a new

nonmetallic mineral processing plant was estimated at 820 hours and $27,100 for the first year of operation. The vast majority of the estimated hours (670) were attributed to required Method 5 and Method 9 performance testing of affected facilities. Under the proposed revised NSPS, a 1-hour Method 9 test is allowed in lieu of the Method 5 test for individual, enclosed storage bins. In addition, the duration of Method 9 tests for most fugitive emission sources and individual, enclosed storage bin emission sources has been reduced from 3 hours to 1 hour. Also, plant owners or operators are allowed to submit one notification of actual startup for several affected facilities in a production line that begin operation the same day, in lieu of multiple notifications for each affected facility. The proposed revised NSPS is also waiving the General Provisions requirement to submit a notification of anticipated startup for each affected facility. Therefore, the revised annual estimated industry recordkeeping and reporting burden and costs for an owner or operator of a new nonmetallic mineral processing plant are 480 hours and $15,800, the majority of which is due to performance testing. This represents an estimated reduction in the average emission testing, recordkeeping and reporting burden of 340 hours and $11,300 for a new plant in the first year. This collection of information is estimated to have an average annual government recordkeeping and reporting burden of 320 hours over the first 3 years. Burden means the total time, effort, or financial resources expended by persons to generate, maintain, retain or disclose or provide information to or for a Federal agency. This includes the time needed to review instructions; develop, acquire, install, and utilize technology and systems for the purposes of collecting, validating, and verifying information, processing and maintaining information, and disclosing and providing information; adjust the existing ways to comply with any previously applicable instructions and requirements; train personnel to be able to respond to a collection of information; search data sources; complete and review the collection of information; and transmit or otherwise disclose the information.

An Agency may not conduct or sponsor, and a person is not required to respond to a collection of information unless it displays a currently valid OMB control number. The OMB control numbers for EPA's regulations are listed in 40 CFR part 9 and 48 CFR ch. 15.

Comments are requested on the reductions discussed in this preamble. Send comments on the ICR to the Director, OPPE Regulatory Information Division (2136), U.S. Environmental Protection Agency, 401 M St., SW., Washington, DC 20460. Include the ICR number in any correspondence. The final rule will respond to any public comments on the reduced information collection requirements contained in this proposal.

2. Executive Order 12866 Review

Under Executive Order 12866 [58 FR 51735 (October 4, 1993)], the EPA must determine whether the proposed regulatory action is ''significant'' and therefore subject to the Office of Management and Budget (OMB) review and the requirements of this Executive Order to prepare a regulatory impact analysis (RIA). The Order defines ''significant'' regulatory action as one that is likely to result in a rule that may:

(1) Have an annual effect on the economy of $100 million or more or adversely affect in a material way the economy, a sector of the economy, productivity, competition, jobs, the environment, public health or safety in State, local or tribal governments or communities;

(2) Create a serious inconsistency or otherwise interfere with an action taken or planned by another agency;

(3) Materially alter the budgetary impact of entitlements, grants, user fees or loan programs or the rights and obligations of recipients thereof; or

(4) Raise novel legal or policy issues arising out of legal mandates, the President's priorities, or the principles set forth in the Executive Order.

Pursuant to the terms of Executive Order 12866, it has been determined that the proposed revisions to the standards are ''not significant'' because none of the above criteria are triggered by the proposed revisions. The proposed revisions would decrease the cost of complying with the revised standards.

3. Unfunded Mandates Act of 1995

Title II of the Unfunded Mandates Reform Act of 1995 (UMRA), Pub. L. 104–4, establishes requirements for Federal agencies to assess the effects of their regulatory actions on State, local, and tribal governments and the private sector. Under Section 202 of the UMRA, the EPA generally must prepare a written statement including a cost-benefit analysis for proposed and final rules with ''Federal mandates'' that may result in expenditures to State, local, and tribal governments, in the aggregate, or to the private sector, of $100 million or more in any one year.

The EPA has determined that today's action, which proposes revisions and clarifications to the existing regulation, decreases the cost of compliance with this proposed revised regulation. Therefore, the requirements of the Unfunded Mandates Act do not apply to this proposed action.

E. Regulatory Flexibility Act Compliance

The Regulatory Flexibility Act (RFA) (5 U.S.C. 601 *et seq.*) requires Federal agencies to give special consideration to the impact of regulations on small entities, which are small businesses, small organizations, and small governments. The major purpose of the RFA is to keep paperwork and regulatory requirements from getting out of proportion to the scale of the entities being regulated, without compromising the objectives of, in this case, the Act.

If a regulation is likely to have a significant economic impact on a substantial number of small entities, the EPA may give special consideration to those small entities when analyzing regulatory alternatives and drafting the regulation. The impact of this regulation upon small businesses was analyzed as part of the economic impact analysis performed for the proposed standards for the nonmetallic minerals processing plants (48 FR 39566, August 31, 1983). As a result of this analysis, plants operating at small capacities were exempted from the requirements of the standards. Today's proposed revisions to the standards do not affect these exempted small plants; that is, they continue to be exempted from the standards. In addition, the main thrust of the proposed revisions to the standards is a reduction of the reporting and recordkeeping requirements for owners and operators of all affected facilities.

Pursuant to the provisions of 5 U.S.C. 605(b), I hereby certify that this proposed rule will not have a significant economic impact on a substantial number of small entities because the impact of the proposed rule is not significant.

List of Subjects in 40 CFR Part 60

Environmental protection, Air pollution control, Nonmetallic mineral processing plants, Reporting and recordkeeping requirements, Intergovernmental relations.

Dated: June 17, 1996.

Carol M. Browner,

Administrator.

For the reasons set out in the preamble, it is proposed to amend 40 CFR part 60, subpart OOO as follows:

PART 60—STANDARDS OF PERFORMANCE FOR NEW STATIONARY SOURCES

1. The authority citation for part 60 continues to read as follows:

Authority: 42 U.S.C. 7401, 7411, 7414, 7416, 7429 and 7601.

2. It is proposed to amend 60.670 by revising paragraphs (a) and (d)(2), and adding paragraph (f) to read as follows:

§ 60.670 Applicability and designation of affected facility.

(a) Except as provided in paragraphs (b), (c), and (d) of this section, the provisions of this subpart are applicable to the following affected facilities in fixed or portable nonmetallic mineral processing plants: each crusher, grinding mill, screening operation, bucket elevator, belt conveyor, bagging operation, storage bin, enclosed truck or railcar loading station. All facilities located in underground mines are exempted from the provisions of this subpart. Except as required in § 60.676(g), the provisions of this subpart do not apply to wet screening operations and associated conveyors downstream of the wet screening operation in the production line up to, but not including, the next crusher, grinding mill, or dry screening operation.

* * * * *

(d) * * *

(2) An owner or operator complying with this paragraph shall submit the information required in § 60.676(a).

* * * * *

(f) Table 1 of this subpart specifies the provisions of subpart A that apply and those that do not apply to owners and operators of affected facilities subject to this subpart.

2a. It is proposed to add Table 1 to Subpart OOO to read as follows:

TABLE 1.—APPLICABILITY OF SUBPART A TO SUBPART OOO

Subpart A reference	Applies to subpart OOO?	Comment
60.1 Applicability	Yes.	
60.2 Definitions	Yes.	
60.3 Units and abbreviations	Yes.	
60.4 Address—(a)	Yes.	
(b)	Yes.	
60.5 Deter. of construction or modification	Yes.	
60.6 Review of plans	Yes.	
60.7 Notification and recordkeeping	Yes	Except in (a)(2), report of anticipated date of initial startup is not required [60.676(g)].
60.8 Performance tests	Yes.	Except in (d), after 30 days notice for an initially scheduled perf. test, any rescheduled perf. test requires 7 days notice, not 30 days [60.675(g)].
60.9 Availability of information	Yes.	
60.10 State authority	Yes.	
60.11 Compliance with standards and maintenance requirements.	Yes	Except in (b), under certain conditions [sec. 60.675 (c)(4) and (c)(5)], Method 9 observation may be reduced from 3 hrs. to 1 hr.
60.12 Circumvention	Yes.	
60.13 Monitoring requirements	Yes.	
60.14 Modification	Yes.	
60.15 Reconstruction	Yes.	
60.16 Priority list	Yes.	
60.17 Incorporations by reference	Yes.	
60.18 General control device requirements	No	Flares will not be used to comply with the emission limits.
60.19 General notification and reporting requirements	Yes.	

3. It is proposed to amend § 60.671 by adding in alphabetical order the definition of *Wet screening operation* to read as follows:

§ 60.671 Definitions.

* * * * *

Wet screening operation means a screening facility designed and operated at all times to remove unwanted material from the product by a washing process whereby the product is completely saturated with water.

* * * * *

4. It is proposed to amend § 60.672 by removing the word ''or'' after paragraph (a)(1), by revising paragraphs (b) and (c), and by adding paragraphs (f) and (g) to read as follows:

§ 60.672 Standard for particulate matter.

(a) * * *

(1) Contain particulate matter in excess of 0.05 g/dscm.

(2) * * *

(b) On and after the sixtieth day after achieving the maximum production rate at which the affected facility will be operated, but not later than 180 days after initial startup as required under § 60.11, no owner or operator subject to the provisions of this subpart shall cause to be discharged into the atmosphere from any transfer point on belt conveyors or from any other affected facility any fugitive emissions which exhibit greater than 10 percent opacity, except as provided in paragraphs (c), (d), (e), (f), and (g) of this section.

(c) On and after the sixtieth day after achieving the maximum production rate at which the affected facility will be operated, but not later than 180 days after initial startup as required under § 60.11, no owner or operator shall cause to be discharged into the atmosphere from any crusher, at which a capture system is not used, fugitive emissions which exhibit greater than 15 percent opacity.

* * * * *

(f) On and after the sixtieth day after achieving the maximum production rate at which the affected facility will be operated, but not later than 180 days after initial startup as required under § 60.11, no owner or operator shall cause to be discharged into the atmosphere from any baghouse that only

controls emissions from an individual enclosed storage bin, stack emissions which exhibit greater than 7 percent opacity.

(g) Owners or operators of multiple storage bins with combined stack emissions shall comply with the emission limits in paragraph (a) of this section.

5. It is proposed to amend § 60.675 by revising paragraph (d) and adding paragraph (g) to read as follows:

§ 60.675 Test methods and procedures.

* * * * *

(d) When determining compliance with the fugitive emissions standard for any affected facility described under § 60.672(b) and where there are no individual readings greater than 10% opacity and where there are no more than 3 readings of 10% opacity for the first hour of testing of this affected facility and the opacity of stack emissions from any baghouse that only controls emissions from an individual, enclosed storage bin under § 60.672(f), using Method 9, the duration of the Method 9 observations shall be 1 hour (10 6-minute averages).

* * * * *

(g) If, after 30 days notice for an initially scheduled performance test, there is a delay (due to operational problems, etc.) in conducting any rescheduled performance test required in this section, the owner or operator of an affected facility shall submit to the Administrator at least 7 days prior notice of any rescheduled performance test.

6. Section 60.676 is amended by removing and reserving paragraph (b), revising paragraph (f), redesignating paragraph (g) as paragraph (j) and revising newly designated (j), and adding new paragraphs (g), (h), and (i) to read as follows:

§ 60.676 Reporting and recordkeeping.

* * * * *

(b) [reserved]

* * * * *

(f) The owner or operator of any affected facility shall submit written reports of the results of all performance tests conducted to demonstrate compliance with the standards set forth in § 60.672, including reports of opacity observations made using Method 9 to demonstrate compliance with § 60.672 (b), (c), and (f), and reports of observations using Method 22 to demonstrate compliance with § 60.672(e).

(g) The owner or operator of any wet screening operation and associated conveyor shall keep a record describing the location of these operations and shall submit an initial report describing the location of these operations within 30 days. If, subsequent to the initial report, any screening operation ceases to operate as wet screening, the owner or operator shall submit a report of this change and shall immediately comply with all of the requirements of the regulation for an affected facility. These reports shall be submitted within 30 days following such change.

(h) The Subpart A requirement under § 60.7(a)(2) for notification of the anticipated date of initial startup of an affected facility shall be waived for owners or operators of affected facilities regulated under this subpart.

(i) A notification of the actual date of initial startup of each affected facility shall be submitted to the Administrator. For a combination of affected facilities in a production line that begin actual initial startup on the same day, a single notification of startup may be submitted by the owner or operator to the Administrator. The notification shall be postmarked within 15 days after such date and shall include a description of each affected facility, equipment manufacturer, and serial number of the equipment, if available.

(j) The requirements of this section remain in force until and unless the Agency, in delegating enforcement authority to a State under section 111 of the Act, approves reporting requirements or an alternative means of compliance surveillance adopted by such States. In that event, affected facilities within the State will be relieved of the obligation to comply with the reporting requirements of this section, provided that they comply with requirements established by the State.

[FR Doc. 96–16012 Filed 6–26–96; 8:45 am]

BILLING CODE 6560–50–P

---

40 CFR Part 86

[AMS-FRL–5526–9]

Control of Emissions of Air Pollution from Highway Heavy-Duty Engines

AGENCY: Environmental Protection Agency (EPA).

ACTION: Notice of proposed rulemaking.

SUMMARY: In this action, EPA proposes new emission standards and related provisions for heavy-duty engines intended for highway operation, beginning in the 2004 model year. The proposed provisions represent a large reduction (approximately 50 percent) in emission of oxides of nitrogen (NO_X), as well as reductions in hydrocarbons (HC) and nitrate particulate matter (PM) from trucks and buses. If the proposed standards are implemented, the resulting emission reductions would translate into significant, long-term improvements in air quality in many areas of the U.S. This would provide much-needed assistance to a range of states and regions facing ozone and particulate air quality problems that are causing a range of adverse health effects for their citizens, especially in terms of respiratory impairment and related illnesses.

EPA is also proposing several provisions to increase the durability of emission controls and to provide flexibility for manufacturers in complying with the stringent new standards. The Agency previously published an Advance Notice of Proposed Rulemaking relating to this action and addresses here a number of the comments received on the Advance Notice. EPA believes the proposed program would result in significant progress throughout the country in protecting public health and the environment.

DATES: EPA requests comment on the proposal rulemaking no later than August 26, 1996.

EPA will hold a public hearing on this proposal on July 25, 1996.

EPA will also hold a public meeting on July 19, 1996, to discuss the proposed HDE regulations and receive informal public input on them, and to discuss other potential mobile source controls identified in the California Ozone State Implementation Plan for the South Coast (the greater Los Angeles area).

More information about commenting on this action and on the public hearing and meeting may be found under Public Participation, in Section II of **SUPPLEMENARY INFORMATION**.

ADDRESSES: Materials relevant to this proposal including the draft regulatory text and Regulatory Impact Analysis (RIA) are contained in Public Docket A–95–27, located at room M–1500, Waterside Mall (ground floor), U.S. Environmental Protection Agency, 401 M Street, S.W., Washington, DC 20460. The docket may be inspected from 8:00 a.m. until 5:30 p.m., Monday through Friday. A reasonable fee may be charged by EPA for copying docket materials.

Comments on this proposal should be sent to Public Docket A–95–27 at the above address. EPA requests that a copy of comments also be sent to Chris Lieske, U.S. EPA, Engine Programs and Compliance Division, 2565 Plymouth Road, Ann Arbor, MI 48105.

The hearing on this proposal will be held at the Marriott Hotel and

Conference Center, 1275 South Huron Street, Ypsilanti, MI, (313) 487–2000, from 9:00 am until all testimony has been presented.

The public meeting to discuss the proposed HDE regulations will be held Downtown Los Angeles Hyatt Regency, 711 South Hope Street, Los Angeles, California. The public meeting will be conducted in two sessions beginning at 2:00 p.m. and 7:00 p.m., with a dinner recess before the 7:00 p.m. sessions.

This proposal, the draft regulatory text, and the draft Regulatory Impact Analysis (RIA) are available electronically and can be obtained on the Technology Transfer Network (TTN), which is an electronic bulletin board system (BBS) operated by EPA's Office of Air Quality Planning and Standards and via the internet. Details on how to access TTNBBS and the internet are included in Section XIII of **SUPPLEMENTARY INFORMATION**.

FOR FURTHER INFORMATION CONTACT: Chris Lieske, U.S. EPA, Engine Programs and Compliance Division, (313) 668–4584.

SUPPLEMENTARY INFORMATION:

I. Introduction

Air pollution continues to represent a serious threat to the health and well-being of millions of Americans and a large burden to the U.S. economy. This threat exists despite the fact that, over the past two decades, great progress has been made at the local, state and national levels in controlling emissions from many sources of air pollution. As a result of this progress, many individual emission sources, both stationary and mobile, pollute at only a fraction of their precontrol rates. However, continued industrial growth and expansion of motor vehicle usage threaten to reverse these past achievements. Today, more than five years after passage of major amendments to the Clean Air Act (CAA or the Act), many states are still finding it difficult to meet the ozone and PM National Ambient Air Quality Standards (NAAQSs) by the deadlines established in the Act.[1] Furthermore, other states which are approaching or have reached attainment of the ozone and PM NAAQSs will likely see those gains lost if current trends persist.

In recent years, significant efforts have been made on both a national and state level to reduce air quality problems associated with ground-level ozone, with a focus on its main precursors, oxides of nitrogen (NO_X) and volatile organic compounds (VOCs).[2] In addition, airborne particulate matter (PM) has been a major air quality concern in many regions. As discussed below, NO_X, ozone, and PM have all been linked to a range of serious respiratory health problems and a variety of adverse environmental effects.

NO_X control is now seen as a critical strategy to control ozone levels, which remain unacceptably high in many areas across the country. For many years, control of VOCs was the main strategy employed in efforts to reduce ground-level ozone. VOC reductions were deemed more cost effective (on a per-ton basis) and more readily achievable than NO_X reductions. In addition, it was generally believed that greater ozone benefits could be achieved through VOC reductions. More recently, it has become clear that NO_X controls are often an effective strategy for reducing ozone where its levels are high over a large region (as in the Midwest and Northeast). As a result, attention has turned to controlling NO_X emissions as a key to improving air quality in many areas of the country.

Current projections show total NO_X emissions decreasing slightly during the next few years as stationary and mobile source control programs promulgated under the 1990 CAA amendments are phased in. However, the downward trends in NO_X pollution will begin to reverse and NO_X emission inventories will begin to rise by the early or middle part of the next decade due to growth in stationary and mobile source activity. In this timeframe, emissions from mobile sources will account for about half of all NO_X emissions and heavy-duty vehicles are projected to represent about one quarter of mobile source NO_X emissions. In most areas, a significant increase in ground-level ozone is expected to accompany the rise in NO_X emissions. Levels of PM are also expected to rise, both because of the expected increase in numbers of PM sources and because NO_X is transformed in the atmosphere into fine nitrate particles that account for a substantial fraction of the airborne particulate in some areas of the country (a process called ''secondary particulate formation''). Given these expected trends and the absence of new emission control initiatives, the Agency believes that some of the nation's hard-won air quality improvements will begin to be seriously threatened early in the next decade.

Over the past decade, ambient air measurements and computer modeling studies have repeatedly demonstrated that ozone is a regional-scale issue, not just a local issue, in part because ozone and its precursors, NO_X and VOC, are often transported across large distances. Thus, there is a role for all levels of government to address these issues. EPA's state and local partners generally agree that only with new initiatives at the regional and national level can long-term clean air goals be achieved.

The states have jurisdiction to implement a variety of stationary source emission controls. In most regions of the country, states are implementing significant stationary source NO_X controls (as well as stationary source VOC controls) for controlling acid rain, ozone, or both. In many areas, however, these controls will not be sufficient to reach and maintain the ozone standard without significant additional NO_X reductions from mobile sources. Generally, the Clean Air Act specifies that standards for controlling NO_X, HC, and PM emissions from new motor vehicles must be established at the federal level.[3] Thus, the states look to the national mobile source emission control program as a complement to their efforts to meet air quality goals. The concept of common emission standards for mobile sources across the nation is strongly supported by manufacturers, which often face serious production inefficiencies when different requirements apply to engines or vehicles sold in different states or areas.

Motor vehicle emission control programs have a history of technological success that, in the past, has largely offset the pressure from constantly growing numbers of vehicles and miles traveled in the U.S. The per-vehicle rate of emissions from new passenger cars and light trucks has been reduced to very low levels. As a result, increasing attention is now focused on heavy-duty trucks (ranging from large pickups to tractor-trailers), buses, and nonroad equipment.

Since the 1970s, manufacturers of heavy-duty engines for highway use have developed new technological approaches in response to periodic increases in the stringency of emission standards.[4] However, the technological characteristics of heavy-duty engines, particularly diesel engines, have so far prevented achievement of emission levels comparable to today's light-duty

[1] See 42 U.S.C. 7401 *et seq.*

[2] VOCs consist mostly of hydrocarbons (HC).

[3] The CAA limits the role states may play in regulating emissions from new motor vehicles. California is permitted to establish emission control standards for new motor vehicles, and other states may adopt California's programs (Sections 209 and 177 of the Act).

[4] Highway heavy-duty engines, sometimes referred to as highway HDEs in this proposal, are used in heavy-duty vehicles, which EPA defines as highway vehicles with a gross vehicle weight rating over 8,500 pounds.

gasoline vehicles. While diesel engines provide advantages in terms of fuel efficiency, reliability, and durability, controlling NO_X emissions is a greater challenge for diesel engines than for gasoline engines. Similarly, control of PM emissions, which are very low for gasoline engines, represents a substantial challenge for diesel engines. Part of this challenge is that most traditional NO_X control approaches tend to increase PM, and vice versa.

Despite these technological challenges, there is substantial evidence of the ability for heavy-duty highway engines to achieve significant additional emission reductions. In their successful efforts to reach lower NO_X and PM levels over the past 20 years, heavy-duty highway diesel engine manufacturers have identified new technologies and approaches that offer promise for significant new reductions. New technological options are available to manufacturers of heavy-duty gasoline engines as well. The emerging technological potential for much cleaner heavy-duty vehicles is discussed further in Section IV of this proposal and in the associated Regulatory Impact Analysis (RIA).

Recognizing the need for additional NO_X and PM control measures to address air quality concerns in several parts of the country and the growing contribution of the heavy-duty engine sector to ozone and PM problems, EPA issued an Advance Notice of Proposed Rulemaking (ANPRM) on August 31, 1995. In the ANPRM, the Agency sought early comment on the general framework of a program to reduce emissions from the heavy-duty engine category. The Agency has been pleased that a broad range of interested parties have responded to the ANPRM with their comments. To the extent possible, EPA has considered and addressed these comments in the preparation of this Notice of Proposed Rulemaking (NPRM). EPA continues to encourage comment on all aspects of the proposed program; where ANPRM commenters may believe that this action fails to address their comments, EPA encourages them to resubmit those comments in the context of this formal proposal.

This preamble is organized as follows: Section II.A. summarizes the public health and environmental concerns from ozone, PM and their precursors; Section II.B. discusses the connection of these emissions to air quality trends and the regional nature of the ozone and PM problems; Section II.C. presents trends in overall nationwide NO_X, VOC, and PM emissions; Section II.D. presents the current and projected future contribution of heavy-duty vehicles to overall emissions; Section II.E. summarizes the overall rationale for the action being proposed; Section III. then describes in detail the standards and other provisions being proposed as well as background on the regulation of highway heavy-duty engines; Section IV. summarizes the technological feasibility of the proposed program; Section V. reviews the results of EPA's economic and environmental analyses; Section VI. discusses the potential role of several incentive-based programs; and Section VII. provides information about the formal public comment process, including a public hearing. The actual proposed regulatory language is available in the public docket and electronically (see **ADDRESSES** above and Section XIII. for further information).

II. Need for New NO_X and VOC Emission Control

A. Health and Environmental Impacts of Ambient NO_X and VOC: Ozone, Particulate Matter, and Other Effects

Oxides of nitrogen (NO_X) comprise a family of highly reactive gaseous compounds that contribute to air pollution in both urban and rural environments. NO_X emissions are produced during the combustion of fuels at high temperatures. The primary sources of atmospheric NO_X include both stationary sources (such as power plants and industrial boilers), highway sources (such as light-duty and heavy-duty vehicles) and nonroad sources (such as construction and agricultural equipment). Ambient levels of NO_X can be directly harmful to human health and the environment. More importantly from an overall health and welfare perspective, NO_X contributes to the production of secondary chemical products that in turn cause additional health and welfare effects. Prominent among these are ozone and secondary PM formation. Each of these phenomena is briefly discussed in this proposal and in more detail in the Regulatory Impact Analysis.

Much of the evaluation of the health and environmental effects related to NO_X found in this section and in the Regulatory Impact Analysis (RIA) were also discussed in the August 31, 1995 ANPRM.[5] EPA encourages comment on the Agency beliefs expressed in this proposal and in the RIA.

1. Direct Health Effects of NO_X

The component of NO_X that is of most concern from a health standpoint is nitrogen dioxide, NO_2. EPA has set a primary (health-related) NAAQS for NO_2 of 100 micrograms per cubic meter, or 0.053 parts per million. Direct exposure to NO_2 can reduce breathing efficiency and increase lung and airway irritation in healthy people, as well as in the elderly and in people with pre-existing pulmonary conditions. Exposure to NO_2 at or near the level of the ambient standard appears to increase symptoms of respiratory illness, lung congestion, wheeze, and increased bronchitis in children.[6]

2. Indirect Health and Welfare Effects of NO_X and VOC

In addition to the direct effects of NO_X, the chemical transformation products of NO_X also contribute to adverse health and environmental impacts. These secondary impacts of NO_X include ground-level ozone, nitrate particulate matter, acid deposition, eutrophication (plant overgrowth) of coastal waters, and transformation of other pollutants into more dangerous chemical forms. Each of these is discussed below and in the Regulatory Impact Analysis. Also, volatile organic compounds (VOCs), composed of a very large number of different hydrocarbons (HC) and other organic compounds, are primary precursors to ozone. The health and environmental effects of these compounds as a class are generally considered in terms of their effect on ozone and are discussed below and in the RIA. Health or other effects of individual toxic compounds are not separately addressed in this proposal.

a. Ozone

NO_X and VOCs are primary precursors to ground level ozone (O_3). As discussed later in this proposal, ozone tends to be a regional phenomenon in which elevated levels of ozone can develop over wide areas.

Ozone is a highly reactive chemical compound that can affect both biological tissues and man-made materials. Ozone exposure causes a range of human pulmonary and respiratory health effects. While ozone's effects on the pulmonary function of sensitive individuals or populations (e.g., asthmatics) are of primary concern, evidence indicates that high ambient levels of ozone can cause respiratory symptoms in healthy adults and

[5] Information cited in this section and other related information on health and environmental effects related to NO_X and VOC are available from the Regulatory Impact Analysis and other documents found in Docket A–95–27.

[6] Air Quality Criteria Document for Oxides of Nitrogen, EPA–600/8–91/049aF–cF, August 1993 (NTIS #: PB92–17–6361/REB, –6379/REB, –6387/REB).

children as well. For example, exposure to ozone for several hours at moderate concentrations, especially during outdoor work and exercise, has been found to decrease lung function, increase airway inflammation, increase sensitivity to other irritants, and impair lung defenses against infections in otherwise healthy adults and children. Other symptoms include chest pain, coughing, and shortness of breath.[7]

Recent studies focusing on chronic lung effects are also being evaluated as part of EPA's review of the current ozone NAAQS. Repeated exposures in laboratory animals suggest a cumulative impact, potentially causing permanent structural changes to respiratory tissues.[8] Extrapolation of these results to humans raises concern that individuals who have been exposed to ambient air containing high levels of ozone each summer of their lives may experience a reduced quality of life in their later years.[9]

As described in more detail in the RIA, the presence of elevated levels of ozone is of concern in rural areas as well. Because of its high chemical reactivity, ozone causes injury to vegetation. This injury has been observed at ozone levels above and also below the current ozone NAAQS; EPA in is the process of reconsidering the appropriate level of the ozone NAAQS in light of such evidence. Although the action proposed is not being proposed for the purpose of reducing crop damage from ozone, it is of interest to note that estimates based on experimental studies of the major commercial crops in the U.S. suggest that ozone may be responsible for significant agricultural crop yield losses. In addition, ozone causes noticeable leaf injury in many crops, which reduces their marketability and value. Finally, there is evidence that exposure to ambient levels of ozone existing in many parts of the country may be responsible for forest and ecosystem damage. Such damage may be exhibited as leaf damage, reduced growth rate, and increased susceptibility to insects, disease, and other environmental stresses.

b. Nitrate Particulate Matter

The conversion of NO_X into fine particulate matter (such as ammonium nitrate) is of significant human health and environmental concern. In general, air pollutants collectively called particulate matter (PM) are divided into primary and secondary sources. Primary sources include dust, dirt, soot, smoke, and liquid droplets directly emitted into the air by sources such as factories, power plants, cars, trucks, woodstoves/fireplaces, construction activity, forest fires, agricultural activities such as tillage, and natural windblown dust. Particles formed secondarily in the atmosphere by condensation or the transformation of emitted gases such as SO_2, NO_X, and VOCs are also considered particulate matter. Ambient PM is related to several adverse health and environmental effects.

At the present time, data is not available to precisely partition PM–10 into its primary and secondary PM components. Most of the well developed nationwide PM–10 inventories are based only on primary sources, but inventories for some PM–10 nonattainment areas have identified the primary and secondary PM. From the available data, it is clear that the roles of primary and secondary PM vary geographically. For example, ammonium nitrate is a significant portion of the PM–10 inventory in cities in the western states (e.g., Denver, Salt Lake City, Los Angeles) and a smaller portion of total PM in cities in the eastern states (e.g., Philadelphia, New York). As discussed in the RIA, EPA estimates that the NO_X to Nitrate conversion rate varies from near zero to about 20 percent, with a U.S. average in the order of about 5 percent. While there is not data available on this at the present time, it is reasonable to assume that NO_X emissions from heavy-duty engines are converted to nitrate at the same rate as NO_X from other sources.

The existing NAAQS for particulate matter were set in 1987. The primary standards, intended to protect human health, are an average concentration of 150 micrograms per cubic meter ($\mu g/m^3$) over a 24-hour period and an average concentration of 50 $\mu g/m^3$ annually. PM–10 was selected as the indicator for particle pollution based on lung deposition studies. PM–10 includes all particles in the size range of 10 micrometers or less. Particles smaller than 2.5 micrometers are capable of penetrating deeper into the lungs and air sacs. The secondary standards, intended to protect against damage to the environment, were set identical to the primary standards.

Since the last review of the PM–10 NAAQS in 1987, many epidemiological studies of PM–10 exposure at levels below the existing 24-hour and annual standards have associated higher levels of particle pollution with increased occurrence of illness and death (e.g., increased hospital admissions, aggravation of bronchitis and asthma, and premature deaths). Based on studies of human populations exposed to high concentrations of particles and on laboratory studies of animals and humans, there are major human health concerns associated with PM. These include deleterious effects on breathing and the respiratory system, aggravation of existing respiratory and cardiovascular disease, alterations in the body's defense mechanisms against foreign materials, direct and indirect damage to lung tissue resulting in fibrosis, carcinogenesis, and premature death. The major subgroups of the population that appear to be most sensitive to the effects of particulate matter include individuals with emphysema-like conditions or cardiovascular diseases, chronic obstructive pulmonary disease, those with influenza, asthmatics, the elderly, and children. PM–10 also soils and damages materials, and fine particles are a major cause of visibility impairment in the United States.[10]

All particles in the atmosphere scatter light and, hence, reduce visibility. However, light is scattered most efficiently by particles with a diameter of 0.5–1.0 micrometers. Secondary particles such as nitrates are in this size range. As discussed in the RIA, in locations such as the western U.S., where the ambient levels of SO_2 tend to be low, EPA believes nitrate particles are major contributors to visibility attenuation.

c. Other Secondary Effects of NO_X

NO_X is a major contributor to acid deposition. The damage caused by acid deposition continues to be documented and includes acidification of surface waters and soil, reduction in fish populations, damage to forests and associated wildlife, soil degradation, damage to materials, monuments, buildings, etc., and reduced visibility.[11]

[7] Air Quality Criteria Document for Ozone and Related Photochemical Oxidants (External Review Draft), EPA/600/P–93/004aF-cF, 1996.

[8] Gross, K.B., White, H.J. (1987) ''Functional and pathologic consequences of a 52-week exposure to 0.5 PPM ozone followed by a clean air recovery period,'' Lung 165:283–295.; Huang, Y, Chang, L.-Y, Miller, F.J., Crapo, J.D. (1988) ''Lung injury caused by ambient levels of ozone,'' J. Aerosol Med. 1:180–183; Tyler, W.S., Tyler, N.K., Last, J.A., Gillespie, M.J., Barstow, T.J. (1988) ''Comparison of daily and seasonal exposures of young monkeys to ozone,'' Toxicology 50:131–144.

[9] See, for example, Euler, G.L.; Abbey, D.E.; Hodgkin, J.E.; Magie, A.R. (1988) ''COPD symptom effects of long-term cumulative exposure to ambient levels of total oxidants and nitrogen dioxide in California Seventh-Day Adventist residents,'' Arch. Environ. Health 43:279–285.

[10] Air Quality Criteria for Particulate Matter (External Review Draft), EPA–600/AP–95/001a–a, April 1995.

Effects of acid deposition are most pronounced during springtime snowmelts, when ''pulses'' of highly acidic water, often containing high concentrations of toxic aluminum, enter lakes and streams. In addition, nitrogen compounds deposited on ecosystems can transport acids already contained in the soils and thus contribute to the acidification of those ecosystems. Although one commenter on the ANPRM, API, challenged the importance of NO_X control in reducing acid deposition, EPA believes that geographically broad controls like those proposed in this action represent a cost-effective method of reducing overall levels of deposited acid.[12]

Another secondary effect of NO_X emissions is their role in the overgrowth of algae and other plants and oxygen depletion (eutrophication) in coastal estuaries in the eastern part of the country, including the Chesapeake Bay, as well as other estuaries and coastal waters.[13] Airborne nitrogen compounds act as fertilizers for plant growth, contributing an estimated 25 percent of nitrogen loading in some coastal waters. In waters where nitrogen compounds are the limiting factor, eutrophication is resulting in the reduction or loss of commercially valuable aquatic/marine species as well as diminution of water-related recreational activities. EPA addressed this effect on estuaries in the ANPRM and received no comments counter to the Agency's assessment; comment on this issue is encouraged.

EPA encourages comment on all aspects of its review of the human health and environmental impacts of ozone, NO_X, and PM (especially secondary nitrate PM), both in this preamble and in the Regulatory Impact Analysis.

B. Need for NO_X and VOC Control To Address Ozone and PM Issues

1. Regional NO_X Control as a Strategy for Addressing Regional Ozone Problems

The precursors to ozone and ozone itself are transported long distances under some commonly occurring meteorological conditions. Specifically, concentrations of ozone and its precursors in a region and the transport of ozone and precursor pollutants into, out of, and within a region are very significant factors in the accumulation of ozone in any given area. Regional-scale transport, as it is discussed in this proposal, may occur within a state or across one or more state boundaries. Local source NO_X and VOC controls are key parts of the overall attainment strategy for nonattainment areas. However, the ability of an area to achieve ozone attainment and thereby reduce ozone-related health and environmental effects is often heavily influenced by the ozone and precursor emission levels of upwind areas. Thus, for many of these areas, EPA believes that attainment of the ozone NAAQS will require control programs much broader than strictly locally focused controls to take into account the effect of emissions and ozone far beyond the boundaries of any individual nonattainment area.

EPA therefore believes that effective ozone control requires an integrated strategy that combines cost-effective reductions in emissions from both mobile and stationary sources. EPA's current initiatives, including the national highway heavy-duty engine standards proposed in this action, are components of the Agency's integrated ozone reduction strategy.

By the time the 1990 amendments to the Clean Air Act were passed, the understanding that many areas face regional-scale ozone problems was well established. Before 1990, the Act required states to address the contribution of their pollution to other areas' attainment of the ozone standard. Then, in the 1990 amendments, Congress included additional provisions for states to address regional ozone transport in their efforts to reach attainment by the statutory deadlines (the Northeast Ozone Transport Region and Commission resulted from these provisions). Since 1990, the understanding of regional transport of ozone precursors and ozone itself has continued to expand.

The problem of regional transport of ozone and its precursors is widely recognized by the states. In response to concerns about this problem raised by state environmental commissioners comprising the Environmental Council of the States (ECOS), EPA has worked closely with states in the Ozone Transport Assessment Group (OTAG) to develop various recommended control measures intended to address the regional nature of ozone. Similarly, state and local air administrators, under the auspices of STAPPA and ALAPCO, recently passed a unanimous resolution endorsing national NO_X emission regulations.[14]

As the understanding of the photochemical phenomena related to ozone has developed, NO_X control options have received increasing attention. Especially in addressing regional-scale ozone problems, control of NO_X has emerged as the primary strategy. VOC control, by comparison, is seen as most effective in addressing localized ozone peak concentrations found in or near major urban areas. As discussed further below, EPA has conducted modeling studies in recent years covering the eastern half of the U.S., which have reinforced the understanding that regional-scale control of NO_X emissions will be essential to reducing the levels of transported ozone in large areas of the Northeast, Southeast, and Midwest. EPA believes that ozone problems in California also represent regional problems that would be susceptible to regional NO_X control. Thus, the extent of local controls that will be needed to attain and maintain the ozone NAAQS in and near seriously polluted cities is sensitive both to the amount of ozone and precursors transported into the local area and to the specific photochemistry of the area. In some cases (e.g., portions of the Northeast Corridor, the Lake Michigan area, Atlanta, and California) preliminary local modeling performed by the states indicates that it will likely not be feasible to find sufficient local control measures for individual nonattainment areas unless transport into the areas is reduced in some manner. EPA has carefully considered this important relationship between local and regional NO_X controls for individual areas and regions and for the country as a whole, as summarized in the next sections. EPA requests comment on these issues as well as general comments on the need for regional-scale NO_X controls.

a. Action by States and EPA To Achieve CAA Air Quality Goals

Title I of the 1990 Clean Air Act amendments (Sections 181–185(b), generally) established an aggressive strategy for ozone nonattainment areas to come into compliance with the ozone NAAQS. (The case of attainment of the PM NAAQS is discussed in section B.3. below.) The Act's strategy provides the framework for action by states and EPA for national, regional, and local controls. Under these provisions, states are expected to submit State Implementation Plans (SIPs)

[11] ''Acid Deposition Standard Feasibility Study, A Report to Congress,'' prepared for the U.S. Environmental Protection Agency by the Cadmus Group, Inc., under Contract Number 68–D2–0168, February 1995.

[12] More information about EPA's position on the relationship between NO_X and acid deposition may be found as item II–A–13 in Docket A–95–28, titled *Draft Report: Adverse Effects of Nitrogen Oxides and Benefits of Reductions.*

[13] Deposition of Air Pollutants Into the Great Waters: First Report to Congress, EPA–453/r–93–055, May 1994.

[14] See comments from STAPPA/ALAPCO in Docket A–95–27.

demonstrating how each nonattainment area will reach attainment of the ozone NAAQS. Based on the degree that ozone concentrations in an area exceed the standard, the Act spells out specific requirements that states must incorporate into their attainment plans and sets specific dates by which nonattainment areas must reach attainment.

For nonattainment areas designated as serious, severe, or extreme, state attainment demonstrations involve the use of photochemical grid modeling (e.g., Urban Airshed Modeling, or UAM) for each nonattainment area. Although these attainment demonstrations were due November 15, 1994, the magnitude of this modeling task, especially for areas that are significantly affected by transport of ozone and precursors generated outside of the nonattainment area, has delayed many states in submitting complete modeling results.

Recognizing these challenges, EPA recently issued guidance on ozone demonstrations, based on a two-phase approach for the submittal of ozone SIP attainment demonstrations.[15] Under Phase I, the state is required to conduct limited UAM modeling and submit a plan implementing a set of specific local control measures to achieve major reductions in ozone precursors. Phase II involves a two-year process during which EPA, the states, regional associations, and other interested parties can improve emission inventories and modeling and identify regional measures that may be needed to supplement the local controls of Phase I. These improved analyses are then to be considered by states in identifying additional local control measures that may be needed to attain the NAAQS by the statutory dates. Currently, under Phase I of the process, states are submitting plans and EPA is taking action to approve or disapprove them.

As part of these Phase I submittals, some states have indicated that on the basis of preliminary information, locally based stationary source NO_X controls in those nonattainment areas would not be helpful—or, in a few cases, would be detrimental—to attainment of the ozone NAAQS. These states have petitioned EPA under Section 182(f) of the Act for exemptions from local NO_X stationary source controls they would otherwise be required to implement under Reasonably Available Control Technology (RACT) and New Source Review (NSR) regulations. In general, Section 182(f) provides that waivers must be granted if states show that reducing NO_X within a nonattainment area would not contribute to attainment of the ozone NAAQS within the same nonattainment area.[16] This section of the Act was added in 1990 in recognition of the fact that NO_X reductions within some nonattainment areas can increase ozone concentrations.

Section 182(f) of the Act also requires EPA to limit the assessment of state petitions to the effect that NO_X reductions within a nonattainment area are likely to have on that local area's ability to meet the NAAQS (i.e., this section of the Act does not permit an assessment of pollutant transport into and out of the area). However, in their modeling supporting their overall attainment demonstrations under Phase II, states will need to project the levels of ozone and precursors that are transported into the area (these assumptions are called ''boundary conditions''). In many areas, the boundary conditions used in Phase II modeling will need to assume that significant reductions in ozone and NO_X will be accomplished upwind. Thus, in Phase II of the current process, it will be necessary for states and EPA to consider the impacts of NO_X controls at both the local and regional levels in assessing how attainment can be achieved. As described below, in most cases, EPA believes that broad, regional ozone and NO_X control in upwind areas will be necessary for Phase II demonstrations even where Phase I modeling results currently indicate that local NO_X controls may be unnecessary or detrimental.

b. Local NO_X Exemptions' Relation to Regional NO_X Control Needs

The state petitions for exemption from local RACT and NSR requirements so far granted by EPA fall into three categories: (1) EPA approved four state petitions for areas (Dallas and El Paso, TX, Birmingham, AL, and northern Maine) for which Phase I modeling shows that the areas will attain the ozone NAAQS without additional NO_X controls (there is no analysis for these areas showing NO_X controls are either beneficial or detrimental); (2) EPA granted exemptions for five areas (Baton Rouge, LA, Beaumont, TX, Houston, TX, the Lake Michigan area, and Phoenix, AZ) after Phase I modeling showed that local NO_X controls could worsen peak ozone concentrations in the nonattainment areas; (3) EPA approved ten other petitions based on monitoring data that shows the areas attained the ozone NAAQS without additional NO_X controls (there is no analysis for these areas showing NO_X controls are either beneficial or detrimental). It is important to note that only five exemptions that have been granted assert that NO_X controls would be detrimental to attainment plans.

It is very important to view EPA's granting of exemptions from local NO_X controls in some areas under Phase I of the attainment process in the broader context of the ultimate Phase II determinations. Although EPA believes that it is reasonable to initiate new control programs to address regional ozone problems on the strength of information already available (see Section II.E. below), a better overall picture of regional and local air quality phenomena for each area will exist once Phase II demonstrations are completed. Some commenters on the ANPRM have argued that EPA's granting of local NO_X exemptions for some areas during Phase I of the process should be interpreted as a conclusion by the Agency that no further NO_X controls—local, regional, or national—will be necessary for these areas to reach and maintain attainment or that such controls would be harmful. API commented that EPA ''has failed to reconcile [the] two incongruous policies,'' referring to the initiation of new regionally based controls in a period when local NO_X exemptions are being granted in some areas. Similarly, the National Petroleum Refiners Association (NPRA) stated that they view such simultaneous action to be ''contradictory and arbitrary.'' For several reasons, EPA believes that such characterizations fail to recognize the limited role of local NO_X exemptions within the broader Phase II attainment demonstration process.

First, because most of the NO_X waiver petitions contain no modeling analyses and many of those that contain modeling analyses are being supplemented with improved Phase II modeling, EPA's approval of each NO_X exemption has been granted on a contingent basis.[17] That is, a monitoring-based exemption lasts for only as long as the area's monitoring data continue to demonstrate attainment. Thus, if a violation is monitored (prior to the area being redesignated as being in attainment) the exemption would be revoked and the

[15] Memorandum from Mary D. Nichols, Assistant Administrator for Air and Radiation, to EPA Regional Administrators, re Ozone Attainment Demonstrations, March 2, 1995.

[16] ''Section 182(f) Nitrogen Oxides (NO_X) Exemptions—Revised Process and Criteria,'' EPA Memo from John S. Seitz, Director, OAQPS, to Regional Air Directors, February 8, 1995.

[17] ''Section 182(f) Nitrogen Oxides (NO_X) Exemptions—Revised Process and Criteria,'' EPA Memo from John S. Seitz, Director, OAQPS, to Regional Air Directors, May 27, 1994.

requirement to adopt NO_X controls would again apply. Similarly, any modeling-based exemption may need to be withdrawn if updated modeling analyses for Phase II reach a different conclusion than the Phase I modeling on which the exemption was based.[18]

Second, as discussed above, Section 182(f) of the Act does not permit EPA to consider regional-scale NO_X issues when acting on state petitions for exemptions from local NO_X controls. Because NO_X has been shown to be effective in reducing regionally transported ozone, the broader modeling under Phase II is expected to show that many areas will need regional NO_X controls to counter expected growth and maintain or reach attainment. Where this occurs, it might also lead to withdrawal of exemptions from local NO_X controls.

Third, EPA has separate authority under the CAA (Section 110(a)(2)(D)) to require a state to reduce emissions from sources where there is evidence showing that transport of such emissions would contribute significantly to nonattainment or interfere with maintenance of attainment in other states. For example, local NO_X controls may need to be reinstated if Phase II modeling shows that additional reductions in that area are needed for attainment and maintenance in downwind areas, superseding any NO_X exemption that may have been granted under Phase I. If this need arises, Section 110(a)(2)(D) would provide EPA the authority to require such additional reductions.

EPA therefore believes that decisions about initiating new NO_X control programs that have a regional-scale effect are appropriately made based on the best understanding available at that time of the broad attainment needs of all areas. As is discussed below for several regions of the country, there is strong evidence that regional-scale controls will be needed to achieve and maintain attainment. As a part of the Phase II assessments, the impact of and need for NO_X control and the continuation or withdrawal of local NO_X exemptions would be taken fully into account. Thus, in assessing EPA's overall NO_X policy, it is important to understand the limited and perhaps temporary nature of exemptions from NO_X controls in some areas within the context of the anticipated implementation of broader, regional NO_X control strategies upon completion of the Phase II modeling.

An important issue that states and EPA will consider during the Phase II process is the interaction between prospective regional control programs and local air quality conditions. For nonattainment areas that are granted local NO_X exemptions based on the lack of need for additional NO_X controls (this covers the great majority of current and pending exemptions, as shown above), introducing regional controls that have an effect both inside and outside the nonattainment area is generally not expected to harm air quality within the area. In the few areas where Phase I modeling indicates that reduction of NO_X in the area could increase ozone in some locations, a balancing of all relevant factors will be necessary if Phase II modeling reinforces that a significant potential problem exists. For example, if ozone and NO_X transported into the area would be significantly reduced by regional-scale controls, the absolute level of ozone within the area would drop, changing the photochemistry of the area and potentially offsetting any localized detriment to air quality that might still be introduced by the regional controls (e.g., cleaner trucks within the area).

In its comments on the ANPRM, API referred to recent modeling studies performed by the Modeling Ozone Cooperative, which API says challenge EPA's earlier conclusions about the need for NO_X control in the Northeast. EPA is aware of and is reviewing the results of these modeling studies. Based on EPA's evaluation of these studies to date, the Agency finds that these studies in fact support EPA's previous conclusions that broad regional-scale controls will be necessary for the Northeast and other areas to attain and maintain the ozone NAAQS. As API observes, these studies also predict that NO_X reductions may increase ozone levels in several areas. API also cites modeling performed by the Lake Michigan Air Directors Consortium (LADCO), which appears to predict similar results for the Lake Michigan area. As described below, the LADCO studies do however, suggest that reductions in regional ozone at the boundary of their modeling domain will likely play a key role in determining whether the NAAQS can be attained with local VOC-oriented control measures.

EPA is concerned about these results and is interested in additional modeling to further explore the degree to which NO_X control programs may increase ozone in some areas. Questions not answered by current modeling include (1) how the results change if additional stationary and mobile source NO_X and VOC control programs are assumed to be implemented by the time the heavy-duty engine emission standards proposed in this action would be in place and (2) whether urban-scale modeling of higher resolution can shed more light on how widespread potential areas of increased ozone might be.

EPA expects that on balance it will continue to be preferable to achieve regional-scale NO_X and ozone reductions whenever possible, even where current modeling indicates that increases in ozone may occur in parts of some areas. EPA requests comments on this general assessment, as well as on the discussions of individual regions below; comments including additional data and modeling results that challenge or reinforce EPA's views will be particularly valuable.

2. Role of Regional-Scale NO_X Control in Addressing Ozone Problems in Several Regions of the U.S.

EPA believes that the best data and modeling available show that NO_X in several large geographic areas of the country will continue to contribute greatly to ozone problems in nonattainment areas well into the future. Together, these areas account for about 87 percent of nationwide NO_X emissions from heavy-duty vehicles (see Chapter 7 of the RIA). Several of these regions are discussed individually below. Where there are existing or pending exemptions from local NO_X controls in the region, their relationship to regional-scale NO_X controls is also discussed.

a. Eastern United States

There is a growing body of evidence that reducing regional ozone levels holds the key to the ability of a number of the most seriously polluted nonattainment areas in the Eastern United States, in both the Southeast and the Northeast, to attain and maintain the ozone NAAQS. Regional Oxidant Modeling (ROM) studies conducted by EPA (called the ROMNET and Matrix studies) reinforce that reducing NO_X emissions in large geographical regions is the most effective approach for reducing ozone levels in those large regions.[19] At the same time, these studies, as well as ongoing UAM modeling by states, suggest that reductions in VOC emissions may be

[18] NO_X Supplement to the General Preamble, 57 FR 55628 (Nov. 25, 1992).

[19] See Regional Ozone Modeling for Northeast Transport (ROMNET), EPA Doc. EPA–450/4–91–002a (June 1991), and Chu, S.H., E.L. Meyer, W.M. Cox, R.D. Scheffe, ''The Response of Regional Ozone to VOC and NO_X Emissions Reductions: An Analysis for the Eastern United States Based on Regional Oxidant Modeling,'' Proceedings of U.S. EPA/AWMA International Specialty Conference on Tropospheric Ozone: Nonattainment and Design Value Issues, AWMA TR–23, 1993.

key to reducing locally generated peak ozone concentrations.[20]

In its analysis supporting the approval of a Low Emission Vehicle program in the mid-Atlantic and Northeast states comprising the Ozone Transport Region (OTR), EPA reviewed existing work and performed new analyses to evaluate in detail the degree to which NO_X controls are needed.[21] [22] These studies showed that NO_X emissions must be reduced by 50 to 75 percent from 1990 levels throughout the OTR. These studies showed that VOC emissions must also be reduced by 50 to 75 percent in and near the Northeast urban corridor. The studies also concluded that transport of ozone and precursors from upwind areas both inside and outside the OTR contributes significantly to ozone predictions in much of the OTR.

More recently, three studies have become available confirming the conclusions of the earlier studies. In one of these, the Agency performed new ROM analyses evaluating the eastern third of the U.S. and southern Canada.[23] Taken together, these studies strongly support the view that NO_X emissions must be reduced in the range of 50 to 75 percent throughout the OTR and that VOC emissions must be reduced by the same amount in and near the Northeast urban corridor to reach and maintain attainment.

Among the Northeast states, only Maine, based on unique air trajectory patterns, has sought an exemption from local NO_X control; this exemption is granted for the northern part of the state.

b. The Southeast

A recent Southern Oxidant Study report describes the results of research showing that, in the South, relatively high concentrations of ozone are measured in both rural and urban areas.[24] These pervasive levels of ozone, while for the most part not in excess of the current ozone NAAQS, form a background into which individual urban plumes are interspersed. Preliminary modeling analyses performed by the State of Georgia Department of Natural Resources suggests that it will be very difficult to meet the NAAQS in Atlanta during episodes similar to those modeled episodes, given the high background levels of ozone that appear to prevail in the South. Further analyses of monitored data by Southern Oxidant Study investigators suggest that the background ozone levels are likely to be more responsive to reductions in NO_X emissions than in VOC emissions. There are no petitions at this time for local NO_X exemptions in this region.

c. The Lake Michigan Area

Modeling studies performed to date for the states surrounding Lake Michigan (Wisconsin, Illinois, Indiana, and Michigan) under Phase I of their attainment demonstrations clearly indicate that reducing ozone and precursors transported into the nonattainment areas would have a significant effect on the number and stringency of local control measures needed to meet the ozone NAAQS.[25] These studies suggest that without such region-wide reductions, the necessary degree of local control will be very difficult to achieve, even with very stringent local controls. The EPA Matrix study referenced above reinforces that regional NO_X control will be effective in reducing ozone across the Midwest region. Taken together, the information available to date suggests that additional reductions in regional NO_X emissions will probably be necessary in meeting the NAAQS in the Chicago/Gary/Milwaukee area and downwind (including western Michigan), even though currently available modeling shows that there may be a detrimental effect from applying NO_X controls locally in and near the major nonattainment areas, in the absence of regional controls.

EPA has granted an exemption from local NO_X controls for several areas in the Lake Michigan region based on Phase I modeling. Phase II modeling is underway by these states, which the Agency is hopeful will clarify the conditions under which NO_X controls might cause an increase in ozone in the future, the magnitude of such an increase, and the parts of the nonattainment areas in this region in which this may occur.

d. Eastern Texas

There has been only limited modeling work focusing on the air quality characteristics of the eastern Texas region to date. The State of Texas has requested and been granted exemptions for the Houston and Beaumont/Port Arthur nonattainment areas, based on Phase I modeling that predicted that additional local NO_X controls could worsen the ozone problem. New modeling is underway by the state, but there is not yet enough data to draw conclusions about the potential effect of transport of ozone and its precursors on these areas. This uncertainty has led the state to request that the exemptions from local NO_X controls in these areas be granted on a temporary basis while more sophisticated modeling is conducted.

e. California

The State of California has submitted their ozone SIP to EPA for approval, relying on both NO_X and VOC reductions for most California nonattainment areas, comprising most of the populated portion of the state, to demonstrate compliance with the NAAQS. Specifically, the revised SIP projects that the following NO_X reductions are as follows: South Coast, 59 percent; Sacramento, 40 percent; Ventura, 51 percent; San Diego, 26 percent; and San Joaquin Valley, 49 percent. For VOC, the required reductions will be the following: South Coast, 79 percent; Sacramento, 38 percent; Ventura, 48 percent; San Diego, 26 percent; and San Joaquin Valley, 40 percent.

EPA has granted exemptions from local NO_X controls within three California nonattainment areas; EPA believes that these actions do not affect the broader need for regional NO_X controls in large parts of the state for ozone and PM NAAQS attainment and maintenance.

3. Secondary PM Formation as a Regional Issue

Measurements of ambient PM in some western U.S. urban areas that are having difficulty meeting the current NAAQS for PM–10 have indicated that secondary PM is a very important component of the problem. Nitrates

[20] Because of the significant role that NO_X plays in atmospheric chemistry, additional regional NO_X control can also be very helpful in addressing the problems of year-round NO_X deposition in the Chesapeake Bay and other nitrogen-limited lakes and estuaries and acid deposition and visibility degradation in the eastern U.S. (as well as parts of the West).

[21] The Northeast Ozone Transport Region (OTR) is comprised of the states of Maine, New Hampshire, Vermont, Massachusetts, Rhode Island, Connecticut, New York, New Jersey, Pennsylvania, Delaware, Maryland, and the Consolidated Metropolitan Statistical Area that includes the District of Columbia and northern Virginia.

[22] Environmental Protection Agency, Low Emission Vehicle Program for Northeast Ozone Transport Region; Final Rule, 60 FR 48673, January 24, 1995.

[23] Environmental Protection Agency, ''Summary of EPA Regional Oxidant Model Analyses of Various Regional Ozone Control Strategies,'' November 28, 1994; Kuruville, John et al., ''Modeling Analyses of Ozone Problem in the Northeast,'' prepared for EPA, EPA Document No. EPA–230–R–94–108, 1994; Cox, William M. and Chu, Shao-Hung, ''Meteorologically Adjusted Ozone Trends in Urban Areas: A Probabilistic Approach,'' Atmospheric Environment, Vol. 27B, No. 4, pp 425–434, 1993.

[24] ''The State of the Southern Oxidant Study (SOS): Policy-Relevant Findings in Ozone Pollution Research,'' 1988–1994. North Carolina State University, April 1995. See this reference for all statements in this paragraph.

[25] Lake Michigan Ozone Study; Lake Michigan Ozone Control Program: Project Report, December 1995.

(e.g., ammonium nitrate) are a primary constituent of this secondary PM. For example, on days when PM–10 is high in Denver, about 25 percent of the measured particulate is ammonium nitrate. In the Provo/Salt Lake City area, secondary PM accounts for approximately 50 percent of the measured PM, with nitrates being an important component of the secondary particulate. Secondary nitrate PM levels as high as 40 percent of the 24-hour PM–10 NAAQS standard have been measured in the Los Angeles Basin and concentrations of nitrate PM about one third of the NAAQS have been measured in the San Joaquin Valley.[26]

NO_X is a critical reactant in the complex chemical reactions which eventually result in the formation of atmospheric nitrates. Thus, control of NO_X emissions from heavy-duty vehicles will have a positive effect in reducing atmospheric ammonium nitrate. Because the atmospheric chemistry of secondary PM formation has common attributes to that of ozone, secondary PM also tends to be a regional, rather than a strictly local phenomenon. For this reason, EPA believes that, as is the case for ozone, regional NO_X controls can be very effective in reducing secondary PM over a significant area. For example, California's revised SIP concludes that secondary formation of nitrate particulate (primarily ammonium nitrate) contributes to the particulate problem in the South Coast Air Basin and the San Joaquin Valley. The Agency requests comment on the role of secondary particulate in PM–10 nonattainment in specific areas and the effect of regional NO_X controls on such emission; comments that include additional data will be particularly valuable.

The sources that contribute to PM levels can vary significantly from area to area. In many areas in the western U.S., re-entrained fugitive dust emissions dominate the overall PM emissions inventory. In large urban areas, however, direct PM emissions from heavy-duty diesel vehicles, as well as the secondary PM from NO_X produced by all heavy-duty vehicles, are believed to contribute significantly to elevated PM levels.

As can be seen from the discussion above, NO_X emissions have a number of different fates in the atmosphere. In some situations, such as the formation of atmospheric ozone, NO_X is used as a catalyst but not consumed. A single NO_X molecule can potentially be involved in many photochemical reactions producing several ozone molecules. In other cases, such as the formation of nitrate particulate and acid precipitation, NO_X is consumed. All NO_X eventually leaves the atmosphere in dry gas, particulate deposition, or in wet deposition. NO_X has a mean residence time in the atmosphere on the order of several days.

It is clear that heavy-duty vehicle NO_X emissions have a role in the formation of ozone, nitrate particulates, and acid precipitation. The relative partitioning varies across the country depending on factors such as geography, meteorology, and the concentration of other atmospheric pollutants. This preamble and the RIA contain information and analyses describing the positive impact of this proposal on ozone, PM, and other environmental effects, which EPA believes form a strong basis for this proposal. EPA is conducting additional studies to further refine our understanding of the role of NO_X in the formation of ozone and nitrate PM. EPA requests comment and data regarding the relative partitioning of NO_X emissions.

C. National Emission Trends Related to Ozone and PM

1. National NO_X and VOC Emissions Trends

Figure 1 displays projected total NO_X emissions over the time period 1990 to 2020, including a breakdown between stationary and mobile source components over the same period.[27] Figure 2 presents similar data for VOC emissions for the period 1990 to 2010 (later-year projections for VOC are under development).[28] As the figures show, a similar pattern is projected for both of these ozone precursor emissions. Initially, the projections indicate that national inventories will decrease over the next few years as a result of continued implementation of finalized CAA stationary and mobile source NO_X control programs. After the year 2000, however, when implementation of these CAA programs is largely completed and the pressure of growth continues, these downward trends are expected to reverse, resulting in rising national VOC and NO_X emissions.

BILLING CODE 6560–50–P

[26] Summary of Local-Scale Source Characterization Studies, EPA–230–F–95–002, July, 1994.

[27] A discussion of the data used for projecting emissions from various sources is found in the Regulatory Impact Analysis.

[28] The data in these and the succeeding figures in this proposal are discussed in the RIA, and take into account the expected effects of various CAA control programs that have been promulgated at the time of the modeling. These include Tier I tailpipe standards, new evaporative emission test procedures, enhanced inspection and maintenance requirements, reformulated gasoline, oxygenated fuels, and California LEV (Low Emission Vehicle) requirements. Nonroad NO_X emission projections also reflect the future effects of existing nonroad emission regulations. The potential effects of contemplated National LEV requirements or other programs are not reflected in the data. In these figures, nonroad emission data includes emissions from a broad range of nonroad sources including locomotives, aircraft, and marine vessels.

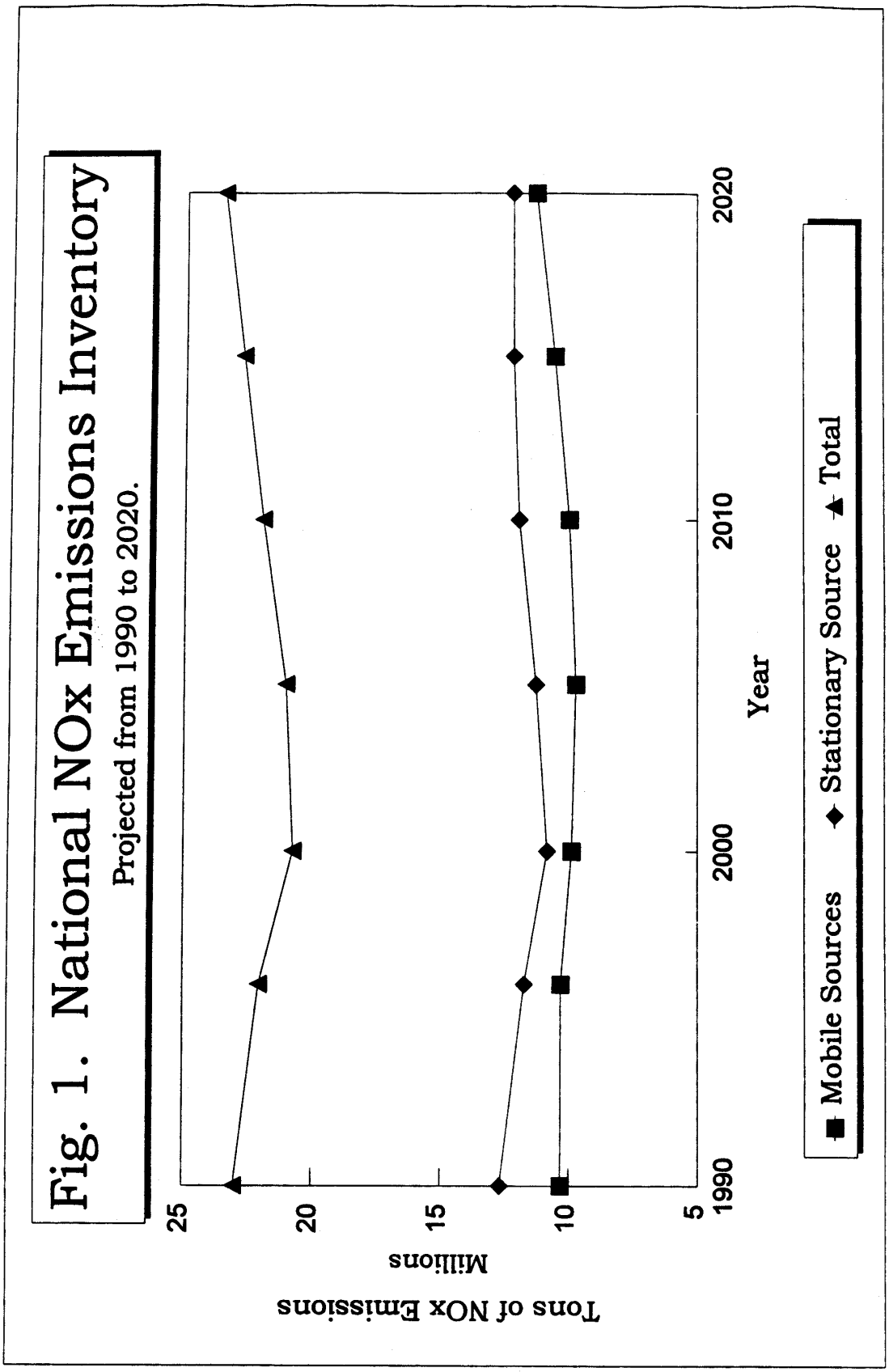
Fig. 1. National NOx Emissions Inventory
Projected from 1990 to 2020.
Tons of NOx Emissions
Millions
25
20
15
10
5
1990
2000
2010
2020
Year
Mobile Sources
Stationary Source
Total

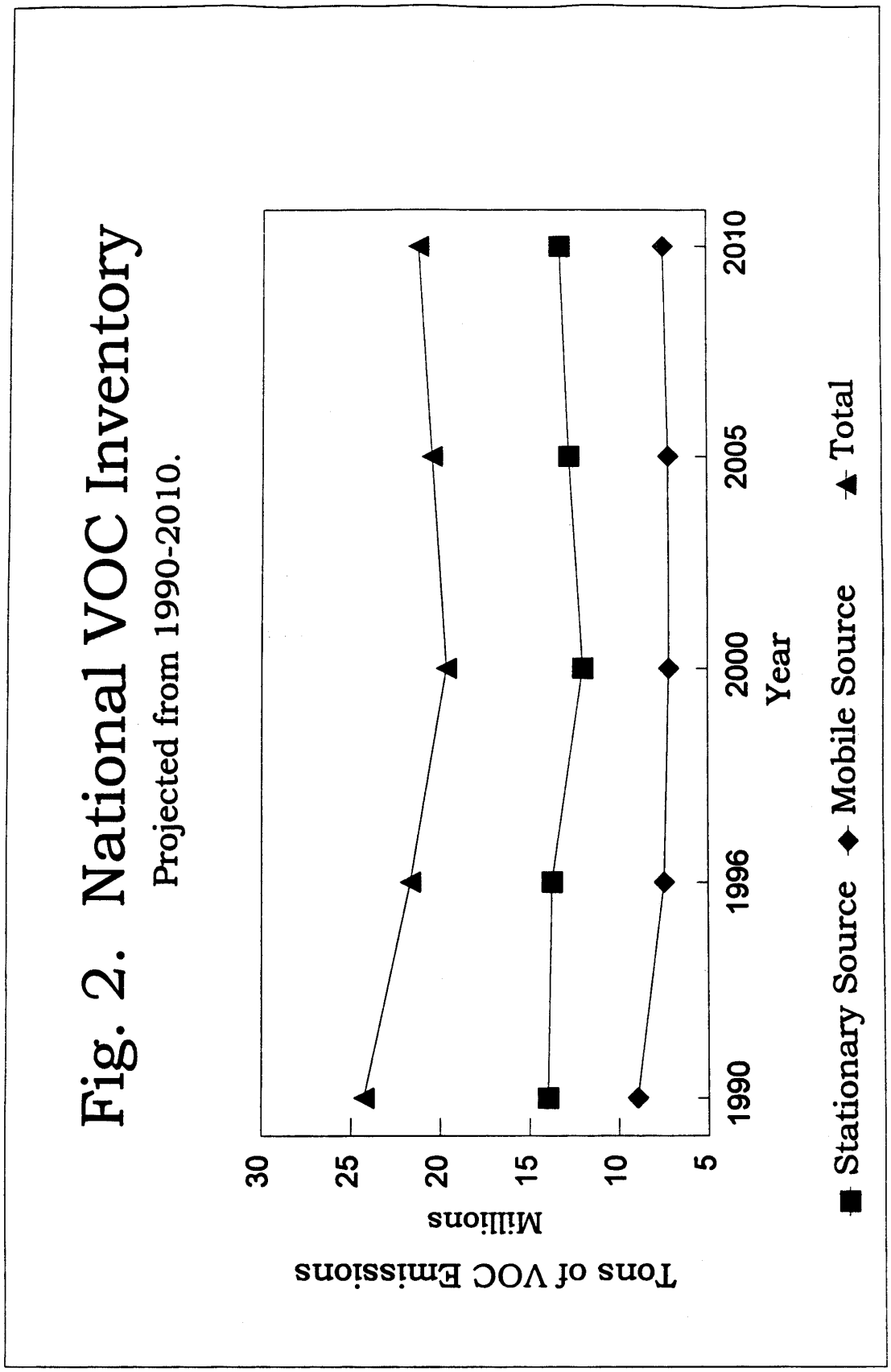

BILLING CODE 6560–50–C

In its comments on the ANPRM, API observed that monitoring data from some areas show progress in reducing ozone. EPA agrees that this progress appears to be occurring and the Agency believes that this progress may continue for the next few years in many areas as current NO_X and VOC programs are implemented. As shown in Figures 1 and 2 above, however, EPA believes that, in the absence of significant new control efforts, the current downward trends in ozone precursor emissions will be reversed in the middle of the next decade. The Agency also believes that the projected increase in emissions will again increase ozone levels in urban areas. EPA continues to examine this issue and welcomes new modeling analyses that relate NO_X and VOC emission trends to ozone levels.

2. PM Air Quality Issues and Emission Trends

The overwhelming proportion of PM–10 emissions is created by wind erosion, accidental fires, fugitive dust emissions (from road surfaces, agricultural tilling, construction sites, etc.), and other miscellaneous sources. As much as 85 percent of PM–10 in nonattainment areas can be composed of these ''crustal'' and miscellaneous materials. Since these sources are not readily amenable to regulatory standards and controls, it is appropriate to focus on the ''controllable'' portion of the particulate pollution problem when considering the need for PM controls. The result is shown in Figure 3, which displays national trends in PM–10 levels from stationary and mobile sources, including secondary nitrate PM, projected for the twenty-year period 1990 to 2010. Similar to the pattern discussed above for VOC and NO_X emissions, the figure shows that total PM from these sources will decline slightly as the beneficial effects of the 1990 CAA Amendments continue to be felt. However, in the absence of additional controls, including NO_X controls, mobile source and industrial source PM emissions are expected to rise after 2000.

BILLING CODE 6560–50–P

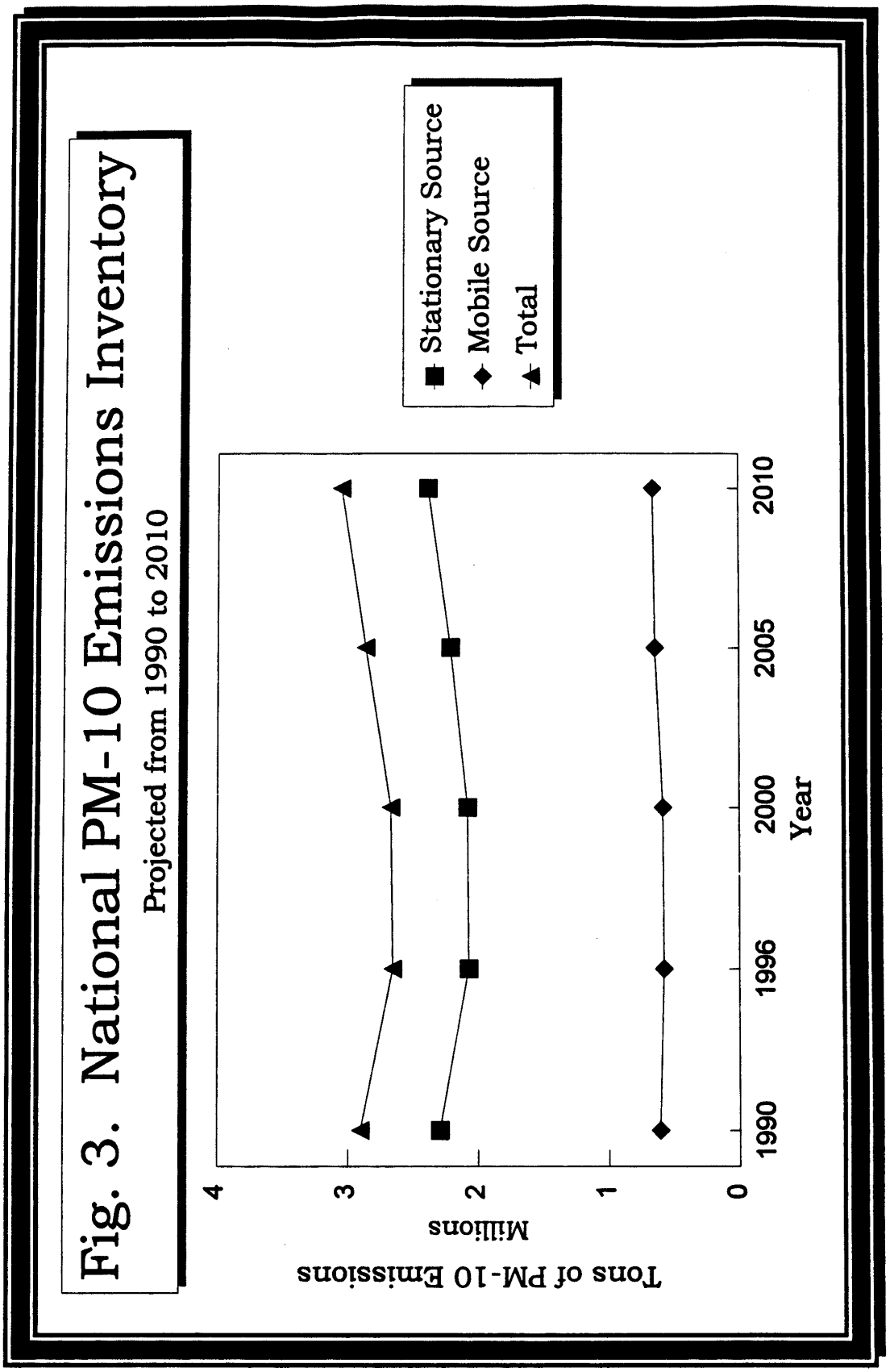

BILLING CODE 6560–50–C

Currently, there are 82 PM–10 nonattainment areas across the U.S. As discussed in section II.B.3. above, in some areas of the West, nitrate particulate represents between 15 and 40 percent of total particulate matter. The level of nitrate PM is a function of the availability of NO_X. It is appropriate to expect that the relative proportions of nitrate particulate caused by stationary and mobile sources are similar to the relative contributions of NO_X by these source categories. Thus, based on the NO_X projections of Figure 1, which EPA believes are generally typical of NO_X projections in the West, EPA estimates that about half of total nitrate PM is caused by mobile sources, or about one tenth of total PM–10 in the western part of the country. In the eastern part of the country, peak fine particulate matter levels occur in the summer, primarily because photochemical processes involving SO_2 and NO_X driven by strong sunshine accelerate the formation of sulfate and nitrate particulate matter. Thus, reducing NO_X over a broad area is one strategy for reducing the net fine particle formation in the East. EPA requests comment, including applicable data whenever possible, on its assessment of the relationship of NO_X to ambient nitrate PM.

D. Contribution of Heavy-Duty Vehicles to Mobile Source Emissions

Heavy-duty vehicles represent about 12 percent of nationwide NO_X emissions and are also an important source of VOC (as a result of HC emissions) and PM throughout the country. This section reviews EPA's current estimates of the contribution of heavy-duty vehicles to the nation's ozone, PM, and NO_X air pollution problems now and into the future. The projections presented here incorporate the emission reductions from all national mobile source emission control programs for which final regulations were in place at the time of the modeling and are discussed further in the RIA.

1. National Mobile Source NO_X Emissions Trends

Figure 4 shows the total mobile source NO_X inventory by emission source (light-duty vehicles, heavy-duty vehicles, and nonroad engines) projected over the next 25 years. For light- and heavy-duty vehicles, the figure shows a decline in emissions over the next decade as current programs phase in. The figure also shows, however, that this current downward trend is projected to end, resulting in a return to current NO_X levels in the absence of further controls. Nonroad emissions are projected to rise throughout the period.

BILLING CODE 6560–50–P

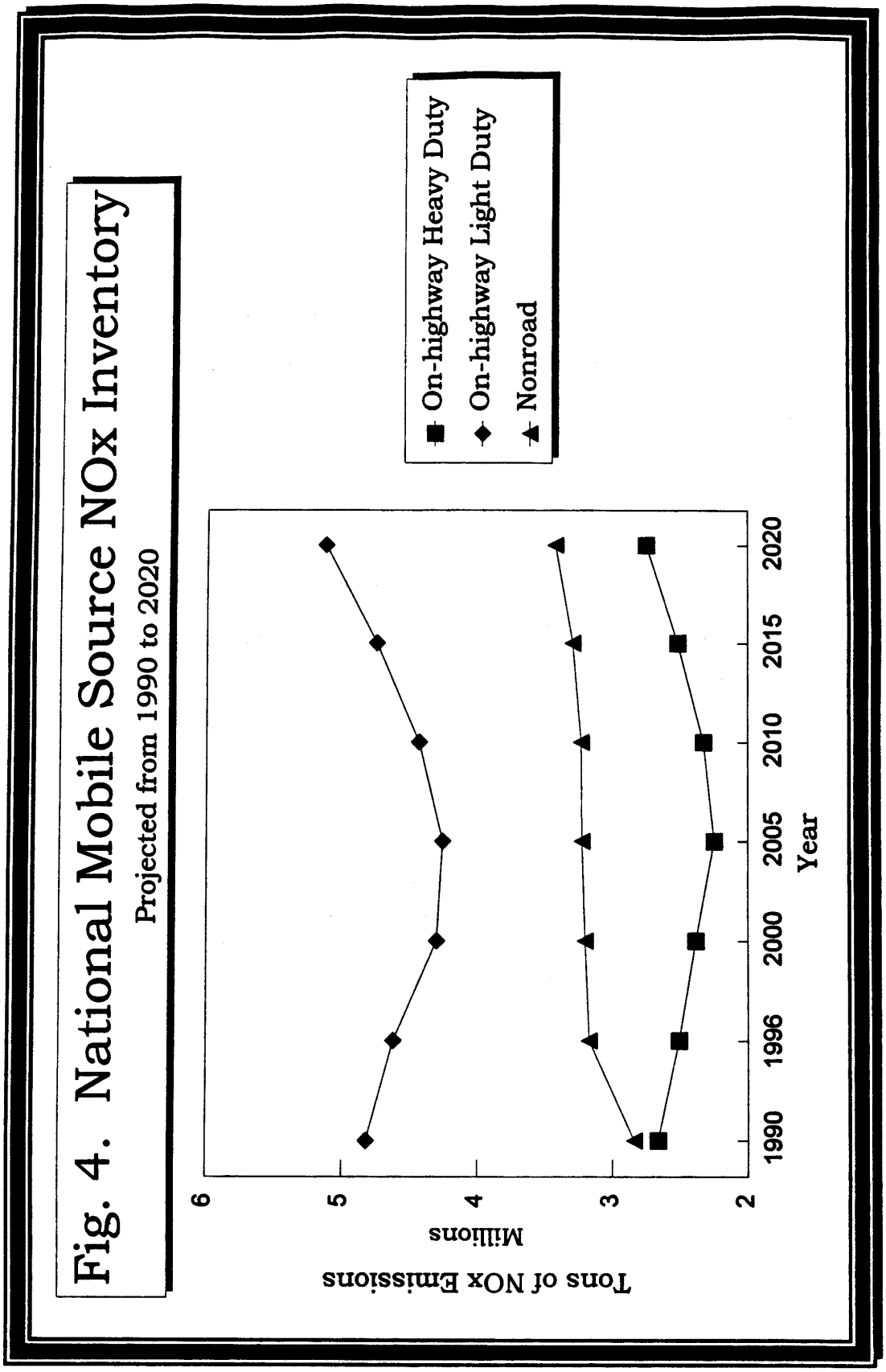

BILLING CODE 6560–50–C

2. National Mobile Source VOC Emissions Trends

Figure 5 shows the total national mobile source VOC inventory by emission source. As with the NO_X emission projections in Figure 4, this figure shows that light-duty vehicle emissions can be expected to decline for some years, but then begin rising in the 2005 time frame. VOC emissions from heavy-duty vehicles and nonroad engines are projected to rise gradually throughout this period.

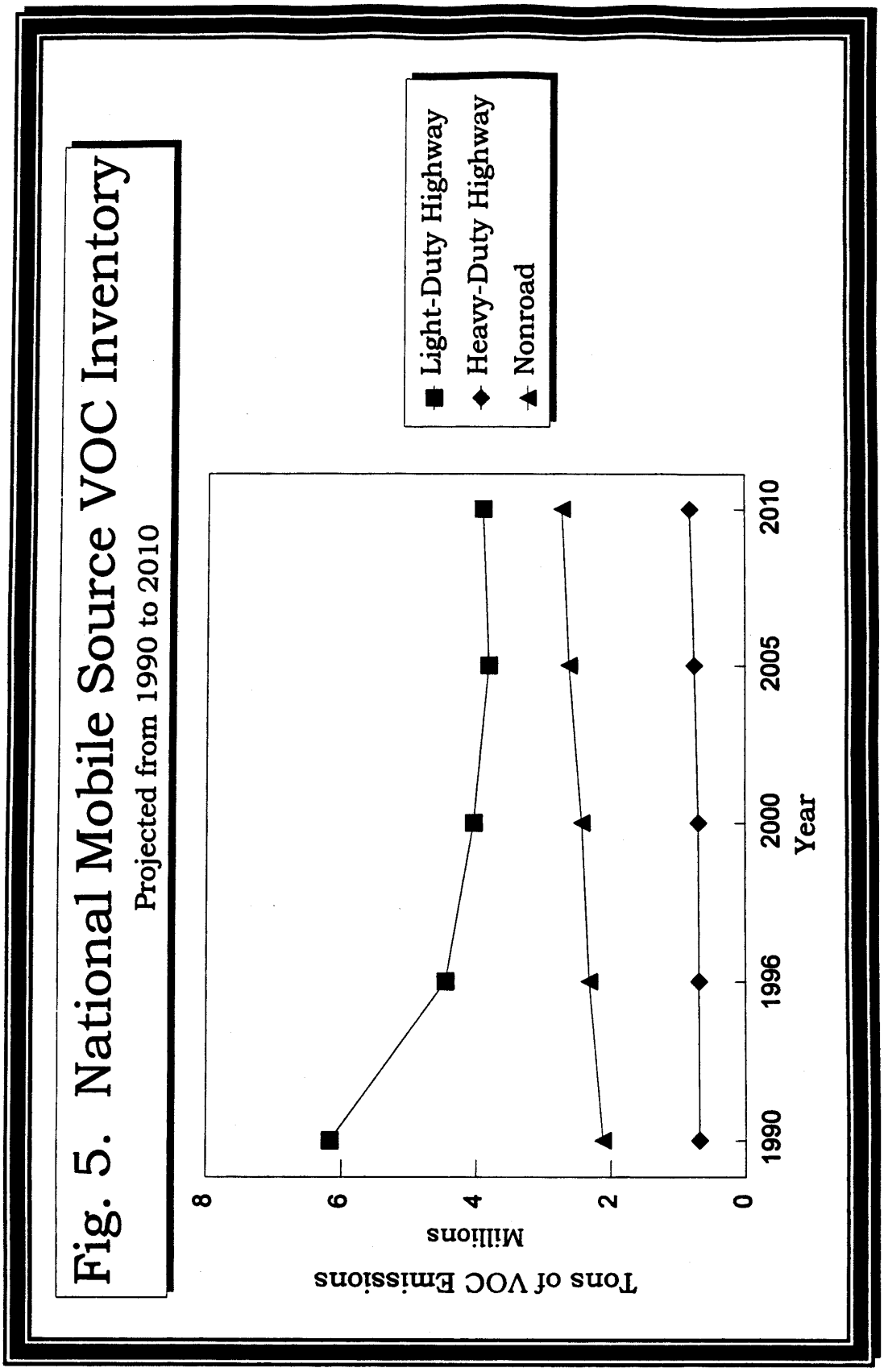

BILLING CODE 6560–50–C

3. National Mobile Source PM Emissions Trends

EPA's latest projected trends for directly emitted mobile source emissions of PM–10 are shown in Figure 6. The figure shows that over the next 15 years the contribution of heavy-duty vehicles and other highway sources to PM–10 pollution are expected to decrease significantly and then remain relatively constant well into the next decade.

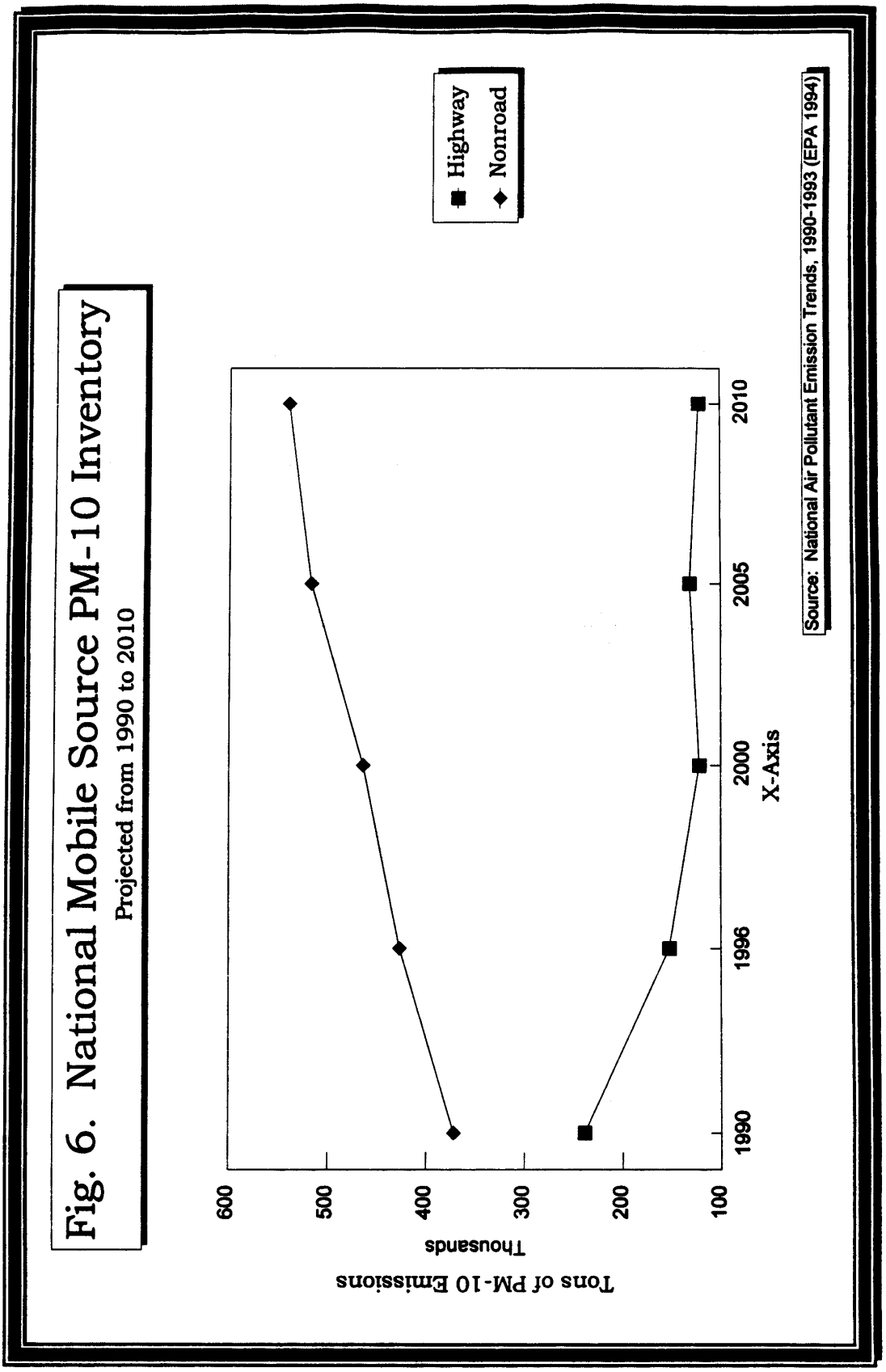
Fig. 6. National Mobile Source PM-10 Inventory
Projected from 1990 to 2010
Highway
Nonroad
Tons of PM-10 Emissions
Thousands
600
500
400
300
200
100
1990
1996
2000
2005
2010
X-Axis
Source: National Air Pollutant Emission Trends, 1990-1993 (EPA 1994)

The emission data on which Figure 6 is based do not include secondary nitrate PM–10 produced by the transformation of NO_X in the atmosphere. EPA believes that for those areas where secondary PM formed from NO_X is a problem, the proportions of total secondary PM that may be attributed to different emission source categories mirror the proportions of total NO_X emissions from those sources in those areas. Thus, based on the trends for NO_X emissions shown in Figures 1 and 4 above and assuming that the availability of ammonia in the atmosphere remains roughly constant, the contribution of heavy-duty vehicles to secondary PM problems can be expected to decline slightly in the next few years and then to begin to increase again, likely reaching and exceeding current levels after about 2020. Also based on Figures 1 and 4, EPA believes that on average the proportion of total nitrate PM that may be attributed to heavy-duty vehicles is in the same range as the proportion of total NO_X contributed by these vehicles, or roughly 10 percent.

As discussed earlier in this proposal, EPA has not completed its assessment of the relative importance of fine PM to health and welfare concerns as compared with PM–10. As a result, EPA has not yet developed specific projections showing the contribution of heavy-duty vehicles to total fine particulate emissions. However, since nearly all mobile source related PM, both directly emitted PM and secondary nitrate PM formed from NO_X emissions, falls in the fine particulate category, it follows that the relative contribution of heavy-duty vehicles to total fine particulate is greater than their contribution to total PM–10.

E. Conclusions

1. The Rationale for Controlling Heavy-Duty Vehicle Emissions

EPA believes that immediate proposal of new emission standards for highway heavy-duty engines is appropriate. The decision to issue this NPRM is based on thorough consideration of a range of relevant factors, as described above. Section II.A. presented the serious effects to human health and the environment of elevated levels of ozone and other chemical products of NO_X emissions, including secondary PM . That section describes a range of serious respiratory health effects that have been closely connected to exposure to ozone levels exceeding the NAAQS, which exist in many areas of the country. In light of the many years of research by many parties into the health effects of ozone, the Agency believes that a clear picture has emerged that, not only those with existing respiratory conditions, but also healthy adults and children are in danger of experiencing medical problems and a reduced quality of life when exposed to elevated levels of ozone. Also discussed were the variety of health concerns that have been associated with exposure to PM at levels above the current NAAQS. Beyond these and other serious health concerns, Section II.A. also discussed major impacts on vegetation, crops, coastal estuaries, visibility, and other effects that result from the transformation of NO_X into ozone, acid deposition, and nitrate PM formed from NO_X. The current NAAQS levels reflect the need to address exposure to ozone and PM wherever the NAAQS standards are exceeded.

Section II.B. discussed EPA's belief that the widespread exposure of people to elevated ozone levels will continue and worsen in the absence of major regional-scale reductions in NO_X. This section discussed the regional characteristic of the ozone problem and how various large areas of the country are projected to require regional-scale NO_X controls to reach and maintain attainment of the ozone standard. EPA believes this remains true even where local NO_X control waivers must be granted under the CAA. This section also noted that regional-scale control of NO_X would be beneficial in reducing the formation of secondary PM in some areas of the western U.S. and would thereby assist these areas in reaching and attaining the PM NAAQS.

Section II.B. also presented projections of emissions over the next 20 to 30 years to help assess the likelihood of continued air quality problems in the future. In general, EPA's most recently developed emission inventories show that national levels of ozone precursors will tend to drop slightly, but only temporarily, after which they will return to current levels. The link of these projected future emissions to the formation of ozone was reinforced by recent air quality modeling projecting continued ozone problems in major areas of the country in the absence of new controls. The information assembled in this section leads EPA to believe that a strong need exists for new regional-scale NO_X control programs over large areas of the country if the negative trends are to be arrested and reversed. Similarly, the data on PM suggests that secondary PM reductions will be helpful in reversing a national trend of increasing PM emissions, especially in the western states.

Section II.C. presented national mobile source emission inventories over the next 20 to 30 years, divided into the key mobile source categories. These presentations showed that heavy-duty vehicles contribute significantly to mobile source NO_X , VOC, and PM emissions and to the overall trends in mobile source emissions into the future. In its comments on the ANPRM, API gave several reasons why projections of future emission inventories may be in error and questioned the future contribution of heavy-duty vehicle emissions. Although EPA believes that the projections presented in this proposal can be improved and will continue to take actions to improve them, the Agency believes that they represent the highest quality estimates available today. As such, they clearly indicate that heavy-duty vehicles will remain significant contributors to these emissions well into the future.

After consideration of all the available information, including comments received on the ANPRM, EPA believes that heavy-duty vehicles contribute significantly to air pollution, which has a serious impact on health and the environment. The Agency believes that this body of information on balance supports taking action to revise heavy-duty engine emission standards, which will reduce NO_X, HC, and secondary PM from this segment of mobile sources.

2. Appropriateness of a National Heavy-Duty Vehicle Program

EPA further believes that the mobile source emission control program proposed in this action is most appropriately national in scope, for several reasons. First, as summarized above, the regional character of both ozone and secondary PM formation leads EPA to believe that major new NO_X controls over large regions of the country are needed to achieve the regional-scale ozone and PM reduction many areas require. Control of NO_X from heavy-duty vehicles and other mobile sources are effective approaches to such regional control since the resulting control covers a wide area. Second, heavy-duty vehicles, like other mobile sources, represent an emissions source that itself crosses boundaries of nonattainment areas, states, and regions. A mobile source control program that covers only certain parts of the country has the disadvantage of allowing high-emitting vehicles to travel regularly into areas with more stringent requirements, compromising the effectiveness of the program. Finally, the structure and marketing patterns of the engine and vehicle manufacturing industries would make it impractical and inefficient for a

patchwork of different emission standards to be enacted in various parts of the country. Rather, for engine manufacturers to achieve economies of scale and to concentrate research and development resources most effectively, EPA believes it is most practical to establish a single set of emission requirements applying to engines in trucks and buses used anywhere in the country. A key reason why EPA, CARB, and engine manufacturers agreed to a Statement of Principles was the potential for nationally harmonized requirements for heavy-duty vehicles.

3. Issues of Timing

EPA also believes that for the anticipated benefits of new highway heavy-duty engine emission standards to be available when they are needed, it is best to finalize such a program in the near future. There are several reasons for and positive consequences of expeditious promulgation of new emission requirements for heavy-duty engines. The primary reason to begin the process now is that the current emission and air quality projections discussed above project a need in many areas of the country for significant additional emission reductions in the post-2000 period to reach and maintain attainment.

In addition, the highway heavy-duty engine manufacturers have communicated to EPA that to meet the stringent standards proposed in this action for model year 2004 and later, they need to have the precise emission requirements affecting them in place and begin work toward those goals very soon. The industry's perspective is based on its expectation that the standards proposed here would represent a very significant technological challenge requiring large investments by the members of the industry. EPA's technology assessment is consistent with the industry view. If new standards are established by approximately the end of 1996, about two years will be available before the proposed 1999 technology review for manufacturers to marshall appropriate resources to achieve significant technological progress. Then, if such progress is confirmed at that time, about four years will remain for additional resources to be assembled and the new technologies to be developed and incorporated into 2004 model year engines. Based on the Agency's technology assessment as of the time of this proposal, EPA agrees that it is best to set the process in motion now to achieve the full benefits of cleaner heavy-duty vehicles beginning in 2004.

Another compelling reason to initiate the process of enacting new heavy-duty engine emission requirements soon is that the Agency is proposing to encourage voluntary marketing of cleaner engines, especially engines that incorporate new technologies, earlier than 2004 (see Section III.B. below for proposed changes to the Averaging, Banking, and Trading program). An expeditious completion of the rulemaking process would encourage manufacturers to consider such options in the earliest possible model year.

State air quality planners will also benefit if the program proposed in this action can be formally established soon. States must soon finalize ozone SIPs demonstrating attainment in the years ahead, and expeditious EPA action on additional heavy-duty vehicle emission reductions will allow states to know whether to incorporate expected reductions from heavy-duty vehicle controls into their SIPs. At the same time, any significant delay in promulgation might also require a delay in the year of implementation past 2004, postponing the full benefit of the program as an air quality strategy. For this and the other reasons given in this section, EPA plans to finalize the proposed requirements as soon as possible should the Agency reach a final determination that such a program is warranted.

III. Proposed Program for Reducing Highway HDE Emissions

A. Background on Highway HDE Standards

Under EPA's classification system, vehicles with a gross vehicle weight rating (GVWR) over 8,500 pounds are considered heavy-duty vehicles. (The State of California classifies the lighter end of EPA's heavy-duty class as ''medium-duty vehicles.'') Heavy-duty engines (HDEs) are used in a wide range of heavy-duty vehicle categories, from small utility vans to large trucks. Because one type of HDE may be used in many different applications, EPA emission standards for heavy-duty vehicles are based on the emissions performance of the engine (and any associated aftertreatment devices) separate from the vehicle chassis. Testing of an HDE consists of exercising it over a prescribed duty cycle of engine speeds and loads using an engine dynamometer.

Highway HDEs are categorized into diesel and otto-cycle (predominantly gasoline-fueled) engines with each, in some cases, having different standards and program requirements. EPA has further subdivided heavy-duty diesel engines (HDDEs) into three subclassifications or ''primary intended service classes''; light, medium, and heavy HDDEs. HDDEs are categorized into one of the three subclasses depending on the GVWR of the vehicles for which they are intended, the usage of the vehicles, the engine horsepower rating, and other factors [29]. The subclassifications allow EPA to more effectively set requirements that are appropriate for the wide range of sizes and uses of HDDEs. With one exception, emission standards are the same for HDDE in all of the subclasses but other programmatic requirements differ as appropriate. Engines used in ''urban buses'' (large transit buses)[30], which fall mostly in the heavy HDDE subclass, have somewhat different standards and program requirements. The standards and program requirements for the various categories and types of engines are discussed below and in following sections, as appropriate.

Emissions from HDEs are measured in grams of pollutant per brake horsepower-hour (g/bhp-hr) or, in more recent regulations, in grams per kilowatt hour (g/kw-hr). These units for emission rates recognize that the primary purpose of HDEs is to perform work and that there is a large variation in work output among the engines used in heavy-duty applications. This system allows EPA to apply the same standards to a very wide range of engines.

Emission standards have been in place for highway diesel and gasoline-fueled HDEs since the early 1970s. The first regulations focused on control of emissions of smoke. Subsequent regulations broadened emission control requirements to include gaseous and particulate emissions. The 1990 amendments to the Clean Air Act required EPA to set more stringent standards for NO_X emissions from all heavy-duty highway HDEs and for PM from urban buses. 42 U.S.C. 7521(a)(3), 7521(f), and 7554(b).

The current exhaust emission standards for highway heavy-duty diesel and gasoline engines are presented in Table 1. Standards for urban buses, which specify more stringent PM levels than those applying to other HDEs, are displayed separately in the table.

[29] 40 CFR Part 86.090–2.

[30] 40 CFR Part 86.093–2.

TABLE 1.—HIGHWAY HEAVY-DUTY EMISSION STANDARDS

Year	HC (g/bhp-hr)	CO (g/bhp-hr)	NO_X (g/bhp-hr)	Diesel particulate (g/bhp-hr)
Diesel:				
1991–93	1.3	15.5	5.0	0.25
1994–97	1.3	15.5	5.0	0.10
1998	1.3	15.5	4.0	0.10
Urban Buses:				
1991–92	1.3	15.5	5.0	0.25
1993	1.3	15.5	5.0	0.10
1994–95	1.3	15.5	5.0	0.07
1996–97	1.3	15.5	5.0	*0.05
1998	1.3	15.5	4.0	*0.05
Otto-cycle	HC (g/bhp-hr)	CO (g/bhp-hr)	NO_X (g/bhp-hr)	Evaporative HC (g/test)
1991–97:				
(A)	1.1	14.4	5.0	3.0
(B)	1.9	37.1	5.0	4.0
1998 (A)	1.1	14.4	4.0	3.0
(B)	1.9	37.1	4.0	4.0

Note:
''(A)'' denotes the standard for engines in trucks ≤14,000 lbs. Gross Vehicle Weight Rating (GVWR).
''(B)'' denotes the standard for engines in trucks ≥14,000 lbs. GVWR.
*.07 g/bhp-hr in-use.
This table does not contain all applicable standards. A complete set of standards may be found in 40 CFR Part 86.

Under section 202(a)(3), emission standards for highway HDEs are set at the ''greatest degree of emission reduction achievable through the application of technology which the Administrator determines will be available for the model year to which such standards apply, giving appropriate consideration to cost, energy, and safety factors associated with the application of such technology'' (42 U.S.C. 7521(a)(3)(A)). In addition, section 202(a)(3) provides that highway HDE manufacturers will have four model years of lead time before any new emission standards may be implemented (42 U.S.C. 7521(a)(3)(C)). The Act also provides that standards for HDEs apply for at least three model years to provide stability to any heavy-duty standards. *Id*. Finally, the Act precludes new NO_X emission standards for highway HDEs before the model year 2004. 42 U.S.C. 7521(b)(1)(C).

B. Description of Today's Proposal

In this action, EPA proposes a comprehensive program to address the significant contribution of highway HDEs to ambient pollutant concentrations and the resultant air quality problems around the country. The proposed program consists of stringent new emission standards, changes to maintain the durability of HDE emissions in use, and changes to the current Averaging, Banking, and Trading regulations to encourage the early introduction of cleaner engines and new technology.

1. Emission Standards

a. Standards Proposed in Today's Action. EPA proposes new emission standards for model years 2004 and later. These standards are in the form of combined non-methane hydrocarbons plus nitrogen oxides (NMHC + NO_X) and are presented in units of g/bhp-hr. They would apply to otto and diesel cycle engines fueled by gasoline, diesel, methanol, and gaseous fuels and their blends. Manufacturers would have the choice of certifying their engines to either of two optional sets of standards:

2.4 g/bhp-hr NMHC + NO_X

or

2.5 g/bhp-hr NMHC + NO_X with a limit of 0.5 g/bhp-hr on NMHC

EPA proposes that all other emission standards and other requirements applying to model year 1998 and later model years remain unchanged.

For the most part, EPA expects that either of these standards will result in the essentially the same NO_X and NMHC emission rates in-use. As is discussed elsewhere in the proposal and in the supporting RIA, EPA expects that the proposed standards will generally result in NMHC levels of about 0.4 g/bhp-hr and NO_X levels of about 2.0 g/bhp-hr. Most, but not all, HDEs now have HC certification levels of 0.5 g/bhp-hr or less. The standards will result in modest NMHC reductions for the HDE class taken as a whole and will serve as a cap against increases in NMHC emissions as manufacturers implement NO_X control strategies. The expected NO_X levels would result in reductions of 50 percent as compared to the 1998 standard. For administrative simplicity, EPA would prefer only one standard and based on current HC certification levels the 2.4 g/bhp-hr standard seems most appropriate. However, the manufacturers would prefer the flexibility of the alternate standard and EPA sees no environmental harm from offering this option. EPA asks comment on whether two standards are appropriate and why.

The form of the proposed standards differs in some aspects from the current and 1998 model year standards for HDEs presented in Table 1. First, EPA is proposing a combined standard (NMHC+NO_X) instead of separate standards. EPA is using this approach because for in-cylinder control strategies there is a tradeoff between HC and NO_X control. Thus, expressing the requirements as a combined standard provides the manufacturers some small amount of additional flexibility. Further, EPA sees no environmental harm from providing this flexibility. While there is not a direct one to one trade-off in every area of the country, both pollutants are generally considered key ingredients in the formation of ozone. Thus a little more control of one pollutant at the expense of the other should provide essentially the same air quality benefits as if the engines were meeting separate standards for NO_X and NMHC at comparable levels (nominally 2.0 g/bhp-hr NO_X and 0.4 g/bhp-hr NMHC). Second, EPA is proposing an NMHC standard instead of a total HC

standard. This approach is being proposed primarily because methane is largely unreactive in the formation of ozone and thus its control would not help to achieve the ozone air quality objectives of this proposal. This is not intended to suggest that the control of methane is not valuable in the context of other environmental objectives EPA may consider in the future, but methane emissions from these engines are only a small fraction of their total HC and thus foregoing control at this time is reasonable. Both the use of an NMHC standard and the use of a combined standard is also consistent with the current California LEV program requirements for medium-duty vehicles and the requirements for HDEs prescribed in section 245 of the 1990 amendments to the Clean Air Act.

The proposed standards (rooted in the California Federal Implementation Plan and identified in the SOP) represent a reduction of more than 50 percent in NO_X and NMHC/HC over current requirements. Reductions of this magnitude are a significant challenge, especially for diesel HDEs, and will require a major research and development effort to achieve. At this time there is not one firm set of technologies to be applied to all diesel HDEs to achieve the proposed standards. Diesel HDEs will need to consider approaches from a number of different technological strategies and control hardware which have been identified and assessed in a few laboratory programs and then apply their choices to their 2004 models. In many cases these strategies and hardware have not been used on production diesel engines and there are substantial development challenges ahead to apply this technology cost effectively with due consideration to impacts on operating and maintenance costs as well as engine durability. Regulatory enhancements such as the proposed revisions to the Averaging, Banking, and Trading program (as discussed below) will also help to enhance overall feasibility of the standards for all engine models. As is discussed elsewhere in proposal and in the supporting RIA, EPA believes the proposed standards while very challenging are technically feasible and otherwise appropriate in the context of section 202(a)(3). With about eight years remaining before the 2004 model year, manufacturers have an unprecedented amount of leadtime to fully assess, develop, and optimize the various control approaches and to integrate them into their 2004 model year products in a manner which minimizes engine costs and fuel impacts and does not raise safety concerns. Indeed the widespread support of the HDE industry for the SOP tends to support EPA's conclusion.

While there are promising technologies and aftertreatment control strategies which otto cycle (gasoline) HDEs may employ to achieve the proposed standards, these still require development if they are to be applied to all different otto-cycle engine models and the standards are to be met in use. EPA believes it will be easier technologically for otto-cycle (gasoline) HDEs to achieve the proposed standards but proposes the same standards for otto and diesel cycle HDEs for two reasons. First, work is required to apply these technologies/aftertreatment control strategies to all otto cycle engines. EPA expects that much of this progress will be made in response to the 1998 HDE NO_X standard and others in response to market competitive pressures. Nonetheless, EPA still expects that some models will need to develop and employ technology/aftertreatment control upgrades to meet a 2.4 g/bhp-hr NMHC + NO_X standard. This may especially be the case for the few otto-cycle HDE families which may not employ closed loop control, fuel injection systems with catalysts before 2004. Second, because otto and diesel cycle HDEs compete in the market place, there is a degree to which for market equity reasons it is appropriate to apply standards of equivalent stringency to both classes of engines. This approach reduces the possibility that emission standards could have disruptive effect on the HDE market. Both EPA and the California Air Resources Board have set HC and NO_X standards of equivalent stringency for otto-cycle and diesel HDEs in the past.

b. 1999 Rulemaking Review

EPA proposes to conduct a special review in 1999 to reassess the appropriateness of the standards under the CAA including the need for and the technological and economic feasibility of the standards at that time. Before making a final decision in this review regarding the appropriateness of these standards under the CAA, EPA intends to issue a proposal regarding this issue and offer an opportunity for public comment on whether the standards continue to be technologically feasible for implementation in 2004 and consistent with the CAA. Following the close of the comment period, EPA would issue a final agency decision under section 307 of the CAA.

If in 1999 EPA finds the standards to not be feasible for model year 2004 or otherwise not in accordance with the Act, EPA will propose adjusted standards which do not exceed the following:

2.9 g/bhp-hr NMHC + NO_X
or
3.0 g/bhp-hr NMHC + NO_X with a limit of 0.6 g/bhp-hr on NMHC.

However, if EPA determines that the feasibility of the standards requires diesel fuel changes and EPA does not engage in rulemaking to require such changes, EPA will propose adjusted standards which do not exceed the following:

3.4 g/bhp-hr NMHC + NO_X
or
3.5 g/bhp-hr NMHC + NO_X with a limit of 0.7 g/bhp-hr on NMHC.

The standards finalized in the rulemaking initiated by today's proposal would stay in effect unless revised by this subsequent rulemaking procedure. EPA has included language in the proposed regulatory text regarding the 1999 review.

Over the next several years EPA will be actively engaged in programs to evaluate technology (engine/fuel quality) interactions/developments and progress toward meeting the proposed standards through in-house programs and coordination with the involved industries. To aid in this process EPA has established a working group under its Mobile Sources Technical Advisory Sub-Committee to the CAA Advisory Committee to solicit technical advice and input from engine, fuel, and related experts from around the country. If as a result of this evaluation, EPA reaches the view that the available information is sufficient to indicate that the feasibility of the standards may depend on modifications to diesel fuel, any potential for diesel fuel changes could then be considered within the context of the 1999 Review. EPA recognizes that any consideration of potential fuel diesel modifications must be appropriate under section 211(c) of the CAA (including considerations of cost, cost effectiveness, and other relevant cost considerations), and is especially sensitive to the substantial leadtime requirements that may be associated with fuel modifications.

Based on the information presented in the RIA and in section IV of this proposal, EPA believes the proposed standards are technologically feasible and otherwise appropriate under the CAA. Nonetheless, especially for diesel engines, it is clear that a significant amount of research and development will be needed to comply. The alternate standards discussed above are designed to serve as a backstop in the event that

the 1999 review leads to the conclusion that a revision is appropriate. Based on the technical analysis in the RIA, these levels represent upper limits for these potential revisions. If during the course of the review EPA concludes that a revision is appropriate, a rulemaking will be conducted to determine the appropriate level for the model year 2004 and later standards.

c. Other Issues Related to HDE Emission Standards. Several commenters to the ANPRM expressed concern with the levels of the emission standards EPA is proposing today. Representatives of environmental organizations and several states argued that EPA should propose more stringent standards for one or more pollutants. While EPA believes at this time that today's proposed program represents the best combination of standards that are achievable given our current understanding of technological constraints, as explained below, and the other criteria set forth in CAA section 202(a)(3), EPA remains open to additional information and will consider finalizing more stringent standards in this action or proposing more stringent standards by separate action if such standards are warranted.

In comments the Agency has received thus far, commenters generally address potential standards for NO_X and PM separately and somewhat independently. These comments urge the Agency to propose an NMHC + NO_X standard low enough to assure that NO_X levels of 2.0 g/bhp-hr are reached by all diesels, expressing concern that a 2.4 or 2.5 g/bhp-hr NMHC + NO_X standard will actually translate into 2.2–2.3 g/bhp-hr NO_X, not the 2.0 g/bhp-hr level applied in the California Federal Implementation Plan (FIP) to model year 2002 engines. These commenters also suggest that a PM standard of 0.05 g/bhp-hr be proposed, equal to the level which currently applies to urban buses.

The Agency believes that because of the close interaction among NO_X, NMHC, and PM emissions from diesel engines, decisions about proposed emission standards cannot be made independently from one another. As described below in section IV, EPA believes that reaching all the standards proposed today simultaneously will require a very large technological effort on the part of diesel HDE manufacturers. Based on the information available today, the Agency believes that the scale of the effort which will be required is such that if NO_X, NMHC, or PM standards lower than those proposed here were to be required, the feasibility of implementing the program for the 2004 model year would be threatened. That is, while manufacturers may be able to achieve lower emission levels for some engine models, at this time EPA does not believe that this would be feasible, on average, for the full line of engines manufacturers will likely be offering in 2004. (The technological assessment on which EPA based a 2.0 g/bhp-hr NO_X emission standard in the California Federal Implementation Plans assumed that only engines sold in California, not all engines nationally, would be affected.) Regarding a specific comment that a combined NO_X + NMHC standard allows NO_X emissions significantly higher than the 2.0 g/bhp-hr NO_X goal, the Agency accepts the intention of the engine industry to reach levels very close to 2.0 g/bhp-hr. This also seems likely from a technical perspective since at best modest NMHC reductions can be achieved over current levels. By combining the NO_X standard with NMHC, EPA proposes to allow a small degree of flexibility to manufacturers which succeed in achieving very low NMHC levels in conjunction with the proposed NO_X and PM standards. However, the Agency does not expect that the opportunity to take advantage of that flexibility will be frequently used and expects that on average in-use NO_X levels would be approximately 2 g/BHP-hr.

As is the case for NMHC, for many in-cylinder control strategies there is a trade-off between NO_X and PM emission rates. In-cylinder techniques which reduce NO_X may increase PM and vice-versa. For HDDEs, EPA expects that most manufacturers will rely on in-cylinder NO_X control techniques as opposed to aftertreatment devices. Some of these techniques are likely to put upward pressure on PM levels, and thus will require special optimization to ensure that PM levels are not increased. A simultaneous reduction in the PM standard could have an adverse effect on the feasibility of the NMHC + NO_X standard. Nonetheless, EPA recognizes the need for and value of additional reductions in PM emission rates and asks for comments on this matter.

EPA encourages further, detailed comment on the appropriateness of the proposed levels for NMHC + NO_X and PM in light of the technological interactions of their formation and control. EPA will consider finalizing standards different than those proposed today to the degree that comments and analysis support such action. However, the interactions among the pollutants would require a reassessment of all pollutants if a more stringent standard is to be considered for any one pollutant.

One commenter requested that EPA propose voluntary low emission standards for NO_X and PM which would apply between 1998 and 2003 at levels below the 4.0 g/bhp-hr NO_X and 0.10 g/bhp-hr PM which would be required in 2004. The ultimate purchasers of HDEs certified to meet the voluntary low emission standards would be able to market the emission credits generated. EPA asks for comment on the need for and desirability of lower voluntary NO_X and PM standards as a means to encourage technological innovation and the value of such a program given that manufacturers can already elect to certify to lower standards (family emission limits) under the Averaging, Banking, and Trading (A,B,&T) program. These extra emission reductions from these HDEs could be sold for marketable credits provided there is not double counting between the A,B,&T program and a user program.

Commenters also raised the issue of whether standards for otto-cycle HDEs (gasoline-fueled) should be different, and more stringent, than those for diesel-cycle HDEs. As commenters observe, the technological challenge of achieving lower NO_X levels simultaneously with low NMHC levels has been less for otto- than diesel-cycle HDEs in the past and current data suggests this may be the case for the proposed 2004 standards. In 1996 there were seven otto-cycle HDE families that certified to the existing standards with combined NMHC+NO_X levels below the level of the proposed NMHC+NO_X standard. However, of these seven, only about half had actual test data to demonstrate emission levels which could allow them to certify to the level of the proposed standards. Durability test data on others indicates that they would be unable to meet a 2.4 g/BHP-hr NMHC+NO_X standard at the end of their useful life period.

Lower certification levels for some families does not necessarily lead to the conclusion that levels significantly less than the proposed standards are achievable by all families in the near term. Indeed, the industry has raised concern that even if the level of the proposed standard can be achieved on laboratory prototypes in the near term, some engine models will require additional work to gain the additional emission reductions needed to account for the effects of production and test variability and the deterioration in the efficiency of emission controls in use. Industry has suggested that a prototype engine emission rate about 1 g/BHP-hr less than the proposed standard is needed to be assured of compliance by production engines.

Nonetheless, the recent engine and emission control system improvements and the resultant reduction in the NMHC+NO_X emission levels of many of the current otto-cycle families clearly indicate that the proposed standards are feasible by the 2004 model year. Some concern has been expressed that the proposed standard may be more difficult for otto-cycle engines used in heavier vehicles (>14,000 lbs GVWR). If not formulated properly, the efficiency of their catalysts may be reduced by heat stress which occurs during the longer periods of high load operation which are characteristic of some of these vehicles. However, the fact that otto-cycle HDEs with these lower emission rates are used in vehicles of all weight classes suggests that vehicle design and use patterns do not govern the feasibility of low NO_X catalyst technology. EPA believes that any technological feasibility concerns for otto-cycle HDE families required to meet the proposed standard can be resolved within the next eight years.

Given the relatively low NMHC+NO_X certification levels of some current otto-cycle engines and the available leadtime, EPA requests comment on setting the NMHC+NO_X standard for otto-cycle engines in the range of 1.5–2.0 g/BHP-hr. In addition to comments on technological feasibility, EPA requests comment on the appropriateness of a lower standard in the context of emission inventory benefits, environmental need, costs of compliance (purchase and operating), energy impact, safety, and market equity concerns. Comments regarding market equity should address how different levels of NMHC+NO_X standards for otto- and diesel-cycle engines would affect the market relationship between these technologies. EPA also requests comment on whether implementing a separate standard for otto-cycle engines (which are largely gasoline-fueled engines) would be an appropriate change from the historical ''fuel neutral'' nature of EPA's emission standards for NMHC and NO_X emissions from HDEs, and whether such a change could adversely affect the development of and use of clean alternative fuels.

EPA also requests comment on another alternative approach for otto-cycle engines. Under this approach, manufacturers could voluntarily elect to certify these engines to the proposed standard significantly earlier (i.e., model year 1999, 2000, or 2001 instead of 2004) as an alternative to meeting the more stringent standard discussed above (1.5–2.0 g/bhp-hr) in 2004. In this concept, the more stringent 2004 standard for otto-cycle engines either would not apply or would apply to a model year after 2004 to a manufacturer that elected to meet the proposed standard early. This approach would have the benefit of providing early emission reductions and, to the extent that manufacturers choose the proposed standard early, would help reduce the potential market equity impacts mentioned above since the same standard would apply to both otto- and diesel-cycle engines. While EPA may not impose on highway heavy-duty engines NO_X standards more stringent than 4.0 g/bhp-hr for any model year before 2004 (CAA sections 202(b)(1)(C) and (a)(3)(B)(ii)), EPA believes it retains authority to offer manufacturers the voluntary option of complying with a NO_X plus NMHC standard of 2.4 g/bhp-hr beginning before model year 2004. EPA requests comment on the appropriateness of finalizing this concept. Should a commenter favor this concept, they should specify the version they prefer (i.e., implementation date of the 2.4 g/BHP-hr standard or implementation date and numerical value of a later more stringent standard. EPA seeks comment on the technical feasibility and appropriateness in the context of environmental need, costs of compliance, energy impact, safety and market equity for the option supported. The public docket contains a memo further discussing each of the alternative approaches to otto-cycle HDE standards as laid out above.

Finally, several commenters encouraged EPA to reconsider the role of alternative fuel technologies in reaching low emission levels. EPA believes HDE technologies using alternative fuels can reach or exceed the emission standards proposed today. For this reason, EPA has for many years supported, and continues to support, expanded use of optimized alternative fuel engines. The Agency is pleased that development of HDEs which use alternative fuels is continuing and that some of these engines have been marketed, usually for specialized purposes. However, it does not appear that a major shift in the market toward alternative fuel HDEs is underway, and EPA does not believe at this time that the HDE manufacturing industry is in a position to shift a significant amount of its production toward non-petroleum fuels by the year 2004. Thus, EPA believes it is likely that petroleum-fueled HDEs will continue to dominate the HDE industry well into the next century, and the Agency does not believe that EPA action that could theoretically force a faster shift toward alternative fuel technologies (e.g., extremely low emission requirements for all engines) would be effective in the absence of a strong market demand for such engines.

Therefore, the Agency believes that it is appropriate to base new proposed HDE emission standards on the projected capabilities of petroleum-fueled engines rather than on the current or projected capabilities of alternative fuel engine technologies. If the stringent standards proposed today, while achievable by petroleum-fueled engines, are indeed relatively easy for some alternative fueled engines to meet, the result may be the introduction of alternative fueled HDEs that are both acceptable to the market and priced competitively. From the Agency's perspective, such a market-based promotion of alternative fuel technologies would be a positive result of today's proposed action.

d. Non-conformance Penalties. Section 206(g) of the Clean Air Act requires EPA to allow an HDE manufacturer to receive a certificate of compliance for an engine family which exceeds the applicable standard (but does not exceed an upper limit) if the manufacturer pays a non-conformance penalty established by EPA through rulemaking. The NCP program established through rulemaking is codified in Subpart L of 40 CFR 86. EPA plans to address provisions related to NCPs for the proposed 2004 model year standards in conjunction with the 1999 review discussed above.

2. In-use Emissions Control Elements

a. Introduction. Historically, EPA has viewed in-use emissions deterioration as a problem associated more with gasoline engines than with diesel engines. For NO_X emissions, EPA has tended to be less concerned with diesel engine emissions deterioration because diesels are currently equipped with fewer aftertreatment or other emission control devices susceptible to in-use degradation. Diesel engine emissions standards have historically been met mainly through overall improvements to the engine and fuel system. These improvements have resulted in improved performance, fuel economy, and durability as well.

As described below in Section IV. A., as standards are reduced diesel HDE manufacturers will likely continue to strive to meet the standards through engine, air intake, and fuel systems redesign. However, they may find it necessary to introduce new technologies, such as exhaust gas recirculation (EGR), which function solely to reduce emissions. Long-term emissions performance becomes a

greater concern with the addition of such emissions control technologies. The controls may not function as long as the engines and there may be little incentive for vehicle owners to conduct the repairs on these items needed to ensure emissions control during the very long life of the engines. This is of particular concern because the heavy-duty engine market has demanded longer-lasting engines, and manufacturers have been successful in increasing engine life. It is EPA's understanding that some current large engines accumulate in excess of 500,000 miles before being rebuilt and are used for several hundred thousand more miles after rebuild. Thus, failure of emissions controls early in the engine's life could offset a significant portion of the expected benefit associated with the more stringent standards proposed today.

As described below, EPA is proposing revisions to its current regulations regarding in-use emissions control including changes to useful life, emissions related maintenance and warranty provisions. These changes are intended as updates to current requirements which will further encourage engine manufacturers to use emissions controls that will have a high degree of durability, and that perform well in use without an unreasonable degree of owner involvement. EPA is also proposing other basic provisions to help encourage the maintenance and repair of emissions controls after the regulatory useful life is reached, and especially during engine rebuild. The proposals would be effective beginning with 2004 model year engines. EPA believes that the industry is fully capable of responding to the challenge of achieving the benefits of low emissions standards, not just in the early years of engine life, but throughout the time that the engine is in-use. EPA requests detailed comments, with as much supporting rationale as possible, on all of the following proposals.

b. Revisions to Current Regulations

To help ensure the durability of new emissions related technology used to meet the new standards, EPA is proposing revisions to its current regulations in the areas of ''useful life'', ''emissions related maintenance'', and ''emission defect and performance warranties''.

i. Useful life

As provided in section 202 of the Clean Air Act, EPA specifies the ''useful life'' periods for the various heavy-duty engine types. The regulatory useful life is the period of time or operation during which manufacturers are liable for emissions compliance. Manufacturers are responsible for making sure their engines meet emissions standards not just at the time of certification and production but also for the regulatory useful life of the engines. EPA has the authority to test engines selected from the production line and from the in-use fleet to determine compliance with this requirement. EPA can require manufacturers to recall and repair engines in an engine family if testing of properly maintained and used engines or other information indicates that a substantial number of engines in the engine family do not meet emissions standards during the useful life. EPA's ongoing programs for production-line auditing (Selective Enforcement Auditing) and in-use recall are two primary EPA enforcement mechanisms for engine emissions standards. The statutory authority for these programs is found in Sections 206 and 207 of the Clean Air Act.

Currently for heavy-duty on-highway engines, the useful life is generally defined as eight years or 110,000 miles for light heavy-duty diesel engines (HDDEs) and gasoline heavy-duty engines, eight years or 185,000 miles for medium HDDEs, and eight years or 290,000 miles for heavy HDDEs, whichever comes first.[31] These mileage values were originally chosen to roughly correspond to the prevailing average engine lives before retirement (for smaller engines) or major engine rebuilds (for larger engines). Since the middle 1980s, manufacturers have increased very significantly the mechanical durability of heavy-duty diesel engines, allowing the engines to go many more miles before rebuild. Also, the annual vehicle miles travelled (VMT) for newer line-haul trucks has increased which results in the trucks reaching the end of their defined useful life more quickly. It is not uncommon for line haul trucks to reach their current maximum useful life of 290,000 miles well before the years useful life interval.

The first part of the following discussion concerns the mileage portion of the useful life. The years useful life interval is much less critical because it is not generally the limiting interval. EPA is proposing to make the years portion consistent at ten years for all heavy-duty engines and standards beginning with the 2004 model year. The discussion of the years interval proposal follows the proposals and discussion regarding mileage.

The engines of greatest concern to EPA are those in the heavy heavy-duty diesel engine category because they, for the most part, are the engines that tend to reach the end of the useful life quickly and then continue to accumulate many more miles than the current useful life before needing to be rebuilt. Published warranty information indicates that the major engine components of heavy HDDEs are warranted for 500,000 miles in most cases and extended base engine coverage is often available for up to 5 years/500,000 miles. Since the repair or replacement of some of the components covered by the warranties due to wear is fundamental to rebuilding, the warranties are one good indication that some engines greatly exceed EPA's current useful life miles limit of 290,000 miles. Also, it is commonly accepted in the trucking industry that, with sound maintenance practices, today's heavy HDDEs last much longer than 290,000 miles before rebuild.[32]

Although EPA could perhaps justify proposing an increase of the heavy HDDE useful life requirement to 500,000 miles or more based on how long engines are lasting today before rebuild, EPA believes that a somewhat lower value is appropriate. Engine manufacturers have stated that they will be challenged to meet the proposed new standards and an extremely long useful life could affect the feasibility of the 2004 standards. EPA acknowledges that the length of the useful life can affect the feasibility of the standards. EPA believes that the program goal of ensuring durable emissions control designs would be achieved through a 50 percent increase in the useful life up to 435,000 miles. This value represents a meaningful increase in the useful life without potentially compromising the feasibility or cost effectiveness of the 2004 standards. Additionally, other programs, as described below, can help ensure emissions controls continue to operate properly after the end of the useful life. The end of the useful life does not necessarily mean the end of good in-use emissions performance.

Not all heavy HDDEs are used in line-haul trucks which accumulate miles very quickly. A small minority of heavy

[31] 40 CFR 86.096–2. The Clean Air Act Amendments of 1990 specify a minimum useful life years limit of ten years for heavy-duty engines with respect to any standard that first becomes applicable after the 1990 amendments were enacted. 42 U.S.C. 7521 (d)(2). Standards adopted after the Amendments such as the urban bus particulate standard and the 1998 and later model year NO_X standard have a useful life years limit of ten years (e.g., 40 CFR 86.098–2). Standards adopted before the Clean Air Act Amendments of 1990 have a useful life years limit of eight years.

[32] Comments of American Trucking Association, Inc., October 17, 1995, Docket A–95–27, II–D–40.

HDDEs are used in urban (transit) buses and other urban vehicles that accumulate miles much more slowly. For example, urban buses average about 13 miles per hour (including idle time)[33] and about 40,000 miles per year.[34] For urban vehicles such as urban buses, a useful life of 435,000 miles would be excessive because of their slow mileage accumulation rates. EPA has addressed such concerns in other regulations by adopting an hours limit that is equivalent to a miles limit which is set to reflect typical operation of heavy-duty engines. Vehicles that accumulate mileage more slowly than typical for heavy-duty vehicles would reach the hours interval before the mileage interval. In keeping with this approach, EPA proposes to add an hours limit of 13,000 hours to the useful life for heavy HDDEs. The 13,000 hours limit is based on other hours and miles equivalents used in existing EPA regulations regarding heavy-duty engines.[35]

EPA, however, is concerned that the hours interval being proposed could, in effect, relax the useful life from its current level, as would be the case in instances when vehicles would reach 13,000 hours before reaching 290,000 miles. Given the average speed for urban buses of 13 miles per hour, this would be likely to occur frequently. To ensure that the addition of an hours limit does not result in a useful life less than the current useful life in any instance, EPA proposes not to allow the hours limit to be effective until after an engine reaches 290,000 miles. In summary, EPA proposes a useful life for heavy HDDEs of 435,000 miles, 13,000 hours, or ten years, whichever occurs first, but in no case less than 290,000 miles.

EPA requests comments on two alternative approaches to adopting an hours limit of 13,000 hours. The first option is to not have an hours interval and retain the useful life mileage interval of 290,000 miles for urban bus engines with an increase of the mileage interval to 435,000 miles for all other heavy HDDEs. This would simplify regulations but could disadvantage engine manufacturers where engines are used in slow moving urban vehicles other than urban buses, such as solid waste haulers. The second option is to set the hours interval to be equivalent to the number of hours it takes an urban bus, on average, to accumulate 290,000 miles. Using the 13 miles per hour estimate from above, the hours interval would be 22,300 hours. With this second option, EPA also requests comments on whether or not a minimum useful life of 290,000 miles is appropriate. These two alternatives may work well for urban buses but may not be as appropriate for other urban heavy-duty vehicles.

Currently the years component of the useful life is eight years for some standards and ten years for others depending on whether the standards were adopted before or after the Clean Air Act Amendments of 1990. Standards promulgated after the Clean Air Act Amendments, such as the 1998 4.0 g/bhp-hr NO_X standard, are required to have a useful life years limit of 10 years. EPA proposes to make the useful life years limits consistent for all pollutants and for all heavy-duty engines by raising the years component of the useful life so that it is ten years in all cases. The change affects the carbon monoxide and particulate matter standards (except the urban bus particulate standards which are already at ten years). EPA regards this change as a simplification of the regulations with very little or no impact on the stringency of the standards because EPA believes that vehicles will reach the mileage limits before the years limits in almost all cases.

EPA requests comments on the appropriateness of the useful life proposals described above. In particular, EPA seeks comments on the appropriateness of the 435,000 mileage limit, the appropriateness of treating engines used in urban vehicles differently from other heavy HDDEs, and the appropriateness of the proposed 13,000 hour limit.

ii. Emissions-Related Maintenance

The frequency of emission-related maintenance actions that manufacturers require owners to perform as a condition of their emissions warranties is another issue that affects the actual in-use emission performance of engines. If such required maintenance is more than the vehicle owner is likely to perform due to cost or inconvenience, then in-use emissions deterioration can result. Therefore, EPA currently imposes limits on the frequency of maintenance that can be required of HDE owners for emissions related items. These limits also apply to the engine manufacturer during engine certification and durability testing. The requirements currently apply for the useful life of the engine. Table 2 summarizes current regulations regarding the mileage interval limitations for the maintenance manufacturers may specify on certain emissions-related items for heavy-duty diesel engines (HDDEs). Engine manufacturers cannot require maintenance to be performed any more often than is noted in the table but may specify longer periods. The intervals are in miles or hours, whichever occurs first.

TABLE 2.—CURRENT INTERVALS FOR EMISSION-RELATED MAINTENANCE [1]

50,000 miles or 1,500 hours for all heavy duty diesel engines (HDDEs).	100,000 miles or 3,000 hours for Light HDDEs.	150,000 miles or 4,500 hours for Medium and Heavy HDDEs.	None listed.
EGR systems including all related filters and control valves [2].	Turbocharger	Turbocharger	Catalytic converter.[2]
PCV valve [2]	Fuel injectors	Fuel injectors	
Fuel injector tip cleaning	Electronic engine control unit, sensors, and actuators [2].	Electronic engine control unit, sensors, and actuators [2].	
	Particulate trap [2]	Particulate trap [2]	

[1] Source 40 CFR 86.094–25.
[2] Critical emissions-related components.

Table 2 notes components that EPA considers ''critical emissions-related components'' and EPA has additional requirements for these components (see 40 CFR 86.094–25 (b) (6)). Specifically, manufacturers must show that

[33] ''National Transit Summaries and Trends For the 1993 National Transit Database Section 15 Report'', Federal Transit Administration, May 1995.

[34] ''Data Tables For the National Transit Database Section 15 Report Year'', Federal Transit Administration, December 1994.

[35] 40 CFR 86.094–25 (b)(4) contains several hours and miles equivalents for HDDEs all of which are based on the ratio of one hour to 33.3 miles of operation.

maintenance which the manufacturer requires for a critical emission-related component has a reasonable likelihood of being performed by the operator in use. The engine manufacturer has a variety of options for making such a demonstration such as showing that component degradation will also cause vehicle performance to degrade or by using visual displays to notify the driver that maintenance is needed.

EPA believes that revising the maintenance intervals for certain technologies is appropriate in order to adequately cover the technologies which manufacturers may use to meet the proposed 2004 and later model year standards. The new standards may prompt the use of EGR on heavy-duty diesel engines and an increased interval for EGR valves and tubing will help ensure adequate system durability. Similarly, EPA believes that catalytic converters should be added to the list of emission-related components for HDDEs for which a minimum interval is specified, also to ensure adequate durability. Except for the recent use of catalytic converters for particulate control, neither technology has been used significantly for HDDEs in the past. Accordingly, EPA proposes for EGR valves and tubing and catalytic converters that manufacturers specify maintenance no more often than the intervals shown in Table 2 for other technologies; 100,000 miles or 3,000 hours, whichever occurs first, for light HDDEs and 150,000 miles or 4,500 hours for medium and heavy HDDEs. For EGR system filters and coolers, EPA proposes that the maintenance interval would remain 50,000 miles/1,500 hours due to manufacturer concerns that a longer interval for these components may not be feasible.

In addition, there is the possibility that new technologies not listed in Table 2 could be used to meet the proposed standards. Therefore, EPA proposes to apply the same maintenance intervals as listed above for most components, 100,000 miles or 3,000 hours, whichever occurs first, for light HDDEs and 150,000 miles or 4,500 hours for medium and heavy HDDE, to any additional add-on emissions-related components that manufacturers introduce in the future. EPA proposes to define add-on emission-related components for this purpose as components whose sole or primary purpose is to reduce emissions or whose failure will significantly degrade emissions control and whose function is not integral to the design or performance of the engine. EPA would also consider such components critical emission-related components for purposes of 40 CFR 86.094–25(b)(6). EPA believes that this proposal is necessary to provide the same minimum level of durability for all emissions-related components (except EGR filters and coolers) used to meet the standards. The minimum requirement will also be helpful in the development of future technologies as it will provide a clear minimum design target for technology development.

Maintenance requirements for gasoline-fueled heavy-duty engines and light heavy-duty diesel engines are currently the same for EGR and several other components due to the similarity in their duty cycles. EPA believes that it is appropriate for the maintenance intervals for EGR for light heavy-duty diesel engines and heavy-duty gasoline engine to remain consistent with each other given this similarity. Therefore, for otto-cycle (i.e., gasoline-fueled) heavy-duty engines, EPA proposes that the maintenance interval for EGR valves and tubing be increased to 100,000 miles or 3,000 hours from the current 50,000 mile or 1,500 hour interval. Because gasoline-fueled engines emit less particulate (which can cause deterioration of the EGR system) than do diesel engines, EPA does not believe that the change represents a particular challenge for gasoline-fueled engines.

EPA requests comments on the proposed changes to the maintenance intervals described above including comments on the length of the intervals and the technologies for which intervals are being proposed. Also, EPA requests comment on the definition of ''add-on emission-related component'' offered here.

iii. Emissions Defect and Performance Warranties

Emissions warranties are provided by manufacturers as required under Section 207 of the Clean Air Act. The performance warranty provides that if a properly maintained vehicle or engine fails to conform to EPA emissions requirements at anytime during the warranty period, and such nonconformity causes the owner to have to bear a penalty or other sanction, then the engine manufacturer is responsible for remedying the nonconformity at its own cost.[36] The defect warranty provides that manufacturers are responsible for defects in materials and workmanship which cause an engine not to conform with applicable regulations. EPA currently requires that the emission defect and emission performance warranties for heavy-duty gasoline engines and light HDDEs last 5 years/50,000 miles and for medium and heavy HDDEs last 5 years/100,000 miles, whichever occurs first, but in no case may the warranty period be less than the manufacturer's basic mechanical warranty period for the engine family.[37]

EPA proposes to clarify that the period of the warranty is to be in no case less than the basic mechanical warranty period that the manufacturer provides to the purchaser with the engine rather than the general warranty period for the engine family. It is common for manufacturers to provide negotiated mechanical warranties that are longer than the published base warranties for the engine family. EPA believes that this modification is appropriate because negotiated warranties are prevalent and therefore the published warranty is not reflective of the true mechanical warranty period in many cases. EPA requests comments on this proposal.

c. Maintenance and Repair of Emissions Controls After the End of the Useful Life

As discussed above, EPA regulates maintenance and repairs of emissions control components that manufacturers may specify during the useful life of the engines. However, these provisions will not ensure emissions control for the full operating life of all heavy-duty engines. Large diesel engines have an extremely long life that is extended through rebuilding. If the vehicle owner and engine rebuilder were to not properly maintain or repair emissions control components, the controls could degrade and cause an unacceptable increase in emissions. Because there may be no effect on engine performance, the degraded components may otherwise go unnoticed for a significant portion of the total life of the engine. Since HDEs are typically rebuilt, EPA also believes it is appropriate to take steps to ensure that emissions-related components used to meet the new standards receive all needed maintenance and repair beyond the useful life period. The proposals described below fall into two categories: manufacturer requirements and engine rebuilding requirements. The proposals are intended to help enhance the focus on emissions-related components and the Agency does not believe that the proposals will result in significant costs above those that would be incurred for

[36] While EPA is proposing to revise the performance warranty period as discussed below, in accordance with Section 207(i) of the Clean Air Act, EPA has not prescribed regulations under Section 207(b)(2) of the Act which require heavy-duty engine manufacturers to provide performance warranties.

[37] Useful life definition paragraph (6), 40 CFR Part 86.096–2.

the proper maintenance/repair of emissions-related components. As with the related provisions proposed above, EPA believes that these basic provisions are necessary beginning with the 2004 model year because new add-on emissions-related components which may require occasional maintenance and repair may be used to meet the 2004 and later model year standards.

i. Provisions Affecting Manufacturers

Manufacturers currently provide owners with comprehensive service/maintenance manuals covering the maintenance necessary to keep engines operating properly. If a manufacturer required maintenance on any emissions-related components during the useful life, as described above in 2.b.ii. of this section, maintenance procedures would be detailed in this manual. EPA proposes to require that manufacturers, in addition, include in the manual maintenance needed for emissions related components after the end of the regulatory useful life, including mileage/hours intervals and procedures to determine whether maintenance or repair is needed. The recommended practices must also include instructions for accessing and responding to any emissions-related diagnostic codes that may be stored in on-board monitoring systems. The recommended maintenance practices would be based on engineering analysis or other sound technical rationale. In the event that an emission-related component is designed not to need maintenance during the full life of the vehicle, the manual would need to contain at a minimum a description of the component noting its purpose and a statement that the component is expected to last the life of the vehicle without maintenance or repair. In addition, manufacturers would be required to highlight in the manual any rebuild provisions adopted by the Agency, as described in 2.c.ii. below, to ensure that owners and rebuilders are aware of the requirements.

As described above in 2.b.ii. of this section, manufacturers must ensure that critical emissions-related scheduled maintenance has a reasonable likelihood of being performed in-use. Manufacturers may elect to provide such assurance by using some form of on-board driver notification when maintenance is needed on a critical emission related component.[38] The signal may be triggered either based on mileage intervals or component failure. It is currently considered a violation of the Clean Air Act's prohibition on tampering (Section 203(a)(3)) to disable or reset the signal without also performing the indicated maintenance procedure.[39]

EPA proposes to require that manufacturers electing to use such signal systems to ensure that critical emissions-related maintenance has a reasonable likelihood of being performed must design the systems so that they do not cease to function at or beyond the end of the regulatory useful life. For example, if the signal is designed to be actuated based on mileage intervals, it would have to be designed to continue to signal the driver at the same intervals after the end of the useful life. EPA does not propose, however, to hold the manufacturer responsible or liable for recall due to signal failure in instances where the signal fails to function as designed beyond the end of the useful life. Manufacturer recall liability is limited to failures during the regulatory useful life under Section 207 of the Clean Air Act. (The manufacturer is also not responsible for repairs when the signal does function after the end of the useful life unless such repairs are covered by the emission warranty provided as described above in 2.b.ii.)

EPA believes these proposals will help ensure that information necessary to care for critical emission related components through the engines' entire life on the road will be widely available to owners, rebuilders and others maintaining and repairing heavy-duty engines. EPA requests comments on the proposals.

ii. Provisions Pertaining to Engine Rebuilding Practices

EPA has two concerns regarding the rebuilding of 2004 and later model year engines, both related to new emissions related components that may be added to the engine to meet the new standards. First, EPA is concerned that during engine rebuilding, there may not be an incentive to check and repair emissions controls that do not affect engine performance. Second, EPA is concerned that there may be an incentive to rebuild engines to a pre-2004 model year configuration due to real or perceived performance penalties associated with 2004 and later model year technologies. Such practices would likely result in a loss of emissions control.

EPA currently does not have regulations concerning engine rebuilding practices for heavy-duty engines other than requirements for engines used in 1993 and earlier model year urban buses.[40] Clean Air Act Section 202(a)(3)(D) directed EPA to study heavy-duty engine rebuild practices and the impact rebuilding has on engine emissions. Based on the study and other information, EPA may prescribe requirements to control rebuilding practices (whether or not the engine is past its useful life), which in the Administrator's judgement cause, or contribute to, air pollution which may reasonably be anticipated to endanger public health or welfare taking costs into account. 42 U.S.C. 7521 (a)(3)(D). EPA conducted a study of engine rebuilding and determined that current-technology engines, when rebuilt, generally emit at levels near or below the certification standards that applied to the engine when new and that regulations to control rebuild practices did not appear to be warranted at that time.[41]

In the ANPRM, EPA requested comments on establishing rebuild requirements to promote continued in-use compliance for 2004 and later model year engines. The Automotive Engine Rebuilders Association (AERA) and other related associations stated in their comments on the ANPRM that it is extremely unlikely that engine rebuilders would rebuild to non-original specifications because such a product would not be acceptable to the purchaser.[42] AERA further commented that a rebuild program where the rebuilder would be required to conduct certification testing and be held liable for emissions performance in-use would be unreasonable for the many rebuilders that are small businesses. AERA commented that, given what is known about the rebuilding industry, EPA has no basis for rebuild regulations.

EPA does not believe that a major program placing substantial new requirements on the rebuilding industry needs to be proposed at this time to adequately address the Agency's concerns described above, based on comments received and EPA's findings regarding current industry practices. Therefore, EPA does not propose regulations at this time under the authority of Clean Air Act Section 202(a)(3)(D). However, EPA does believe that establishing basic regulatory provisions regarding engine rebuilding under Section 203 of the Clean Air Act (''Prohibited Acts'') would help the rebuilding industry understand what is needed to ensure that rebuilt 2004 and

[38] 40 CFR 86.094–25(b)(6)(ii)(C)

[39] 40 CFR 86.094–25(b)(6)(iii)

[40] 40 CFR Part 85, Subpart O, Urban Bus Rebuild Requirements.

[41] ''Heavy-duty Engine Rebuilding Practices,'' EPA Final Report by Tom Stricker and Karl Simon, March 21, 1995.

[42] EPA Docket A–95–27, Docket II-D–41.

later model year engines closely approximate original emissions performance when they are rebuilt.

Clean Air Act Section 203(a)(3) states that it is prohibited for ''any person to remove or render inoperative any device or element of design installed on or in a motor vehicle or motor vehicle engine'' in compliance with regulations, either before or after its sale and delivery to the ultimate purchaser. 42 U.S.C. 7522 (a)(3)(A). EPA commonly refers to violations of this provision of the Clean Air Act as tampering. Engine rebuilding practices are currently addressed in general terms under EPA policies established under Clean Air Act Section 203(a)(3) regarding tampering. The Agency has established a policy that when switching heavy-duty engines the new engine must be ''identical to a certified configuration of a heavy-duty engine of the same or newer model year''.[43] EPA has also established policies regarding the use of aftermarket parts during rebuild.[44]

EPA is proposing to codify these policies as they apply to rebuilding and to propose new measures. The Agency believes that rebuilding is currently a time when emissions control is restored, along with the engine itself, and that the proposed provisions described below will help ensure that this continues for the 2004 and later model year engines. Currently, the engine and all emissions related components are treated as a package for purposes of engine certification and other programs and EPA believes it is important to maintain this view at time of engine rebuild. The provisions proposed below would specify what minimum action is necessary at time of rebuild under Clean Air Act Section 203(a)(3) to ensure continued emissions control.[45] These provisions reflect what EPA believes will be common practice for rebuilding engines, but also will help to focus attention on new emission-related components used to meet the 2004 standards.

EPA proposes that parties involved in the process of rebuilding or remanufacturing engines (which may include the removal of the engine, rebuilding, assembly, reinstallation and other acts associated with engine rebuilding) must follow the provisions described below to avoid tampering with the engine and its emissions controls.

(1) During engine rebuilding, parties involved must have a reasonable technical basis for knowing that the rebuilt engine is equivalent, from an emissions standpoint, to a certified configuration (i.e., tolerances, calibrations, specifications) of the same or newer model year as the engine being rebuilt. A reasonable basis would exist if:

(a) Parts used when rebuilding an engine, whether the part is new, used, or rebuilt, is such that a person familiar with the design and function of motor vehicle engines would reasonably believe that the part performs the same function with respect to emissions control as the original part, *and* (b) Any parameter adjustment or design element change is made only (i) in accordance with the original engine manufacturer's instructions or (ii) where data or other reasonable technical basis exists that such parameter adjustment or design element change, when performed on the engine or similar engines, is not expected to adversely affect in-use emissions.

(2) A replacement engine must be of (or rebuilt to) a configuration of the same or later model year as the original engine. Thus, in addition, under the proposed regulations a party supplying a rebuilt engine would be prohibited from supplying a replacement engine that is not rebuilt to a configuration of the same or later model year as the trade-in engine.

(3) At the time of rebuild, emissions-related codes or signals from on-board monitoring systems may not be erased or reset without diagnosing and responding appropriately to the diagnostic codes, regardless of whether the systems are installed to satisfy EPA requirements under 40 CFR 86.094–25 or for other reasons and regardless of form or interface. Diagnostic systems must be free of all such codes when the rebuilt engines are returned to service. Further, such signals may not be rendered inoperative during the rebuilding process.

(4) When conducting an in-frame rebuild or the installation of a rebuilt engine, all emissions-related components not otherwise addressed by the above provisions must be checked and cleaned, repaired, or replaced where necessary, following manufacturer recommended practices.

EPA proposes that any person or entity engaged in the process, in whole or in part, of rebuilding engines who fails to comply with the above provisions may be liable for tampering in violation of CAA Section 203(a)(3). Parties would be responsible for the activities over which they have control and as such there may be more than one responsible party for a single engine in cases where different parties perform different tasks during the engine rebuilding process (e.g., engine rebuild, full engine assembly, installation). EPA is proposing no certification, recordkeeping, or other requirements of the rebuilder or engine owner and there would be no in-use emissions requirements.

Because the above proposal represents what EPA believes would be sound rebuilding practices for 2004 and later model year engines, EPA does not believe that there are costs associated with the above proposed requirements. Items 1 and 2 of the proposal closely reflect established EPA policy regarding tampering (discussed above). Any changes to rebuild practices will be due to the industry adjusting to the use of new technologies. EPA believes that any added cost to the rebuilding of the engines will be due to the technology used to meet the standards and not due to the rebuilding provisions being proposed. Additionally, EPA continues to have the authority to regulate rebuilding if future studies or other information were to provide the basis for such regulations. EPA views the proposal above as preventative, in that it will help ensure that the rebuild industry is aware of the new technologies and that rebuilding of engines with 2004 and later technology will not impact emissions negatively. EPA requests comments on all aspects of the above proposal.

To ensure that engine rebuilders and others involved in engine rebuilding are complying with the requirements and to maintain a level playing field between those who follow the rules and those who do not, EPA's enforcement office intends to take action against violations of the rebuild provisions. EPA is concerned, however, that proving violations will be difficult without some form of records available for inspection.

EPA is considering the adoption of minor recordkeeping requirements which EPA believes would be in line with customary business practices. The Agency would then be able to inspect such records to determine compliance with the rebuild provisions. The records would be required to be kept by persons involved in the process of heavy-duty engine rebuilding or remanufacturing and would have to include the mileage and/or hours at time of rebuild and a list of the work performed on the engine and related emission control systems including a list of replacement parts used, engine parameter adjustments, design element changes, emissions related codes and signals that are

[43] Engine Switching Fact Sheet, April 2, 1991. Docket A–95–27, II–B–6.

[44] ''Interim Tampering Enforcement Policy'', Mobile Source Enforcement Memorandum No. 1A., June 25, 1974. Docket A–95–27, II–B–5.

[45] Note that other actions not specified may also be prohibited under Clean Air Act Section 203.

responded to and reset and the response to the signals and codes, and work performed as described in item (4) of the rebuild provisions above. If it is customary practice to keep records for groups of engines where the engines are being rebuilt or remanufactured to an identical configuration, such recordkeeping practices would satisfy these requirements. EPA would require such records to be kept for two years after the engine is rebuilt.

EPA's intention with such record keeping requirements would be to make basic records available to the Agency such that enforcement officials would be able to understand what work was performed on an engine during the rebuild process. EPA believes that those in the rebuilding industry already keep detailed records on work performed on engines as part of good business practices and therefore, EPA believes that the above recordkeeping requirements would impose no additional burden on affected businesses. Moreover, EPA has always had the authority to request such records pursuant to section 208 of the Clean Air Act and the above requirements would only standardize the records available for EPA inspection. EPA requests comments on the above record keeping requirements.

d. State Inspection/Maintenance Programs

Many states are currently in various stages of planning or implementing inspection/maintenance (I/M) programs for trucks. The programs are mostly focused on identifying trucks with high smoke emissions, which usually result from tampering or poor maintenance, and requiring their repair. EPA has received requests from several sources including the American Trucking Association, the Engine Manufacturers Association, and state organizations to become involved in the development of truck I/M programs, with the hope that state programs can be standardized under EPA guidance. Currently, programs may differ widely from state-to-state causing a variety of problems for the parties affected.

In response, EPA has begun an effort in this area with the goal of developing a guidance document that states can use to establish programs. EPA intends to address issues regarding testing procedures and standards or pass/fail cut points for heavy-duty engine I/M programs in coordination with interested parties. Although the guidance document would not preclude states from designing programs differently, it should help decrease program differences from state-to-state.

3. Revised Averaging, Banking, and Trading Provisions

Today's proposal makes changes to the heavy-duty engine averaging, banking and trading (ABT) provisions. They are intended to enhance the flexibility offered to manufacturers in meeting the stringent standards being proposed and to encourage the early introduction of cleaner engines, thus securing emissions benefits earlier than would otherwise be the case. Further, the proposed ABT changes also allow EPA to propose more stringent emission standards than it otherwise might, since the flexibility provided by ABT lowers the costs to manufacturers and makes it easier to meet the technical challenges of lower standards.

Under a modified program proposed to be available to manufacturers between 1998 and 2006 inclusive, credits could be earned without the current ABT credit discounting or limited life provisions. These credits could be used beginning in model year 2004 to ease the impact of the new standards in their initial years of applicability. With the exception of a minor adjustment in how credit exchanges are conducted between families, other provisions of the existing ABT program would remain essentially unchanged, including prohibitions on cross subclass and cross combustion cycle ABT. A further description of the proposed changes, including provisions designed to safeguard against any potential adverse air quality impacts, is provided later in this section.

a. Overview of the Current Averaging, Banking and Trading Program

The proposed changes come in the context of the existing ABT program, the bulk of which was adopted in 1990. The existing program includes otto and diesel cycle HDEs fueled by petroleum (gasoline and diesel), gaseous fuels, and methanol (see 55 FR 30584, July 28, 1990 and 59 FR 43472, September 21, 1994), and is available for meeting applicable NO_X and particulate matter (PM) standards. The three aspects of ABT: averaging, banking and trading, are briefly described in the following paragraphs.

Within a given manufacturer's product line, averaging allows certification of one or more engine families at levels above the applicable emission standard (but below a set upper limit), provided their increased emissions are offset by those from one or more families certified below the same emission standard, such that the average emissions from all the manufacturer's families (weighted by horsepower and production) are at or below the level of the emission standard. Averaging results are calculated for each specific model year. The mechanism by which this is accomplished is certification of the engine family to a ''family emission limit'' (FEL) set by the manufacturer, which may be above or below the standard (an FEL above the standard may not exceed a prescribed upper limit specified in the ABT regulations). Once an engine family is certified to an FEL, that FEL becomes the enforceable limit used to determine compliance during assembly line and in-use compliance testing.

The second element of the current ABT program is banking. Banking gives the manufacturer generating the credits in one model year the option to defer their use until a later model year for averaging or trading. Under the current program, credits are discounted by 20 percent when banked and have a three year life. EPA believes banking promotes the development and early introduction of advanced emission control technology, which provides emission reduction benefits to the environment sooner than would otherwise occur. An incentive for early introduction arises because the banked credits can subsequently be used by the manufacturer to ease the compliance burden of new, more stringent, standards. For the same reasons, banking can promote the introduction and use of clean alternative-fueled engines.

The final element of the ABT program is trading. Since averaging is limited to a given manufacturer's own product line, the manufacturer must have two or more engine families within a given averaging set to participate in the program. This could limit the opportunities for smaller HDE manufacturers with more limited product lines to optimize their costs. Trading resolves this concern by allowing credit exchanges between manufacturers. Thus, averaging benefits can be extended to manufacturers who might not otherwise be able to participate due to their limited product lines. Trading can also be advantageous to larger manufacturers because extending the effective averaging set through trading can allow for overall optimization of cost across manufacturers.

Due to manufacturer equity and environmental impact concerns there are some limitations on credit exchanges in the existing ABT program. First, for diesel cycle engines, NO_X and PM credit exchanges are prohibited across the various subclasses (LHDDE,

MHDDE, HHDDE). Second, no credit exchanges are permitted between diesel-cycle and otto-cycle engines. Finally, cross fuel credit exchanges are permitted only within engines of the same basic combustion cycle and subclass. Details on these credit exchange restrictions, including the reasons for their existence, are discussed in the previously cited Federal Register notices.

b. Description of Proposed ABT Program Changes

As noted at the outset of this section, EPA is proposing two principal changes to the existing ABT program designed to temporarily remove the discounting and limited life of credits generated under current provisions. Behind these changes is the recognition that the proposed standards represent a major technological challenge to the industry. ABT provisions can ease the need to bring all engines into compliance in MY 2004 by allowing accumulated credits to be used, for example, to temporarily offset emissions from some particularly difficult to control engine line. Thus, the Agency can adopt new standards without the need to show that they can be met by all engines when first implemented. While the current ABT provisions were designed with these same general goals in mind, EPA believes that the nature of the challenge presented by today's proposed standards justifies efforts to increase the flexibility of the ABT program. The Agency wishes to maximize the flexibility and incentives for early introduction of technology which ABT offers. This will help insure that the proposed new standards will, in fact, be attainable for the manufacturers, and will be met at the lowest cost. It is also the case that the Agency has gained experience with the operation of its ABT program which gives it more confidence in being able to successfully modify the program in the face of this need.

The proposal being made today would establish a second, parallel, ABT program targeted specifically at helping manufacturers meet the proposed more stringent standards in MY 2004 through 2006, the first three model years to which the new standards would apply. Credits could be earned under this program beginning in 1998 and would not be discounted, nor would they expire after 3 years as do current ABT credits. These credits could only be used to comply with the 2004 standards. If a manufacturer wished to apply them to its compliance program for earlier model years they could be transferred into the original ABT program, but would at the same time become subject to the 20 percent discount and three year life of the original program. EPA is also proposing that this alternate program would be in effect only for the years immediately surrounding the transition to the new standards. The ability to generate credits under the proposed new program would be eliminated in 2007 (the current ABT program would be available for 2007 and later model years). EPA thinks the need for unlimited life and no credit discounting to enhance the technological feasibility of the standards would be greatly diminished after the first three years of the model year 2004 standards. EPA believes it is appropriate to remove the discounting and limited life restrictions in the modified ABT program and still keep them in the current ABT program because these modifications have been considered in developing the proposed standards, but not prior standards subject to the ABT program. The Agency seeks comment on what expiration date, if any, would be appropriate for the proposed program modifications and why.

As in the current ABT program, only NO_X and PM credits could be earned under the modified program. NMHC credits would not be included because of the potential for windfall credit generation from the very low NMHC levels of many current engines. NO_X-only credit generation also allows the credits to be transferred back to the current program if deemed necessary by the manufacturer. The NO_X credits would be applied against the NO_X + NMHC standards beginning in 2004 (but not the NMHC cap associated with the 2.5 g/bhp-hr optional standard).

EPA proposes that the upper limits for engine families certified above the 2004 standard and using offsetting ABT credits would be 4.5 g/bhp-hr, NO_X + NMHC and 0.25 g/bhp-hr for PM. The 0.25 g/bhp-hr upper limit proposed here for PM is a reduction from the 0.60 g/bhp-hr which now applies. EPA believes a reduction in this value is appropriate even though the stringency of the PM standard is not being changed. Unless other factors dictate, normal practice has been to set the upper limit for FELs at the level of the previous standard. An exception to this practice was made in 1990 when the full current ABT program was promulgated. At that time engines were only meeting a 0.60 g/bhp-hr PM standard, and it was not clear that a 0.25 g/bhp-hr upper limit would provide adequate flexibility for 1994 and later model years. At that time the PM standard was set to drop from 0.60 g/bhp-hr to 0.25 g/bhp-hr in 1991. The 0.25 g/bhp-hr standard was to be in place for only three model years (1991–1993) before dropping to 0.10 g/bhp-hr and as part of their compliance strategy some manufacturers indicated plans to use credits to meet the 0.25 g/bhp-hr standard and desired that flexibility to continue after the standard dropped to 0.10 g/bhp-hr. By 2004, the 0.10 g/bhp-hr standard will have been in place for ten years, and the need for flexibility to certify above 0.25 g/bhp-hr should have disappeared by that time. In fact, in 1996 only three diesel engine families out of about 90 certified above the 0.25 g/bhp-hr level.

One of the potential problems with ABT programs is the possibility that manufacturers will reduce their compliance margins relative to the standards, or associated FELs, in order to maximize the generation of credits for low emitting engines and minimize the need for credit use for high emitting engines. Compliance margins are used to protect against unexpected failure of emission standards due to the variability inherent in both producing and emission testing of engines. To avoid having engines exceed their FEL, the manufacturer includes a safety factor and certifies with emission levels somewhat below the FEL. As the manufacturer reduces these compliance margins, it increases its odds of experiencing an unexpected failure of the FEL, either during assembly line testing or in-use. However, the ability to generate and use credits encourages the manufacturer to set its FELs as low as possible. To the extent that a manufacturer reduces its compliance margins under the proposed new ABT provisions, there is a risk that such a manufacturer's engines would not meet the FELs.

The Agency is unsure to what extent such ''margin shaving'' might occur as a result of the modified ABT program being proposed today. However, to protect against such a possibility, EPA is proposing to require a minimum margin in order to participate in the modified ABT program. Based on current certification data, compliance margins vary from essentially zero to about 18 percent, with the average being about 10 percent. To help ensure that a manufacturer's engines do in fact meet their FELs without unduly constraining how margins are used, today's proposal requires a minimum margin of at least five percent to participate in the modified ABT program. Even though some manufacturers have higher margins, EPA believes that a five percent value provides reasonable protection against margin shaving. The larger margins found in some engine families may exist for other reasons. To

provide reasonable flexibility, it is also proposed that manufacturers be permitted to use a margin of less than five percent if they have test data which demonstrates that a lower margin is sufficient. Comments are requested on the validity of the Agency's concern as well as on the proposed use of a minimum required margin. Commenters supporting this approach should also comment on the appropriate size of the margin.

Since the useful life for heavy heavy-duty diesels (HHDDEs) is being proposed to increase in 2004 along with the change in emission standards, the question arises of how to determine appropriate credits under the modified ABT program for those HHDDEs engines being certified to the shorter useful life provisions prior to 2004. In-use emissions generally increase, or ''deteriorate,'' with increasing mileage. Thus, if those engines had been certified to the longer useful life, they normally would have had to account for more deterioration than for the shorter life. This would have produced a higher FEL, and less credit, than would the shorter life.

For NO_X, dealing with the issue of the amount of credits is fairly straightforward. NO_X emissions from HHDDEs show little deterioration, and in some cases can actually decline with age. Therefore, the Agency believes an appropriate adjustment for useful life can be made by simply extending the NO_X deterioration factor used in certifying the engine family to the proposed 435,000 mile life. This should give a conservative estimate of likely deterioration over the longer life period. Under this approach the extension would be performed only for the purposes of calculating credits for the modified ABT program, and would not impose added certification durability requirements or extended recall testing limits as the useful life (and corresponding obligation to comply with the emission standards) would not be extended. If a manufacturer felt that a projection of its deterioration factor was inappropriate, it could exercise the existing option under 40 CFR 86.090–21(f) to petition the administrator for a longer useful life for its engine, and determine a new deterioration factor for that new useful life.

Under the approach just described for extending NO_X deterioration factors, the manufacturer incurs no added liability for the mileage extension from 290,000 miles to 435,000 miles. The above approach seems appropriate to the Agency for purposes of quantifying the amount of credits given the transitional nature of the useful life issue and the general stability and predictability of NO_X emissions. However, in various credit and trading programs EPA has set policy that credit generation should be based on an enforceable obligation to achieve the expected emission reductions. See, e.g., Interim Guidelines on the Generation of Mobile Source Emission Reduction Credits, 58 FR 11134 (February 23, 1993). If deemed appropriate, this could be accomplished by requiring the manufacturer to certify using the same extended NO_X deterioration factor it used for credit calculations. This would establish in-use liability for the extended mileage period. If this were done, it would apply only for the NO_X standard. EPA believes this extended useful life could be accomplished without imposing additional certification burdens or requirements, given the current flexibility in certification regulations and the expected deterioration associated with NO_X emissions over time. EPA invites comments on this alternate approach as well as the proposal to calculate the amount of NO_X credits without extending the useful life. Comments should address which of these approaches should be adopted in the final rule.

In the case of particulate matter (PM) emissions, the Agency has much less confidence in the reliability of projections from the current 290,000 mile life. In this case there is a greater possibility of unexpected changes in emissions later in the engine life which would not be consistently captured with such an approach. Therefore, EPA is proposing to allow credits to be generated only for the applicable engine family's certified useful life period. In most cases this would be 290,000 miles. However, as with NO_X, if a manufacturer wished to generate credits for a longer period, it could petition the Administrator under the provisions of 40 CFR 86.090–21(f) for a longer useful life for its engine. It would then be able to generate credits for that entire useful life period.

Finally, it should be noted that EPA is proposing to revise the technique used to calculate credit exchange (generation and use) amounts. In the current ABT system, credits are generated based on the lowest horsepower configuration in a family and credit use is calculated based on the highest horsepower configuration. Credit generation is calculated based on the configuration which generates the least benefit within the family while credit use is based on the configuration which requires the most credits to comply. In some cases this can result in large offsets (i.e., credits are generated at the lowest rate and credits required at the highest rate). Based on EPA's experience with ABT programs, we find this offset to be unnecessary. Over the past five years the ABT program has been implemented smoothly, leaving less need for the safeguards this provision brought to the original program. Furthermore, this provision tends to introduce a penalty for credit generating engines, thus reducing the incentive to introduce clean technology. Therefore, EPA proposes to base such calculations on sales-weighted average horsepower values within each family. EPA believes use of an average horsepower for generating and using engines is sufficient to ensure no environmental loss from the credit transaction.

EPA received comments on the ANPRM requesting clarification on whether or not, and if so, how credits from engines certified below the applicable standard can be used by entities other than the engine manufacturers (e.g., engine purchasers). EPA believes that in some circumstances this could well be appropriate and consistent with the intent of the ABT regulations. EPA asks comment on what revisions or clarifications may be needed to the ABT program to facilitate this possibility. For example, EPA is interested in comment on how we can assure that credits not be counted by both the engine manufacturer and the vehicle/engine user (double counted).

The interim modifications to relax the credit discounting and lifetime restrictions for model years 1998–2006 are being included primarily to assist in compliance with the proposed standards beginning in 2004. As was discussed earlier in this section, the technological challenge of meeting the proposed standards is much less for otto-cycle engines as compared to diesel cycle engines. In fact many models already have certification levels near or below the level of the proposed standard. While the revised ABT program could provide an incentive to produce even cleaner otto-cycle engines before 2004, EPA is concerned that the discount and lifetime revisions would provide ''windfall credits'' to the otto-cycle industry. A similar concern does not exist for diesel cycle engines, because their current $NMHC+NO_X$ emission rates are well above the level of the proposed standard. EPA asks comment on this issue including whether or not and why these two program changes should be extended to otto-cycle engines or just the current A, B,& T program should be available.

In its comments on the ANPRM submitted on behalf of a consortium of environmental groups, NRDC raised several objections to the possible ABT program changes discussed in that document and in the SOP. Among these, NRDC opposed removal of the discounting and limited life provisions of the current program. NRDC argued that these changes could lead to unnecessary delays in compliance with the proposed new standards and could result in increased emissions. Commenting specifically on the removal of discounting, NRDC argued that in the absence of discounting, the public ''relinquishes all of the benefits of unanticipated advances in technology.'' The Agency does not agree with these comments. As described above, existence of the ABT program allows the Agency to propose and finalize a standard that might not be otherwise appropriate under the CAA, since ABT reduces the cost and improves the technological feasibility of achieving the standard. Furthermore, the generation of credits means that emission reductions have been realized earlier than required by the standards, which EPA believes is a benefit to the public. The fact that the use of credits would allow some specific engine families to delay compliance with the proposed new standards has no inherent air quality impact since the credits represent offsetting emission reductions below the applicable standard from other engines. EPA encourages further comment on the appropriateness of the Agency's proposal to impose no discount or life limit on credits generated and used under the modified ABT program.

In their comments NRDC also opposed expansion of the trading provisions to include cross-cycle, cross sub-class or cross-source trading. None of those changes are included in today's proposal. Comments are invited on the appropriateness of EPA at some later date proposing to allow cross-cycle, cross-cycle with the same fuel, cross-subclass or cross-category (e.g., highway and non-road) credit exchanges as part of the modified ABT program.

In their comments on the ANPRM, NRDC stated that only engines meeting the proposed standards early should be able to get the benefits of the temporary changes to discount and lifetime provisions. EPA explored this concept, but for two reasons chose not to include it in the NPRM. First, such a restriction would reduce the value of ABT programs in assisting transition to the 2004 standards. A manufacturer would have no incentive to introduce improved technology early unless the engine made it all the way to the level of the proposed standards. Second, since early additional emission reductions have equal value whether the engine is above or below the proposed standards it would be inconsistent with air quality goals to create a disincentive for early additional emission reductions. However, this view is premised on the design criterion discussed above, i.e., no cross-cycle credit exchanges. If cross-cycle exchanges are permitted without some form of a trigger level for eligibility, an unusual situation could be created where gasoline-fueled otto cycle engines could generate credits for use by petroleum-fueled diesel cycle engines. This in turn would create a disincentive for technology innovation for diesels which is one of the key goals for the ABT program.

Readers are encouraged to review the draft regulations for a fuller understanding of how the proposed ABT program would operate. The Agency solicits comments on all aspects of the ABT changes being proposed, including comments on the benefit of these changes to manufacturers in meeting the proposed emission standards and any potential air quality impacts which might be associated with them.

IV. Technological Feasibility

This section discusses the emission control technologies that EPA believes would be available for engine manufacturers to meet the proposed 2004 standards. Included in this discussion are estimates of emission reductions associated with these technologies and their potential to impact performance. Because of the significant differences between the operation, emissions, and likely control strategies for diesel and gasoline heavy-duty engines, each engine type will be treated separately. Further information on the basic characteristics of diesel and gasoline heavy-duty engines may be found in Docket A–95–27.[46]

Following is a summary of the key technologies discussed in the Regulatory Impact Analysis (RIA). For more detail on the emission control technology described in this section, see Chapter 4 of the RIA. This chapter of the RIA also describes many of the technologies that are still under development that could allow heavy-duty highway engines to meet or exceed the reduced emission standards proposed in this action. Several technologies described in the RIA are not included in this section because EPA believes they are less likely to be used by engine manufacturers in 2004 than those strategies, techniques, and technologies described here.[47]

The following discussion of technologies includes a wide range of alternatives from which manufacturers may choose to comply with the proposed emission standards. Not all of these technologies will be needed to reduce NO_X or HC emissions to comply with the proposed emission standards. Manufacturers may develop and use technologies to improve fuel economy or performance or to control particulate emissions at a lower cost. The analysis of economic impacts in Section V.B. reflects this by assessing the incremental cost of adopting a limited package of technological changes to heavy-duty engines.

As will be discussed further below, EPA believes that the goals set by this proposal are challenging but feasible. They clearly represent major reductions compared to current engine emission levels. At the same time, heavy-duty engine technology is in a period of rapid development, and EPA does not see any reason to expect that such development will be slowed in the foreseeable future. Published work shows that research engines are already beginning to approach the levels required by the new standards. There are certainly many significant technical challenges to translating research work into acceptable products for the marketplace. However, the emission targets are set in the framework of a long lead time, substantially longer than has been the case in many previous heavy-duty engine rules. Also, except for the use of EGR on heavy-duty diesel engines, each of the technologies anticipated for complying with the proposed emission standards, as described below, have already been applied to and proven on recent model year heavy-duty engines. Thus, on balance, the Agency believes that the proposed standards are feasible for the heavy-duty industry.

Through comments on the ANPRM, some concern has been expressed to EPA that lower standards may be more appropriate for heavy-duty engines. One suggestion was that heavy-duty diesel engines should be required to meet a 0.05 g/bhp-hr PM standard since urban buses are now held to this level. In addition, commenters recommended that separate, lower HC plus NO_X and CO standards should be set into place for heavy-duty gasoline engines. Based on the information discussed further

[46] Memo from Tad Wysor (EPA) to Air Docket A–95–27, ''Summary of Heavy-Duty Engine Emission Control Technologies,'' II–B–4, August 24, 1995.

[47] The technological feasibility of meeting the proposed standards using alternative fuels is discussed in Chapter 4 of the RIA.

below and in the RIA, EPA believes that the proposed standards represent the lowest levels consistent with the constraints of section 202 (a)(3)(A)(i) of the Clean Air Act. That section requires EPA to establish the ''greatest degree of emission reduction achievable through the application of technology which the Administrator determines will be available for the model year to which such standards apply, giving appropriate consideration to cost, energy, and safety factors associated with the application of such technology.''

Given the uncertainty associated with the long lead time, this analysis would be re-evaluated in the proposed 1999 review of the feasibility of the standards discussed in section III.B above. EPA requests comment on the availability and effectiveness of emission control technologies that may be applied to heavy-duty on-highway engines to meet the proposed standards. EPA also requests specific comment on the appropriateness of a separate, lower standard for heavy-duty gasoline engines.

A. Diesel Engines

Highway heavy-duty diesel engine manufacturers have historically been very successful in lowering both NO_X and PM levels to meet EPA emission standards. EPA standards have required a reduction in NO_X emissions of over 50 percent and PM reduction of over 80 percent largely within the past 5 years. Engine manufacturers have been able to achieve the majority of these reductions using changes in engine hardware with minimal reliance on exhaust aftertreatment devices. Today's heavy-duty diesel engines are also well below the standards for HC and CO. Over this same period, engine manufacturers have been able to provide their customers with increased power, improved fuel economy and improved engine durability.

Indications are that HC, NO_X and PM control technologies have not yet reached their full potential. A broad range of current published research, referenced in the RIA, shows that HC + NO_X levels of 2.5 g/bhp-hr with a PM level of 0.10 are already being approached in laboratory diesel engines. One example, discussed in the RIA, is a turbocharged and aftercooled engine that uses optimized swirl and cooled EGR to achieve emission levels of 2.0 g/bhp-hr HC + NO_X and 0.13 g/bhp-hr PM (average of three operating modes). Engine manufacturers and other companies have conducted extensive research that is still confidential or is not yet published for other reasons. EPA believes that the unpublished work in the field of diesel engine emission control represents progress in research and development that goes well beyond that described in the published literature. The Agency recognizes that such results do not, of themselves, demonstrate the feasibility of reaching such levels in production engines. However, as discussed below, EPA believes that for the 2004 time frame, technologies will be optimized to meet—and in some cases possibly exceed—future emission-control targets.

Under the proposal, the engine manufacturers will have an effective leadtime of eight years. This is twice that available in previous heavy-duty engine rules. This long leadtime is valuable to heavy-duty diesel engine manufacturers for several reasons. Due to the stringency of the proposed standards, it is likely that manufacturers will need to make fundamental changes in engine technology. History has shown that emissions can be reduced more cost-effectively when the engine manufacturers are given a reasonable amount of time for research and development (R&D). The relatively long lead time available for this rule provides adequate time for a strong, orderly, and comprehensive R&D program which focuses not only on emission reduction, but also on addressing fuel consumption, durability and maintenance concerns. EPA anticipates that heavy-duty diesel engine manufacturers would focus primarily on NO_X control strategies to meet the proposed 2004 standards rather than NMHC control. EPA also expects that manufacturers will focus on in-cylinder control strategies as opposed to aftertreatment approaches. Combustion optimization through improved air and fuel controls are expected to be at the center of the strategy for reducing NO_X emissions (and HC where possible), while holding the line on PM emission rates. Such strategies also hold promise for positive impacts on fuel consumption. Combustion optimization can be achieved through a combination of strategies related to combustion chamber design improvements, upgrades in fuel system controls, and modifications of intake air distribution approaches and characteristics. The R&D associated with the assessment and optimization of such strategies and the application of the results of this work to the various heavy-duty diesel engine models will need to be conducted during the available leadtime.

Individual technologies may have different effects on NO_X, PM, and HC emissions, though manufacturers can balance these to produce an engine that effectively controls all emissions. NO_X emissions are controlled primarily by lowering peak combustion chamber temperatures. However, simply lowering combustion temperatures can lead to an increase in PM or HC formation because PM and HC are more likely to form at lower temperatures. NO_X control strategies such as retarding fuel injection timing by themselves are limited because they cause an increase in PM or HC. Engine manufacturers have had to devise more sophisticated emission control strategies that allow them to simultaneously control NO_X, and PM, and HC. Manufacturers have used a variety of technologies, often balancing their effects and optimizing among them to comply with the emission standards. EPA therefore believes that manufacturers will need some, but certainly not all, of the technologies that are primarily for controlling PM or HC emissions to meet the standards proposed in this action.

Combustion chamber design is a key area for improvements to reduce emissions and increase performance. Manufacturers are continuously working to improve the combustion chamber geometries of their engines to maximize efficiency and reduce emissions. Design variables include such things as the shape of the combustion chamber, the location of the fuel injector, valve timing, and air intake geometry. Efforts to redesign the shape of the combustion chamber and the location of the fuel injector have been directed primarily at optimizing the relative motion of the air and injected fuel. Increasing the turbulence of the intake air (such as through inducing swirl) can reduce NO_X and PM emissions from diesel engines by improving the mixing of air and fuel in the combustion chamber. Increasing the compression ratio of the engine will generally reduce fuel consumption and PM, but tends to increase NO_X emissions. Moving from 2 to 4 valves per cylinder can be used to improve engine breathing and will allow the fuel injector to be placed in the center of the cylinder bore, improving combustion. Finally, higher precision in the bore honing and the matching of the piston and rings can reduce the amount of oil that passes from the crankcase into the cylinder. This will result in a reduction in PM.

Emission control and diesel engine performance may also be improved through advances in fuel injector design. Design variables for fuel injectors include injection pressure, spray pattern, and control of the rate of fuel injection over the course of the injection event. The combination of

reduced droplet size and improved mixing leads to decreased HC and PM. This improved fuel injection can simultaneously lower NO_X emissions by reducing the time between the initial injection and ensuing ignition of the fuel, which minimizes the level of premixed combustion.

Varying the rate at which fuel is injected into the cylinder is another strategy that may be used to reduce HC, NO_X, and PM emissions. This ''rate shaping'' is especially effective when combined with electronic controls. A low rate pilot injection may be used at the beginning of combustion to shorten the ignition delay, therefore shortening the pre-mixed burning phase of combustion, which is most conducive to NO_X formation. At low loads, improved fuel injection can reduce NO_X, the soluble organic fraction of PM, and fuel consumption, with some possible penalty in smoke. One experimental study, referenced in the RIA, showed that rate shaping and fuel injection parameters could be used to achieve 3.5 g/bhp-hr NO_X and 0.10 g/bhp-hr PM from a diesel engine operating at 75 percent load, without the use of EGR (HC levels were not reported).

Engine manufacturers may reduce emissions from their engines through optimization of charge air pressures and response rates for all types of engine operation (speed and load). Charge air compression is used in almost all current heavy-duty diesel engines. For four-stroke diesels, turbocharging is the most common method of increasing boost air pressure into the cylinder. With an increase of air moved into the cylinder, more fuel may be injected resulting in higher power. One limitation of a turbocharger is that it has an inertial lag time associated with its response to changing operating conditions. As a result, during transient operation, too little intake air compression may occur at the beginning of an acceleration, while an excessive boost may remain at the start of the next steady-state operation. In addition, a given turbocharger optimized for high loads may have compromised efficiency at low loads. A variable geometry turbocharger may be used to increase the boost response rate and provide appropriate air/fuel ratios for varying loads and speeds. This control of the air/fuel ratio can often lead to decreased emissions. In one study, referenced in the RIA, electronic controls combined with a variable geometry turbocharger achieved a 37 percent reduction in HC and a 34 percent reduction in NO_X without an increase in PM over a portion of the HD-FTP.

Exhaust gas recirculation (EGR) is probably the most important in-cylinder diesel engine control technology for obtaining significant NO_X reductions to meet the 2004 proposed standard. Under this approach, a portion of the exhaust gas is routed back into the intake manifold. This has the effect of reducing peak temperatures, and thus reducing NO_X formation in the cylinder. This strategy will be focused on low and medium load conditions due to possible PM and fuel consumption increases at high loads. EPA expects that the effectiveness of the EGR system will be optimized and its potential adverse affects minimized by integrating its control into the overall electronic controls used for other engine systems. One method for controlling the PM emissions attributed to EGR, which may be used on some designs, is to cool the exhaust gas recirculated to the intake manifold. By cooling the recirculated gas, more exhaust gas can be added to the intake charge without reducing the supply of fresh air into the cylinder. Another concern associated with EGR is that, by being recirculated, the particulate or other contaminants in the exhaust may find its way into the oil and degrade the oil's performance, resulting in a durability concern. This durability concern may be alleviated by keeping the EGR fraction of the intake charge below 10 or 15 percent, modifying lubricating oil additive packages, improving oil filtration, and/or more frequent oil changes. In the worst case, some manufacturers may consider some form of an in-line particulate removal device such as a filter in the stream of recirculated exhaust gas.

Engine manufacturers have started to use oxidation catalysts in some cases where engines have needed help meeting particulate standards. Efforts are also being made to develop a durable and cost effective NO_X reduction catalyst that will operate on the lean exhaust which is produced by diesel engines. However, due to projected engine design improvements, EPA expects the engine manufacturers to focus on meeting the proposed standard without the use of aftertreatment. Alternatives to aftertreatment are generally preferable because of high costs, space requirements, backpressure effects, and possible durability concerns (with respect to long life of diesel engines) associated with aftertreatment devices.

In summary, EPA believes that combustion optimization through strategies such as air and fuel control and EGR would be the primary NO_X control strategy for meeting the proposed standards. However, as NO_X emissions are reduced through engine controls, there is often a tradeoff resulting in an increase in PM emissions. Strategies that would be expected to be used to control PM emissions include further optimization of combustion chamber geometry, advances in fuel injection, fuel rate shaping, and advances in turbocharger design. These PM control technologies may also be used to increase power from the engine and reduce fuel consumption. EPA believes that manufacturers would make use of the PM control technologies, regardless of further emission control, to achieve benefits in power and fuel consumption. All of the technologies described in this section have been applied to and proven in on-highway diesel engine applications. Further, all of the technologies, with the exception of EGR, have been proven in heavy-duty diesel applications. Even EGR is used on at least one 1996 light heavy-duty diesel engine model. By combining these strategies in various ways, EPA believes it is technologically feasible to meet the proposed standards for model year 2004. Together these strategies should allow heavy-duty diesel engines to achieve the proposed NO_X + NMHC reductions without increasing PM or other emissions.

Most of the results discussed above are based on research using conventional on-highway diesel fuel. Another parameter which affects emissions from diesel engines is the composition of the fuel being used. While much can be said about the effect of current fuels on current engines, the degree of sensitivity of future, low emitting, engines to fuel parameters is not as well understood. The Agency's current view is that fuel changes could reduce the amount of emission control necessary for the engine, but fuel changes are probably not necessary to meet the proposed standards. However, this remains an area of uncertainty and is one of the issues which would be addressed further in the proposed 1999 review of the feasibility of the standard, as discussed in section III.B above.

B. Gasoline Engines

Gasoline engine manufacturers are producing heavy-duty engines that exceed the level of emission control required by current standards. Some 1996 model year heavy-duty gasoline engine families have certified emission levels below the standards proposed for 2004. Thus, the Agency believes that complying with the proposed standards will be fairly straightforward for gasoline engines. EPA requests

comment on the appropriateness and effectiveness of the technologies described below.

Current heavy-duty gasoline engine emission levels are achieved mainly through the use of EGR and either air-assisted oxidation catalysts or three-way catalysts. Many of these engines have used open-loop engine controls and electronic fuel injection for years. However, the three-way catalysts require precise control of the exhaust air-fuel ratio for maximum performance. By including a feedback loop in the control system, the precision of the air-fuel ratio in the exhaust is greatly increased, especially during transient operation. Therefore, EPA believes that, through the use of closed-loop electronic control and the upgrades to system management available with that approach, manufacturers can significantly improve their emission-control capability. These reductions may be further assisted by improvements in fuel injection technology or EGR.

Improving fuel injection has been proven to be an effective and durable strategy for controlling emissions and reducing fuel consumption from gasoline engines. Improved fuel injection will result in better fuel atomization and a more homogeneous charge with less cylinder-to-cylinder and cycle-to-cycle variation of the air-fuel ratio. These engine performance benefits will increase as technology advances allow fuel to be injected with better atomization. Increased atomization of fuel promotes more rapid evaporation by increasing the surface area to mass ratio of the injected fuel. This results in a more homogeneous charge to the combustion chamber and more complete combustion. EPA believes that multi-port fuel injection will be used in most, if not all, applications under the proposed standards because of its proven effectiveness. Because of the performance and fuel consumption improvements associated with multi-port fuel injection, it is likely that most engine models would incorporate this technology by 2004 anyway.

Exhaust gas recirculation is currently used on heavy-duty gasoline engines as a NO_X control strategy. Recirculated gases reduce the peak flame temperature, thus reducing NO_X. Because the recirculated gases limit the amount of oxygen available for combustion, there can be some penalty in fuel economy if too much gas is recirculated. One method of increasing the engine's tolerance for EGR is to stratify the recirculated gases in the cylinder. This stratification allows high amounts of dilution near the spark plug for NO_X reduction while making undiluted air available to the crevices, oil films, and deposit areas so that HC emissions may be reduced. Stratification may be induced radially or laterally through control of air and mixture motion determined by the geometry of the inlet ports. One study of this strategy is referenced in the RIA.

EPA believes that the most promising overall emission control strategy for heavy-duty gasoline engines is the combination of a three-way catalyst and closed loop electronic control of the air-fuel ratio. Control of the air-fuel ratio is important because the three-way catalyst is only effective if the air-fuel ratio is at a narrow band near stoichiometry. For example, for an 80 percent conversion efficiency of HC, CO, and NO_X with a typical three-way catalyst, the air-fuel ratio must be maintained within a fraction of one percent of stoichiometry. During transient operation, this minimal variation cannot be maintained with open-loop control. For closed-loop control, the air-fuel ratio in the exhaust is measured by an oxygen sensor and used in a feedback loop. The throttle position, fuel injection, and spark timing can then be adjusted for given operating conditions to result in the proper air-fuel ratio in the exhaust. In addition, electronic control can be used to adjust the air-fuel ratio and spark timing to adapt to lower engine temperatures, therefore controlling HC emissions during cold start operation.

A three-way catalyst may be a single converter or have two converters in series. A converter is constructed of a substrate, washcoat, and catalytic material. The substrate may be metallic or ceramic with a flow-through design similar to a honeycomb. A high surface area coating, or washcoat, is used to provide a suitable surface for the catalytic material. Under high temperatures, the catalytic material will increase the rate of chemical reaction of the exhaust gas constituents. In a typical three-way catalyst design with two converters, the first converter will be a reduction catalyst which converts NO_X to nitrogen and water. Palladium is often used as the NO_X reduction catalytic material with rhodium added to control ammonia formation. Ammonia, which may be converted back to NO_X in the second converter, can also be controlled through the use of tight air-fuel ratio control. The second converter is an oxidation catalyst and typically uses platinum and rhodium to convert HC and CO to CO_2 and water. Three-way catalytic converters using a single monolith generally use one or more of the metals mentioned above (platinum, rhodium, and palladium) to catalyze the desired reactions. These designs may be preferable since less materials are used and less space is required.

In summary, EPA believes that gasoline engine manufacturers, to the extent they need to make improvements, can meet the proposed standards by refining those technologies already employed on their engines. The use of more powerful electronics to better control combustion and aftertreatment will likely be the most important focus of technology upgrades enabling manufacturers to reduce emissions. EPA therefore believes it is technologically feasible for heavy-duty gasoline engines to meet the proposed standards for model year 2004.

C. Safety and Energy

One of the factors considered by EPA in assessing the feasibility of its proposed standards is safety. Section 202(a)(3) of the Clean Air Act requires that EPA set emission standards for heavy-duty engines that reflect the ''greatest degree of emission reduction achievable through the application of technology which the Administrator determines will be available for the model year to which such standards apply, giving appropriate consideration to cost, energy, and safety factors associated with the application of such technology.'' [48] EPA has considered the safety implications of the standards in today's proposal. In the course of this consideration, the Agency has consulted with the Department of Transportation, to make use of that Department's expertise in assessing vehicle safety.

EPA does not believe that there are any significant safety concerns associated with the technologies described in this section. In general, they all represent the progressive development of technology already in use. Except for the use of EGR on heavy-duty diesel engines, all of the technologies anticipated for use in 2004 have already been applied to and proven on recent model year heavy-duty engines. As for the use of EGR, EPA is not aware of any safety problems where EGR has been used on light-duty diesel vehicles or on heavy-duty gasoline engines. EPA sees no reason why the use of EGR on heavy-duty diesels would create any new safety problems. EPA welcomes comment on any safety issues that commenters believe might be associated with today's proposal.

EPA believes that there will not be significant energy concerns associated

[48] 42 U.S.C. 7521(a)(3)(A)(i).

with the control strategies which would be available to meet the proposed standards. EPA expects that manufacturers will focus on maintaining or decreasing the fuel consumption of their engines in the development of engines that will meet the proposed standards. For heavy-duty diesel engines, many of the technologies that would likely be used to control PM emissions would also be used to offset the negative effects of EGR on fuel economy. For heavy-duty gasoline engines, the combination of fuel injection advances and closed-loop control used to control emissions could actually result in a fuel economy benefit.

V. Impacts of Proposed Program

A. Environmental Impacts

1. Heavy-Duty NO_X Emissions Impacts

The NO_X inventories used for this rulemaking were based on a detailed analysis of NO_X emissions that was prepared for EPA by E.H. Pechan and Associates, as described in Section II. To calculate the impact of this proposal, it is necessary to estimate average NO_X and average NMHC emission levels resulting from the combined NO_X + NMHC standard. The NO_X emission level was determined by analyzing the relative cost effectiveness of NO_X and NMHC emissions reduction technologies; NO_X-reduction technologies are expected to be much more cost-effective than NMHC-reduction technologies, which are only practical for a small number of engine families that have relatively high NMHC emissions. As a result, NMHC emissions are expected to be only slightly less than current levels, (see following section for additional discussion), and NO_X emissions are expected to be reduced to below 2.0 g/BHP-hr to provide a sufficient compliance margin. Thus, the effect of the combined standards on NO_X was modeled as being equivalent to a 2.0 g/BHP-hr NO_X-only standard. Full details of the air quality impacts can be found in the RIA. The following paragraphs summarize the key results. The public is encouraged to read the full analysis, and to comment on all aspects of the work.

Figure 7 shows projections of total NO_X emissions, with and without the proposed controls, for the entire nation. The emissions are projected to decline over the next several years, due to the implementation of previously promulgated controls, but then begin to increase due to growth in the number of vehicles and other sources. By the year 2020, without additional control, total national NO_X emissions are projected to actually exceed current levels. Even with the implementation of the proposed standards, total NO_X emissions are expected to grow in the future. Figure 8, which presents the projections of NO_X emissions from heavy-duty engines, with and without the proposed controls, shows that the proposed standards are expected to prevent the contribution of heavy-duty engines from increasing before the year 2020.

BILLING CODE 6560–50–P

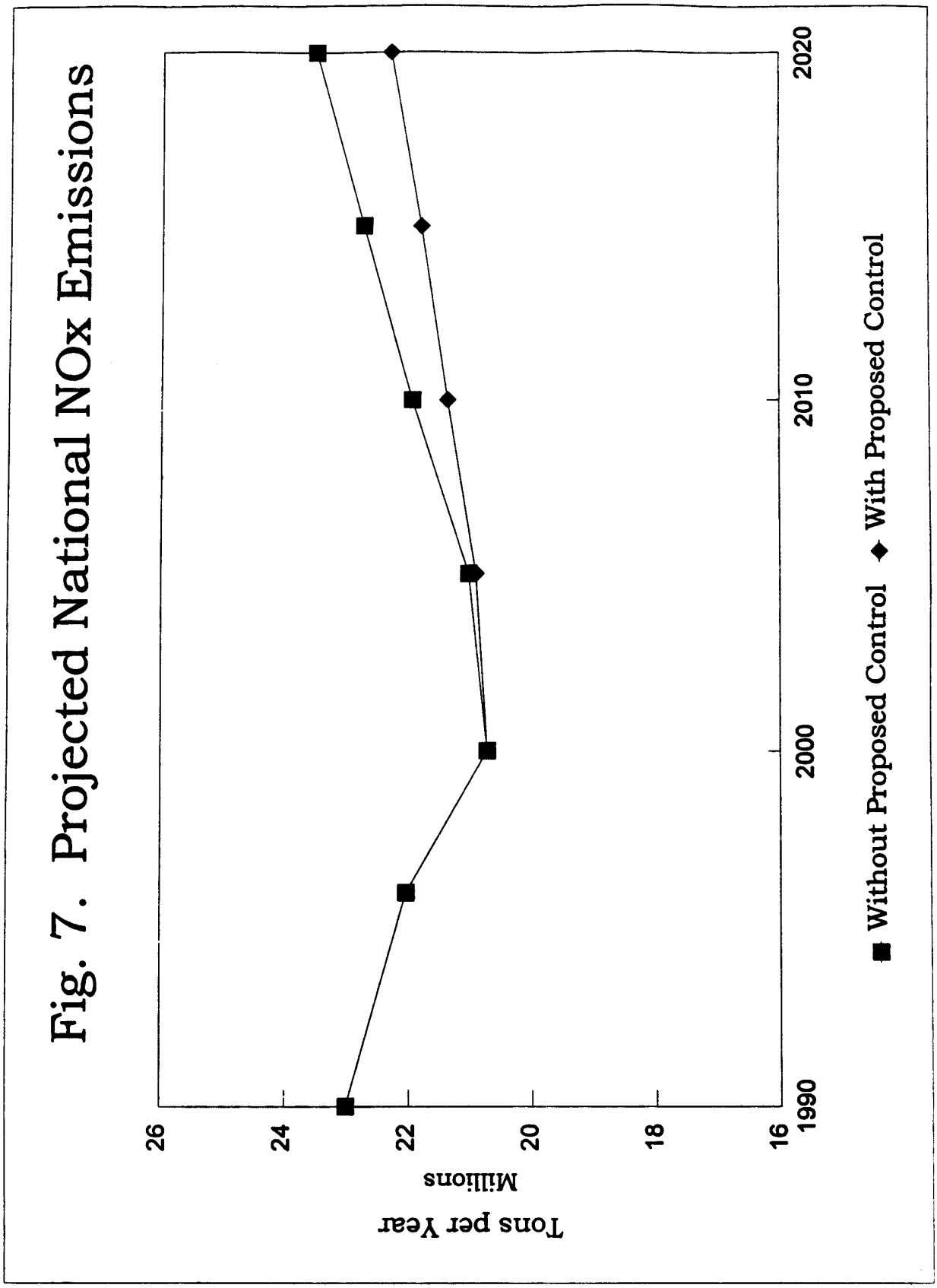
Fig. 7. Projected National NOx Emissions
Tons per Year
Millions
26
24
22
20
18
16
1990
2000
2010
2020
■ Without Proposed Control ◆ With Proposed Control

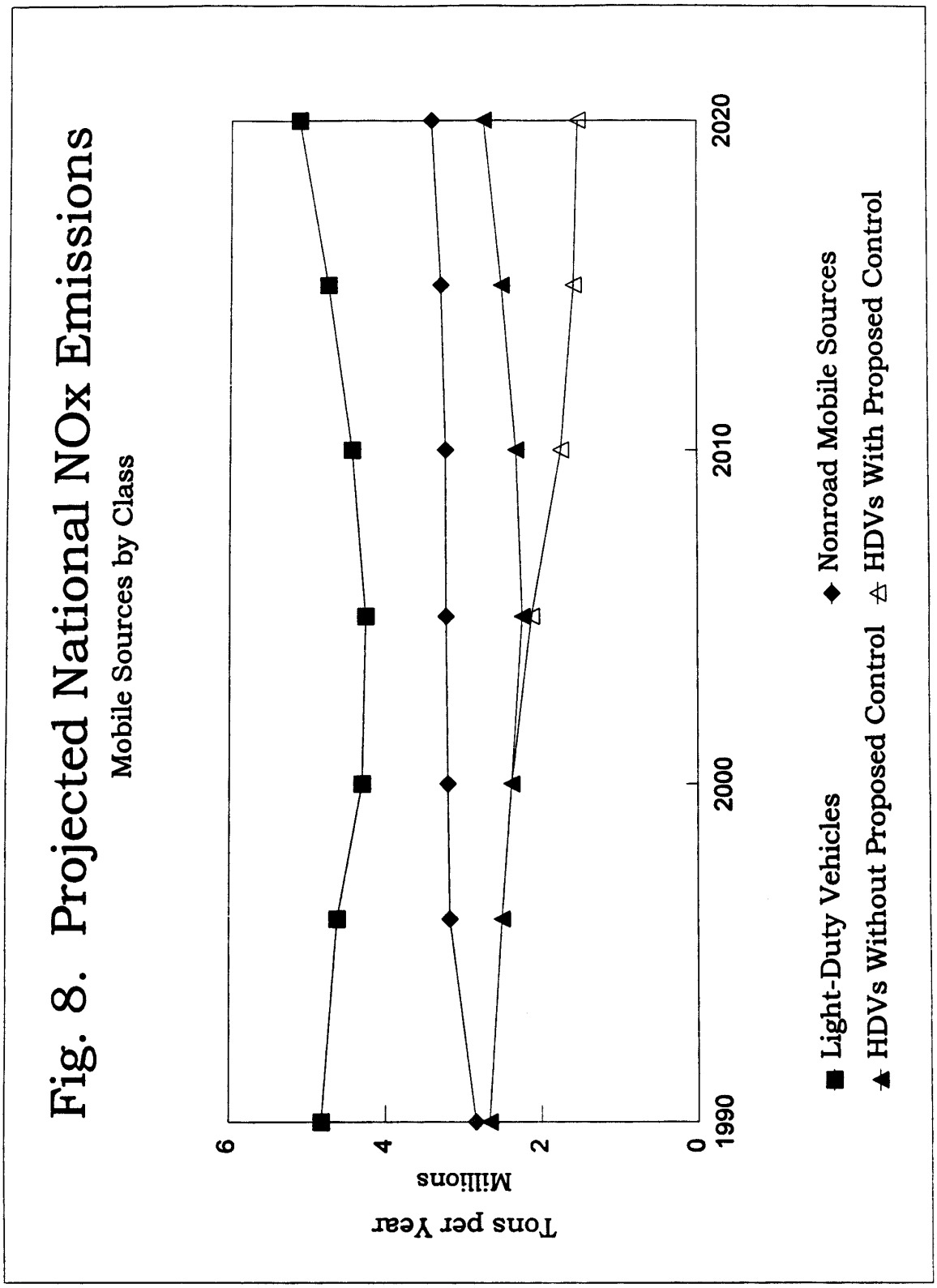

BILLING CODE 6560–50–C

The estimates of the total NO_X reductions are shown in Table 3. Almost half of the reductions would occur in nonattainment areas, and nearly 90 percent of the reductions would occur in regions where NO_X emissions are reasonably expected to have a significant effect on nonattainment areas.[49]

TABLE 3.—ESTIMATED NATIONAL NO_X Emissions Reductions From Proposed Standards for Heavy-Duty Engines

[Thousand Tons per Year]

Year	Diesel emissions reductions	Gasoline emissions reductions	Total emissions reductions
2005	106	12	118
2010	518	59	577
2015	832	102	934
2020	1,066	149	1,215

2. Heavy-Duty NMHC Emissions Impacts

Estimates of the impact of this action on NMHC emissions were developed by assuming that the combined NMHC plus NO_X standards are equivalent to that of 0.4 g/BHP-hr NMHC-only standards; this discussion briefly summarizes the detailed analysis in the RIA. This is consistent with the previous assumption that the combined standards are equivalent to that of 2.0 g/BHP-hr NO_X-only standards It was also assumed that, without the proposed NMHC control, average NMHC emissions from 2004 and later model year heavy-duty engines would be the same as 1994 model year heavy-duty engines (based on certification data), since there are no new PM or HC standards after 1994. Using these assumptions, the expected exhaust NMHC reductions for 2004 and later model year engines would be 9 percent for diesels and 24 percent for gasoline. The effect of these reductions on nationwide emissions was modeled using MOBILE5a, using the VMT estimates from Pechan. The results are shown in Table 4. The reason why these reductions are small relative to the decrease in the numerical level of the standards is that many heavy-duty engines are currently being certified well below their applicable hydrocarbon standards. As is discussed in the RIA, however, the lowering of the NO_X standard in 1998 may cause some increases in NMHC emissions from diesel engines (even if the emissions remained below the current HC standard), such that the actual benefit of this standard may be greater. Moreover, it is worth noting that the inclusion of NMHC emissions in the proposed standards also serves to prevent increases in NMHC emissions that may otherwise have occurred as a result of lowering the NO_X standard, given the tradeoff between NO_X reductions and HC/PM reductions that is often observed with diesel engines.

TABLE 4.—ESTIMATED NATIONAL NMHC EMISSIONS REDUCTIONS FROM PROPOSED STANDARDS FOR HEAVY-DUTY ENGINES

[Thousand Tons per Year]

Year	Diesel emissions reductions	Gasoline emissions reductions	Total emissions reductions
2005	2.2	0.5	2.7
2010	6.8	2.9	9.7
2015	12.1	5.2	17.3
2020	16.4	8.4	24.8

3. Particulate Emissions Impacts

The action being proposed should not have any effect on direct particulate emissions from heavy-duty engines, since it does not change the particulate standard. Manufacturers are expected to continue to produce engines with particulate levels slightly below the standard. The NO_X reductions discussed above, however, are expected to reduce the concentrations of secondary nitrate particulates. As discussed previously, NO_X can react with ammonia in the atmosphere to form ammonium nitrate particulates. In some areas in the western states, ammonium nitrate particulates can represent more than one quarter of the fine particulate in the air. The California Air Resources Board has preliminarily estimated that, in California, there are typically 4 to 19 (with an average of about 7) tons of nitrate particulate in the air for every 100 tons of NO_X in the air.[50] Unfortunately, such information is not available for the rest of the nation. As was described in the RIA, the national average for the years of interest was estimated as 4.3:100, assuming that the ratio would be 7.0 for the western part of the nation, and 3.5 for the eastern part. This estimate was used to determine the equivalent fine particulate emissions reductions caused by the NO_X emissions reductions, as is shown in Table 5. Future year estimates are extrapolations based on the NO_X reduction estimates for those years. The Agency recognizes the limited precision of these estimates, and requests comments on the potential for developing better estimates of the expected relationship between NO_X emissions and nitrate particulate formation during and after the year 2004.

TABLE 5.—ESTIMATED EQUIVALENT NATIONAL PARTICULATE EMISSIONS REDUCTIONS FROM PROPOSED STANDARDS FOR HEAVY-DUTY ENGINES

[Thousand Tons per Year]

Year	Total NO_X emissions reductions	Equivalent particulate emissions reductions
2005	118	5
2010	577	25
2015	934	40
2020	1215	52

4. Effect on Ozone

The effect of these NO_X emissions reductions on ozone concentrations is expected to vary geographically. In general, when fully phased-in, the effect of this action in most nonattainment areas should be a reduction in ozone concentrations on the order of a few percent. It should be noted, however, that the potential exists for a few localized areas to actually experience slight increases in ozone concentrations as a result of NO_X emissions reductions. The Agency is attempting to develop a more precise analysis of the effect of these reductions on ozone, including an analysis of the extent to which potential localized ozone increases could be mitigated through other emissions control programs.

5. Other Effects

Reducing NO_X emissions has a positive effect on visibility, since both NO_2 and nitrate particulates absorb visible light. As noted in the RIA, NO_2 and nitrate particulates can be responsible for 20 to 40 percent of the visible haze in some urban areas. The effect of this action on visibility should be small but potentially significant, given that it is expected to reduce overall NO_X emissions by several percent. For example, the proposed controls are expected to result in about 5 percent less total NO_X in the year 2020, and therefore would be expected

[49] These regions include all counties in ozone nonattainment, as well as all counties in attainment in: California, Texas, all states east of the Mississippi River, and all states on the western border of the Mississippi River.

[50] ''Conversion Factors for Secondary Formation of PM Nitrate from NO_X Emissions for California'', Draft, June 6, 1996, Leon J. Dolislager, Nehzat Motallebi, Bart E. Croes, California Air Resources Board.

to result in a decrease in haze of about 1 percent in an area where NO_2 and nitrate particulates cause 20 percent of the haze. NO_2 and nitrate particulates also contribute to decreased visibility in scenic rural areas in southern California, so these areas would similarly benefit from reduced NO_X emissions.

The standards being proposed here are also expected to provide benefits with respect to nitrogen deposition. The 1.2 million-ton per year reduction in NO_X emissions expected in 2020 as a result of this action is greater than the 400,000-ton per year reduction expected from Phase I of the Agency's acid rain NO_X control rule (59 FR 13538), which was considered to be a significant step toward controlling the ecological damage caused by acid deposition. This action should also lead to a reduction in the nitrogen loading of estuaries. This is significant since high nitrogen loadings can lead to eutrophication of the estuary, which causes disruption in the ecological balance. The effect should be most significant in areas heavily affected by atmospheric NO_X emissions. One such estuary is Chesapeake Bay, where as much as 40 percent of the nitrogen loading may be caused by atmospheric deposition. In addition to these benefits, the NO_X reductions from the proposed new engine standards are expected to have beneficial impacts with respect to crop and forest damage.

B. Economic Impact and Cost-Effectiveness

This rulemaking does not follow the normal pattern of allowing four years following the conclusion of the rule before requiring production of the new low-emitting engines. The engine manufacturers, by signing the Statement of Principles, have committed themselves to challenging, long-term design targets. This provides manufacturers fully eight years to allocate resources and conduct planning for a very thorough long-term R&D program. Manufacturers have expressed a confidence that several years of research will provide them opportunity to develop a complying engine that they can market with full confidence.

The above presentation of the range of technologies shows a good deal of promise for controlling emissions, but also makes clear that much effort remains to optimize the technologies for maximum emission-control effectiveness with minimum negative impacts on engine performance, durability, and fuel consumption. On the other hand, it has become clear that manufacturers have a great potential to advance beyond the current state of understanding by identifying aspects of the key technologies that contribute most to hardware or operational costs or other drawbacks and pursuing improvements, simplifications, or alternatives to limit those burdens. To reflect this improvement and long-term cost saving potential, the cost analysis includes an estimated $230 million (net present value in 1996) in R&D outlays for heavy-duty engine emission control over several years. The cost analysis accordingly presumes extensive improvements on the current state of technology from these future developments. The 1999 technology review provides a check on EPA's projected costs. EPA will revisit the analysis of the full life-cycle costs as part of the 1999 technology review. EPA and manufacturers will at that time confirm whether or not technology development is progressing as needed to meet the proposed emission standards.

In assessing the economic impact of changing the emission standards, EPA has made a best estimate of the combination of technologies that an engine manufacturer might use to meet the proposed standards at an acceptable cost. Full details of EPA's cost and cost-effectiveness analyses, including information not presented here, can be found in the Regulatory Impact Analysis in the public docket. The Agency invites comments on all aspects of these analyses.

Estimated cost increases are broken into purchase price and total life-cycle costs. The incremental purchase price for new engines is comprised of variable costs (for hardware and assembly time) and fixed costs (for R&D, retooling, and certification). Total life-cycle costs factor in an additional estimate for operating costs attributable to any increased maintenance or fuel consumption. Cost estimates based on these projected technology packages represent an expected incremental cost of engines in the 2004 model year. Costs in subsequent years would be reduced by several factors, as described below. Separate projected costs were derived for engines used in three service classes of heavy-duty diesel engines. Cost estimates are presented for all gasoline heavy-duty vehicles as a single group. All costs are presented in 1996 dollars. Life-cycle costs have been discounted to the year of sale. Diesel engine costs are considered first, followed by gasoline engines.

1. Costs for Diesel Engines

The following discussion provides a description and estimated costs for those technologies EPA believes will be needed to comply with the proposed emission standards. It is difficult to make a distinction between technologies that are needed to reduce NO_X emissions for compliance with 2004 model year standards and those technologies that offer other benefits for improved fuel economy and engine performance or for better control of particulate emissions. EPA believes that manufacturers, in the absence of 2004 model year standards, would continue research on and eventually deploy numerous technological upgrades to improve engine performance or more cost-effectively control emissions. EPA therefore believes that a small set of technologies represent the primary changes manufacturers must make to meet the proposed 2004 model year standards. Other technologies applied to heavy-duty engines, before or after implementation of new emission standards, will make relatively minor positive contributions to controlling NO_X emissions and are therefore considered secondary improvements for this analysis. In this category are design changes such as improved oil control, variable-geometry turbochargers, optimized catalyst designs, and variable-valve timing. Lean NO_X catalysts are also considered here to be secondary technologies, not because NO_X control is an incidental benefit, but rather because it appears unlikely that they will be part of 2004 model year technology packages. Modifications to fuel injection systems will also continue independently of new standards, though some further development with a focus on reducing NO_X emissions would be evaluated.

Several technological improvements are projected for complying with the proposed 2004 model year emission standards. Selecting this package of technologies requires extensive engineering judgment. The fact that manufacturers have nearly a full decade before implementation of the proposed standards virtually ensures that the technologies used to comply with the proposed emission standards will develop significantly before reaching production. This ongoing development will lead to reduced costs in three ways. First, research will lead to enhanced effectiveness for individual technologies, allowing manufacturers to use simpler packages of emission control technologies than we would predict given the current state of development. Similarly, the continuing effort to improve the emission control technologies will include innovations that allow lower-cost production. Finally, manufacturers will focus research efforts on any drawbacks, such as increased fuel consumption or

maintenance costs, in an effort to minimize or overcome any potential negative effects.

A combination of primary technology upgrades are anticipated for the 2004 model year. Achieving very low NO_X emissions will require basic research on reducing in-cylinder NO_X and HC. Modifications to basic engine design features can be used to improve intake air characteristics and distribution during combustion. Manufacturers are also expected to utilize upgraded electronics and advanced fuel-injection techniques and hardware to modify various fuel injection parameters, including injection pressure, further rate shaping and some split injection. EPA also expects that many engines will incorporate light-load EGR.

If not developed and implemented properly, EGR has the potential to increase operating costs, either by increasing fuel consumption or requiring additional maintenance to avoid accelerated engine or component wear. While it is possible to develop scenarios and estimate the impact on operating costs of current diesel EGR concepts, this is of minimal value due to the expected continuing development of these technologies. Nevertheless, EPA has assessed the potential for increased operating costs, as described below, first for EGR-related maintenance, then for fuel economy. EPA understands that manufacturers will make a great effort to minimize any potential new maintenance burden for the end user, investing in research to design an engine acceptable to users. The cost to address the durability concern is therefore included not as a maintenance item, but as a fixed cost. The analysis includes a separate maintenance cost for EGR systems—EPA expects engine rebuilding will include preventive maintenance to clean or replace EGR components.

With respect to fuel economy, several of the secondary technologies described below may lead to cost savings, while EGR has the potential to incur a fuel economy penalty. As with potential new maintenance cost burdens, EPA believes manufacturers will focus their research efforts on overcoming any negative impact on fuel economy caused by EGR. In any case, it is not clear at this stage of development that the set of changes resulting from the proposed emission standards will have any net negative impact on fuel economy; additional fuel costs are therefore not included in the cost analysis.

Meeting the proposed NO_X+NMHC standard will somewhat increase the challenge to control particulate emissions. Manufacturers might use a number of different technologies to maintain control of particulate emissions; however, EPA believes that the fuel system improvements described above will be sufficient to prevent any potential particulate-emission increase. In fact, manufacturers are attempting to lessen the cost of meeting current particulate emission standards over the next several years by decreasing their reliance on catalysts. This underscores EPA's belief that 2004 model year engines will be able to control particulate emissions without major technological innovation.

The costs of these new technologies for meeting the proposed standards are itemized in the Regulatory Impact Analysis and summarized in Table 6. For light heavy-duty vehicles, the incremental cost of a new 2004 model year engine is estimated to be $185, with no additional operating costs. For medium heavy duty vehicles the new engine purchase price is estimated to increase by $327, with total life-cycle costs of $371. Similarly, for heavy heavy-duty engines, initial purchase price is expected to increase by $403, while total life-cycle cost estimates reach $499.

For the long term, EPA has identified various factors that would cause cost impacts to decrease over time. First, the analysis incorporates the expectation that manufacturers will apply ongoing research to making emission controls more effective and less costly over time. This expectation is similar to manufacturers' stated goal of decreasing their reliance on catalysts to meet emission standards in the future. Research in the costs of manufacturing has consistently shown that as manufacturers gain experience in production, they are able to apply innovations to simplify machining and assembly operations, use lower cost materials, and reduce the number or complexity of component parts.[51] The analysis incorporates the effects of this learning curve by projecting that the variable costs of producing the low-emitting engines decreases by 20 percent starting with the third year of production (2006 model year) and by reducing variable costs again by 20 percent starting with the sixth year of production. Finally, since fixed costs are assumed to be recovered over a five-year period, these costs disappear from the analysis after the first five model years. Table 6 lists the projected schedule of costs for each category of vehicle over time.

TABLE 6.—PROJECTED DIESEL ENGINE COSTS

[1995 dollars discounted to year of sale]

Vehicle class	Model year	Purchase price	Life-cycle operating cost	Total life-cycle cost
Light heavy-duty	2004	185	0	185
	2009 and later	68	0	68
Medium heavy-duty	2004	327	44	371
	2009 and later	101	44	145
Heavy heavy-duty	2004	403	96	499
	2009 and later	148	96	243

2. Costs for Gasoline Engines

The cost analysis for gasoline engines follows the same methodology as for diesel engines, though with significantly less complexity due to the expectation that the technological development needed to meet the proposed standards will not be so far-reaching as for diesel engines. The same kinds of costs are considered for gasoline engines. Because the technologies require changes to existing technologies without affecting the assembly time, no increase in assembly costs are anticipated. Also, the improvements to gasoline engine technologies will not affect fuel economy or in-use maintenance; therefore, no incremental fuel or maintenance costs are anticipated.

Gasoline engines and vehicles need a much different set of changes to meet the proposed emission standards than do diesel engines. Much of the very extensive development work done for

[51] "Learning Curves in Manufacturing," Linda Argote and Dennis Epple, Science, February 23, 1990, Vol. 247, pp. 920–924.

passenger cars can, with appropriate adaptations, be applied to heavy-duty engines. The technology projections for heavy-duty gasoline engines therefore depend in part on the experience with light-duty trucks, as well as on the current view of technology developments for the heavy-duty applications themselves.

More sophisticated control of EGR flow rates over the various operating modes may allow more aggressive use of EGR to better control NO_X emissions. Ongoing developments show that three-way catalysts can be made with modified washcoats and configured in the vehicle in ways that significantly improve their effectiveness at controlling both NO_X and HC emissions. Some basic engine modifications may also be needed to fine-tune emission control and operating performance.

Since no operating costs for fuel economy or maintenance are expected for gasoline engines, all the costs translate into an increased purchase price of the engine or vehicle. The 2004 model year cost estimate for an average heavy-duty gasoline vehicle is $162. Costs can be reduced with continuing production experience, as described for diesel engines; variable costs are reduced by 20 percent only one time though, because the changes to gasoline engines are considered to be of a smaller magnitude. The resulting cost calculation for 2009 and later model year heavy-duty gasoline vehicles is $101 (Table 7).

TABLE 7.—PROJECTED GASOLINE ENGINE COSTS

[1995 dollars discounted to year of sale]

Model year	Purchase price	Life-cycle operating cost	Total life-cycle cost
2004	162	0	162
2009 and later	101	0	101

3. Aggregate Costs to Society

The above analysis develops per-vehicle cost estimates for each vehicle class. Using current data for the size and characteristics of the heavy-duty vehicle fleet and making projections for the future, these costs can be used to estimate the total cost to the nation for the proposed emission standards in any year. The result of this analysis is a projected total cost starting at $300 million in 2004. Per-vehicle costs savings over time reduce projected costs to a minimum value of $136 million in 2009, after which the growth in truck population leads to increasing costs that reach $186 million in 2020. Total costs for these years are presented by vehicle class in Table 8. The calculated total costs represent a combined estimate of fixed costs as they are allocated over fleet sales, variable costs assessed at the point of sale, and operating costs as they are incurred in each calendar year.

TABLE 8.—ESTIMATED ANNUAL COSTS FOR IMPROVED HEAVY-DUTY VEHICLES

[millions of dollars]

Category	2004	2009	2020
Light Heavy-Duty Diesel	51	23	26
Medium Heavy-Duty Diesel	71	22	34
Heavy Heavy-Duty Diesel	97	37	62
Gasoline	81	55	64
Total	300	136	186

As described in Section X below, EPA expects that complying with the proposed emission standards will not result in a significant impact on a substantial number of small entities.

4. Cost-effectiveness

EPA has estimated the per-vehicle cost-effectiveness (i.e., the cost per ton of emission reduction) of the proposed NO_X plus NMHC standard over the typical lifetime of heavy-duty diesel and heavy-duty gasoline vehicles. The RIA contains a more detailed discussion of the cost-effectiveness analyses. EPA requests comments on all aspects of the cost-effectiveness analyses, including, for example, the appropriateness of the scope of benefits and costs which EPA considered.

EPA has examined the cost-effectiveness by two different methodologies. The first methodology yields a nationwide cost-effectiveness in which the total cost of compliance is divided by the nationwide emission benefits. The second methodology yields a regional ozone strategy cost-effectiveness in which the total cost of compliance is divided by the emission benefits attributable to the regions that impact ozone levels in ozone nonattainment areas.[52] EPA requests comments on the methodologies used to determine cost-effectiveness in this analysis.

In addition to the benefits of reducing ozone within and transported into urban ozone nonattainment areas, the NO_X reductions from the proposed new engine standards are expected to have beneficial impacts with respect to crop damage, secondary particulate, acid deposition, eutrophication, visibility, and forests, as described above. Due to the difficulty in estimating the monetary value of these societal benefits, the cost-effectiveness analysis does not assign any numerical value to these additional benefits. It should be emphasized that the Agency believes that the actual monetary value of the multiple environmental and public health benefits produced by the large NO_X reductions under this proposal is likely to be much higher than the estimated regulatory costs. To the extent possible, EPA plans to take into consideration the value of these additional benefits in analyzing the cost-effectiveness of the standards for the final rulemaking. EPA requests comment on including these benefits in an estimate of the cost-effectiveness of the proposed standards.

As described above in the cost section, the cost of complying with the proposed standards will vary by model year. Therefore, the cost-effectiveness will also vary from model year to model year. For comparison purposes, the discounted costs, emission reductions and cost-effectiveness of the proposed standards are shown in Table 9 for the same model years discussed above in the cost section. The cost-effectiveness results contained in Table 9 present the range in cost-effectiveness resulting from the two cost-effectiveness scenarios described above.

[52] The RIA contains a detailed description of areas included in the regional control strategy.

TABLE 9.—DISCOUNTED PER-VEHICLE COSTS, EMISSION REDUCTIONS AND COST-EFFECTIVENESS OF THE PROPOSED NO_X and NMHC Standards

Vehicle class	Model year	Discounted lifecycle cost	Discounted lifetime reductions (tons)		Discounted cost-effectiveness ($/ton)
			NO_X	NMH	
Heavy-duty diesel vehicles	2004	$333	1.321	0.019	$200–$300
	2009+	143	.....	.....	100
Heavy-duty gasoline vehicles	2004	162	0.190	0.011	800–900
	2009+	101	.....	.....	500–600

VI. Potential for Use of Additional Incentive-based Approaches

When considering how to achieve the greatest emission reductions possible, a broad variety of options must be evaluated. On one end of the continuum are mandatory standards, which generally provide the strongest mechanism to produce cleaner engines. At the other end of the continuum are voluntary programs, where engine manufacturers and users are not required to make or use cleaner engines, but are strongly encouraged to do so. The proposed actions described in Section IV above include elements of both mandatory programs (emissions standards and durability-related requirements), as well as voluntary provisions (enhancements to the averaging banking and trading program). Voluntary programs can also be used to allow manufacturers and users maximum flexibility in finding the most cost effective ways to adopt new standards.

In the following sections, EPA describes additional voluntary programs that might facilitate the introduction of cleaner heavy-duty engines. These are voluntary labeling (''green star'') programs, and emission reduction credit generation under various state-run credit programs (including scrappage buy-back and open market trading). While EPA is not proposing these programs in today's NPRM, EPA is soliciting comments on their applicability and potential usefulness.

A. Voluntary Labeling

One type of economic incentive program is environmental labeling, or ''green'' labeling. While ''green'' labeling is very closely linked to environmental marketing, it most often involves setting voluntary standards and encouraging industry to adopt them based on their intrinsic value to the common good, as well as individual companies. In a voluntary labeling program benefits can be direct or indirect. Some voluntary labeling programs may confer direct economic benefits (savings), for example, in the form of reduced energy costs. An example of this is EPA's Green Lights and Energy Star programs. Other voluntary labeling programs may confer only indirect benefits on companies that offset emission control costs by providing some other intangible benefit, such as positive publicity, public goodwill, or improved efficiency.

Although EPA is not proposing a voluntary environmental labeling program in this document, EPA is requesting comments on a three-component labeling concept called the Green Star Engines Program. The program would seek to identify cleaner engines and classify products that could be marketed as ''green.'' This would provide positive publicity and, potentially, economic incentives. These, in turn, could help encourage engine manufacturers to market cleaner engines and encourage truckers and other users to purchase those cleaner engines.

The first part of the program would focus on identifying engines that meet the emission standards contained in today's proposal earlier than required. The second would also focus on early compliance, but with intermediate standards which are between pre-2004 levels and those being proposed today. The third part of the program would concentrate on identifying engines that can meet or exceed the emissions standard with the use of alternative fuels. Engine manufacturers benefit from the public good will created as they demonstrate a commitment to work cooperatively with other stakeholders to improve air quality. In addition, producers of alternative fuels would have additional opportunities to enter the transportation energy market.

As described further below, engines falling under any of the three parts of the program would be identified with an appropriate engine label. Trucks equipped with such engines would also be labeled. In the case of the truck labels, it might be desirable to include a commitment to advanced maintenance practices on the part of the truck owner as a condition of displaying the label. EPA envisions that this could be a cooperative program between the federal or state government and truck owners/operators. Participants would sign a letter of commitment to establish specified maintenance programs and maintenance technician training programs. They would then be recognized as members of the program and provided with labels to affix to their trucks. The supervising agency, either EPA or some other entity, would be responsible for ascertaining that truck owner/operators have the systems in place to comply with the maintenance requirements. Also, the commitment would have to be renewed periodically to insure that the relevant trucks are performing as required.

EPA solicits comment as to the practicality and potential effectiveness of all aspects of this program, as well as whether and how the three aspects of the program could be used simultaneously, as further discussed below.

EPA anticipates that a broad range of interested stakeholders would wish to participate in the Green Star Programs described in more detail below. Interested stakeholders would participate as either a Partner or Supporter. A Partner would be defined as an individual or entity that either manufactures or uses the Green Star Product and thus has a greater stake in the program outcome. A Supporter would assist in making the program successful through public education efforts and by providing positive publicity.

1. Green Star Engine Program: Early Compliance with Certification Standards

The first labeling program about which EPA is requesting comment would identify those heavy-duty engines which meet the federal heavy-duty certification standards prior to the required implementation date. All such engines would be identified with the Green Star Engine Label. Trucks that are equipped with Green Star engines would also be identified with the Green Star Engine Label.

The identification of heavy-duty engines, trucks, and equipment that meet a more protective standard would serve to visually inform users, states, interested parties, and the general public of the specific heavy-duty engines, and consequently the trucks and other heavy-duty equipment, which meet more protective emission standards. For example, heavy-duty engines which meet the 1998 NO_X standard before 1998 could be labeled with a Green Star Engine label, until those standards become mandatory. After those standards are mandatory, but prior to the implementation to the 2004 heavy-duty standard, heavy-duty engines that meet the 2004 standards could be labeled with the Green Star Engine label. This program would be intended to encourage the early introduction of cleaner heavy-duty engines, the idea being that early users would draw some publicity benefits from using these engines. Engine manufacturers would benefit from being able to use the Green Star Engine label as a sales tool. Comments are invited on whether EPA should propose the early compliance labeling program, and if it should, how the program should be structured.

2. Green Star Engine: Intermediate Standards Program

Engines which might meet a more stringent intermediate standard than what would be required by regulation could be identified with the Green Star Engine intermediate label. The intermediate label would identify engines (and trucks equipped with those engines) as cleaner than the current standard but not as clean as the future standard. For example, such an engine might meet a 2.5–3.0 g/bhp-hr NO_X standard between 1998 and 2004 or meet a 1–1.5 gram NO_X standard after 2004. For the 2004 case, it may be desirable to have a somewhat higher cut point initially, and then lower it over time. Engines certified to meet an intermediate standard would be demonstrating more advanced technology options than other engines.

The Agency would expect that advantages similar to the early certification program would accrue for any potential participants. Of course, the intermediate standards component of the Green Star Engine labeling program would not accrue the same level of potential air quality benefit as the early certification component described above because the emission standards would not be as stringent. EPA requests comments on the feasibility of developing an intermediate standard labeling program. Commenters supporting a proposal are also asked to comment on the appropriateness of using a 3g/bhp-hr NO_X level as a cut-point for the 1998 to 2004 time period, as well as an appropriate cut point, or points, for 2004 and later.

3. Green Star Alternative Fuel Engines

Under this component of the program, all engines which meet or exceed the 1998 or 2004 standards by using alternative fuels would be identified with a Green Star Alternative fuel engine label. Trucks using those engines would also be labeled. The primary purpose would be to encourage the use of alternative fuels by identifying the engines/trucks which meet or exceed the proposed emission standards by utilizing alternative fuels (such as CNG, methanol, or LPG) as their energy source. The use of alternative fuels can bring additional benefits, such as reduced green house gas emissions, not available with conventional fuels. Alternative fuels could be included in the labeling program in conjunction with either of the other two components of the Green Star Engine program. EPA requests that comments be submitted regarding the usefulness and practicality of an alternative fuel engine labeling program. The Agency also asks that comments be submitted on the logistical aspects of a labeling program for such an approach.

B. Emission Reduction Credit Programs

A third type of economic incentive program involves generating and trading emission reduction credits. This type of incentive could be used by those states that have adopted economic incentive programs in their State Implementation Plan, and would be subject to the details of those programs. Where they are available, these programs could provide an incentive for engine manufacturers and truck operators to undertake emission reduction efforts beyond those required since states may allow such emission sources to generate and sell emission reduction credits to other entities such as stationary sources. Alternatively, the generator of the credits could retain them for use or sale in the future. The purchaser of the credits would typically use the credits to offset their own emission reduction requirements and therefore the credits may not of themselves reduce overall emissions. Another option available in credit programs is for the purchaser to retire the credits to benefit the environment instead of using them to offset emission reduction requirements. Retiring credits would result in an overall reduction in emissions. Credits programs could lower the overall cost of emission reductions by allowing for more cost effective emissions controls to be used on some emissions sources instead of less cost effective controls on other sources. Additionally, credits programs may encourage technology advances that may have broad applications, which could help lower overall emissions in the future.

There are two important credit trading programs of this kind: the Economic Incentive Program (EIP) and the proposed Open Market Trading Rule (OMTR) (60 FR 39668, August 3, 1995). Generally, the EIP is more stringent than the proposed OMTR in that it requires state approval for trades before they occur. However, these programs are similar in that they require credits to be surplus (beyond required emissions reductions), quantifiable, and enforceable.

Because credits must be surplus, engines generating credits for use in EPA's averaging, banking, and trading (ABT) program cannot also generate marketable emission reduction credits, based on those same emission reductions, to be used in the credit trading programs. That is, a truck operator cannot generate emission reduction credits based on the difference between the emissions level of the engine and the standard if that engine is generating credits for use by the manufacturer in the ABT program. EPA believes that some manufacturers may choose to pass credit ownership to purchasers of clean engines rather than using the credits themselves under the ABT program. EPA believes that in some circumstances this could well be appropriate and consistent with the intent of the ABT regulations. Further discussion is provided in section III.B.3. above.

Depending on the state program, truck operators may be able to generate credits in ways other than purchasing cleaner-than-required engines. For example, credits might be able to be generated through operational changes, maintenance changes, or changes in activity levels. Credits might also be earned through buy-back programs, commonly known as scrappage programs. Buy-back programs typically involve giving financial incentives to vehicle owners in exchange for the voluntary scrapping of their older-technology, higher-emitting engines or vehicles. Buy-back programs might also be used for helping an area achieve an air quality goal rather than to generate emission reduction credits to be sold in an emission trading program (for example, in the proposed Open Market Trading Rule). Typically, any credits earned in buy-back programs are earned

by those purchasing and retiring the old vehicles or engines. As long as the emission benefits that result can be reliably quantified and meet the requirements of the relevant state credit program, such activities could be used to generate emission reduction credits.

VII. Public Participation

As mentioned above, EPA issued an Advance Notice of Proposed Rulemaking (ANPRM) announcing EPA's intent to formally propose regulatory action relating to HDE emissions, including today's action on highway HDEs. During the development of the ANPRM and after its publication, EPA received a wide range of early comments on the basic framework of such a program. By the time of the close of the comment period, the Agency had received more than 60 communications relating to this program and the ANPRM. These comments have been very valuable in developing today's proposal, and the Agency looks forward to additional comment as the formal rulemaking process now begins.

As described in part in the discussions above, comments ranged from those strongly opposing new highway HDE emission standards like those proposed today to those strongly supportive of such new standards or of standards even more stringent. Commenters offered widely varying rationales for their suggestions, including the availability or nonavailability of cost effective engine technology or the degree of need for new NO_X and PM control. To the extent possible, EPA has considered each of the comments relevant to highway HDE emissions and has accommodated them in this proposal. (Comments relating to other potential parts of an overall program that are not proposed today, including regulations affecting fuels or nonroad engines, are under consideration by the Agency as it contemplates what action it may pursue in these areas in the future.) To the extent commenters on the ANPRM believe EPA failed to address their ANPRM comments adequately in this proposal, they should offer them again as comments to this NPRM for consideration in this rulemaking.

A. Comments and the Public Docket

EPA today opens a formal comment period for this NPRM and will accept comments through August 26, 1996. The Agency encourages all parties that have an interest in the program proposed today to offer comment on all aspects of this action. Throughout this proposal are requests for specific comment on various topics. Of particular interest to the Agency are detailed comments in the following areas: The air quality need for national or regional NO_X, PM, and VOC control; the need for control of emissions from highway HDEs; EPA's proposed approaches to encouraging durability and revising the Averaging, Banking, and Trading program; the technological feasibility of the proposed standards; EPA's projections of the environmental and economic impacts of the proposed program; and non-regulatory methods of encouraging early compliance or cleaner-than-required engines.

The most useful comments are those supported by appropriate and detailed rationales, data, and analyses. The Agency also encourages commenters that disagree with the proposed program to suggest and analyze alternate approaches to meeting the air quality goals of this proposed program. All comments, with the exception of proprietary information, should be directed to the EPA Air Docket Section, Docket No. A–95–27 before the date specified above.

Commenters who wish to submit proprietary information for consideration should clearly separate such information from other comments by (1) labeling proprietary information ''Confidential Business Information'' and (2) sending proprietary information directly to the contact person listed (see **FOR FURTHER INFORMATION CONTACT**) and not to the public docket. This will help ensure that proprietary information is not inadvertently placed in the docket. If a commenter wants EPA to use a submission of confidential information as part of the basis for the final rule, then a nonconfidential version of the document that summarizes the key data or information should be sent to the docket.

Information covered by a claim of confidentiality will be disclosed by EPA only to the extent allowed and in accordance with the procedures set forth in 40 CFR part 2. If no claim of confidentiality accompanies the submission when it is received by EPA, it will be made available to the public without further notice to the commenter.

B. Public Hearing

The Agency will hold a public hearing as noted in the DATES section above. Any person desiring to present testimony at the public hearing is asked to notify the contact person listed above at least five business days prior to the date of the hearing. This notification should include an estimate of the time required for the presentation of the testimony and any need for audio/visual equipment. EPA suggests that sufficient copies of the statement or material to be presented be available to the audience. In addition, it is helpful if the contact person receives a copy of the testimony or material prior to the hearing.

The hearing will be conducted informally, and technical rules of evidence will not apply. A sign-up sheet will be available at the hearing for scheduling the order of testimony. A written transcript of the hearing will be prepared. The official record of the hearing will be kept open for 30 days after the hearing to allow submittal of supplementary information.

In addition to the public hearing, EPA will hold a public meeting in Los Angeles to discuss the proposed EPA regulations for HDEs, and receive informal public input on them. Other potential mobile source controls identified in the California Ozone State Implementation Plan for the South Coast (the greater Los Angeles area) will also be discussed.[53] Further details on the public meeting may be found in the DATES section at the beginning of this document. Because this public meeting is intended to be an informal exchange of information, a transcript of the meeting will not be prepared and members of the public who wish to present comments at the Los Angeles meeting should be aware that, in order to be considered for the final promulgation, their comments must also be made either in writing to the rulemaking docket or at the public hearing.

VIII. Statutory Authority

Section 202(a)(3) authorizes EPA to establish emissions standards for new heavy-duty motor vehicle engines. See 42 U.S.C. 7521(a)(3). These standards are to reflect the greatest reduction achievable through the application of technology which the Administrator determines will be available, giving appropriate consideration to cost, energy, and safety factors associated with the application of such technology. This provision also establishes the lead time and stability requirements for these standards, and in addition authorizes EPA to establish requirements to control rebuilding practices for heavy-duty engines. Pursuant to Sections 202(a)(1) and 202(d), these emissions standards

[53] The 1994 California Ozone SIP includes both the proposed national HDE measure and 3 proposed State measures for HDEs. The California Ozone SIP also includes other national mobile source measures for nonroad engines, ships, aircraft, and pleasure craft as components of the attainment demonstration for the South Coast nonattainment area. For further details on the California Ozone SIP, see 61 FR 10920–10962 (March 18, 1996).

apply for the useful life period established by the Agency. See 42 U.S.C. 7521(a)(1), 7521(d). EPA's authority to issue a certificate of conformity upon payment of a non-compliance penalty established by regulations is found in Section 206(g) of the Act. See 42.U.S.C. 7525(g). Other provisions of Title II of the Act, along with Section 301, are additional authority for the measures proposed in this action.

IX. Administrative Designation and Regulatory Analysis

Under Executive Order 12866 (58 FR 51735 (Oct. 4, 1993)), the Agency must determine whether this regulatory action is ''significant'' and therefore subject to OMB review and the requirements of the Executive Order. The order defines ''significant regulatory action'' as any regulatory action that is likely to result in a rule that may:

(1) Have an annual effect on the economy of $100 million or more or adversely affect in a material way the economy, a sector of the economy, productivity, competition, jobs, the environment, public health or safety, or State, local, or tribal governments or communities;

(2) Create a serious inconsistency or otherwise interfere with an action taken or planned by another agency;

(3) materially alter the budgetary impact of entitlements, grants, user fees, or loan programs or the rights and obligations of recipients thereof; or,

(4) raise novel legal or policy issues arising out of legal mandates, the President's priorities, or the principles set forth in the Executive Order.

Pursuant to the terms of Executive Order 12866, EPA has determined that this proposal is a ''significant regulatory action'' because the proposed standards and other regulatory provisions, if implemented, would have an annual effect on the economy in excess of $100 million. A Regulatory Impact Analysis has been prepared and is available in the docket associated with this rulemaking. This action was submitted to the Office of Management and Budget (OMB) for review as required by Executive Order 12866. Any written comments from OMB and any EPA response to OMB comments are in the public docket for this proposal.

X. Impact on Small Entities and Compliance With Regulatory Flexibility Act

The Regulatory Flexibility Act of 1980 requires federal agencies to identify potentially adverse impacts of federal regulations upon small entities. In instances where significant impacts are possible on a substantial number of these entities, agencies are required to perform a Regulatory Flexibility Analysis.

EPA certifies that the new emission standards and other related provisions proposed in this action will not have a significant impact on a substantial number of small entities, since none of the engine manufacturers affected by these regulations is a small business entity.

This action also proposes provisions clarifying what would and would not be considered a prohibited act (tampering) under CAA Section 203 during the heavy-duty engine rebuilding process. Small businesses are integral to the heavy-duty engine rebuilding industry as noted in comments provided by the Automotive Engine Rebuilders Association.[54] However, EPA does not believe that the proposals related to engine rebuilding will have a significant impact on a substantial number of these small entities. EPA is proposing to define how a broad existing requirement (CAA Section 203) applies specifically to the process of rebuilding engines, but EPA is not creating a new program. Second, during the development of the proposal EPA consulted with the Engine Manufacturers Association, the Automotive Engine Rebuilders Association, and the Production Engine Rebuilders Association, associations which together represent a substantial portion of the engine rebuilding and related businesses. These organizations did not raise concerns that the proposal may have a significant impact on small businesses. EPA requests comments on the proposals regarding engine rebuilding, any significant effect that the proposals would have on small businesses, and the reasons why such effects might occur.

XI. Compliance With Paperwork Reduction Act

The information collection requirements in this proposed rule have been submitted for approval to the Office of Management and Budget (OMB) under the Paperwork Reduction Act, 44 U.S.C. 3501 *et seq.* An Information Collection Request (ICR) document has been prepared by EPA (ICR No. 783.35) and a copy may be obtained from Sandy Farmer, Regulatory Information Division' U.S. Environmental Protection Agency (2136); 401 M St., SW., Washington, DC 20460 or by calling (202) 260–2740.

The information we propose to collect includes certification results, durability, maintenance, and averaging, banking and trading information. This information will be used to ensure compliance with and enforce the provisions in this rule. Section 208 (a) of the CAA requires that manufacturers provide information the Administrator may reasonably require to determine compliance with the regulations, therefore submission of the information is mandatory. EPA will consider confidential all information which meets the requirements of § 208 (c) of the CAA.

EPA estimates the average first year hours burden per response to be 4,670, the proposed frequency of response to be annual, and the estimated number of likely respondents to be twenty. EPA estimates the aggregate first year hours burden to be 93,410. EPA estimates the annual first year cost to be $5,603,280, including the annualized capital and start-up costs. Subsequent year burdens are estimated to be one-tenth of the first year estimates due to the practice of engine family carry-over from model year-to-model year. Burden means the total time, effort, or financial resources expended by persons to generate, maintain, retain, or disclose or provide information to or for a Federal agency. This includes the time needed to review instructions; develop, acquire, install, and utilize technology and systems for the purposes of collecting, validating, and verifying information, processing and maintaining information, and disclosing and providing information; adjust the existing ways to comply with any previously applicable instructions and requirements; train personnel to be able to respond to a collection of information; and transmit or otherwise disclose the information.

An Agency may not conduct or sponsor, and a person is not required to respond to a collection of information unless it displays a currently valid OMB control number. The OMB control numbers for EPA's regulations are listed in 40 CFR Part 9 and 48 CFR Chapter 15.

Comments are requested on the Agency's need for this information, the accuracy of the provided burden estimates, and any suggested methods for minimizing respondent burden, including through the use of automated collection techniques. Send comments on the ICR to the Director, OPPE Regulatory Information Division; U.S. Environmental Protection Agency (2136); 401 M St., S.W.; Washington, DC 20460; and to the Office of Information and Regulatory Affairs, Office of Management and Budget, 725 17th St., NW., Washington, DC 20503, marked ''Attention: Desk Officer for EPA.''

[54] EPA Docket A–95–27, II–D–41.

Include the ICR number in any correspondence. Since OMB is required to make a decision concerning the ICR between 30 and 60 days after June 27, 1996, a comment to OMB is best assured of having its full effect if OMB receives it by July 29, 1996. The final rule will respond to any OMB or public comments on the information collection requirements contained in this proposal.

XII. Unfunded Mandates Reform Act

Title II of the Unfunded Mandates Reform Act of 1995 (UMRA), P.L. 104–4, establishes requirements for Federal agencies to assess the effects of their regulatory actions on State, local, and tribal governments and the private sector. Under section 202 of the UMRA, EPA generally must prepare a written statement, including a cost-benefit analysis, for proposed and final rules with ''Federal mandates'' that may result in expenditures to state, local, and tribal governments, in the aggregate, or to the private sector, of $100 million or more for any one year. Before promulgating an EPA rule for which a written statement is needed, section 205 of the UMRA generally requires EPA to identify and consider a reasonable number of regulatory alternatives and adopt the least costly, most cost effective, or least burdensome alternative that achieves the objectives of the rule. The provisions of section 205 do not apply when they are inconsistent with applicable law. Moreover, section 205 allows EPA to adopt an alternative other than the least costly, most cost effective, or least burdensome alternative if the Administrator publishes with the final rule an explanation of why that alternative was not adopted. Before EPA establishes any regulatory requirements that may significantly or uniquely affect small governments, including tribal governments, it must have developed under section 203 of the UMRA a small government agency plan. The plan must provide for notifying potentially affected small governments, enabling officials of affected small governments to have meaningful and timely input in the development of EPA regulatory proposals with significant federal intergovernmental mandates, and informing, educating, and advising small governments on compliance with the regulatory requirements.

Today's rule contains no Federal mandates (under the regulatory provisions of Title II of the UMRA) for State, local, or tribal governments. The rule imposes no enforceable duties on any of these governmental entities. Nothing in the proposed program would significantly or uniquely affect small governments. EPA has determined that this rule contains federal mandates that may result in expenditures of $100 million or more in any one year for the private sector. EPA believes that the proposed program represents the least costly, most cost-effective approach to achieving the air quality goals of the proposed rule. EPA has performed the required analyses under Executive Order 12866 which contains identical analytical requirements. The reader is directed to section IX, Administrative Designation and Regulatory Analysis, for further information regarding these analyses.

XIII. Copies of Rulemaking Documents

The preamble, draft regulatory language and draft Regulatory Impact Analysis (RIA) are available in the public docket as described under **ADDRESSES** above and is also available electronically on the Technology Transfer Network (TTN), which is an electronic bulletin board system (BBS) operated by EPA's Office of Air Quality Planning and Standards and via the internet. The service is free of charge, except for the cost of the phone call.

A. Technology Transfer Network (TTN)

Users are able to access and download TTN files on their first call using a personal computer and modem per the following information.

TTN BBS: 919–541–5742 (1200–14400 bps, no parity, 8 data bits, 1 stop bit)
Voice Helpline: 919–541–5384
Also accessible via Internet: TELNET ttnbbs.rtpnc.epa.gov Off-line: Mondays from 8:00 AM to 12:00 Noon ET

A user who has not called TTN previously will first be required to answer some basic informational questions for registration purposes. After completing the registration process, proceed through the following menu choices from the Top Menu to access information on this rulemaking.

<T> GATEWAY TO TTN TECHNICAL AREAS (Bulletin Boards)
<M> OMS—Mobile Sources Information
<K> Rulemaking & Reporting
<5> Heavy-duty/Diesel
<1> File area #1...Heavy-duty Truck and Bus Standards

At this point, the system will list all available files in the chosen category in reverse chronological order with brief descriptions. To download a file, select a transfer protocol that is supported by the terminal software on your own computer, then set your own software to receive the file using that same protocol.

If unfamiliar with handling compressed (i.e. ZIP'ed) files, go to the TTN top menu, System Utilities (Command: 1) for information and the necessary program to download in order to unZIP the files of interest after downloading to your computer. After getting the files you want onto your computer, you can quit the TTN BBS with the <G>oodbye command.

Please note that due to differences between the software used to develop the document and the software into which the document may be downloaded, changes in format, page length, etc. may occur.

B. Internet

Rulemaking documents may be found on the internet as follow:

World Wide Web

http://www.epa.gov/omswww

FTP

ftp://ftp.epa.gov Then CD to the /pub/gopher/OMS/ directory

Gopher

gopher://gopher.epa.gov:70/11/Offices/Air/OMS
Alternatively, go to the main EPA gopher, and follow the menus:
gopher.epa.gov
EPA Offices and Regions
Office of Air and Radiation
Office of Mobile Sources

List of Subjects in 40 CFR Part 86

Environmental protection, Administrative practice and procedure, Air pollution control, Motor vehicles, Motor vehicles pollution, Reporting and recordkeeping requirements, Research.

Dated: June 19, 1996.

Carol M. Browner,

Administrator.

[FR Doc. 96–16330 Filed 6–26–96; 8:45 am]

BILLING CODE 6560–50–P

---

40 CFR Parts 180, 185 and 186

[OPP–300433; FRL–5380–9]

RIN 2070–AC18

Glyphosate; Proposed Revision of Tolerances

AGENCY: Environmental Protection Agency (EPA).

ACTION: Proposed rule.

SUMMARY: EPA has completed the reregistration process and issued a Reregistration Eligibility Decision document (RED) for the herbicide glyphosate (*N*-phosphonomethyl glycine). In the reregistration process, all information to support a pesticide's continued registration is reviewed for

adequacy and, when needed, supplemented with new scientific studies. Based on the RED tolerance assessments for glyphosate and subsequent comments, EPA is proposing to revise food and feed tolerances, food additive regulations and feed additive regulations. In addition, this document proposes to revise the tolerance expression for residues of glyphosate for all glyphosate food and feed tolerances, food additive regulations and feed additive regulations.

DATES: Written comments, identified by the docket control number OPP–300433, must be received on or before August 26, 1996.

ADDRESSES: By mail, submit comments to Public Response and Program Resources Branch, Field Operations Division (7506C), Office of Pesticide Programs, 401 M St., SW., Washington, DC 20460. In person, deliver comments to Rm. 1132, Crystal Mall #2, 1921 Jefferson Davis Highway, Arlington, VA 22202.

Comments and data may also be submitted electronically by sending electronic mail (e-mail) to: opp-docket@epamail.epa.gov. Electronic comments must be submitted as an ASCII file avoiding the use of special characters and any form of encryption. Comments and data will also be accepted on disks in WordPerfect 5.1 file format or ASCII file format. All comments and data in electronic form must be identified by the docket number OPP–300433. No Confidential Business Information (CBI) should be submitted through e-mail. Electronic comments on this proposed rule may be filed online at many Federal Depository Libraries. Additional information on electronic submissions can be found in the SUPPLEMENTARY INFORMATION section of this document.

FOR FURTHER INFORMATION CONTACT: By mail: Paul Parsons, Special Review and Reregistration Division (7508W), Environmental Protection Agency, 401 M St., SW., Washington, DC 20460. Office location, telephone number, and e-mail address: Special Review Branch, Crystal Station #1, 3rd floor, 2800 Crystal Drive, Arlington, VA. Telephone (703) 308–8037, e-mail: parsons.paul@epamail.epa.gov.

SUPPLEMENTARY INFORMATION

I. Legal Authorization

The Federal Food, Drug, and Cosmetic Act (FFDCA) [21 U.S.C. 301 et seq.] authorizes the establishment of tolerances (maximum legal residue levels) and exemptions from the requirement of a tolerance for residues of pesticide chemicals in or on raw agricultural commodities pursuant to section 408 [21 U.S.C. 346(a)]. Without such tolerances or exemptions, a food containing pesticide residues is considered to be ''adulterated'' under section 402 of the FFDCA, and hence may not legally be moved in interstate commerce [21 U.S.C. 342]. To establish a tolerance or an exemption under section 408 of the FFDCA, EPA must make a finding that the promulgation of the rule would ''protect the public health'' [21 U.S.C. 346a(b)]. To establish food additive regulations (FARs) to cover pesticide residues in processed foods under section 409 of FFDCA, EPA must determine that the proposed use of the food additive will be safe (21 U.S.C. 348). For a pesticide to be sold, distributed, and used in the production of food crops, animals, or processed food, the pesticide must not only have appropriate tolerances or FARs under the FFDCA, but also must be registered under the Federal Insecticide, Fungicide, and Rodenticide Act (FIFRA, 7 U.S.C. 136 et seq.).

In 1988, Congress amended the Federal Insecticide, Fungicide and Rodenticide Act (FIFRA) and required EPA to review and reassess the potential hazards arising from currently registered uses of pesticides registered prior to November 1, 1984. As part of this process, the Agency must determine whether a pesticide is eligible for reregistration and if any subsequent actions are required to fully attain reregistration status. EPA has chosen to include in the reregistration process a reassessment of existing tolerances or exemptions from the need for a tolerance. Through this reassessment process, EPA can determine whether a tolerance must be amended, revoked, or established, or whether an exemption from the requirement of one or more tolerances must be amended or is necessary.

The procedure for establishing, amending, or repealing tolerances or exemptions from the requirement of tolerances is set forth in the Code of Federal Regulations at 40 CFR part 177 through 180. The Administrator of EPA or any person may initiate an action proposing to establish, amend, revoke, or exempt a tolerance for a pesticide registered for food uses. Each petition or request for a new tolerance, an amendment to an existing tolerance, or a new exemption from the requirement of a tolerance must be accompanied by a fee or a request for a waiver of such fee. Current Agency policy on tolerance actions arising from the reregistration process is to administratively process some actions without requiring payment of a fee; this waiver of fees applies to revisions or revocations of established tolerances, and to proposed exemptions from the requirement of a tolerance if the proposed exemption requires the concurrent revocation of an established tolerance. Comments submitted in response to the Agency's published proposals are reviewed; the Agency then publishes its final determination regarding the specific tolerance actions.

II. Regulatory Background and Proposed Actions

A. Regulatory Background

The tolerance proposals described in this action follow the Agency's tolerance reassessment that was completed and included in the Reregistration Eligibility Decision (RED) for glyphosate dated September 1993. While the reassessment determined that many tolerances established for glyphosate are adequate and supported by sufficient data, many changes are needed to other glyphosate tolerances for various reasons, including: increasing or decreasing existing tolerances based on new data, harmonizing with CODEX when appropriate, and revising commodity terminology, Crop Group designations, and definitions that are not in accordance with the revised Crop Group Regulation (40 CFR part 180, 60 FR 26626, May 17, 1995; FRL–4939–9) or with the final 860 Series Residue Chemistry Guidelines (860.1000) published as public drafts on August 25, 1995 (60 FR 44343) (formerly Table II of Subdivision O, Residue Chemistry, of the Pesticide Assessment Guidelines). Also, this notice will correct any errors in the RED tolerance reassessment.

Several maximum residue limits (MRLs) for glyphosate have been established by the Codex Committee on Pesticide Residues, a committee within the Codex Alimentarius Commission, an international organization formed to promote the coordination of international food standards. When the Agency has sufficient data to make a determination that the risk is not unreasonable, EPA seeks to harmonize U.S. tolerances with CODEX MRLs. CODEX regulates glyphosate *per se* while the United States regulates the combined residues of glyphosate and its metabolite aminomethylphosphonic acid (AMPA). The Agency has determined that AMPA no longer needs to be regulated and therefore is proposing to delete it from the tolerance expression. Based on this determination, the expression of the U.S. tolerances and the CODEX MRLs will be the same.

This document also takes into account final tolerance actions taken subsequent

to the RED. The first of these actions was establishment of a tolerance of 25 ppm on almond, hulls, 1 ppm on the tree nuts crop group, 5 ppm on wheat, grain, 85 ppm on wheat, straw, and 20 ppm on wheat milling fractions (except flour) on July 7, 1993 (58 FR 36358). Wheat milling fractions have subsequently been renamed wheat bran, middlings, and shorts.

The second group of actions was published in the Federal Register April 5, 1996 (61 FR 15192; FRL–5351–1). That final rule established or amended tolerances for alfalfa and soybeans and their associated commodities, sunflowers, animal kidneys, and citrus fruit and associated commodities, revoked the tolerance for soybean straw, and deleted AMPA from the tolerance expression for all tolerances affected by the notice. This document proposes to include the tolerance for alfalfa forage and alfalfa hay in the tolerance for the non-grass animal feeds group, forage and hay.

This document amends 40 CFR 180.364, 185.3500, and 186.3500.

B. Proposed Actions

1. *AMPA*. The food and feed tolerances currently listed in 40 CFR 180.364(a), (b), and (c), and the food additive and feed additive regulations listed in 40 CFR 185.3500 and in 40 CFR 186.3500 are for the combined residues of glyphosate and its metabolite (AMPA) resulting from the application of glyphosate and its salts for herbicidal or plant growth regulation purposes. Upon receipt and review of additional toxicological data, EPA has determined that AMPA is no longer of toxicological concern. EPA bases this conclusion on a 90–day feeding study in rats (EPA MRID #241351) which shows the very low toxicity of AMPA. Therefore, there is no need to monitor levels of AMPA residue and EPA is proposing to delete this compound from the tolerance expression in 40 CFR 180.364(a), (b), and (c), 185.3500 and in 186.3500.

The tolerances currently listed in § 180.364(d), which were established after the issuance of the RED in September 1993, do not include AMPA in the tolerance expression. Therefore, the tolerances now in § 180.364(d) are proposed to be incorporated in § 180.364(a), and § 180.364(d) will be deleted.

2. *Negligible residue terminology*. Some tolerances currently listed under 40 CFR 180.364(a) are described as being negligible residues, denoted ''N.'' The Agency no longer uses negligible residue terminology, and so this notice proposes to delete references to negligible residues. These deletions do not change the numerical value of the tolerances. The current tolerances affected by this proposed change are grain crops (except wheat); grasses, forage; leafy vegetables; seed and pod vegetables; seed and pod vegetables, forage; and seed and pod vegetables, hay.

3. *Revisions to tolerances and food and feed additive regulations*. The RED identified the need to revise or revoke tolerances and food or feed additive regulations for glyphosate. These proposed actions are based on new data which indicate that a change is needed in the tolerance or food and feed additive regulations. When possible, EPA has sought to harmonize tolerances and food and feed additive regulations with CODEX MRLs.

The dietary risk resulting from the changes proposed in the RED do not result in an unreasonable risk. The Agency estimates chronic dietary risks for noncancer endpoints by comparing dietary exposure to the Reference Dose (RfD). The RfD is an estimate of the daily oral exposure to humans over a lifetime that is not expected to result in adverse health effects. The RfD is based on the determination of a critical effect from a review of all toxicity data and a judgment of uncertainty. In the case of glyphosate, the RfD is 2 mg/kg body weight/day, based on a no-observed effect level (NOEL) of 175 mg/kg bodyweight/day from a developmental toxicity study in rabbits, and an uncertainty factor of 100 to account for extrapolation from animal data to humans and variability in the human population. Using conservative assumptions, glyphosate residues represent 1.4 percent of the RfD.

The following sections describe the proposed substantive changes in the glyphosate tolerances and food and feed additive regulations.

a. *Food and feed tolerances: 40 CFR 180.364(a)*. i. *Commodity name changes*. EPA has changed the name of the commodity acerola to Barbados cherry, and the name of the commodity genip to marmaladebox.

ii. *Cotton forage*. EPA proposes to revoke the tolerance for cotton hay and cotton forage since these are no longer used as livestock feed items.

iii. *Forage grasses*. In accordance with the revised Crop Group Regulation (40 CFR part 180) (60 FR 26626, May 17, 1995), the grass forage, fodder, and hay group now includes all of the forage grasses for which tolerances have been established. EPA proposes to replace the established tolerances for forage grasses (0.2 ppm); grasses, forage (0.2 ppm); Bahiagrass; Bermudagrass; bluegrass; bromegrass; fescue; orchardgrass; ryegrass; timothy; and wheatgrass (all currently set at 200 ppm), with a tolerance for residues in or on the grass forage, fodder, and hay group at 100 ppm. The available field data indicate that following registered use, residues in or on the grass forage, fodder, and hay group are greater than 0.2 ppm but will not exceed 100 ppm, so the higher tolerance level of 200 ppm is unnecessary.

iv. *Kiwifruit*. EPA proposes to decrease the tolerance for kiwifruit from 0.2 ppm to 0.1 ppm. The Agency has re-examined field data to support this tolerance, and its reconsideration shows that this value will be appropriate and will harmonize with the Codex Maximum Residue Levels (MRLs).

v. *Okra*. Okra was included in the now-obsolete seed and pod vegetables crop group, which has been replaced by ''legume vegetables (succulent or dried) group.'' This new group does not include okra. Therefore, EPA proposes to establish a tolerance for okra at the same level as before, 0.2 ppm.

vi. *Root vegetables*. The Monsanto Company, sole technical registrant of glyphosate, noted that all of the representative commodities (carrot, potato, radish, and sugar beet) for the Root and Tuber Vegetables Crop Group have established tolerances at 0.2 ppm. Therefore, EPA proposes to establish a tolerance of 0.2 ppm for this Crop Group. The listings for individual commodities in this crop group (Jerusalem artichoke, garden beet, chicory root, carrot, horseradish, parsnip, potato, radish, rutabaga, salsify, sugar beet, sweet potato, turnip, and true yam), do not need to be listed separately in § 180.364(a), and so will be deleted.

vii. *Sapote*. Sapote has been a general term for a number of different tropical fruits. EPA proposes to replace the tolerance for sapote at 0.2 ppm with separate tolerances for black sapote and white sapote, already established at 0.2 ppm, and mamey sapote, also at 0.2 ppm.

viii. *Small fruits and berries*. EPA proposes to establish separate tolerances for strawberries, cranberries and grapes at 0.2 ppm. All three commodities were members of the former small fruits and berries group, which has been revised to no longer include them.

ix. *Seed and pod vegetables; legume crops*. EPA proposes to replace the existing tolerances for alfalfa (200 ppm), alfalfa fresh and hay (0.2 ppm), clover (200 ppm), and forage legumes (except soybeans and peanuts) (0.4 ppm) with a tolerance of 200 ppm for residues in or on the non-grass animal feeds (forage, fodder, straw, and hay) group, which now includes these commodities. In

establishing this group tolerance, EPA has considered field data to show that this value is appropriate. EPA also proposes to include the tolerance for alfalfa forage (75 ppm) and alfalfa hay (200 ppm), published in the Federal Register April 5, 1996 (61 FR 15192) in the non-grass animal feeds group, forage and hay (200 ppm) and to delete the individual tolerances for alfalfa forage and alfalfa hay.

EPA proposes to replace the established crop group tolerances for the now-obsolete crop group ''seed and pod vegetables'' with ''legume vegetables (succulent or dried) group (except soybeans),'' and to increase these tolerances from 0.2 ppm to 5 ppm. The Agency has considered field data to show that this value is appropriate and will harmonize with the Codex MRLs. Soybeans are excluded from the legume vegetable crop group because the use pattern for soybeans is different from other legume vegetables, resulting in higher residues. Notice of a final rule revising tolerances for soybeans and associated commodities was published in the Federal Register April 5, 1996 (61 FR 15192).

b. *Food and feed tolerances: 40 CFR 180.364(b).* EPA proposes to revoke the tolerance for peanut, hulls (shells) since these are no longer used as a livestock feed item.

EPA proposes to increase the U.S. tolerance for cattle, liver from 0.5 ppm to 2.0 ppm; and to increase the U.S. tolerance for hogs, liver from 0.5 ppm to 1.0 ppm. The Agency has considered livestock residue data to show that these values are appropriate, and will harmonize with the Codex MRLs.

c. *Food and feed tolerances: 40 CFR 180.364(c).* EPA proposes to establish a tolerance for okra at 0.1 ppm. Okra is a nonleguminous member of the now-obsolete seed and pod vegetables crop group, which has been replaced by ''legume vegetables (succulent or dried) group.'' This new group does not include okra. There are no other changes to these tolerances except in crop terminology.

d. *Food and feed tolerances: 40 CFR 180.364(d).* There are no other changes to these tolerances except in crop terminology.

e. *Food additive regulations: 40 CFR 185.3500.* There are no changes to these food additive regulations except in crop terminology.

f. *Feed additive regulations: 40 CFR 186.3500.* EPA proposes to revoke the tolerance for citrus, molasses, since this is no longer used as a livestock feed item. There are no other changes to these feed additive regulations except in crop terminology.

4. *Revising commodity definitions.* Many current glyphosate tolerances and food or feed additive regulations include commodity terminology, crop group designations or definitions that are not in accordance with the revised Crop Group Regulation (40 CFR Part 180, 60 FR 26626, May 17, 1995) or with the final 860 Series Residue Chemistry Guidelines (860.1000) published as public drafts on August 25, 1995 (60 FR 44343) (formerly Table II of Subdivision O, Residue Chemistry, of the Pesticide Assessment Guidelines). These changes in commodity terminology do not involve any change in the numerical value of the tolerance or food or feed additive regulation. The proposed amendments at the end of this document list these changes in commodity terminology.

5. *Corrections to the RED.* The RED indicated that there were no registered glyphosate products for use on many minor crops, mostly subtropical fruits and vegetables, for which there are established tolerances in § 180.364(a). Therefore, the RED noted that these tolerances should be revoked. However, the Agency has discovered that these uses are listed on current glyphosate labels, and so will not propose to revoke the associated tolerances.

The RED also indicated that the tolerances for cranberries and grapes in § 180.364(a) should be revoked, since these commodities would be included under the small fruits and berries group. On August 25, 1993, the Agency proposed to revise this crop grouping to exclude cranberries and grapes (58 FR 44990). This action would, in effect, leave cranberries and grapes with no established tolerances, so the EPA will not propose to revoke these established tolerances.

The RED also indicated that the tolerance for instant tea in § 185.3500 should be revoked, since this commodity was not listed in Table II of Subdivision O, Residue Chemistry, of the Pesticide Assessment Guidelines. However, the most recent update of Table II, from September 1995, does include instant tea as a processed commodity, so the tolerance will be retained at 1.0 ppm.

III. Comments Received in Response to RED Regarding Tolerances

The Monsanto Company made several comments in response to the RED tolerance reassessment. Monsanto commented on inconsistencies in the RED document and provided new information or clarifications regarding proposals in the RED tolerance reassessment. In most cases the Agency agreed with Monsanto and the Agency's decision is reflected in this proposal.

IV. Public Comment Procedures

Interested persons are invited to submit written comments, information, or data in response to this proposed rule. Comments must be submitted by August 26, 1996.

Information submitted as a comment concerning this document may be claimed confidential by marking any or all of that information as ''Confidential Business Information'' (CBI). Information so marked will not be disclosed except in accordance with procedures set forth in 40 CFR part 2. A copy of a comment that does not contain CBI must be submitted for inclusion in the public record. Information not marked confidential may be disclosed publicly by EPA without prior notice.

A record has been established for this proposal under docket number OPP–300433 (including comments and data submitted electronically as described below). A public version of this record, including printed, paper versions of electronic comments, which does not include any information claimed as CBI, is available for inspection from 8 a.m. to 4:30 p.m., Monday through Friday, excluding legal holidays. The public record is located in Rm. 1132 of the Public Response and Program Resources Branch, Field Operations Division (7506C), Office of Pesticide Programs, Environmental Protection Agency, Crystal Mall #2, 1921 Jefferson Davis Highway, Arlington, VA.

Electronic comments can be sent directly to EPA at:

opp-docket@epamail.epa.gov.

Electronic comments must be submitted as an ASCII file avoiding the use of special characters and any form of encryption.

The official record for this proposal, as well as the public version, as described above will be kept in paper form. Accordingly, EPA will transfer all comments received electronically into printed, paper form as they are received and will place the paper comments in the official rulemaking record which will also include all comments submitted directly in writing. The official rulemaking record is the paper record maintained at the Virginia address in ''ADDRESSES'' at the beginning of this document.

Any person who has registered or submitted an application for registration of a pesticide, under the Federal Insecticide, Fungicide, and Rodenticide Act (FIFRA) as amended, which contains any of the ingredients listed herein, may request within 30 days after

publication of this proposed rule in the Federal Register that this rulemaking proposal be referred to an Advisory Committee in accordance with section 408(e) of the FFDCA.

To satisfy requirements for analysis specified by Executive Order 12866 and the Regulatory Flexibilitys Act, EPA has considered impacts of this proposal, and determined that they will be negligible.

V. References

The following reference was used in the preparation of this final rule.

U.S. Environmental Protection Agency. Reregistration Eligibility Document (RED) Glyphosate Case 0178. September 1993.

VI. Regulatory Assessment Requirements

To satisfy requirements for analysis specified by Executive Order 12866, the Regulatory Flexibility Act, the Paperwork Reduction Act, and the Unfunded Mandates Reform Act, EPA has analyzed the impacts of this proposal.

A. Executive Order 12866

Under Executive Order 12866 (58 FR 51735, October 4, 1993), the Agency must determine whether the regulatory action is ''significant'' and therefore subject to all the requirements of the Executive Order (i.e., Regulatory Impact Analysis, review by the Office of Management and Budget (OMB)). Under section 3(f), the order defines ''significant'' as those actions likely to lead to a rule (1) having an annual effect on the economy of $100 million or more, or adversely and materially affecting a sector of the economy, productivity, competition, jobs, the environment, public health or safety, or State, local or tribal governments or communities (also known as ''economically significant''); (2) creating serious inconsistency or otherwise interfering with an action taken or planned by another agency; (3) materially altering the budgetary impacts of

entitlement, grants, user fees, or loan programs; or (4) raising novel legal or policy issues arising out of legal mandates, the President's priorities, or the principles set forth in this Executive Order.

Pursuant to the terms of this Executive Order, EPA has determined that this rule is not ''significant'' and is therefore not subject to OMB review.

B. Regulatory Flexibility Act

Pursuant to the requirements of the Regulatory Flexibility Act (5 U.S.C. 601–612), the Administrator has determined that regulations establishing new tolerances or raising tolerance levels or establishing exemptions from tolerance requirements do not have a significant economic impact on a substantial number of small entities. A certification statement explaining the factual basis for this determination was published in the Federal Register of May 4, 1981 (46 FR 24950).

C. Paperwork Reduction Act

This proposed regulatory action does not contain any information collection requirements subject to review by OMB under the Paperwork Reduction Act of 1980, 44 U.S.C. 3501 et seq.

D. Unfunded Mandates Reform Act

This action does not impose any enforceable duty, or contain any ''unfunded mandates'' as described in Title II of the Unfunded Mandates Reform Act of 1995 (Pub. L. 104–4), or require prior consultation as specified by Executive Order 12875 (58 FR 58093, October 28, 1993), entitled Enhancing the Intergovernmental Partnership, or special consideration as required by Executive Order 12898 (59 FR 7629, February 16, 1994).

List of Subjects

40 CFR Part 180

Environmental Protection, Administrative practice and procedure, Agricultural commodities, Pesticides and pests, Reporting and recordkeeping requirements.

40 CFR Part 185

Food additives, Pesticides and pest.

40 CFR Part 186

Animal feeds, Pesticides and pest.

Dated: June 20, 1996.

Lois Rossi,

Director, Special Review and Reregistration Division, Office of Pesticide Programs.

Therefore, 40 CFR, Chapter I, parts 180, 185 and 186 are proposed to be amended as follows:

PART 180—[AMENDED]

1. In Part 180:

a. The authority citation for part 180 continues to read as follows:

Authority: 21 U.S.C. 346a and 371.

b. Section 180.364 is revised to read as follows:

§ 180.364 Glyphosate, tolerances for residues.

(a) Tolerances are established for the residues of glyphosate (*N*-phosphonomethyl glycine) *per se* resulting from application of the isopropylamine salt of glyphosate and/or the monoammonium salt of glyphosate in or on the following agricultural commodities:

Commodity	Parts per million
Almond, hulls	25
Asparagus	0.5
Atemoya	0.2
Avocado	0.2
Banana	0.2
Barbados cherry	0.2
Berries group	0.2
Brassica (Cole) leafy vegetables group	0.2
Breadfruit	0.2
Bulb vegetables (Allium spp.) group	0.2
Cacao bean	0.2
Canistel	0.2
Carambola	0.2
Cereal grains group (except wheat)	0.1
Cherimoya	0.2
Citrus fruits group	0.5
Coconut	0.1
Coffee bean, green	1.0
Cotton, undelinted seed	15
Cranberry	0.2
Cucurbit vegetables group	0.2
Date	0.2
Fig	0.2
Foliage of legume vegetables group (except soybean forage and hay)	0.2
Forage, fodder, and straw of cereal grains group (except wheat straw)	0.2
Fruiting vegetables (except Cucurbits) group	0.1
Grape	0.2
Grass forage, fodder, and hay group	100
Guava	0.2
Jaboticaba	0.2
Jackfruit	0.2
Kiwifruit	0.1
Leafy vegetables (except Brassica vegetables) group	0.2
Leaves of root and tuber vegetables (human food or animal feed) group	0.2
Legume vegetables (succulent or dried) group (except soybean)	5
Longan	0.2
Lychee	0.2
Mamey sapote	0.2
Mango	0.2
Marmaladebox	0.2
Non-grass animal feeds (forage and hay) group	200
Okra	0.2
Olive	0.2
Papaya	0.2
Passion fruit	0.2
Peanut, hay	0.5
Persimmon	0.2
Pineapple	0.1
Pistachio	0.2
Pome fruits group	0.2
Pomegranate	0.2
Root and tuber vegetables	0.2
Sapodilla	0.2

Commodity	Parts per million
Sapote, black	0.2
Sapote, white	0.2
Soursop	0.2
Soybean, seed	20
Soybean, forage	100
Soybean, hay	200
Soybean, aspirated grain fractions	50
Stone fruits group	0.2
Strawberry	0.2
Sugar apple	0.2
Sunflower, seed	0.1
Tamarind	0.2
Tree nuts group	1.0
Wheat, grain	5.0
Wheat, straw	85

(b) Tolerances are established for the residues of glyphosate (*N*-phosphonomethyl glycine) *per se* resulting from application of the isopropylamine salt of glyphosate and/or the monoammonium salt of glyphosate for herbicidal and plant growth regulator purposes and/or the sodium sesqui salt for plant regulator purposes in or on the following agricultural commodities:

Commodity	Parts per million
Cattle, kidney	4.0
Cattle, liver	2.0
Fish	0.25
Goat, kidney	4.0
Goat, liver	0.5
Hog, kidney	4.0
Hog, liver	1.0
Horse, kidney	4.0
Horse, liver	0.5
Peanut	0.1
Peanut, hay	0.5
Poultry, kidney	0.5
Poultry, liver	0.5
Sheep, kidney	4.0
Sheep, liver	0.5
Shellfish	3.0
Sugarcane	2.0

(c) Tolerances are established for the residues of glyphosate (*N*-phosphonomethyl glycine) *per se* resulting from the use of irrigation water containing residues of 0.5 ppm following applications on or around aquatic sites on the following agricultural commodities. Where tolerances are established at higher levels from other uses of glyphosate in or on the subject crops, the higher tolerance should also apply to residues from the aquatic uses cited in this paragraph.

Commodity	Parts per million
Avocado	0.1
Brassica (Cole) leafy vegetables group	0.1
Bulb vegetables (Allium spp.) group	0.1
Cereal grains group	0.1
Citrus fruits group	0.1
Cotton, undelinted seed	0.1
Cucurbit vegetables group	0.1
Foliage of legume vegetables group	0.1
Forage, fodder, and straw of cereal grains group	0.1
Fruiting vegetables (except Cucurbits) group	0.1
Grass forage, fodder, and hay group	0.1
Hops	0.1
Leafy vegetables (except Brassica vegetables) group	0.1
Leaves of root and tuber vegetables (human food or animal feed) group	0.1
Legume vegetables (succulent or dried) group	0.1
Non-grass animal feeds (forage, fodder, straw, and hay) group	0.1
Okra	0.1
Pome fruits group	0.1
Root and tuber vegetables group	0.1
Stone fruits group	0.1
Tree nuts group	0.1

PART 185—[AMENDED]

2. In Part 185:

a. The authority citation for part 185 continues to read as follows:

Authority: 21 U.S.C. 346a and 348.

b. Section 185.3500 is revised to read:

§ 185.3500 Glyphosate.

(a) Food additive regulations are established for the residues of glyphosate (*N*-phosphonomethyl glycine) *per se* when present therein as a result of the herbicide application to the growing crops:

(1) Glyphosate (*N*-phosphonomethyl glycine) *per se* resulting from the application of the isopropylamine salt of glyphosate for herbicidal purposes and/or the sodium sesqui salt for plant growth regulator purposes.

Commodity	Parts per million
Sugarcane, molasses	30.0

(2) Glyphosate (*N*-phosphonomethyl glycine) *per se* resulting from the application of the isopropylamine salt of glyphosate for herbicidal purposes.

Commodity	Parts per million
Olive	0.1
Palm, oil, refined	0.1
Tea, dried	1.0
Tea, instant	7.0

(3) Glyphosate (*N*-phosphonomethyl glycine) *per se* resulting from the application of the isopropylamine salt of glyphosate or the monoammonium salt of glyphosate for herbicidal purposes.

Commodity	Parts per million
Wheat bran, middlings, and shorts	20.0

(b) [Reserved]

PART 186—[AMENDED]

3. In Part 186:

a. The authority citation for part 186 continues to read as follows:

Authority: 21 U.S.C. 348.

b. Section 186.3500 is revised to read:

§ 186.3500 Glyphosate.

A feed additive regulation is established permitting residues of glyphosate *per se* (*N*-phosphonomethyl glycine) in or on the following feed commodities from application of the isopropylamine salt of glyphosate and/or the monoammonium salt of glyphosate to the raw agricultural commodities citrus and soybeans:

Commodity	Parts per million
Citrus, pulp, dried	1.5
Soybean, hulls	100

[FR Doc. 96–16587 Filed 6–26–96; 8:45 am]

BILLING CODE 6560–50–F

FEDERAL COMMUNICATIONS COMMISSION

47 CFR Part 73

[MM Docket No. 96–120, FCC 96–236]

Grandfathered Short-Spaced FM Stations

AGENCY: Federal Communications Commission.

ACTION: Proposed rule.

SUMMARY: This *Notice of Proposed Rule Making* (NPRM) in MM Docket No. 96–120 seeks comment regarding various proposals to modify a current rule to permit certain short-spaced stations to make changes based on a showing that no interference is caused or received, or

if interference already exists, based on the total of such interference not being increased. The NPRM also proposes to permit certain stations short-spaced to a second-adjacent-channel or a third-adjacent-channel station to change transmitter location or other station facilities without regard to such short-spacing, and to eliminate the need to obtain agreements by grandfathered stations proposing increased facilities. The types of modifications that are proposed for this revised rule are expected to have no potential to increase interference to other stations.

DATES: Initial comments are due July 22, 1996; reply comments are due August 5, 1996. Written comments by the public on the proposed and/or modified information collections are due July 22, 1996. Written comments must be submitted by the Office of Management and Budget (OMB) on the proposed and/or modified information collections on or before August 26, 1996.

ADDRESSES: Office of the Secretary, Federal Communications Commission, Washington, D.C. 20554. In addition to filing comments with the Secretary, a copy of any comments on the information collections contained herein should be submitted to Dorothy Conway, Federal Communications Commission, Room 234, 1919 M Street, N.W., Washington, DC 20554, or via the Internet to dconway@fcc.gov, and to Timothy Fain, OMB Desk Officer, 10234 NEOB, 725—17th Street, N.W., Washington, DC 20503 or via the Internet to fain__t@al.eop.gov.

FOR FURTHER INFORMATION CONTACT: James Bradshaw, Mass Media Bureau, Audio Services Division, (202) 418–2720, or via the Internet at jbradsha@fcc.gov. For additional information concerning the information collections contained in the NPRM, contact Dorothy Conway at (202) 418–0217, or via the Internet at dconway@fcc.gov.

SUPPLEMENTARY INFORMATION: This is the synopsis of the Commission's *Notice of Proposed Rule Making* in MM Docket No. 96–120, adopted May 23, 1996, and released June 14, 1996.

The complete text of this NPRM, which was adopted in MM Docket No. 96–120, is available for inspection and copying during normal business hours in the FCC Reference Center (Room 239), 1919 M Street, N.W., Washington, DC, and may also be purchased from the Commission's copy contractor, International Transcription Services, Inc., at (202) 857–3800, 2100 M Street, N.W., Suite 140, Washington, DC 20037.

Synopsis of Order and Notice of Proposed Rule Making

1. In the NPRM, the Commission seeks comment regarding various proposals to streamline the Commission's rules specifically dealing with modifications of commercial FM stations that became short-spaced in 1964, and have remained short-spaced since that time. The NPRM proposes to modify portions of Section 73 of the rules to lift restrictions which unnecessarily impede flexibility as to site selection for grandfathered stations and substitute the currently required interference showings in applications, which have proven ineffective, with showings that directly relate to the impact such modification proposals have on other stations and the public.

2. In the NPRM, the Commission proposes to change three aspects of the rule section dealing with grandfathered short-spaced stations. First, the Commission proposes use of predicted interference area analysis based on field strength protection ratios, instead of the current limitation based on the relative locations of the 1 mV/m (60 dBu) service contour of the short-spaced stations. Second, the Commission proposes to eliminate the second-adjacent-channel and third-adjacent-channel protection criteria for grandfathered short-spaced stations. Finally, the Commission proposes to eliminate the provision for agreements between grandfathered short-spaced stations. In this Notice, the Commission invites comments relating to possible modification of these rule sections.

3. In addition, in the NPRM, the Commission invites engineering firms and other parties with knowledge about grandfathered stations to assist in identifying grandfathered short-spaced stations so that these can be classified in the Commission's engineering database.

4. The proposed rules set forth in the NPRM would put the focus on more accurately evaluating and controlling interference. The proposed rules would also return some flexibility when stations with second-adjacent-channel or third-adjacent-channel grandfathered short-spacings proposed modifications. And for stations with co-channel or first-adjacent-channel grandfathered short-spacings, the proposed rules would allow a more accurate determination of predicted interference. In addition, the proposed rules would eliminate the Commission's policy regarding agreements between grandfathered stations.

Initial Paperwork Reduction Act of 1995 Analysis

The Federal Communications, as part of its continuing effort to reduce paperwork burdens invites the general public and other Federal agencies to take this opportunity to comment on the following proposed and/or continuing information collections, as required by the Paperwork Reduction Act of 1995, Public Law 104–13. Comments are requested concerning (a) whether the proposed collection of information is necessary for the proper performance of the functions of the Commission, including whether the information shall have practical utility; (b) the accuracy of the Commissions burden estimates; (c) ways to enhance the quality, utility, and clarity of the information collected and (d) ways to minimize the burden of the collection of information on the respondents, including the use of automated collection techniques or other forms of information technology.

OMB Control Number: None.

Title: NPRM: Grandfathered Short-Spaced FM Stations.

Form Number: 301/340.

Type of Review: New collection.

Affected Public: Business or other for-profit, not-for-profit institutions.

Number of Respondents: 15 FM broadcast licensees.

Estimated time per response: 5 hours per showing (0.5 hours consultation time/4.5 hours contracting time).

Annual Burden: 7 hours.

Needs and Uses: This NPRM proposes to eliminate unnecessary regulations and streamline the current method of modifying pre-1964 grandfathered short-spaced FM stations. This NPRM is seeking comment on a proposal to lift restrictions which unnecessarily impede flexibility as to site selection for grandfathered stations and substitute the currently required interference showings in applications with showings that directly relate to the impact such modification proposals have on other stations and the public. The data are used by Commission staff to determine if the public interest will be served and that existing levels of interference will not be increased to other stations.

Initial Regulatory Flexibility Analysis

As required by section 603 of the Regulatory Flexibility Act, the Commission has prepared an Initial Regulatory Flexibility Analysis (IRFA) of the expected impact on small entities of the proposals suggested in the NPRM. Written public comments are requested on the IRFA. These comments must be filed in accordance with the same filing deadlines as comments on the rest of the

NPRM, but they must have a separate and distinct heading designating them as responses to the Initial Regulatory Flexibility Analysis. The Secretary shall send a copy of the NPRM, including the Initial Regulatory Flexibility Analysis, to the Chief Counsel for Advocacy of the Small Business Administration in accordance with paragraph 603 (a) of the Regulatory Flexibility Act, Public Law No. 96–354, 94 Stat. 1164, 5 U.S.C. 601, *et seq.* (1980).

I. Reason for Action: This proposed action is necessary to provide more flexibility for grandfathered short-spaced FM broadcast stations to effectuate minor modifications of their facilities. In addition, this proposed action would allow such minor modifications to be made more quickly than under the current procedures.

II. Objectives: The objective of this proceeding is to provide grandfathered short-spaced FM station licensees better defined standards for modifying their current facilities and to bring improved service to the public more efficiently and expeditiously while controlling interference to other stations.

III. Legal Basis: The action taken in this NPRM is authorized by sections 4(i), 5(c)(1), 302, and 303 of the Communications Act of 1934, as amended, 47 U.S.C. 154(i), 155(c)(1), 302, and 303.

IV. Description, Potential Impact and Number of Small Entities Affected: The entities affected by this proposal are pre-1964 grandfathered short-spaced FM radio station licensees seeking to effect minor modifications of facilities that have previously been authorized by the Commission. The total number of such licensees is approximately 400. Because the *NPRM* proposes provisions which allow for greater flexibility in operation, the option of whether or not to take advantage of the new rules rests with each licensee. There is no requirement that any licensee make any change as a result of these rule amendments. The number of licensees who might decide to modify their stations pursuant to these rule amendments is unknown, but under the present rules, approximately 15 stations each year file applications that propose the types of facilities modifications that are the subject of these rule amendments.

V. Recording, Record Keeping and Other Compliance Requirements: None.

VI. Federal Rules which Overlap, Duplicate or Conflict with these Rules: None.

VII. Any Significant Alternative Minimizing Impact on Small Entities and Consistent with the Stated Objectives: None.

List of Subjects in 47 CFR Part 73

Radio broadcasting, Television broadcasting.

Federal Communications Commission.

William F. Caton,

Acting Secretary.

[FR Doc. 96–16395 Filed 6–26–96; 8:45 am]

BILLING CODE 6712–01–P

DEPARTMENT OF TRANSPORTATION

Research and Special Programs Administration

49 CFR Part 192

[Docket PS–118A; Notice 1]

RIN 2137–AC55

Excess Flow Valve—Customer Notification

AGENCY: Research and Special Programs Administration (RSPA), DOT.

ACTION: Notice of proposed rulemaking.

SUMMARY: This notice proposes to require operators of natural gas distribution systems to notify in writing their customers of the availability of excess flow valves (EFVs) meeting DOT-prescribed performance standards, the safety benefits of these valves, and the costs of installation. If a customer requests installation, the notice proposes that an operator will be required to install the EFV if the customer pays all costs of installation. EFVs restrict the flow of gas by closing automatically when a service line is severed, thus mitigating the consequences of service line failures. This proposed regulation would enhance public awareness of the safety benefits that can be derived from installation of EFVs.

DATES: Comments on this notice of proposed rulemaking (NPRM) must be received on or before August 26, 1996. Late-filed comments will be considered to the extent practicable. Interested persons should submit as part of their written comments all the material that is considered relevant to any statement or argument made.

ADDRESSES: Written comments must be submitted in duplicate and mailed or hand-delivered to the Dockets Unit, room 8421, U.S. Department of Transportation, Research and Special Programs Administration, 400 Seventh Street, SW., Washington, DC 20590. Identify the docket and notice numbers stated in the heading of this notice. All comments and materials cited in this document will be available for inspection and copying in room 8421 between 8:30 a.m. and 4:30 p.m. each business day. Non-federal employee visitors are admitted to the DOT headquarters building through the southwest entrance at Seventh and E Streets.

FOR FURTHER INFORMATION CONTACT: Mike M. Israni, (202) 366–4571, regarding the content of this document, or the Dockets Unit (202) 366–4453 for copies of this NPRM or other material in the docket.

SUPPLEMENTARY INFORMATION:

Background

In the process of routine excavation activities, excavators often sever gas service lines causing loss of life, injury, or property damage by fire or explosion. EFVs restrict the flow of gas by closing automatically when a line is severed, thus mitigating the consequences of service line failures. Despite efforts, such as damage prevention programs, to reduce the frequency of excavation-related service line incidents on natural gas service lines, such incidents persist and continue to result in death, injury, fire, or explosion. Because damage prevention measures are not foolproof, RSPA has sought to determine an appropriate means to mitigate the consequences of these incidents. The National Transportation Safety Board (NTSB) and others have recommended the use of EFVs as a means to mitigate the consequences of such incidents, thus saving lives and lessening the extent of property damage.

By informing customers of the availability of EFVs for installation at a cost and the resultant safety benefits, customers can decide for themselves if they want the operator to install an EFV on their service line. Notification giving information on EFVs may encourage the increased use of EFVs and, by encouraging such use, may lead to a reduction in fatalities, injuries, and property damage that can result from excavation-related incidents on gas service lines.

Statutory Requirement

Federal law requires DOT to prescribe regulations requiring operators to notify customers in writing about EFV availability, the safety benefits derived from installation, and costs associated with installation. The regulations are to provide that, except where installation is already required, the operator will install an EFV that meets prescribed performance criteria at the customer's request, if the customer pays all costs associated with installation. (49 U.S.C. 60110).

Before DOT prescribes notification regulations, the statute requires DOT to issue regulations prescribing the circumstances under which operators of natural gas distribution systems must install EFVs, unless DOT determines that there are no circumstances under which EFVs should be installed.

RSPA published an NRPM (Notice 2; 58 FR 21524; April 21, 1993), titled ''Excess Flow Valve Installation on Service Lines,'' proposing to require installation of EFVs on single-residence gas service lines. During the rulemaking process RSPA reviewed technical information, sought advice from state safety representatives, and analyzed available operational data. RSPA determined, primarily for cost reasons, that there were no circumstances under which RSPA should require EFV installation. As required by the statute, RSPA reported this determination to Congress on April 4, 1995. A copy of this report is available in the docket. As further required by 49 U.S.C. 60110, RSPA developed performance standards for EFVs to ensure that an EFV installed in a single-residence gas service line operates reliably and safely. These standards were published as a final rule 61 FR 31449; June 20, 1996.

AGA Petition

On July 14, 1995, the American Gas Association (AGA) submitted a petition for a rulemaking on EFV customer notification requirements. In this petition, AGA urged RSPA to develop customer notification regulations that minimize any regulatory burden on gas operators. AGA said that the congressional committee responsible for the original notification mandate, as well as proposed changes to that mandate in current pipeline re-authorization legislation, intended that an operator be required to notify a customer about EFVs if the operator was installing a new service line or replacing a part of a service line, the line would accommodate an EFV, and the operating conditions on the line were the same as those prescribed in the performance standards. AGA further said that Congress intended an operator be required to install an EFV if the customer agreed to pay all the costs associated with the installation, maintenance, and operation of the EFV. AGA's other main concerns about customer notification are listed as follows:

(a) Operators are concerned about potential liability should an EFV fail to perform to the satisfaction of the customer and the customer claims that the gas company overstated the merits of the product.

(b) Because operators may have difficulty determining whom to notify if the occupant is not the owner, the regulation should clearly identify the customer who is to receive notification.

(c) The notification requirements should acknowledge and accommodate that state or local restrictions may prevent or restrict the gas utility's ability to accept a customer's payment for anything except gas service.

(d) Notification should be required only on services where the conditions are identical to those in the EFV performance standards.

(e) Exemption should be allowed from the notification requirements where compliance would be infeasible, impractical or unreasonable.

AGA's petition is on file in the docket and was taken into consideration during development of this notice of proposed rulemaking.

Pre-NPRM Meetings

On August 2 and September 6, 1995, RSPA met with representatives of AGA, the American Public Gas Association (APGA), NTSB, and the Gas Safety Action Council (GASAC). These meetings were early consultations for RSPA to gather information before proposing a notification rule.

APGA generally had the same concerns as AGA. AGA and APGA again recommended that the costs associated with installation include EFV maintenance and replacement costs, as well as the initial installation cost. As support, they pointed to the proposed change in the pipeline re-authorization legislation allowing for such costs. AGA and APGA also recommended that RSPA limit required notification to only new and replaced service line customers to minimize the burden on operators. They explained that because an operator could have difficulty in determining if operating conditions on existing service lines are the same as those found in the prescribed performance standards an operator should be allowed to determine whether to expand notification to all its existing residential customers. NTSB and GASAC, on the other hand, suggested that a notification rulemaking include all residential natural gas customers, as well as commercial enterprises. They pointed out that 49 U.S.C. 60110 did not limit notification to single-residence customers.

NTSB also recommended that a notification rule should require operators to include brochures from two or three EFV manufacturers, along with a consumer group's telephone number, to help customers make an informed decision on installation.

Proposed Rule

RSPA proposes to amend part 192 by adding § 192.383 prescribing requirements for excess flow valve customer notification.

Scope

The statute requires notification of customers with service lines in which EFVs that meet prescribed performance criteria can be installed. Because the final rule setting EFV performance standards covers only EFVs installed on single-residence service lines operating continuously throughout the year at a pressure not less than 10 psig, RSPA proposes to limit the scope of customer notification to those customers. RSPA developed the performance standards from the comments and recommendations received during the rulemaking process on proposed EFV installation on single-residence gas service lines.

Of those single-residence services for which performance standards were prescribed, RSPA proposes to require operators to notify in writing their new and replaced service line customers. This proposal is based on RSPA's belief that it would not be practical for operators to send notifications to all single-residence customers because determining whether EFVs can be installed on existing lines presents difficulties (such as lack of relevant records and historical data) not encountered on new and replaced lines. Furthermore, RSPA's preliminary economic evaluation showed that requiring notification to all single-residence customers would result in substantially higher costs with marginal safety benefits due to the increased time an operator would have to spend in responding to inquiries from customers and determining operating conditions on existing lines. Because of the increased installation costs to retrofit an existing line, it would be unlikely that many existing customers would choose to pay the costs of installation. Nonetheless, RSPA encourages operators to consider expanding notification to all single-residence customers.

RSPA may consider extending the scope of notification to hospitals, schools, commercial enterprises, and apartment buildings after publication of EFV standards by the American Society of Testing and Materials (ASTM) F17.40 committee and the American National Standards Institute (ANSI)/Gas Piping Technology Committee (GPTC) Z380.

Definition of ''Replaced'' Service Line

RSPA proposes to define a ''replaced'' service line as a natural gas service line

undergoing a repair in which a section of pipe is replaced between the gas main and the meter set assembly.

Definition of ''Service Line Customer''

RSPA recognizes that determining whom an operator should notify may be difficult because the occupant of the residence where the EFV may be installed is not always the owner. RSPA is proposing to define the service line customer an operator should notify as the person who pays the gas bill, or where service has not yet been established, the owner of the property. Under this proposed definition, the person who pays the gas bill may be the tenant, the owner, or a third party. In cases where service has not yet been established, such as a new subdivision or cluster of homes, the property owner at the time the service is installed may be the home builder.

Information in the Notification

RSPA is proposing that the notification contain the minimum amount of information required by the statute. Under the proposal, the operator can decide how to word that information as long as sufficient information is given to provide the customer a basis to decide whether to pay for EFV installation and the information is written in language easily comprehended by the average customer. This flexibility should address operators' concerns about potential liability problems.

—Meets DOT Performance Standards

An explanation that an excess flow valve meeting minimum DOT-prescribed performance standards is available for the operator to install on the service line if the customer pays the cost of installation. The explanation should make clear to the customer that EFV installation is not mandatory, but that if the customer requests installation and pays all costs associated with installation, the operator will install an EFV.

—Safety Benefits

An explanation of the potential safety benefits of installing an EFV, to include that an EFV is designed to shut off the flow of natural gas automatically when the service line is ruptured. The rule proposes that as long as the operator describes the benefits to be derived from installation, the operator may choose how best to describe those benefits.

—Cost associated with installation

An explanation that if the customer requests the operator to install an EFV, the customer bears the costs associated with installation and what those costs are. AGA suggested in its petition that costs ''associated'' with installation should include initial installation, maintenance, and replacement costs of the EFV. Although such costs are allowed in proposed re-authorization legislation, RSPA is following the language in 49 U.S.C. 60110 that limits costs to costs associated with installation. RSPA believes the reason for the customer notification requirement was to allow customers to have a reasonably available extra safety protection. Therefore, to assure costs are not prohibitive to customers desiring EFV installation, RSPA is proposing that an operator be limited in recoupment of its costs of installation, specifically, to direct costs (parts and labor) of installation. Thus, excavation costs for new and replaced services are not to be included in the direct cost of EFV installation.

Supplementary Material

Additional information, such as EFV manufacturers' brochures and a consumer group's telephone number, may help customers in deciding whether to have an operator install an EFV. However, RSPA believes requiring such information to be included would burden operators with trying to include every manufacturer's brochure and every applicable consumer group's telephone number, or would leave operators open to criticism from those whose information was not included. Nonetheless, RSPA encourages operators to include additional information, such as one or more EFV manufacturer's brochures or a consumer group's telephone number, if in the operator's judgment the information would aid the customer's decision making.

Time and Frequency of Notification

RSPA proposes that an operator notify each applicable service line customer the later of 1 year after date of publication of a final rule in the Federal Register or at least 30 days before the operator installs a new service line or replaces the service line. One year should be adequate time for operators to learn which customers to notify, to draft notices, and to instruct personnel to handle inquiries.

Exemptions

In RSPA's judgment the regulatory waiver process now in place should alleviate concern about an operator's recourse if a jurisdiction (state or local) prevents or restricts the gas utility from accepting a customer's payment for anything other than gas service. To RSPA's knowledge, when a customer voluntarily asks for extra safety protection, a state or local jurisdiction may not prevent a gas operator from charging that customer for providing that extra service. However, if an operator is so prevented, it may apply for a waiver from the regulation. In any case, because we lack information on how prevalent this situation is, we seek comment from operators, state pipeline safety agencies, their representative associations and others on this issue. We also seek comment on whether the waiver process in such a situation would be too burdensome. Similarly, if an operator believes that in a particular situation, compliance would be infeasible, impractical or unreasonable, the operator may apply for a regulatory waiver. Again, we seek comment on this issue.

RSPA is proposing that the notification requirements would not apply in certain limited circumstances—

(1) To service lines in which the operator will install an excess flow valve voluntarily or where installation is required by the state or local jurisdiction;

(2) If excess flow valves meeting the RSPA-prescribed performance standards are not available to the operator;

(3) Where an operator has prior experience with contaminants in the gas stream that could interfere with operation of the EFV, cause loss of service to a residence, or where the installation of an excess flow valve would interfere with necessary operation or maintenance activities, such as blowing liquids from the line.

The burden will be on the operator to demonstrate that any of these circumstances prevent it from installing an EFV.

As previously noted, AGA's petition requested that a notification rule allow an exemption in emergency situations. RSPA recognizes that in some situations an operator may not be able to notify a customer before replacing a service line. However, RSPA does not want such an exemption to be used on all repairs. We seek comment and information on how to implement and define this requested exclusion. What type of emergency repairs do operators see that could justify such an exemption? How can an exemption be limited so that it can not be used for any repair needing replacement?

Record

To check compliance, RSPA and State inspectors will need to view a copy of the notice operators send customers and proof that notices have been sent to customers. Therefore, RSPA proposes that each operator must make the

following records available for inspection by the Administrator or a State agency participating under 49 U.S.C. 60105 or 60106:

(1) A copy of the notice currently in use; and

(2) Proof that notices have been sent to customers within the previous three years.

Regulatory Analyses and Notices

Executive Order 12866 and DOT Regulatory Policies and Procedures

This proposed rule is not considered a significant regulatory action under section 3(f) of Executive Order 12866 and, therefore, was not subject to review by the Office of Management and Budget. The proposed rule is not considered significant under the regulatory policies and procedures of the Department of Transportation (44 FR 11034; February 26, 1979).

A regulatory evaluation has been prepared based on the estimated expense involved in developing and sending customer notification to new and replaced single-residence service line customers.

RSPA estimates that large and moderate-sized gas operators will develop their own customer notice. This should take approximately 40 hours at approximately $25 an hour or a one-time cost of $1,000 per company (40 hours × $25 per hour = $1,000). RSPA estimates in its regulatory evaluation (based on analysis done for an earlier rulemaking on customer-owned service lines) that there are 106 large gas operators and 145 moderate-sized gas operators. Therefore, the cost to the industry to develop this proposed notice will be a one-time cost of $251,000 (251 × $1,000). The cost of mailing this notice will be $0.32 plus the estimated $0.1 copying cost for a one-page notice, for a total cost of $0.42 per customer. If there are 900,000 new or renewed customers annually, the cost of this notice should be $378,000 (900,000 *.42 mailing) per year. Assuming 10% of all notified customers were to call operators for more information, that would result in 90,000 phone calls. Each call lasting five minutes would amount to 7,500 hours (90,000 * 5⁄60 hrs) spent answering customer inquiries. If the employee responsible for answering were paid $15 per hour the additional cost of these conversations would be $112,500 (7,500 * $15) per year. The total cost to the industry will be the one time cost of developing the proposed notice, $251,000, and the additional cost per year of mailing and handling inquiries, $490,500 ($112,500 + $378,000).

As discussed in the Regulatory Evaluation, the American Public Gas Association (APGA), which represents municipal gas distribution companies (the bulk of small operators), has agreed to assist small and medium-sized operators in developing a generic EFV notification. RSPA also believes that EFV manufacturers, as well as other large companies and state gas associations, are likely to assist smaller gas operators in their development of an EFV notification. With this help, RSPA believes that small and medium-sized operators will choose to use a generic notification rather than incur the cost of developing their own notice. However, there will be the cost of notice reproduction, mailing, and handling phone inquiries as described above. Therefore, RSPA estimates that the cost of developing this notice as proposed will be minimal for small and medium-sized operators.

RSPA considered requiring notification of the availability of EFVs to all customers, not simply new and renewed customers. This alternative was rejected as not being cost-beneficial for two reasons. First, the cost of this rule would be an additional $5.36 million (53.6 million customers × $.10 per copy) just for developing the notice. In addition, assuming 10% of all notified customers were to telephone operators for more information, that would result in 5.36 million additional phone calls. Each call lasting five minutes would amount to 446,666 hours (5.36 million* 5⁄60 hours). If the employees responsible for answering these inquiries were paid a salary of $15 per hour, the additional cost of handling inquiries would be $6.7 million (5.36M * 5⁄6 * 15) to the industry. Therefore, the total cost of notifying existing customers would be additional $12 million ($5.36M + $6.7M). Second, there would be marginal safety benefit as few existing service line customers would be likely to request EFV installation that could cost more than $500 per service line, mainly due to the excavation costs associated with such installation. Therefore, RSPA concludes that requiring operators to notify all existing customers would cost significantly more and would provide little additional benefit to the public.

Benefits that are expected to result from this proposed rule are the increased use of EFVs, which could potentially reduce the fatalities, injuries and property damage that can result from excavation-related incidents on gas service lines.

The regulatory evaluation is available for review in the docket. Based on the findings of this evaluation this proposed rule should have minimal economic impact on industry and the public.

Regulatory Flexibility Act

The Federal Government is required to determine the impact of its regulations on small entities. Based on the regulatory evaluation, RSPA has determined that the proposed rule will not have a significant impact on a substantial number of small entities. Approximately 1,600 natural gas distribution operators will be affected by this rule. APGA, the trade association of the majority of small operators, has indicated it will assist operators in preparing a notification. Additionally, EFV manufacturers have also offered to assist operators. It is also likely that regional gas associations and large operators will assist smaller operators in developing the appropriate notification. All these actions will serve to minimize the costs to small operators because small operators are apt to use a generic notice created by one of these groups rather than incur the expenses of developing their own notice.

Paperwork Reduction Act

This NPRM contains proposed information collections that have been submitted for review by the Office of Management and Budget (OMB) under section 3507(d) of the Paperwork Reduction Act of 1995 (Pub. L. 104–13).

Interested persons are invited to comment on the proposed collection of information. Comments should address: (1) The necessity and utility of the proposed information collection for the proper performance of the agency's functions; (2) the accuracy of the agency's burden estimates, including the validity of the methodology and assumptions used; (3) ways to enhance the quality, utility, and clarity of the information to be collected; and (4) ways to minimize the information collection burden on the respondents, including the use of automated, electronic, mechanical, or other technological collection techniques.

Administration: Department of Transportation, Research and Special Programs Administration;

Title: Excess Flow Valves: Customer Notification.

Need for Information: By notifying customers that they may have an excess flow valve installed on their line at cost, some of the consequences of service line failures (fatalities, injuries and property damage) could be mitigated.

Summary: Operators must demonstrate that they have sent the EFV notification to their customers.

Proposed Use of Information: The notification will advise customers that

they may request an excess flow valve be installed on their service line at their own expense. Also, by keeping proof that notification was sent, RSPA will be able to ascertain that operators are complying with this regulation.

Frequency: Occasionally, once for each new and renewed customer.

Number of Respondents: 1,590.

Estimate of Burden: 17,541 hours.

Respondents: Natural Gas Distribution Operators.

Estimated Total Annual Burden on Respondents: 11 hours (first year) 4.75 hours each subsequent year.

For further information contact: Mr. Marvin Fell, Office of Pipeline Safety, Research and Special Programs Administration, 400 Seventh St., SW., Washington, DC 20590.

Comments on the proposed information collection requirements should be submitted within 30 days of the publication of this notice to: the Office of Management and Budget, Office of Information and Regulatory affairs, New Executive Office Building, 725 17th St., NW., Washington, DC 20503, Attn: Desk Officer RSPA. Persons submitting comments to OMB are also requested to submit a copy of their comments to RSPA as indicated above under **ADDRESSES**.

Persons are not required to respond to a collection of information unless it displays a currently valid OMB control number.

Federalism

This proposed rule will not have substantial effects on states, on the relationship between the federal government and the states, or on the distribution of power and responsibilities among the various levels of government. Therefore, in accordance with E.O. 12612 (52 FR 41685, October 30, 1987), RSPA has determined that this proposed rule does not have sufficient federalism implications to warrant preparation of a Federalism Assessment.

List of Subjects in 49 CFR Part 192

Pipeline Safety, Reporting requirements.

The Rule

In consideration of the foregoing, RSPA proposes to amend 49 CFR part 192 as follows:

PART 192—[AMENDED]

1. The authority citation for part 192 continues to read as follows:

Authority: 49 U.S.C. 5103, 60102, 60104, 60110, and 60118; 49 CFR 1.53.

2. Part 192 would be amended by adding § 192.383 to read as follows:

§ 192.383 Excess flow valve Customer Notification.

(a) Prior to installing a new service line or replacing an existing service line that operates continuously throughout the year at a pressure not less than 10 psig and that serves a single residence, each operator of a natural gas distribution system shall notify the service line customer in writing that:

(1) An excess flow valve meeting performance standards prescribed under § 192.381 is available for installation by the operator if the customer bears the costs associated with installation;

(2) Potential safety benefits may be derived from installing an excess flow valve. Benefits are to include that an excess flow valve is designed to shut off the flow of natural gas automatically when the service line is ruptured.

(3) The costs the customer bears shall be the direct costs (parts and labor) of installing or replacing the excess flow valve and what those costs are.

(4) The notice shall provide explanation in sufficient detail, and in language easily comprehended by the average customer, to provide the basis upon which the customer can decide whether to pay for installation.

(5) For the purpose of this section, a ''replaced'' service line refers to a natural gas service line in which a section of pipe is replaced between the gas main and the meter set assembly. A ''service line customer'' means the person who pays the gas bill, or where service has not yet been established, the owner of the property.

(b) The operator shall install an excess flow valve in accordance with paragraph (a) of this section if the customer agrees to pay all costs associated with installation.

(c) Each operator shall notify each customer not later than [insert date 1 year after date of publication of a final rule] or at least 30 days before a new or replaced service line is installed, whichever is later.

(d) Each operator must make the following records available for inspection by the Administrator or a State agency participating under 49 U.S.C. 60105 or 60106:

(1) A copy of the notice currently in use; and

(2) Proof that notices have been sent to customers within the previous 3 years.

(e) The notification requirements of paragraph (a) of this section do not apply—

(1) To service lines in which the operator will install an excess flow valve voluntarily or where installation is required by the state or local jurisdiction;

(2) If excess flow valves meeting the RSPA prescribed performance standards are not available to the operator;

(3) Where an operator has prior experience with contaminants in the gas stream that could interfere with the EFV, cause loss of service to a residence or where the installation of an excess flow valve would interfere with necessary operation or maintenance activities, such as blowing liquids from the line.

Issued in Washington, DC, on June 21, 1996.

Richard B. Felder,

Associate Administrator for Pipeline Safety.

[FR Doc. 96–16384 Filed 6–26–96; 8:45 am]

BILLING CODE 4910–60–P

Notices

Federal Register
Vol. 61, No. 125
Thursday, June 27, 1996

This section of the FEDERAL REGISTER contains documents other than rules or proposed rules that are applicable to the public. Notices of hearings and investigations, committee meetings, agency decisions and rulings, delegations of authority, filing of petitions and applications and agency statements of organization and functions are examples of documents appearing in this section.

DEPARTMENT OF AGRICULTURE

Secretary of Agriculture's Special Cotton Import Quota Announcement Number 20

AGENCY: Office of the Secretary, USDA.

ACTION: Notice.

SUMMARY: A special import quota for upland cotton equal to 43,370,449 kilograms (95,615,552 pounds) is established in accordance with section 136(b) of the Federal Agriculture Improvement and Reform Act of 1996 (the 1996 Act) under Presidential Proclamation 6301 of June 7, 1991. The quota is referenced as the Secretary of Agriculture's Special Cotton Import Quota Announcement Number 20, effective July 15, 1996, and is set forth in subheading 9903.52.20, subchapter III, chapter 99 of the Harmonized Tariff Schedule of the United States (HTS).

DATES: The quota is effective as of July 15, 1996, and applies to upland cotton purchased not later than October 12, 1996 (90 days from the date the quota was established), and entered into the United States not later than January 10, 1997 (180 days from the date the quota was established).

FOR FURTHER INFORMATION CONTACT: Janise Zygmont, Farm Service Agency, United States Department of Agriculture, Ag Code 0515, PO Box 2415, Washington, DC 20013–2415 or call (202) 720–8841.

SUPPLEMENTARY INFORMATION: The 1996 Act requires that a special import quota for upland cotton be determined and announced immediately if, for any consecutive 10-week period, the Friday through Thursday average price quotation for the lowest-priced U.S. growth, as quoted for Middling 1 3/32 inch cotton, C.I.F. northern Europe (U.S. Northern Europe price), adjusted for the value of any cotton user marketing certificates issued, exceeds the Northern Europe price by more than 1.25 cents per pound. This condition was met during the consecutive 10-week period that ended May 30, 1996. Therefore, a quota referenced as the Secretary of Agriculture's Special Cotton Import Quota Announcement Number 20, effective July 15, 1996, is hereby established.

Because there are only 20 subheadings available for designating upland cotton special import quotas in subchapter III of chapter 99 of the HTS, only 20 such quotas can be in effect at one time. Each subheading corresponds to a Secretary of Agriculture's Special Cotton Import Quota Announcement specifying that a particular amount of upland cotton may be imported during a particular 180-day period. The special import quota described in this notice cannot take effect until HTS subheading 9903.52.20 becomes available upon the expiration of the Secretary of Agriculture's Special Cotton Import Quota Announcement Number 20, effective January 17, 1996, through July 14, 1996. Therefore, the special import quota described in this notice opens on July 15, 1996, the day after the previous special import quota 20 ends.

The quota amount, 43,370,449 kilograms (95,615,552 pounds), is equal to 1 week's consumption of upland cotton by domestic mills at the seasonally-adjusted average rate of the most recent 3 months for which data are available—February 1996 through April 1996. The special import quota identifies a quantity of imports that is not subject to the over-quota tariff rate of a tariff-rate quota. The quota is not divided by staple length or by country of origin. The quota does not affect existing tariff rates or phytosanitary regulations. The quota does not apply to Extra Long Staple cotton.

Authority: Sec. 136, Pub. L. 104–127 and U.S. Note 6(a), Subchapter III, Chapter 99 of the HTS.

Signed at Washington, DC, on June 20, 1996.

Dan Glickman,

Secretary.

[FR Doc. 96–16459 Filed 6–26–96; 8:45 am]

BILLING CODE 3410–05–M

Secretary of Agriculture's Special Cotton Import Quota Announcement Number 19

AGENCY: Office of the Secretary, USDA.

ACTION: Notice.

SUMMARY: A special import quota for upland cotton equal to 43,370,449 kilograms (95,615,552 pounds) is established in accordance with section 136(b) of the Federal Agriculture Improvement and Reform Act of 1996 (the 1996 Act) under Presidential Proclamation 6301 of June 7, 1991. The quota is referenced as the Secretary of Agriculture's Special Cotton Import Quota Announcement Number 19, effective July 8, 1996, and is set forth in subheading 9903.52.19, subchapter III, chapter 99 of the Harmonized Tariff Schedule of the United States (HTS).

DATES: The quota, is effective as of July 8, 1996, and applies to upland cotton purchased not later than October 5, 1996 (90 days from the date the quota was established), and entered into the United States not later than January 3, 1997 (180 days from the date the quota was established).

FOR FURTHER INFORMATION CONTACT: Janise Zygmont, Farm Service Agency, United States Department of Agriculture, Ag Code 0515, PO Box 2415, Washington, DC 20013–2415 or call (202) 720–8841.

SUPPLEMENTARY INFORMATION: The 1996 Act requires that a special import quota for upland cotton be determined and announced immediately if, for any consecutive 10-week period, the Friday through Thursday average price quotation for the lowest-priced U.S. growth, as quoted for Middling 1 3/32 inch cotton, C.I.F. northern Europe (U.S. Northern Europe price), adjusted for the value of any cotton user marketing certificates issued, exceeds the Northern Europe price by more than 1.25 cents per pound. This condition was met during the consecutive 10-week period that ended May 23, 1996. Therefore, a quota referenced as the Secretary of Agriculture's Special Cotton Import Quota Announcement Number 19, effective July 8, 1996, is hereby established.

Because there are only 20 subheadings available for designating upland cotton special import quotas in subchapter III of chapter 99 of the HTS, only 20 such quotas can be in effect at one time. Each subheading corresponds to a Secretary of Agriculture's Special Cotton Import Quota Announcement specifying that a particular amount of upland cotton may be imported during a particular 180-day period. The special import quota described in this notice

cannot take effect until HTS subheading 9903.52.19 becomes available upon the expiration of the Secretary of Agriculture's Special Cotton Import Quota Announcement Number 19, effective January 10, 1996, through July 7, 1996. Therefore, the special import quota described in this notice opens on July 8, 1996, the day after the previous special import quota 19 ends.

The quota amount, 43,370,449 kilograms (95,615,552 pounds), is equal to 1 week's consumption of upland cotton by domestic mills at the seasonally-adjusted average rate of the most recent 3 months for which data are available—February 1996 through April 1996. The special import quota identifies a quantity of imports that is not subject to the over-quota tariff rate of a tariff-rate quota. The quota is not divided by staple length or by country of origin. The quota does not affect existing tariff rates or phytosanitary regulations. The quota does not apply to Extra Long Staple cotton.

Authority: Sec. 136, P.L. 104–127 and U.S. Note 6(a), Subchapter III, Chapter 99 of the HTS.

Signed at Washington, D.C., on June 20, 1996.

Dan Glickman,

Secretary.

[FR Doc. 96–16460 Filed 6–26–96; 8:45 am]

BILLING CODE 3410–05–M

Secretary of Agriculture's Special Cotton Import Quota Announcement Number 18

AGENCY: Office of the Secretary, USDA.

ACTION: Notice.

SUMMARY: A special import quota for upland cotton equal to 42,728,074 kilograms (94,199,355 pounds) is established in accordance with section 136(b) of the Federal Agriculture Improvement and Reform Act of 1996 (the 1996 Act) under Presidential Proclamation 6301 of June 7, 1991. The quota is referenced as the Secretary of Agriculture's Special Cotton Import Quota Announcement Number 18, effective July 1, 1996, and is set forth in subheading 9903.52.18, subchapter III, chapter 99 of the Harmonized Tariff Schedule of the United States (HTS).

DATES: The quota is effective as of July 1, 1996, and applies to upland cotton purchased not later than September 28, 1996 (90 days from the date the quota was established), and entered into the United States not later than December 27, 1996 (180 days from the date the quota was established).

FOR FURTHER INFORMATION CONTACT: Janise Zygmont, Farm Service Agency, United States Department of Agriculture, Ag Code 0515, PO Box 2415, Washington, DC 20013–2415 or call (202) 720–8841.

SUPPLEMENTARY INFORMATION: The 1996 Act requires that a special import quota be determined and announced immediately if, for any consecutive 10-week period, the Friday through Thursday average price quotation for the lowest-priced U.S. growth, as quoted for Middling 1 3/32 inch cotton, C.I.F. northern Europe (U.S. Northern Europe price), adjusted for the value of any cotton user marketing certificates issued, exceeds the Northern Europe price by more than 1.25 cents per pound. This condition was met during the consecutive 10-week period that ended May 16, 1996. Therefore, a quota referenced as the Secretary of Agriculture's Special Cotton Import Quota Announcement Number 18, effective July 1, 1996, is hereby established.

Because there are only 20 subheadings available for designating upland cotton special import quotas in subchapter III of chapter 99 of the HTS, only 20 such quotas can be in effect at one time. Each subheading corresponds to a Secretary of Agriculture's Special Cotton Import Quota Announcement specifying that a particular amount of upland cotton may be imported during a particular 180-day period. The special import quota described in this notice cannot take effect until HTS subheading 9903.52.18 becomes available upon the expiration of the Secretary of Agriculture's Special Cotton Import Quota Announcement Number 18, effective January 3, 1996, through June 30, 1996. Therefore, the special import quota described in this notice opens on July 1, 1996, the day after the previous special import quota 18 ends.

The quota amount, 42,728,074 kilograms (94,199,355 pounds), is equal to 1 week's consumption of upland cotton by domestic mills at the seasonally-adjusted average rate of the most recent 3 months for which data are available—January 1996 through March 1996. The special import quota identifies a quantity of imports that is not subject to the over-quota tariff rate of a tariff-rate quota. The quota is not divided by staple length or by country of origin. The quota does not affect existing tariff rates or phytosanitary regulations. The quota does not apply to Extra Long Staple cotton.

Authority: Sec. 136, P.L. 104–127 and U.S. Note 6(a), Subchapter III, Chapter 99 of the HTS.

Signed at Washington, D.C., on June 20, 1996.

Dan Glickman,

Secretary.

[FR Doc. 96–16461 Filed 6–26–96; 8:45 am]

BILLING CODE 3410–05–M

Secretary of Agriculture's Special Cotton Import Quota Announcement Number 17

AGENCY: Office of the Secretary, USDA.

ACTION: Notice.

SUMMARY: A special import quota for upland cotton equal to 42,728,074 kilograms (94,199,355 pounds) is established in accordance with section 136(b) of the Federal Agriculture Improvement and Reform Act of 1996 (the 1996 Act) under Presidential Proclamation 6301 of June 7, 1991. The quota is referenced as the Secretary of Agriculture's Special Cotton Import Quota Announcement Number 17, effective June 24, 1996, and is set forth in subheading 9903.52.17, subchapter III, chapter 99 of the Harmonized Tariff Schedule of the United States (HTS).

DATES: The quota is effective as of June 24, 1996, and applies to upland cotton purchased not later than September 21, 1996 (90 days from the date the quota was established), and entered into the United States not later than December 20, 1996 (180 days from the date the quota was established).

FOR FURTHER INFORMATION CONTACT: Janise Zygmont, Farm Service Agency, United States Department of Agriculture, Ag Code 0515, PO Box 2415, Washington, DC 20013–2415 or call (202) 720–8841.

SUPPLEMENTARY INFORMATION: The 1996 Act requires that a special import quota for upland cotton be determined and announced immediately if, for any consecutive 10-week period, the Friday through Thursday average price quotation for the lowest-priced U.S. growth, as quoted for Middling 1 3/32 inch cotton, C.I.F. northern Europe (U.S. Northern Europe price), adjusted for the value of any cotton user marketing certificates issued, exceeds the Northern

Europe price by more than 1.25 cents per pound. This condition was met during the consecutive 10-week period that ended May 9, 1996. Therefore, a quota referenced as the Secretary of Agriculture's Special Cotton Import Quota Announcement Number 17, effective June 24, 1996, is hereby established.

Because there are only 20 subheadings available for designating upland cotton special import quotas in subchapter III of chapter 99 of the HTS, only 20 such quotas can be in effect at one time. Each subheading corresponds to a Secretary of Agriculture's Special Cotton Import Quota Announcement specifying that a particular amount of upland cotton may be imported during a particular 180-day period. The special import quota described in this notice cannot take effect until HTS subheading 9903.52.17 becomes available upon the expiration of the Secretary of Agriculture's Special Cotton Import Quota Announcement Number 17, effective December 27, 1995, through June 23, 1996. Therefore, the special import quota described in this notice opens on June 24, 1996, the day after the previous special import quota 17 ends.

The quota amount, 42,728,074 kilograms (94,199,355 pounds), is equal to 1 week's consumption of upland cotton by domestic mills at the seasonally-adjusted average rate of the most recent 3 months for which data are available—January 1996 through March 1996. The special import quota identifies a quantity of imports that is not subject to the over-quota tariff rate of a tariff-rate quota. The quota is not divided by staple length or by country of origin. The quota does not affect existing tariff rates or phytosanitary regulations. The quota does not apply to Extra Long Staple cotton.

Authority: Sec. 136, Public Law 104–127 and U.S. Note 6(a), Subchapter III, Chapter 99 of the HTS.

Signed at Washington, D.C., on June 20, 1996.

Dan Glickman,

Secretary.

[FR Doc. 96–16462 Filed 6–26–96; 8:45 am]

BILLING CODE 3410–05–M

Secretary of Agriculture's Special Cotton Import Quota Announcement Number 16

AGENCY: Office of the Secretary, USDA.

ACTION: Notice.

SUMMARY: A special import quota for upland cotton equal to 42,728,074 kilograms (94,199,355 pounds) is established in accordance with section 136(b) of the Federal Agriculture Improvement and Reform Act of 1996 (the 1996 Act) under Presidential Proclamation 6301 of June 7, 1991. The quota is referenced as the Secretary of Agriculture's Special Cotton Import Quota Announcement Number 16, effective June 17, 1996, and is set forth in subheading 9903.52.16, subchapter III, chapter 99 of the Harmonized Tariff Schedule of the United States (HTS).

DATES: The quota is effective as of June 17, 1996, and applies to upland cotton purchased not later than September 14, 1996 (90 days from the date the quota was established), and entered into the United States not later than December 13, 1996 (180 days from the date the quota was established).

FOR FURTHER INFORMATION CONTACT: Janise Zygmont, Farm Service Agency, United States Department of Agriculture, Ag Code 0515, PO Box 2415, Washington, DC 20013–2415 or call (202) 720–8841.

SUPPLEMENTARY INFORMATION: The 1996 Act requires that a special cotton import quota be determined and announced immediately if, for any consecutive 10-week period, the Friday through Thursday average price quotation for the lowest-priced U.S. growth, as quoted for Middling 1 3/32 inch cotton, C.I.F. northern Europe (U.S. Northern Europe price), adjusted for the value of any cotton user marketing certificates issued, exceeds the Northern Europe price by more than 1.25 cents per pound. This condition was met during the consecutive 10-week period that ended May 2, 1996. Therefore, a quota referenced as the Secretary of Agriculture's Special Cotton Import Quota Announcement Number 16, effective June 17, 1996, is hereby established.

Because there are only 20 subheadings available for designating upland cotton special import quotas in subchapter III of chapter 99 of the HTS, only 20 such quotas can be in effect at one time. Each subheading corresponds to a Secretary of Agriculture's Special Cotton Import Quota Announcement specifying that a particular amount of upland cotton may be imported during a particular 180-day period. The special import quota described in this notice cannot take effect until HTS subheading 9903.52.16 becomes available upon the expiration of the Secretary of Agriculture's Special Cotton Import Quota Announcement Number 16, effective December 20, 1995, through June 16, 1996. Therefore, the special import quota described in this notice opens on June 17, 1996, the day after the previous special import quota 16 ends.

The quota amount, 42,728,074 kilograms (94,199,355 pounds), is equal to 1 week's consumption of upland cotton by domestic mills at the seasonally-adjusted average rate of the most recent 3 months for which data are available—January 1996 through March 1996. The special import quota identifies a quantity of imports that is not subject to the over-quota tariff rate of a tariff-rate quota. The quota is not divided by staple length or by country of origin. The quota does not affect existing tariff rates or phytosanitary regulations. The quota does not apply to Extra Long Staple cotton.

Authority: Sec. 136, Public Law 104–127 and U.S. Note 6(a), Subchapter III, Chapter 99 of the HTS.

Signed at Washington, D.C., on June 20, 1996.

Dan Glickman,

Secretary.

[FR Doc. 96–16463 Filed 6–26–96; 8:45 am]

BILLING CODE 3410–05–M

Secretary of Agriculture's Special Cotton Import Quota Announcement Number 15

AGENCY: Office of the Secretary, USDA.

ACTION: Notice.

SUMMARY: A special import quota for upland cotton equal to 42,728,074 kilograms (94,199,355 pounds) is established in accordance with section 136(b) of the Federal Agriculture Improvement and Reform Act of 1996 (the 1996 Act) under Presidential Proclamation 6301 of June 7, 1991. The quota is referenced as the Secretary of Agriculture's Special Cotton Import Quota Announcement Number 15, effective June 10, 1996, and is set forth in subheading 9903.52.15, subchapter III, chapter 99 of the Harmonized Tariff Schedule of the United States (HTS).

DATES: The quota is effective as of June 10, 1996, and applies to upland cotton purchased not later than September 7, 1996 (90 days from the date the quota was established), and entered into the United States not later than December 6, 1996 (180 days from the date the quota was established).

FOR FURTHER INFORMATION CONTACT: Janise Zygmont, Farm Service Agency, United States Department of Agriculture, Ag Code 0515, PO Box 2415, Washington, DC 20013–2415 or call (202) 720–8841.

SUPPLEMENTARY INFORMATION: The 1996 Act requires that a special import quota for upland cotton be determined and

announced immediately if, for any consecutive 10-week period, the Friday through Thursday average price quotation for the lowest-priced U.S. growth, as quoted for Middling 1 3/32 inch cotton, C.I.F. northern Europe (U.S. Northern Europe price), adjusted for the value of any cotton user marketing certificates issued, exceeds the Northern Europe price by more than 1.25 cents per pound. This condition was met during the consecutive 10-week period that ended April 25, 1996. Therefore, a quota referenced as the Secretary of Agriculture's Special Cotton Import Quota Announcement Number 15, effective June 10, 1996, is hereby established.

Because there are only 20 subheadings available for designating upland cotton special import quotas in subchapter III of chapter 99 of the HTS, only 20 such quotas can be in effect at one time. Each subheading corresponds to a Secretary of Agriculture's Special Cotton Import Quota Announcement specifying that a particular amount of upland cotton may be imported during a particular 180-day period. The special import quota described in this notice cannot take effect until HTS subheading 9903.52.15 becomes available upon the expiration of the Secretary of Agriculture's Special Cotton Import Quota Announcement Number 15, effective December 13, 1995, through June 9, 1996. Therefore, the special import quota described in this notice opens on June 10, 1996, the day after the previous special import quota 15 ends.

The quota amount, 42,728,074 kilograms (94,199,355 pounds), is equal to 1 week's consumption of upland cotton by domestic mills at the seasonally-adjusted average rate of the most recent 3 months for which data are available—January 1996 through March 1996. The special import quota identifies a quantity of imports that is not subject to the over-quota tariff rate of a tariff-rate quota. The quota is not divided by staple length or by country of origin. The quota does not affect existing tariff rates or phytosanitary regulations. The quota does not apply to Extra Long Staple cotton.

Authority: Sec. 136, Public Law 104–127 and U.S. Note 6(a), Subchapter III, Chapter 99 of the HTS.

Signed at Washington, D.C., on June 20, 1996.

Dan Glickman,

Secretary.

[FR Doc. 96–16464 Filed 6–26–96; 8:45 am]

BILLING CODE 3410–05–M

Animal and Plant Health Inspection Service

[Docket No. 96–002–2]

Asgrow Seed Co.; Availability of Determination of Nonregulated Status for Squash Line Genetically Engineered for Virus Resistance

AGENCY: Animal and Plant Health Inspection Service, USDA.

ACTION: Notice.

SUMMARY: We are advising the public of our determination that the Asgrow Seed Company's squash line designed as CZW–3 that has been genetically engineered for virus resistance is no longer considered a regulated article under our regulations governing the introduction of certain genetically engineered organisms. Our determination is based on our evaluation of data submitted by the Asgrow Seed Company in its petition for a determination of nonregulated status, an analysis of other scientific data, and our review of comments received from the public in response to a previous notice announcing our receipt of the Asgrow Seed Company's petition. This notice also announces the availability of our written determination document and its associated environmental assessment and finding of no significant impact.

EFFECTIVE DATE: June 14, 1996.

ADDRESSES: The determination, an environmental assessment and finding of no significant impact, the petition, and all written comments received regarding the petition may be inspected at USDA, room 1141, South Building, 14th Street and Independence Avenue SW., Washington, DC, between 8 a.m. and 4:30 p.m., Monday through Friday, except holidays. Persons wishing to inspect those documents are asked to call in advance of visiting at (202) 690–2817.

FOR FURTHER INFORMATION CONTACT: Dr. James White, Biotechnology Permits, BBEP, APHIS, 4700 River Road Unit 147, Riverdale, MD 20737–1237; (301) 734–7612. To obtain a copy of the determination or the environmental assessment and finding of no significant impact, contact Ms. Kay Peterson at (301) 734–7612; e-mail: mkpeterson@aphis.usda.gov.

SUPPLEMENTARY INFORMATION:

Background

On December 18, 1995, the Animal and Plant Health Inspection Service (APHIS) received a petition (APHIS Petition No. 95–352–01p) from the Asgrow Seed Company (Asgrow) of Kalamazoo, MI, seeking a determination that a yellow crookneck squash line designated as CZW–3 (line CZW–3) that has been genetically engineered to contain genes that confer virus resistance does not present a plant pest risk and, therefore, is not a regulated article under APHIS' regulations in 7 CFR part 340.

On February 2, 1996, APHIS published a notice in the Federal Register (61 FR 3899–3900, Docket No. 96–002–1) announcing that the Asgrow petition had been received and was available for public review. The notice also discussed the role of APHIS and the Food and Drug Administration in regulating the subject squash line and food products derived from it. In the notice, APHIS solicited written comments from the public as to whether this squash line posed a plant pest risk. The comments were to have been received by APHIS on or before April 2, 1996. During the designated 60-day comment period, APHIS received four comments on the subject petition from universities, an office of the cooperative extension service, and an agricultural consultant. All of the comments were favorable to the petition.

Analysis

Line CZW–3 has been genetically engineered to contain the coat protein genes from cucumber mosaic virus, watermelon mosaic virus 2, and zucchini yellow mosaic virus for resistance to these viruses. The subject squash line also contains the *nptII* gene from the prokaryotic transposon Tn5, which encodes the enzyme neomycin phosphotransferase II and is used as a selectable marker for transformation. Expression of the added genes is controlled in part by 35S promoters and terminators from the plant pathogen cauliflower mosaic virus. The genes used to develop line CZW–3 were stably transferred into the genome of the yellow crookneck squash parental line through the use of the *Agrobacterium tumefaciens* transformation system.

The subject squash line has been considered a regulated article under APHIS' regulations in 7 CFR part 340 because it contains gene sequences derived from plant pathogens. However, evaluation of field data reports from field tests of line CZW–3 conducted in 1993 and 1994 under APHIS permits indicates that there were no deleterious effects on plants, nontarget organisms, or the environment as a result of the environmental release of this squash line.

Determination

Based on its analysis of the data submitted by Asgrow and a review of other scientific data, comments received, and field tests of the subject squash line, APHIS has determined that line CZW–3: (1) Exhibits no plant pathogenic properties; (2) is no more likely to become a weed than virus resistant squash developed by traditional breeding techniques; (3) is unlikely to increase the weediness potential for any other cultivated or wild species with which it can interbreed; (4) will not cause damage to raw or processed agricultural commodities; (5) will not increase the likelihood of the emergence of new plant viruses; and (6) will not harm threatened or endangered species or other organisms, such as bees, that are beneficial to agriculture. Therefore, APHIS has concluded that the subject squash line and any progeny derived from hybrid crosses with other nontransformed squash varieties will be as safe to grow as squash in traditional breeding programs that are not subject to regulation under 7 CFR part 340.

The effect of this determination is that Asgrow's yellow crookneck squash line CZW–3 is no longer considered a regulated article under APHIS' regulations in 7 CFR part 340. Therefore, the requirements pertaining to regulated articles under those regulations no longer apply to the field testing, importation, or interstate movement of the subject squash line or its progeny. However, importation of the subject squash line or seeds capable of propagation is still subject to the restrictions found in APHIS' foreign quarantine notices in 7 CFR part 319.

National Environmental Policy Act

An environmental assessment (EA) has been prepared to examine the potential environmental impacts associated with this determination. The EA was prepared in accordance with: (1) The National Environmental Policy Act of 1969 (NEPA) (42 U.S.C. 4321 *et seq.*), (2) Regulations of the Council on Environmental Quality for implementing the procedural provisions of NEPA (40 CFR parts 1500–1508), (3) USDA regulations implementing NEPA (7 CFR part 1b), and (4) APHIS' NEPA Implementing Procedures (7 CFR part 372). Based on that EA, APHIS has reached a finding of no significant impact (FONSI) with regard to its determination that Asgrow's yellow crookneck squash line CZW–3 and lines developed from it are no longer regulated articles under its regulations in 7 CFR part 340. Copies of the EA and the FONSI are available upon request from the individual listed under **FOR FURTHER INFORMATION CONTACT.**

Done in Washington, DC, this 21st day of June 1996.

Bobby R. Acord,

Acting Administrator, Animal and Plant Health Inspection Service.

[FR Doc. 96–16465 Filed 6–26–96; 8:45 am]

BILLING CODE 3410–34–P

Farm Service Agency

Notice of Request for Extension and Revision of a Currently Approved Information Collection

AGENCY: Farm Service Agency, USDA.

ACTION: Notice and request for comments.

SUMMARY: In accordance with the Paperwork Reduction Act of 1995 (Pub. L. 104–13), this notice announces the Farm Service Agency's (FSA) intention to request an extension for and revision to an information collection currently approved for the farm credit programs guaranteed loan regulations of FSA, formerly administered by the USDA, Farmers Home Administration. These regulations are published under the authority of the Consolidated Farm and Rural Development Act, as amended (CONACT).

DATES: Comments on this notice must be received on or before August 26, 1996, to be assured consideration.

ADDITIONAL INFORMATION: Steven Ford, Senior Loan Officer, Farm Credit Programs, Farm Service Agency, USDA, P. O. Box 2415, AgBox 0522, Washington, D.C. 20013–2415; telephone (202) 720–3889.

SUPPLEMENTARY INFORMATION:

Title: Guaranteed Farm Credit Programs.

OMB Control Number: 0560–0155.

Expiration Date of Approval: September 30, 1996.

Type of Request: Extension and Revision of a Currently Approved Information Collection.

Abstract: The information collected under Office of Management and Budget (OMB) Number 0560–0155, as identified above, is needed to enable FSA to effectively administer the guaranteed loan program under the CONACT.

The Agency requires some of the information it collects to be reported in a standard manner. Although lending institutions generally require and collect information similar to that requested by FSA, there is a wide diversity in reporting practices. The Agency requires some information to be reported on standard forms in order to facilitate an effective and efficient decision making process.

Respondents generally consist of farm operators applying for loans and lenders. Compliance with local, State, and Federal laws is required; and evidence of compliance with these laws may be required. Evidence of compliance with zoning ordinances, environmental standards, equal opportunity standards, historic preservation requirements, etc., may be required when warranted.

The information collection required by this rule will be used by the Agency to approve or determine the need for loans and subordination in accordance with this rule. The Agency considers the information collected to be essential to prudent loan making decisions. Failure to make sound loans would jeopardize the Government's loan portfolio, result in large losses to both the borrower and the Government, and weaken the overall agricultural economy.

Estimate of Burden: Public reporting burden for this information collection is estimated to average .71 hours per response.

Respondents: State or Federally chartered banks, Farm Credit System Institutions, and other lending institutions as well as farm operators.

Estimated Number of Respondents: 21,000 (3000 lenders; 18,000 loan applicants).

Estimated Number of Responses per Respondent: 9.17.

Estimated Total Annual Burden on Respondents: 192,625.

Comments regarding (a) whether the collection of information is necessary for the proper performance of the functions of the Agency, including whether the information will have practical utility; (b) the accuracy of the Agency's estimate of burden including the validity of the methodology and assumptions used; (c) ways to enhance the quality, utility and clarity of the information to be collected; (d) ways to minimize the burden of the collection of information on those who are to respond, including the use of appropriate automated, electronic, mechanical, or other technological collection techniques or other forms of information technology should be sent to the Desk Officer for Agriculture, Office of Information and Regulatory Affairs, Office of Management and Budget, Washington, D.C. 20503 and to Steven Ford, Senior Loan Officer, Farm Credit Programs, Farm Service Agency, USDA, P. O. Box 2415, AgBox 0522, Washington, D.C. 20013–2415; telephone (202) 720–3889. Copies of the

information collection may be obtained from Steven Ford at the above address.

The Office of Management and Budget (OMB) is required to make a decision concerning the collection of information contained in these proposed regulations between 30 and 60 days after submission to OMB. Therefore, a comment to OMB is best assured of having its full effect if OMB receives it within 30 days of publication. This does not affect the deadline for the public to comment on the proposed regulation.

All responses to this notice will be summarized and included in the request for OMB approval. All comments will also become a matter of public record.

Signed at Washington, DC, on June 20, 1996.

Bruce R. Weber,

Administrator, Farm Service Agency.

[FR Doc. 96–16354 Filed 6–26–96; 8:45 am]

BILLING CODE 3410–05–P

Food and Consumer Service

Agency Information Collection Activities: Proposed Collection; Comment Request—School Meals Initiative for Healthy Children

AGENCY: Food and Consumer Service, USDA.

ACTION: Notice.

SUMMARY: In accordance with the Paperwork Reduction Act of 1995, this Notice announces the Food and Consumer Service's (FCS) intention to request Office of Management and Budget (OMB) review of the adjustments to be made to the information collections for the National School Lunch Program and the School Breakfast Program as a result of the final rule, National School Lunch Program and School Breakfast Program: School Meals Initiative for Healthy Children, published in the Federal Register on June 13, 1995. This Notice addresses the information collections in that final rule.

DATES: To be assured of consideration, comments must be received by August 26, 1996.

ADDRESSES: Send comments and requests for copies of this information to: Mr. Terry Hallberg, Chief, Program Analysis and Monitoring Branch, Child Nutrition Division, Food and Consumer Service, U.S. Department of Agriculture, 3101 Park Center Drive, Room 1008, Alexandria, Virginia 22302.

Comments are invited on the following areas: (a) whether the proposed collection of information is necessary for the proper performance of the functions of the agency, including whether the information will have practical utility; (b) the accuracy of the agency's estimate of the burden of the proposed collection of information, including the validity of the methodology and assumptions used; (c) ways to enhance the quality, utility and clarity of the information to be collected; and (d) ways to minimize the burden of the collection of information on those who are to respond, including through the use of appropriate automated, electronic, mechanical, or other technological collection techniques or other forms of information technology.

All responses to this Notice will be summarized and included in the request for OMB approval, and will become a matter of public record.

FOR FURTHER INFORMATION CONTACT: Mr. Terry Hallberg at (703) 305–2600.

SUPPLEMENTARY INFORMATION:

Titles: 7 CFR Part 210, National School Lunch Program, and 7 CFR Part 220, School Breakfast Program.

OMB Numbers: 0584–0006 and 0584–0012, respectively

Expiration Dates: November 30, 1996, and August 31, 1996, respectively.

Type of requests: Revision of existing collections.

Abstract: The final rule, National School Lunch Program and School Breakfast Program: School Meals Initiative for Healthy Children, was published at 60 FR 31188, June 13, 1995. The final rule implemented provisions on nutrition standards, menu planning alternatives and administrative streamlining, and reflects the Department's review of the comments received on those proposals.

In accordance with the Paperwork Reduction Act of 1995, the Department is now providing the public with the opportunity to provide comments on the information collection requirements of the final rule. Organizations and individuals desiring to submit comments regarding this burden estimate or any aspects of these information collection requirements, including suggestions for reducing the burdens, should direct them to the address above.

The information collections referenced reflect the collection requirements of the final rule and do not include any additional requirements. However, all comments and suggestions relating to the burden estimates or information collection requirements will receive full consideration.

Estimate of Burden: Under this Notice, the following existing reporting and recordkeeping activities contained in 7 CFR Parts 210 and 220 would be affected.

	Annual number of respondents	Annual frequency	Average burden per response	Annual burden hours
7 CFR 210.8 (a)(3) edit checks				
Existing	20,249 SFAs	12	2 hours	485,976
New	3,442 SFAs	12	2 hours	82,608
Difference				−403,368
7 CFR 210.10 Nutrient/Analysis Menu Planning				
Existing	0	0	0	0
New	14,235 schools	180	.333	853,246
Difference				+853,246
7 CFR 210.10/Food-Based Menu Planning				
Existing	71,176 schools	180	.25	3,202,920
New	56,941 schools	180	.25	2,562,345

	Annual number of respondents	Annual frequency	Average burden per response	Annual burden hours
Difference				−640,575
7 CFR 210.15 (b)(4) nonprofit				
Existing	20,249 SFAs*	12	52.333	12,716,291
New	0	0	0	0
Difference				−12,716,291
7 CFR 220.8/Nutrient Analysis				
Existing	0	0	0	0
New	12,117 schools	180	.117	255,184
Difference				+255,184
7 CFR 220,8/Food-Based Menu Planning				
Existing	60,585	180	.083	905,140
New	48,468 schools	180	.083	724,112
Difference				−181,028
7 CFR 220.13(i) nonprofit				
Existing	5,568 SFAs	12	34	2,308,464
New	0	0	0	0
Difference				−2,308,464

*SFA means school food authority.

Estimated Total Annual Burden on Respondents: The total estimated annual burden for those respondents administering and/or operating the National School Lunch Program is 9,136,382 hours, with a reduction of 13,085,579 burden hours attributed to the elimination of requirements associated with performing edit checks and demonstrating nonprofitability. The total estimated annual burden for the School Breakfast Program is 3,667,170 hours, with a reduction of 2,650,801 burden hours attributed to the elimination of nonprofitability requirements.

Dated: June 19, 1996.

William E. Ludwig,

Administrator.

[FR Doc. 96–16356 Filed 6–26–96; 8:45 am]

BILLING CODE 3410–30–P

Agency Information Collection Activities: Proposed Collection; Comment Request—Summer Food Service Program for Children

AGENCY: Food and Consumer Service, USDA.

ACTION: Notice.

SUMMARY: In accordance with the Paperwork Reduction Act of 1995, this Notice announces the Food and Consumer Service's (FCS) intention to request Office of Management and Budget (OMB) review of the information collections for the Summer Food Service Program for Children (SFSP).

DATES: To be assured of consideration, comments must be received by August 26, 1996.

ADDRESS: Send comments and requests for copies of this information collection to: Mr. Terry Hallberg, Chief, Program Analysis and Monitoring Branch, Child Nutrition Division, Food and Consumer Service, U.S. Department of Agriculture, 3101 Park Center Drive, Room 1008, Alexandria, Virginia 22302.

Comments are invited on: (a) Whether the proposed collection of information is necessary for the proper performance of the functions of the agency, including whether the information will have practical utility; (b) the accuracy of the agency's estimate of the burden of the proposed collection of information, including the validity of the methodology and assumptions used; (c) ways to enhance the quality, utility and clarity of the information to be collected; and (d) ways to minimize the burden of the collection of information on those who are to respond, including through the use of appropriate automated, electronic, mechanical, or other technological collection techniques or other forms of information technology.

All responses to this Notice will be summarized and included in the request for OMB approval, and will become a matter of public record.

FOR FURTHER INFORMATION: Mr. Terry Hallberg at (703) 305–2600.

SUPPLEMENTARY INFORMATION:

Title: 7 CFR Part 225, Summer Food Service Program for Children.

OMB Number: 0584–0280.

Expiration Date: July 31, 1996.

Type of Request: Extension of clearance for existing collection.

Abstract: Section 13 of the National School Lunch Act (NSLA) (42 U.S.C. 1761 authorizes the SFSP. Subsection 13(m) of the NSLA directs that ''States and service institutions participating in programs under this section shall keep such accounts and records as may be necessary to enable the Secretary to determine whether there has been compliance with this section and the regulations issued hereunder. Such accounts and records shall at all times be available for inspection and audit by representatives of the Secretary and shall be preserved for such period of time, not in excess of five years, as the Secretary determines necessary.''

SFSP provides assistance to States to initiate and maintain nonprofit food service programs for needy children during summer months and at other approved times. The food service to be provided under SFSP is intended to serve as a substitute for those programs (the National School Lunch and School Breakfast Programs) for children who primarily are from needy areas. Under this Program, a sponsor—a public or

nonprofit private school food authority; a public or nonprofit private residential summer camp; a unit of local, municipal, county, or State government; a public or private nonprofit college or university currently participating in the National Youth Sports Programs (NYSP); or a private nonprofit organization which develops a summer or other school vacation program providing food service similar to that offered during the school year—receives reimbursement for serving nutritious well-balanced meals to eligible children at food service sites.

Estimate of Burden: The reporting burden for this collection of information is estimated at 204,395 burden hours. The major areas of the reporting burden are attributed to the processing of applications for participation by State agencies, sponsors and camps; and program monitoring of sites by State agencies and sponsors, including the inspection of food preparation facilities; i.e., 63,189 and 86,779 hours, respectively. The recordkeeping burden is estimated at 17,574 burden hours. Free and reduced price eligibility determination for participants in camps and sites not identified as areas in which poor economic conditions exist, comprises the majority of the recordkeeping burden, i.e., 16,694 hours.

Respondents: State agencies, sponsors, food service management companies, camps, households.

Estimated Number of Respondents: 79,350 respondents.

Estimated Number of Responses per Respondent: 4.2 responses.

Estimated Total Annual Burden on Respondents: 221,969 burden hours.

Dated: June 20, 1996.

William E. Ludwig,

Administrator.

[FR Doc. 96–16357 Filed 6–26–96; 8:45 am]

BILLING CODE 3410–30–P

Forest Service

Cascade Pt. Access Rd. and Development, Tongass National Forest, Chatham Area, Juneau Ranger District, Juneau, AK

AGENCY: Forest Service, USDA.

ACTION: Notice of intent to prepare an environmental impact statement.

SUMMARY: The Department of Agriculture, Forest Service will prepare an Environmental Impact Statement (EIS) to disclose the environmental impacts of authorizing construction of approximately 3 miles of new road on National Forest System (NFS) lands near Echo Cove, approximately 40 miles north of Juneau, Alaska. The proposed action is to issue a road easement authorizing Goldbelt, Inc., an urban Native Corporation authorized by the Alaska Native Claims Settlement Act, to construct a 28 ft. wide gravel road for the purpose of accessing Goldbelt, Inc. private lands. Initial development on the private land would include a 3 acre staging area and an equipment and log transfer bulkhead on the beach. Although the development on private land would not be subject to Forest Service authorization, it would require a US Army, Corps of Engineers, Section 404 permit for fill in wetlands, as well as a Section 10 permit for a structure below Mean High Water in Berners Bay. Proposed road construction would also probably require a Section 404 permit for fill in wetlands. Since the proposed road construction would likely result in development on private land, both will be considered in this EIS. The Corps of Engineers has consented to be a cooperating agency.

Dunn Environmental Services, of Juneau Alaska, has been selected as a 3rd party contractor to prepare the EIS.

The Forest Service is seeking information and comments from Federal, State, and local agencies as well as individuals and organizations who may be interested in, or affected by, the proposed action.

DATES: Comments concerning the scope of this analysis should be received on or before July 29, 1996.

ADDRESSES: Send written comments or requests for additional information to: Jennette de Leeuw, USDA Forest Service, Juneau Ranger District, 8465 Old Dairy Rd., Juneau, Alaska, 99801, (907) 586–8800; or Art Dunn, Dunn Environmental Services, 19890 Cohen Dr., Juneau Alaska 99801 (907) 463–3243.

SUPPLEMENTARY INFORMATION: The purpose and need for the proposed action is to provide access to Goldbelt, for development of privately owned lands in Echo Cove. Reasonably foreseeable actions on Goldbelt, Inc. private land include: a fast ferry to Haines and Skagway; a lodge/restaurant, a convenience store and gas station; electrical and water/sewage facilities, and commercial fishing support facilities. A Master Plan for Goldbelt, Inc. lands at Echo Cove has been submitted to the City and Borough of Juneau for review and approval. The activities mentioned above are described in detail in that document. Other activities planned could include housing and related facilities for workers at the historic Jualin Mine Exploration site, approximately 5 miles away. No proposal for development of the Jualin Mine has been received, and only continued exploration at the site will be considered as reasonably foreseeable.

The no action and proposed action alternatives will be considered, as well as alternatives which address significant issues and meet the purpose and need for the proposed action.

The proposed road alignment is located on a 100 ft. wide strip of NFS land acquired from Goldbelt, Inc. in a land trade in 1984, to preserve Forest Service land access to NFS lands to the north. An Environmental Assessment for a proposed timber sale at that time also examined several alternative alignments and chose this proposed alignment as the most feasible.

Preliminary issues that have been identified include impacts to recreational opportunities in Echo Cove and the National Forest System lands around Berners Bay (Congressionally Legislated LUD II); disruption of brown and black bear habitat, mountain goat wintering habitat, and pacific herring spawning habitat; and visual and noise impacts to Pt. Bridget State Park, approximately 2 miles west of Cascade Pt.

Preliminary scoping comments on the proposal were solicited from February 8 through March 1, 1996. An open house meeting was held on February 8, 1996 in Centennial Hall, Juneau, Alaska. Over 70 written comments were received in response to the meeting.

Because of this extensive public involvement and information from a number of existing studies in the area for other proposals, the draft EIS should be available for public distribution in late August of 1996. The final EIS is scheduled to be completed in October of 1996. It is anticipated that permit applicants for Sec. 404 and Sec. 10 Corps of Engineers permits will be incorporated in the DEIS.

The comment period on the DEIS will be 45 days from the date the Environmental Protection Agency publishes the notice of a availability in the Federal Register.

Gary Morrison, the Forest Supervisor, Tongass National Forest, Chatham Area, is the official responsible for making the decision. The decision to be made is whether or not to issue a road easement for construction of an access road on National Forest System land as proposed, and if the easement is granted, decide the mitigation measures that will be required. The US Army, Corps of Engineers will issue a separate decision document, based on the

common EIS, regarding permits under their jurisdiction.

The Forest Service believes, at this early stage, it is important to give reviewers notice of several court rulings related to public participation in the environmental review process. First, reviewers of draft environmental impact statements must structure their participation in the environmental review of the proposal so that it is meaningful and alerts an agency to the reviewer's position and contentions. *Vermont Yankee Nuclear Power Corp. v. NRDC, 435 U.S. 519,553 (1978).* Also, environmental objections that could be raised at the draft environmental impact statement stage but that are not raised until after the completion of the final environmental impact statement may be waived or dismissed by the courts. *City of Angoon* v. *Hodel. 803 F. 2d. 1016, 1022 (9th Cir. 1986)* and *Wisconsin Heritages, Inc.* v. *Harris, 490 F Supp. 1334, 1338 (E.D. Wis. 1980).* Because of these court rulings, it is very important that those interested in this proposed action participate by the close of the 45 day comment period so that substantive comment and objections are made available to the Forest Service at a time when it can meaningfully consider them and respond to them in the final environmental impact statement. To assist the Forest Service in identifying and considering issues and concerns on the proposed action, comments on the draft environmental impact statement should be as specific as possible. It is also helpful if comments refer to specific pages or chapters of the draft statement. Comments may also address the adequacy of the draft environmental impact statement or the merits of the alternatives formulated and discussed in the statement. Reviewers may wish to refer to the Council on Environmental Quality Regulations for implementing the procedural provisions of the National Environmental Policy Act at 40 CFR 1503.3 in addressing these points.

The Final EIS and Record of Decision is expected to be released in August 1996. The Forest Supervisor, Chatham Area, Tongass National Forest will, as the responsible official for the EIS, will make a decision regarding this proposal considering the comments, responses, and environmental consequences discussed in the Final Eis, and applicable laws, regulations, and policies. The decision and supporting reasons will be documented in the Record of Decision.

Dated: June 13, 1996.

Gary Morrison,

Forest Supervisor.

[FR Doc. 96–16364 Filed 6–26–96; 8:45 am]

BILLING CODE 3410–11–M

Deschutes Provincial Interagency Executive Committee (PIEC), Advisory Committee

AGENCY: Forest Service, USDA.

ACTION: Notice of meeting.

SUMMARY: The Deschutes PIEC Advisory Committee will meet on July 19, 1996 at the Prineville BLM office in Prineville, Oregon (3050 E.Third St.) Start time is 9:00 a.m. Agenda items include: (1) Consideration of rangelands standards and guidelines for the Province; (2) Preview of Eastside Ecosystems DEIS; and (3) Open public forum. All Deschutes Province Advisory Committee meetings are open to the public.

FOR FURTHER INFORMATION CONTACT: Harry Hoogesteger, Province Liaison, USDA, Fort Rock Ranger District, 1230 N.E. 3rd, Bend, Oregon 97701, 541–383–4704.

Dated: June 18, 1996.

Sally Collins,

Deschutes National Forest Supervisor.

[FR Doc. 96–16359 Filed 6–26–96; 8:45 am]

BILLING CODE 3410–11–M

Rural Business-Cooperative Service

Inviting Preapplications for Technical Assistance for Rural Transportation Systems: Correction

AGENCY: Rural Business-Cooperative Service, USDA.

ACTION: Notice, correction.

SUMMARY: The Rural Business-Cooperative Service (RBS) corrects a notice published June 10, 1996 (61 FR 29340). This action is taken to extend all dates in the submission process by 15 days and remove ineligible entities which were inadvertently included in the original notice.

FOR FURTHER INFORMATION CONTACT: Carole S. Boyko, Rural Development Specialist, Specialty Lenders Division, Room 2245 South Agriculture Building, 1400 Independence Avenue, SW., Washington, D.C. 20250–3220, telephone: (202) 720–1400.

SUPPLEMENTARY INFORMATION: On June 10, 1996, the Rural Business-Cooperative Service published a notice to invite preapplications for technical assistance for rural transportation systems. As published, the notice contains errors as to statutory reference, eligible entities, and an office address which may be misleading and is in need of clarification. In addition, it has been determined that required submission dates should be extended by 15 days.

Accordingly, the notice published June 10, 1996 (61 FR 29340), is corrected as follows:

DATES: The deadline for receipt of a preapplication in the Rural Development State Office is July 15, 1996. Preapplications received after that date will not be considered for FY 1996 funding.

ADDRESSES: The address for New Mexico, page 29341, column 2, sixth down, should read: ''State Director, Rural Development, 6200 Jefferson Street, NE, Room 255, Albuquerque, NM 87109.

SUPPLEMENTARY INFORMATION: The first paragraph, column 3, page 29341, is corrected by removing ''and 310B (j)'' following the words ''Refer to section 310B (c)''.

The second paragraph, column 3, is amended by removing the words ''assisting public bodies and private'' and inserting the words ''assisting the private''.

FISCAL YEAR 1996 PREAPPLICATION SUBMISSION: This subsection is amended by changing the dates ''July 1, 1996,'' ''July 15, 1996,'' and ''August 15, 1996,'' to read ''July 15, 1996, '' July 30, 1996,'' and ''August 30, 1996,'' respectively.

Dated: June 20, 1996.

Inga Smulkstys,

Deputy Under Secretary, Operations and Management Rural Development.

[FR Doc. 96–16358 Filed 6–26–96; 8:45 am]

BILLING CODE 3410–07–U

COMMISSION ON CIVIL RIGHTS

Agenda and Notice of Public Meeting of the North Carolina Advisory Committee

Notice is hereby given, pursuant to the provisions of the rules and regulations of the U.S. Commission on Civil Rights, that a meeting of the North Carolina Advisory Committee to the Commission will convene at 9:00 a.m. and recess at 12:00 p.m. on Thursday, July 18, 1996, at the Charlotte Convention Center, 501 S. College Street, Charlotte, North Carolina 28202. The purpose of the meeting is to discuss a draft report on racial tensions in North Carolina. The meeting will reconvene at 1:00 p.m. and adjourn at 5:00 p.m. to hear from invited guests, including the governor, State representatives, mayors, police and fire chiefs, redigious

communities involved, and the civil rights community on the recent rash of church burnings in the South, with an emphasis on North Carolina churches, and race relations generally in North Carolina.

Persons desiring additional information, or planning a presentation to the Committee, should contact Committee Chairperson Asa Spaulding, 919–233–7612, or Bobby D. Doctor, Director of the Southern Regional Office, 404–730–2476 (TDD 404–730–2481). Hearing-impaired persons who will attend the meeting and require the services of a sign language interpreter should contact the Regional Office at least five (5) working days before the scheduled date of the meeting.

The meeting will be conducted pursuant to the provisions of the rules and regulations of the Commission.

Dated at Washington, DC, June 21, 1996.

Carol-Lee Hurley,

Chief, Regional Programs Coordination Unit.

[FR Doc. 96–16434 Filed 6–26–96; 8:45 am]

BILLING CODE 6335–01–P

DEPARTMENT OF COMMERCE

National Oceanic and Atmospheric Administration

[I.D. 061996C]

Gulf of Mexico Fishery Management Council; Public Meeting

AGENCY: National Marine Fisheries Service (NMFS), National Oceanic and Atmospheric Administration (NOAA), Commerce.

ACTION: Notice of public meeting.

SUMMARY: The Gulf of Mexico Fishery Management Council's (Council) Mariculture Review Policy Panel will convene a public meeting.

DATES: The meeting will be held on July 30–31, 1996, from 8 a.m. to 5 p.m., each day.

ADDRESSES: The meeting will be held at the New Orleans Airport Hilton, 901 Airline Highway, Kenner, LA; telephone: 504–469–5000.

Council address: Gulf of Mexico Fishery Management Council, 5401 West Kennedy Boulevard, Suite 331, Tampa, FL 33609.

FOR FURTHER INFORMATION CONTACT: Richard Hoogland, Biologist, Gulf of Mexico Fishery Management Council; telephone: 813–228–2815.

SUPPLEMENTARY INFORMATION: This panel will meet to assess the adequacy of current Council policy on mariculture. The panel's charge will be to critically review current Council policy and, if deemed appropriate, develop proposed revisions for Council's consideration and future implementation. Council's interest in having its policy reviewed, and possibly updated, was prompted by the increasing number of mariculture activities taking place in the Gulf of Mexico region and their potential impact on species for which the Council has management responsibilities.

Special Accommodations

This meeting is physically accessible to people with disabilities. Requests for sign language interpretation or other auxiliary aids should be directed to Anne Alford at the Council (see **ADDRESSES**) by July 23, 1996.

Dated: June 21, 1996.

Donald J. Leedy,

Acting Director, Office of Fisheries Conservation and Management, National Marine Fisheries Service.

[FR Doc. 96–16371 Filed 6–26–96; 8:45 am]

BILLING CODE 3510–22–F

Foreign-Trade Zones Board

[Order No. 831]

Grant of Authority for Subzone Status; Star Enterprise (Oil Refinery) Newcastle County, Delaware

Pursuant to its authority under the Foreign-Trade Zones Act of June 18, 1934, as amended (19 U.S.C. 81a–81u), the Foreign-Trade Zones Board (the Board) adopts the following Order:

Whereas, by an Act of Congress approved June 18, 1934, an Act ''To provide for the establishment * * * of foreign-trade zones in ports of entry of the United States, to expedite and encourage foreign commerce, and for other purposes,'' as amended (19 U.S.C. 81a–81u) (the Act), the Foreign-Trade Zones Board (the Board) is authorized to grant to qualified corporations the privilege of establishing foreign-trade zones in or adjacent to U.S. Customs ports of entry;

Whereas, the Board's regulations (15 CFR Part 400) provide for the establishment of special-purpose subzones when existing zone facilities cannot serve the specific use involved;

Whereas, an application from the Delaware Economic Development Office, on behalf of the State of Delaware, grantee of Foreign-Trade Zone 99, for authority to establish special-purpose subzone status at the oil refinery complex of Star Enterprise, in Newcastle County, Delaware, was filed by the Board on November 13, 1995, and notice inviting public comment was given in the Federal Register (FTZ Docket 75–95, 60 FR 58597, 11–28–95); and,

Whereas, the Board adopts the findings and recommendations of the examiner's report, and finds that the requirements of the FTZ Act and Board's regulations would be satisfied, and that approval of the application would be in the public interest if approval is subject to the conditions listed below;

Now, therefore, the Board hereby authorizes the establishment of a subzone (Subzone 99E) at the oil refinery of Star Enterprise, in Newcastle County, Delaware, at the location described in the application, subject to the FTZ Act and the Board's regulations, including § 400.28, and subject to the following conditions:

1. Foreign status (19 CFR §§ 146.41, 146.42) products consumed as fuel for the refinery shall be subject to the applicable duty rate.

2. Privileged foreign status (19 CFR § 146.41) shall be elected on all foreign merchandise admitted to the subzone, except that non-privileged foreign (NPF) status (19 CFR § 146.42) may be elected on refinery inputs covered under HTSUS Subheadings # 2709.00.1000—# 2710.00.1050 and # 2710.00.2500 which are used in the production of:

—petrochemical feedstocks and refinery by-products (examiners report, Appendix D);
—products for export; and,
—products eligible for entry under HTSUS # 9808.00.30 and 9808.00.40 (U.S. Government purchases).

3. The authority with regard to the NPF option is initially granted until September 30, 2000, subject to extension.

Signed at Washington, DC, this 20th day of June 1996.

Robert S. LaRussa,

Acting Assistant Secretary of Commerce for Import Administration, Alternate Chairman, Foreign-Trade Zones Board.

Attest:

John J. Da Ponte, Jr.,

Executive Secretary.

[FR Doc. 96–16471 Filed 6–26–96; 8:45 am]

BILLING CODE 3510–DS–P

[Order No. 827]

Approval of Export Manufacturing Activity Within Foreign-Trade Zone 9, Honolulu, Hawaii; NIC Americas, Inc. (Medical Devices)

Pursuant to its authority under the Foreign-Trade Zones Act of June 18, 1934, as amended (19 U.S.C. 81a–81u),

the Foreign-Trade Zones Board (the Board) adopts the following Order:

Whereas, § 400.28(a)(2) of the Board's regulations, requires approval of the Board prior to commencement of new manufacturing/processing activity within existing zone facilities;

Whereas, Department of Business, Economic Development & Tourism of the State of Hawaii, grantee of FTZ 9, has requested authority under § 400.32(b)(1) of the Board's regulations on behalf of NIC Americas, Inc., for the manufacture of medical devices under zone procedures for export within FTZ 9 (filed 1/25/96, A(32b1)–2–96; FTZ Docket 40–96, assigned 5/13/96);

Whereas, pursuant to § 400.32(b)(1), the Commerce Department's Assistant Secretary for Import Administration has the authority to act for the Board in making such decisions on new manufacturing/processing activity under certain circumstances, including situations where the proposed activity is for export only (§ 400.32(b)(1)(ii)); and,

Whereas, the Assistant Secretary for Import Administration, acting for the Board, pursuant to § 400.32(b)(1), concurring in the findings and recommendations of the FTZ Staff and Executive Secretary, approves the request;

Now, therefore, the application for export manufacturing authority is approved, subject to the Act and the Board's regulation, including § 400.28.

Signed at Washington, DC, this 20th day of June 1996.

Robert S. LaRussa,

Acting Assistant Secretary of Commerce for Import Administration, Alternate Chairman, Foreign-Trade Zones Board.

Attest:

John J. Da Ponte, Jr.,

Executive Secretary.

[FR Doc. 96–16472 Filed 6–26–96; 8:45 am]

BILLING CODE 3510–DS–P

[Order No. 832]

Expansion of Foreign-Trade Zone 21, Charleston, South Carolina, Area

Pursuant to its authority under the Foreign-Trade Zones Act of June 18, 1934, as amended (19 U.S.C. 81a–81u), the Foreign-Trade Zones Board (the Board) adopts the following Order:

Whereas, an application from the South Carolina State Ports Authority, grantee of Foreign-Trade Zone 21, Charleston, South Carolina, area, for authority to expand its general-purpose zone to include a site in Myrtle Beach, South Carolina, was filed by the Board on August 15, 1995 (FTZ Docket 44–95, 60 FR 43761, 8/23/95); and,

Whereas, notice inviting public comment was given in the Federal Register and the application has been processed pursuant to the FTZ Act and the Board's regulations; and,

Whereas, the Board adopts the findings and recommendations of the examiner's report, and finds that the requirements of the FTZ Act and Board's regulations are satisfied, and that the proposal is in the public interest;

Now, therefore, the Board hereby orders:

The application to expand FTZ 21 is approved, subject to the Act and the Board's regulations, including Section 400.28.

Signed at Washington, DC, this 20th day of June 1996.

Robert S. LaRussa,

Acting Assistant Secretary of Commerce for Import Administration, Alternate Chairman, Foreign-Trade Zones Board.

Attest:

John J. Da Ponte, Jr.,

Executive Secretary.

[FR Doc. 96–16473 Filed 6–26–96; 8:45 am]

BILLING CODE 3510–DS–P

[Order No. 830]

Grant of Authority for Subzone Status; Marathon Oil Company (Oil Refinery), Texas City, Texas

Pursuant to its authority under the Foreign-Trade Zones Act of June 18, 1934, as amended (19 U.S.C. 81a-81u), the Foreign-Trade Zones Board (the Board) adopts the following Order:

Whereas, by an Act of Congress approved June 18, 1934, an Act ''To provide for the establishment * * * of foreign-trade zones in ports of entry of the United States, to expedite and encourage foreign commerce, and for other purposes,'' as amended (19 U.S.C. 81a-81u) (the Act), the Foreign-Trade Zones Board (the Board) is authorized to grant to qualified corporations the privilege of establishing foreign-trade zones in or adjacent to U.S. Customs ports of entry;

Whereas, the Board's regulations (15 CFR Part 400) provide for the establishment of special-purpose subzones when existing zone facilities cannot serve the specific use involved;

Whereas, an application from the Texas City Foreign Trade Zone Corporation, grantee of Foreign-Trade Zone 199, for authority to establish special-purpose subzone status at the oil refinery complex of Marathon Oil Company, in Texas City, Texas, was filed by the Board on November 6, 1995, and notice inviting public comment was given in the Federal Register (FTZ Docket 71–95, 60 FR 57217, 11–14–95); and,

Whereas, the Board adopts the findings and recommendations of the examiner's report, and finds that the requirements of the FTZ Act and Board's regulations would be satisfied, and that approval of the application would be in the public interest if approval is subject to the conditions listed below;

Now, therefore, the Board hereby authorizes the establishment of a subzone (Subzone 199B) at the oil refinery of Marathon Oil Company, in Texas City, Texas, at the locations described in the application, subject to the FTZ Act and the Board's regulations, including § 400.28, and subject to the following conditions:

1. Foreign status (19 CFR §§ 146.41, 146.42) products consumed as fuel for the refinery shall be subject to the applicable duty rate.

2. Privileged foreign status (19 CFR § 146.41) shall be elected on all foreign merchandise admitted to the subzone, except that non-privileged foreign (NPF) status (19 CFR § 146.42) may be elected on refinery inputs covered under HTSUS Subheadings # 2709.00.1000—# 2710.00.1050 and # 2710.00.2500 which are used in the production of:

—petrochemical feedstocks and refinery by-products (examiners report, Appendix D);

—products for export; and,

—products eligible for entry under HTSUS # 9808.00.30 and 9808.00.40 (U.S. Government purchases).

3. The authority with regard to the NPF option is initially granted until September 30, 2000, subject to extension.

Signed at Washington, DC, this 20th day of June 1996.

Robert S. LaRussa,

Acting Assistant Secretary of Commerce for Import Administration, Alternate Chairman, Foreign-Trade Zones Board.

Attest.

John J. Da Ponte, Jr.,

Executive Secretary.

[FR Doc. 96–16474 Filed 6–26–96; 8:45 am]

BILLING CODE 3510–DS–P

International Trade Administration

[A–533–502]

Certain Welded Carbon Steel Standard Pipes and Tubes From India; Initiation of Antidumping Duty Administrative Review and New Shippers Antidumping Duty Administrative Review

AGENCY: Import Administration, International Trade Administration, Department of Commerce.

ACTION: Notice of Initiation of Antidumping Duty Administrative Review and New Shippers Antidumping Duty Administrative Review.

SUMMARY: The Department of Commerce (the Department) has received requests to conduct an administrative review and new shipper administrative reviews of the antidumping duty order on certain welded carbon steel standard pipes and tubes from India, which has a May anniversary date. In accordance with the Department's regulations, we are initiating both an administrative review and a new shippers review.

EFFECTIVE DATE: June 27, 1996.

FOR FURTHER INFORMATION CONTACT: Davina Hashmi or Michael Rill, Office of Antidumping Compliance, Import Administration, International Trade Administration, U.S. Department of Commerce, 14th Street and Constitution Avenue, NW., Washington, DC 20230, telephone: (202) 482–0180 or (202) 482–4733.

SUPPLEMENTARY INFORMATION:

Background

On April 30, 1996, and May 22, 1996, the Department received requests in accordance with 19 CFR 353.22 (h) (1995), for new shipper reviews of the antidumping duty order on certain welded carbon steel standard pipes and tubes from India, which has a May anniversary date, with respect to two producers/exporters.

The Department has also received a timely request on May 24, 1996, in accordance with 19 CFR 353.22(a), for an administrative review of this antidumping duty order with respect to the same two producers/exporters.

Initiation of Review

In accordance with section 19 CFR 353.22(c), and 353.22(h), we are initiating an administrative review of the following antidumping duty order and producers/exporters:

Antidumping duty proceeding	Period to be reviewed
INDIA	
Certain Welded Carbon Steel Pipes and Tubes, A–533–502	
Lloyds Metals & Engineers Ltd.	05/01/95–04/30/96
Rajinder Pipes Ltd.	05/01/95–04/30/96

Because the requirements for initiation of a new shipper review have been met with respect to both producers/exporters, we intend to conduct the review as a new shippers review. Accordingly, we will issue the preliminary results of these reviews not later than 180 days from the date of publication of this notice and the final results within 90 days after issuance of the preliminary results, unless these time limits are extended in accordance with section 751(a)(2)(B)(iv) of the Tariff Act of 1930, as amended (the Act). We also will instruct the U.S. Customs Service to allow, at the option of the importer, the posting, until the completion of these reviews, of a bond or security in lieu of a cash deposit for each entry of the merchandise exported by the above-listed companies, in accordance with 19 CFR 353.22 (h)(4) (1995).

Interested parties must submit applications for disclosure under administrative protective orders in accordance with 19 CFR 353.34 (b).

These initiations and this notice are in accordance with section 751 (a) of the Act (19 U.S.C. 1675(a)) and 19 CFR 353.22(c) and 353.22(h).

Dated: June 19, 1996.

Joseph A. Spetrini,

Deputy Assistant Secretary for Compliance.

[FR Doc. 96–16475 Filed 6–26–96; 8:45 am]

BILLING CODE 3510–DS–M

National Oceanic and Atmospheric Administration

[I.D. 061496B]

Gulf of Mexico Fishery Management Council; Correction

AGENCY: National Marine Fisheries Service (NMFS), National Oceanic and Atmospheric Administration (NOAA), Commerce.

ACTION: Correction to Sentence in Meeting Agenda

SUMMARY: The agenda pertaining to public meetings of the Gulf of Mexico Fishery Management Council (Council) was published on June 21, 1996.

DATES: The meetings will be held on July 15–18, 1996.

ADDRESSES: These meetings will be held at the Sheraton Grand Hotel, 4860 West Kennedy Boulevard, Tampa, FL; telephone: 813–286–4050.

Council address: Gulf of Mexico Fishery Management Council, 5401 West Kennedy Boulevard, Suite 331, Tampa, FL 33609.

FOR FURTHER INFORMATION CONTACT: Wayne E. Swingle, Executive Director, Gulf of Mexico Fishery Management Council; telephone: (813) 228–2815.

SUPPLEMENTARY INFORMATION: The initial agenda was published on June 21, 1996 (61 FR 31924–31925). A sentence in the agenda pertaining to the Council's public meeting is being corrected because it contained a typographical error in the second column, line 20. The revised sentence is as follows: ''The Council's proposed action is to prohibit the use of traps south of 24°54′, north latitude (i.e. off Dry Tortugas, Florida).''

Special Accommodations

These meetings are physically accessible to people with disabilities. Requests for sign language interpretation or other auxiliary aids should be directed to Anne Alford at the Council (see **ADDRESSES**) by July 8, 1996.

Dated: June 21, 1996.

Donald J. Leedy,

Acting Director, Office of Fisheries Conservation and Management, National Marine Fisheries Service.

[FR Doc. 96–16486 Filed 6–26–96; 8:45 am]

BILLING CODE 3510–22–F

[I.D. 062196B]

South Atlantic Fishery Management Council; Public Meeting

AGENCY: National Marine Fisheries Service (NMFS), National Oceanic and Atmospheric Administration (NOAA), Commerce.

ACTION: Notice of public meeting.

SUMMARY: The South Atlantic Fishery Management Council (Council) will hold a public meeting of its Ad Hoc Bycatch Reduction Device (BRD) Advisory Panel.

DATES: The meeting will be held on July 15, 1996, 1:00 p.m. to 5:30 p.m. and July 16, 1996, 8:30 a.m. to 5:00 p.m.

ADDRESSES: The meeting will be held at the Town and Country Inn, 2008 Savannah Highway, Charleston, SC 29407; telephone: (803) 571-1000.

Council address: South Atlantic Fishery Management Council, One Southpark Circle, Suite 306; Charleston, SC 29407-4699.

FOR FURTHER INFORMATION CONTACT: Susan Buchanan, Public Information Officer; telephone: (803) 571-4366; fax: (803) 769-4520; E-mail: Susan_Buchanan@safmc.nmfs.gov.

SUPPLEMENTARY INFORMATION:

The BRD Advisory Panel will meet to review the testing protocol used in the Cooperative Bycatch Research Project and will develop, modify, and specify the statistical guidelines for future BRD testing protocol and performance criteria.

Special Accommodations

These meetings are physically accessible to people with disabilities. Requests for sign language interpretation or other auxiliary aids should be directed to the Council office (see **ADDRESSES**) by July 8, 1996.

Dated: June 21,1996.

Donald J. Leedy,

Acting Director, Office of Fisheries Conservation and Management, National Marine Fisheries Service.

[FR Doc. 96–16487 Filed 6–26–96; 8:45 am]

BILLING CODE 3510–22–F

DEPARTMENT OF DEFENSE

Department of the Air Force

Community Redevelopment Authority and Available Surplus Buildings and Land at McClellan Air Force Base, Located in Sacramento County, CA

SUMMARY: This notice provides information regarding the surplus property at McClellan Air Force Base (AFB), Sacramento, CA and information about the local redevelopment authority that has been established to plan the reuse of McClellan AFB. The property is located approximately 7 miles northeast of downtown Sacramento and is serviced by Sacramento Regional Transit. The property is accessible from Interstate 80.

FOR FURTHER INFORMATION CONTACT: Contact Mr. Tom Kempster, Senior Representative, Air Force Base Conversion Agency, 3237 Peacekeeper Way, Suite 13, McClellan AFB, CA 95652–1056, telephone (916) 643–6420. For more detailed information regarding particular properties identified in this notice (i.e., acreage, floor plans, sanitary facilities, exact street address, etc.) contact Mr. Terry Glenn, Closure and Privatization Support Division, 77 Civil Engineering Group, at McClellan AFB, telephone (916) 643–4501.

SUPPLEMENTARY INFORMATION: This surplus property is available under the provisions of the Federal Property and Administrative Services Act of 1949 and the Base Closure Community Redevelopment and Assistance Act of 1994.

Notice of Surplus Property

Pursuant to paragraph (7)(B) of section 2905(b) of the Defense Base Closure and Realignment Act of 1990, as amended by the Base Closure Community Redevelopment and Homeless Assistance Act of 1994 (Public Law 103–421), the following information regarding the redevelopment authority and surplus property at McClellan AFB, Sacramento, CA is published in the Federal Register.

Local Redevelopment Authority

The local redevelopment authority for McClellan AFB, Sacramento, CA for purposes of implementing the provisions of the Defense Base Closure and Realignment Act of 1990, as amended, is the Sacramento County Board of Supervisors. The Executive Director, Military Base Conversion, Sacramento County, is Mr. Robert Leonard. All inquiries should be addressed to Mr. Randall Yim, Deputy Director of Military Base Conversion, Sacramento County, 3237 Peacekeeper Way, Suite 16, McClellan AFB, CA 95652–1059, telephone (916) 643–6877.

Surplus Property Descriptions

The following is a listing of the land and facilities at McClellan AFB, Sacramento, CA that are surplus to the federal government.

Land

Approximately 2,780 acres of land at McClellan AFB, approximately 178 acres of land at the Capehart Military Family Housing Annex, and approximately 2 acres of land at the Sacramento River Dock Annex. These areas will be available between April 1998 and July 13, 2001.

Buildings

Improvements include single and multi-family housing, office, industrial and commercial buildings, community support facilities including gas station and recreational facilities, and hangars and support buildings adjacent to the airfield.

Expressions of Interest

Pursuant to paragraph 7(C) of section 2905(b) of the Defense Base Closure and Realignment Act of 1990, as amended by the Base Closure Community Redevelopment and Homeless Assistance Act of 1994, State and local governments, representatives of the homeless, and other interested parties located in the vicinity of McClellan AFB, Sacramento, CA shall submit to the Community Services, Sacramento County Department of Human Assistance, 2433 Marconi Avenue, Sacramento, CA 95821, a notice of interest, of such governments, representatives, and parties in the above described surplus property, or any portion thereof. A notice of interest shall describe the need of the government, representative, or party concerned, for the desired surplus property. Pursuant to paragraph 7(C) of section 2905(b), the Sacramento County Department of Human Assistance shall assist interested parties in evaluating the surplus property for the intended use and publish in a newspaper of general circulation within California the date by which expressions of interest must be submitted.

Patsy J. Conner,

Air Force Federal Register Liaison Officer.

[FR Doc. 96–16436 Filed 6–26–96; 8:45 am]

BILLING CODE 3910–01–W

Department of the Army

Advisory Committee Notice (Yakima Training Center Cultural and Natural Resources Committee Policy Committee)

AGENCY: Headquarters, I Corps and Ft. Lewis, Ft. Lewis, WA.

ACTION: Notice of open meeting.

SUMMARY: In accordance with Section 10(a)(2) of the Federal Advisory Committee Act (P.L. 92–463) announcement is made of the following committee meeting.

Name of Committee: Yakima Training Center Cultural and Natural Resources Committee Policy Committee.

Date: July 24, 1996.

Place: Yakima Training Center, Building 266, Yakima, Washington.

Time: 1:30 p.m.

Proposed Agenda: Draft Cultural and Natural Resources Management Plan review. All proceedings are open.

For Further Information Contact: Stephen Hart, Chief, Civil Law, (206) 967–0763.

Gregory D. Showalter,

Army Federal Register Liaison Officer.

[FR Doc. 96–16437 Filed 6–26–96; 8:45 am]

BILLING CODE 3710–08–M

DEPARTMENT OF THE ARMY

Patent Licenses, Exclusive; Electrochemical Capacitor

AGENCY: U.S. Army Research Laboratory.

ACTION: Notice of prospective exclusive license.

SUMMARY: In accordance with 37 CFR 404.7(a)(1)(i), announcement is made of prospective exclusive licenses for Electrochemical Capacitor technology, as described in U.S. Patent Application Serial No. 08/353, 418, filed December 9, 1994, entitled, ''Amorphous Thin Film Electrode Materials from Hydrous Metal Oxides,'' and the related applications listed therein.

FOR FURTHER INFORMATION CONTACT: Mr. William H. Anderson, U.S. Army, Communications-Electronics Command, ATTN: AMSEL–LG–L, Fort Monmouth, New Jersey 07703–5010, Telephone (908) 532–4112, E–mail anderson@doim6.monmouth.army.mil.

SUPPLEMENTARY INFORMATION: U.S. Patent Application Serial No. 08/353,418, filed December 9, 1994, entitled, ''Amorphous Thin Film Electrode Materials from Hydrous Metal Oxides,'' and the related applications listed therein were assigned to the United States of America, as represented by the Secretary of the Army. Accordingly, under the authority of section 11(a)(2) of the Federal Technology Transfer Act of 1986 (Pub. L. 99–502) and section 207 of Title 35, United States Code, the Department of the Army, as represented by the Army Research Laboratory, intends to grant exclusive licenses for the above identified U.S. Patent Applications to Kim Technologies International, 13535 South Figueroa Street, Los Angeles, California 90061.

These applications concern electrochemical capacitor technology involving the preparation of electrode materials and the assembly of other components together to provide energy with a power higher than that of batteries.

A notice of the availability of this technology for licensing was published in the Federal Register, Vol. 61, No. 92, at page 21445, May 10, 1996.

Pursuant to 37 CFR 404.7(a)(1)(i) any interested party may file written objections to this prospective exclusive license agreements. Written objections should be directed to:

Mr. William H. Anderson, Intellectual Property Law Division, U.S. Army Communications-Electronics Command, ATTN: AMSEL–LG–L, Fort Monmouth, New Jersey 07703–5010

Written objections must be filed within sixty (60) days from the date of the publication of this notice in the Federal Register.

Gregory D. Showalter,

Army Federal Register Liaison Officer.

[FR Doc. 96–16438 Filed 6–26–96; 8:45 am]

BILLING CODE 3710–08–M

Department of the Navy

Notice of Government-Owned Inventions; Availability for Licensing

SUMMARY: The inventions listed below are assigned to the United States Government as represented by the Secretary of the Navy and are made available for licensing by the Department of the Navy.

Copies of patents cited are available from the Commissioner of Patents and Trademarks, Washington, D.C. 20231, for $3.00 each. Requests for copies of patents must include the patent number.

Copies of patent applications cited are available from the National Technical Information Service (NTIS), Springfield, Virginia 22161 for $6.95 each ($10.95 outside North American Continent). Requests for copies of patent applications must include the patent application serial number. Claims are deleted from the copies of patent applications sold to avoid premature disclosure.

Patent 5,343,742: FLOATING PLATFORM TOW POST; filed 28 September 1993; patented 6 September 1994.// Patent 5,388,926: COMPOSITE COUPLING FOR TOWED ARRAYS; filed 22 February 1993; patented 14 February 1995.// Patent 5,437,190: METHOD FOR DETERMINING THE EFFECTS OF STRESS; filed 29 May 1991; patented 1 August 1995.// Patent 5,445,040: CAGING SYSTEM; filed 20 May 1994; patented 29 August 1995.// Patent 5,454,048: APPARATUS FOR MULTIPLEXED IMAGING USING OPTICALLY-GENERATED KRONECKER PRODUCTS; filed 6 November 1992; patented 26 September 1995.// Patent 5,456,122: CABLE LOAD TRANSDUCER; filed 13 October 1994; patented 10 October 1995.// Patent 5,456,200: RUDDER FOR REDUCED CAVITATION; filed 21 April 1995; patented 10 October 1995.// Patent 5,456,207: SYNTHESIS OF TRIISOPROPYLINDIUM. DIISOPROPYLTELLURIDE ADDUCT AND USE FOR SEMICONDUCTOR MATERIALS; filed 16 May 1994; patented 10 October 1995.// Patent 5,456,427: AIR-LAUNCHABLE GLIDING SONOBUOY; filed 25 July 1994; patented 10 October 1995.// Patent 5,457,688: SIGNAL PROCESSOR HAVING MULTIPLE PARALLELED DATA ACQUISITION CHANNELS AND AN ARBITRATION UNIT FOR EXTRACTING FORMATTED DATA THEREFROM FOR TRANSMISSION; filed 7 May 1993; patented 10 October 1995.// Patent 5,457,702: CHECK BIT CODE CIRCUIT FOR SIMULTANEOUS SINGLE BIT ERROR CORRECTION AND BURST ERROR DETECTION; filed 5 November 1993; patented 10 October 1995.// Patent 5,458,149: MULTI-STAGE FLUID FLOW CONTROL DEVICE; filed 30 June 1994; patented 17 October 1995.// Patent 5,458,770: OIL/COOLANT SEPARATOR; filed 31 March 1994; patented 17 October 1995.// Patent 5,459,321: LASER HARDENED BACKSIDE ILLUMINATED OPTICAL DETECTOR; filed 26 December 1990; patented 17 October 1995.// Patent 5,461,926: SINGLE-ENDED OPTICAL FIBER STRAIN SENSOR FOR MEASURING MAXIMUM STRAIN; filed 30 June 1994; patented 31 October 1995.// Patent 5,461,927: OPTICAL FIBER STRAIN SENSOR FOR MEASURING MAXIMUM STRAIN; filed 30 June 1994; patented 31 October 1995.// Patent 5,462,000: NON-TURBULENT PULL DOWN EYE FOR BUOYANT TEST VEHICLE; filed 21 December 1994; patented 31 October 1995.// Patent 5,463,334: ARBITRARY WAVEFORM GENERATOR; filed 2 February 1995; patented 31 October 1995.// Patent 5,463,396: ECM FOR LONG-RANGE RADARS; filed 16 April 1980; patented 31 October 1995.// Patent 5,463,399: MTI USING A POLYPHASE CODE; filed 28 January 1983; patented 31 October 1995.// Patent 5,464,161: SOLID WASTE PULPER; filed 30 September 1994; patented 7 November 1995.// Patent 5,464,321: MARINE PROPELLER; filed 24 November 1978; patented 7 November 1995.// Patent 5,466,537: INTERMETALLIC THERMAL SENSOR; filed 12 April 1993; patented 14 November 1995.// Patent 5,468,674: METHOD FOR FORMING LOW AND HIGH MINORITY CARRIER LIFETIME LAYERS IN A SINGLE SEMICONDUCTOR STRUCTURE; filed 8 June 1994; patented 21 November 1995.// Patent 5,468,913: ELECTRO-OPTICAL COAXIAL TOW CABLE; filed 9 February 1995; patented 21 November 1995.// Patent 5,469,374: AUTOMATIC DATA SEGMENTATION MODULE FOR TARGET MOTION ANALYSIS APPLICATIONS; filed 23 June 1993; patented 21 November 1995.// Patent 5,470,232: RECONFIGURABLE

AIRCRAFT STICK CONTROL AND METHOD FOR CONNECTING AND REMOVING STICK CONTROL FROM AIRCRAFT SIMULATOR; filed 29 September 1993; patented 28 November 1995.// Patent 5,471,182: BROADBAND PRESSURE BARRIER FOR CIRCULAR WAVEGUIDE; filed 8 August 1994; patented 28 November 1995.// Patent 5,471,433: SYSTEM AND METHOD FOR RAPIDLY TRACKING HIGHLY DYNAMIC VEHICLES; filed 18 October 1994; patented 28 November 1995.// Patent 5,471,434: SYSTEM AND METHOD FOR RAPIDLY TRACKING VEHICLES OF SPECIAL UTILITY IN LOW SIGNAL-TO-NOISE ENVIRONMENTS; filed 18 October 1994; patented 28 November 1995.// Patent 5,471,634: NETWORK FILE SERVER WITH AUTOMATIC SENSING MEANS; filed 29 March 1994; patented 28 November 1995.// Patent 5,472,069: VIBRATION DAMPING DEVICE; filed 27 October 1993; patented 5 December 1995.// Patent 5,472,112: QUICK-POUR CONTAINER; filed 31 October 1994; patented 5 December 1995.// Patent 5,472,519: CONDUCTING POLYMER THERMOELECTRIC MATERIAL AND PROCESS OF MAKING SAME; filed 30 May 1995; patented 5 December 1995.// Patent 5,472,742: METHOD FOR ACTIVATING CARBON FIBER SURFACES; filed 28 September 1994; patented 5 December 1995.// Patent 5,472,787: ANTI-REFLECTION AND ANTI-OXIDATION COATINGS FOR DIAMOND; filed 11 August 1992; patented 5 December 1995.// Patent 5,472,807: ALUMINUM-FERRICYANIDE BATTERY; filed 30 November 1993; patented 5 December 1995.// Patent 5,473,116: QUICK CHANGE ANTI-CORONA CONNECTOR; filed 31 March 1994; patented 5 December 1995.// Patent 5,473,340: APPARATUS FOR DISPLAYING A MULTI-COLOR PATTERN; filed 27 September 1990; patented 5 December 1995.// Patent 5,473,472: NIGHT VISION GOGGLE FOCUSING AID; filed 14 February 1994; patented 5 December 1995.// Patent 5,473,578: SONAR AND CALIBRATION UTILIZING NON-LINEAR ACOUSTIC RERADIATION; filed 14 March 1994; patented 5 December 1995.// Patent 5,473,718: FIBER OPTIC LOOSE TUBE BUFFER TO FAN-OUT TUBE ADAPTER SYSTEM; filed 20 September 1994; patented 5 December 1995.// Patent 5,473,728: TRAINING OF HOMOSCEDASTIC HIDDEN MARKOV MODELS FOR AUTOMATIC SPEECH RECOGNITION; filed 24 February 1993; patented 5 December 1995.// Patent 5,473,952: BENTHIC FLUX SAMPLING DEVICE; filed 22 March 1994; patented 12 December 1995.// Patent 5,474,454: OWN SHIP SENSOR SYSTEM SIMULATOR; filed 10 February 1994; patented 12 December 1995.// Patent 5,474,499: FLEXIBLE DRIVE SHAFT COUPLING; filed 12 July 1993; patented 12 December 1995.// Patent 5,474,632: METHOD OF MAKING A LATTICE CORE SANDWICH CONSTRUCTION; filed 19 July 1994; patented 12 December 1995.// Patent 5,475,651: METHOD FOR REAL-TIME EXTRACTION OF OCEAN BOTTOM PROPERTIES; filed 18 October 1994; patented 12 December 1995.// Patent 5,475,802: SELECTIVE POLYGON MAP DISPLAY METHOD; filed 12 May 1994; patented 12 December 1995.// Patent 5,476,239: GYRO PLATFORM ASSEMBLY WITH A SPINNING VEHICLE; filed 19 April 1994; patented 19 December 1995.// Patent 5,476,401: COMPACT WATER JET PROPULSION SYSTEM FOR A MARINE VEHICLE; filed 30 September 1994; patented 19 December 1995.// Patent 5,476,552: SURFACE PREPARATION FOR BONDING TITANIUM; filed 25 January 1995; patented 19 December 1995.// Patent 5,477,504: BALANCED, DOUBLE-SIDED CALIBRATION CIRCUIT FOR SENSOR ELEMENT AND DIFFERENTIAL PREAMPLIFIER; filed 7 October 1994; patented 19 December 1995.// Patent 5,477,544: MULTI-PORT TESTER INTERFACE; filed 10 February 1994; patented 19 December 1995.// Patent 5,477,733: PROJECTILE RECOVERY DEVICE; filed 9 February 1995; patented 26 December 1995.// Patent 5,477,803: TORPEDO TUBE AND SLIDE VALVE GRATES; filed 30 June 1994; patented 26 December 1995.// Patent 5,478,058: SHOCK ISOLATION METHOD AND APPARATUS; filed 2 May 1994; patented 26 December 1995.// Patent 5,481,505: TRACKING SYSTEM AND METHOD; filed 15 May 1995; patented 2 January 1996.// Patent 5,483,839: MULTI-PITOT TUBE ASSEMBLY; filed 8 December 1994; patented 16 January 1996.// Patent 5,484,027: ICE PENETRATING HOT POINT; filed 1 July 1987; patented 16 January 1996.// Patent 5,485,392; MANUAL SOLDERING PROCESS MONITORING SYSTEM; filed 12 September 1994; patented 16 January 1996.// Patent 5,485,834: MANUALLY TUNABLE, CLOSED-CIRCUIT UNDER-WATER BREATHING APPARATUS; filed 10 August 1994; patented 23 January 1996.// Patent 5,487,351: CONTROL SURFACE FOR UNDERWATER VEHICLE; filed 13 January 1995; patented 30 January 1996.// Patent 5,488,336: BROADBAND WAVEGUIDE PRESSURE WINDOW; filed 8 August 1994; patented 30 January 1996.// Patent 5,488,589: NEURAL NETWORK BASED THREE DIMENSIONAL OCEAN MODELER; filed 18 October 1994; patented 30 January 1996.// Patent application 08/003,999: TIME GRATED IMAGING THROUGH SCATTERING MATERIAL USING POLARIZATION AND STIMULATED RAMAN AMPLIFICATION; filed 15 January 1993.// Patent application 08/303,809: MAPPED MEMORY INTERFACE FOR COMMUNICATIONS BETWEEN MULTIPLE COMPUTERS; filed 9 September 1994.// Patent application 08/304,960: REACTIVE OXYGEN-ASSISTED ION IMPLANTATION INTO METALS AND PRODUCTS MADE THEREFROM; filed 13 September 1994.// Patent application 08/353,853: CONTACT MANAGEMENT MODEL ASSESSMENT SYSTEM FOR CONTACT TRACKING IN THE PRESENCE OF MODEL UNCERTAINTY AND NOISE; filed 9 December 1994.// Patent application 08/368,821: CONTINUOUSLY TUNABLE UV Ce: LISAF SOLID STATE LASER; filed 5 January 1995.// Patent application 08/374,474: LOWER BANDGAP, LOWER RESISTIVITY, SILICON CARBIDE HETEROEPITAXIAL MATERIAL, AND METHOD BY MAKING SAME; filed 17 January 1995.// Patent application 08/379,380: LIGHTWEIGHT ZINC ELECTRODE; filed 26 January 1995.// Patent application 08/381,243: OPTICALLY PUMPED, PRASEODYMIUM BASED SOLID STATE LASER; filed 31 January 1995.// Patent application 08/382,306: FLIPPER ENERGY SOURCE; filed 25 January 1995.// Patent application 08/391,971: ANNULAR GMR-BASED MEMORY ELEMENT; filed 21 February 1995.// Patent application 08/395,321: HIGH RESOLUTION ENCODING CIRCUIT AND PROCESS FOR ANALOG TO DIGITAL CONVERSION; filed 28 February 1995.// Patent application 08/396,292: ALKALINE EARTH MODIFIED GERMANIUM SULFIDE GLASS; filed 28 February 1995.// Patent application 08/396,950: VARIABLE RESISTANCE, LIQUID-COOLED LOAD BANK; filed 1 March 1995.// Patent application 08/398,848: HIGH TEMPERATURE COPOLYMERS FROM INORGANIC-ORGANIC HYBRID POLYMERS AND MULTI-ETHYNYLBENZENES; filed 3 March 1995.// Patent application 08/402,783: USE OF LIPID LIPOSOMES AS CARRIERS FOR DELIVERY OF ORAL VACCINES; filed 13 March 1995.// Patent application 08/414,824: COMMUNICATIONS SYSTEM USING

A SHARPLY BANDLIMITED KEYING WAVEFORM; filed 31 March 1995.// Patent application 08/414,885: MILLING MACHINE EXTENSION; filed 31 March 1995.// Patent application 08/416,113: SELECTIVE VAPOR DEPOSITION USING FILMS CROSS-REFERENCE TO RELATED APPLICATION; filed 4 April 1995.// Patent application 08/420,536: INDUCTIVE DETECTOR FOR TIME-OF-FLIGHT MASS SPECTROMETERS; filed 12 April 1995.// Patent application 08/422,102: SIDEWALL PASSIVATION BY OXIDATION DURING REFRACTORY-METAL PLASMA ETCHING; filed 14 April 1995.// Patent application 08/422,103: RAPID ASSAY FOR DETECTION OF ENDOTOXINS CROSS REFERENCE TO RELATED APPLICATION; filed 14 April 1995.// Patent application 08/428,454: PHOTOACTIVATABLE POLYMERS FOR PRODUCING PATTERNED BIOMOLECULAR ASSEMBLIES; filed 25 April 1995.// Patent application 08/430,953: SOLID-STATE BLUE LASER SOURCE; filed 28 March 1995.// Patent application 08/430,956: HYBRID THERMAL-DEFOCUSING/NONLINEAR-SCATTERING BROADBAND OPTICAL LIMITER FOR THE PROTECTION OF EYES AND SENSORS; filed 28 April 1994.// Patent application 08/437,763: SILOXANE UNSATURATED HYDRO-CARBON BASED THERMOSETTING POLYMERS; filed 9 May 1995.// Patent application 08/443,912: SUBMARINE ANTENNA POSITIONING ASSEMBLY; filed 22 May 1995.// Patent application 08/449,474: ENHANCED ADAPTIVE STATISTICAL FILTER PROVIDING SPARSE DATA STOCHASTIC MENSURATION FOR RESIDUAL ERRORS TO IMPROVE PERFORMANCE FOR TARGET MOTION ANALYSIS NOISE DISCRIMINATION; filed 25 May 1995.// Patent application 08/449,475: ENHANCED ADAPTIVE STATISTICAL FILTER PROVIDING IMPROVED PERFORMANCE FOR TARGET MOTION ANALYSIS NOISE DISCRIMINATION; filed 25 May 1995.// Patent application 08/449,581: PACKAGE-INTERFACE THERMAL SWITCH; filed 24 May 1995.// Patent application 08/450,214: DEPLOYABLE HYDROPHONE; filed 25 May 1995.// Patent application 08/450,215: CONTINUOUSLY WRAPPED FIBER OPTIC TOWED ARRAY; filed 25 May 1995.// Patent application 08/454,982: PRODUCTION OF STRUCTURES BY ELECTROSTATICALLY-FOCUSED DEPOSITION; filed 31 May 1995.// Patent application 08/489,663: MULTIPLE, PARALLEL, SPATIAL PHASE MEASUREMENT; filed 12 June 1995.// Patent application 08/489,920: FERROELECTRIC AND ELECTRO-CLINIC LIQUID CRYSTAL MATERIALS WITH SUB-AMBIENT TEMPERATURE STABILITY, BROAD OPERATION RANGE, AND FAST DYNAMIC RESPONSE; filed 13 June 1995.

FOR FURTHER INFORMATION CONTACT: Mr. R.J. Erickson, Staff Patent Attorney, Office of Naval Research (Code OOCC), Arlington, Virginia 22217–5660, Telephone (703) 696–4001.

Dated: June 19, 1966.

M.A. Waters,

LCDR, JAGC, USN, Federal Register Liaison Officer.

[FR Doc. 96–16439 Filed 6–26–96; 8:45 am]

BILLING CODE 3810–FF–P

DEPARTMENT OF ENERGY

Federal Energy Regulatory Commission

[Docket No. RP96–280–000]

Tuscarora Gas Transmission Company; Notice of Proposed Changes in FERC Gas Tariff

June 20, 1996.

Take notice that on June 18, 1996, Tuscarora Gas Transmission Company (Tuscarora) tendered for filing as part of its FERC Gas Tariff, Original Volume No. 1, the following tariff sheets, to become effective August 1, 1996:

First Revised Sheet Nos. 4 & 5
First Revised Sheet No. 31
Original Sheet Nos. 91–93.

Tuscarora states that the tariff sheets which it is submitting reflect a Gas Research Institute Adjustment Provision.

Tuscarora further states it has served a copy of this filing upon all interested state regulatory agencies and Tuscarora's jurisdictional customers.

Any person desiring to be heard or protest said filing should file a motion to intervene or protest with the Federal Energy Regulatory Commission, 888 First Street, N.E., Washington, D.C. 20426, in accordance with Sections 385.214 and 385.211 of the Commission's Rules of Practice and Procedure. All such motions or protests must be filed as provided in Section 154.210 of the Commission's Regulations. Protests will be considered by the Commission in determining the appropriate action to be taken, but will not serve to make protestants parties to the proceeding. Any person wishing to become party must file a motion to intervene. Copies of this filing are on file with the Commission and are available for public inspection in the Public Reference Room.

Lois D. Cashell,

Secretary.

[FR Doc. 96–16352 Filed 6–26–96; 8:45 am]

BILLING CODE 6717–01–M

Federal Energy Regulation Commission

[Docket No. RP95–296–003]

Williams Natural Gas Company; Notice of Proposed Changes in FERC Gas Tariff

June 20, 1996.

Take notice that on June 17, 1996, Williams Natural Gas Company (WNG), tendered for filing to become part of its FERC Gas Tariff, Second Revised Volume No. 1, the following tariff sheets, with the proposed effective date of March 14, 1996:

Substitute Second Revised Sheet No. 251
Substitute Third Revised Sheet No. 252
Second Substitute First Revised Sheet No. 253
Substitute First Revised Sheet No. 254

WNG states that this filing is being made in compliance with Commission order issued May 17, 1996, in Docket No. RP95–296–002. WNG was directed to revise its tariff to incorporate the following modifications: (1) posting the availability of the PDM gas at least 21 days prior to the beginning of the month, (2) posting on the EBB to be held open until two business days prior to the date beginning-of-the-month nominations are due (four business days prior to the first day of each month), (3) posting on the EBB the amount of the winning bid, the name of the winning bidder, and an indication of whether the winning bidder is an affiliate, (4) for a six-month period, prohibiting bids on PDM volumes for periods longer than one month, and (5) posting on the EBB 12 months of the production history for the applicable PDM gas packages.

WNG states that a copy of its filing was served on all participants listed on the service lists maintained by the Commission in the dockets referenced above and on all jurisdictional customers and interested state commissions.

Any person desiring to protest this filing should file a protest with the Federal Energy Regulation Commission, 888 First Street, NE, Washington, DC 20426, in accordance with Section 385.211 of the Commission's Rules and Regulations. All such protests must be filed as provided in Section 154.210 of the Commission's Regulations. Protests will be considered by the Commission in determining the appropriate action to

be taken, but will not serve to make protestants parties to the proceedings. Copies of this filing are on file with the Commission and are available for public inspection in the Public Reference Room.

Lois D. Cashell,

Secretary.

[FR Doc. 96–16351 Filed 2–26–96; 8:45 am]

BILLING CODE 6717–01–M

Federal Energy Regulatory Commission

[Docket No. EG96–75–000, et al.]

Coastal Suzhou Power Ltd., et al. Electric Rate and Corporate Regulation Filings

June 19, 1996.

Take notice that the following filings have been made with the Commission:

1. Coastal Suzhou Power Ltd.

[Docket No. EG96–75–000]

On June 12, 1996, Coastal Suzhou Power, Ltd. (''Applicant''), West Wind Building, P.O. Box 1111, Grand Cayman, Cayman Islands, B.W.I., filed with the Federal Energy Regulatory Commission an application for determination of exempt wholesale generator status pursuant to Part 365 of the Commission's Regulations.

Applicant, a Cayman Islands Corporation intends to have an ownership interest in certain generating facilities in China. These facilities will consist of a 76 MW (net) electric generating facility located in Suzhou City, Jiangsu Province, China including two diesel-fired gas turbine units and related interconnection facilities.

Comment date: July 8, 1996, in accordance with Standard Paragraph E at the end of this notice. The Commission will limit its consideration of comments to those that concern the adequacy or accuracy of the application.

2. Southern California Edison Company

[Docket Nos. ER87–483–007 and FA85–67–007]

Take notice that on June 12, 1996, Southern California Edison Company tendered for filing its refund report in the above-referenced dockets.

Comment date: July 3, 1996, in accordance with Standard Paragraph E at the end of this notice.

3. Cenerprise, Inc.

[Docket No. ER94–1402–008]

Take notice that on June 11, 1996, Cenerprise, Inc. tendered for filing a Notice of Succession stating that Cenergy, Inc. has changed its name to Centerprise, Inc., and is adopting Cenergy's tariff currently on file with the Commission, under Rate Schedule FERC No. 1.

Comment date: July 3, 1996, in accordance with Standard Paragraph E at the end of this notice.

4. Northern Indiana Public Services Company

[Docket No. ER96–1426–001]

Take notice that on June 12, 1996, Northern Indiana Public Services Company (Northern) filed its Compliance Rate Schedule, providing for wholesale sales of power and energy by Northern to eligible purchasers at agreed-upon rates and filed its Standards of Conduct in compliance with the Commission's Order dated May 29, 1996.

Copies of this filing have been sent to all parties and to the Indiana Utility Regulatory Commission and the Indiana Office of Utility Consumer Counselor.

Comment date: July 3, 1996, in accordance with Standard Paragraph E at the end of this notice.

5. NIPSCO Energy Services, Inc.

[Docket No. ER96–1431–001]

Take notice that on June 12, 1996, NIPSCO Energy Services, Inc. (NESI) filed its Compliance Rate Schedule, providing for wholesale sales of power and energy by NESI to eligible purchasers at agreed-upon rates and filed its Standards of Conduct in compliance with the Commission's Order dated May 29, 1996.

Copies of this filing have been sent to all parties and to the Indiana Utility Regulatory Commission and the Indiana Office of Utility Consumer Counselor.

Comment date: July 3, 1996, in accordance with Standard Paragraph E at the end of this notice.

6. Houston Lighting & Power Company

[Docket No. ER96–1762–000]

Take notice that on June 13, 1996, Houston Lighting & Power Company tendered for filing an amendment to its filing in this docket.

Copies of the filing were served on the affected customer and the Public Utility Commission of Texas.

Comment date: July 3, 1996, in accordance with Standard Paragraph E at the end of this notice.

7. Southern Company Services, Inc.

[Docket No. ER96–2025–000]

Take notice that on June 4, 1996, Southern Company Services, Inc. (''SCS''), acting on behalf of Alabama Power Company, Georgia Power Company, Gulf Power Company, Mississippi Power Company, and Savannah Electric and Power Company (collectively referred to as ''Southern Companies'') filed two (2) service agreements between SCS, as agent of the Southern Companies, and (i) PECO Energy Company and (ii) Calpine Power Services Company for non-firm transmission service under the Point-to-Point Transmission Service Tariff of Southern Companies.

Comment date: July 3, 1996, in accordance with Standard Paragraph E at the end of this notice.

8. Northern Indiana Public Service Company

[Docket No. ER96–2085–000]

Take notice that on June 7, 1996, Northern Indiana Public Service Company, tendered for filing an executed Standard Transmission Service Agreement between Northern Indiana Public Service Company and Enron Power Marketing, Inc.

Under the Transmission Service Agreement, Northern Indiana Public Company will provide Point-to-Point Transmission Service to Enron Power Marketing, Inc. pursuant to the Transmission Service Tariff filed by Northern Indiana Public Service Company in Docket No. ER96–1426–000 and allowed to become effective by the Commission. *Northern Indiana Public Service Company*, 75 FERC ¶61,213 (1996). Northern Indiana Public Service Company has requested that the Service Agreement be allowed to become effective as of July 1, 1996.

Copies of this filing have been sent to the Indiana Utility Regulatory Commission and the Indiana Office of Utility Consumer Counselor.

Comment date: July 3, 1996, in accordance with Standard Paragraph E at the end of this notice.

9. Tampa Electric Company

[Docket No. ER96–2086–000]

Take notice that on June 7, 1996, Tampa Electric Company (Tampa Electric) tendered for filing three agreements with the Orlando Utilities Commission (OUC): (1) an Operating Agreement with Respect to Interconnection at Lake Agnes Switching Station; (2) a Participation, Operation and Maintenance Agreement for Segment of 230 Kv Taft-McIntosh Transmission Line; and (3) a Participation, Operation and Maintenance Agreement for Osceola Substation and 69 Kv Transmission Line to RCID Studio Substation. Tampa Electric also tendered for filing one agreement with Reedy Creek Improvement District (RCID): an

Operating Agreement With Respect to Interconnection at Studio Substation.

Tampa Electric requests waiver of the Commission's notice requirement to permit the agreements to be made effective on less than 60 days' notice.

Tampa Electric states that a copy of the filing has been served on OUC, RCID, and the Florida Public Service Commission.

Comment date: July 3, 1996, in accordance with Standard Paragraph E at the end of this notice.

10. Louisville Gas and Electric Company

[Docket No. ER96–2087–000]

Take notice that on June 10, 1996, Louisville Gas and Electric Company tendered for filing a copy of a Non-Firm Transmission Service Agreement between Louisville Gas and Electric Company and AIG Trading Corporation under Rate TS.

Comment date: July 3, 1996, in accordance with Standard Paragraph E at the end of this notice.

11. Louisville Gas and Electric Company

[Docket No. ER96–2088–000]

Take notice that on June 10, 1996, Louisville Gas and Electric Company tendered for filing a copy of a Non-Firm Transmission Service Agreement between Louisville Gas and Electric Company and Western Power Services, Inc. under Rate TS.

Comment date: July 3, 1996, in accordance with Standard Paragraph E at the end of this notice.

12. Louisville Gas and Electric Company

[Docket No. ER96–2089–000]

Take notice that on June 10, 1996, Louisville Gas and Electric Company tendered for filing a copy of a Non-Firm Transmission Service Agreement between Louisville Gas and Electric Company and Tennessee Power Company under Rate TS.

Comment date: July 3, 1996, in accordance with Standard Paragraph E at the end of this notice.

13. Louisville Gas and Electric Company

[Docket No. ER96–2090–000]

Take notice that on June 10, 1996, Louisville Gas and Electric Company tendered for filing a copy of a Non-Firm Transmission Service Agreement between Louisville Gas and Electric Company and Southern Energy Marketing, Inc. under Rate TS.

Comment date: July 3, 1996, in accordance with Standard Paragraph E at the end of this notice.

14. Louisville Gas and Electric Company

[Docket No. ER96–2091–000]

Take notice that on June 10, 1996, Louisville Gas and Electric Company tendered for filing a copy of a Non-Firm Transmission Service Agreement between Louisville Gas and Electric Company and South Carolina Public Service Authority under Rate TS.

Comment date: July 3, 1996, in accordance with Standard Paragraph E at the end of this notice.

15. Southern Company Services, Inc.

[Docket No. ER96–2092–000]

Take notice that on June 10, 1996, Southern Company Services, Inc., acting on behalf of Alabama Power Company, Georgia Power Company, Mississippi Power Company and Savannah Electric and Power Company (Southern Companies), tendered for filing an Interchange Service Contract between Southern Companies and Stand Energy Corporation. The interchange Service Contract establishes the terms and conditions of power supply, including provisions relating to service conditions, control of system disturbances, metering and other matters related to the administration of the agreement.

Comment date: July 3, 1996, in accordance with Standard Paragraph E at the end of this notice.

16. Central Hudson Gas and Electric Corporation

[Docket No. ER96–2093–000]

Take notice that Central Hudson Gas and Electric Corporation (CHG&E), on June 10, 1996, tendered for filing a Service Agreement between CHG&E and AIG Trading Corporation. The terms and conditions of service under this Agreement are made pursuant to CHG&E's FERC Electric Rate Schedule, Original Volume No. 1 (Power Sales Tariff) accepted by the Commission in Docket No. ER94–1662. CHG&E also has requested waiver of the 60-day notice provision pursuant to 18 CFR 35.11.

A copy of this filing has been served on the Public Service Commission of the State of New York.

Comment date: July 3, 1996, in accordance with Standard Paragraph E at the end of this notice.

17. Central Hudson Gas and Electric Corporation

[Docket No. ER96–2094–000]

Take notice that Central Hudson Gas and Electric Corporation (CHG&E), on June 10, 1996, tendered for filing a Service Agreement between CHG&E and TransCanada Power Corporation. The terms and conditions of service under this Agreement are made pursuant to CHG&E's FERC Electric Rate Schedule, Original Volume No. 1 (Power Sales Tariff) accepted by the Commission in Docket No. ER94–1662. CHG&E also has requested waiver of the 60-day notice provision pursuant to 18 CFR 35.11.

A copy of this filing has been served on the Public Service Commission of the State of New York.

Comment date: July 3, 1996, in accordance with Standard Paragraph E at the end of this notice.

18. Southern Company Services, Inc.

[Docket No. ER96–2095–000]

Take notice that on June 10, 1996, Southern Company Services, Inc., acting on behalf of Alabama Power Company, Georgia Power Company, Gulf Power Company, Mississippi Power Company and Savannah Electric and Power Company (Southern Companies), tendered for filing an Interchange Service contract between Southern Companies and Electric Clearinghouse, Inc. The Interchange Service Contract establishes the terms and conditions of power supply, including provisions relating to service conditions, control of system disturbances, metering and other matters related to the administration of the agreement.

Comment date: July 3, 1996, in accordance with Standard Paragraph E at the end of this notice.

19. Arizona Public Service Company

[Docket No. ER96–2096–000]

Take notice that on June 10, 1996, Arizona Public Service Company tendered for filing a Service Agreement under APS–FERC Electric Tariff original Volume No. 1 (APS Tariff) with the following entity: City of Glendale.

A copy of this filing has been served on the above-listed party and the Arizona Corporation Commission.

Comment date: July 3, 1996, in accordance with Standard Paragraph E at the end of this notice.

20. Madison Gas and Electric Company

[Docket No. ER96–2097–000]

Take notice that on June 10, 1996, Madison Gas and Electric Company (MGE) tendered for filing a service agreement with Western Power Services, Inc., and WPS Energy Services, Inc., under MGE's Power Sales Tariff. MGE requests an effective date of 60 days from the filing date.

Comment date: July 3, 1996, in accordance with Standard Paragraph E at the end of this notice.

21. Wisconsin Public Service Corporation

[Docket No. ER96–2098–000]

Take notice that on June 10, 1996, Wisconsin Public Service Corporation tendered for filing an executed service agreement with Sonat Power Marketing, Inc. under its CS–1 Coordination Sales Tariff.

Comment date: July 5, 1996, in accordance with Standard Paragraph E at the end of this notice.

22. Kansas City Power & Light Company

[Docket No. ER96–2099–000]

Take notice that on June 10, 1996, Kansas City Power & Light Company (KCPL) tendered for filing Amendatory Agreement No. 3 to the Municipal Participation Agreement between KCPL and the City of Garnett, Kansas, dated June 3, 1996, and associated Service Schedule. KCPL states that the Amendatory Agreement revises the Agreement pursuant to KCPL's Open Season.

KCPL requests waiver of the Commission's requirements.

Comment date: July 5, 1996, in accordance with Standard Paragraph E at the end of this notice.

23. Louisville Gas and Electric Company

[Docket No. ER96–2100–000]

Take notice that on June 10, 1996, Louisville Gas and Electric Company tendered for filing copies of service agreements between Louisville Gas and Electric Company and Enron Power Marketing, Inc. under Rate GSS.

24. DuPont Power Marketing Inc.

[Docket No. ER96–2101–000]

Take notice that on June 10, 1996, DuPont Power Marketing Inc. (DPMI) tendered for filing a letter from the Executive Committee of the Western Systems Power Pool (WSPP) indicating that DPMI had completed all the steps for pool membership. DPMI requests that the Commission amend the WSPP Agreement to include it as a member.

DPMI requests an effective date of June 10, 1996 for the proposed amendment. Accordingly DPMI requests waiver of the Commission's notice requirements for good cause shown.

Copies of the filing were served upon the WSPP Executive Committee.

Comment date: July 5, 1996, in accordance with Standard Paragraph E at the end of this notice.

25. American Electric Power Service Corporation

[Docket No. ER96–2102–000]

Take notice that on June 10, 1996, the American Electric Power Service Corporation (AEPSC) tendered for filing a service agreement, executed by AEPSC and Allegheny Power Service Corporation, under the AEP Companies' Point-to-Point Transmission Service Tariff.

The Point-to-Point Transmission Tariff has been designated AEPSC FERC Electric Tariff Second Revised Volume No. 1, effective September 7, 1993. AEPSC requests waiver of notice to permit the Service Agreement to be made effective for service billed on and after May 10, 1996.

A copy of the filing was served upon the Parties and the State Utility Regulatory Commission of Indiana, Kentucky, Michigan, Ohio, Tennessee, Virginia and West Virginia.

Comment date: July 5, 1996, in accordance with Standard Paragraph E at the end of this notice.

26. Wisconsin Electric Power Company

[Docket No. ER96–2103–000]

Take notice that Wisconsin Electric Power Company (Wisconsin Electric) on June 10, 1996, tendered for filing an Electric Service Agreement between itself and CNG Power Services Corporation (CNG). The Electric Service Agreement provides for service under Wisconsin Electric's Coordination Sales Tariff.

Wisconsin Electric requests an effective date of sixty days from this filing. Copies of the filing have been served on CNG, the Public Service Commission of Wisconsin and the Michigan Public Service Commission.

Comment date: July 5, 1996, in accordance with Standard Paragraph E at the end of this notice.

27. Charles Anthony Yamorone

[Docket No. ID–2967–000]

Take notice that on May 15, 1996, Charles Anthony Yamorone (Applicant) tendered for filing an application under Section 305(b) to hold the following positions:

Executive Vice President
Director
Libra Investments, Inc.
El Paso Electric Company

Comment date: July 3, 1996, in accordance with Standard Paragraph E at the end of this notice.

Standard Paragraph

E. Any person desiring to be heard or to protest said filing should file a motion to intervene or protest with the Federal Energy Regulatory Commission, 888 First Street, N.E., Washington, D.C. 20426, in accordance with Rules 211 and 214 of the Commission's Rules of Practice and Procedure (18 CFR 385.211 and 18 CFR 385.214). All such motions or protests should be filed on or before the comment date. Protests will be considered by the Commission in determining the appropriate action to be taken, but will not serve to make protestants parties to the proceeding. Any person wishing to become a party must file a motion to intervene. Copies of this filing are on file with the Commission and are available for public inspection.

Lois D. Cashell,

Secretary.

[FR Doc. 96–16400 Filed 6–26–96; 8:45 am]

BILLING CODE 6717–01–P

[Docket Nos. ER94–1362–004, et al.]

Texican Energy Ventures, Inc., et al., Electric Rate and Corporate Regulation Filings

June 20, 1996.

Take notice that the following filings have been made with the Commission:

1. Texican Energy Ventures, Inc.; Morgan Stanley Capital Group Inc.; Imprimis Corporation; Dupont Power Marketing, Inc.

[Docket Nos. ER94–1362–004; ER94–1384–001; ER94–1672–005; ER95–1441–005 (not consolidated)]

Take notice that the following informational filings have been made with the Commission and are on file and available for inspection and copying in the Commission's Public Reference Room:

On June 18, 1996, Texican Energy Ventures, Inc. filed certain information as required by the Commission's July 25, 1994, order in Docket No. ER94–1362–000.

On June 13, 1996, Morgan Stanley Capital Group Inc. filed certain information as required by the Commission's November 8, 1994, order in Docket No. ER94–1384–000.

On June 3, 1996, Imprimis Corporation filed certain information as required by the Commission's December 14, 1994, order in Docket No. ER94–1672–000.

On June 17, 1996, Dupont Power Marketing, Inc. filed certain information as required by the Commission's August 30, 1995, order in Docket No. ER95–1441–000.

2. TECO EnergySource, Inc.

[Docket No. ER96–1563–001]

Take notice that on June 14, 1996, TECO EnergySource, Inc. (EnergySource) submitted a compliance filing in accordance with the Commission's June 11, 1996, order in this proceeding. The compliance filing reflects changes to EnergySource's Rate Schedule No. 1 and its Code of Conduct as well as the Code of Conduct of Tampa Electric Company.

Comment date: July 5, 1996, in accordance with Standard Paragraph E at the end of this notice.

3. Progress Power Marketing, Inc.

[Docket No. ER96–1618–000]

Take notice that on June 17, 1996, Progress Marketing, Inc. tendered for filing an amendment to its April 22, 1996, application in this docket for waivers and blanket approvals under various regulations of the Commission, and an order approving its Rate Schedule No. 1 (April 22 Application). PNM intends to engage in electric power and energy transactions as a marketer and a broker and this amendment supplements the market power analysis contained in its April 22 Application. PPM is seeking approval for the April 22 Application as amended by July 12, 1996.

Comment date: July 5, 1996, in accordance with Standard Paragraph E at the end of this notice.

4. Atlantic City Electric Company

[Docket No. ER96–1661–000]

Take notice that on June 6, 1996, Atlantic City Electric Company tendered for filing an amendment in the above-referenced docket.

Comment date: July 5, 1996, in accordance with Standard Paragraph E at the end of this notice.

5. Louisville Gas and Electric Company

[Docket No. ER96–1850–000]

Take notice that Louisville Gas and Electric Company (LG&E), by letter dated June 11, 1996, tendered for filing an amendment to its filing in the above-referenced docket. The amendment is in response to a request from the Commission for sales information related to the PSS agreement between LG&E and Commonwealth Edison Company.

A copy of the filing has been mailed to the Kentucky Public Service Commission.

Comment date: July 5, 1996, in accordance with Standard Paragraph E at the end of this notice.

6. Wisconsin Electric Power Company

[Docket No. ER96–2104–000]

Take notice that Wisconsin Electric Power Company (Wisconsin Electric) on June 10, 1996, tendered for filing an Electric Service Agreement between itself and Illinova Power Marketing, Inc. (Illinova). The Electric Service Agreement provides for service under Wisconsin Electric's Coordination Sales Tariff. The Transmission Service Agreement allows Illinova to receive transmission service under Wisconsin Electric's FERC Electric Tariff, Original Volume No. 5, Rate Schedule STNF, under Docket No. ER95–1474.

Wisconsin Electric requests an effective date of sixty days from the date of filing. Copies of the filing have been served on Illinova, the Public Service Commission of Wisconsin and the Michigan Public Service Commission.

Comment date: July 5, 1996, in accordance with Standard Paragraph E at the end of this notice.

7. Louisville Gas and Electric Company

[Docket No. ER96–2105–000]

Take notice that on June 10, 1996, Louisville Gas and Electric Company tendered for filing copies of a Purchase and Sales Agreement between Louisville Gas and Electric Company and KN Marketing, Inc. under Rate GSS.

Comment date: July 5, 1996, in accordance with Standard Paragraph E at the end of this notice.

8. Wisconsin Electric Power Company

[Docket No. ER96–2106–000]

Take notice that Wisconsin Electric Power Company (Wisconsin Electric) on June 10, 1996, tendered for filing revisions to its FERC Electric Tariff, Volume 1, Service Agreement No. 27 with the City of Oconto Falls (Oconto Falls).

Wisconsin Electric requests an effective date of May 15, 1996, in order to implement the Agreement's modifications, which do not result in revenue increases. Copies of the filing have been served on Oconto Falls and the Public Service Commission of Wisconsin.

Comment date: July 5, 1996, in accordance with Standard Paragraph E at the end of this notice.

9. Puget Sound Power & Light Company

[Docket No. ER96–2107–000]

Take notice that on June 11, 1996, Puget Sound Power & Light Company tendered for filing an agreement amending its wholesale for resale power contract with the Port of Seattle (Purchaser). A copy of the filing was served on Purchaser.

Puget states that the agreement changes the term of the wholesale for resale power contract.

Comment date: July 5, 1996, in accordance with Standard Paragraph E at the end of this notice.

10. Northern Indiana Public Service Company

[Docket No. ER96–2108–000]

Take notice that on June 11, 1996, Northern Indiana Public Service Company tendered for filing an executed Service Agreement between Northern Indiana Public Service Company and PECO Energy Company.

Under the Service Agreement, Northern Indiana Public Service Company agrees to provide services to PECO Energy Company under Northern Indiana Public Service Company's Power Sales Tariff, which was accepted for filing by the Commission and made effective by Order dated August 17, 1995 in Docket No. ER95–1222–000. Northern Indiana Public Service Company and PECO Energy Company request waiver of the Commission's sixty-day notice requirement to permit an effective date of June 15, 1996.

Copies of this filing have been sent to the Indiana Utility Regulatory Commission and the Indiana Office of Utility Consumer Counselor.

Comment date: July 5, 1996, in accordance with Standard Paragraph E at the end of this notice.

11. Commonwealth Electric Company

[Docket No. ER96–2109–000]

Take notice that on June 11, 1996, Commonwealth Electric Company tendered for filing an Interconnection Agreement with Nantucket Electric Company (Nantucket), an affiliate of New England Power Company (NEP), which governs the terms of the interconnection between Commonwealth and Nantucket for purposes of proposed transmission of power from NEP via Commonwealth to Nantucket.

Comment date: July 5, 1996, in accordance with Standard Paragraph E at the end of this notice.

12. Ohio Edison Company Pennsylvania Power Company

[Docket No. ER96–2110–000]

Take notice that on June 11, 1996, Ohio Edison Company tendered for filing on behalf of itself and Pennsylvania Power Company, an Agreement for Power Transactions with Carolina Power & Light Company. This initial rate schedule will enable the parties to purchase and sell capacity and energy in accordance with the terms of the Agreement.

Comment date: July 5, 1996, in accordance with Standard Paragraph E at the end of this notice.

13. The Dayton Power and Light Company

[Docket No. ER96–2111–000]

Take notice that The Dayton Power and Light Company (Dayton) tendered for filing on June 11, 1996, an executed Master Power Sales Agreement between Dayton and The Cleveland Electric Illuminating Company (CEI).

Pursuant to the rate schedules attached to Exhibit B to the Agreement, Dayton will provide to CEI power and/or energy for resale.

Comment date: July 5, 1996, in accordance with Standard Paragraph E at the end of this notice.

14. The Dayton Power and Light Company

[Docket No. ER96–2112–000]

Take notice that The Dayton Power and Light Company (Dayton) tendered for filing on June 11, 1996, an executed Master Power Sales Agreement between Dayton and Toledo Edison (Toledo).

Pursuant to the rate schedules attached as Exhibit B to the Agreement, Dayton will provide to Toledo power and/or energy for resale.

Comment date: July 5, 1996, in accordance with Standard Paragraph E at the end of this notice.

15. MidAmerican Energy Company

[Docket No. ER96–2113–000]

Take notice that on June 11, 1996, MidAmerican Energy Company (MidAmerican) tendered for filing a Service Agreement with WPS Energy Services, Inc. (WPS) dated June 6, 1996, entered into pursuant to MidAmerican's Rate Schedule for Power Sales, FERC Electric Tariff, Original Volume No. 5.

MidAmerican requests an effective date of June 6, 1996, for the Agreement with WPS, and accordingly seeks a waiver of the Commission's notice requirement. MidAmerican has served a copy of the filing on WPS, the Iowa Utilities Board, the Illinois Commerce Commission and the South Dakota Public Utility Commission.

Comment date: July 5, 1996, in accordance with Standard Paragraph E at the end of this notice.

16. New England Power Company

[Docket No. ER96–2114–000]

Take notice that on June 11, 1996, New England Power Company filed a Service Agreement and Certificate of Concurrence with Ashburnham Municipal Light Plant under NEP's FERC Electric Tariff, Original Volume No. 5.

Comment date: July 5, 1996, in accordance with Standard Paragraph E at the end of this notice.

17. Jersey Central Power & Light Company, Metropolitan Edison Company Pennsylvania Electric Company

[Docket No. ER96–2115–000]

Take notice that on June 11, 1996, GPU Service Corporation (GPU) on behalf of Jersey Central Power & Light Company, Metropolitan Edison Company and Pennsylvania Electric Company (jointly referred to as the ''GPU Companies''), filed a Service Agreement between GPU and TransCanada Power Corp. (TCPC) dated June 3, 1996. This Service Agreement specifies that TCPC has agreed to the rates, terms and conditions of the GPU Companies' Energy Transmission Service Tariff accepted by the Commission on September 28, 1995, in Docket No. ER95–791–000 and designated as FERC Electric Tariff, Original Volume No. 3.

GPU requests a waiver of the Commission's notice requirements for good cause shown and an effective date June 3, 1996, for the Service Agreement. GPU has served copies of the filing on regulatory agencies in New Jersey and Pennsylvania and on TCPC.

Comment date: July 5, 1996, in accordance with Standard Paragraph E at the end of this notice.

18. Florida Power & Light Company

[Docket No. ER96–2116–000]

Take notice that on June 11, 1996, Florida Power & Light Company (FPL) filed the Contract for Sales of Power and Energy by FPL to PECO Energy Company. FPL requests an effective date of June 17, 1996.

Comment date: July 5, 1996, in accordance with Standard Paragraph E at the end of this notice.

19. Cinergy Services, Inc.

[Docket No. ER96–2117–000]

Take notice that Cinergy Services, Inc. (Cinergy), on June 11, 1996, tendered for filing on behalf of its operating companies, The Cincinnati Gas & Electric Company (CG&E) and PSI Energy, Inc. (PSI), an Interchange Agreement dated May 1, 1996 between Cinergy, CG&E, PSI and Heath Petra Resources, Inc. (Heath).

The Interchange Agreement provides for the following service between Cinergy and Heath.

1. Exhibit A—Power Sales by Heath
2. Exhibit B—Power Sales by Cinergy

Cinergy and Heath have requested an effective date of June 17, 1996.

Copies of the filing were served on Heath Petra Resources, Inc. the Georgia Public Service Commission, the Kentucky Public Service Commission, the Public Utilities Commission of Ohio and the Indiana Utility Regulatory Commission.

Comment date: July 5, 1996, in accordance with Standard Paragraph E at the end of this notice.

20. Cinergy Services, Inc.

[Docket No. ER96–2118–000]

Take notice that Cinergy Services, Inc. (Cinergy), on June 11, 1996, tendered for filing on behalf of its operating companies, The Cincinnati Gas & Electric Company (CG&E) and PSI Energy, Inc. (PSI), an Interchange Agreement dated June 1, 1996, between Cinergy, CG&E, PSI and Heath Powertec International, LLP (Powertec).

The Interchange Agreement provides for the following service between Cinergy and Powertec.

1. Exhibit A—Power Sales by Powertec
2. Exhibit B—Power Sales by Cinergy

Cinergy and Powertec have requested an effective date of June 17, 1996.

Copies of the filing were served on Powertec International, LLP, the North Carolina Utilities Commission, the Kentucky Public Service Commission, the Public Utilities Commission of Ohio and the Indiana Utility Regulatory Commission.

Comment date: July 5, 1996, in accordance with Standard Paragraph E at the end of this notice.

21. Cinergy Services, Inc.

[Docket No. ER96–2119–000]

Take notice on June 11, 1996, Cinergy Services, Inc. (Cinergy) tendered for filing a service agreement under Cinergy's Non-Firm Point-to-Point Transmission Service Tariff (the Tariff) entered into between Cinergy and Eastex Power Marketing Inc.

Comment date: July 5, 1996, in accordance with Standard Paragraph E at the end of this notice.

22. Cinergy Services, Inc.

[Docket No. ER96–2120–000]

Take notice on June 11, 1996, Cinergy Services, Inc. (Cinergy) tendered for filing a service agreement under Cinergy's Non-Firm Power Sales Standard Tariff entered into between Cinergy and Atlantic City Electric Company.

Comment date: July 5, 1996, in accordance with Standard Paragraph E at the end of this notice.

23. PECO Energy Company

[Docket No. ER96–2121–000]

Take notice that on June 12, 1996, PECO Energy Company (PECO) filed a Service Agreement with TransCanada Power Corporation (TRANSCANADA) under PECO's FERC Electric Tariff, First Revised Volume No. 4. The Service Agreement adds TRANSCANADA as a customer under the Tariff.

PECO requests an effective date of June 5, 1996, for the Service Agreement.

PECO states that copies of this filing have been supplied to TRANSCANADA and to the Pennsylvania Public Utility Commission.

Comment date: July 5, 1996, in accordance with Standard Paragraph E at the end of this notice.

24. PECO Energy Company

[Docket No. ER96–2122–000]

Take notice that on June 12, 1996, PECO Energy Company (PECO) filed a Service Agreement with DuPont Power Marketing, Inc. (DUPONT) under PECO's FERC Electric Tariff Original Volume No. 1. The Service Agreement adds DUPONT as a customer under the Tariff.

PECO requests an effective date of June 4, 1996, for the Service Agreement.

PECO states that copies of this filing have been applied to DUPONT and to the Pennsylvania Public Utility Commission.

Comment date: July 5, 1996, in accordance with Standard Paragraph E at the end of this notice.

Standard Paragraph

E. Any person desiring to be heard or to protest said filing should file a motion to intervene or protest with the Federal Energy Regulatory Commission, 888 First Street, N.E., Washington, D.C. 20426, in accordance with Rules 211 and 214 of the Commission's Rules of Practice and Procedure (18 CFR 385.211 and 18 CFR 385.214). All such motions or protests should be filed on or before the comment date. Protests will be considered by the Commission in determining the appropriate action to be taken, but will not serve to make protestants parties to the proceeding. Any person wishing to become a party must file a motion to intervene. Copies of this filing are on file with the Commission and are available for public inspection.

Lois D. Cashell,

Secretary.

[FR Doc. 96–16399 Filed 6–26–96; 8:45 am]

BILLING CODE 6717–01–P

[Project Nos. 2525–004, 2595–005, 2522–002, 2546–001, 2560–001, and 2581–002]

Wisconsin Public Service Corp.; Notice of a Public Meeting in Crivitz, Wisconsin To Discuss Staff's Multiple-Project Draft Environmental Impact Statement (DEIS) for the Peshtigo River Hydroelectric Projects

June 21, 1996.

The staff of the Federal Energy Regulatory Commission (Commission) has prepared and issued a DEIS evaluating the environmental impacts that would result from relicensing the following six existing hydropower projects owned and operated by the Wisconsin Public Service Corporation on the Peshtigo River in Marinette County, Wisconsin: the Caldron Falls Project, No. 2525; the High Falls Project, No. 2595; the Johnson Falls Project, No. 2522; the Sandstone Rapids Project, No. 2546; the Potato Rapids Project, No. 2560; and the Peshtigo Project, No. 2581.

The subject DEIS describes and evaluates the site-specific and cumulative impacts of relicensing the six projects with the adoption of the following alternative actions: (1) continuing the terms of the original licenses (the non-action alternative); (2) mandating the applicant's proposed peaking operations, minimum flows, and recreational enhancements; (3) requiring the licensee to undertake the resource agencies' recommended year-round run-of-river operation, fish passage facilities, and land management measures; and (4) implementing staff's recommended seasonal run-of-river operation, minimum flows, fisheries enhancement plans, comprehensive land management plan, and additional public access facilities.

DEIS Meeting

The FERC staff will conduct one public meeting at which it will: (1) summarize the findings, conclusions, and recommendations of the subject DEIS; (2) respond to questions raised by meeting attendees; and (3) obtain public input on the DEIS provided by local residents, representatives of environmental organizations and Indian tribes, and technical personnel from state and federal resource agencies.

The meeting will be held from 7:00 P.M. until 10:30 P.M. on Thursday, August 1, 1996, in the Crivitz Town Hall, located at 800 Henrietta Avenue in Crivitz, Wisconsin, 54114.

Meeting Procedures

The meeting, which will be recorded by a stenographer, will become part of the formal record of the Commission's proceeding on the Peshtigo River projects. Individuals presenting statements at the meeting will be asked to sign in before the meeting starts and identify themselves for the record.

Concerned parties are encouraged to provide their opinions during the public meeting. Speaking time allowed for individuals will be determined before the meeting, based on the number of persons wishing to speak and the approximate amount of time available for the session, but all speakers will be permitted at least five minutes to present their views.

Written Comments

Interested persons also may: (1) submit written comments concerning the document to the stenographer at the DEIS meeting or (2) mail their comments to the Secretary of the Commission by the deadline date indicated in the Environmental Protection Agency's Federal Register notice regarding issuance of the Peshtigo River DEIS. All correspondence should be mailed to the following address: Lois Cashell, Secretary, Federal Energy Regulatory Commission, 888 First Street, N.E., Washington, DC 20426.

All filings sent to the Secretary of the Commission should contain an original and 8 copies. Failure to file an original and 8 copies may result in appropriate staff not receiving the benefit of your comments in a timely manner. See 18 CFR 4.34(h).

The top of the first page of all correspondence should indicate the FERC number and name of each project addressed by your comments.

Intervenors and interceders (as defined in 18 CFR 385.2010) who file documents with the Commission are reminded of the Commission's Rules of Practice and Procedure requiring them to serve a copy of all documents filed with the Commission on each person whose name is listed on the official Service list for this proceeding. See 18 CFR 4.34(b).

For further information, please contact Jim Haimes in Washington, DC at (202) 219–2780.

Lois D. Cashell,

Secretary.

[FR Doc. 96–16353 Filed 6–26 –96; 8:45 am]

BILLING CODE 6717–01–M

[Project Nos. 2669, et al.]

Hydroelectric Applications [New England Power Company, et al.]; Notice of Applications

Take notice that the following hydroelectric applications have been

filed with the Commission and are available for public inspection:

1 a. Type of Application: Amendment of License.

b. Project No.: 2669.

c. Date filed: October 6, 1994.

d. Applicant: New England Power Company.

e. Name of Project: Bear Swamp Project.

f. Location: on the Deerfield River in Franklin and Berkshire Counties, Massachusetts.

g. Filed Pursuant to: Federal Power Act 16 U.S.C. §§ 791(a)–825(r).

h. Applicant Contact: Mr. Mark E. Slade, New England Power Company, 25 Research Drive, Westborough, MA 01582, (508) 389–2859.

i. FERC Contact: Robert Bell (202) 219–2806.

j. Comment Date: July 26, 1996.

k. Status of Environmental Analysis: This Amendment is proposed to include in the license for the Bear Swamp Project No. 2669 certain conditions agreed to in the Offer of Settlement filed on October 6, 1994 in the license proceeding for the Deerfield River Project No. 2323 and discussed in the Draft Environmental Impact Statement for the Deerfield River Basin issued March 8, 1996.

l. In an offer of settlement filed on October 6, 1994 by New England Power Company in the license proceeding for the Deerfield River Project No. 2323, located on the Deerfield River in Franklin and Berkshire Counties, Massachusetts, New England Power Company proposed changes to the Bear Swamp Pumped Storage Project No. 2669. These proposed changes, which constitute a proposal to amend the terms of the Bear Swamp license, and which have been examined in the Draft Environmental Impact Statement for the Deerfield River Project, Bear Swamp Pumped Storage Project, and Gardners Falls Project Nos. 2323, 2669, and 2334 respectively, issued March 8, 1996, are as follows:

(1) Require the licensee to release from the Fife Brook dam into the Deerfield River a minimum flow of 125 cubic feet per second (cfs) as measured below the dam, for the protection and enhancement of fishery resources of the Deerfield River. The licensee shall release water from reservoir storage, if necessary, to ensure the minimum flow of 125 cfs is met.

(2) Require the licensee to implement the Comprehensive Recreation Plan filed with the Commission on September 30, 1993, as it applies to the Bear Swamp Pump Storage Project.

(3) Require the Licensee to annually release flows for whitewater boating from the Fife Brook dam on 50 weekend days and 56 weekdays from April 1 to October 31, according to the following monthly schedule:

Month	Allocation
April	3 weeks of Wednesday through Sunday releases.
May	2 weeks of Wednesday through Sunday releases, plus 2 weeks of Saturday and Sunday releases.
June	2 weeks of Wednesday through Sunday releases, plus 2 weeks of Saturday and Sunday releases.
July	3 weeks of Wednesday through Sunday releases, plus 1 week of Saturday and Sunday releases.
August	4 weeks of Thursday through Sunday releases.
September	3 weeks of Wednesday through Sunday releases.
October	3 weeks of Wednesday through Sunday releases.
Holidays	May be substituted for weekend days upon agreement before April 1 of each year.

The whitewater release of 700 cfs minimum flow should be provided for at least 3 continuous hours starting any time between the hours of 9:30 a.m. and 12:00 noon.

(4) Require the Licensee to grant to qualified government or nongovernment land management organizations, conservation easements to protect scenic, forestry, and natural resources on the 1,056 acres of land that is currently included in the Bear Swamp Pump Storage Project boundary and on 201 acres of land downriver of the Fife Brook dam that the Licensee shall add to the Bear Swamp Pump Storage Project boundary.

(5) Require the Licensee to implement a ''Programmatic Agreement'' among the Federal Energy Regulatory Commission, the Advisory Council on Historic Preservation, and the Massachusetts State Historic Preservation Officer, for managing historic properties that may be affected by an amendment of license.

M. This notice also consists of the following standard paragraphs: B, C, and D2.

2 a. Type of Application: New Major License.

b. Project No.: 11477–000.

c. Date filed: May 5, 1994.

d. Applicant: Northern California Power Agency.

e. Name of Project: Utica.

f. Location: On the North Fork Stanislaus River, Silver Creek, Mill Creek, and Angels Creek in Alpine, Calaveras, and Toulumne Counties, California. The project is partially within the Stanislaus National Forest.

g. Filed Pursuant to: Federal Power Act 16 USC §§ 791(a)–825(r).

h. Competing Application: Project No. 2019–017, filed May 3, 1994.

i. Applicant Contact: Hari Modi, Manager, Hydroelectric Project, Development, Regulatory Compliance and Licensing, Northern California Power Agency, 180 Cirby Way, Roseville, CA 95678, (916) 781–3636.

j. FERC Contact: Héctor M. Pérez at (202) 219–2843.

k. Deadline for interventions and protests: August 23, 1996.

l. Status of Environmental Analysis: This application is not ready for environmental analysis at this time—see attached paragraph E.

m. Description of Project: The existing project consists of: (1) three storage reservoirs (Lake Alpine, Union Reservoir, and Utica Reservoir) with a combined storage capacity of 9,581 acre-feet; (2) the Mill Creek Tap; (3) the 0.7-mile-long Upper Utica Conduit; (4) Hunters Reservoir with a usable storage capacity of 253 acre-feet; (5) the 13.4-mile-long Lower Utica Conduit; (6) Murphys Forebay; (7) a 4,048-foot-long penstock; (8) Murphys Powerhouse with an installed capacity of 3.6 MW; (9) Murphys Afterbay; and (10) other appurtenances.

The applicant proposes to direct a substantial portion of the water now delivered into the Upper Utica Conduit via the Mill Creek Tap into the Collierville Powerhouse, through the Collierville Tunnel. Both the tunnel and the Collierville Powerhouse are licensed under Project No. 2409 to the Calaveras County Water District.

3 *a. Type of Application:* Petition for Declaratory Order.

b. Docket No: DI96–8–000.

c. Date Filed: 06/03/96.

d. Applicant: Pacificorp.

e. Name of Project: Bigfork Hydroelectric Project.

f. Location: On the Swan River, near Kalispell, in Flathead County, Montana.

g. Filed Pursuant to: Section 23(b) of the Federal Power Act, 16 U.S.C. §§ 817(b).

h. Applicant Contact: S.A. deSousa, Director Hydro Resources, 920 S.W. Sixth Avenue, Portland, OR 97204–1256, (503) 464–5000.

i. FERC Contact: Diane M. Murray, (202) 219–2682.

j. Comment Date: August 2, 1996.

k. Description of Project: The project consists of: (1) a 300-foot-long, 12-foot-high concrete diversion dam; (2) a reservoir with a storage capacity of 109 acre-feet; (3) an intake structure which diverts water into a one-mile-long conduit; (4) two 72-inch diameter steel penstocks each 130 feet long and one 54-inch diameter penstock 160 feet long; (5) a powerhouse containing two 1,700 kW generators and one generator rated at 750 kW; and (6) appurtenant facilities.

When a Petition for Declaratory Order is filed with the Federal Energy Regulatory Commission, the Federal Power Act requires the Commission to investigate and determine if the interests of interstate or foreign commerce would be affected by the project. The Commission also determines whether or not the project: (1) would be located on a navigable waterway; (2) would occupy or affect public lands or reservations of the United States; (3) would utilize surplus water or water power from a government dam; or (4) if applicable, has involved or would involve any construction subsequent to 1935 that may have increased or would increase the project's head or generating capacity, or have otherwise significantly modified the project's pre-1935 design or operation.

l. Purpose of Project: To produce power.

m. This notice also consists of the following standard paragraphs: B, C1, and D2.

4 *a. Type of Application:* Petition for Declaratory Order.

b. Docket No: DI96–9–000.

c. Date Filed: 06/03/96.

d. Applicant: Pacificorp.

e. Name of Project: Grace-Cove Hydroelectric Project.

f. Location: On the Bear River in Caribou County, Idaho.

g. Filed Pursuant to: Section 23(b) of the Federal Power Act, 16 U.S.C. §§ 817(b).

h. Applicant Contact: S.A. deSousa, Director Hydro Resources, 920 S.W. Sixth Avenue, Portland, OR 97204–1256, (503) 464–5000.

i. FERC Contact: Diane M. Murray, (202) 219–2682.

j. Comment Date: August 2, 1996.

k. Description of Project: The project consists of two developments: *Grace Development* (1) a dam 180.5 feet long and 51 feet high; (2) a reservoir of 250 acre-feet storage; (3) two, 4.8 mile-long conduits; (4) a powerhouse containing three 11,000 kW generators; and (5) appurtenant facilities. *Cove Development* (1) a 140-foot-long, 24-foot-high dam; (2) a conduit; (3) a 528-foot-long penstock; (3) a powerhouse containing a 7,500 kW generator; and (4) appurtenant facilities.

When a Petition for Declaratory Order is filed with the Federal Energy Regulatory Commission, the Federal Power Act requires the Commission to investigate and determine if the interests of interstate or foreign commerce would be affected by the project. The Commission also determines whether or not the project: (1) would be located on a navigable waterway; (2) would occupy or affect public lands or reservations of the United States; (3) would utilize surplus water or water power from a government dam; or (4) if applicable, has involved or would involve any construction subsequent to 1935 that may have increased or would increase the project's head or generating capacity, or have otherwise significantly modified the project's pre-1935 design or operation.

l. Purpose of Project: To produce power.

m. This notice also consists of the following standard paragraphs: B, C1, and D2.

5 a. Type of Application: New Major License.

b. Project No.: 1864–005.

c. Date Filed: March 5, 1985.

d. Applicant: Upper Peninsula Power Company.

e. Name of Project: Bond Falls Project.

f. Location: On the west branches Ontonagon River in Ontonagon and Gogebic Counties, Michigan, and a small portion of northern Vilas County, Wisconsin.

g. Filed Pursuant to: Federal Power Act, 16 U.S.C. 791(a)–825 (r).

h. Applicant Contact: Max O. Curtis, Upper Peninsula Power Company, 600 Lakeshore Drive, P.O. Box 130, Houghton, MI 49931–0130.

i. FERC Contact: Frankie Green (202) 501–7704.

j. Deadline Date: See Standard Paragraph D10.

k. Status of Environmental Analysis: This application has been accepted for filing and is ready for environmental analysis at this time.

l. Description of Project: The Bond Falls Project consists of four developments on the Middle, Cisco (South), and West Branches Ontonagon River. The Ontonagon River system flows north through the western end of Michigan's Upper Peninsula and into western Lake Superior. The project developments are located in Ontonagon and Gogebic Counties, Michigan, and a small portion of northern Vilas County, Wisconsin.

Each project development consists of a storage reservoir or lake, a main dam or dams, and appurtenant facilities. The four project water bodies are Bond Falls flowage, lake Gogebic (Bergland development), Cisco Chain of Lakes, and Victoria reservoir. The Bond Falls, Bergland, and Cisco developments provide seasonal reservoir storage and diversion of river flow to the Victoria development, where the flow is used to generate power.

Bond Falls Development

The Bond Falls development is located on the Middle Branch Ontonagon River about 40 river miles up-stream of the mouth of the Ontonagon River. The applicant operates the development seasonally to store water and to divert river flow from the Middle Branch to the South Branch, which eventually flows into the West Branch, where the discharge is used for hydroelectric generation at the Victoria development. Without the diversion, all flow from the Middle Branch would join the West Branch down-stream of the Victoria development and would be unavailable for power production.

The principal features of the Bond Falls development are the reservoir (Bond Falls flowage), the main dam, the control dam, and the diversion canal. The reservoir has a maximum surface area of 2,160 acres, a maximum operating elevation of 1,475.9 feet above mean sea level, and an effective storage capacity of 39,000 acre-feet at a draw-down of 20 feet.

The main dam consists of an earth-fill embankment about 45 feet high and 900 feet long with a sheet pile corewall and a concrete overflow spillway (crest elevation of 1,462.9 feet) with discharge controlled by a steel radial crest gate (13 feet high by 26 feet wide). Spillway discharge is conveyed by a concrete and rock bottom channel to the river, several hundred feet down-stream of the dam. The bypass system releases flows through the main dam to the Middle Branch. The bypass system consists of a

concrete intake (7.5 feet high by 5.0 feet wide) equipped with a trash rack (0.5-inch bars on 4.5-inch centers), concrete intake conduit (2.75 feet high by 2.5 feet wide), gate well and house, two 24-inch-diameter discharge pipes, and receiving basins. A rectangular weir monitors down-stream releases.

The control dam consists of an earth-fill embankment about 35 feet high and 850 feet long with a steel sheet pile corewall. The crest is 20 feet wide at an elevation of 1,481.9 feet. The control works consist of a concrete intake (13.8 feet high by 10 feet wide) equipped with a trash rack, a concrete intake pipe (5.5 feet in diameter), a gate well, 5-foot-diameter discharge pipe, and concrete receiving basin. Discharge is regulated electrically or manually by a 5-foot-square steel slide gate and is measured by a USGS gage located down-stream in the diversion canal.

The reservoir rim contains three other earth-fill dikes. The largest (the auxiliary dike) is located a few hundred feet southwest of the main dam, is similar in design to the main and control dams, and acts as a fuse-plug spillway during extreme floods. The auxiliary dike is 15 feet high by 250 feet long, with a crest elevation of 1479.4 feet and a crest width of 35 feet. The two smaller dikes are 5 feet high, with crest elevations of 1481.9 feet. One is located just south of the auxiliary dike, and the other is located southeast of the control dam between the reservoir and a seepage pond above nearby Sand Lake.

The diversion canal, which is 20 feet wide and 7,500 feet long, discharges to Roselawn Creek, a tributary of the South Branch. There are two concrete drop structures at separate locations along the canal with drops of 41 and 57 feet. Riprap protection is provided up-stream and down-stream of the drop structures. The remaining canal banks and the bottom are earth-lined.

Bergland Development

The Bergland development is on the West Branch Ontonagon River at river mile 55. The down-stream Victoria development uses releases from Lake Gogebic for power generation. Bergland dam controls the top 4 feet of Lake Gogebic, which has a maximum reservoir area of 14,080 acres, a maximum operating elevation of 1296.2 feet, and an effective storage capacity of 28,200 acre-feet at a draw-down of 2 feet. The dam is 4 feet high by 179 feet long.

There are 24 bays, 7 feet wide each, consisting of a series of wooden planks stacked between steel I-beams.

Cisco Development

The Cisco development consists of the Cisco Chain of Lakes, on the Cisco Branch Ontonagon River at river mile 75. The down-stream Victoria development uses releases from the Cisco dam for power generation. The dam is a timber-decked concrete level control structure 11 feet high by 21 feet long. Flow through the dam is controlled manually by placing or removing wooden planks in either of the two 6-foot, 8.5-inch-wide concrete bays. The Chain of Lakes has a maximum area of 4,025 acres, a maximum operating elevation of 1683.51 feet, and an effective storage capacity of 4,025 acre-feet at a 1-foot draw-down.

Victoria Development

The Victoria development is on the West Branch Ontonagon River at river mile 18 and consists of the Victoria dam and reservoir; a 6,300-foot above-ground pipeline, surge tank, and penstock; a powerhouse and tailrace; and two 69-kV transmission lines. The dam impounds streamflow of the West Branch, which receives tributary inflow from the up-stream Cisco and South Branches, and delivers flow to the powerhouse through the pipeline and penstock. The spillway regulates releases to the 1.5-mile-long bypassed reach of the West Branch.

The original Victoria dam consisted of a 113-foot-high concrete multiple arch-buttress dam. This structure was replaced in 1991 with a roller-compacted concrete (RCC) gravity dam constructed 15 feet down-stream. The original dam remains in place with the upper portion removed.

Based on revised license application drawings filed by the applicant, the new RCC dam is 301 feet long and ties to the original gated spillway to the south and the original intake structure to the north. The new dam contains an ungated spillway section, a low level outlet pipe and control gate, and a small drain pipe that discharges to a stilling basin in front of the dam. Total width of the new dam, gated spillway, intake, and embankments is 675.5 feet. Reservoir elevation, pipeline intake and spillway configurations, and project operations are virtually unchanged from those of the original dam. Maximum reservoir surface area is 250 acres, maximum operating elevation is 910 feet, and effective storage capacity is 3,300 acre-feet at a draw-down of 14 feet.

The Victoria gated spillway consists of four ogee-type concrete bays, each 22 feet wide (crest elevation 898 feet), equipped with a steel radial gate (22 feet wide by 13 feet high) that is raised and lowered by an electrically operated traveling hoist mounted on 6 steel beams. A 4-foot-wide steel-grating walkway provides access across the top of the spillway at an elevation of 918 feet. Spillway discharge flows through a concrete-lined channel before falling 75 feet off the spillway escarpment into the natural stream channel below.

The reinforced concrete intake structure to the pipeline consists of sloping rectangular intakes (10 feet wide by 21.5 feet high) equipped with steel trash racks (0.5-inch bars on 3.75-inch centers). The structure includes an intake gate slot, vent well, and steel-lined concrete transition. The intake superstructure houses a 14-foot-wide by 14.25-foot-high riveted steel intake gate and 40-ton electronically operated fixed gate hoist, air compressors, instrumentation, communication equipment, and miscellaneous other equipment.

The 10-foot-diameter woodstave above-ground pipeline terminates near the powerhouse at a 32-foot-diameter steel surge tank with a height of 120 feet and a capacity of 491,300 gallons. A 10-foot-diameter steel penstock slopes steeply from the surge tank and splits into two 7-foot-diameter pipes before entering the powerhouse. The powerhouse is 30 feet wide, 82 feet long, and 50 feet high above the generating floor. It contains two 6–MW Francis-type vertical shaft turbine-generator units. Each unit is rated at 9,300 hp at 210 feet head and 300 rpm.

The license application also listed two 69-kV transmission lines as part of the project facilities; however, the applicant filed an application for amendment of the license on April 26, 1991 requesting that these lines be excluded from the project because they do not function as ''primary lines,'' as defined in Section 3(11) of the Federal Power Act. The Commission issued an order amending the license on December 9, 1991, which approved this request.

m. Purpose of Project: Project power would be utilized by the applicant for sale to its customers.

n. This notice also consists of the following standard paragraph(s): A4 and D10.

o. Available Location of Application: A copy of the application, as amended and supplemented, is available for inspection and reproduction at the Commission's Public Reference and Files Maintenance Branch, located at 888 First Street, N.E., Room 2A, Washington, D.C., 20426, or by calling (202) 208–1371. A copy is also available for inspection and reproduction at Upper Peninsula Power Company, 600

Lakeshore Drive, Houghton, MI, 49931–0130, or by calling Max Curtis at (906) 487–5063.

6 a. Type of filing: Notice of Intent to File An Application for a New License.

b. Project No.: 2000–010.

c. Date filed: June 3, 1996.

d. Submitted By: Power Authority of the State of New York, current licensee.

e. Name of Project: St. Lawrence-Franklin Delano Roosevelt.

f. Location: On the St. Lawrence River, in the Village of Waddington, Towns of Massena, Louisville, Waddington, and Lisbon, St. Lawrence County, New York.

g. Filed Pursuant to: Section 15 of the Federal Power Act, 18 CFR 16.6 of the Commission's regulations.

h. Effective date of original license: November 1, 1953.

i. Expiration date of original license: October 31, 2003.

j. The project consists of: (1) a concrete gravity-type dam known as Long Sault Dam; (2) the portion of the concrete dam known as Iroquois Dam located in the United States; (3) the half of the Moses-Saunders Dam and Powerhouse having 16 units each capable of producing 57,000-kW located in the United States; (4) about 10.9-miles of dikes; (5) a reservoir having maximum nominal pool elevation 242 feet (IGLD 1955); and (g) appurtenant works and facilities.

The project has a total installed capacity of 912,000-kW.

k. Pursuant to 18 CFR 16.7, information on the project is available at: New York Power Authority, P.O. Box 700, Massena, New York 13662, Attn: Ms. Pat Sharlow, (315) 764–0226, Ext. 431.

l. *FERC contact:* Charles T. Raabe (202) 219–2811.

m. Pursuant to 18 CFR 16.8, 16.9, and 16.10 each application for a new license and any competing license applications must be filed with the Commission at least 24 months prior to the expiration of the existing license. All applications for license for this project must be filed by October 31, 2001.

7 a. Type of Application: Minor License.

b. Project No.: 11547–000.

c. Date Filed: June 5, 1995.

d. Applicant: Summit Hydropower.

e. Name of Project: Hale.

f. Location: On the Quinebaug River in the Town of Putnam, Windham County, Connecticut.

g. Filed Pursuant to: Federal Power Act, 16 U.S.C. §§ 791(a)–825(r).

h. Applicant Contact: Mr. Duncan S. Broatch, 92 Rocky Hill Road, Woodstock, CT 06281, (860) 974–1620.

i. FERC Contact: Charles T. Raabe (202) 219–2811.

j. Deadline Date: September 16, 1996.

k. Status of Environmental Analysis: This application is ready for environmental analysis at this time—see attached paragraph D10.

l. Description of Project: The proposed project would consist of: (1) the 130-foot-long, 24-foot-high Putnam Dam; (2) the reservoir having a 13-acre surface-area and a gross storage capacity of 65 acre-feet at normal surface elevation 253.42 feet m.s.l.; (3) the intake structure having four 3-foot-wide, 5-foot-high wooden head gates; (4) the tunnel forebay having new trashracks; (5) the water conveyance tunnel; (6) the penstock forebay; (7) a relined 7.5-foot-diameter, 100-foot-long steel penstock; (8) the powerhouse containing a new 440–kW generating unit, (9) the 800-foot-long tailrace; (10) transformers; (11) a new 50-foot-long, 480-volt overhead transmission line; and (12) appurtenant facilities.

The project dam is owned by the Town of Putnam, CT. Applicant estimates that the project's average annual energy production would be 2,363,000–kWh. Project energy would be sold to Connecticut Light and Power Company.

m. This notice also consists of the following standard paragraphs: A4 and D10.

n. Available Locations of Application: A copy of the application, as amended and supplemented, is available for inspection and reproduction at the Commission's Public Reference and Files Maintenance Branch, located at 888 First Street, N.E., Washington, D.C. 20426, (202) 208–1371. A copy is also available for inspection and reproduction at 92 Rocky Hill Road, Woodstock, CT 06281, (860) 974–1620 and at the Killingly Public Library, 25 Wescott Road, Danielson, CT 06239.

Standard Paragraphs

A4. Development Application—Public notice of the filing of the initial development application, which has already been given, established the due date for filing competing applications or notices of intent. Under the Commission's regulations, any competing development application must be filed in response to and in compliance with public notice of the initial development application. No competing applications or notices of intent may be filed in response to this notice.

B. Comments, Protests, or Motions to Intervene—Anyone may submit comments, a protest, or a motion to intervene in accordance with the requirements of Rules of Practice and Procedure, 18 CFR 385.210, .211, .214. In determining the appropriate action to take, the Commission will consider all protests or other comments filed, but only those who file a motion to intervene in accordance with the Commission's Rules may become a party to the proceeding. Any comments, protests, or motions to intervene must be received on or before the specified comment date for the particular application.

C. Filing and Service of Responsive Documents—Any filings must bear in all capital letters the title ''COMMENTS'', ''NOTICE OF INTENT TO FILE COMPETING APPLICATION'', ''COMPETING APPLICATION'', ''PROTEST'', ''MOTION TO INTERVENE'', as applicable, and the Project Number of the particular application to which the filing refers. Any of the above-named documents must be filed by providing the original and the number of copies provided by the Commission's regulations to: The Secretary, Federal Energy Regulatory Commission, 888 First Street, N.E., Washington, D.C. 20426. An additional copy must be sent to Director, Division of Project Review, Federal Energy Regulatory Commission, at the above-mentioned address. A copy of any notice of intent, competing application or motion to intervene must also be served upon each representative of the Applicant specified in the particular application.

C1. Filing and Service of Responsive Documents—Any filings must bear in all capital letters the title ''COMMENTS'', ''RECOMMENDATIONS FOR TERMS AND CONDITIONS'', ''PROTEST'', OR ''MOTION TO INTERVENE'', as applicable, and the Project Number of the particular application to which the filing refers. Any of the above-named documents must be filed by providing the original and the number of copies provided by the Commission's regulations to: The Secretary, Federal Energy Regulatory Commission, 888 First Street, N.E., Washington, D.C. 20426. A copy of any motion to intervene must also be served upon each representative of the Applicant specified in the particular application.

D2. Agency Comments—Federal, state, and local agencies are invited to file comments on the described application. A copy of the application may be obtained by agencies directly from the Applicant. If an agency does not file comments within the time specified for filing comments, it will be presumed to have no comments. One copy of an agency's comments must also

be sent to the Applicant's representatives.

D10. Filing and Service of Responsive Documents—The application is ready for environmental analysis at this time, and the Commission is requesting comments, reply comments, recommendations, terms and conditions, and prescriptions.

The Commission directs, pursuant to section 4.34(b) of the regulations (see Order No. 533 issued May 8, 1991, 56 FR 23108, May 20, 1991) that all comments, recommendations, terms and conditions and prescriptions concerning the application be filed with the Commission within 60 days from the issuance date of this notice (August 19, 1996 for Project Nos. 1864–005 and 11547–000). All reply comments must be filed with the Commission within 105 days from the date of this notice (October 1, 1996 for Project Nos. 1864–005 and 11547–000).

Anyone may obtain an extension of time for these deadlines from the Commission only upon a showing of good cause or extraordinary circumstances in accordance with 18 CFR 385.2008.

All filings must (1) bear in all capital letters the title ''COMMENTS'', ''REPLY COMMENTS'', ''RECOMMENDATIONS,'' ''TERMS AND CONDITIONS,'' or ''PRESCRIPTIONS;'' (2) set forth in the heading the name of the applicant and the project number of the application to which the filing responds; (3) furnish the name, address, and telephone number of the person submitting the filing; and (4) otherwise comply with the requirements of 18 CFR 385.2001 through 385.2005. All comments, recommendations, terms and conditions or prescriptions must set forth their evidentiary basis and otherwise comply with the requirements of 18 CFR 4.34(b). Agencies may obtain copies of the application directly from the applicant. Any of these documents must be filed by providing the original and the number of copies required by the Commission's regulations to: The Secretary, Federal Energy Regulatory Commission, 888 First Street, N.E., Washington, D.C. 20426. An additional copy must be sent to Director, Division of Project Review, Office of Hydropower Licensing, Federal Energy Regulatory Commission, at the above address. Each filing must be accompanied by proof of service on all persons listed on the service list prepared by the Commission in this proceeding, in accordance with 18 CFR 4.34(b), and 385.2010.

E. Filing and Service of Responsive Documents—The application is not ready for environmental analysis at this time; therefore, the Commission is not now requesting comments, recommendations, terms and conditions, or prescriptions.

When the application is ready for environmental analysis, the Commission will notify all persons on the service list and affected resource agencies and Indian tribes. If any person wishes to be placed on the service list, a motion to intervene must be filed by the specified deadline date herein for such motions. All resource agencies and Indian tribes that have official responsibilities that may be affected by the issues addressed in this proceeding, and persons on the service list will be able to file comments, terms and conditions, and prescriptions within 60 days of the date the Commission issues a notification letter that the application is ready for an environmental analysis. All reply comments must be filed with the Commission within 105 days from the date of that letter.

All filings must (1) bear in all capital letters the title ''PROTEST'' or ''MOTION TO INTERVENE;'' (2) set forth in the heading the name of the applicant and the project number of the application to which the filing responds; (3) furnish the name, address, and telephone number of the person protesting or intervening; and (4) otherwise comply with the requirements of 18 CFR 385.2001 through 385.2005. Any of these documents must be filed by providing the original and the number of copies required by the Commission's regulations to: The Secretary, Federal Energy Regulatory Commission, 888 First Street, N.E., Washington, D.C. 20426. An additional copy must be sent to Director, Division of Project Review, Office of Hydropower Licensing, Federal Energy Regulatory Commission, at the above address. A copy of any protest or motion to intervene must be served upon each representative of the applicant specified in the particular application.

Dated: June 19, 1996.

Lois D. Cashell,

Secretary.

[FR Doc. 96–16401 Filed 6–26–96; 8:45 am]

BILLING CODE 6717–01–P

FEDERAL COMMUNICATIONS COMMISSION

Procedures for Submitting Comments to the WRC–97 Advisory Committee

AGENCY: Federal Communications Commission.

ACTION: Notice.

SUMMARY: On June 7, 1996 the Commission released a public notice which provides procedures for submitting comments to the WRC–97 Advisory Committee.

FOR FURTHER INFORMATION CONTACT: Crystal Foster, FCC International Bureau at (202) 418–0749, or consult the WRC–97 Homepage on the Internet (http://www.fcc.gov/ib/wrc97/).

SUPPLEMENTARY INFORMATION: 1. On March 14, 1996, the Commission released Public Notice (No. 61997) (Streamlining Notice), that announced its new streamlined World Radiocommunication Conference (WRC) preparatory process. Under this new process, formal Notice of Inquiry (NOI) proceedings are eliminated in favor of developing WRC proposals in the Commission's WRC–97 Advisory Committee. This removes the redundancy that was inherent in our previous ''NOI-WRC Advisory Committee'' process and enables the United States to respond more effectively to the rapidly evolving international environment and to the ITU's new two-year WRC schedule.

2. The Streamlining Notice included general guidelines for submission of public comments to the Advisory Committee. The Notice stated that procedures would be developed to ensure that members of the public continue to have full opportunity to participate in the development of WRC proposals under the new streamlined process, including those parties who do not attend meetings of the Advisory Committee and IWGs.

3. Since the release of the Streamlining Notice, we have gained experience with our new process. We now provide these procedures for submitting comments to the Advisory Committee.

- *Comments on Ongoing Advisory Committee Matters:* Parties who wish to comment on the ongoing deliberations of the Advisory Committee and its IWGs may do so at any time.
- *Comments on Preliminary Proposals:* As announced in the Streamlining Notice, preliminary WRC proposals developed by the Advisory Committee will be released by the Commission in periodic Public Notices. These Public Notices will allow an opportunity for public comment and will provide the appropriate procedures, such as filing deadlines, to be followed.

4. In either case, parties wishing their comments to be considered directly by the appropriate Advisory Committee group and to become part of the Advisory Committee's public record should submit their comments in

writing to Office of the Secretary, Federal Communications Commission, Washington, D.C. 20554, or by e-mail at ''wrc97@fcc.gov.'' Commenters are requested to file an original plus one copy.

5. The comment should reference the Advisory Committee public record file number, ''Reference No. ISP–96–005'' and the appropriate Advisory Committee Informal Working Group, if known, in which their submission should be considered. The FCC staff will ensure that comments filed are considered in the appropriate groups.

6. For the most expeditious and efficient consideration of their comments, parties should refrain from filing comments directly with the Chair of the WRC–97 Advisory Committee, with the Chairs and Vice-Chairs of the Informal Working Groups, with individual FCC staff members or private sector participants in the Advisory Committee process.

Federal Communications Commission.

William F. Caton,

Acting Secretary.

[FR Doc. 96–16394 Filed 6–26–96; 8:45 am]

BILLING CODE 6712–01–P

FEDERAL ELECTION COMMISSION

[Notice 1996–13]

Filing Dates for the Kansas Special Elections

AGENCY: Federal Election Commission.

ACTION: Notice of filing dates for special elections.

SUMMARY: Kansas has scheduled special elections on August 6 and November 5, 1996, to fill the U.S. Senate seat vacated by Senator Robert Dole.

Committees required to file reports in connection with the Special Primary Election on August 6 should file a July Quarterly Report on July 15 and a 12-day Pre-Primary Report on July 25, 1996. Committees required to file reports in connection with both the Special Primary and Special General Election to be held on November 5, must file a July Quarterly Report; a 12-day Pre-Primary Report; an October Quarterly Report on October 15; a 12-day Pre-General Report on October 24; and a Post-General Report on December 5, 1996.

FOR FURTHER INFORMATION CONTACT: Ms. Bobby Werfel, Information Division, 999 E Street, N.W., Washington, DC 20463, Telephone: (202) 219–3420; Toll Free (800) 424–9530.

SUPPLEMENTARY INFORMATION: All principal campaign committees of candidates in the Special Primary and Special General Elections and all other political committees not filing monthly which support candidates in these elections shall file a July quarterly Report on July 15, with coverage dates from the close of the last report filed, or the day of the committee's first activity, whichever is later, through June 30; a 12-day Pre-Primary Report on July 25, with coverage dates from July 1 through July 17; an October Quarterly Report on October 15, with coverage dates from July 18 through September 30; a 12-day Pre-General Report on October 24, with coverage dates from October 1 through October 16; and a Post-General Report on December 5, with coverage dates from October 17 through November 25, 1996.

All principal campaign committees of candidates in the Special Primary election *only* and all other political committees not filing monthly which support candidates in the Special Primary Election shall file a July Quarterly Report on July 15, with coverage dates from the close of the last report filed, or the day of the committee's first activity, whichever is later, through June 30; a 12-day Pre-Primary Report on July 25, with coverage dates from July 1 through July 17; and an October Quarterly Report on October 15, with coverage dates from July 18 through September 30, 1996.

All political committees not filing monthly which support candidates in the Special General Election *only* shall file a 12-day Pre-General Report on October 24, with coverage dates from the last report filed, or the date of the committee's first activity, whichever is later, through October 16, and a Post-General Report on December 5, with coverage dates from October 17 through November 25, 1996.

CALENDAR OF REPORTING DATES FOR KANSAS SPECIAL ELECTIONS

Report	Close of books*	Reg./cert. mailing dates**	Filing date
I. FOR COMMITTEES INVOLVED ONLY IN THE SPECIAL PRIMARY (08/06/96)			
July Quarterly	06/30/96	07/15/96	07/15/96
Pre-Primary	07/17/96	07/22/96	07/25/96
October Quarterly	09/30/96	10/15/96	10/15/96
II. FOR COMMITTEES INVOLVED IN THE SPECIAL PRIMARY (08/06/96) AND SPECIAL GENERAL (11/05/96)			
July Quarterly	06/30/96	07/15/96	07/15/96
Pre-Primary	07/17/96	07/22/96	07/25/96
October Quarterly	09/30/96	10/15/96	10/15/96
Pre-General	10/16/96	10/21/96	10/24/96
Post-General	11/25/96	12/05/96	12/05/96
III. FOR COMMITTEES INVOLVED ONLY IN THE SPECIAL GENERAL (11/05/96)			
July Quarterly	06/30/96	07/15/96	07/15/96
October Quarterly	09/30/96	10/15/96	10/15/96
Pre-General	10/16/96	10/21/96	10/24/96
Post-General	11/25/96	12/05/96	12/05/96

*The period begins with the close of books of the last report filed by the committee. If the committee has filed no previous reports, the period begins with the date of the committee's first activity.

**Reports sent by registered or certified mail must be postmarked by the mailing date; otherwise, they must be received by the filing date.

Dated: June 24, 1996.

Lee Ann Elliott,

Chairman, Federal Election Commission.

[FR Doc. 96–16433 Filed 6–26–96; 8:45 am]

BILLING CODE 6715–01–M

FEDERAL TRADE COMMISSION

[Dkt. C–3619]

Columbia/HCA Healthcare Corporation; Prohibited Trade Practices, and Affirmative Corrective Actions

AGENCY: Federal Trade Commission.

ACTION: Consent order.

SUMMARY: In settlement of alleged violations of federal law prohibiting unfair acts and practices and unfair methods of competition, this consent order permits, among other things, Columbia/HCA and Healthtrust, Inc. to merge, provided that Columbia/HCA divests seven hospitals within twelve months (nine months for the divestiture of three hospitals in the Salt Lake City area), and requires the respondent to terminate its participation in a joint venture with the Orlando Regional Health System. In a modification of the consent agreement, this consent order replaces a prior-approval requirement with a prior-notice provision that requires the respondent, for ten years, to notify the Commission before acquiring another acute care hospital in any of the six market areas at issue, and before transferring an acute care hospital in any of the areas to another entity that already operates one in that area.

DATES: Complaint and Order issued October 3, 1995.[1]

FOR FURTHER INFORMATION CONTACT: Oscar Voss, FTC/S–3115, Washington, D.C. 20580. (202) 326–2750.

SUPPLEMENTARY INFORMATION: On Tuesday, May 23, 1995, there was published in the Federal Register, 60 FR 27292, a proposed consent agreement with analysis In the Matter of Columbia/HCA Healthcare Corporation, for the purpose of soliciting public comment. Interested parties were given sixty (60) days in which to submit comments, suggestions or objections regarding the proposed form of the order.

Comments were filed and considered by the Commission. The Commission has ordered the insurance of the complaint, made its jurisdictional findings are entered an order to divest in disposition of this proceeding.

[1] Copies of the Complaint and the Decision and order are available from the Commission's Public Reference Branch, H–130, 6th Street & Pennsylvania Avenue, N.W., Washington, D.C. 20580.

(Sec, 6, 38 Stat. 721; 15 U.S.C. 46. Interpret or apply sec. 5, 38 Stat. 719, as amended; sec. 7, 38 Stat. 731, as amended; 15 U.S.C. 45, 18)

Donald S. Clark,

Secretary.

[FR Doc. 96–16477 Filed 6–26–96; 8:45 am]

BILLING CODE 6750–01–M

[Dkt. 6459]

Giant Food, Inc.; Prohibited Trade Practices and Affirmative Corrective Actions

AGENCY: Federal Trade Commission.

ACTION: Set aside order.

SUMMARY: This order reopens a 1964 consent order—which prohibited Giant from inducing its suppliers to offer, or receiving from its suppliers, compensation for promotional services or facilities on terms that Giant knew were not proportionally equal to the terms those suppliers offered other retailers—and sets aside the consent order pursuant to the Commission's 1994 Sunset Policy Statement, under which the Commission presumed that the public interest requires terminating competition orders that are more than 20 years old.

DATES: Modified consent order issued April 13, 1964. Set aside order issued September 7, 1995.[1]

FOR FURTHER INFORMATION CONTACT: Daniel Ducore, FTC/S–2115, Washington, D.C. 20580. (202) 326–2526.

SUPPLEMENTARY INFORMATION: In the Matter of Giant Food, Inc. The prohibited trade practices and/or corrective actions are removed as indicated.

(Sec. 6, 38 Stat. 721; 15 U.S.C. 46. Interprets or applies sec. 5, 38 Stat. 719, as amended; 15 U.S.C. 45)

Donald S. Clark,

Secretary.

[FR Doc. 96–16478 Filed 6–26–96; 8:45 am]

BILLING CODE 6750–01–M

[Dkt. C–3651]

Illinois Tool Works Inc.; Prohibited Trade Practices, and Affirmative Corrective Actions

AGENCY: Federal Trade Commission.

ACTION: Consent order.

SUMMARY: In settlement of alleged violations of federal law prohibiting unfair or deceptive acts or practices and unfair methods of competition, this consent order requires Illinois Tool Works, among other things, to divest all of Hobart Brothers' assets and businesses relating to industrial power sources and industrial engine drives to Prestolite Electric Inc. or another Commission-approved acquirer.

DATES: Complaint and Order issued April 23, 1996.[1]

FOR FURTHER INFORMATION CONTACT: Ann Malester, FTC/S–2308, Washington, DC, 20580. (202) 326–2682.

SUPPLEMENTARY INFORMATION: On Thursday, February 8, 1996, there was published in the Federal Register, 61 FR 4778, a proposed consent agreement with analysis In the Matter of Illinois Tool Works Inc., for the purpose of soliciting public comment. Interested parties were given sixty (60) days in which to submit comments, suggestions or objections regarding the proposed form of the order.

No comments having been received, the Commission has ordered the issuance of the complaint in the form contemplated by the agreement, made its jurisdictional findings and entered an order to divest, as set forth in the proposed consent agreement, in disposition of this proceeding.

(Sec. 6, 38 Stat. 721; 15 U.S.C. 46. Interpret or apply sec. 5, 38 Stat. 719, as amended; sec. 7, 38 Stat. 731, as amended; 15 U.S.C. 45, 18)

Donald S. Clark,

Secretary.

[FR Doc. 96–16479 Filed 6–26–96; 8:45 am]

BILLING CODE 6750–01–M

[Dkt. C–3253]

KKR Associates, L.P.; Prohibited Trade Practices and Affirmative Corrective Actions

AGENCY: Federal Trade Commission.

ACTION: Set aside order.

SUMMARY: This order reopens a 1989 consent order—which required KKR Associates to divest, within twelve months, certain assets and businesses associated with RJR Nabisco or Beatrice/Hunt-Wesson, and prohibited them from making certain acquisitions without prior Commission approval—and sets aside the prior approval provisions of the consent order pursuant to the Commission's Prior Approval Policy Statement. Under that Policy Statement, the Commission presumes that the public interest requires reopening the

[1] Copies of the Modified Consent Order and Set Aside Order are available from the Commission's Public Reference Branch, H–130, 6th Street and Pennsylvania Avenue, N.W., Washington, D.C. 20580.

[1] Copies of the Complaint and the Decision and Order are available from the Commission's Public Reference Branch, H–130, 6th Street & Pennsylvania Avenue, N.W., Washington, DC, 20580.

prior approval provisions in outstanding merger orders and making them consistent with the policy.

DATES: Consent order issued June 13, 1989. Set aside order issued October 31, 1995.[1]

FOR FURTHER INFORMATION CONTACT: Elizabeth Piotrowski, FTC/S–2115, Washington, D.C. 20580. (202) 326–2623.

SUPPLEMENTARY INFORMATION: In the Matter of KKR Associates, L.P. The prohibited trade practices and/or corrective actions are removed as indicated.

(Sec. 6, 38 Stat. 721; 15 U.S.C. 46. Interpret or apply sec. 5, 38 Stat. 719, as amended; sec. 7, 38 Stat. 731, as amended; 15 U.S.C. 45, 18)

Donald S. Clark,

Secretary.

[FR Doc. 96–16480 Filed 6–26–96; 8:45 am]

BILLING CODE 6750–01–M

[1] Copies of the Consent Order and Set Aside Order are available from the Commission's Public Reference Branch, H–130, 6th Street and Pennsylvania Avenue, N.W., Washington, D.C. 20580.

[Docket C–3378]

Mannesmann, A.G.; Prohibited Trade Practices and Affirmative Corrective Actions

AGENCY: Federal Trade Commission.

ACTION: Set aside order.

SUMMARY: This order reopens a 1992 consent order—which required Mannesmann to divest the Buschman Co. and to obtain, for 10 years, Commission approval prior to acquiring any business that manufactures and sells certain conveyor systems—and sets aside the consent order pursuant to the Commission's Prior Approval Policy Statement. The order cites the availability of the premerger notification and waiting period requirements, and noted that under the Policy Statement, the Commission presumes that the public interest requires setting aside the prior approval requirement in Paragraph V of the order.

DATES: Consent Order issued March 24, 1992. Set aside order issued October 11, 1995.[1]

FOR FURTHER INFORMATION CONTACT: Ann Malester, FTC/S–2308, Washington, DC 20580. (202) 326–2682.

SUPPLEMENTARY INFORMATION: In the Matter of Mannesmann, A.G. The prohibited trade practices and/or corrective actions are removed as indicated.

(Sec. 6, 38 Stat. 721; 15 U.S.C. 46. Interpret or apply sec. 5, 38 Stat. 719, as amended; sec. 7, 38 Stat. 731, as amended; 15 U.S.C. 45, 18)

Donald S. Clark,

Secretary.

[FR Doc. 96–16481 Filed 6–26–96; 8:45 am]

BILLING CODE 6750–01–M

[1] Copies of the Consent Order and Set Aside Order are available from the Commission's Public Reference Branch, H–130, 6th Street and Pennsylvania Avenue, NW., Washington, DC 20580.

[Docket C–3646]

Service Corporation International; Prohibited Trade Practices, and Affirmative Corrective Actions

AGENCY: Federal Trade Commission.

ACTION: Consent order.

SUMMARY: In settlement of alleged violations of Federal law prohibiting unfair or deceptive acts or practices and unfair methods of competition, this consent order permits Service Corporation International (SCI), the largest owner of funeral homes in North America, to acquire Gilbraltar Mausoleum Corporation and requires SCI, among other things, to divest, within 12 months, a number of properties, including assets in Amarillo, Texas, and Brevard and Lee Counties, Florida, to Commission-approved acquirers. In addition, the consent order requires SCI, for 10 years, to notify the Commission before acquiring certain similar assets in any of these markets.

DATES: Complaint and Order issued March 21, 1996.[1]

FOR FURTHER INFORMATION CONTACT: Harold Kirtz, Federal Trade Commission, Atlanta Regional Office, 1718 Peachtree St., NW., Room 1000, Atlanta, GA. 30367. (404) 347–4837.

SUPPLEMENTARY INFORMATION: On Friday, January 19, 1996, there was published in the Federal Register, 61 FR 1512, a proposed consent agreement with analysis In the Matter of Service Corporation International, for the purpose of soliciting public comment. Interested parties were given sixty (60) days in which to submit comments, suggestions or objections regarding the proposed form of the order.

No comments having been received, the Commission has ordered the issuance of the complaint in the form contemplated by the agreement, made its jurisdictional findings and entered an order to divest, as set forth in the proposed consent agreement, in disposition of this proceeding.

(Sec. 6, 38 Stat. 721; 15 U.S.C. 46. Interpret or apply sec. 5, 38 Stat. 719, as amended; sec. 7, 38 Stat. 731, as amended; 15 U.S.C. 45, 18)

Donald S. Clark,

Secretary.

[FR Doc. 96–16482 Filed 6–26–96; 8:45 am]

BILLING CODE 6750–01–M

[1] Copies of the Complaint and the Decision and Order are available from the Commission's Public Reference Branch, H–130, 6th Street & Pennsylvania Avenue, NW., Washington, DC 20580.

[Dkt. C–3478]

The Valspar Corporation, et al., Prohibited Trade Practices and Affirmative Corrective Actions

AGENCY: Federal Trade Commission.

ACTION: Modifying order.

SUMMARY: The order reopens a 1994 consent order that settled allegations that Valspar's acquisition of the Resin Products Division of Cargill, Inc. would eliminate competition between two leading U.S. producers of coating resins. This order modifies the consent order by deleting the prior approval requirements in Paragraphs VI and VII pursuant to the Commission's Prior Approval Policy, under which the Commission presumes that the public interest requires reopening prior approval provisions in outstanding merger orders and making them consistent with the policy.

DATES: Consent order issued January 25, 1994. Modifying order issued August 29, 1995.[1]

FOR FURTHER INFORMATION CONTACT: Daniel Ducore, FTC/S–2115, Washington, D.C. 20580. (202) 326–2526.

SUPPLEMENTARY INFORMATION: In the matter of The Valspar Corporation, et al. The prohibited trade practices and/or corrective actions as set forth at 59 FR 11610, are changed, in part, as indicated in the summary.

(Sec. 6, 38 Stat. 721; 15 U.S.C. 46. Interpret or apply sec. 5, 38 Stat. 719, as amended; sec. 7, 38 Stat. 731, as amended; 15 U.S.C. 45, 18)

Donald S. Clark,

Secretary.

[FR Doc. 96–16483 Filed 6–26–96; 8:45 am]

BILLING CODE 6750–01–M

[1] Copies of the Modifying Order and Commissioner Azcuenaga's statement are available from the Commission's Public Reference Branch, H–130, 6th Street and Pennsylvania Avenue, N.W., Washington, D.C. 20580.

DEPARTMENT OF HEALTH AND HUMAN SERVICES

Public Health Service; Commission on Dietary Supplement Labels

AGENCY: Office of Public Health and Science, Office of Disease Prevention and Health Promotion.

ACTION: Extension of Comment Period.

SUMMARY: The Department of Health and Human Services (HHS) is providing notice of an extension of the time deadline for submission of written comments.

DATES: Written comments on the scope and intent of the Commission's objectives must be received by 5:00 p.m. E.D.T. on August 30, 1996.

ADDRESSES: Kenneth D. Fisher, Ph.D., Executive Director, Commission on Dietary Supplement Labels, Office of Disease Prevention and Health Promotion, Room 738G, Hubert H. Humphrey Building, 200 Independence Ave., SW., Washington, DC 20201.

FOR FURTHER INFORMATION CONTACT:

Kenneth D. Fisher, Ph.D., (202) 690–7102.

SUPPLEMENTARY INFORMATION: Public Law 103–417, Section 12, authorized the establishment of a Commission on Dietary Supplement Labels whose seven members have been appointed by the President. The appointments to the Commission by the President and the establishment of the Commission by the Secretary of Health and Human Services reflect the commitment of the President and the Secretary to the development of a sound and consistent regulatory policy on labeling of dietary supplements.

The Commission is charged with conducting a study and providing recommendations for regulation of label claims and statements for dietary supplements, including the use of supplemental literature in connection with their sale and, in addition, procedures for evaluation of label claims. The Commission is expected to evaluate how best to provide truthful, scientifically valid, and non-misleading information to consumers in order that they may make informed health care choices for themselves and their families. The Commission's study report may include recommendations on legislation, if appropriate and necessary.

Notices announcing meetings of the Commission on Dietary Supplement Labels were published on February 1, 1996 (61 FR 3714), February 1, 1996 (61 FR 3714), February 23, 1996 (61 FR 7005), March 29, 1996 (61 FR 14102), April 4, 1996 (61 FR 15076), and May 16, 1996 (61 FR 24798). Each notice also indicated that written comments on the tasks of the Commission were due on June 30, 1996. This notice is to provide an extension of the deadline for receiving comments.

Dated: June 13, 1996.

Claude Earl Fox,

Deputy Assistant Secretary for Health (Disease Prevention and Health Promotion).

[FR Doc. 96–16405 Filed 6–26–96; 8:45 am]

BILLING CODE 4160–17–M

Agency for Toxic Substances and Disease Registry

[ATSDR–110]

Minimal Risk Levels for Priority Substances and Guidance for Derivation; Republication

Editorial Note: The document set forth below was originally published at 61 FR 25873, May 23, 1996, and is reprinted because of typesetting errors.

AGENCY: Agency for Toxic Substances and Disease Registry (ATSDR), Department of Health and Human Services (HHS).

ACTION: Notice.

SUMMARY: The Comprehensive Environmental Response, Compensation, and Liability Act (CERCLA) (42 U.S.C. 9604 et seq.), as amended by the Superfund Amendments and Reauthorization Act (SARA) (Pub. L. 99–499), requires that ATSDR develop jointly with the U.S. Environmental Protection Agency (EPA), in order of priority, a list of hazardous substances most commonly found at facilities on the CERCLA National Priorities List (NPL) (42 U.S.C. 9604(i)(2)); prepare toxicological profiles for each substance included on the priority list of hazardous substances, and to ascertain in the toxicological profiles, significant human exposure levels (SHELs) for hazardous substances in the environment, and the associated acute, subacute, and chronic health effects (42 U.S.C. 9604(i)(3)); and assure the initiation of a research program to fill identified data needs associated with the substances (42 U.S.C. 9604(i)(5)). The ATSDR Minimal Risk Levels (MRLs) were developed in response to the mandate for SHELs and to provide screening levels for health assessors and other responders to identify contaminants and potential health effects that may be of concern at hazardous waste sites and releases.

This notice announces the internal guidance for derivation of MRLs for priority hazardous substances by ATSDR. The guidance represents the agency's current approach to deriving MRLs and reflects the most current scientific assessment. Comments from the public on the process of deriving MRLs are welcome. The MRLs for a particular substance are published in the toxicological profile for that substance. A listing of the current published MRLs is provided at the end of the notice.

ADDRESSES: Comments on this notice should bear the docket control number ATSDR–110 and should be submitted to: Division of Toxicology, Agency for Toxic Substances and Disease Registry, Mailstop E–29, 1600 Clifton Road, NE., Atlanta, Georgia 30333.

FOR FURTHER INFORMATION CONTACT: Dr. Selene Chou, Division of Toxicology, Agency for Toxic Substances and Disease Registry, 1600 Clifton Road, NE., Mailstop E–29, Atlanta, Georgia 30333, telephone (404)639–6308 or FAX (404)639–6315.

SUPPLEMENTARY INFORMATION: CERCLA requires that ATSDR prepare toxicological profiles for priority hazardous substances, and to ascertain significant human exposure levels for these substances in the environment, and the associated acute, subacute, and chronic health effects (42 U.S.C. 9604(i)(3)). Minimal Risk Levels (MRLs) were developed as an initial response to the mandate. Following discussions with scientists within the HHS and the EPA, ATSDR chose to adopt a practice similar to that of the EPA's Reference Dose (RfD) and Reference Concentration (RfC) for deriving substance-specific levels. An MRL is an estimate of the daily human exposure to a hazardous substance that is likely to be without appreciable risk of adverse noncancer health effects over a specified duration of exposure. These substance- specific estimates, which are intended to serve as screening levels, are used by ATSDR health assessors and other responders to identify contaminants and potential health effects that may be of concern at hazardous waste sites and releases. It is important to note that MRLs are not intended to define clean-up or action levels for ATSDR or other Agencies.

The toxicological profiles include an examination, summary, and interpretation of available toxicological information and epidemiologic evaluations of a hazardous substance. During the development of toxicological profiles, MRLs are derived when ATSDR determines that reliable and sufficient data exist to identify the target organ(s) of effect, or the most sensitive health effect(s) for a specific exposure duration for a given route of exposure to the substance. MRLs are based on noncancer health effects only and are not based on a consideration of cancer effects. Inhalation MRLs are exposure concentrations expressed in units of parts per million (ppm) for gases and volatiles, or milligrams per cubic meter

(mg/m3) for particles. Oral MRLs are expressed as daily human doses in units of milligrams per kilogram per day (mg/kg/day).

ATSDR uses the no-observed-adverse-effect-level/uncertainty factor approach to derive MRLs for hazardous substances. The MRLs are set below levels that, based on current information, might cause adverse health effects in the people most sensitive to such substance-induced effects (Barnes and Dourson 1988; EPA 1990). MRLs are derived for acute (1–14 days), intermediate (15–364 days), and chronic (365 days and longer) exposure durations and for the oral and inhalation routes of exposure. Currently, MRLs for the dermal route of exposure are not derived because ATSDR has not yet identified a method suitable for this route of exposure. MRLs are generally based on the most sensitive substance-induced end point considered to be of relevance to humans. ATSDR does not use serious health effects (such as irreparable damage to the liver or kidneys, or birth defects) as a basis for establishing MRLs. Exposure to a level above the MRL does not mean that adverse health effects will occur.

MRLs are intended to serve as a screening tool to help public health professionals decide where to look more closely. They may also be viewed as a mechanism to identify those hazardous waste sites or other hazardous substance exposures that are not expected to cause adverse health effects. Most MRLs contain some degree of uncertainty because of the lack of precise toxicological information on the people who might be most sensitive (e.g., infants, elderly, and nutritionally or immunologically compromised) to the effects of hazardous substances. ATSDR uses a conservative (i.e., protective) approach to address these uncertainties, consistent with the public health principle of prevention. Although human data are preferred, MRLs often must be based on results of animal studies because relevant human studies are lacking. In the absence of evidence to the contrary, ATSDR assumes that humans are more sensitive than animals to the effects of hazardous substances, and that certain persons may be particularly sensitive. Thus, the resulting MRL may be as much as a hundredfold below levels shown to be nontoxic in laboratory animals.

Proposed MRLs undergo a rigorous review process. They are reviewed by the Health Effects/MRL Workgroup within the Division of Toxicology; an expert panel of peer reviewers; the agency wide MRL Workgroup, with participation from other federal agencies, including EPA; and are submitted for public comment through the toxicological profile public comment period. Each MRL is subject to change as new information becomes available concomitant with updating the toxicological profile of the substance. MRLs in the most recent toxicological profiles supersede previously published levels. A listing of the current published MRLs is provided at the end of this notice.

Categories Used to Derive MRLs

The following health effect end points can be used to derive MRLs:

Systemic
- Respiratory
- Cardiovascular
- Gastrointestinal
- Hematological
- Musculoskeletal
- Hepatic
- Renal
- Endocrine
- Dermal
- Ocular
- Metabolic
- Body weight change
- Other systemic effects
- Immunological and Lymphoreticular
- Neurological
- Reproductive
- Developmental

To provide a better analysis of the toxic potential of the profiled substance, the same effect can be considered under more than one system category; for example, behavioral effects in the offspring can be either neurological or developmental. However, only one system category per exposure route and duration should be chosen as the basis for deriving the MRL. If two different effects within two different systems would result in the same MRL value, the MRL should be derived from the one that is best supported by data from all exposure routes and durations.

Classification of End Points as NOAELs, Less Serious LOAELs or Serious LOAELs

MRLs are derived from no-observed-adverse-effect levels (NOAELs). In the absence of NOAELs, MRLs can be derived from less serious lowest-observed-adverse-effect levels (LOAELs). MRLs are not derived from serious LOAELs. In its 1986–1988 Biennial Report Volume II, ATSDR defines an adverse health effect as a harmful or potentially harmful change in the physiologic function, psychologic state, or organ structure that may result in an observed deleterious health outcome. Adverse health effects may be manifested in pathophysiologic changes in target organs, psychologic effects, or overt disease. This definition is interpreted to indicate that any effect that enhances the susceptibility of an organism to the deleterious effects of other chemical, physical, microbiological, or environmental influences should be considered adverse.

ATSDR acknowledges that a considerable amount of judgement is required in this process and that, in some cases, there will be insufficient data to decide whether or not an effect will lead to significant dysfunction. ATSDR generally will not derive an MRL if no adverse health effect has been reported in the published peer reviewed literature in any target organ (e.g., all free standing NOAELs) for a given duration. However, data from other durations and routes of exposure may lend support for selecting an appropriate end point to derive an MRL.

Deciding whether an end point is a NOAEL or a LOAEL depends in part upon the toxicity that occurs at other doses in the studies evaluated, and in part upon knowledge regarding the mechanism of toxicity of the substance. The distinction between less serious and serious LOAEL is intended to help the users of the toxicological profiles see at what levels of exposure ''major'' effects begin to appear, and whether the less serious effects occur at approximately the same levels as serious effects or at substantially lower levels of exposure. In general, a dose that evokes failure in a biological system and can lead to morbidity or mortality (e.g., acute respiratory distress or death) is referred to as a serious LOAEL. A more specific classification scheme is as follows.

No Adverse Effects

- Weight loss or decrease in body weight gain of less than 10%.
- Changes in organ weight of nontarget organ tissues not associated with abnormal morphologic or biochemical changes.
- Increased mortality over controls that is not statistically significant ($p > 0.05$).
- Some adaptive responses.

Less Serious Adverse Effects

- Reversible cellular alterations at the ultrastructural level (e.g., dilated endoplasmic reticulum) and at the light-microscopy level (e.g., cloudy swelling, fatty change).
- Necrosis (dependent upon location, distribution, reversibility or the degree of associated dysfunction), metaplasia, or atrophy with no apparent decrement of organ function.

- Serum chemistry changes, e.g., moderate elevations of serum aspartate aminotransferase (SGOT), serum alanine aminotransferase (SGPT).
- Weight loss or decrease in body weight gain of 10%–19%.
- Some adaptive responses.

Serious Effects

- Death
- Clinical effects of significant organ impairment (e.g., convulsions, icterus, cyanosis).
- Morphologic changes in organ tissues that potentially could result in severe dysfunction (e.g., marked necrosis of hepatocytes or renal tubules).
- Weight loss or decrease in body weight gain of 20% or greater.
- Serum chemistry changes (e.g., major elevations of SGOT, SGPT)
- Major metabolic effects (e.g., ketosis, acidosis, alkalosis).
- Cancer effects.

Additional guidance on the assessment of end-point-specific health effects is available upon request.

The Adequacy of Database for Derivation of an MRL

It is difficult to provide strict rules governing this determination. Each profiled substance presents its own unique situation. The following key points should be considered:

- Good quality human data are generally preferred over animal data.
- Only one MRL is derived per exposure period (acute, intermediate, or chronic) for each route of exposure.
- The MRL is generally based on the highest NOAEL (that does not exceed a LOAEL) or the lowest LOAEL for the most sensitive end point for that route and exposure period.
- Although not a preferred end point for MRL derivation, decreased body weight gain can be used when the decrease is greater than 10% and when the study provides some indication that weight loss is due to a systemic effect of toxicant and not reduced food and/or water intake.
- It is preferable to derive MRLs using data for each exposure duration. However, when this is not possible because of limitations of the database for a given duration, an MRL derived for one duration may sometimes be applicable to MRL(s) for other duration(s) of the same route based on consideration of the overall database.

Selection of Most Sensitive Effect

- The MRLs are based on the concept that a threshold level of exposure exists below which no noncancer health effect is likely to occur, and, therefore, an exposure level protective against the most sensitive effect would also be protective against all other effects. The most sensitive effect is the first adverse effect that occurs or is expected to occur in humans as dose increases. However, information on the mechanisms of action should be considered when assessing the significance of the effects. Where the target organ of effect is not clearly identified, an MRL is usually not derived. However, the lack of quantitative data for a particular system category does not preclude derivation of an MRL if other evidence, such as information from human case studies, toxicokinetics, and other exposure routes, indicates that this system would not be expected to be most sensitive to the substance for the exposure route and duration of concern.

Toxicokinetics data enter into consideration when comparing information across species, routes, and durations for determination of the most sensitive effect. Comparison of the metabolism of the compound exhibiting the toxic effect in animals with its metabolism in humans may affect the choice of the most sensitive end point. Toxicokinetic differences among species and for various chemical forms of the compound may help to explain an apparent inconsistency among studies. Differences across routes of exposure can also be explained by different rates of absorption, metabolism (both detoxication and activation), and excretion.

Selection of a Representative, Quality Study for MRL Derivation

ATSDR emphasizes its preference for using data from humans whenever such data are reliable and appropriate for MRL derivation. However, human studies must be of sufficient duration and contain an adequate number of documented exposed individuals to be useful in risk assessment. In the absence of adequate human studies, animal studies are used. The author(s) of the study must provide enough information on the oral dose or inhalation exposure concentration administered to the treated animals to allow for estimation of an equivalent human oral dose or inhalation exposure. For both oral and inhalation studies, the data presented in the study should at least include the air, water, or food concentration, the duration of exposure, the frequency of exposure (i.e., per day and per week), the age of the animals, and evidence that the food and water consumption rates were not abnormal (e.g., from weight gain data) for an animal of similar age.

Background documents on general factors that ATSDR considers in evaluating the quality of a study are available upon request. Other general principles that have been accepted in practice when evaluating studies include:

- Considerations to the exposure scenario more likely to occur in environmental exposures. For example, drinking water or feeding studies are preferred over gavage oil studies for oral exposures.
- Determination whether the study data show a dose-response consistent with other studies.

The following effects are not used for MRL derivation:

- Increased incidence of mortality.
- Serious LOAELs.
- Health effects that occur in test species as a result of mechanisms, or metabolic processes that are not found in humans (e.g., α2μ-globulin nephropathy in male rats).
- Spontaneously occurring disorders that are species and gender related (e.g., chronic progressive nephropathy in male rats).
- Effects of unknown biological significance, based on mechanism of action, that do not affect known target organs.
- Cancer effects.

Computation of Inhalation MRLs

1. Extrapolating From Animals to Humans

When animal data is used in the absence of adequate quantitative human data, exposure concentrations should be converted to human equivalent concentrations by using dosimetry adjustment in accordance with EPA (1990), ''Interim Methods for Development of Inhalation Reference Doses'' (EPA/600/8–90/066A, August 1990). Standard reference values should be obtained from EPA (1988): ''Recommendations for and Documentation of Biological Values for Use in Risk Assessment'' (EPA 600–6–87/008, February, 1988).

For inhalation exposures to gases or vapors, it may be necessary to convert to human equivalent exposures for respiratory effects (e.g., using the regional gas dose ratio for the targeted region of the respiratory tract) or extra-respiratory effects (e.g., using the blood to air partition coefficient ratio).

For inhalation exposure to particles, it may also be necessary to convert to human equivalent exposures for respiratory effects (e.g., using the regional deposited dose ratio for the targeted region of the respiratory tract), or extrarespiratory effects (e.g., using the

regional deposited dose ratio and uptake from the entire respiratory system).

2. Adjusting From Intermittent to Continuous Dosing

ATSDR defines an MRL as ''an estimate of the daily human exposure to a hazardous substance that is likely to be without appreciable risk of adverse noncancer health effects over a specified duration of exposure''. The ideal study would involve continuous dosing over the course of the study. If a study did not involve continuous dosing over the entire exposure period, an adjustment is usually made. The ''intermittent exposure dose'' (either the NOAEL or LOAEL of the critical effect selected to be used for MRL derivation) is multiplied by correction factors to adjust for full day and week exposures. For example, in intermediate (longer than 14 days) or chronic (longer than 364 days) studies in which the experimental animals were dosed for 6 hours a day for 5 days a week, the estimated ''adjusted dose'' becomes:

Adjusted dose = Intermittent dose × (6 hours/24 hours) × (5 days/7 days)

Intermediate and chronic duration inhalation studies are usually dose-adjusted for day and week exposures; acute duration inhalation studies can be duration adjusted from intermittent exposures to 24 hours continuous exposure, but are not adjusted to 1 week. For example, acute studies in which animals were exposed for 6 hours/day for 3 days can be adjusted as follows:

Adjusted dose = Intermittent dose × (6 hours/24 hours)

However, making duration adjustments may not be appropriate in every instance. The toxicokinetics and mechanism of action should be examined to the fullest extent possible before a determination is made to adjust for intermittent exposures. The following are some factors to consider in adjusting for dose and duration.

- When the critical effects are mainly dependent on the exposure concentrations and the substance being tested is rapidly metabolized and/or excreted, dose adjustment is inappropriate.
- If the effects being examined are mainly duration dependent (e.g., longer periods of exposure increase the severity of the effects being studied) and metabolism/excretion is moderate to slow, or the study identifies a cumulative effect, duration adjustment may be appropriate.

3. Converting From Salt to Parent Substance

Salt concentrations or doses are converted to equivalent concentrations or doses of the parent substance by multiplying by the molecular weight ratio of parent to salt.

Computation of Oral MRLs

1. Converting From Concentration to Dose

For feeding studies, the equation for the conversion from food concentrations is:

(ppm in food) × (f/kg body weight) = mg/kg/day

The food consumption factor (f) is kg of food consumed per day. Unless the food consumption rate and body weights are available, standard reference values should be obtained from EPA (1988).

For drinking water studies, the equation for conversion from water concentrations is:

(ppm in water) × (C/kg body weight) = mg/kg/day

The water consumption rate (C) is liters of water consumed per day. Unless C and body weights are provided in the study, standard reference values should be obtained from EPA (1988) or EPA (1986), as appropriate.

2. Converting From Intermittent to Daily Dosing

By definition an MRL is ''an estimate of the daily human exposure to a hazardous substance that is likely to be without an appreciable risk of adverse noncancer health effects over a specified duration of exposure''. If the principal study did not involve daily dosing over the entire exposure period, an adjustment is usually made. The ''intermittent dose'' is multiplied by the fraction of the study days over which the test animals were actively dosed. Acute oral studies are not adjusted to 1 week; intermediate and chronic oral studies are usually dose-adjusted to full week exposures. For example, for animals orally dosed weekly 5 days a week, the estimated ''continuous dose'' becomes:

adjusted dose = intermittent dose × (5 days/7 days)

Uncertainty factors and modifying factor

When sufficient human data are not available to allow an accurate assessment of noncancer health risks, ATSDR may extrapolate from available information using uncertainty factors (UFs) to account for different areas of uncertainty in the database to derive MRLs. In addition, a modifying factor (MF) may be applied to reflect additional scientific judgement on the database.

MRLs are derived from human equivalent no-observed-adverse-effect levels and are calculated as follows:

$$MRL = (NOAEL)_{HEC} / (UF \times MF)$$

When an appropriate NOAEL does not exist, the lowest LOAEL should be used and a UF is applied for the use of a LOAEL. Additional uncertainty factors for human variability to protect sensitive subpopulations, for interspecies extrapolation when animal studies are used for derivation of MRLs, and for extrapolation across exposure durations are also used.

The default value for each individual UF is 10; if complete certainty in data exists, a value of one can be used; and an intermediate value is three. By multiplying these individual uncertainty factors, a combined UF is obtained.

The use of UFs and MFs should be based on scientific judgement on a case-by-case basis. General guidelines are as follows:

Intrahuman variation

An UF of 10 is generally used to account for intrahuman variation. However, a UF of 3 or 1 may be applied when a large epidemiologic study or a study of the sensitive population was used.

Interspecies Extrapolation

In the absence of adequate human data, animal data are used; a UF of 10 is generally used to account for extrapolation from animals to humans. However, a UF of 3 or 1 may also be used when comparative toxicological data indicate that similar effects are expected in humans at comparable exposure levels. For inhalation MRLs, when dosimetry adjustment is made for converting animal exposure levels to human equivalent concentrations, a UF of 3 is generally applied to account for any remaining uncertainty (Jarabek and Segal 1994).

LOAEL to NOAEL Extrapolation

MRLs are derived from NOAELs. In the absence of a NOAEL, the lowest LOAEL that causes less serious adverse health effects is used, and a UF of 10 is generally applied. When the less serious LOAEL approaches the threshold level, that is, only minimal effects are observed representing an early indication of toxicity, the effect level is considered to be a minimal LOAEL, and a UF of 3 may be used.

Extrapolation Across Durations

It is preferable to derive MRLs using data for each exposure duration. However, when the database supports extrapolation across acute, intermediate, or chronic exposure durations, a UF may be applied based on scientific judgement. For example, the chronic inhalation MRL for chlordane was derived from the intermediate inhalation MRL with an additional UF of 10 to account for across duration extrapolation; the chronic inhalation MRL was supported by the limited data on chronic exposure as well as the data on oral exposure.

Modifying Factor (MF)

An MF greater than zero and up to 10 may be applied to reflect additional concerns about the database not covered by the UFs. The default value for MF is 1. An example is the use of an MF of 3 to account for the incomplete database in deriving the chronic oral MRL for 4,4′-methylenebis(2-chloroaniline). Another possible consideration is that if a test substance is known to bioaccumulate, some studies may overestimate the dose needed to cause effects. In such cases, a modifying factor may be applied.

EPA RfDs and ATSDR MRLs

The current approach for MRL derivation by ATSDR is similar to the methods used by EPA to derive Reference Doses (RfDs) and Reference Concentrations (RfCs) for chronic exposures. The following table shows the difference in methodology used by ATSDR and EPA in deriving MRLs and RfDs/RfCs respectively.

As with RfD methodology, in deriving MRLs, ATSDR uses UFs and MFs to account for extrapolation from animals to humans, from LOAEL to NOAEL, for intraspecies variation, for across duration extrapolation, and for professional judgement on the database. In addition, EPA uses a UF for an incomplete database (EPA 1990) whereas ATSDR incorporates scientific judgement, including an incomplete database in the MF. However, ATSDR does not extrapolate across route of exposure at this time. It is recognized that the EPA derives RfDs as part of its regulatory decision-making process. Extrapolation across route of exposure (most commonly using data from inhalation studies to estimate levels by the oral route) is sometimes used to develop an RfD where there is inadequate route-specific information.

Because MRLs may be based on more recent data and are derived using a slightly different methodology, or because MRLs are derived as a result of different scientific judgement, MRLs and RfDs (or RfCs) for the same substance are not necessarily of the same value.

	MRL	RfD/RfC
Exposure duration.	Acute Intermediate Chronic	Chronic.
Route of exposure.	Oral	Oral.
	Inhalation	Inhalation.
UFs used:		
Human variability.	Yes	Yes.
Interspecies extrapolation.	Yes	Yes.
LOAEL to NOAEL.	Yes	Yes.
Extrapolation across duration.	Yes	Yes.
Incomplete database.	No	Yes.
Across route extrapolation.	No	Yes.
MF	Yes	Yes.

MRLs for Essential Trace Elements

Since many nutritionally essential elements have been found to be common contaminants at some toxic waste sites, consideration was given to both essentiality and toxicity when deriving MRLs for these substances. Special reference was given to background levels and levels that have been published as Recommended Dietary Allowances (RDA) or Estimated Safe and Adequate Daily Dietary Intakes (ESADDIs) by the Food and Nutrition Board of the National Research Council. MRLs should not be in conflict with the corresponding RDAs and should be protective for all age groups.

MRLs vs. Ambient Levels

Since MRLs serve as screening tools for health assessors, it is important to compare MRLs with ambient levels reported in environmental monitoring studies. When MRLs are lower than ambient levels, the relevance of the MRLs is in question, and special consideration is warranted.

Future Approaches

ATSDR is considering the application of physiologically based pharmacokinetic (PBPK) modeling to enhance understanding of dose and across-route extrapolations. In addition, ATSDR is evaluating the utility of Benchmark Dose modelling, to obtain low-incidence response exposure levels calculated from mathematically fitted dose-response curves, as an adjunct to the current NOAEL/LOAEL approach in deriving MRLs.

References

Barnes DG and Dourson M (1988). Reference Dose (RfD): Description and Use in Health Risk Assessments. Regulatory Toxicology and Pharmacology 8:471–486.

EPA (1986). Research and Development: Reference Values for Risk Assessment. (ECAO–CIN–477 September 1986).

EPA (1988). Recommendations for and Documentation of Biological Values for Use in Risk Assessment. (EPA 600–6–87/008 February 1988).

EPA (1990). Interim Methods for Development of Inhalation Reference Concentrations. (EPA/600/8–90/066A August 1990).

Jarabek AM and Segal SA. (1994). Noncancer Toxicity of Inhaled Air Pollutants: Available Approaches for Risk Assessment and Risk Management. In: Patrick DR, ed. Toxic Air Pollution Handbook. New York: Van Nostrand Reinhold, pp. 529–541.

Dated: May 17, 1996.

Claire V. Broome,

Deputy Administrator, Agency for Toxic Substances and Disease Registry.

ATSDR MINIMAL RISK LEVELS (MRLS) FOR HAZARDOUS SUBSTANCES

[March 1996]

Substance name	CAS No.	Route	Duration	Value	Factors	End point
ACENAPHTHENE	000083–32–9	ORAL	INTERMEDIATE	0.6 mg/kg/day	300	Hepatic.
ACETONE	000067–64–1	INHALATION	ACUTE	26 ppm	9	Neurological.
		INHALATION	INTERMEDIATE	13 ppm	100	Neurological.
		INHALATION	CHRONIC	13 ppm	100	Neurological.
		ORAL	INTERMEDIATE	2 mg/kg/day	100	Hematological.
ACROLEIN	000107–02–8	INHALATION	ACUTE	0.00005 ppm	100	Ocular.
		INHALATION	INTERMEDIATE	0.000009 ppm	1000	Respiratory.

ATSDR MINIMAL RISK LEVELS (MRLS) FOR HAZARDOUS SUBSTANCES—Continued

[March 1996]

Substance name	CAS No.	Route	Duration	Value	Factors	End point
		ORAL	CHRONIC	0.0005 mg/kg/day	100	Hematological.
ACRYLONITRILE	000107–13–1	INHALATION	ACUTE	0.1 ppm	10	Neurological.
		ORAL	ACUTE	0.1 mg/kg/day	100	Developmental.
		ORAL	INTERMEDIATE	0.01 mg/kg/day	1000	Reproductive.
		ORAL	CHRONIC	0.04 mg/kg/day	100	Hematological.
ALDRIN	000309–00–2	ORAL	ACUTE	0.002 mg/kg/day	1000	Developmental.
		ORAL	CHRONIC	0.00003 mg/kg/day	1000	Hepatic.
AMMONIA	007664–41–7	INHALATION	ACUTE	0.5 ppm	100	Respiratory.
		INHALATION	CHRONIC	0.3 ppm	10	Respiratory.
		ORAL	INTERMEDIATE	0.3 mg/kg/day	100	Other.
ANTHRACENE	000120–12–7	ORAL	INTERMEDIATE	10 mg/kg/day	100	Hepatic.
ARSENIC	007440–38–2	ORAL	CHRONIC	0.0003 mg/kg/day	3	Dermal.
BENZENE	000071–43–2	INHALATION	ACUTE	0.05 ppm	300	Immunological.
BIS (2-CHLORO-ETHYL) ETHER.	000111–44–4	INHALATION	INTERMEDIATE	0.02 ppm	1000	Body Weight.
BIS (CHLOROMETHYL) ETHER.	000542–88–1	INHALATION	INTERMEDIATE	0.0003 ppm	100	Respiratory.
BORON	007440–42–8	ORAL	INTERMEDIATE	0.01 mg/kg/day	1000	Developmental.
BROMODICHLOROME-THANE.	000075–27–4	ORAL	ACUTE	0.04 mg/kg/day	1000	Hepatic.
		ORAL	CHRONIC	0.02 mg/kg/day	1000	Renal/Urinary
BROMOFORM	000075–25–2	ORAL	ACUTE	0.6 mg/kg/day	100	Neurological.
		ORAL	CHRONIC	0.2 mg/kg/day	100	Hepatic.
BROMOMETHANE	000074–83–9	INHALATION	ACUTE	0.05 ppm	100	Neurological.
		INHALATION	INTERMEDIATE	0.05 ppm	100	Neurological.
		INHALATION	CHRONIC	0.005 ppm	100	Neurological.
		ORAL	INTERMEDIATE	0.003 mg/kg/day	100	Gastrointestinal.
CADMIUM	007440–43–9	INHALATION	CHRONIC	0.0002 mg/m^3	10	Renal/Urinary.
		ORAL	CHRONIC	0.0007 mg/kg/day	3	Renal/Urinary.
CARBON DISULFIDE	000075–15–0	INHALATION	CHRONIC	0.3 ppm	30	Neurological.
		ORAL	ACUTE	0.01 mg/kg/day	300	Hepatic.
CARBON TETRA-CHLORIDE.	000056–23–5	INHALATION	ACUTE	0.2 ppm	300	Hepatic.
		INHALATION	INTERMEDIATE	0.05 ppm	100	Hepatic.
		ORAL	ACUTE	0.02 mg/kg/day	300	Hepatic.
		ORAL	INTERMEDIATE	0.007 mg/kg/day	100	Hepatic.
CHLORDANE	000057–74–9	INHALATION	INTERMEDIATE	0.0002 mg/m^3	100	Hepatic.
		INHALATION	CHRONIC	0.00002 mg/m^3	1000	Hepatic.
		ORAL	ACUTE	0.001 mg/kg/day	1000	Developmental.
		ORAL	INTERMEDIATE	0.0006 mg/kg/day	100	Hepatic.
		ORAL	CHRONIC	0.0006 mg/kg/day	100	Hepatic.
CHLORFENVINPHOS	000470–90–6	ORAL	ACUTE	0.002 mg/kg/day	1000	Neurological.
		ORAL	INTERMEDIATE	0.002 mg/kg/day	1000	Lymphoreticular.
		ORAL	CHRONIC	0.0007 mg/kg/day	1000	Neurological.
CHLOROBENZENE	000108–90–7	ORAL	INTERMEDIATE	0.4 mg/kg/day	100	Hepatic.
CHLORODIBROMO-METHANE.	000124–48–1	ORAL	ACUTE	0.04 mg/kg/day	1000	Renal/Urinary.
		ORAL	CHRONIC	0.03 mg/kg/day	1000	Hepatic.
CHLOROETHANE	000075–00–3	INHALATION	ACUTE	1300 ppm	10	Neurological.
		INHALATION	INTERMEDIATE	76 ppm	100	Body Weight.
CHLOROFORM	000067–66–3	INHALATION	ACUTE	1 ppm	30	Hepatic.
		INHALATION	INTERMEDIATE	0.05 ppm	100	Hepatic.
		INHALATION	CHRONIC	0.02 ppm	100	Hepatic
		ORAL	ACUTE	0.3 mg/kg/day	100	Hepatic.
		ORAL	INTERMEDIATE	0.1 mg/kg/day	100	Hepatic.
		ORAL	CHRONIC	0.01 mg/kg/day	1000	Hepatic.
CHLOROMETHANE	000074–87–3	INHALATION	ACUTE	0.5 ppm	100	Neurological.
		INHALATION	INTERMEDIATE	0.4 ppm	100	Body Weight.
		INHALATION	CHRONIC	0.4 ppm	100	Body Weight.
CHLORPYRIFOS	002921–88–2	ORAL	ACUTE	0.003 mg/kg/day	10	Neurological.
		ORAL	INTERMEDIATE	0.003 mg/kg/day	10	Neurological.
CHROMIUM, HEXAVALENT.	018540–29–9	INHALATION	INTERMEDIATE	0.00002 mg/m^3	10	Respiratory.
		INHALATION	CHRONIC	0.00002 mg/m^3	10	Respiratory.
COBALT	007440–48–4	INHALATION	INTERMEDIATE	0.00003 mg/m^3	1000	Respiratory.
CRESOL, META-	000108–39–4	ORAL	ACUTE	0.05 mg/kg/day	100	Respiratory.
CRESOL, ORTHO-	000095–48–7	ORAL	ACUTE	0.05 mg/kg/day	100	Neurological.
CRESOL, PARA-	000106–44–5	ORAL	ACUTE	0.05 mg/kg/day	100	Neurological.
CYANIDE	000057–12–5	ORAL	INTERMEDIATE	0.05 mg/kg/day	100	Reproductive.

ATSDR MINIMAL RISK LEVELS (MRLS) FOR HAZARDOUS SUBSTANCES—Continued

[March 1996]

Substance name	CAS No.	Route	Duration	Value	Factors	End point
CYCLOTETRAMETHYLENE TETRANITRAMINE.	002691–41–0	ORAL	ACUTE	0.1 mg/kg/day	1000	Neurological.
		ORAL	INTERMEDIATE	0.05 mg/kg/day	1000	Hepatic.
CYCLOTRIMETHYLENETRINITRAMINE (RDX).	000121–82–4	ORAL	ACUTE	0.06 mg/kg/day	100	Neurological.
		ORAL	INTERMEDIATE	0.03 mg/kg/day	300	Reproductive.
DDT, P,P′-	000050–29–3	ORAL	ACUTE	0.0005 mg/kg/day	1000	Developmental.
		ORAL	INTERMEDIATE	0.0005 mg/kg/day	100	Hepatic.
DI(2-ETHYLHEXYL) PHTHALATE.	000117–81–7	ORAL	ACUTE	1 mg/kg/day	100	Reproductive.
		ORAL	INTERMEDIATE	0.4 mg/kg/day	100	Developmental.
DI-N-BUTYL PHTHALATE.	000084–74–2	ORAL	INTERMEDIATE	0.6 mg/kg/day	100	Developmental .
DI-N-OCTYL PHTHALATE.	000117–84–0	ORAL	ACUTE	2 mg/kg/day	1000	Hepatic.
DIAZINON	000333–41–5	ORAL	INTERMEDIATE	0.0002 mg/kg/day	1000	Developmental.
DICHLORVOS	000062–73–7	INHALATION	ACUTE	0.002 ppm	100	Neurological.
		INHALATION	INTERMEDIATE	0.0003 ppm	100	Neurological.
		INHALATION	CHRONIC	0.00006 ppm	100	Neurological.
		ORAL	ACUTE	0.004 mg/kg/day	1000	Neurological.
		ORAL	INTERMEDIATE	0.003 mg/kg/day	10	Neurological.
DIELDRIN	000060–57–1	ORAL	ACUTE	0.00007 mg/kg/day	1000	Immunological.
		ORAL	CHRONIC	0.00005 mg/kg/day	100	Hepatic.
DIETHYL PHTHALATE	000084–66–2	ORAL	ACUTE	7 mg/kg/day	300	Reproductive.
		ORAL	INTERMEDIATE	6 mg/kg/day	300	Hepatic.
DISULFOTON	000298–04–4	INHALATION	ACUTE	0.006 mg/m^3	30	Neurological.
		INHALATION	INTERMEDIATE	2E–4 mg/m^3	30	Neurological.
		ORAL	ACUTE	0.001 mg/kg/day	100	Neurological.
		ORAL	INTERMEDIATE	9E–5 mg/kg/day	100	Developmental.
		ORAL	CHRONIC	6E–5 mg/kg/day	1000	Neurological.
ENDOSULFAN	000115–29–7	ORAL	INTERMEDIATE	0.002 mg/kg/day	100	Immunological.
		ORAL	CHRONIC	0.002 mg/kg/day	100	Hepatic.
ENDRIN	000072–20–8	ORAL	INTERMEDIATE	0.002 mg/kg/day	100	Neurological.
		ORAL	CHRONIC	0.0003 mg/kg/day	100	Neurological.
EHTYL BENZENE	000100–41–4	INHALATION	INTERMEDIATE	0.3 ppm	100	Developmental.
ETHYLENE GLYCOL	000107–21–1	ORAL	CHRONIC	2 mg/kg/day	100	Renal/Urinary.
ETHYLENE OXIDE	000075–21–8	INHALATION	INTERMEDIATE	0.09 ppm	100	Renal/Urinary.
FLUORANTHENE	000206–44–0	ORAL	INTERMEDIATE	0.4 mg/kg/day	300	Hepatic.
FLUORENE	000086–73–7	ORAL	INTERMEDIATE	0.4 mg/kg/day	300	Hepatic.
FUEL OIL NO. 2	068476–30–2	INHALATION	ACUTE	0.02 mg/m^3	1000	Neurological.
HEXACHLOROBENZENE.	000118–74–1	ORAL	ACUTE	0.008 mg/kg/day	300	Developmental.
		ORAL	INTERMEDIATE	0.0003 mg/kg/day	300	Reproductive.
		ORAL	CHRONIC	0.00002 mg/kg/day	1000	Developmental.
HEXACHLOROBUTADIENE.	000087–68–3	ORAL	INTERMEDIATE	0.0002 mg/kg/day	1000	Renal/Urinary.
HEXACHLOROCYCLOHEXANE, BETA-.	000319–85–7	ORAL	INTERMEDIATE	0.0003 mg/kg/day	300	Hepatic.
HEXACHLOROCYCLOHEXANE, GAMMA-.	000058–89–9	ORAL	ACUTE	0.01 mg/kg/day	300	Neurological.
		ORAL	INTERMEDIATE	0.00004 mg/kg/day	300	Immunological.
HEXACHLOROETHANE	000067–72–1	INHALATION	ACUTE	0.5 ppm	100	Neurological.
		INHALATION	INTERMEDIATE	0.09 ppm	100	Respiratory.
		ORAL	ACUTE	1 mg/kg/day	100	Hepatic.
		ORAL	INTERMEDIATE	0.01 mg/kg/day	100	Hepatic.
HYDRAZINE	000302–01–2	INHALATION	INTERMEDIATE	0.0002 ppm	1000	Hepatic.
ISOPHORONE	000078–59–1	ORAL	INTERMEDIATE	3 mg/kg/day	100	Other.
		ORAL	CHRONIC	0.2 mg/kg/day	1000	Hepatic.
JP–4 JET FUEL	050815–00–4	INHALATION	INTERMEDIATE	9 mg/m^3	300	Hepatic.
JP–7 JET FUEL	HZ0600–22–T	INHALATION	CHRONIC	0.3 mg/m^3	300	Hepatic.
KEPONE	000143–50–0	ORAL	ACUTE	0.01 mg/kg/day	100	Neurological.
		ORAL	INTERMEDIATE	0.0005 mg/kg/day	100	Renal/Urinary.
		ORAL	CHRONIC	0.0005 mg/kg/day	100	Renal/Urinary.
KEROSENE	008008–20–6	INHALATION	INTERMEDIATE	0.01 mg/m^3	1000	Hepatic.
M–XYLENE	000108–38–3	ORAL	INTERMEDIATE	0.6 mg/kg/day	1000	Hepatic.
MANGANESE	007439–96–5	INHALATION	CHRONIC	0.0003 mg/m^3	100	Neurological.
MERCURY, INORGANIC	HZ0900–19–T	ORAL	ACUTE	0.007 mg/kg/day	100	Renal/Urinary.
		ORAL	INTERMEDIATE	0.002 mg/kg/day	100	Renal/Urinary.
MERCURY, METALLIC	007439–97–6	INHALATION	ACUTE	0.00002 mg/m^3	100	Developmental.

ATSDR MINIMAL RISK LEVELS (MRLS) FOR HAZARDOUS SUBSTANCES—Continued

[March 1996]

Substance name	CAS No.	Route	Duration	Value	Factors	End point
		INHALATION	CHRONIC	0.000014 mg/m³	100	Neurological.
METHOXYCHLOR	000072–43–5	ORAL	ACUTE	0.02 mg/kg/day	1000	Reproductive.
		ORAL	INTERMEDIATE	0.02 mg/kg/day	1000	Reproductive.
METHYL PARATHION	000298–00–0	ORAL	CHRONIC	0.0003 mg/kg/day	100	Neurological.
METHYL-T-BUTYL ETHER.	001634–04–4	INHALATION	ACUTE	2 ppm	100	Neuorlogical.
		INHALATION	INTERMEDIATE	0.7 ppm	100	Neurological.
		INHALATION	CHRONIC	0.7 ppm	100	Renal/Urinary.
		ORAL	ACUTE	0.4 mg/kg/day	100	Neurological.
		ORAL	INTERMEDIATE	0.3 mg/kg/day	300	Hepatic.
METHYLENE CHLORIDE.	000075–09–2	INHALATION	ACUTE	0.4 ppm	100	Neurological.
		INHALATION	INTERMEDIATE	0.03 ppm	1000	Hepatic.
		ORAL	CHRONIC	0.06 mg/kg/day	100	Hepatic.
METHYLMERCURIC CHLORIDE.	000115–09–3	ORAL	ACUTE	0.00012 mg/kg/day	10	Developmental.
		ORAL	INTERMEDIATE	0.00012 mg/kg/day	10	Developmental.
MIREX	002385–85–5	ORAL	CHRONIC	0.0008 mg/kg/day	100	Hepatic.
N-NITROSODI-N-PROPYLAMINE.	000621–64–7	ORAL	ACUTE	0.095 mg/kg/day	100	Hepatic.
NAPHTHALENE	000091–20–3	INHALATION	CHRONIC	0.002 ppm	1000	Respiratory.
		ORAL	ACUTE	0.05 mg/kg/day	1000	Neurological.
		ORAL	INTERMEDIATE	0.02 mg/kg/day	300	Hepatic.
NICKEL	007440–02–0	INHALATION	INTERMEDIATE	0.00004 mg/m³	100	Respiratory
P-XYLENE	000106–42–3	ORAL	ACUTE	1 mg/kg/day	100	Neurological.
PENTACHLOROPHENOL.	000087–86–5	ORAL	ACUTE	0.005 mg/kg/day	1000	Developmental.
		ORAL	INTERMEDIATE	0.001 mg/kg/day	1000	Hepatic.
PHENOL	000108–95–2	ORAL	ACUTE	0.6 mg/kg/day	100	Developmental.
POLYBROMINATED BIPHENYLS.	067774–32–7	ORAL	ACUTE	0.01 mg/kg/day	100	Endocrine.
POLYCHLORINATED BIPHENYLS.	001336–36–3	ORAL	CHRONIC	0.00002 mg/kg/day	300	Immunological.
PROPYLENE GLYCOL DINITRATE.	006423–43–4	INHALATION	ACUTE	0.003 ppm	10	Neurological.
		INHALATION	INTERMEDIATE	0.00004 ppm	1000	Hematological.
		INHALATION	CHRONIC	0.00004 ppm	1000	Hematological.
SELENIUM	007782–49–2	ORAL	CHRONIC	0.002 mg/kg/day	10	Dermal.
SODIUM FLUORIDE	007681–49–4	ORAL	CHRONIC	0.05 mg/kg/day	10	Musculoskeletal.
STYRENE	000100–42–5	INHALATION	CHRONIC	0.06 ppm	100	Neurological.
		ORAL	INTERMEDIATE	0.2 mg/kg/day	1000	Hepatic.
TETRACHLOROETHYLENE.	000127–18–4	INHALATION	ACUTE	0.2 ppm	10	Neurological.
		INHALATION	CHRONIC	0.04 ppm	100	Neurological.
		ORAL	ACUTE	0.05 mg/kg/day	1000	Developmental.
TITANIUM TETRACHLORIDE.	007550–45–0	INHALATION	CHRONIC	0.001 mg/m³	90	Respiratory.
TOLUENE	000108–88–3	INHALATION	ACUTE	3 ppm	30	Neurological.
		INHALATION	CHRONIC	1 ppm	30	Neurological.
		ORAL	ACUTE	0.8 mg/kg/day	300	Neurological.
		ORAL	INTERMEDIATE	0.02 mg/kg/day	300	Neurological.
TOTAL XYLENES	001330–20–7	INHALATION	ACUTE	1 ppm	100	Neurological.
		INHALATION	INTERMEDIATE	0.7 ppm	300	Developmental.
		INHALATION	CHRONIC	0.1 ppm	100	Neurological.
		ORAL	INTERMEDIATE	0.2 mg/kg/day	1000	Renal/Urinary.
TOXAPHENE	008001–35–2	ORAL	ACUTE	0.005 mg/kg/day	1000	Hepatic.
		ORAL	INTERMEDIATE	0.001 mg/kg/day	100	Hepatic.
TRICHLOROETHYLENE	000079–01–6	INHALATION	ACUTE	2 ppm	30	Neurological.
		INHALATION	INTERMEDIATE	0.1 ppm	300	Neurological.
		ORAL	ACUTE	0.5 mg/kg/day	100	Developmental.
		ORAL	INTERMEDIATE	0.002 mg/kg/day	100	Developmental.
VANADIUM	007440–62–2	INHALATION	ACUTE	0.0002 mg/m³	100	Respiratory.
		ORAL	INTERMEDIATE	0.003 mg/kg/day	100	Renal/Urinary.
VINYL ACETATE	000108–05–4	INHALATION	INTERMEDIATE	0.01 ppm	100	Respiratory.
VINYL CHLORIDE	000075–01–4	INHALATION	ACUTE	0.5ppm	100	Developmental.
		INHALATION	INTERMEDIATE	0.03 ppm	300	Hepatic.
		ORAL	CHRONIC	0.00002 mg/kg/day	1000	Hepatic.
ZINC	007440–66–6	ORAL	INTERMEDIATE	0.3 mg/kg/day	3	Hematological.
		ORAL	CHRONIC	0.3 mg/kg/day	3	Hematological.
1,1,1-TRICHLOROETHANE.	000071–55–6	INHALATION	ACUTE	2 ppm	100	Neurological.

ATSDR MINIMAL RISK LEVELS (MRLS) FOR HAZARDOUS SUBSTANCES—Continued

[March 1996]

Substance name	CAS No.	Route	Duration	Value	Factors	End point
		INHALATION	INTERMEDIATE	0.7 ppm	100	Neurological.
1,1,2,2-TETRA-CHLOROETHANE.	000079–34–5	INHALATION	ACUTE	1 ppm	10	Neurological.
		INHALATION	INTERMEDIATE	0.4 ppm	300	Hepatic.
		ORAL	ACUTE	0.3 mg/kg/day	100	Hepatic.
		ORAL	INTERMEDIATE	0.3 mg/kg/day	300	Body Weight.
		ORAL	CHRONIC	0.3 mg/kg/day	300	Body Weight.
1,1,2-TRICHLORO-ETH-ANE.	000079–00–5	ORAL	ACUTE	0.3 mg/kg/day	100	Neurological.
		ORAL	INTERMEDIATE	0.04 mg/kg/day	100	Hepatic.
1,1-DICHLORO-ETHENE.	000075–35–4	INHALATION	INTERMEDIATE	0.02 ppm	100	Hepatic.
		ORAL	CHRONIC	0.009 mg/kg/day	1000	Hepatic.
1,1-DIMETHYLHYDRAZI-NE.	000057–14–7	INHALATION	INTERMEDIATE	0.000009 ppm	1000	Hepatic.
		INHALATION	CHRONIC	0.000009 ppm	1000	Hepatic.
1,2,3-TRICHLORO-PRO-PANE.	000096–18–4	INHALATION	ACUTE	0.0003 ppm	100	Respiratory.
		ORAL	INTERMEDIATE	0.06 mg/kg/day	100	Hepatic.
1,2-DIBROMO-3-CHLOROPROPANE.	000096–12–8	INHALATION	INTERMEDIATE	0.0002 ppm	100	Reproductive.
		ORAL	INTERMEDIATE	0.002 mg/kg/day	1000	Reproductive.
1,2-DICHLORO-ETH-ANE.	000107–06–2	INHALATION	ACUTE	0.2 ppm	100	Immunological.
		INHALATION	CHRONIC	0.2 ppm	300	Hepatic.
		ORAL	INTERMEDIATE	0.2 mg/kg/day	300	Renal/Urinary.
1,2-DICHLORO-ETHENE, CIS-.	000156–59–2	ORAL	ACUTE	1 mg/kg/day	100	Hematological.
		ORAL	INTERMEDIATE	0.3 mg/kg/day	100	Hematological.
1,2-DICHLORO-ETHENE, TRANS-.	000156–60–5	INHALATION	ACUTE	0.2 ppm	1000	Hepatic.
		INHALATION	INTERMEDIATE	0.2 ppm	1000	Hepatic.
		ORAL	INTERMEDIATE	0.2 mg/kg/day	100	Hepatic.
1,2-DICHLORO-PRO-PANE.	000078–87–5	INHALATION	ACUTE	0.05 ppm	1000	Respiratory.
		INHALATION	INTERMEDIATE	0.007 ppm	1000	Respiratory.
		ORAL	ACUTE	0.1 mg/kg/day	1000	Neurological.
		ORAL	INTERMEDIATE	0.07 mg/kg/day	1000	Hematological.
		ORAL	CHRONIC	0.09 mg/kg/day	1000	Hepatic.
1,2-DIMETHYL-HYDRA-ZINE.	000540–73–8	ORAL	INTERMEDIATE	0.0008 mg/kg/day	1000	Hepatic.
1,3-DICHLORO-PROPENE.	000542–75–6	INHALATION	INTERMEDIATE	0.003 ppm	100	Respiratory.
		INHALATION	CHRONIC	0.002 ppm	100	Respiratory.
1,3-DINITRO-BENZENE	000099–65–0	ORAL	ACUTE	0.008 mg/kg/day	100	Reproductive.
		ORAL	INTERMEDIATE	0.0005 mg/kg/day	1000	Hematological.
1,4-DICHLORO-BEN-ZENE.	000106–46–7	INHALATION	INTERMEDIATE	0.2 ppm	100	Hepatic.
		ORAL	INTERMEDIATE	0.1 mg/kg/day	100	Hepatic.
1-METHYLNAPHTHA-LENE.	000090–12–0	ORAL	CHRONIC	0.07 mg/kg/day	1000	Respiratory.
2,3,4,7,8-PENTACHLORODIBE-NZO-FURAN.	057117–31–4	ORAL	ACUTE	0.000001 mg/kg/day	3000	Immunological.
		ORAL	INTERMEDIATE	0.00000003 mg/kg/day.	3000	Hepatic.
2,3,7,8-TETRACHLORODIBE-NZO-P-DIOXIN.	001746–01–6	ORAL	ACUTE	0.0000001 mg/kg/day	1000	Hepatic.
		ORAL	INTERMEDIATE	0.000000001 mg/kg/day.	1000	Reproductive.
		ORAL	CHRONIC	0.000000001 mg/kg/day.	1000	Reproductive.
2,4,6-TRICHLORO-PHE-NOL.	000088–06–2	ORAL	INTERMEDIATE	0.04 mg/kg/day	100	Reproductive.
2,4,6-TRINITROTOL-UENE.	000118–96–7	ORAL	INTERMEDIATE	0.0005 mg/kg/day	1000	Hepatic.
2,4-DINITROPHENOL	000051–28–5	ORAL	ACUTE	0.01 mg/kg/day	100	Body Weight.
2,4-DINITROTOLUENE	000121–14–2	ORAL	ACUTE	0.06 mg/kg/day	1000	Hematological.
		ORAL	INTERMEDIATE	0.05 mg/kg/day	100	Reproductive.

ATSDR MINIMAL RISK LEVELS (MRLS) FOR HAZARDOUS SUBSTANCES—Continued

[March 1996]

Substance name	CAS No.	Route	Duration	Value	Factors	End point
		ORAL	CHRONIC	0.002 mg/kg/day	100	Hematological.
2,6-DINITROTOLUENE	000606–20–2	ORAL	INTERMEDIATE	0.04 mg/kg/day	100	Neurological.
4,4′-METHYLENE-BIS (2-CHLOROANILINE).	000101–14–4	ORAL	CHRONIC	0.003 mg/kg/day	3000	Hepatic.
4,6-DINITRO-O-CRESOL.	000534–52–1	ORAL	ACUTE	0.004 mg/kg/day	100	Neurological.
		ORAL	INTERMEDIATE	0.004 mg/kg/day	100	Neurological.

[FR Doc. 96–12991 Filed 5–22–96; 8:45 am]

BILLING CODE 1505–01–D

Centers for Disease Control and Prevention

[Announcement Number 662]

Applied Research in Emerging Infections—Controlling the Spread of Antimicrobial Resistance in Community-Acquired Bacterial Pathogens

Introduction

The Centers for Disease Control and Prevention (CDC) is implementing a program for competitive cooperative agreement and/or research project grant applications to support applied research on emerging infections. CDC announces the availability of fiscal year (FY) 1996 funds to provide assistance for a program to conduct research on controlling the spread of antimicrobial resistance among community-acquired bacterial pathogens.

The CDC is committed to achieving the health promotion and disease prevention objectives of Healthy People 2000, a national activity to reduce morbidity and mortality and improve the quality of life. This announcement is related to the priority area of Immunization and Infectious Diseases. (For ordering a copy of Healthy People 2000, see the section Where To Obtain Additional Information.)

Authority

This program is authorized under sections 301(a) and 317(k)(2) [42 U.S.C. 241(a) and 247b(k)(2)] of the Public Health Service Act, as amended.

Smoke-Free Workplace

CDC strongly encourages all grant recipients to provide a smoke-free workplace and to promote the nonuse of all tobacco products, and Public Law 103–227, the Pro-Children Act of 1994, prohibits smoking in certain facilities that receive Federal funds in which education, library, day care, health care, and early childhood development services are provided to children.

Eligible Applicants

Applications may be submitted by public and private, nonprofit and for-profit organizations and governments and their agencies. Thus, universities, colleges, research institutions, hospitals, other public and private organizations, including State and local governments or their bona fide agents, federally recognized Indian tribal governments, Indian tribes or Indian tribal organizations, and small, minority- and/or women-owned businesses are eligible to apply.

Availability of Funds

Approximately $250,000 is available in FY 1996 to fund one or two awards. It is expected that the awards will begin on or about September 30, 1996, and will be made for a 12-month budget period within a project period of up to two years. Funding estimates may vary and are subject to change. Continuation awards within an approved project period will be made on the basis of satisfactory progress and availability of funds.

Purpose

The purpose of the emerging infections extramural research program is to provide financial and technical assistance for applied research projects on emerging infections in the United States. As a component of this emerging infections extramural research program, this announcement focuses on controlling the spread of antimicrobial resistance among community-acquired bacterial respiratory pathogens.

Specifically, the purpose of this announcement is to provide assistance for the development and implementation of a program to promote judicious antimicrobial use in an outpatient population, and the evaluation of its impact on carriage or infection with community-acquired drug-resistant bacterial respiratory pathogens. If successful, such a project could serve as the scientific foundation for national efforts to change antibiotic use practices of physicians in order to decrease the spread of resistance.

Program Requirements

In conducting activities to achieve the purpose of this program, the recipient shall be responsible for the activities under A., below and CDC shall be responsible for conducting activities under B., below. In Recipient Activities below, the study of drug resistant S. pneumoniae, H. influenzae, or M. catarrhalis in a pediatric population are examples of an appropriate approach and are provided for illustration purposes. Applicants may propose studies which focus on other populations and/or pathogens which are appropriate under the Purpose section of this announcement.

A. Recipient Activities

1. Select study population. This may include selection of non-overlapping control and intervention groups of patients for participation. One example of an appropriate approach would be to enroll children from two groups of day care centers, from two small towns, or from two communities within a large metropolitan area. These groups of children would constitute discrete populations and be served by different medical care providers. They would be similar demographically, have similar utilization of medical care, and comparable baseline rates of carriage or infection with resistant pathogens.

2. Collect and analyze baseline data. For example, nasopharyngeal (NP) carriage rates for drug-resistant Streptococcus pneumoniae (DRSP) and/or β-lactamase producing Haemophilus influenzae or Moraxella catarrhalis could be measured in the two groups of children by separate NP swab surveys conducted several months before and immediately prior to the start of the intervention phase. NP surveys for the intervention and control groups would be done concurrently. Laboratory methods would include evaluating the potential for carriage of multiple populations of pneumococci, which

may have different resistance patterns, by analysis of multiple pneumococcal colonies per culture plate.

3. Design and implement an intervention promoting judicious antimicrobial use. Again, using a pediatric age population as an example, develop and implement an intensive program to reduce the rate of antibiotic use focusing on pediatric providers and the children's parents from one of the study groups. The control group would allow comparison of outcomes. Techniques with proven effectiveness, such as face-to-face discussions with ''peer-counselors,'' would be an important component of such an intervention. Educational materials for physicians, including written guidelines for diagnosis and management of common respiratory conditions established in collaboration with professional organizations, and materials to educate parents on the potential adverse effects of unnecessary antibiotic use would be made available from CDC. Materials may also be developed by the recipient for use in the intervention. Other techniques that may be applicable in some settings include providing feedback to physicians comparing their practices with those of their colleagues and providing incentives which promote judicious antimicrobial use.

4. Measure effect of the intervention. Measure the differences in the rate of antimicrobial resistance among isolates obtained from carriers or persons with infection in the intervention and control groups. Other appropriate measures or analyses could include: (a) differences between control and intervention groups in rates and types of antimicrobial use; (b) differences in carriage or infection with resistant bacterial pathogens among family members or the community in general; (c) differences in the rate of recurrent or refractory infections; and (d) changes in parent or provider knowledge and attitudes regarding antimicrobial use.

5. Disseminate research findings. Disseminate research results by appropriate methods such as publication in journals, presentation at meetings, conferences, etc.

B. CDC Activities

1. Research Project Grants. A research project grant is one in which substantial programmatic involvement by CDC is not anticipated by the recipient during the project period. Applicants for grants must demonstrate an ability to conduct the proposed research with minimal assistance, other than financial support, from CDC. This would include documenting that applicant has sufficient resources for clinical, laboratory, and data management services, and for demonstrating a level of scientific expertise to achieve the objectives described in the research proposal without substantial technical assistance from CDC.

2. Cooperative Agreements. In a cooperative agreement, CDC will assist recipients in conducting the proposed research. The application should be presented in a manner that demonstrates the applicant's ability to address the research problem in a collaborative manner with CDC. In addition to the financial support provided, CDC will collaborate by: (1) Providing technical assistance in the design and conduct of the research including intervention methods and analytic approach; (2) performing selected laboratory tests as appropriate; and (3) participating in data management, the analysis of research data, and the interpretation and presentation of research findings.

C. Determination of Which Instrument To Use

Applicants must specify the type of award for which they are applying, either grant or cooperative agreement. CDC will review the applications in accordance with the Evaluation Criteria section of this announcement. Before issuing awards, CDC will determine whether a grant or cooperative agreement is the appropriate instrument based upon the need for substantial CDC involvement in the project.

Notice of Intent To Apply

In order to assist CDC in planning for and executing the evaluation of applications submitted under this announcement, all parties intending to submit an application are requested to inform CDC of their intention to do so at their earliest convenience prior to the application due date. Notification should include: (1) Name and address of institution, and (2) name, address, and phone number of contact person. Notification should be provided by facsimile, postal mail, or E-mail to Greg Jones, M.P.A., National Center for Infectious Diseases, 1600 Clifton Road, NE., Mailstop C–19, Atlanta, Georgia 30333, E-mail gjj1@cidod1.em.cdc.gov, facsimile (404) 639–4195.

Evaluation Criteria

The applications will be reviewed and evaluated according to the following criteria:

1. Background and Need (15 points). Extent to which applicant's discussion of the background for the proposed project demonstrates a clear understanding of the purpose and objectives of this grant/cooperative agreement program. Extent to which applicant illustrates and justifies the need for the proposed project that is consistent with the purpose and objectives of this program.

2. Capacity (35 points total):

a. Extent to which applicant describes adequate resources and facilities (both technical and administrative) for conducting the project. (10 points)

b. Extent to which applicant documents that professional personnel involved in the project are qualified and have past experience and achievements in research related to that proposed as evidenced by curriculum vitae, publications, etc. (20 points)

c. Extent to which applicant includes letters of support from non-applicant organizations, individuals, etc. Extent to which the letters clearly indicate the author's commitment to participate as described in the operational plan. (5 points)

3. Objectives and Technical Approach (50 points total):

a. Extent to which applicant describes specific objectives of the proposed project which are consistent with the purpose and goals of this program and which are measurable and time-phased. (10 points)

b. Extent to which applicant presents a detailed operational plan for initiating and conducting the project, which clearly and appropriately addresses all Recipient Activities. Extent to which applicant clearly identifies specific assigned responsibilities for all key professional personnel. Extent to which the plan clearly describes applicant's technical approach/methods for conducting the proposed studies and extent to which the plan is adequate to accomplish the study objectives. Extent to which applicant describes specific study protocols or plans for the development of study protocols that are appropriate for achieving project objectives. The degree to which the applicant has met the CDC Policy requirements regarding the inclusion of women, ethnic, and racial groups in the proposed research. This includes: (1) The proposed plan for the inclusion of both sexes and racial and ethnic minority populations for appropriate representation; (2) the proposed justification when representation is limited or absent; (3) a statement as to whether the design of the study is adequate to measure differences when warranted; and (4) a statement as to whether the plans for recruitment and outreach for study participants include the process of establishing partnerships

with community(ies) and recognition of mutual benefits. (20 points)

c. Extent to which applicant describes adequate and appropriate collaboration with CDC and/or others during various phases of the project. (10 points)

d. Extent to which applicant provides a detailed and adequate plan for evaluating study results and for evaluating progress toward achieving project objectives. If the proposed project involves notifiable conditions, the degree to which applicant describes an adequate process for providing necessary information to appropriate State and/or local health departments. (10 points)

4. Budget (not scored): Extent to which the proposed budget is reasonable, clearly justifiable, and consistent with the intended use of grant/cooperative agreement funds.

5. Human Subjects (not scored): If the proposed project involves human subjects, whether or not exempt from the DHHS regulations, the extent to which adequate procedures are described for the protection of human subjects. Note: Objective Review Group (ORG) recommendations on the adequacy of protections include: (1) Protections appear adequate and there are no comments to make or concerns to raise, or (2) protections appear adequate, but there are comments regarding the protocol, or (3) protections appear inadequate and the ORG has concerns related to human subjects, or (4) disapproval of the application is recommended because the research risks are sufficiently serious and protection against the risks are inadequate as to make the entire application unacceptable.

Executive Order 12372 Review

This program is not subject to Executive Order 12372 Review, Intergovernmental Review of Federal Programs.

Public Health System Reporting Requirements

This program is not subject to the Public Health System Reporting Requirements.

Catalog of Federal Domestic Assistance Number

The Catalog of Federal Domestic Assistance Number is 93.283.

Other Requirements

Paperwork Reduction Act

Projects that involve the collection of information from ten or more individuals and funded by the grant/cooperative agreement will be subject to review by the Office of Management and Budget (OMB) under the Paperwork Reduction Act.

Human Subjects

If the proposed project involves research on human subjects, the applicant must comply with the Department of Health and Human Services Regulations (45 CFR Part 46) regarding the protection of human subjects. Assurance must be provided to demonstrate that the project will be subject to initial and continuing review by an appropriate institutional review committee. The applicant will be responsible for providing evidence of this assurance in accordance with the appropriate guidelines and form provided in the application kit.

Women, Racial and Ethnic Minorities

It is the policy of the Centers for Disease Control and Prevention (CDC) and the Agency for Toxic Substances and Disease Registry (ATSDR) to ensure that individuals of both sexes and the various racial and ethnic groups will be included in CDC/ATSDR- supported research projects involving human subjects, whenever feasible and appropriate. Racial and ethnic groups are those defined in OMB Directive No. 15 and include American Indian, Alaskan Native, Asian, Pacific Islander, Black and Hispanic. Applicants shall ensure that women, racial and ethnic minority populations are appropriately represented in applications for research involving human subjects. Where clear and compelling rationale exist that inclusion is inappropriate or not feasible, this situation must be explained as part of the application. This policy does not apply to research studies when the investigator cannot control the race, ethnicity and/or sex of subjects. Further guidance to this policy is contained in the Federal Register, Vol. 60, No. 179, pages 47947–47951, dated Friday, September 15, 1995.

Application Submission and Deadline

The original and two copies of each application PHS Form 5161–1 (Revised 7/92, OMB Control Number 0937–0189) must be submitted to Sharron P. Orum, Grants Management Officer, Grants Management Branch, Procurement and Grants Office, Centers for Disease Control and Prevention (CDC), 255 East Paces Ferry Road, NE., Room 314, Mailstop E–18, Atlanta, GA 30305, on or before August 6, 1996.

1. *Deadline*: Applications shall be considered as meeting the deadline if they are either:

a. Received on or before the deadline date; or

b. Sent on or before the deadline date and received in time for submission to the objective review group. (Applicants must request a legibly dated U.S. Postal Service postmark or obtain a legibly dated receipt from a commercial carrier or U.S. Postal Service. Private metered postmarks shall not be acceptable as proof of timely mailing.)

2. *Late Applications*: Applications which do not meet the criteria in 1. a. or 1. b. above are considered late applications. Late applications will not be considered in the current competition and will be returned to the applicant.

Where To Obtain Additional Information

A complete program description and information on application procedures are contained in the application package. An application package and business management and technical assistance may be obtained from Marsha Driggans, Grants Management Specialist, Grants Management Branch, Procurement and Grants Office, Centers for Disease Control and Prevention (CDC), 255 East Paces Ferry Road, NE., Mailstop E–18, Room 300, Atlanta, GA 30305, telephone (404) 842–6523, E-mail address mdd2@opspgo1.em.cdc.gov, facsimile (404) 842–6513.

Programmatic technical assistance may be obtained from Dr. Benjamin Schwartz, Division of Bacterial and Mycotic Diseases, National Center for Infectious Diseases, Centers for Disease Control and Prevention (CDC), 1600 Clifton Road, NE., Mailstop C–09, Atlanta, GA 30333, telephone (404) 639–4747, E-mail address bxs1@ciddbd1.em.cdc.gov.

Important Notice: Atlanta, GA, will be the host of the 1996 Summer Olympics Games, July 19 through August 4, 1996. As a result of this event, it is likely that the Procurement and Grants Office (PGO), CDC, may experience delays in the receipt of both regular and overnight mail deliveries. Contacting PGO employees during this time frame may also be hindered due to the possible telephone disruptions. To the extent authorized, please consider the use of voice mail, E-mail, and facsimile transmission to the maximum extent practicable. However, do not fax lengthy documents or grant applications.

You may obtain this announcement from one of two Internet sites on the actual publication date: CDC's homepage at http://www.cdc.gov or at the Government Printing Office homepage (including free on-line access to the Federal Register at http://www.access.gpo.gov).

Please refer to Announcement Number 662 when requesting information regarding this program.

Potential applicants may obtain a copy of Healthy People 2000 (Full Report, Stock No. 017–001–00474–0) or Healthy People 2000 (Summary Report, Stock No. 017–001–00473–1) referenced in the Introduction through the Superintendent of Documents, Government Printing Office, Washington, DC 20402–9325, telephone (202) 512- 1800.

Dated: June 21, 1996.

Joseph R. Carter,

Acting Associate Director for Management and Operations, Centers for Disease Control and Prevention (CDC).

[FR Doc. 96–16388 Filed 6–26–96; 8:45 am]

BILLING CODE 4163–18–P

[Announcement Number 644]

Ecology of the Deer Mouse (Peromyscus maniculatus) in Peridomestic Settings

Introduction

The Centers for Disease Control and Prevention (CDC) announces the availability of fiscal year (FY) 1996 funds for a cooperative agreement program to provide assistance for studies on the behavior, movement, reproductive biology, population structure, and relative infection status of deer mice (Peromyscus maniculatus) and deer-mouse populations inhabiting peridomestic environments.

CDC is committed to achieving the health promotion and disease prevention objectives of Healthy People 2000, a national activity to reduce morbidity and mortality and improve the quality of life. This announcement is related to the priority area of Immunization and Infectious Diseases. (For ordering a copy of Healthy People 2000, see the section —Where To Obtain Additional Information.—)

Authority

This program is authorized under sections 301(a) and 317(k)(2) [42 U.S.C. 241(a) and 247b(k)(2)] of the Public Health Service Act, as amended. Applicable program regulations are found in 42 CFR Part 52, Grants for Research Projects.

Smoke-Free Workplace

CDC strongly encourages all grant recipients to provide a smoke-free workplace and to promote the non-use of all tobacco products, and Public Law 103–227, the Pro-Children's Act of 1994, prohibits smoking in certain facilities that receive Federal funds in which education, library, day-care, health care and early childhood development services are provided to children.

Eligible Applicants

Applications may be submitted by public and private, nonprofit and for-profit organizations and governments and their agencies. Thus, universities, colleges, research institutions, hospitals, other public and private organizations, State and local governments or their bona fide agents, federally recognized Indian tribal governments, Indian tribes or Indian tribal organizations, and small, minority- and/or women-owned businesses are eligible to apply.

Availability of Funds

Approximately $150,000 is available in FY 1996 to fund one award. It is expected that the award will begin on or about September 30, 1996, and will be made for a 12-month budget period within a project period of up to 3 years. Funding estimates may vary and are subject to change. Continuation awards within an approved project period will be made on the basis of satisfactory progress and availability of funds.

Purpose

The purpose of this cooperative agreement is to assist the recipient in gaining knowledge about the behavior, movement, reproductive biology, population structure, and relative infection status of deer mice and deer-mouse populations inhabiting peridomestic environments. This knowledge will lead to improved assessment of the risk of hantaviral infection in peridomestic environments and more effective reservoir control and risk reduction. Because the major reservoir of Sin Nombre virus (SNV) in the western United States has been the deer mouse, the initial studies should concentrate on the ecology of this species. However, as more information about North American hantaviruses and their rodent hosts becomes available, additional studies of other virus/rodent pairings may be appropriate.

Program Requirements

In conducting activities to achieve the purpose of this program, the recipient will be responsible for the activities under A. below, and CDC will be responsible for conducting activities under B. below:

A. Recipient Activities

1. Locate an area containing a variety of structures (occupied, unoccupied, or seasonally occupied; houses, trailers, and outbuildings; heated and non-heated) where SNV infected deer mice are known to occur.

2. Use standard ecological and virological methods to monitor the dynamics of deer mouse populations and the dynamics of viral infection within host populations. Ecological techniques should include mark-recapture and/or radio telemetry studies. Virological techniques should be CDC approved and should include serology (on periodic blood samples taken from marked animals); methods may also include antigen-capture enzyme immunoassay and polymerase chain reaction for virus detection.

3. Studies similar to those outlined in #2 above with other virus/rodent relationships may be appropriate and should be considered as more information about North American hantaviruses and their rodent hosts becomes available.

4. Analyze and publish study results.

B. CDC Activities

1. Provide consultation and scientific and technical assistance to the recipient.

2. In collaboration with recipient, analyze study results.

Evaluation Criteria

Applications will be reviewed and evaluated according to the following criteria:

A. Background and Need

Extent to which applicant demonstrates a clear understanding of the purpose and objectives of this proposed cooperative agreement. Extent to which applicant demonstrates a clear understanding of the requirements, responsibilities, interactions, problems, constraints, complexities, etc., that may be encountered in conducting the project and performing the studies. (30 points)

B. Capacity

Extent to which applicant describes adequate resources and facilities (both technical and administrative) for conducting the project including appropriate laboratory facilities. Extent to which applicant documents that professional personnel involved in the project are qualified and have past experience and achievements in research related to that proposed in this cooperative agreement as evidenced by curriculum vitae, publications, etc. (35 points)

C. Objectives and Technical Approach

Extent to which applicant describes objectives of the proposed project which are consistent with the purpose and program requirements of this

cooperative agreement and which are measurable and time-phased. Extent to which applicant presents a detailed plan for initiating and conducting the project which clearly and appropriately addresses all ''Recipient Activities.'' Extent to which the plan clearly describes applicant's technical approach/methods for conducting the proposed studies. Extent to which applicant describes specific study protocols or plans for the development of study protocols that are appropriate for achieving project objectives. Extent to which applicant describes adequate collaboration with CDC during various phases of the project. Extent to which applicant provides a detailed plan for evaluating study results and for evaluating progress towards achieving project objectives. (35 points)

D. Budget

Extent to which the proposed budget is reasonable, clearly justifiable, and consistent with the intended use of cooperative agreement funds. (Not Scored)

Executive Order 12372 Review

This program is not subject to Executive Order 12372.

Public Health System Reporting Requirements

This program is subject to the Public Health System Reporting Requirements. Under these requirements, all community-based nongovernmental applicants must prepare and submit the items identified below to the head of the appropriate State and/or local health agency(s) in the program area(s) that may be impacted by the proposed project no later than the receipt date of the Federal application. The appropriate State and/or local health agency is determined by the applicant. The following information must be provided:

a. A copy of the face page of the application (SF 424);

b. A summary of the project that should be titled ''Public Health System Impact Statement'' (PHSIS), not exceed one page, and include the following:

(1) A description of the population to be served;

(2) A summary of the services to be provided;

(3) A description of the coordination plans with the appropriate State and/or local health agencies.

If the State and/or local health official should desire a copy of the entire application, it may be obtained from the State Single Point of Contact (SPOC) or directly from the applicant.

Catalog of Federal Domestic Assistance Number

The Catalog of Federal Domestic Assistance Number is 93.283.

Other Requirements

Animal Subjects

If the proposed project involves research on animal subjects, the applicant must comply with the ''PHS Policy on Humane Care and Use of Laboratory Animals by Awardee Institutions.'' An applicant organization proposing to use vertebrate animals in PHS-supported activities must file an Animal Welfare Assurance with the Office for Protection from Research Risks at the National Institutes of Health.

Application Submission and Deadline

The original and two copies of the application PHS Form 5161–1 (Revised 7/92, OMB Number 0937–0189) must be submitted to Sharron P. Orum, Grants Management Officer, Grants Management Branch, Procurement and Grants Office, Centers for Disease Control and Prevention (CDC), 255 East Paces Ferry Road, NE., Room 314, Mail Stop E–18, Atlanta, Georgia 30305, on or before August 20, 1996.

1. Deadline: Applications shall be considered as meeting the deadline if they are either: a. Received on or before the deadline date; or b. Sent on or before the deadline date and received in time for submission to the objective review group. (Applicants must request a legibly dated U.S. Postal Service postmark or obtain a legibly dated receipt from a commercial carrier or U.S. Postal Service. Private metered postmarks shall not be acceptable as proof of timely mailing.)

2. Late Applications: Applications which do not meet the criteria in 1.a. or 1.b. above are considered late applications. Late applications will not be considered in the current competition and will be returned to the applicant.

Where To Obtain Additional Information

A complete program description and information on application procedures are contained in the application package. Business management technical assistance may be obtained from Locke Thompson, Grants Management Specialist, Grants Management Branch, Procurement and Grants Office, Centers for Disease Control and Prevention (CDC), 255 East Paces Ferry Road, NE, Room 314, Mail Stop E–18, Atlanta, Georgia 30305, telephone (404) 842–6593, or through the Internet or CDC Wonder electronic mail at: lxt1@opspgo1.em.cdc.gov. Programmatic technical assistance may be obtained from Jim Mills, National Center for Infectious Diseases, Centers for Disease Control and Prevention (CDC), 1600 Clifton Road, NE., Mail Stop G–13, Atlanta, Georgia 30333, telephone (404) 639–1075, or through the Internet or CDC Wonder electronic mail at: jum0@ciddavd1.em.cdc.gov.

Please refer to Announcement Number 644 when requesting information regarding this program.

Potential applicants may obtain a copy of Healthy People 2000 (Full Report, Stock No. 017–001–00474–0) or Healthy People 2000 (Summary Report, Stock No. 017–001–00473–1) referenced in the Introduction through the Superintendent of Documents, Government Printing Office, Washington, DC 20402–9325, telephone (202) 512–1800.

Important Notice

Atlanta, Georgia, will be the host of the 1996 Summer Olympic Games (July 19 through August 4, 1996). As a result of this event, it is likely that the Procurement and Grant Office (PGO) may experience delays in receipt of both regular and overnight mail deliveries. Contacting PGO employees during this time frame may also be hindered due to possible telephone disruptions.

To the extent authorized, please consider the use of voice mail, e-mail, and facsimile transmissions to the maximum extent practicable. Please do not fax lengthy documents, contract proposals or grant applications.

Dated: June 21, 1996.

Joseph R. Carter,

Acting Associate Director for Management and Operations, Centers for Disease Control and Prevention (CDC).

[FR Doc. 96–16387 Filed 6–26–96; 8:45 am]

BILLING CODE 4163–18–P

[Announcement Number 655]

Emerging Infections Program

Introduction

The Centers for Disease Control and Prevention (CDC) announces the availability of fiscal year (FY) 1996 funds for a cooperative agreement program to establish an Emerging Infections Program (EIP) to join a national network of EIPs. This program will assist in local, State, and national efforts to conduct surveillance and applied epidemiologic and laboratory research in emerging infectious diseases and to pilot and evaluate prevention measures. Although only one award will

be made in FY 1996, CDC may make additional awards in FY 1997 to approved applications received and evaluated under this announcement.

The CDC is committed to achieving the health promotion and disease prevention objectives of ''Healthy People 2000,'' a national activity to reduce morbidity and mortality and improve the quality of life. This announcement is related to the priority area of Immunization and Infectious Diseases. (For ordering a copy of ''Healthy People 2000,'' see the section ''Where To Obtain Additional Information.'')

Authority

This program is authorized under sections 301(a) [42 U.S.C. 241(a)] and 317(k) [42 U.S.C. 247b(k)] of the Public Health Service Act, as amended.

Smoke-Free Workplace

CDC strongly encourages all grant recipients to provide a smoke-free workplace and to promote the nonuse of all tobacco products, and Public Law 103–227, the Pro-Children Act of 1994, prohibits smoking in certain facilities that receive Federal funds in which education, library, day care, health care, and early childhood development services are provided to children.

Eligible Applicants

Eligible applicants are the official public health agencies of States or their bona fide agents. This includes the District of Columbia, American Samoa, the Commonwealth of Puerto Rico, the Virgin Islands, the Federated States of Micronesia, Guam, the Northern Mariana Islands, the Republic of the Marshall Islands, the Republic of Palau, and federally recognized Indian tribal governments. Non-State public health agency applicants must provide certification by the State designating the institution as the State's official applicant.

Availability of Funds

Approximately $500,000 is available in FY 1996 to fund one award. It is expected that the award will begin on or about September 30, 1996, and will be made for a 12-month budget period within a project period of up to 3 years. Funding estimates may vary and are subject to change. Continuation awards within the project period will be made on the basis of satisfactory progress and the availability of funds.

Purpose

The purpose of this cooperative agreement is to assist State health departments to establish Emerging Infections Programs (EIP) as part of a national network. EIPs will be population-based centers designed to assess the public health impact of emerging infections and to evaluate methods for their prevention and control. Activities of the EIPs will fall into the general categories of: (1) active surveillance; (2) applied epidemiologic and applied laboratory research; and (3) implementation and evaluation of pilot prevention/intervention projects.

Activities of the EIPs will be focused in the areas of drug-resistant infections, foodborne and waterborne diseases, and vaccine preventable or potentially vaccine preventable diseases. The EIPs will maintain sufficient flexibility to accommodate changes in projects as required by the emergence of public health infectious disease problems. EIPs will be strategically located to serve a variety of geographical areas, diverse groups and difficult-to-reach populations—e.g., underserved women and children, the homeless, immigrants and refugees, and persons infected with HIV. They will enlist the participation of local health departments, academic institutions, and other public and private organizations with an interest in addressing public health issues relating to emerging infectious diseases, and will seek support from sources, in addition to CDC, to operate the EIP.

Program Requirements

In conducting activities to achieve the purpose of this program, the recipient will be responsible for the activities under A. (Recipient Activities), and CDC will be responsible for the activities listed under B. (CDC Activities).

A. Recipient Activities

1. Establish and operate an EIP to further local, State, and national efforts to address emerging infectious diseases.

a. Organize the EIP so that it will have the capacity to conduct approximately four concurrent projects.

b. Organize the EIP so that it will maintain the ability to accommodate changes in specific projects and priorities as the public health system's need for information changes or new health problems emerge.

c. Operate the EIP so that it can function effectively as part of a national network of EIPs. EIPs will need to coordinate project priorities with CDC and among themselves to assure that important emerging infections issues are addressed appropriately.

d. Establish the EIP in a defined population, which could include either an entire State or a geographically defined area (or areas) within a State. To accomplish the objectives of certain EIP activities, a minimum population base of approximately 1,000,000 may be necessary.

2. Work to obtain technical and financial assistance to supplement the core assistance from CDC, as well as programmatic collaboration from other ''partner organizations.'' Partner organizations may be academic institutions and other public and private organizations with an interest in addressing public health issues relating to emerging infectious diseases (e.g., local public health agencies, public health laboratories, medical examiners, university medical schools, schools of public health, health care providers, clinical laboratories, community-based organizations, other Federal and State government agencies, research organizations, medical institutions, foundations, etc.).

3. Propose and conduct emerging infections activities in collaboration with appropriate partner organizations. Collaborate with other EIPs, as appropriate, to finalize protocols for EIP activities.

a. Categories of EIP activities. Activities of the EIP will fall into three categories:

(1) Active population-based surveillance projects. These may include collection and submission of disease-causing infectious agents to State, CDC, or other laboratories. For example, the surveillance case definition for the condition might involve detection of a positive culture or a drug resistant isolate in a microbiology laboratory, a serologic test result, a histopathologic finding, or a clinical syndrome, depending upon the disease or condition under surveillance; the specific approach to surveillance could also vary depending on the disease or condition under surveillance.

(2) Applied epidemiologic and applied laboratory projects. Examples of potential projects include: evaluation of illnesses often not specifically diagnosed for which information about trends and etiology are important (e.g., diarrhea, community-acquired pneumonia); evaluation of drug resistant infections; evaluation of the clinical spectrum of influenza and the efficacy of influenza vaccines in target populations; investigation of the relationships between infections and chronic diseases (e.g., respiratory infections and asthma attacks); behavioral surveillance projects designed to assess trends in behaviors (e.g., food handling practices, antibiotic use) that affect the risk for infectious diseases; assessment of the use and impact of newer diagnostic tools on the

diagnosis and management of specific diseases (e.g., neonatal group B streptococcal disease, Lyme disease); evaluation of emerging infectious diseases in difficult-to-reach populations, such as persons who do not have access to routine medical care or the homeless; examination of infectious diseases in particular populations (e.g., studying the relationship between cervical papillomavirus infection and cervical carcinoma in women); evaluation of the economic impact of infectious diseases or cost-benefit studies of intervention strategies.

(3) Implementation and evaluation of pilot prevention/intervention projects for emerging infectious diseases. Examples might include assessment of efforts to promote safe food preparation in the home, evaluation of impact of hand washing promotion on infectious diseases in child care facilities, or evaluation of antibiotic prescribing practices in outpatient settings.

b. Specific EIP activities.

(1) Propose and conduct the following core activities:

Active population-based laboratory surveillance for invasive disease caused by emerging, vaccine preventable, and drug resistant bacterial diseases, and for foodborne diseases (for additional information see Application Content, Operational Plan, paragraph d. of the Program Announcement included in the application kit).

(2) Propose up to 2 additional projects that could be conducted in the EIP. The optional projects may be chosen from the following list (see more complete description in Application Content, Operational Plan, paragraph e. of the Program Announcement included in the application kit).

(a) Population-based surveillance for hepatitis,

(b) Surveillance for emerging etiologies of pneumonia in the U.S.,

(c) Laboratory-based surveillance for Vancomycin-resistant Gram-positive pathogens,

(d) Laboratory-based Surveillance for *Clostridium difficile*,

(e) Infectious complications associated with blood transfusion,

(f) Surveillance for emerging etiologies of protozoal diarrhea,

(g) Surveillance for metronidazole-resistant Trichomonas infection,

(h) Evaluation of prevention of neonatal group B streptococcal disease,

(i) Active surveillance for Hemolytic Uremic Syndrome.

4. As a part of certain EIP projects, provide specimens such as disease-causing isolates or serum specimens to appropriate organizations (which may include CDC) for laboratory evaluation (e.g., molecular epidemiologic studies, evaluation of diagnostic tools).

5. Manage, analyze, and interpret data from EIP projects, and publish and disseminate important public health information stemming from EIP projects in collaboration with CDC.

6. Provide training opportunities (e.g., infectious disease fellows).

7. Monitor and evaluate scientific and operational accomplishments of the EIP and progress in achieving the purpose and overall goals of this program.

B. CDC Activities

1. Provide consultation and scientific and technical assistance in general operation of the EIP and in designing and conducting individual EIP projects.

2. Participate in analysis and interpretation of data from EIP projects. Participate in the dissemination of findings and information stemming from EIP projects.

3. Assist in monitoring and evaluating scientific and operational accomplishments of the EIP and progress in achieving the purpose and overall goals of this program.

4. As needed, perform laboratory evaluation of specimens or isolates (e.g., molecular epidemiologic studies, evaluation of diagnostic tools) obtained in EIP projects and integrate results with other data from EIP projects.

Notice of Intent To Apply

In order to assist CDC in planning for and executing the evaluation of applications submitted under this announcement, all parties intending to submit an application are requested to inform CDC of their intention to do so at their earliest convenience prior to the application due date. Notification should include: (1) name and address of institution, and (2) name, address, and telephone number of contact person. Notification should be provided by facsimile, postal mail, or E-mail, to Greg Jones, M.P.A., Funding Resources Specialist, National Center for Infectious Diseases (NCID), Centers for Disease Control and Prevention (CDC), 1600 Clifton Road, NE., Mailstop C–19, Atlanta, GA 30333, E-mail address gjj1@cidod1.em.cdc.gov, facsimile (404) 639–4195.

Evaluation Criteria

The applications will be reviewed and evaluated according to the following criteria (total 100 points):

1. Understanding the objectives of the EIP (total 5 points):

The extent to which the applicant demonstrates a clear understanding of the objectives of this cooperative agreement program. The extent to which the applicant demonstrates a clear understanding of the requirements, responsibilities, problems, constraints, and complexities that may be encountered in establishing and operating the EIP.

2. Population Base (total 5 points):

The extent to which the applicant defines clearly the geographic area and population base in which the EIP will operate. The extent to which the applicant defines a population base for the EIP that is sufficiently large and diverse to accomplish proposed EIP activities. The extent to which the applicant clearly describes various special populations in the EIP area, such as the rural or inner city poor, underserved women and children, the homeless, immigrants/refugees, and persons infected with HIV, that could be the focus of one or more EIP projects.

3. Capacity (total 35 points):

a. The extent to which the applicant demonstrates its capacity and ability to conduct active surveillance, applied epidemiologic and applied laboratory research, and prevention research in emerging infectious diseases (25 points).

b. The extent to which the applicant demonstrates its ability to develop and maintain strong cooperative relationships with various public and private local and regional medical, public health, academic, and community organizations. The extent to which applicant demonstrates its ability to solicit and secure financial and technical support and programmatic collaboration from other public and private organizations for conducting public health research projects. The extent to which applicant provides letters of support from non-applicant participating agencies, institutions, organizations, individuals, consultants, etc., indicating their willingness to participate, as represented in applicant's operational plan, in establishing and operating the center (total 10 points).

4. Operational Plan (total 40 points):

a. The extent to which the applicant's proposed plan for establishing and operating the EIP is detailed and clearly describes the proposed organizational and operating structure/procedures and clearly identifies the roles and responsibilities of all participating agencies, organizations, institutions, and individuals. The extent to which the applicant describes plans for collaboration with CDC in the establishment and ongoing operation of the EIP and individual EIP projects. The

extent to which the applicant's plan addresses all Recipient Activities listed in the announcement and appears feasible and capable of accomplishing the purpose of the program (15 points).

b. The extent to which the applicant proposes to conduct the core activities, as outlined in the Application Content section of the Program Announcement included in the application kit. The extent to which the applicant proposes potential additional appropriate projects that could be conducted at the EIP. The extent to which the proposed core and additional projects demonstrate that the applicant understands and is capable of conducting population-based surveillance, applied epidemiologic and applied laboratory studies, and pilot prevention programs. The quality of the proposed projects regarding consistency with public health needs, intent of this program, feasibility, methodology/approach, and collaboration/participation of partner organizations. The degree to which the applicant has met the CDC policy requirements regarding the inclusion of women, ethnic, and racial groups in proposed research. This includes: (1) the proposed plan for the inclusion of both sexes and racial and ethnic minority populations for appropriate representation; (2) the proposed justification when representation is limited or absent; (3) a statement as to whether the design of the study is adequate to measure differences when warranted; and (4) documentation of plans for recruitment and outreach for study participants that includes the process of establishing partnerships with community(ies) and recognition of mutual benefits (total 15 points).

c. The extent to which the applicant's plan clearly describes partnerships with appropriate organizations for establishing and operating the proposed EIP and for conducting individual EIP projects. Partner organizations may be academic institutions and other public and private organizations with an interest in addressing public health issues relating to emerging infectious diseases (e.g., local public health agencies, public health laboratories, medical examiners, university medical schools, schools of public health, health care providers, clinical laboratories, community-based organizations, other Federal and State government agencies, research organizations, medical institutions, foundations, etc.). The extent to which the applicant's plan describes possible training opportunities (e.g., infectious disease fellows). The extent to which the applicant proposes a clearly detailed and viable plan for soliciting and securing financial and technical assistance from other public and private organizations to supplement the core funding from CDC (total 10 points).

5. Project Management and Staffing (total 10 points):

The extent to which the applicant identifies its own professional and support staff, and professional and support staff from other agencies, institutions, and organizations, that have the experience, authority, and willingness to carry out recipient activities as evidenced by job descriptions, curriculum vitae, organizational charts, etc. The extent to which the applicant describes an approach to maintaining sufficiently flexible EIP staffing to accommodate the likelihood that the requirements of EIP projects will change from time to time.

6. Evaluation (total 5 points):

The extent to which applicant provides a detailed evaluation plan. The quality of the proposed plan for monitoring scientific and operational accomplishments of the EIP and of individual EIP projects. The quality of the proposed evaluation plan for monitoring progress in achieving the purpose and overall goals of this program.

7. Budget (not scored):

The extent to which the proposed budget is reasonable, clearly justifiable, and consistent with the intended use of cooperative agreement funds. The extent to which both Federal and non-Federal (e.g., State funding) contributions are presented.

8. Human Subjects (not scored):

If any proposed project involves human subjects, whether or not exempt from the DHHS regulations, the extent to which adequate procedures are described for the protection of human subjects. Note: Objective Review Group (ORG) recommendations on the adequacy of protections include: (1) protections appear adequate and there are no comments to make or concerns to raise, or (2) protections appear adequate, but there are comments regarding the protocol, or (3) protections appear inadequate and the ORG has concerns related to human subjects, or (4) disapproval of the application is recommended because the research risks are sufficiently serious and protection against the risks are inadequate as to make the entire application unacceptable.

Executive Order 12372 Review

Applications are subject to Intergovernmental Review of Federal Programs as governed by Executive Order 12372. E.O. 12372 sets up a system for State and local government review of proposed Federal assistance applications. Applicants (other than federally recognized Indian tribal governments) should contact their State Single Point of Contact (SPOC) as early as possible to alert them to the prospective applications and receive any necessary instructions on the State process. For proposed projects serving more than one State, the applicant is advised to contact the SPOC for each affected State. A current list of SPOCs is included in the application kit. Indian tribes are strongly encouraged to request tribal government review of the proposed application. If SPOCs or tribal governments have any process recommendations on applications submitted to CDC, they should forward them to Sharron P. Orum, Grants Management Officer, Grants Management Branch, Procurement and Grants Office, Centers for Disease Control and Prevention (CDC), 255 East Paces Ferry Road, NE., Mailstop E–18, Room 314, Atlanta, GA 30305. The due date for State process recommendations is 30 days after the application deadline date for new and competing continuation awards. The appropriation for this financial assistance program was received late in the fiscal year and would not allow for an application receipt date which would accommodate the 60-day State recommendation process period. CDC does not guarantee to ''accommodate or explain'' for State process recommendations it receives after that date.

Public Health System Reporting Requirements

This program is not subject to the Public Health System Reporting Requirements.

Catalog of Federal Domestic Assistance Number

The Catalog of Federal Domestic Assistance number is 93.283.

Other Requirements

Paperwork Reduction Act

Projects that involve the collection of information from ten or more individuals and funded by the cooperative agreement will be subject to review by the Office of Management and Budget (OMB) under the Paperwork Reduction Act.

Human Subjects

If the proposed project involves research on human subjects, the applicant must comply with the Department of Health and Human Services Regulations 45 CFR Part 46, regarding the protection of human subjects. Assurance must be provided to demonstrate that the project will be subject to initial and continuing review by the appropriate institutional review committee. In addition to other applicable committees, Indian Health Service (IHS) institutional review committees also must review the project if any component of IHS will be involved or will support the research. If any American Indian community is involved, its tribal government must also approve that portion of the project applicable to it. The applicant will be responsible for providing assurance in accordance with the appropriate guidelines and form provided in the application kit.

Women, Racial and Ethnic Minorities

It is the policy of the Centers for Disease Control and Prevention (CDC) and the Agency for Toxic Substances and Disease Registry (ATSDR) to ensure that individuals of both sexes and the various racial and ethnic groups will be included in CDC/ATSDR-supported research projects involving human subjects, whenever feasible and appropriate. Racial and ethnic groups are those defined in OMB Directive No. 15 and include American Indian, Alaskan Native, Asian, Pacific Islander, Black and Hispanic. Applicants shall ensure that women, racial and ethnic minority populations are appropriately represented in applications for research involving human subjects. Where clear and compelling rationale exist that inclusion is inappropriate or not feasible, this situation must be explained as part of the application. This policy does not apply to research studies when the investigator cannot control the race, ethnicity and/or sex of subjects. Further guidance to this policy is contained in the Federal Register, Vol. 60, No. 179, pages 47947–47951, dated Friday, September 15, 1995.

Animal Subjects

If the proposed project involves research on animal subjects, the applicant must comply with the ''PHS Policy on Humane Care and Use of Laboratory Animals by Awardee Institutions.'' An applicant organization proposing to use vertebrate animals in PHS-supported activities must file an Animal Welfare Assurance with the Office for Protection from Research Risks at the National Institutes of Health.

Application Submission and Deadline

The original and two copies of the application PHS Form 5161–1 (Revised 7/92, OMB Control Number 0937–0189) must be submitted to Sharron P. Orum, Grants Management Officer, Grants Management Branch, Procurement and Grants Office, Centers for Disease Control and Prevention (CDC), 255 East Paces Ferry Road, NE., Room 314, Mailstop E–18, Atlanta, GA 30305, Attention: Marsha Driggans, on or before August 23, 1996.

1. Deadline: Applications shall be considered as meeting the deadline if they are either:

(a) Received on or before the deadline date; or

(b) Sent on or before the deadline date and received in time for submission to the objective review group. (Applicants must request a legibly dated U.S. Postal Service postmark or obtain a legibly dated receipt from a commercial carrier or U.S. Postal Service. Private metered postmarks shall not be acceptable as proof of timely mailing.)

2. Late Applications: Applications which do not meet the criteria in 1.(a) or 1.(b) above are considered late applications. Late applications will not be considered in the current competition and will be returned to the applicant.

Where To Obtain Additional Information

A complete program description and information on application procedures are contained in the application package. Business management technical assistance may be obtained from Marsha Driggans, Grants Management Specialist, Grants Management Branch, Procurement and Grants Office, Centers for Disease Control and Prevention (CDC), 255 East Paces Ferry Road, NE., Room 314, Mailstop E–18, Atlanta, GA 30305, telephone (404) 842–6523, facsimile (404) 842–6513, E-mail mdd2@opspgo1.em.cdc.gov or CDC WONDER.

Programmatic technical assistance may be obtained from Robert Pinner, M.D., or Pat McConnon, M.P.H., Office of the Director, National Center for Infectious Diseases, Centers for Disease Control and Prevention (CDC), Mailstop C–12, 1600 Clifton Road, NE., Atlanta, GA 30333, telephone (404) 639–2603. E-mail address for Dr. Pinner: rwp1@cidod1.em.cdc.gov or CDC WONDER. E-mail address for Mr. McConnon: pjm2@cidod1.em.cdc.gov or CDC WONDER.

Please refer to Announcement Number 655 when requesting information and submitting and application.

Important Notice: Atlanta, GA, will be the host of the 1996 Summer Olympics Games, July 19 through August 4, 1996. As a result of this event, it is likely that the Procurement and Grants Office (PGO), CDC, may experience delays in the receipt of both regular and overnight mail deliveries. Contacting PGO employees during this time frame may also be hindered due to the possible telephone disruptions. To the extent authorized, please consider the use of voice mail, E-mail, and facsimile transmission to the maximum extent practicable. However, do not fax lengthy documents or grant applications.

You may obtain this announcement from one of two Internet sites on the actual publication date: CDC's homepage at http://www.cdc.gov or at the Government Printing Office homepage (including free on-line access to the Federal Register at http://www.access.gpo.gov).

Potential applicants may obtain a copy of ''Healthy People 2000'' (Full Report, Stock No. 017–001–00474–0) or ''Healthy People 2000'' (Summary Report, Stock No. 017–001–00473–1) referenced in the ''Introduction'' through the Superintendent of Documents, Government Printing Office, Washington, DC 20402–9325, telephone (202) 512–1800.

Potential applicants may obtain a copy of ''Addressing Emerging Infectious Disease Threats: A Prevention Strategy for the United States'' through the Centers for Disease Control and Prevention (CDC), National Center for Infectious Diseases, Office of Planning and Health Communication—EP, Mailstop C–14, 1600 Clifton Road, Atlanta, GA 30333. Requests may also be sent by facsimile to (404) 639–3039.

Dated: June 21, 1996.

Joseph R. Carter,

Acting Associate Director for Management and Operations, Centers for Disease Control and Prevention (CDC).

[FR Doc. 96–16389 Filed 6–26–96; 8:45 am]

BILLING CODE 4163–18–P

[Announcement Number 664]

Primate Model for Studying the Pathogenesis of Measles Infections and for Development of Improved Measles Vaccines

Introduction

The Centers for Disease Control and Prevention (CDC) announces the availability of fiscal year (FY) 1996 funds for a cooperative agreement

program to support research into the pathogenesis of measles virus in a primate model. The goal of this program is to assist researchers in defining the mechanism of immune protection from measles virus and to use this information to develop improved vaccines for worldwide measles control efforts.

The CDC is committed to achieving the health promotion and disease prevention objectives of Healthy People 2000, a national activity to reduce morbidity and mortality and improve the quality of life. This announcement is related to the priority area of Immunization and Infectious Diseases. (To order a copy of Healthy People 2000, see the section Where To Obtain Additional Information.)

Authority

This program is authorized under sections 301(a) and 317(k)(1) [42 U.S.C. 241(a) and 247b(k)(1)] of the Public Health Service Act, as amended.

Smoke-Free Workplace

CDC strongly encourages all grant recipients to provide a smoke-free workplace and to promote the nonuse of all tobacco products, and Public Law 103–227, the Pro-Children Act of 1994, prohibits smoking in certain facilities that receive Federal funds in which education, library, day care, health care, and early childhood development services are provided to children.

Eligible Applicants

Applications may be submitted by public and private, nonprofit and for-profit organizations and governments and their agencies. Thus, universities, colleges, research institutions, hospitals, other public and private organizations, including State and local governments or their bona fide agents, federally recognized Indian tribal governments, Indian tribes or Indian tribal organizations, and small, minority- and/or women-owned businesses are eligible to apply.

Availability of Funds

Approximately $200,000 is available in FY 1996 to fund one award. It is expected that the award will begin on or about September 30, 1996, and will be made for a 12-month budget period within a project period of up to 3 years. Funding estimates may vary and are subject to change. Continuation awards within the approved project period will be made on the basis of satisfactory progress and availability of funds.

Purpose

The purpose of this cooperative agreement is to assist the recipient in developing a primate model for measles infection and in conducting studies to: (1) improve the infection model, (2) characterize the immune response to natural disease and vaccination, (3) develop and test experimental measles vaccines, and (4) investigate the pathogenesis and epidemiology of measles infections.

More specifically, the purpose of the program is to achieve the following research goals:

1. Characterization of the immune response to natural disease and vaccination. Studies should attempt to measure differences between the immune response in animals receiving measles vaccination to those experiencing infection with a virulent strain. Efforts should be aimed at providing a complete description of the humoral and cellular immune responses and should also attempt to measure mucosal immunity.

2. Development of a vaccine that will protect in the presence of maternal antibody. The goal of these studies should be to develop a vaccine that will protect newborns from measles infection during the first year of life and not interfere with subsequent vaccination using standard vaccines.

3. Evaluation of immune response to individual measles virus antigens. Research should be designed to measure the immune response generated by experimental measles vaccines and the degree of protection provided. Measures of mucosal and cellular immunity as well as immune memory will be particularly important.

Program Requirements

In conducting activities to achieve the purpose of this program, the recipient shall be responsible for the activities under A., below, and CDC shall be responsible for conducting activities under B., below.

A. Recipient Activities

1. Develop study design to accomplish the research goals described above.

2. Perform all inoculations of animals. Maintain records of clinical observations and obtain samples for laboratory analysis.

3. Perform laboratory analysis of samples obtained from study animals.

4. Provide routine veterinary care, housing and other support for rhesus macaques to be used in experiments. Comply fully with PHS policies regarding research on animal subjects.

5. Maintain sufficient numbers of seronegative animals so that experiments can be completed within an appropriate amount of time.

6. Develop experimental measles vaccines and evaluate them in the animal model.

7. Analyze data and prepare manuscripts describing results of research investigations.

B. CDC Activities

1. Provide technical assistance and advice for design and conduct of the research.

2. Provide assistance in development of various preparations of measles virus antigens for use as experimental vaccines. This material may consist of vaccines derived of recombinant DNA technology.

3. Provide specialty reagents such as monoclonal and polyclonal antiserum and PCR primers as necessary.

4. Assist in conducting specialized analysis of samples obtained from test animals. These may include special serological or immunologic assays, as well as assays to detect and measure measles virus or measles virus RNA in various tissue samples. Perform genetic characterization of viruses used in the study.

5. Assist in data analysis.

Notice of Intent To Apply

In order to assist CDC in planning for and executing the evaluation of applications submitted under this announcement, all parties intending to submit an application are requested to inform CDC of their intention to do so at their earliest convenience prior to the application due date. Notification should include: (1) name and address of institution, and (2) name, address, and telephone number of contact person. Notification should be provided by facsimile, postal mail, or E-mail to Paul Rota, Ph.D., National Center for Infectious Diseases, Centers for Disease Control and Prevention (CDC), 1600 Clifton Road, NE., Mailstop G–17, Atlanta, GA 30333, E-mail par1@ciddvd1.em.cdc.gov, facsimile (404) 639–1307.

Evaluation Criteria

All applications will be reviewed and evaluated according to the following criteria (100 total points):

1. Background and Need (10 total points)

Extent to which applicant demonstrates a clear understanding of the purpose and objectives of this proposed cooperative agreement.

2. Capacity (55 total points)

a. Extent to which applicant describes adequate resources and facilities for conducting the project. Extent to which facilities for the safe handling of infectious agents are available. (10 points)

b. Extent to which applicant documents that professional personnel involved in the project are qualified and have past experience and achievements in research related to that proposed in this cooperative agreement as evidenced by curriculum vitae, publications, etc. Extent to which the applicant demonstrates experience with virology, particularly the virology of measles virus. (10 points)

c. Extent to which applicant demonstrates experience with viral pathogenesis/immunology in rhesus macaques or other primate system. Extent to which the applicant can demonstrate previous or ongoing experience with measles infections of primates. Extent to which the applicant can produce a measles infection that is similar to measles infections in humans in rhesus macaques following intranasal inoculation. (35 points)

3. Objectives and Technical Approach (35 total points)

a. Extent to which applicant describes objectives of the proposed project which are consistent with the purpose and program requirements of this cooperative agreement and which are measurable and time-phased. (5 points)

b. Extent to which the plan clearly describes applicant's technical approach/methods for conducting the proposed studies. Extent to which applicant describes specific study protocols or plans for the development of study protocols that are appropriate for achieving project objectives. (10 points)

c. Extent to which applicant describes appropriate collaboration with CDC during various phases of the project. (10 points)

d. Extent to which applicant provides a detailed plan for evaluating study results and for evaluating progress towards achieving project objectives. (10 points)

4. Budget (Not Scored)

Extent to which the proposed budget is reasonable, clearly justifiable, and consistent with the intended use of cooperative agreement funds.

Executive Order 12372

Applications are not subject to review under Executive Order 12372, Intergovernmental Review of Federal Programs.

Public Health System Reporting Requirements

This program is not subject to the Public Health System Reporting Requirements.

Catalog of Federal Domestic Assistance Number

The Catalog of Federal Domestic Assistance Number is 93.283.

Other Requirements

Animal Subjects

This proposed project involves research on animal subjects; therefore, the applicant must comply with the ''PHS Policy on Humane Care and Use of Laboratory Animals by Awardee Institutions.'' An applicant organization using vertebrate animals in PHS-supported activities must file an Animal Welfare Assurance with the Office for Protection from Research Risks at the National Institutes of Health, Bethesda, Maryland.

Application Submission and Deadline

The original and two copies of application PHS Form 398 (Revised 5/95, OMB Number 0925–0001) must be submitted to Sharron P. Orum, Grants Management Officer, Grants Management Branch, Procurement and Grants Office, Centers for Disease Control and Prevention (CDC), 255 East Paces Ferry Road, NE., Room 314, Mailstop E–18, Atlanta, GA 30305, Attention: Marsha Driggans, on or before August 12, 1996.

1. *Deadline:* Applications shall be considered as meeting the deadline if they are either:

a. Received on or before the deadline date; or

b. Sent on or before the deadline date and received in time for submission to the independent review group. (Applicants should request a legibly dated U.S. Postal Service postmark or obtain a legibly dated receipt from a commercial carrier or U.S. Postal Service. Private metered postmarks shall not be acceptable proof of timely mailing.)

2. *Late Applications:* Applications which do not meet the criteria in 1.a. or 1.b., above, are considered late applications. Late applications shall not be considered in the current competition for funding and will be returned to the applicant.

Where To Obtain Additional Information

A complete program description and information on application procedures are contained in the application package. An application package and business management and technical assistance may be obtained from Marsha Driggans, Grants Management Specialist, Grants Management Branch, Procurement and Grants Office, Centers for Disease Control and Prevention (CDC), 255 East Paces Ferry Road, NE., Room 314, Mailstop E–18, Atlanta, GA 30305, telephone (404) 842–6523, E-mail mdd2@opspgo1.em.cdc.gov, facsimile (404) 842–6513.

Programmatic technical assistance may be obtained from Paul Rota, Ph.D., Supervisory Research Microbiologist, Measles Section, Division of Viral and Rickettsial Diseases, National Center for Infectious Diseases, Centers for Disease Control and Prevention (CDC), 1600 Clifton Road, NE., Mailstop G–17, Atlanta, GA 30333, telephone (404) 639–3308, E-mail par1@ciddvd1.em.cdc.gov, facsimile (404) 639–1307.

Please refer to Announcement Number 664 when requesting information regarding this program.

Important Notice: Atlanta, GA, will be the host of the 1996 Summer Olympics Games, July 19 through August 4, 1996. As a result of this event, it is likely that the Procurement and Grants Office (PGO), CDC, may experience delays in the receipt of both regular and overnight mail deliveries. Contacting PGO employees during this time frame may also be hindered due to the possible telephone disruptions. To the extent authorized, please consider the use of voice mail, E-mail, and facsimile transmission to the maximum extent practicable. However, do not fax lengthy documents or grant applications.

You may obtain this announcement from one of two Internet sites on the actual publication date: CDC's homepage at http://www.cdc.gov or at the Government Printing Office homepage (including free on-line access to the Federal Register at http://www.access.gpo.gov).

Potential applicants may obtain a copy of Healthy People 2000 (Full Report: Stock No. 017–001–00474–0) or Healthy People 2000 (Summary Report: Stock No. 017–001–00473–1), referenced in the Introduction, through the Superintendent of Documents, Government Printing Office, Washington, DC 20402–9325, telephone (202) 512–1800.

Dated: June 21, 1996.

Joseph R. Carter,

Acting Associate Director for Management and Operations, Centers for Disease Control and Prevention (CDC).

[FR Doc. 96–16386 Filed 6–26–96; 8:45 am]

BILLING CODE 4163–18–P

Disease, Disability, and Injury Prevention and Control Special Emphasis Panel (SEP): Community Partners for Healthy Farming, Program Announcement 646, and Centers for Agricultural Disease and Injury Research, Education, and Prevention, Program Announcement 647: Meeting

In accordance with section 10(a)(2) of the Federal Advisory Committee Act (Pub. L. 92–463), the Centers for Disease Control and Prevention (CDC) announces the following committee meeting.

Name: Disease, Disability, and Injury Prevention and Control SEP: Community Partners for Healthy Farming, Program Announcement 646, and Centers for Agricultural Disease and Injury Research, Education, and Prevention, Program Announcement 647.

Times and Dates: 8 p.m.–10 p.m., August 4, 1996; 8 a.m.–6 p.m., August 5, 1996; 8 a.m.–5 p.m., August 6, 1996.

Place: Commonwealth Hilton Hotel, I–75 and Turfway Road, Florence, Kentucky 45275.

Status: Closed.

Matters to be Discussed: The meeting will include the review, discussion, and evaluation of applications received in response to Program Announcements 646 and 647.

The meeting will be closed to the public in accordance with provisions set forth in section 552b(c) (4) and (6), Title 5 U.S.C., and the Determination of the Associate Director for Management and Operations, CDC, pursuant to Pub. L. 92–463.

Contact Person for More Information: Price Connor, Ph.D., Research Grant Program Officer, Office of Extramural Coordination and Special Projects, National Institute for Occupational Safety and Health, CDC, M/S D30, 1600 Clifton Road, NE, Atlanta, Georgia 30333, telephone 404/639–3342.

Dated: June 21, 1996.

John C. Burckhardt,

Acting Director, Management Analysis and Services Office, Centers for Disease Control and Prevention (CDC).

[FR Doc. 96–16390 Filed 6–26–96; 8:45 am]

BILLING CODE 4163–19–M

Health Care Financing Administration

[ORD–088–N]

New and Pending Demonstration Project Proposals Submitted Pursuant to Section 1115(a) of the Social Security Act: May 1996

AGENCY: Health Care Financing Administration (HCFA).

ACTION: Notice.

SUMMARY: One new proposal for a Medicaid demonstration project was submitted to the Department of Health and Human Services during the month of May 1996 under the authority of section 1115 of the Social Security Act. No proposals were approved, disapproved, or withdrawn during this time period. Those pending during the month of May remain unchanged from those in the Federal Register on June 10, 1996, 61 FR 29409. (This notice can be accessed on the Internet at HTTP://WWW.HCFA.GOV/ORD/ORDHP1.HTML.)

COMMENTS: We will accept written comments on these proposals. We will, if feasible, acknowledge receipt of all comments, but we will not provide written responses to comments. We will, however, neither approve nor disapprove any new proposal for at least 30 days after the date of this notice to allow time to receive and consider comments. Direct comments as indicated below.

ADDRESSES: Mail correspondence to: Susan Anderson, Office of Research and Demonstrations, Health Care Financing Administration, Mail Stop C3–11–07, 7500 Security Boulevard, Baltimore, MD 21244–1850.

FOR FURTHER INFORMATION CONTACT: Susan Anderson (410) 786–3996.

SUPPLEMENTARY INFORMATION:

I. Background

Under section 1115 of the Social Security Act (the Act), the Department of Health and Human Services (HHS) may consider and approve research and demonstration proposals with a broad range of policy objectives. These demonstrations can lead to improvements in achieving the purposes of the Act.

In exercising her discretionary authority, the Secretary has developed a number of policies and procedures for reviewing proposals. On September 27, 1994, we published a notice in the Federal Register (59 FR 49249) that specified (1) the principles that we ordinarily will consider when approving or disapproving demonstration projects under the authority in section 1115(a) of the Act; (2) the procedures we expect States to use in involving the public in the development of proposed demonstration projects under section 1115; and (3) the procedures we ordinarily will follow in reviewing demonstration proposals. We are committed to a thorough and expeditious review of State requests to conduct such demonstrations.

As part of our procedures, we publish a notice in the Federal Register with a monthly listing of all new submissions, pending proposals, approvals, disapprovals, and withdrawn proposals. Proposals submitted in response to a grant solicitation or other competitive process are reported as received during the month that such grant or bid is awarded, so as to prevent interference with the awards process.

II. Listing of New, Pending, Approved, and Withdrawn Proposals for the Month of May 1996

A. Comprehensive Health Reform Programs

1. New Proposals:

The following comprehensive health reform proposal was received during the month of May:

Demonstration Title/State: Maryland Medicaid Reform Proposal—Maryland.

Description: A statewide section 1115 demonstration proposal has been developed to: provide a patient-focused system through managed care entities; build on the strengths of the current Maryland health care system; provide comprehensive, prevention-orientated systems of care; hold Managed Care Organizations (MCOs) accountable for high-quality care; and achieve better value and predictability for State expenditures.

Date Received: May 3, 1996.

State Contact: Mary Mussman, M.D., M.P.H., Acting Executive Director, Center for Health Program Development and Management, Social Sciences Building, Room 309A, 5401 Wilkens Avenue, Baltimore, MD 21228–5398, (410) 455–6804.

Federal Project Officer: Gina Clemons, Health Care Financing Administration, Office of Research and Demonstrations, Office of State Health Reform Demonstrations, Mail Stop C3–18–26, 7500 Security Boulevard, Baltimore, MD 21244–1850.

2. Pending, Approved, and Withdrawn Proposals

We did not approve or disapprove any proposals during the month of May nor were any proposals withdrawn during that month. Therefore, pending proposals for the month of November 1995 published in the Federal Register on January 23, 1996, 61 FR 1769, remain unchanged.

B. Other Section 1115 Demonstration Proposals

1. New Proposals

No new proposals were received during the month of May.

2. Pending, Approved, and Withdrawn Proposals

We did not approve or disapprove any Other Section 1115 Demonstration Proposals during May nor were any proposals withdrawn during that

month. Pending proposals for the month of November 1995 published in the Federal Register on January 23, 1996, 61 FR 1769, and for the months of February and March 1996 published in the Federal Register on May 14, 1996, 61 FR 24318 remain unchanged.

III. Requests for Copies of a Proposal

Requests for copies of a specific Medicaid proposal should be made to the State contact listed for the specific proposal. If further help or information is needed, inquiries should be directed to HCFA at the address above.

(Catalog of Federal Domestic Assistance Program, No. 93.779; Health Financing Research, Demonstrations, and Experiments.)

Dated: June 13, 1996.

Barbara Cooper,

Acting Director, Office of Research and Demonstrations.

[FR Doc. 96–16404 Filed 6–26–96; 8:45 am]

BILLING CODE 4120–01–P

[OPL–010–N]

Medicare Program; July 22, 1996 Meeting of the Practicing Physicians Advisory Council

AGENCY: Health Care Financing Administration (HCFA), HHS.

ACTION: Notice of meeting.

SUMMARY: In accordance with section 10(a) of the Federal Advisory Committee Act, this notice announces a meeting of the Practicing Physicians Advisory Council. This meeting is open to the public.

DATES: The meeting is scheduled for July 22, 1996, from 9 a.m. until 5 p.m. e.d.t. (Additional meetings are tentatively scheduled for September 23 and December 16, 1996.)

ADDRESSES: The meeting will be held in the Auditorium, 1st Floor, Health Care Financing Administration Building, 7500 Security Boulevard, Baltimore, Maryland 21244.

FOR FURTHER INFORMATION CONTACT: Samuel Shekar, M.D., Executive Director, Practicing Physicians Advisory Council, Room 425–H, Hubert H. Humphrey Building, 200 Independence Avenue, SW., Washington, DC 20201, (202) 260–5463.

SUPPLEMENTARY INFORMATION: The Secretary of the Department of Health and Human Services (the Secretary) is mandated by section 1868 of the Social Security Act, as added by section 4112 of the Omnibus Budget Reconciliation Act of 1990 (Public Law 101–508, effective on November 5, 1990), to appoint a Practicing Physicians Advisory Council (the Council) based on nominations submitted by medical organizations representing physicians. The Council meets quarterly to discuss certain proposed changes in regulations and carrier manual instructions related to physicians' services, as identified by the Secretary. To the extent feasible and consistent with statutory deadlines, the consultation must occur before publication of the proposed changes. The Council submits an annual report on its recommendations to the Secretary and the Administrator of the Health Care Financing Administration not later than December 31 of each year.

The Council consists of 15 physicians, each of whom has submitted at least 250 claims for physicians' services under Medicare or Medicaid in the previous year. Members of the Council include both participating and nonparticipating physicians, and physicians practicing in rural and underserved urban areas. At least 11 members must be doctors of medicine or osteopathy authorized to practice medicine and surgery by the States in which they practice. Members have been invited to serve for overlapping 4-year terms. In accordance with section 14 of the Federal Advisory Committee Act, terms of more than 2 years are contingent upon the renewal of the Council by appropriate action before the end of the 2-year term.

The Council held its first meeting on May 11, 1992.

The current members are: Richard Bronfman, D.P.M.; Wayne R. Carlsen, D.O.; Gary C. Dennis, M.D.; Catalina E. Garcia, M.D.; Kenneth D. Hansen, M.D.; Mary T. Herald, M.D.; Ardis Hoven, M.D.; Sandral Hullett, M.D.; Jerilynn S. Kaibel, D.C.; Marie G. Kuffner, M.D.; Marc Lowe, M.D.; Katherine L. Markette, M.D.; Susan Schooley, M.D.; Maisie Tam, M.D., and Kenneth M. Viste, Jr., M.D. The chairperson is Kenneth M. Viste, Jr., M.D.

The next meeting of the Council will be held on July 22, 1996. The Council agenda will provide for discussion and comment on the following four items:

- Clinical Laboratory Improvement Act (CLIA) implementation.
- Practice Expense Relative Value Project.
- Medicare CHOICES demonstration.
- Operation Restore Trust (ORT).

Council members will also receive legislative and Managed Care updates. Those individuals or organizations who wish to make 5-minute oral presentations on the four issues listed should contact the Executive Director by 12:00 noon, July 3, 1996, to be scheduled. The number of oral presentations may be limited by the time available. A written copy of the oral remarks should be submitted to the Executive Director no later than 12:00 noon, July 12, 1996. For the name, address, and telephone number of the Executive Director, see the **FOR FURTHER INFORMATION CONTACT** section at the beginning of this notice. Anyone who is not scheduled to speak may also submit written comments to the Executive Director by 12:00 noon, July 12, l996. The meeting is open to the public, but attendance is limited to the space available.

(Section 1868 of the Social Security Act (42 U.S.C. 1395ee) and section 10(a) of Public Law 92–463 (5 U.S.C. App. 2, section 10(a)); 45 CFR Part 11)

(Catalog of Federal Domestic Assistance Program No. 93.773, Medicare—Hospital Insurance; and Program No. 93.774, Medicare—Supplementary Medical Insurance Program)

Dated: June 19, 1996.

Bruce C. Vladeck,

Administrator, Health Care Financing Administration.

[FR Doc. 96–16406 Filed 6–26–96; 8:45 am]

BILLING CODE 4120–01–P

Agency Information Collection Activities: Submission for OMB Review; Comment Request

AGENCY: Health Care Financing Administration, HHS.

In compliance with the Paperwork Reduction Act of 1995 (44 U.S.C. 3501 et seq.), the Health Care Financing Administration (HCFA), Department of Health and Human Services, has submitted to the Office of Management and Budget (OMB) the following proposals for the collection of information. Interested persons are invited to send comments regarding the burden estimate or any other aspect of this collection of information, including any of the following subjects: (1) The necessity and utility of the proposed information collection for the proper performance of the agency's functions; (2) the accuracy of the estimated burden; (3) ways to enhance the quality, utility, and clarity of the information to be collected; and (4) the use of automated collection techniques or other forms of information technology to minimize the information collection burden.

1. *Type of Information Collection Request:* Reinstatement, without change, of a previously approved collection for which approval has expired; *Title of Information Collection:* Information Collection requirements in Final Peer Review Organization Sanction Regulations 42 CFR 1004.40(b), 1004.50(g), 1004.60(b), and 1004.70(b) and (c); *Form No.:* HCFA–R–65; *Use:*

This rule revises and updates the procedures governing the imposition and adjudication of program sanctions predicated on recommendations of State Utilization and Quality Control Peer Review Organizations (PROs). These changes are being made as a result of statutory revisions designed to address health care fraud and abuse issues and the Office of Inspector General sanction process; *Frequency:* On Occasion; *Affected Public:* Business or other for profit; *Number of Respondents:* 53; *Total Annual Hours:* 22,684.

2. *Type of Information Collection Request:* Reinstatement, without change, of a previously approved collection for which approval has expired; *Title of Information Collection:* Post-Certification Revisit Form; *Form No.:* HCFA–2567B; *Use:* This form is used to collect deficiency correction status information pursuant to the Clinical Laboratory Improvement Amendments of 1988 and the Medicare/Medicaid certification requirements of P.L.100–578 and sections 1864 and 1902 of the Social Security Act; *Frequency:* Annually; *Affected Public:* Business or other for profit, State, Local, or Tribal Governments; *Number of Respondents:* 72,000; *Total Annual Hours:* 61,000.

3. *Type of Information Collection Request:* Reinstatement, without change, of a previously approved collection for which approval has expired; *Title of Information Collection:* State Survey Agency List of Positions and Schedule of Equipment Purchases; *Form No.:* HCFA–1465, HCFA–1466; *Use:* The information collected is used by HCFA to determine the types of equipment being purchased and the need for such equipment, the information also provides HCFA with the types and skill levels of surveyor positions that are being requested by the State; *Frequency:* Annually; *Affected Public:* State, local, and tribal government; *Number of Respondents:* 53; *Total Annual Hours:* 239.

4. *Type of Information Collection Request:* New Collection; *Title of Information Collection:* Granting and Withdrawal of Deeming Authority to National Accreditation Organizations; *Form No.:* HCFA–R–191; *Use:* The information collected is used by HCFA to determine whether a private accreditation organization's criteria for granting accreditation is equal to or more stringent than the criteria used by Medicare to determine Ambulatory Surgical Center eligibility for participation in the Medicare Program; *Frequency:* Other (initial application, as needed); *Affected Public:* Not for profit institutions; *Number of Respondents:* 2; *Total Annual Hours:* 192.

5. *Type of Information Collection Request:* Reinstatement, without change, of a previously approved collection for which approval has expired; *Title of Information Collection:* Attending Physicians Statement and Documentation Of Medical Emergency; *Form No.:* HCFA–1771; *Use:* This form is used to document the attending physician's statement that the hospitalization was required due to an emergency and give support for the claim; *Frequency:* On occasion; *Affected Public:* Business or other for profit; *Number of Respondents:* 1,700; *Total Annual Responses:* 1,700; *Total Annual Hours 425.*

6. *Type of Information Collection Request:* Reinstatement, without change, of a previously approved collection for which approval has expired; *Title of Information Collection:* Video Display Terminal (VDT) Operators Eye Care Program; *Form No.:* HCFA–81; *Use:* This form is needed to document gather information necessary to process employees' request to participate in the VDT Operators' Eye Care Program. Part of the form will be completed by HCFA employees and their supervisors. Another part of the form is completed by personal eye care practitioners and opticians providing services to HCFA employees; *Frequency:* On occasion; *Affected Public:* Business or other for profit, individuals or households, Federal Government; *Number of Respondents:* 500; *Total Annual Responses:* 500; *Total Annual Hours 2,000.*

To obtain copies of the supporting statement for the proposed paperwork collections referenced above, access HCFA's WEB SITE ADDRESS at http://www.hcfa.gov, or to obtain the supporting statement and any related forms, E-mail your request, including your address and phone number, to Paperwork@hcfa.gov, or call the Reports Clearance Office on (410) 786–1326. Written comments and recommendations for the proposed information collections should be sent within 30 days of this notice directly to the OMB Desk Officer designated at the following address:

OMB Human Resources and Housing Branch, Attention: Allison Eydt, New Executive Office Building, Room 10235, Washington, DC 20503.

Dated: June 20, 1996.

Kathleen B. Larson,

Director, Management Planning and Analysis Staff, Office of Financial and Human Resources, Health Care Financing Administration.

[FR Doc. 96–16440 Filed 6–26–96; 8:45 am]

BILLING CODE 4120–03–P

DEPARTMENT OF HOUSING AND URBAN DEVELOPMENT

Office of the Assistant Secretary for Community Planning and Development; Notice of Extension of Deadline for the; Notice of Funding Availability (NOFA) for Continuum of Care Homeless Assistance; Supportive Housing Program (SHP); Shelter Plus Care (S+C); Section 8 Moderate Rehabilitation Single Room Occupancy Program for Homeless Individuals (SRO)

[Docket No. FR–4042–N–05]

AGENCY: Office of the Assistant Secretary for Community Planning and Development, HUD.

ACTION: Notice of funding availability (NOFA); Notice of Extension of Deadline.

SUMMARY: On March 15, 1996 (61 FR 10866), HUD published a notice announcing the availability of fiscal year (FY) 1996 funding for three of its programs which assist communities in combatting homelessness. The three programs are: (1) Supportive Housing; (2) Shelter Plus Care; and (3) Section 8 Moderate Rehabilitation for Single Room Occupancy Dwellings for Homeless Individuals.

The March 15, 1996 NOFA provided for an application deadline of June 12, 1996. Due to possible ambiguity concerning timely submission of the application by the June 12, 1996 application deadline, HUD is extending the application deadline to July 3, 1996. All applications that HUD has received or will receive following publication of the March 15, 1996 NOFA through and including the date of the new application deadline set forth in this notice will be considered timely filed.

DEADLINE DATES: All applications are due in HUD Headquarters before midnight Eastern Time on *July 3, 1996. HUD will treat as ineligible for consideration applications that are received after that deadline. Applications may not be sent by facsimile (FAX).*

Applications Mailed. Applications that are mailed before will be considered timely filed if postmarked before midnight on *July 3, 1996.*

Applications Sent by Overnight Delivery. Overnight delivery items received after *July 3, 1996* will be deemed to have been received by that date upon submission of documentary evidence that they were placed in transit with the overnight delivery service by no later than *July 2, 1996.*

Applications Hand-Delivered. Before close of business on the deadline date

shown above completed applications will be accepted at the following address: Special Needs Assistance Programs, Room 7270, Office of Community Planning and Development, Department of Housing and Urban Development, 451 Seventh Street, S.W., Washington, DC 20410, Attention: Continuum of Care Funding. On the deadline date, hand-carried applications will be received at the South lobby of the Department of Housing and Urban Development at the above address.

Copies of Applications to Field Offices. Two copies of the application must also be sent to the HUD Field Office serving the State in which the applicant's projects are located. A list of Field Offices appears in an appendix of the March 15, 1996 NOFA (61 FR 10866). Field Office copies must be received by the application deadline as well, but a determination that an application was received on time will be made solely on receipt of the application at HUD Headquarters in Washington.

ADDRESSES: For a copy of the application package and supplemental information please call the Community Connections information center at 1–800–998–9999 (voice) or 1–800–483–2209 (TTY), or contact by internet at gopher://amcom.aspensys.com:75/11/funding. Also, you can purchase, for a nominal fee, a video that walks you through the application package and provides general background that can be useful in preparing your application. The fee for the video may be waived in cases of financial hardship. For copies of the relevant portions of your community's Consolidated Plan, please contact the local or State official responsible for that Plan. If you need assistance in identifying this person, please call your local HUD Field Office.

Electronic Submission. In addition to submitting the application narratives and forms in the traditional manner, you may also include an electronic version of your materials on a 3½'' computer diskette. The inclusion of the computer version this year is strictly an optional supplement to the standard application.

If you use HUD's Consolidated Planning software to generate supplemental maps, charts, or project lists, please include these files on the diskette as well.

FOR FURTHER INFORMATION CONTACT: The Community Connections information center at 1–800–998–9999 (voice) or 1–800–483–2209 (TTY), or by internet at gopher://amcom.aspensys.com:75/11/funding.

SUPPLEMENTARY INFORMATION: On March 15, 1996 (61 FR 10866), HUD published a notice announcing the availability of fiscal year (FY) 1996 funding for three of its programs which assist communities in combatting homelessness. The three programs are: (1) Supportive Housing; (2) Shelter Plus Care; and (3) Section 8 Moderate Rehabilitation for Single Room Occupancy Dwellings for Homeless Individuals.

The March 15, 1996 NOFA provided for an application deadline of midnight Eastern Time on June 12, 1996, and designated certain submission procedures if the application was mailed through the U.S. Postal Service or submitted by overnight delivery service. The application kit issued with this NOFA also provided for a June 12, 1996 application deadline, but did not contain the special procedures to be followed if the application was to be mailed or submitted by overnight delivery service.

Due to possible ambiguity concerning timely submission of the application by the June 12, 1996 application deadline, HUD is extending the application deadline to July 3, 1996. All applications that HUD has received or will receive following publication of the March 15, 1996 NOFA through and including the date of the new application deadline set forth in this notice will be considered timely filed. The new deadline is set forth in the ''Deadline Dates'' section of this document.

Dated: June 25, 1996.

Andrew Cuomo,

Assistant Secretary for Community Planning and Development.

[FR Doc. 96–16592 Filed 6–25–96; 1:53 pm]

BILLING CODE 4210–29–P

DEPARTMENT OF THE INTERIOR

Fish and Wildlife Service

Issuance of Permit for Incidental Take of Threatened Species

AGENCY: Fish and Wildlife Service, Interior.

ACTION: Notice.

SUMMARY: On February 13, 1996, a notice was published in the Federal Register (61 FR 5568), that an application had been filed with the U.S. Fish and Wildlife Service by the Massachusetts Division of Fisheries and Wildlife, for a permit to incidentally take, pursuant to Section 10(a)(1)(B) of the Endangered Species Act of 1973 (16 USC 1539), as amended, piping plovers (*Charadrius melodus*) on Massachusetts beaches pursuant to the implementation of the Conservation Plan for piping plovers in Massachusetts.

Notice is hereby given that on April 12, 1996, as authorized by the provisions of the Act, the Service issued a permit (PRT–813653), to the above named party subject to certain conditions set forth therein. The permit was granted only after it was determined that it was applied for in good faith, that by granting the permit it will not be to the disadvantage of the threatened species; and that it will be consistent with the purposes and policy set forth in the Endangered Species Act, as amended.

Additional information on this permit action may be requested by contacting the New England Field Office, 22 Bridge Street, Concord, New Hampshire, 03301, (603) 225–1411 between the hours of 8:00 a.m. and 4:00 p.m. weekdays.

Dated: June 14, 1996.

Cathy Short,

Deputy Regional Director, Region 5, U.S. Fish and Wildlife Service.

[FR Doc. 96–16362 Filed 6–26–96; 8:45 am]

BILLING CODE 4310–55–M

Bureau of Indian Affairs

Notice of Intent To Retract 1979 Decision of the Deputy Commissioner of Indian Affairs To Deal With the Delaware Tribe of Eastern Oklahoma Only for Claims Purposes

AGENCY: Bureau of Indian Affairs, Interior.

ACTION: Notice of proposed decision.

SUMMARY: The Assistant Secretary—Indian Affairs has determined that the position of the Department of the Interior since 1979 with the Delaware Tribe of Eastern Oklahoma merits reconsideration. In 1979 the Bureau of Indian Affairs through the Acting Deputy Commissioner determined, by letter of May 24, 1979, that the Department of the Interior would engage in government-to-government relations with the Delaware Tribe only through the Cherokee Nation and that the Department would deal directly with the Delaware Tribe only for purposes of their claims against the United States. The Delaware Tribe of Eastern Oklahoma requested that the Assistant Secretary review the 1979 determination.

A comprehensive legal review conducted by the Division of Indian Affairs, Office of the Solicitor, concludes that the 1979 determination

did not consider the entire relevant legal record and did not construe accurately the provisions of the 1866 Treaty with the Delaware and the 1867 Agreement between the Delaware and Cherokee. Based on this review, the Assistant Secretary has made a preliminary determination that the position of the Department stated in the 1979 letter should be retracted. Nothing in this preliminary decision should be construed as affecting allotments with federally imposed restrictions against alienation under the Act of August 4, 1947, 61 Stat. 731.

DATES: The public has until July 29, 1996 to comment on this preliminary decision.

FOR FURTHER INFORMATION CONTACT: Deborah Maddox, Director, Office of Tribal Services, (202) 208–3463.

SUPPLEMENTARY INFORMATION: This notice is published in the exercise of authority delegated by the Secretary of the Interior to the Assistant Secretary—Indian Affairs (ASIA) by 209 DM 8. Comments on the preliminary decision and/or requests for a copy of the Associate Solicitor Memorandum of June 19, 1996, should be addressed to the Office of the Assistant Secretary—Indian Affairs, Bureau of Indian Affairs, 1849 C Street NW., Washington, DC 20242, Attention: Office of Tribal Services, Mail Stop 4603 MIB. The final decision of the Department will follow a review of the public comments.

Dated: June 21, 1996.

Ada E. Deer,

Assistant Secretary—Indian Affairs.

[FR Doc. 96–16380 Filed 6–26–96; 8:45 am]

BILLING CODE 4310–02–P

Bureau of Land Management

[AK–962–1410–00–P; F–19155–16]

Alaska Native Claims Selection

In accordance with Departmental regulation 43 CFR 2650.7(d), notice is hereby given that a decision to issue conveyance under the provisions of Sec. 14(e) of the Alaska Native Claims Settlement Act of December 18, 1971, 43 U.S.C. 1601, 1613(e), will be issued to Doyon, Limited for approximately 35 acres. The lands involved are in the vicinity of Galena, Alaska, within T. 8 S., R. 8 E., Kateel River Meridian, Alaska.

A notice of the decision will be published once a week, for four (4) consecutive weeks, in the *Fairbanks Daily News-Miner.* Copies of the decision may be obtained by contacting the Alaska State Office of the Bureau of Land Management, 222 West Seventh Avenue, #13, Anchorage, Alaska 99513–7599 ((907) 271–5960).

Any party claiming a property interest which is adversely affected by the decision, an agency of the Federal government or regional corporation, shall have until July 29, 1996 to file an appeal. However, parties receiving service by certified mail shall have 30 days from the date of receipt to file an appeal. Appeals must be filed in the Bureau of Land Management at the address identified above, where the requirements for filing an appeal may be obtained. Parties who do not file an appeal in accordance with the requirements of 43 CFR Part 4, Subpart E, shall be deemed to have waived their rights.

Elizabeth Sherwood,

Land Law Examiner, ANCSA Team, Branch of 962 Adjudication.

[FR Doc. 96–16385 Filed 6–26–96; 8:45 am]

BILLING CODE 4310–84–p

[OR–130–1020–00; GP6–0193]

Eastern Washington Resource Advisory Council

AGENCY: Bureau of Land Management, Spokane District, Interior.

NOTICE: Notice of Meetings of the Interior Columbia Basin Ecosystem Management Project Subgroup of the Eastern Washington Resource Advisory Council, the Standards for Rangeland Health and Livestock Grazing Guidelines Subgroup of the Eastern Washington Resource Advisory Council, and the Eastern Washington Resource Advisory Council.

ACTION: Meetings of the Interior Columbia Basin Ecosystem Management Project Subgroup and the Standards for Rangeland Health and Livestock Grazing Guidelines Subgroup of the Eastern Washington Resource Advisory Council; July 18, 1996, in Spokane, Washington. Meeting of the Eastern Washington Resource Advisory Council; July 19, 1996, in Spokane, Washington.

SUMMARY: Meetings of two Subgroups of the Eastern Washington Resource Advisory Council will be held on July 18, 1996: The Interior Columbia Basin Ecosystem Management Project (ICBEMP) Subgroup, and the Standards for Rangeland Health and Livestock Grazing Guidelines (S&G) Subgroup. Both meetings will convene at 9:00 a.m., at the Bureau of Land Management, Spokane District Office, 1103 N. Fancher Road, Spokane, Washington, 99212–1275. The meetings will adjourn at approximately 4:00 p.m. or upon completion of business. At an appropriate time, the meetings will recess for approximately one hour for lunch. Public comments will be received from 10:00 a.m. until 10:30 a.m. The purpose of the ICBEMP Subgroup meeting is to discuss ICBEMP Alternatives. The purpose of the S&G Subgroup meeting is to develop recommendations to the full Council concerning Standards for Rangeland Health and Livestock Grazing Guidelines.

A meeting of the Eastern Washington Resource Advisory Council will be held on July 19, 1996. The meeting will convene at 9:00 a.m. at Cavanaughs Inn at the Park, 303 West North River Drive, Ballroom ''D'', Spokane, Washington, 99201, 509–326–8000. The meeting will adjourn at approximately 4:00 p.m. or upon completion of business. At an appropriate time, the meeting will recess for approximately one hour for lunch. Public comments will be received from 10:00 a.m. until 10:30 a.m. The purpose of meeting is to address the Interior Columbia Basin Ecosystem Management Project and to consider recommendations for Standards for Rangeland Health and Livestock Grazing Guidelines.

FOR FURTHER INFORMATION CONTACT: Richard Hubbard, Bureau of Land Management, Spokane District Office, 1103 N. Fancher Road, Spokane, Washington, 99212; or call 509–536–1200.

Dated: June 20, 1996.

Joseph K. Buesing,

District Manager.

[FR Doc. 96–16361 Filed 6–26–96; 8:45 am]

BILLING CODE 4310–33–P

[CO–934–96–1310–01; COC47017]

Colorado; Proposed Reinstatement of Terminated Oil and Gas Lease

Under the provisions of Public Law 97–451, a petition for reinstatement of oil and gas lease COC47017, Garfield County, Colorado, was timely filed and was accompanied by all required rentals and royalties accruing from April 1, 1996, the date of termination.

No valid lease has been issued affecting the lands. The lessee has agreed to new lease terms for rentals and royalties at rates of $5 per acre and 16–⅔ percent, respectively. The lessee has paid the required $500 administrative fee for the lease and has reimbursed the Bureau of Land Management for the cost of this Federal Register notice.

Having met all the requirements for reinstatement of the lease as set out in section 31 (d) and (e) of the Mineral

Leasing Act of 1920, as amended, (30 U.S.C. 188 (d) and (e), the Bureau of Land Management is proposing to reinstate the lease effective April 1, 1996, subject to the original terms and condition of the lease and the increased rental and royalty rates cited above.

Questions concerning this notice may be directed to Milada Krasilinec of the Colorado State Office (303) 239–3767.

Dated: June 17, 1996.

Milada Krasilinec,

Land Law Examiner, Oil and Gas Lease Management Team.

[FR Doc. 96–16363 Filed 6–26–96; 8:45 am]

BILLING CODE 4310–JB–M

Office of the Secretary

Statement of Findings, Implementation of the Yavapai-Prescott Indian Tribe Water Rights Settlement Act of 1994, Public Law No. 103–434

AGENCY: Office of the Secretary, Interior.

ACTION: Notice.

SUMMARY: This notice publishes the statement of findings required by the Yavapai-Prescott Indian Tribe Water Rights Settlement Act 1994.

FOR FURTHER INFORMATION CONTACT: Catherine E. Wilson, Chair, Implementation Team for the Yavapai-Prescott Indian Tribe Water Rights Settlement Act of 1994, P.O. Box 10, Phoenix, AZ 85001, (602) 379–6789.

SUPPLEMENTARY INFORMATION: It is the policy of the United States, in fulfillment of its trust responsibility to Indian Tribes, to promote Indian self-determination and economic self-sufficiency, and to settle, wherever possible, the water rights claims of Indian tribes without lengthy and costly litigation. On October 31, 1994, the Yavapai-Prescott Indian Tribe Water Rights Settlement Act of 1994, Pub. L. No. 104–434, 108 Stat. 4526, (Settlement Act) was enacted to settle the water rights claims of the Yavapai-Prescott Indian Tribe (Tribe) located in Yavapai County, Arizona. Section 112 of the Settlement Act provides that the waivers and releases of all present and future claims of water rights or injuries to water rights required to be executed by the Tribe and the United States as part of the settlement shall become effective as the date the Secretary to be published in the Federal Register a statement of findings that certain conditions, as prescribed in Section 112 (a)(1)–(4), have been met. Accordingly, in compliance with Section 112(a), the Secretary of the Interior issues the following Statement of Findings.

Statement of Findings

Pursuant to Section 112(a)(1)–(4) of the Yavapai-Prescott Indian Tribe Water Rights Settlement Act of 1994, Pub. L. No. 104–434, 108 Stat. 4526 (1994), the Secretary of the Interior hereby finds:

1. On December 27, 1995, an acceptable party, The City of Scottsdale, Arizona, executed contracts for assignments of the Tribe's CAP contract and the City of Prescott's CAP subcontract. The proceeds paid by the City of Scottsdale for such assignments were deposited into the Verde River Basin Water Fund on December 29, 1995.

2. On December 15, 1995, the stipulation of the settling parties was approved by Judgment entered by the Superior Court of Arizona, in the case titled, In re the General Adjudication of All Rights to Use Water in the Gila River System and Source.

3. The Settlement Agreement dated June 29, 1995, consistent with the terms of the Settlement Act, was executed by the Assistant Secretary for Indian Affairs, pursuant to authority delegated by the Secretary of the Interior.

4. On October 24, 1995, the contribution to the Settlement Act appropriated by the State of Arizona, in the amount of $200,000, was deposited into the Verde River Basin Water Fund.

Dated: June 17, 1996.

Ada E. Deer,

Assistant Secretary, Indian Affairs.

[FR Doc. 96–16485 Filed 6–26–96; 8:45 am]

BILLING CODE 4310–02–M

Bureau of Land Management

[UT–912–06–0777–52]

Meeting of the Utah Resource Advisory Council

AGENCY: Bureau of Land Management, Utah.

ACTION: Notice of Meeting of the Utah Resource Advisory Council.

SUMMARY: The Utah Resource Advisory Council (RAC) will meet from 9:00 a.m. to 5:00 p.m. on July 15, 1996, at the Bureau of Land Management's Utah State Office, Room 302, 324 South State Street, Salt Lake City, Utah. The entire meeting will be devoted to the preparation of draft Standards & Guidelines for grazing management. RAC meetings are open to the public. A 30-minute comment period, whereby members of the public may address the Council, is scheduled at 9:00 a.m. Any member of the public interested in addressing the Council should contact Sherry Foot, Special Programs Coordinator, (801) 539–4195, by July 10, 1996.

FOR FURTHER INFORMATION CONTACT: Sherry Foot, Utah State Office, Bureau of Land Management, 324 South State Street, Salt Lake City, 84111; phone (801) 539–4195 or 539–4021.

Dated: June 19, 1996.

David Little,

Utah BLM Associate State Director.

[FR Doc. 96–16442 Filed 6–26–96; 8:45 am]

BILLING CODE 4310–DQ–P–M

[AZ–055–96–1430–01; AZA 15957, AZA 28915, and AZA 29255]

Arizona: Notice of Realty Action

AGENCY: Bureau of Land Management, Interior.

ACTION: Classification of Public Land for Recreation and Public Purposes Leases/Conveyances, Yuma County, Arizona.

SUMMARY: The following described public land in Yuma County, within the City of San Luis, Arizona, has been examined and found suitable for classification for lease and conveyance under the Recreation and Public Purposes (R&PP) Act, as amended (43 U.S.C. 869 et seq.). Public land affected and the proposed land uses are identified as follows:

AZA 28915—San Luis Water Treatment Facility and Park

Gila and Salt River Meridian, Arizona

T. 11 S., R. 25 W.,
Sec. 1, lots 1 to 5, inclusive.
Containing 27.24 acres, more or less.

AZA 15957—San Luis Library

Gila and Salt River Meridian, Arizona

T. 11 S., R. 25 W.,
Sec. 1, north half of lot 11.
Containing 1.05 acres, more or less.

AZA 29255—Gadsden District/AWC School Facility

Gila and Salt River Meridian, Arizona

T. 11 S., R. 25 W.,
Sec. 1, lot 14, NW¼NE¼SW¼.
Containing 14.41 acres, more or less.

SUPPLEMENTARY INFORMATION: The City of San Luis (City), Arizona, and the Gadsden Elementary School District (with Arizona Western College—AWC) have filed R&PP lease and conveyance applications for parcels within the City limits. The City intends to construct a library resource center, a water treatment facility, and a park. The School District and AWC plan to construct and share a school facility which will be an expansion of the existing elementary school. This land is identified in the Yuma District Resource Management Plan, as amended, as

having potential for disposal. Lease and conveyance of the land for recreational or public purposes would be in the public interest.

Lease and conveyance, when issued, will contain the following reservations to the United States:

1. Rights-of-way for ditches and canals constructed by the authority of the United States.

2. All minerals shall be reserved to the United States, together with the right to prospect for, mine, and remove such deposits from the same under applicable law and regulations to be established by the Secretary of the Interior.

And will be subject to:

1. The provisions of the R&PP Act and all applicable regulations of the Secretary of the Interior.

2. Those rights for a public road granted to the Arizona Department of Transportation (AZPHX 78756) under the Act of July 26, 1866, Revised Statute 2477 (43 U.S.C 932).

Upon publication of this notice in the Federal Register, the land will be segregated from all forms of appropriation under the public land laws, including the general mining laws, except for lease and conveyance under the R&PP Act, leasing under the mineral leasing laws, and material disposal laws.

CLASSIFICATION COMMENTS: For a period of 45 days from the date of publication of this Notice in the Federal Register, interested parties may submit comments to the Area Manager, Yuma Resource Area Office, 2555 East Gila Ridge Road, Yuma, Arizona 85365. Comments may address the suitability of the land for a library, a school, a water treatment facility, and a park. Comments on the classification are restricted to whether the land is physically suited for the above mentioned uses, whether the use will maximize the future use or uses of the land, whether the use is consistent with local planning and zoning, or if the use is consistent with State and Federal programs.

APPLICATION COMMENTS: Interested parties may submit comments regarding the specific use proposed in the application and plan of development, whether the Bureau of Land Management followed proper administrative procedures in reaching the decision, or any other factor not directly related to the suitability of the land for a library, a school, a water treatment facility, and a park.

EFFECTIVE DATE: Any adverse comments will be reviewed by the District Manager, Yuma District Office. In the absence of any adverse comments, the classification of the land described in this Notice will become effective 60 days from the date of publication of this notice in the Federal Register. The lands will not be offered for lease and conveyance until after the classification becomes effective.

FOR FURTHER INFORMATION CONTACT: Dave Curtis, Realty Specialist, Yuma Resource Area Office, 2555 E. Gila Ridge Road, Yuma, AZ 85365, telephone (520) 317–3237.

Dated: June 14, 1996.

Maureen A. Merrell,

ADM, Administration.

[FR Doc. 96–16443 Filed 6–26–96; 8:45 am]

BILLING CODE 4310–32–P

[UT–060–06–1430–001, UTU–74116]

Notice of Realty Action; Grand County, UT

AGENCY: Bureau of Land Management, Department of Interior.

ACTION: Notice of Proposed Residential Occupancy Lease.

SUMMARY: Pursuant to Section 302 of the Federal Land Policy and Management Act of 1976 (90 Stat. 2762; 43 USC 1932), the Bureau of Land Management, Moab District, will consider leasing a parcel of public land in Grand County, Utah. Leasing of the federal land will authorize existing residential uses and improvements, and will allow the government to collect fair market rental. The land and prospective lessee area as follows:

T. 23 S., R. 24 E. Sec 18: Lot 2 (fractional)

0 .5 acres

Salt Lake Base Meridian

Prospective Lessees: Merrel and Jan Herod

SUPPLEMENTARY INFORMATION: The parcel would be offered to the present occupant for direct, noncompetitive lease, at no less than fair market rental. The size, configuration and location of the parcel limits the uses and users. The age and financial status of the prospective lessees are such that failure to issue the lease will pose significant financial hardship on the occupants.

The general terms and conditions for the lease are found at 43 CFR 2920.7. Additional terms and conditions would be added in accordance with mitigation stipulations identified in draft Environmental Assessment UT–068–95–107.

For a period of 30 days from publication of this notice, interested parties may submit comments to the Moab District Manager, 82 East Dogwood, Moab, Utah 84532. Comments will be evaluated, and the decision to issue, modify or reject the lease will be made.

FOR FURTHER INFORMATION CONTACT: Lynn Jackson, Moab District Office, 82 East Dogwood, Moab, Utah 84532, (801) 259–6111.

Dated: June 19, 1996.

Brad D. Palmer,

(Acting) District Manager.

[FR Doc. 96–16441 Filed 6–26–96; 8:45 am]

BILLING CODE 4310–DQ–P

[ID–957–1430–00]

Idaho: Filing of Plats of Survey; Idaho

The plat of the following described land was officially filed in the Idaho State Office, Bureau of Land Management, Boise, Idaho, effective 9:00 a.m. June 19, 1996.

The plat representing the dependent resurvey of portions of the subdivisional lines and subdivision of section 18, and the further subdivision of section 18, and a metes-and-bounds survey within section 18, T. 6 N., R. 34 E., Boise Meridian, Idaho, Group No. 914, was accepted, June 19, 1996.

This survey was executed to meet certain administrative needs of the Bureau of Land Management. All inquiries concerning the survey of the above described land must be sent to the Chief, Cadastral Survey, Idaho State Office, Bureau of Land Management, 3380 Americana Terrace, Boise, Idaho, 83706–2500.

Dated: June 19, 1996.

Duane E. Olsen,

Chief Cadastral Surveyor for Idaho.

[FR Doc. 96–16444 Filed 6–26–96; 8:45 am]

BILLING CODE 4310–GG–M

INTERNATIONAL TRADE COMMISSION

Sunshine Act Meeting

[USITC SE–96–13]

AGENCY HOLDING THE MEETING: United States International Trade Commission.

TIME AND DATES: July 2, 1996 at 9:30 a.m.

PLACE: Room 101, 500 E Street S.W., Washington, DC 20436.

STATUS: Open to the public.

MATTERS TO BE CONSIDERED:

1. Agenda for future meeting
2. Minutes
3. Ratification List
4. Inv. Nos. TA–201–65 and NAFTA–302–1 (Injury) (Broom Corn Brooms)—briefing and vote.
5. Inv. No. TA–201–66 (Injury) (Fresh Tomatoes and Bell Peppers) —briefing and vote.
6. Outstanding action jackets:

1. GC–96–031, Notice of amendments to Parts 201 and 207 of Rules of Practice and Procedure (Title VII matters).

In accordance with Commission policy, subject matter listed above, not disposed of at the scheduled meeting, may be carried over to the agenda of the following meeting.

By order of the Commission.

Issued: June 25, 1996.

Donna R. Koehnke,

Secretary.

[FR Doc. 96–16612 Filed 6–25–96; 2:43 pm]

BILLING CODE 7020–02–P

DEPARTMENT OF JUSTICE

Antitrust Division

United States v. Georgia-Pacific Corp.; Proposed Consent Judgments

Pursuant to the Antitrust Procedures and Penalties Act, 15 U.S.C. § 16(c)–(h), the United States publishes below the comment received on the proposed final judgment in *United States* v. *Georgia-Pacific Corp.*, Civil Action No. 96–164, filed in the United States District Court for the District of Delaware, together with the United States' response to that comment.

Copies of the comment and response to comment are available for inspection and copying in Room 207 of the U.S. Department of Justice, Antitrust Division, 325 7th Street, N.W., Washington, D.C. 20530 (telephone: (202) 514–2481), and at the office of the Clerk of the United States District Court for the District of Delaware. Copies of these materials may be obtained upon request and payment of a copying fee.

Constance K. Robinson,

Director of Operations.

June 7, 1996.

Morgan A. Chivers,

Chairman of the Board and Chief Operating Officer, Continental Gypsum Company, 265 Distribution Street, Port Newark, New Jersey 07114

Re: United States v. Georgia-Pacific Corporation, *Civil Action No. 96–164 (D. Del., March 29, 1996)*

Dear Mr. Chivers: This letter responds to your letters dated April 30, 1996 and May 21, 1996 commenting on the proposed Final Judgment in the above-referenced antitrust case, which challenges the acquisition of the gypsum business of Domtar Inc. (''Domtar'') by Georgia-Pacific Corporation (''GP''). The Complaint alleges that the acquisition violates Section 7 of the Clayton Act, 15 U.S.C. § 18, because its effects may be to lessen substantially competition in the production and sale of gypsum board in the Northeast Region of the United States. As defined in the Complaint, the Northeast Region encompasses the twelve eastern seaboard states from Maine through Virginia and Washington, D.C. Under the proposed Final Judgment, GP is required to divest to one or more purchasers its Buchanan, New York and Wilmington, Delaware gypsum board plants and related tangible and intangible assets. GP must accomplish the divestitures within 150 calendar days after the date on which the proposed Final Judgment was filed (March 29, 1996).

In your April 30 letter, you noted that Continental Gypsum Company is a small independent gypsum board manufacturer which commenced production on August 23, 1995 and did not obtain expected levels of production and sales until April 1996. You expressed two concerns about the provisions on the proposed Final Judgment. One concern arises from the requirement that GP ''use all reasonable efforts to maintain and increase sales of gypsum board'' at the Buchanan and Wilmington plants until the divestitures of these facilities have been accomplished. GP also is required to ''maintain at 1995 or previously approved levels, whichever are higher, promotional, advertising, sales, marketing and merchandising support'' for gypsum board sales at these two plants. You believe that complying with these provisions could have a ''predatory'' effect on Continental and possibly force Continental out of the market, particularly if demand stays the same or falls in 1996.

We do not believe these provisions will have an adverse effect on competition in the gypsum wallboard market. The provision were intended to prevent GP from taking any actions that might jeopardize the competitive viability of the Buchanan and Wilmington plants pending divestiture. To ensure continued viability, GP must use all ''reasonable efforts'' to maintain sales at existing levels or to increase sales during the divestiture period. This requirement imposes no greater obligation on GP than could reasonably be expected if the plants were not candidates for divestiture. Moreover, Continental could reasonably anticipate that any prospective purchaser would operate the Buchanan and Wilmington plants in a similar manner after the divestiture period. Thus, any loss of sales by Continental from operating the plants in the manner required by the proposed Final Judgment would result from competitive, not anticompetitive, forces.

Your second concern arises from the requirement that GP, at the option of the purchaser or purchasers, enter into a supply contract for gypsum rock and/or gypsum linerboard paper sufficient to meet all or part of the capacity requirements of the Buchanan and Wilmington plants over a period up to ten (10) years. The proposed final Judgment expressly provides that the terms and conditions of any such supply contract ''must be related reasonably to market conditions for gypsum rock and/or gypsum linerboard paper.'' You noted that Continental currently purchases some of its paper requirements from GP and that it views GP as a potential source of its gypsum rock requirements. You are concerned that the supply contracts provided for in the Final Judgment will ''seriously restrict'' Continental's ability to source these vital raw materials.

We do not believe that the supply contracts mandated in the Final Judgment would have any adverse competitive effect on Continental, should a purchaser or purchasers elect to negotiate such contracts with GP. As an initial matter, it should be noted that GP currently is supplying the Buchanan and Wilmington plants with gypsum rock and linerboard paper and (presumbly) would continue to do so in the absence of the Department's challenge to the Domar acquisition. Thus, allowing the purchaser or purchasers of these facilities to contract for a long-term source of these raw materials from GP would not mean that the amount of such materials GP has available to sell to others in the industry would be any less than would otherwise be the case. Moreover, should GP decide to sue its own resources to supply gypsum rock and paper to the two Domtar facilities that it is acquiring in the Northeast Region—Domtar's Newington, New Hampshire and Camden, New Jersey plants— the gypsum rock and paper that presently are being supplied to these facilities from third party sources would become available on the market. Accordingly, there is no net reduction in gypsum rock or paper available to the industry as a result of GP entering into supply contracts for the Buchanan and/or Wilmington plants, and the ability to enter into these contracts, if needed, should greatly facilitate the divestiture of the two plants. In addition, it is important to recognize that the supply contracts provided for in the Final Judgment will be the result of arms-length negotiations reflecting market conditions; it is unlikely, in these circumstances, that the purchaser or purchasers will gain undue advantage over other market participants as a result of these contracts.

We appreciate you bringing your concerns about the proposed Final Judgment to our attention and hope that the foregoing analysis has helped to alleviate them. While we understand your position, we believe that the proposed Final Judgment offers the best feasible solution to the anticompetitive effects posed by GP's acquisition of Domtar's gypsum business in the Northeast Region. Pursuant to the Antitrust Procedures and Penalities Act, a copy of your letters and this response will be published in the Federal Register and filed with the Court.

Sincerely,

J. Robert Kramer, II

Chief, Litigation II Section.

May 21, 1996.

Mr. J. Robert Kramer,

Litigation II Section, Antitrust Division, U.S. Department of Justice, 1401 H St., N.W., Suite 3000, Washington D.C. 20530.

Re: U.S.A. v. Georgia Pacific Corporation Civil Action No.: 96–164.

Dear Mr. Kramer: This letter shall serve as additional comments of the Continental Gypsum Company comment letter to you of April 30, 1996:

In the April 30, 1996 letter we expressed our fear that the Final Judgment mandate that Georgia Pacific maintain or increase sales and production to 1995 levels would cause predatory actions by Georgia Pacific against

Continental Gypsum Company, that now appears to be the case

In the past 45 days we have had extreme pressure to lower pricing levels to distributors in our prime market area. While the pricing at our outer sales regions i.e., Maryland, Virginia, Delaware, western Pennsylvania, have been relatively strong, the New Jersey and Metropolitan New York are off significantly. In each and every case, we find we must meet a Georgia Pacific price to maintain a reasonable level of business. Continental Gypsum is clearly being targeted by Georgia Pacific. Further, it is our opinion that Georgia Pacific has been caused to such action by reason of the Final Judgment mandate that they maintain a level of business that totally ignores consideration that a new competitor (Continental Gypsum) is now in the market.

The allegations that are made here can be documented and will be documented at your request.

Again, I would request that you give consideration to our recommendation to amend the Final Judgment as proposed in our April 30, letter. For Continental Gypsum to remain viable we must have some relief from this matter.

Respectfully,

Morgan A. Chivers,

Chairman of the Board & C.O.O.

Rhyne Simpson, Jr.,

President.

April 30, 1996.

Mr. J. Robert Kramer,

Litigation II Section, Antitrust Division, U.S. Department of Justice, 1401 H St., N.W., Suite 3000, Washington, D.C. 20530.

Re: U.S.A. v. Georgia Pacific Corporation Civil Action No.: 96–164.

Dear Mr. Kramer: The following are the comments of Continental Gypsum Company relating to the above referenced case:

Background

Continental Gypsum Company is the only small independent manufacturer of gypsum wallboard in the United States. The Company was formed January 26, 1995 to lease the former Atlantic Gypsum Company facility located at Port Newark, New Jersey. The plant had been idled for approximately six years as a result of bankruptcy and foreclosure proceedings. The founders of Continental Gypsum are Morgan A. Chivers and Rhyne Simpson, Jr. both of whom are its major stockholders. About thirty (30) percent of the outstanding stock is owned by wallboard distributors and applicators from the region. After a rather lengthy negotiation with the Port Authority of NY&NJ, Continental Gypsum gained occupancy of the facility on June 1, 1995. Production commenced on August 23, 1995 and the gypsum wallboard is marketed in the region under the trade name MoreRock. Because of numerous engineering deficiencies with the plant equipment and the unusually harsh winter, the plant did not obtain expected levels of production and sales until late April 1996. (see attached shipping report)

Comments

Continental Gypsum finds two major mandates in the Final Judgment that are onerous and do in fact threaten the viability of this new company. They are as follows:

IX. PRESERVATION OF ASSETS—page 14 paragraph B ''Defendant shall use all reasonable efforts to maintain and increase sales of gypsum board produced at its Buchanan and Wilmington plants, and defendant shall maintain at 1995 or previously approved levels, whichever are higher,'' * * * This mandate obviously ignores the additional capacity that Continental Gypsum has brought to the region. It is not possible that Continental could bring at least 270,000 MSF of supply into the market without competitors giving up a portion of their market share. The Buchanan and Wilmington plants are in fact situated in the heart of Continentals prime market. The mandate that they maintain sales at 1995 levels, or higher, basically implies that there is no room in the market for Continental.

IV. DIVESTITURES—page 5, paragraph A. sub. (iii) ''at the option of the purchaser or purchasers, enter into a supply contract for gypsum rock (which may or may not include transportation) and/or gypsum linerboard paper sufficient to meet all or part of the capacity requirements of the Buchanan and Wilmington plants over a period up to (10) years; '* * * Continental currently purchases some of its linerboard paper from Georgia Pacific's Delair, N.J. papermill. Additionally, Georgia Pacific is considered to be a primary source of gypsum ore and in fact did quote on our ore requirements for the 1996 calendar year. The mandate that Georgia Pacific provide the purchaser(s) with supply contracts for the gypsum rock and gypsum linerpaper will seriously restrict Continentals ability to source these vital raw materials both in in the present and in the future.

Summation

The overall thrust of the Final Judgment appears to be concerning the concentration of supply with only a few manufactures within the region. While the concentration of supply should be of concern, the far more important factor influencing competitive pricing is the fundamental law of supply relative to demand. This is clearly evidenced by the fact that prices eroded up to $15.00/MSF within the first three months of Continental's entry into the market. In fact, Continental Gypsum is the only player that brings new supply into the region. The divestiture of Buchanan and Wilmington does nothing towards creating more supply. A more compelling case can be made that if Continental Gypsum is forced into closure that the consumer would be damaged far more than the creation of change of ownership of two plants.

It is further our concern that the Final Judgment gives Georgia Pacific license to become predatory against Continental and if Continental is forced to closure, then the Buchanan and Wilmington plants will have more value as a result of the divestiture mandate.

In conclusion, for the aforementioned reasons, we believe that the Final Judgment be amended by:

(1) Rescinding the mandate that Georgia Pacific maintain 1995 levels of sales (or higher) during the 150 day divestiture period. The only mandate should be that Georgia Pacific should not be allowed to transfer any sales from Buchanan and Wilmington to their other plants, namely Camden, N.J. and the Newington, N.H.

(2) Continental Gypsum should be afforded the same opportunity to negotiate supply agreements with Georgia Pacific for the purchase of gypsum ore and gypsum linerpaper on an equal basis of the purchaser(s) of the Buchanan and Wilmington plants.

Thank you very much for your consideration in this matter.

Respectfully,

Morgan A. Chivers,

Chairman of the Board & C.O.O.

Rhyne Simpson, Jr.,

President.

Justin M. Dempsey.

The attached document was not able to be published in the Federal Register. A copy can be obtained from the U.S. Department of Justice, Legal Procedures Office at 325 7th Street, N.W., Room 215, Washington, D.C. 20530 (telephone: 202–514–2481).

[FR Doc. 96–16445 Filed 6–26–96; 8:45 am]

BILLING CODE 4410–01–M

DEPARTMENT OF LABOR

Office of the Secretary

Submission for OMB Review; Comment Request

June 21, 1996.

The Department of Labor (DOL) has submitted the following public information collection request (ICR) to the Office of Management and Budget (OMB) for review and approval in accordance with the Paperwork Reduction Act of 1995 (Pub.L. 104–13; 44 U.S.C. Chapter 35). A copy of this individual ICR, with applicable supporting documentation, may be obtained by calling the Department of Labor Acting Departmental Clearance Officer, Theresa M. O'Malley ([202] 219–5095). Individuals who use a telecommunications device for the deaf (TTY/TDD) may call [202] 219–4720 between 1:00 p.m. and 4:00 p.m. Eastern time, Monday through Friday.

Comments should be sent to Office of Information and Regulatory Affairs, Attn: OMB Desk Officer for Departmental Management, Office of Management and Budget, Room 10235, Washington, DC 20503 ([202] 395–7316), within 30 days from the date of this publication in the Federal Register.

The OMB is particularly interested in comments which:

• Evaluate whether the proposed collection of information is necessary

for the proper performance of the functions of the agency, including whether the information will have practical utility;

• Evaluate the accuracy of the agency's estimate of the burden of the proposed collection of information, including the validity of the methodology and assumptions used;

• Enhance the quality, utility, and clarity of the information to be collected; and

• Minimize the burden of the collection of information on those who are to respond, including through the use of appropriate automated, electronic, mechanical, or other technological collection techniques or other forms of information technology, e.g., permitting electronic submission of responses.

Agency: Departmental Management—Chief Financial Officer.

Title: Disclosure of Information to Credit Reporting Agencies; Administrative Offset, Interest, Penalties and Administrative Costs.

OMB Number: 1225–0030.

Affected Public: Individuals or households; Business or other for-profit; Not-for-profit institutions; Farms; Federal Government.

Cite/reference	Total respondents	Frequency	*Total responses	Average time per response	Burden
29 CFR 20.7	2,000	On occasion	2,000 (×2)	1.75 hours	7,000 hours.
29 CFR 20.25	500	On occasion	500 (×2)	1.75 hours	1,750 hours.
29 CFR 20.61	1,000	On occasion	1,000 (×2)	1.75 hours	3,500 hours.
Totals	3,500		3,500 (×2)		12,250 hours.

Total Annualized capital/startup costs: 0.

Total annual costs (operating/maintaining systems or purchasing services): 0.

Description: This information is collected from debtors to assist in determining whether an individual or organization is actually indebted to the Department of Labor, and if so indebted, to evaluate the individual's or organization's ability to repay the debt.

Theresa M. O'Malley,

Acting Departmental Clearance Officer.

[FR Doc. 96–16456 Filed 6–26–96; 8:45 am]

BILLING CODE 4510–23–M

Employment and Training Administration

Labor Surplus Area Classification Under Executive Orders 12073 and 10582; Notice to Addition to the Annual List of Labor Surplus Areas

AGENCY: Employment and Training Administration, Labor.

ACTION: Notice.

DATES: This addition to the annual list of labor surplus area is effective June 1, 1996.

SUMMARY: The purpose of this notice is to announce an addition to the annual list of surplus areas.

FOR FURTHER INFORMATION CONTACT: William J. McGarrity, Labor Economist, USES, Employment and Training Administration 200 Constitution Avenue, NW., Room N–4470, Attention: TEESS, Washington, DC 20210. Telephone: 202–219–5185, ext. 129.

SUPPLEMENTARY INFORMATION: Executive Order 12073 requires executive agencies to emphasize procurement set-asides in labor surplus areas. The Secretary of Labor is responsible under that Order for classifying and designating areas as labor surplus areas. Executive agencies should refer to Federal Acquisition Regulation Part 20 (48 CFR Part 20) in order to assess the impact of the labor surplus area program on particular procurements.

Under Executive Order 10582 executive agencies may reject bids or offers of foreign materials in favor of the lowest offer by a domestic supplier, provided that the domestic supplier undertakes to produce substantially all of the materials in areas of substantial unemployment as defined by the Secretary of Labor. The preference given to domestic suppliers under Executive Order 10582 has been modified by Executive Order 12260. Federal Acquisition Regulation Part 25 (48 Part 25) implements Executive Order 12260. Executive agencies should refer to Federal Acquisition Regulation Part 25 in procurements involving foreign businesses or products in order to assess its impact on the particular procurements.

The Department of Labor regulations implementing Executive Orders 12073 and 10582 are set forth at 20 CFR Part 654, Subparts A and B. Subpart A requires the Assistant Secretary of Labor to classify jurisdictions as labor surplus areas pursuant to the criteria specified in the regulations and to publish annually a list of labor surplus areas. Pursuant to those regulations the Assistant Secretary of Labor published the annual list of labor surplus areas on October 12, 1995, (60 FR 53208).

Subpart B of Part 654 states that an area of substantial unemployment for purposes of Executive Order 10582 is any area classified as a labor surplus area under Subpart A. Thus, labor surplus areas under Executive Order 12073 are also areas of substantial unemployment under Executive Order 10582.

The area described below has been classified by the Assistant Secretary as a labor surplus area pursuant to 20 CFR 654.5(b) (48 FR 165615 April 12, 1983) and is effective June 1, 1996.

The list of labor surplus areas is published for the use of all Federal agencies in directing procurement activities and locating new plants or facilities.

ADDITION TO THE ANNUAL LIST OF LABOR SURPLUS AREAS

[June 1, 1996]

Labor surplus areas	Civil jurisdictions included
Washington:	
Richland-Kennewick-Pasco Metropolitan Statistical Area (MSA).	Benton County. Franklin County.

Signed at Washington, DC on June 20, 1996.

Timothy M. Barnicle,

Assistant Secretary.

[FR Doc. 96–16457 Filed 6–26–96; 8:45 am]

BILLING CODE 4510–30–M

Employment Standards Administration

Proposed Collection; Comment Request

ACTION: Notice.

SUMMARY: The Department of Labor, as part of its continuing effort to reduce paperwork and respondent burden,

conducts a preclearance consultation program to provide the general public and Federal agencies with an opportunity to comment on proposed and/or continuing collections of information in accordance with the Paperwork Reduction Act of 1995 (PRA95) [44 U.S.C. 3506(c)(2)(A)]. This program helps to ensure that requested data can be provided in the desired format, reporting burden (time and financial resources) is minimized, collection instruments are clearly understood, and the impact of collection requirements on respondents can be properly assessed. Currently, the Employment Standards Administration is soliciting comments concerning the proposed extension collection of Form LS–1, Request For Examination and/or Treatment.

A copy of the proposed information collection request can be obtained by contacting the office listed below in the addressee section of this notice.

DATES: Written comments must be submitted to the office listed in the addressee section below on or before September 4, 1996. The Department of Labor is particularly interested in comments which:

- Evaluate whether the proposed collection of information is necessary for the proper performance of the functions of the agency, including whether the information will have practical utility;
- Evaluate the accuracy of the agency's estimate of the burden of the proposed collection of information, including the validity of the methodology and assumptions used;
- Enhance the quality, utility and clarity of the information to be collected; and
- Minimize the burden of the collection of information on those who are to respond, including through the use of appropriate automated, electronic, mechanical, or other technological collection techniques or other forms of information technology, e.g., permitting electronic submissions of responses.

ADDRESSES: Mr. Rich Elman, U.S. Department of Labor, 200 Constitution Ave., N.W., Room S–3201, Washington, D.C. 20210, telephone (202) 219–6375 (this is not a toll-free number), fax 202–219–6592.

SUPPLEMENTARY INFORMATION:

I. Background

The Longshore and Harbor Workers' Compensation Act provides benefits to workers injured in maritime employment area customarily used by an employee in loading, unloading, repairing or building a vessel. Under Section 702.419 of the Act the employer/insurance carrier is responsible for furnishing medical care for the injured employee for such period of time as the injury or recovery period may require. Form LS–1 serves two purposes: it authorizes the medical care and provides a vehicle for the treating physician to report the findings, treatment given, and anticipated physical condition of the employee.

II. Current Actions

The Department of Labor seeks extension approval to collect this information to carry out its responsibility to verify that proper medical treatment has been authorized and to determine the severity of a claimant's injuries and entitlement to compensation benefits which an employer is responsible by law to provide if a claimant is medically unable to work as a result of a work-related injury. If the information were not collected, verification of authorized medical care and entitlement to compensation benefits would not be possible.

Type of Review: Extension.

Agency: Employment Standards Administration.

Title: Request For Examination and/or Treatment, LS–1.

OMB Number: 1215–0066.

Affected Public: Individuals or households.

Total Respondents: 16,500.

Frequency: On occasion.

Total Responses: 132,000 (average of 8 per respondent).

Average Time Per Response for Reporting: 1 hour.

Estimated Total Burden Hours: 142,560.

Total Burden Cost (capital/startup): $0.

Total Burden Cost (operating/maintenance): $46,000.

Comments submitted in response to this notice will be summarized and/or included in the request for Office of Management and Budget approval of the information collection request; they will also become a matter of public record.

Dated: June 21, 1996.

Cecily A. Rayburn,

Director, Division of Financial Management, Office of Management, Administration and Planning, Employment Standards Administration.

[FR Doc. 96–16458 Filed 6–26–96; 8:45 am]

BILLING CODE 4510–27–M

Occupational Safety and Health Administration

NACOSH HazCom Workgroup Meeting

Notice is hereby given that a workgroup of the National Advisory Committee on Occupational Safety and Health (NACOSH), established under section 7(a) of the Occupational Safety and Health Act of 1970 (29 U.S.C. 656) to advise the Secretary of Labor and the Secretary of Health and Human Services on matters relating to the administration of the Act, will meet on July 23 in N4437 B–D in the Department of Labor Building located at 200 Constitution Avenue NW, Washington, DC. If necessary, the meeting will be continued on July 24 in the same location. This meeting, which is open to the public, will run from 10:00 am to approximately 4:00 pm the first day and, if necessary, from 8:30 am to no longer than 3:00 pm the second day.

The Occupational Safety and Health Administration (OSHA) asked NACOSH to form a workgroup to identify ways to improve chemical hazard communication and the right-to-know in the workplace. OSHA asked the Committee to provide OSHA with recommendations related to simplification of material safety data sheets, reducing the amount of required paperwork, improving the effectiveness of worker training, and revising enforcement policies so that they focus on the most serious hazards.

It is intended that this will be the final meeting of this workgroup. The entire meeting will be devoted to review and finalization of the content of its report and recommendations. This will involve making any necessary changes and obtaining concurrences of workgroup members. This report will then be transmitted to the full National Advisory Committee on Occupational Safety and Health for its action and submission to the Occupational Safety and Health Administration.

Written data, views or comments for consideration by the workgroup may be submitted, preferably with 20 copies, to Joanne Goodell at the address provided below. Any such submissions will be provided to the members of the Workgroup and will be included in the record of the meeting. However, at this point they will not have any impact on the report. Individuals with disabilities who need special accommodations should contact Tom Hall (202–219–8615) a week before the meeting.

For additional information contact: Joanne Goodell, Directorate of Policy, Occupational Safety and Health Administration, Room N–3641, 200

Constitution Avenue, NW, Washington, DC, 20210, telephone (202) 219–8021, extension 107.

Signed at Washington, D.C. this 21st day of June, 1996.

Joseph A. Dear,

Assistant Secretary of Labor.

[FR Doc. 96–16455 Filed 6–26–96; 8:45 am]

BILLING CODE 4510–26–M

NATIONAL INSTITUTE FOR LITERACY

Agency Information Collection Activities Under OMB Review

AGENCY: National Institute for Literacy.

ACTION: Notice.

SUMMARY: In compliance with the Paperwork Reduction Act (44 U.S.C. 3501 et seq) this notice announces an Information Collection Request (ICR) by the National Institute for Literacy (NIFL). The ICR includes the full text of the ICR in order to facilitate respondents evaluating the nature of the information collection and its expected cost and burden. This is not a solicitation for applicants; it is an early notification of the types of information that the NIFL intends to collect. The ICR document is currently under review at OMB, and may be modified in response to that review.

DATES: Comments must be submitted July 29, 1996.

FOR FURTHER INFORMATION CONTACT: Sondra Stein at (202) 632–1508 or e-mail: sstein@nifl.gov

SUPPLEMENTARY INFORMATION:

Title: Applicantion for Adult Learning System Reform and Improvement Grant: Stage II Collaborative Development of Equipped for the Future (EFF) Adult Literacy Standards cooperative agreements.

Abstract: The National Literacy Act of 1991 established the National Institute for Literacy and required that the Institute conduct basic and applied research and demonstrations on literacy, collect and disseminate information of Federal, State and local entities with respect to literacy; and improve and expand the system for delivery of literacy services. This form will be used by individual public and private nonprofit organizations and agencies that represent key literacy consumer, practitioner, provider, administrator, and funded constituencies; and consortia of such organizations and agencies operating at a state, regional (multi-state), or national level. These individuals and organizations may apply for funding to continue development of the framework for voluntary adult literacy standards currently being developed by the NIFL Equipped for the Future grantees. Evaluations to determine successful applications will be made using the published criteria. The Institute will use this information to make a maximum of three cooperative agreement awards for a period of up to 3 years.

Burden Statement: The burden for this collection of information is estimated at 80 hours per response. This estimate includes the time needed to review instructions, complete the form, and review the collection of information.

Respondents: Individual public and private non-profit organizations and agencies that represent key literacy consumer, practitioner, provider, administrator, and funded constituencies; and consortia of such organizations and agencies operating at a state, regional (multi-state), or national level.

Estimated number of Respondents: 10.

Estimated Number of Responses Per Respondent: 1.

Estimated Total Annual Burden on Respondents: 800.

Frequency of Collection: One time.

Send comments regarding the burden estimate or any other aspect of the information collection, including suggestions for reducing the burden to: Sondra Stein, National Institute for Literacy, 800 Connecticut Avenue, NW, Suite 200, Washington, DC 20006, and the Office of Information and Regulatory Affairs, Office of Management and Budget, Attn: Docket Library, Room 10102, 726 17th Street, NW, Washington, DC 20503.

Draft Solicitation of Grant Applications

Title: Applicantion for Adult Literacy System Reform and Improvement Grant: Collaborative Development of Equipped for the Future Adult Literacy Standards.

Agency: The National Institute for Literacy.

Action: Notice.

Summary: The National Institute for Literacy invites applications for grants to support standards development and consensus-building. These grants are the third phase of a four-phased initiative whose ultimate goal is to reform and improve America's adult learning systems in order to enhance progress toward National Education Goal 6. This goal will be achieved through the development of voluntary content standards that communicate a new vision for what adults need to know and be able to do in their roles as citizens, worker, and parent/family member and the building of consensus about these standards among key constituencies at the grassroots, state, and national levels.

Date: Applicantions must be received by 4:30 p.m., September 6, 1996.

Note to Applicants: This notice is a complete application package. Together with the NIFL Equipped for the Future Orientation Package, and the statute authorizing the program and applicable regulations governing the program, including the Education Department General Administrative Regulations (EDGAR), this notice contains all the information, application forms, regulations and instructions needed to apply for a grant under this competition.

For Further Information Contact: Sandra Stein, National Institute for Literacy, 800 Connecticut Avenue, NW, Suite 200, Washington, DC 20006 TEL: 202–632–1508; Fax 202–632–1512.

Supplementary Information

Definitions: For purposes of this notice, the following definitions apply:

''Literacy'' is an individual's ability to read, write, and speak in English, and compute and solve problems at levels of proficiency necessary to function on the job and in society, to achieve one's goals and develop one's knowledge and potential (as stated in the National Literacy Act of 1991).

''Adult Literacy System'' means all individuals, programs, and organizations that are involved, directly and indirectly, in the delivery of literacy and basic skills services to adults. This includes, but is not limited to, people and groups involved in literacy policymaking, research and development, technical assistance, and service delivery.

''Adult Roles'' mean the following three major arenas of adult life and the obligations that pertain to each:

- Parent/family member.
- Citizen.
- Worker.

''Constituencies'' are national, state or local organizations (in the public, nonprofit, and private sectors) that have a stake in developing standards for the relevant role because the quality of role performance impacts their organization's achievement of its goals/mission.

''Consensus-building'' includes the development of a convincing public argument for the use of ''Equipped for the Future'' standards by key constituencies and the conscious, ongoing effort to expand the number of individuals from key constituencies involved in standards development use, marketing and dissemination and to leverage key segments of the workforce development system to use the standards at the national, state and local levels.

''Content Standards'' are specific descriptions of what adults need to know and be able to do to perform the key activities identified in the standards framework.

''Generative skills'' are skills or knowledge that are core to the performance of a wide range of tasks found in multiple roles and that are durable over time in face of changes in technology, work processes, and occupational demand.

''National Policy Group'' is the body of nationally-recognized leaders in literacy and workforce development that provide policy guidance and consensus-building support to the EFF initiative.

''Performance Indicators'' are descriptions of how achievement of the content standards will be demonstrated. They reflect the consensus of key stakeholders identified for the role being addressed.

''Planning Grant Recipients'' are the eight projects that were funded to complete Phase 2 of the ''Equipped for the Future'' initiative. These grants end September 30, 1996.

''Purposes for Literacy,'' based on NIFL's survey of adult learners, mean the following four general purposes that literacy serves in helping adults fulfill their roles:

- Providing access to information so adults can orient themselves in the world.
- Enabling adults to give voice to their ideas and have an impact on the world around them.
- Enabling adults to make decisions and act independently, without needing to rely on others.
- Building a bridge to the future by laying a foundation for continued learning, so adults can keep up with the world as it changes.

The EFF ''Standards Framework'' identifies, for each of the three adult roles, the broad areas of responsibility and key activities related to the four purposes for literacy for which standards will be developed. The standards framework is:

(1) Based on a coherent theory of adult learning; (2) communicates what customers, investors, and partners can expect from the adult literacy system; and (3) is explicitly linked to other standards development and implementation efforts.

''Validation'' demonstrates the degree to which the standards are representative of the important aspects of role performance.

''Workforce Development System'' is the sum of the myriad of public and private programs that are linked by their focus on building the skills and knowledge of youth and adults including: adult literacy programs, welfare-to-work programs, vocational education and training programs, school-to-work programs, industry-based skill standards programs, K–12 education programs, postsecondary education, Job Training Partnership Act programs, community college/postsecondary education programs, employer-sponsored training programs, apprenticeship programs, one-step career centers, dislocated worker programs and related programs in the public, private, and nonprofit sectors.

Background

The National Institute for Literacy (NIFL), was created by the National Literacy Act of 1991 to provide a national focal point for literacy activities and to facilitate the pooling of ideas and expertise across a fragmented field. NIFL is authorized to carry out a wide range of activities that will improve and expand the system for delivery of adult literacy services nationwide.

In the first phase of this initiative, the NIFL developed a common framework of four fundamental purposes for literacy that emerge from the writing of 1,500 adults in literacy programs nationwide. As detailed in the NIFL report, Equipped for the Future: A Customer Driven Vision for Adult Literacy and Lifelong Learning, these four purposes are to—

- gain access to information so adults can orient themselves in the world;
- give voice to ideas, so that they will be heard and can have an impact on the world around them;
- make decisions and act independently;
- build a bridge to the future, by learning how to learn in order to keep up with the world as it changes.

In October, 1995 the NIFL awarded eight one-year planning grants as the second phase of this multi-year initiative to assure that adults are ''equipped for the future.'' These planning grants resulted in a draft definition of a standards framework that defines what adults need to know and be able to do to be effective in their roles as parent/family member, worker, and citizen. The grantees, working with NIFL and its National Policy Group, also developed a common definition of the system reform to be achieved through the Equipped for the Future initiative.

This solicitation of grant applications addresses the third project phase: standards development and consensus-building. This phase of the Equipped for the Future initiative will serve as a strong foundation for national reform of the adult education services and the basis for an effective national system of workforce development. To achieve this end, this phase of the Equipped for the Future initiative will be developed in partnership with the following Federal agencies: the U.S. Department of Labor, Employment and Training Administration, for the role of worker; the U.S. Department of Education, Office of Elementary and Secondary Education, for the role of parent/family member.

Eligible Applicants: Applications will be accepted from—

Consortia of public and private for-profit and not-for-profit organizations and agencies that meet the following criteria: (a) operate at a state, regional (multi-state) or national level; (b) include literacy consumer, practitioner, provider, administrator, and funder constituencies; and (c) include technical experts in standards development and assessment. While such consortia may include for-profit organizations, no grant will be made to a for-profit organization.

Deadline for Transmittal of Applications: September 6, 1996.

Available Funds: $600,000.

Estimated Number of Awards: Three; one award for each of the three roles (citizen, parent/family member, worker).

Estimated Amount of Each Award: up to $200,000.

Project Period: One year, with an option to renew for up to two additional project years. Funds awarded are for the first year only.

Description of Program: Consortia receiving a grant under this program shall launch a standards development and consensus-building initiative to provide a solid foundation for comprehensive, collaborative system reform and improvement. This program represents the third phase of a four-phase initiative.

- Phase 1: Survey of 1,500 adult learners to identify what they need to know and be able to do to be equipped for the future.
- Phase 2: Planning grants to eight organizations and consortia of organizations to build a consensus vision of the four purposes as they relate to the adult roles of parent/family member, citizen, and worker. The result of this phase will be a common framework of what an adult needs to know and be able to do in each of the key roles, and a common vision of system reform.
- Phase 3: Further development and refinement of the Equipped for the Future standards framework, resulting in:

—Development and validation of content standards for each adult role

—Development and validation of performance indicators for each standard
—Pilot implementation of the standards in adult education delivery systems
—Building the support of key constituencies for the standards and their use

• Phase 4: Implement system reform initiatives that are based on the Equipped for the Future Standards.

The overall purposes of the Equipped for the Future initiative are to:

• Develop a new customer-driven definition of adult literacy that demystifies the route to success in our society for adult learners and clarifies the contributions of the field of adult literacy.

• Engage broad-based support among key constituencies for a system of workforce development that effectively links literacy with industry skill standards and K–12 academic standards as well as provides a common framework for skills development across myriad and diverse programs.

• Develop a set of voluntary national standards that show the portability of skills across the three adult roles and make clear the knowledge and skills adults need to be ''equipped for the future.''

The specific objectives for grantees funded for Phase 3 of the EFF initiative are to: (1) Build consensus at the national, state, and local levels for the EFF vision, standards framework, and the standards relevant to the role addressed in the grantee's application; (2) Develop and validate the content standards and performance indicators for the role addressed by the grantee, working in collaboration with the National Institute for Literacy, its Federal partners in this initiative, and the other grantees; (3) Collaborate with the National Institute for Literacy, its Federal partners, and the other grantees to create a national framework for reform of the adult education and training delivery systems.

During the grant period—October 1, 1996 to September 30, 1997, grantees will engage in the following activities:

1. Establish a national project advisory group that is representative of the key constituencies for the role addressed by the grant applicant and that also includes technical expert(s) in standards development and assessment. The project advisory group shall meet no less than three times per year and be comprised of individuals who legitimately represent a key constituency whose buy-in is critical to achieving widespread acceptance of the standards. The project advisory group members shall represent national, state, and grassroots constituencies (both organizations and individuals) and be charged with ensuring buy-in and formal approval of the draft standards by the constituency they represent. While project advisory group membership will vary from role to role (see #3 below), all groups shall include representatives of adult learners and practitioners.

2. Work in collaboration with the other two grantees, and NIFL, its Federal partners, and the Equipped for the Future National Policy Group, to refine the common standards framework for Equipped for the Future using the framework developed in the second phase of the EFF initiative. The framework will ensure that the standards for each role share a common format and structure, and that skills common to more than one role are clearly identified. The standards framework and the resulting standards shall build upon a thorough familiarity with related standards development efforts including: the SCANS/NJAS (the Secretary's Commission on Achieving Necessary Skills/the National Job Analysis Study) and O*NET initiatives, U.S. Department of Labor; the work of the National Skill Standards Board and other national skill standard initiatives; The New Standards Project and related academic content standards; and other efforts to identify appropriate performance results from learning, such as the NIFL Performance Measurement Reporting Improvement Systems (PMRIS) initiative and the work of the National Association of State Directors of Adult Education to identify performance outcomes for adult education. This work will result in a common EFF standards framework by January 1997.

3. Develop content standards with related performance indicators of what adults need to know and be able to do for one of the three adult roles: parent/family member, citizen or worker. The content standards and performance indicators shall be based on the standards framework developed in the second phase of the Equipped for the Future initiative and shall be consistent with the four purposes identified in the first phase. The content standards will show for each role: the broad areas of responsibility for the role, the key activities within those areas of responsibility, and what adults need to know and be able to do to perform the key activities. The content standards for each role will build on key documents and major initiatives supported by NIFL's Federal partner for that role, including: for the role of worker, the U.S. Department of Labor; for the roles for parent/family member and citizen, the U.S. Department of Education.

These standards will be developed within the common framework jointly developed by the three grantees and NIFL with the guidance of NIFL's Federal partners and its National Policy Group through ongoing collaboration with key constituencies (including adult learners and teachers) so they are grounded in the needs of these constituencies. The content standards and performance indicators development process must demonstrate that key constituencies have participated and contributed to the standards development and that the grantee's advisory group has approved the standards developed as a basis for national validation.

The standards development process must incorporate significant collaboration with the key constituencies to assure that the standards are customer-driven (e.g., through group processes for standards refinement with key constituencies and other methods for constituency involvement and feedback throughout the developmental process). Group processes for standards refinement must include mechanisms for assuring on-going piloting of content standards in adult education and training classrooms in multiple locations across the country. Content standards with the performance indicators will be identified by March 31, 1997.

4. Actively engage key constituencies in the standards development process in order to build ownership and support of the standards and to assure they are truly ''customer-driven.'' Key constituencies/end users who are critical to assuring widespread use of the standards must be identified in the grant application. The key constituencies/end users identified should include but not be limited to teachers, learners, employers, parents, civic organizations, and other standards-setting initiatives related to the role being addressed by the grantee.

For the role of worker, these constituencies should include such groups as: employers and employer associations, unions, the National Skill Standards Board, State Human Resource Investment Councils, State skill standards initiatives, local private industry councils and job training administrative organizations, apprenticeship or other training sponsored by organized labor, school-to-work, workplace literacy, and providers of other related programs.

For the role of parents, these constituencies should include such

groups as the National Coalition for Parental Involvement in Education, the National Head Start Association, the National Coalition for Family Resources, the National Association of Child Care Resource and Referral Agencies, Even Start State Coordinators, The Center for Law and Education, the National Education Association, the American Federation of Teachers, Parent-Teacher Associations, and Even Start, Head Start and other family literacy providers.

For the role of citizens, these constituencies should include such groups as the Center for Civic Education, developers of the National Standards for Civics and Government (K–12 education), Kettering Foundation/National Issues Forum, American Bar Association, League of Women Voters, National League of Cities, VERA, The Center for Civic Literacy, the National Urban League, and other grassroots, state and national organizations and associations that focus on civil rights, neighborhood action, etc.

5. By July 31, 1997, nationally validate the content standards and the related performance indicators. Validation strategies may include national surveys, constituency group review and analysis of the standards or similar validation strategies. The elements and criteria for the validation process will be developed jointly with NIFL, its Federal partners, the National Policy Group and the other grantees.

6. In cooperation with NIFL, its Federal partners, the National Policy Group and the other grantees, develop draft criteria for assessment of the standards and identify the key elements of assessment guidelines that address the use of the performance indicators in classrooms and programs, and the process and tools for assessing their achievement. This activity is to be completed by August 31, 1997.

7. By September 30, 1997, develop a plan for nationwide implementation of the standards in adult education and job training delivery systems, in cooperation with NIFL, its Federal partners, the National Policy Group and the other grantees. These plans should reflect the use of the EFF standards in building linkages with other key components of the nation's workforce development system.

8. Cooperate with a third-party evaluation of the standards development and constituency-building process, lessons learned and outcomes, providing project reports and other project documentation to the evaluation team, participating in interviews, and assisting in collecting evaluation data, and in other ways cooperating with the project evaluation.

9. Identify technical assistance needed to assure the success of the EFF initiative. Technical assistance requirements are expected to include the unique needs of the applicant as well as needs that are common to all grantees. The NIFL will engage technical assistance services to support the work of the EFF projects under this grant.

10. Participate in three, two-day project meetings in November 1996, March 1997, and July 1997 in Washington, DC.

11. Participate in monthly project conference calls of two hours duration.

12. Maintain regular e-mail and other contact with other grantees throughout the grant period, in order to maximize sharing of information and assure the development of standards within a common framework.

Project Narrative

The applicant's project narrative must be organized and contain the information as described in the following sections.

(1) Approach to Standards Development for System Reform details the applicant's vision of standards and criteria for effective standards, its philosophy of standards development and consensus-building, and an overview of the key features of its approach for supporting the purposes of the EFF initiative and achieving the project objectives described above. In particular, the applicant should describe its approach to effectively building on the work accomplished in Phases 1 and 2 of the Equipped for the Future Initiative and related work appropriate to each role. This work is particularly substantial for the role of worker, including the U.S. Department of Labor's work on SCANS, the National Job Analysis Study which builds on SCANS to identify the work activities that are critical in the most competitive business environments, the O*NET to replace the DOT with a relational database that contains comprehensive information about worker requirements and characteristics, experience requirements and occupational requirements and characteristics useful to students, educators, employers and workers (see further information in EFF Orientation Packet).

The applicant should demonstrate its technical approach to standards development, including the specific standards development issues to be addressed in moving to a common standards framework that embraces all three adult roles, by providing a brief evaluation of the strengths and weaknesses of the draft standards provided in the EFF Orientation Packet.

(2) Plan of Operation includes the project goal and objectives, work plan and timeline and project management plan. The applicant's plan of operation should include:

(a) What techniques the applicant will use for refining the standards framework and the content standards, identifying performance indicators, and validating the standards and performance indicators on a national basis;

(b) How the applicant will involve key constituencies in project decisionmaking and standards development, implementation, marketing/dissemination, and validation tasks;

(c) How the applicant will work with the two other grantees to assure that the standards share a common format, structure, and language and that this initiative results in a unified standards framework and consistency in the standards across the three grantees; and

(d) How the applicant will document and monitor project processes and results.

(3) Organizational Capability demonstrates the ability and experience of the applicant and the members of its consortium to perform the tasks required in this project and its skills, technical expertise and knowledge in standards development, adult literacy instruction, and consensus-building among diverse constituencies at the national, state, and local levels.

(4) Qualifications of Key Personnel describes the qualifications of each staff person for the project position to which they have been assigned, identifies his/her employing organization, and provides an overview of his/her experience, knowledge, and capability to perform the work described as demonstrated by the conduct of similar work in related settings.

(5) Demonstrated Commitment of Partners and Key Constituencies provides evidence (e.g., letter of commitment) that show that (a) project advisory board members and other partners in the consortia understand their roles and are prepared to fulfill them at the level described in the proposal; and (b) key constituencies significant to the relevant role are supportive of the applicant's grant application.

Selection Criteria: In evaluating applications for a grant under this competition, the Director uses the following selection criteria:

(1) Approach to Standards Development (30 points): the Director reviews each application to determine the extent to which the applicant's

approach to standards development and consensus-building is appropriate to achieving the goals of Equipped for the Future, including:

(a) the extent to which the applicant's proposed approach to standards development:

(i) demonstrates knowledge and understanding of the Equipped for the Future Initiative and the EFF standards framework;

(ii) demonstrates knowledge of and understanding of key documents and initiatives related to the role it proposes to develop standards for;

(iii) builds on the first two project phases and these other initiatives rather than ''reinventing'' that work;

(iv) demonstrates a philosophy of collaborative standards development that is consistent with the EFF approach and philosophy;

(b) the extent to which the applicant's proposed approach leverages standards development tasks to build consensus among key constituencies and effect system reform;

(c) the quality of the technical approach demonstrated in the applicant's evaluation of the draft standards in the EFF Orientation Packet, including the identification of specific issues and challenges to be addressed in moving to a common standards framework that embraces all three adult roles.

(2) Plan of Operation (30 points): The Director reviews each application to determine the quality of the plan for developing standards and building consensus among key constituencies, including:

(a) the extent to which the applicant states clear and measurable goals and objectives for the project;

(b) the extent to which the applicant provides a fully detailed plan and timeline for achieving these goals which:

(i) includes specific strategies and techniques for refining the standards framework and the content standards, identifying performance indicators, and validating the standards and performance indicators on a national basis;

(ii) identifies specific mechanisms for involving adult learners and practitioners as well as other key constituencies in these activities; and

(iii) addresses the 12 key project activities and dates described in the Description of Program above;

(c) the quality of the applicant's plan for working with the two other grantees to assure that the standards share a common format, structure, and language, including strategies recommended to assure this initiative results in a unified standards framework and consistency in the standards across the three grantees;

(d) the quality of the applicant's plan to involve key constituencies in project decisionmaking and standards development, implementation, marketing/dissemination, and validation tasks;

(e) the soundness of the plan for documenting and monitoring the project processes and results.

(3) Organizational Capability and Qualifications of Key Personnel (25 points): The Director reviews each application to determine the capability of the applicant to achieve the goals of the project including:

(a) the extent to which the applicant provides a full description of each of the organizations that make up the consortium, including how that organization contributes to the consortium's experience and capability to:

(i) lead a broad-based collaborative national process for adult learning systems reform and improvement that is standards-driven;

(ii) develop technically defensible customer-driven content standards of what adults need to know and be able to do, related performance indicators and validate them on a national basis; and

(iii) leverage the commitment and involvement of key constituencies at the national, state, and local levels;

(b) the soundness of the staffing and organization plan for the consortium, including

(i) how roles and responsibilities will be assigned among the organizations within the consortium to assure clear lines of decisionmaking and effective use of each organization's strengths;

(ii) a statement of clear performance objectives for key staff;

(iii) the scope and nature of their responsibilities;

(iv) the level of effort they will devote to this project; and

(v) the inclusion of a project organization chart;

(c) the extent of which staff assigned to key positions include appropriate qualifications, in terms of knowledge, experience and proven capability to perform the work described;

(d) the inclusion among the staff of individuals with specific expertise, including

(i) individuals with demonstrated experience in related standards development efforts;

(ii) individuals with direct experience in adult literacy instruction and/or curriculum development; and

(iii) individuals with a broad understanding of the workforce development system and the ability to leverage the involvement of influential representatives from other program areas that constitute this system.

(4) Commitment of Partners and Key Constituencies (15 points): The Director reviews each application to determine the quality of the plan for engaging partners and key constituencies, including:

(a) the extent to which the applicant has

(i) assembled a national advisory group that represents key constituencies for their role; and

(ii) secured written documentation or each member's ability to represent that constituency on the advisory group;

(b) the extent to which the applicant has identified other appropriate constituencies to participate in the project;

(c) the quality of the applicant's plan for assuring that each constituency has the opportunity for appropriate and meaningful involvement in project activities;

(d) the explicit and documented commitment of each constituency to participate in the project.

(5) Budget and Cost Effectiveness (5 points): The Director reviews each application to determine the extent to which:

(a) The budget is adequate to support grant activities;

(b) The costs are reasonable in relation to the objectives of the project;

(c) The budget for any subcontractors are detailed and appropriate; and

(d) The budget details any resources, cash or in-kind, that the applicant will provide or seek in order to supplement grant funds.

Other Application Requirements

The application shall include the following:

Project Summary: The proposal must contain a brief summary of the proposed project suitable for publication. It should not be an abstract of the application, but rather a self-contained description of the project's goals, approach and the activities proposed. The summary must include the following information:

a. Name of applicant organization

b. Description of the consortium proposing the project and the key constituencies represented.

c. Adult role to be addressed in the plan: parent/family member, citizen or worker.

Project Description

This description should not exceed twenty (20) single-spaced pages, or forty (40) double-spaced pages. The

description may be amplified by material in attachments and appendices, but the body should stand alone to give a complete picture of the project. Applications which exceed 20 single-spaced pages or 40 double-spaced pages will not be reviewed.

Summary Proposal Budget

The proposal must contain a budget for support requested. The budget format may be reproduced as needed. Facsimiles may be used, but do not make substitutions in prescribed budget categories. Additional pages for budget explanation and amplification should be attached and must be consistent with the data and categories on the form. All budget requests must be documented and justified.

The Institute is reviewing the possibility of restricting indirect costs to 8% for this grant.

Budget Proposal

The budget proposal should be A SEPARATE DOCUMENT. Personnel items should include the names (or position titles) of key staff, number of hours, and applicable hourly rates. Discussion of equipment, supplies, and travel should include both the cost and the purpose and justification. Budgets should include all applicant's costs and should identify contributed costs, and support from other sources, if any. Sources of support should be clearly identified in all instances. The financial aspects of any cost sharing and joint or cooperative funding by members of a consortium formed for purposes of the applications should be shown in a detailed budget for each party. These budgets should reflect the arrangements among the parties, and should show exactly what cost-sharing is proposed for each budget item.

Disclosure of Prior Institute Support

If any subcontractor, partner, consortium member, or organization has received Institute funding in the past two years, the following information on the prior awards is required:

- Institute award number, amount and period of support;
- A summary of the results of the completed work; and
- A brief description of available materials and other related research products not described elsewhere.

If the applicant has received a prior award, the reviewers will be asked to comment on the quality of the prior work described in this section of the application.

Current and Pending Support

All current project support from whatever source (such as Federal, State, or local government agencies, private foundations, commercial organizations) must be listed. The list must include the proposed project and all other projects requiring a portion of time of the Project Director and other project personnel, even if they receive no salary support from the project(s). The number of person-months or percentage of effort to be devoted to the projects must be stated, regardless of source of support. Similar information must be provided for all proposals that are being considered by or will be submitted soon to other sponsors.

If the project now being submitted has been funded previously by another source, the information requested in the paragraph above should be furnished for the immediately preceding funding period. If the proposal is being submitted to other possible sponsors, all of them must be listed. Concurrent submission of a proposal to other organizations will not prejudice its review by the Institute.

Any fee proposed to be paid to a collaborating or ''partner'' for-profit entity should be indicated. (Fees will be negotiated by the Grants Officer.) Any copyright, patent or royalty agreements (proposed or in effect) must be described in detail, so that the rights and responsibilities of each party are made clear. If any part of the project is to be subcontracted, a budget and work plan prepared and duly signed by the subcontractor must be submitted as part of the overall application and addressed in the narrative.

Instructions for Transmittal of Applications

(1) To apply for a grant (a) The original and ten (10) copies of the application must be received by 4:30 PM, Eastern Daylight Time on September 6, 1996 at the offices of the National Institute for Literacy, 800 Connecticut Avenue, N.W., Suite 200, Washington, D.C. 20006, Attention: X257M.

(2) The National Institute for Literacy will mail a Grant Applicant Receipt Acknowledgment to each applicant. If an applicant fails to receive the notification of application receipt within 15 days from the date of mailing the application, the applicant should call the National Institute of Literacy at (202) 632–1500.

(3) The applicant must indicate on the envelope and in Item 10 of the application for Federal Assistance (Standard Form 424) the X257M number of the competition under which the application is being submitted.

Application Forms

The appendix to this announcement is divided into three parts plus a statement regarding estimated public reporting burden and various assurances and certifications. These parts and additional materials are organized in the same manner that the submitted application should be organized. The parts and additional materials are as follows:

Part I: Application for Federal Assistance (Standard Form 424, Rev. 4–88) and instructions.

Part II: Budget Information—Non-Construction Programs (Standard Form 424A) and instructions.

Part III: Application Narrative.

Additional Materials:

Estimated Public Reporting Burden.

Assurances—Non-Construction Programs (Standard Form 424B).

Certification Regarding Lobbying; Debasement, Suspension, and other Responsibility Matters; and Drug-Free Workplace Requirements (ED 90–0013).

Certification Regarding Debarment, Suspension, Ineligibility and Voluntary Exclusion:

Lower Tier Covered Transactions (ED 80–0014, 9/90) and instructions.

Disclosure of Lobbying Activities (Standard Form LLL) (if applicable) and instructions;

Note: ED 80–0014 is intended for the use of recipients and should not be transmitted to the National Institute for Literacy.

An applicant may submit information on a photostat copy of the application and budget forms, the assurances and the certifications. However, the application form, the assurances, and certifications must each have original certifications and must each have an original signature. No award can be made unless a completed application has been received.

Grant Administration

The administration of the grant is governed by the conditions of the award letter. The Education Department General Administrative Regulations, (EDGAR) 34 CFR Parts 4, 75, 77, 79, 80, 81, 82, 85 and 86 (July 1, 1993), set forth administrative and other requirements. This document is available through your public library and the National Institute for Literacy. It is recommended that appropriate administrative officials become familiar with the policies and procedures in the EDGAR which are applicable to this award. If a proposal is recommended for an award, the Grants Officer will request certain

organizational, management, and financial information.

The following information on grant administration dealing with questions such as General Requirements, Prior Approval Requirements, Transfer of Project Director, and Suspension or termination of Award should be referred to the Grants Officer.

Reporting

In addition to working closely with the Institute, the applicant will be required to submit a quarterly report of activities, and other products as described in the DESCRIPTION OF PROGRAMS above and in the cooperative agreement between the applicant and the NIFL.

Acknowledgment of Support and Disclaimer

An acknowledgement of Institute support and a disclaimer must appear in publications of any material, whether copyrighted or not, based on or developed under NIFL-supported projects.

''This material is based upon work supported by the National Institute for Literacy under Grant No. (Grantee should enter NIFL grant number)''.

Except for articles of papers published in professional journals, the following disclaimer should be included:

''Any opinion, findings, and conclusions or recommendations expressed in this material are those of the authors) and do not necessarily reflect the views of the National Institute for Literacy.''

Instructions for Estimated Public Reporting Burden

Under terms of the Paperwork Reduction Act of 1980, as amended, and the regulations implementing the Act, the National Institute for Literacy invites comment on the public reporting burden in this collection of information. Public reporting burden for this collection of information is estimated to average 80 hours per response, including the time for reviewing instructions, searching existing data sources, gathering and disseminating the data needed, and completing and reviewing the collection of information. You may send comments regarding this burden estimate or any other aspect of this collection of information, including suggestions for reducing this burden to the National Institute for Literacy, and the Office Management and Budget, Paperwork Reduction Project, Washington, DC 20503.

Carolyn Staley,

Deputy Director, National Institute for Literacy.

[FR Doc. 96–16494 Filed 6–26–96; 8:45 am]

BILLING CODE 6055–01–M

NATIONAL FOUNDATION ON THE ARTS AND HUMANITIES

Cooperative Agreement for a Publication on Arts and Substance Abuse Prevention

AGENCY: National Endowment for the Arts.

ACTION: Notification of availability.

SUMMARY: The National Endowment for the Arts requests proposals leading to the award of a Cooperative Agreement for the development, production, and printing of a publication that will highlight exemplary projects involving artists and arts organizations in substance abuse prevention programs. The publication is anticipated to be approximately 100 pages. a printing of $100,000 copies is desired. Those interested in receiving the Solicitation should reference Program Solicitation PS 96–08 in their written request and include two (2) self-addressed labels. Verbal requests for the Solicitation will not be honored.

DATES: Program Solicitation PS 96–08 is scheduled for release approximately July 16, 1996 with proposals due on August 19, 1996.

ADDRESSES: Requests for the Solicitation should be addressed to National Endowment for the Arts, Grants & Contracts Office, Room 618, 1100 Pennsylvania Ave., N.W., Washington, D.C. 20506.

FOR FURTHER INFORMATION CONTACT: William I. Hummel, Grants and Contracts Office, National Endowment for the Arts, 1100 Pennsylvania Ave., N.W., Washington, D.C. 20506 (202/682–5482).

William I. Hummel,

Coordinator, Cooperative Agreements and Contracts.

[FR Doc. 96–16446 Filed 6–26–96; 8:45 am]

BILLING CODE 7537–01–M

NATIONAL SCIENCE FOUNDATION

Committee Management; Renewals, Reestablishment, Amendment, and Terminations

Effective June 30, 1996, the following actions will occur in NSF's advisory committee structure:

Renewals: The Assistant Directors having responsibility for the Advisory Committees listed below have determined that renewal of these groups is necessary and in the public interest in connection with the performance of duties imposed upon the Director, National Science Foundation (NSF), by 42 USC 1861 et seq. This determination follows consultation with the Committee Management Secretariat, General Services Administration. Authority for these Advisory Committees will expire on June 30, 1998, unless they are renewed.

Code and Advisory Committee Name

57 Special Emphasis Panel in Graduate Education
59 Special Emphasis Panel in Elementary, Secondary & Informal Education
66 Advisory Committee for Mathematical and Physical Sciences
173 Special Emphasis Panel in Engineering Education and Centers
1115 Advisory Committee for Computer and Information Science and Engineering
1171 Advisory Committee for Social, Behavioral and Economic Sciences
1173 Committee on Equal Opportunities in Science & Engineering
1185 Special Emphasis Panel in Advanced Scientific Computing
1186 Special Emphasis Panel in Astronomical Sciences
1189 Special Emphasis Panel in Biological and Environmental Systems
1190 Special Emphasis Panel in Chemical and Thermal Systems
1191 Special Emphasis Panel in Chemistry
1192 Special Emphasis Panel in Computer and Computation Research
1193 Special Emphasis Panel in Cross-Disciplinary Activities
1194 Special Emphasis Panel in Design, Manufacture & Industrial Innovation
1196 Special Emphasis Panel in Electrical and Communications Systems
1199 Special Emphasis Panel in Human Resource Development
1200 Special Emphasis Panel in Information, Robotics and Intelligent Systems
1203 Special Emphasis Panel in Materials Research
1204 Special Emphasis Panel in Mathematical Sciences
1205 Special Emphasis Panel in Civil & Mechanical Systems
1206 Special Emphasis Panel in Microelectronic Information Processing Systems

1207 Special Emphasis Panel in Networking & Communications Research & Infrastructure
1208 Special Emphasis Panel in Physics
1209 Special Emphasis Panel in Polar Programs
1210 Special Emphasis Panel in Research, Evaluation, and Communication
1214 Special Emphasis Panel in Undergraduate Education
1765 Special Emphasis Panel in Educational System Reform

Restablishment: The Special Emphasis Panel in Experimental Programs to Stimulate Competitive Research (ESPSCoR) is being re-established to review and evaluate proposals submitted to the EPSCoR Program.

Amendment—Name change:

From: #1766 Special Emphasis Panel in Social, Behavioral and Economic Research

To: #1766 Special Emphasis in Social, Behavioral and Economic Sciences

Terminations

30 Council for Continental Scientific Drilling
139 Advisory Panel for Presidential Faculty Fellows
1201 Special Emphasis Panel in International Programs (subsumed under code 1766)
1211 Special Emphasis Panel in Science Resources Studies (subsumed under code 1766)

Dated June 20, 1996.

M. Rebecca Winkler,

Committee Management Officer.

[FR Doc. 96–16469 Filed 6–26–96; 8:45 am]

BILLING CODE 7555–01–M

Notice of Conference on Shaping the Future: Strategies for Revitalizing Undergraduate Education

The National Science Foundation (NSF) will hold a three day Conference on Shaping the Future: Strategies for Revitalizing Undergraduate Education. The conference will take place at the Sheraton Washington Hotel, 2660 Woodley Road at Connecticut Avenue, NW., Washington, DC 20008. Sessions will be held from 5:30–10 p.m. on July 11, 1996 and from 7:30 a.m.–10:30 p.m. July 12, 1996 and 7:30 a.m.–3:00 p.m. on July 13, 1996.

The goal of the conference is to provide a forum for gathering the views and input of various constituencies and stakeholders in the undergraduate education community. Of particular interest will be the discussion of strategies for comprehensive reform of undergraduate education, and the enhanced application of science, mathematics, engineering, and technology curricula to the benefit of all students, regardless of their chosen major or career path.

The conference will not operate as an advisory committee. It will be open to the public with advance registration. Participants will include approximately 500 leaders in engineering, mathematics and science education.

For additional information, contact the Division of Undergraduate Education (703) 306–1666; e-mail: undergrad@nsf.gov.

Dated: June 20, 1996.

Robert F. Watson,

Division Director, Undergraduate Education.

M. Rebecca Winkler,

Committee Management Officer.

[FR Doc. 96–16470 Filed 6–26–96; 8:45 am]

BILLING CODE 7555–01–M

Special Emphasis Panel in Elementary, Secondary and Informal Education; Notice of Meeting

In accordance with the Federal Advisory Committee Act (Pub. L. 92–463, as amended), the National Science Foundation announces the following meeting.

Name and Committee Code: Special Emphasis Panel in Elementary, Secondary and Informal Education (#59).

Date and Time: Wednesday, July 17, 1996; 6:00 p.m. to 9:00 p.m.,; Thursday, July 18, 1996; 8:00 a.m. to 6:00 p.m.; Friday, July 19, 1996; 8:00 a.m. to 3:00 p.m.

Place: Room 375, National Science Foundation, 4201 Wilson Boulevard, Arlington, VA 22230.

Type of Meeting: Closed.

Contact Person: Dr. Hyman H. Field, Program Director, Division of Elementary, Secondary and Informal Education, National Science Foundation, 4201 Wilson Blvd., Arlington, VA 22230. Telephone: (703) 306–1616.

Purpose of Meeting: To provide advice and recommendations concerning proposals for the Informal Science Program submitted to NSF for financial support.

Agenda: To review and evaluate proposals as part of the selection process for awards.

Reason for Closing: The proposals being reviewed include information of a proprietary or confidential nature, including technical information; financial data, such as salaries; and personal information concerning individuals associated with the proposals. These matters are exempt under 5 U.S.C. 552b(c)(4) and (6) of the Government in the Sunshine Act.

Dated: June 24, 1996.

M. Rebecca Winkler,

Committee Management Officer.

[FR Doc. 96–16467 Filed 6–26–96; 8:45 am]

BILLING CODE 7555–01–M

Advisory Committee for the NSF Science and Technology Centers (STC) Program; Notice of Meeting

In accordance with the Federal Advisory Committee Act (Pub. L. 92–463, as amended), the National Science Foundation announces the following meetings:

Name: Advisory Committee for the NSF Science and Technology Centers (STC) Program.

Date and Time: July 15, 1996.

Place: Room 1235; National Science Foundation, 4201 Wilson Blvd., Arlington, VA 22230.

Type of Meeting: Open.

Contact Person: Dr. Nathaniel G. Pitts, Director, Office of Science and Technology Infrastructure, Rm. 1270, 4201 Wilson Blvd., Arlington, VA 22230, Telephone: (703) 306–1040.

Purpose of Meeting: To advise the NSF on the future of its Science and Technology Centers Program.

Agenda: To review the history and evaluation of Science and Technology Centers (STC) Program and develop a recommendation on the future of the STC Program.

Dated: June 24, 1996.

M. Rebecca Winkler,

Committee Management Officer.

[FR Doc. 96–16468 Filed 6–26–96; 8:45 am]

BILLING CODE 7555–01–M

Special Emphasis Panel in Social Behavioral and Economic Research; Notice of Meeting

In accordance with the Federal Advisory Committee Act (Pub. L. 92–463, as amended), the National Science Foundation announces the following meeting:

Name and Committee Code: Special Emphasis Panel in Social Behavioral and Economic Research (#1766).

Date and Time: July 9-10, 1996 from 9:00 am-6:00 pm.

Place: Room 1120, National Science Foundation, 4201 Wilson Boulevard, Arlington, VA 22230 and The Renaissance Hotel, 950 Stafford Street, Arlington, VA 22203.

Type of Meeting: Closed.

Contact Person: Dr. Robin Cantor, National Science Foundation, 4201 Wilson Boulevard, Arlington, VA 22230. Telephone: (703) 306–1757.

Purpose of Meeting: To provide advice and recommendations concerning proposals submitted to NSF for financial support.

Agenda: To review and evaluate NSF/EPA Partnership for Environmental Research

proposals as part of the selection process for awards.

Reason for Closing: The proposals being reviewed include information of a proprietary or confidential nature, including technical information; financial data, such as salaries and personal information concerning individuals associated with the proposals. These matters are exempt under 5 U.S.C. 552b(c) (4) and (6) of the Government in the Sunshine Act.

Reason for Late Notice: Difficulty in arranging for a suitable meeting time for the full committee.

Dated: June 24, 1996.

M. Rebecca Winkler,

Committee Management Officer.

[FR Doc. 96–16466 Filed 6–26–96; 8:45 am]

BILLING CODE 7555–01–M

OFFICE OF PERSONNEL MANAGEMENT

[SF 2817]

Proposed Collection; Comment Request Review of a New Information Collection

AGENCY: Office of Personnel Management.

ACTION: Notice.

SUMMARY: In accordance with the Paperwork Reduction Act of 1995 (Public Law 104–13, May 22, 1995), this notice announces that the Office of Personnel Management will be submitting to the Office of Management and Budget a request for clearance of a new information collection. SF 2817, Federal Employees' Group Life Insurance Election, is used to enroll or change elections under the Federal Employees' Group Life Insurance Program. This form is proposed for clearance because Federal employees and retirees can now assign (give up ownership) of their insurance coverage. Assignees may now use the SF 2817 to make election changes to decrease the employee's or retiree's coverage. Since assignees are members of the public, OMB clearance is now required for this form. We are clearing this form for assignees only.

We estimate 100 forms are completed annually by assignees. Each form takes approximately 15 minutes to complete. The annual estimated burden is 25 hours.

For copies of this proposal, contact Jim Farron on (202) 418–3208, or E-mail to jmfarron@mail.opm.gov

DATES: Comments on this proposal should be received on or before August 26, 1996.

ADDRESS: Send or deliver comments to—Kenneth H. Glass, Chief, Insurance Operations Division, Retirement and Insurance Service, U.S. Office of Personnel Management, 1900 E Street, NW, Room 3415, Washington, DC 20415–0001.

FOR INFORMATION REGARDING ADMINISTRATIVE COORDINATION—CONTACT: Mary Beth Smith-Toomey, Management Services Division, (202) 606–0623.

U.S. Office of Personnel Management.

Lorraine A. Green,

Deputy Director.

[FR Doc. 96–16276 Filed 6–26–96; 8:45 am]

BILLING CODE 6325–01–M

[RI 95–4]

Submission for OMB Review; Comment Request for Reclearance of Information Collection

AGENCY: Office of Personnel Management.

ACTION: Notice.

SUMMARY: In accordance with the Paperwork Reduction Act of 1995 (Public Law 104–13, May 22, 1995), this notice announces that the Office of Personnel Management intends to submit to the Office of Management and Budget a request for reclearance of an information collection. RI 95–4, Marital Information Required of Refund Applicants, is used by OPM to pay refunds of retirement contributions. OPM must know about the applicant's marital status and whether any spouse and any former spouses have been informed of the proposed refund. All applicants for refund must respond.

Approximately 5,000 RI 95–4 forms are completed annually. Each form takes approximately 30 minutes to complete. The annual estimated burden is 2,500 hours.

For copies of this proposal, contact Jim Farron on (202) 418–3208, or E-mail to jmfarron@mail.opm.gov

DATES: Comments on this proposal should be received on or before July 29, 1996.

ADDRESSES: Send or deliver comments to—

Barbara Yearwood, Acting Chief, FERS Division, Retirement and Insurance Service, U.S. Office of Personnel Management, 1900 E Streeet, NW., Room 4429, Washington, DC 20415–0001

and

Joseph Lackey, OPM Desk Officer, Office of Information and Regulatory Affairs, Office of Management and Budget, New Executive Office Building, NW., Room 3002, Washington, DC 20503.

FOR INFORMATION REGARDING ADMINISTRATIVE COORDINATION—CONTACT: Mary Beth Smith-Toomey, Management Services Division, (202) 606–0623.

U.S. Office of Personnel Management.

Lorraine A. Green,

Deputy Director.

[FR Doc. 96–16277 Filed 6–26–96; 8:45 am]

BILLING CODE 6325–01–M

Federal Prevailing Rate Advisory Committee Cancellation of Open Committee Meeting

According to the provisions of section 10 of the Federal Advisory Committee Act (Pub. L. 92–463), notice is hereby given that the meeting of the Federal Prevailing Rate Advisory Committee scheduled for Thursday, June 27, 1996, has been canceled.

Information on other meetings can be obtained by contacting the Committee's Secretary, Office of Personnel Management, Federal Prevailing Rate Advisory Committee, Room 5559, 1900 E Street, NW., Washington, DC 20415, (202) 606–1500.

Dated: June 17, 1996.

Phyllis G. Foley,

Chair, Federal Prevailing Rate Advisory Committee.

[FR Doc. 96–16344 Filed 6–26–96; 8:45 am]

BILLING CODE 6325–01–M

RAILROAD RETIREMENT BOARD

Agency Forms Submitted for OMB Review

SUMMARY: In accordance with the Paperwork Reduction Act of 1995 (44 U.S.C. Chapter 35), the Railroad Retirement Board has submitted the following proposal(s) for the collection of information to the Office of Management and Budget for review and approval.

SUMMARY OF PROPOSAL(S):

(1) *Collection title:* Request for Medicare Payment.

(2) *Form(s) submitted:* G–740S, HCFA–1500.

(3) *OMB Number:* 3220–0131.

(4) *Expiration date of current OMB clearance:* July 31, 1996.

(5) *Type of request:* Extension of a currently approved collection.

(6) *Respondents:* Individuals or households, Business or other for-profit.

(7) *Estimated annual number of respondents:* See Justification (Item No. 12).

(8) *Total annual responses:* 1.

(9) *Total annual reporting hours:* 1.

(10) *Collection description:* The Railroad Retirement Board (RRB) administers the Medicare program for persons covered by the railroad retirement system. The collection obtains the information needed by the MetraHealth Insurance Company, the RRB's carrier, to pay claims for services covered under Part B of the program.

ADDITIONAL INFORMATION OR COMMENTS: Copies of the form and supporting documents can be obtained from Chuck Mierzwa, the agency clearance officer (312–751–3363). Comments regarding the information collection should be addressed to Ronald J. Hodapp, Railroad Retirement Board, 844 North Rush Street, Chicago Illinois 60611–2092 and the OMB reviewer, Laura Oliven (202–395–7316), Office of Management and Budget, Room 10230, New Executive Office Building, Washington, DC 20503.

Chuck Mierzwa,

Clearance Officer.

[FR Doc. 96–16447 Filed 6–26–96; 8:45 am]

BILLING CODE 7905–01–M

SECURITIES AND EXCHANGE COMMISSION

[Release No. 35–26535]

Filings Under the Public Utility Holding Company Act of 1935, As Amended (''Act'')

June 21, 1996.

Notice is hereby given that the following filing(s) has/have been made with the Commission pursuant to provisions of the Act and rules promulgated thereunder. All interested persons are referred to the application(s) and/or declaration(s) for complete statements of the proposed transaction(s) summarized below. The application(s) and/or declaration(s) and any amendments thereto is/are available for public inspection through the Commission's Office of Public Reference.

Interested persons wishing to comment or request a hearing on the application(s) and/or declaration(s) should submit their views in writing by July 15, 1996, to the Secretary, Securities and Exchange Commission, Washington, D.C. 20549, and serve a copy on the relevant applicant(s) and/or declarant(s) at the address(es) specified below. Proof of service (by affidavit or, in case of an attorney at law, by certificate) should be filed with the request. Any request for hearing shall identify specifically the issues of fact or law that are disputed. A person who so requests will be notified of any hearing, if ordered, and will receive a copy of any notice of order issued in the matter. After said date, the application(s) and/or declaration(s), as filed or as amended, may be granted and/or permitted to become effective.

Alabama Power Company, et al. (70–8461)

Alabama Power Company, 600 North 18th Street, Birmingham, Alabama 35291 (''Alabama''), Georgia Power Company, 333 Piedmont Avenue, N.E., Atlanta, Georgia 30308 (''Georgia''), Gulf Power Company, 500 Bayfront Parkway, Pensacola, Florida 32501 (''Gulf''), Mississippi Power Company, 2992 West Beach, Gulfport, Mississippi 39501 (''Mississippi'') and Savannah Electric and Power Company, 600 East Bay Street, Savannah, Georgia 31401 (''Savannah'') (together, ''Operating Companies''), electric public utility subsidiaries of The Southern Company, a registered holding company, have filed a post-effective amendment to their application-declaration under sections 6(a), 7, 9(a), 10 and 12(b) of the Act and rules 45 and 54 thereunder.

By order dated December 15, 1994 (HCAR No. 26187) (''December Order'') each Operating Company was authorized to organize a separate special purpose subsidiary as: (1) a statutory business trust; (2) a limited liability company under the Limited Liability Company Act; and (3) a limited partnership under the Revised Uniform Limited Partnership Act of any state in which they respectively are organized to do business or are incorporated, or of the State of Delaware or other jurisdiction considered advantageous by any of the Operating Companies (''Special Purpose Subsidiaries''). The Special Purpose Subsidiaries then could issue and sell their preferred securities (''Preferred Securities''), with a par or stated value or liquidation preference of up to $100 per security, at any time or from time-to-time, in one or more series through December 31, 1997. The Preferred Securities would be sold by the respective Special Purpose Subsidiaries in the following aggregate par or stated value or liquidation preference amounts: (1) up to $175 million in the case of Alabama; (2) up to $300 million in the case of Georgia; (3) up to $15 million in the case of Gulf; (4) up to $15 million in the case of Mississippi; and (5) up to $10 million in the case of Savannah.

Further, the December Order authorized each Operating Company to acquire all of the common stock (''Common Securities'') or all of the general partnership interests, as the case may be, of its Special Purpose Subsidiary for an amount up to 21% of the total equity capitalization from time-to-time of such Special Purpose Subsidiary (''Equity Contribution''). Each Operating Company may issue and sell to its Special Purpose Subsidiary, at any time or from time-to-time in one or more series, subordinated debentures, promissory notes or other debt instruments (''Notes'') governed by an indenture or other document, and the Special Purpose Subsidiary will apply both the Equity Contribution and the proceeds from the sale of Preferred Securities to purchase Notes of such Operating Company. Alternatively, each Operating Company may enter into a loan agreement or agreements with its Special Purpose Subsidiary under which it will loan to the Operating Company (''Loans'') both the Equity Contribution and the proceeds from the sale of the Preferred Securities evidenced by Notes. Each Operating Company may also guarantee (''Guaranties'') the payment of dividends or distributions on the Preferred Securities, payments to the Preferred Securities holders of amounts due upon liquidation or redemption of the Preferred Securities and certain additional amounts that may be payable regarding the Preferred Securities.

Each Note will have a term, including extensions, of up to 50 years. Prior to maturity, each Operating Company will pay only interest on its Notes at a rate equal to the dividend or distribution rate on the related series of Preferred Securities. The dividend or distribution rate may be either fixed or adjustable, determined on a periodic basis by auction or remarketing procedures, in accordance with a formula or formulae based upon certain reference rates, or by other predetermined methods. Such interest payments will constitute each Special Purpose Subsidiary's only income and will be used by it to pay monthly dividends or distributions on the Preferred Securities issued by it and dividends or distributions on the common stock or the general partnership interests of such Special Purpose Subsidiary.

Dividend payments or distributions on the Preferred Securities will be made monthly, will be cumulative and must be made to the extent that funds are legally available. However, each Operating Company will have the right to defer payment of interest on its Notes for up to five years, provided that, if dividends or distributions on the Preferred Securities of any series are not paid for up to 18 consecutive months, then the holders of the Preferred Securities of such series may have the right to appoint a trustee, special general partner or other special

representative to enforce the Special Purpose Subsidiary's rights under the related Note and Guaranty. Each Special Purpose Subsidiary will have the parallel right to defer dividend payments or distributions on the related series of Preferred Securities for up to five years. The dividend or distribution rates, payment dates, redemption and other similar provisions of each series of Preferred Securities will be substantially identical to the interest rates, payment dates, redemption and other provisions of the related Note issued by the Operating Company.

The Notes and related Guaranties of each Operating Company will be subordinate to all other existing and future indebtedness for borrowed money of such Operating Company and will have no cross-default provisions with respect to other indebtedness of the Operating Company. However, each Operating Company may not declare and pay dividends on its outstanding preferred or common stock unless all payments due under its Notes and Guaranties have been made.

It is expected that each Operating Company's interest payments on the Notes issued by it will be deductible for federal income tax purposes and that its Special Purpose Subsidiary will be treated as a partnership for federal income tax purposes. Consequently, holders of the Preferred Securities will be deemed to have received partnership distributions in respect of their dividends or distributions from the respective Special Purpose Subsidiary and will not be entitled to any ''dividends received deduction'' under the Internal Revenue Code.

The Preferred Securities are optionally redeemable by the Special Purpose Subsidiary at a price equal to their par or stated value or liquidation preference, plus any accrued and unpaid dividends or distributions, at any time after a specified date not later than 10 years from their date of issuance or upon the occurrence of certain events. The Preferred Securities of any series may also be subject to mandatory redemption upon the occurrence of certain events. Each Operating Company also may have the right in certain cases to exchange the Preferred Securities of its Special Purpose Subsidiary for the Notes or other junior subordinated debt of the Operating Company.

In the event that any Special Purpose Subsidiary is required to withhold or deduct certain amounts in connection with dividend, distribution or other payments, it may also have the obligation to ''gross up'' such payments so that the holders of the Preferred Securities will receive the same payment after such withholding or deduction as they would have received if no such withholding or deduction were required. In such event, the related Operating Company's obligations under its Note and Guaranty may also cover such ''gross up'' obligation. In addition, if any Special Purpose Subsidiary is required to pay taxes on income derived from interest payments on the Notes, the related Operating Company may be required to pay additional interest equal to the tax payment. Each Operating Company, individually, expects to apply the net proceeds of the Loans to the repayment of outstanding short-term debt, for construction purposes, and for other general corporate purposes, including the redemption or other retirement of outstanding senior securities.

The December Order authorized Georgia to enter into certain transactions regarding the issuance and sale of $100 million of Preferred Securities, but the Commission reserved jurisdiction over all remaining transactions pending completion of the record. By subsequent supplemental order dated January 17, 1996 (HCAR No. 26452), Alabama was authorized to enter into certain transactions regarding the issuance and sale of $97 million of Preferred Securities, and the Commission again reserved jurisdiction over all remaining transactions pending completion of the record.

The Operating Companies now propose to increase the aggregate par or stated value or liquidation preference of preferred securities that may be issued by the Special Purpose Subsidiaries of Alabama, Georgia, Gulf, Mississippi and Savannah in respective aggregate amounts of up to $250 million, $500 million, $60 million, $60 million and $35 million. The Operating Companies propose also to extend the time in which the transactions may be effected through December 31, 2001.

HEC Inc., et al. (70–8831)

HEC Inc. (''HEC''), 24 Prime Parkway, Natick, Massachusetts 01760, a nonutility subsidiary of Northeast Utilities (''Northeast''), a registered holding company, and HEC's two nonutility subsidiary companies, HEC Energy Consulting Canada Inc. (''HEC Canada''), 285 Yorkland Boulevard, Willowdale, Ontario, M2J 1S5, and HEC International Corporation (''HEC International''), 24 Prime Parkway, Natick, Massachusetts 01760 (collectively, the ''Applicants''), have filed an application-declaration under sections 6(a), 7, 9, 10, 12 and 13(b) of the Act and rules 45, 54, 90 and 91 thereunder. The Applicants propose to provide additional energy related services to associate and nonassociate companies and to enter joint ventures with utilities located outside New York and New England.

By order dated July 27, 1990 (HCAR No. 25114–A) (''1990 Order''), the Commission authorized HEC to provide various energy management services and demand side management services (''DSM'') to customers in New England and New York (the ''Region'') and, to a lesser extent, outside the Region.

By order dated September 30, 1993 (HCAR No. 25900) (''1993 Order''), the Commission authorized HEC to expand its energy management and DSM services and to provide consulting services on energy related matters. In addition the 1993 Order authorized HEC to design and market intellectual property, and also provided that, when HEC sold or licensed intellectual property that had been developed by a Northeast system company, the associate company would receive 70% of the revenues until it recovered its development costs, after which the associate company would receive 20% of the such revenues.

By order dated August 19, 1994 (HCAR) No. 26108) (''1994 Order''), the Commission authorized HEC to organize and acquire HEC Canada and HEC International. HEC Canada provides energy management, DSM and consulting services to customers located in Canada. HEC International was organized to participate, on a 50/50 basis, in a joint venture to form HECI, a subsidiary of HEC International. HECI was formed to provide energy management, DSM and consulting services to customers located in the western United States and foreign countries (excluding Canada).

By order dated July 19, 1995 (HCAR No. 26335) (''1995 Order''), the Commission authorized HEC and its direct and indirect subsidiaries to provide EMS and DSM services to customers without regard to prior restrictions limiting revenues attributable to customers outside the Region.

The Applicants now wish to expand the energy management and demand side management services that they provide to nonassociates, including customers of Northeast's electric utility operating companies (''Operating Companies''), and associate companies in the Northeast system. Specifically, they propose to provide the following new energy related services: (1) identifying energy and other resource efficient applications of technologies (the application of which may improve and even increase end-use services,

such as lighting or ventilation, although overall costs may not be reduced); (2) designing facility and process modifications and/or enhancements to increase energy and resource efficiencies (which may not only improve but also increase end-use services of facilities or processes, such as lighting or ventilation); (3) designing, managing or directing construction of, and/or installing mechanical, water and electrical systems, energy and other resource consuming equipment, and equipment that controls or monitors energy consumption and related equipment; (4) implementing operational and maintenance techniques and measures related to energy and other resource consumption; (5) recommending acquisition of, and/or brokering cost effective energy, including electric, gas, oil, propane, wood chips and refuse-derived fuels (the Applicants state they will not recommend acquisitions of, or broker, electricity for the Operating Companies and their customers), or marketing of energy fuels (but not electricity); [1] (6) provide marketing expertise and related technical support to Northeast system companies and nonassociate companies that want to sell energy related products and services; (7) constructing, owning, maintaining, and/or operating energy consuming systems and related support equipment and structures, such as central heating and chilling plants, compressed air systems, energy management systems, pumps, motors, and lighting systems (but not systems for the generation of electric energy); (8) designing, constructing and/or maintaining cogeneration and self-generation systems, up to 10 megawatts in capacity, that will be owned and operated by associates and nonassociates; (9) conducting preliminary development work on cogeneration and self-generation projects up to 10 megawatts in capacity; (10) training related to energy services the Applicants are authorized to provide; (11) monitoring, tracking and reporting of system or program results; and (12) designing and/or marketing energy-related proprietary and/or intellectual property (such as processes, programs, techniques, or computer software), and energy management system monitoring programs and reports. In the event the Applicants sell or license intellectual property developed by an associate company, the associate company will be paid in accordance with the terms stated in the 1993 Order.

The Applicants also propose to expand their consulting and engineering services provided to associates and nonassociates to include energy efficiency and associated technologies, such as indoor air quality and environmental compliance. They state such services include consulting on development or evaluation of energy conservation and energy efficiency measurement protocols and standards, general technical advice concerning the use, benefits, planning and administration of energy management or energy services programs, and requisites for permits concerning installation of a new boiler or waste-heat recovery system.

Payment for all the Applicants' proposed services will vary by project and may include fee-for-service, fixed price, time and materials, progress payments, turnkey payment, third-party financing arrangements, performance contracts with a savings guarantee or payment based on the energy or other resource savings achieved, the output of equipment (for example, steam, water, chilled water, air, or heat), commissions, and other payment structures. The Applicants state that services provided to any associate Northeast system companies will be provided at cost. They also state that they will not use other Northeast system company employees in providing services to the Operating Companies.

The Applicants also seek authority to extend, through June 30, 2001, the authority to form and finance joint ventures with utilities to serve customers in areas outside the Region. Each joint venture will service customers within a specific region that would include, but not be limited to, the service area of the participating utility. The joint ventures will provide all of the services that the Applicants currently are authorized to provide, as well as the proposed services, if subsequently authorized. The joint ventures would enter into agreements with the Applicants and the participating utility to obtain administrative, marketing and engineering services, which would be provided by the Applicants at cost.

The Applicants propose to acquire equity interests, notes or other forms of indebtedness of joint ventures. Subsequently, the Applicants propose to make capital contributions, loans or advances of money, property or other contributions (including direct payments of expenses) to the joint ventures. The rate of interest on loans or advances from the Applicants will equal HEC's cost of money; advances from the respective utility will not exceed the utility's cost of money. The Applicants state that their investment in any one joint venture, including the value of all contributions, will not exceed $1 million, and that their aggregate investments in all such joint ventures will not exceed $8 million, absent further Commission authorization. The participating utility may invest up to $1 million in a joint venture.

Consolidated Natural Gas Company (70–8853)

Consolidated Natural Gas Company (''CNG''), CNG Tower, 625 Liberty Avenue, Pittsburgh, Pennsylvania 15222–3199, a registered holding company, has filed a declaration under sections 12(b) and 32 of the Act and rules 45, 53 and 54 thereunder.

CNG's wholly owned subsidiary, CNG Power Services Corporation (''Power Services''), is an exempt wholesale generator (''EWG'') under section 32 of the Act and is engaged in the purchase and sale of electricity at wholesale. CNG proposes to guarantee, through March 31, 2001, obligations incurred by Power Services under electric power purchase and sales contracts, for amounts not to exceed $250 million outstanding at any time.

Power Services plans to use risk-management tools to reduce the electric price volatility risk to CNG through the guarantees. Such tools would include electric futures contracts, options on electric futures contracts, and swap agreements. Additionally, CNG would make no new guarantees of Power Services' sales obligations if there are current defaults by Power Services on any of its delivery obligations. CNG will not make any guarantee to the extent that it would cause CNG's investment in EWGs and foreign utility companies (as defined in the Act) to exceed 50% of CNG's consolidated retained earnings.

Cinergy Corp. (70–8867)

Cinergy Corp. (''Cinergy''), a registered holding company, located at 139 East Fourth Street, Cincinnati, Ohio 45202, has filed an application-declaration under section 9(c)(3) of the Act or, in the alternative, sections 9(a) and 10 of the Act, and rule 54 thereunder.

Cinergy requests authorization to invest a total of $10 million from time to time through December 31, 2002 to

[1] In providing energy brokering services, the Applicants would function as intermediaries to bring energy buyers and sellers together. Marketing energy fuels would involve the contracting, by Applicants, to acquire energy fuels on behalf of their customers. Specifically, the Applicants state they would identify and analyze alternative options available to meet their customers' needs, select the most beneficial options and execute contracts to purchase energy fuels and resell such fuels to their customers. In providing such services, the Applicants state they will not acquire energy production, transportation or storage facilities.

acquire up to a 20% limited partnership interest in Nth Power Technologies Fund I, L.P. (''NPT Fund'' or ''Partnership''), a California limited partnership formed to invest in energy technology companies.[2] Cinergy intends to use funds borrowed under an existing credit facility (see Holding Company Act Release No. 26488, March 12, 1996) to make the proposed investment.

Cinergy states that the NPT Fund will invest in companies (''Portfolio Companies''), none of which will be affiliates of Cinergy, engaged in developing and commercializing electric and gas energy technologies in one or more of the following categories: (1) Electricity Generation and Storage (including fuel conversion technology, fuel cells, semiconductor generators and kinetic, thermal and electrochemical storage technologies); (2) Electric Power Quality (including a wide range of products ranging from substation-level storage and voltage improvement products to end-use load protection devices); (3) Energy-Related Communications, Control and Information Technologies (including (a) a broad range of energy-efficient end-use products which enable customer choice while optimizing the use of gas and electricity, such as integrated residential automation, energy security and energy management hardware and software, (b) products of internal interest to gas and electric utilities such as artificial intelligence-based monitoring and control systems, automated billing, and sophisticated productivity tools, such as advanced energy network planning and optimization software tools that will improve reliability and lower costs of operation, (c) sensors and control algorithms, and (d) electric and gas-related telecommunications and fiber optic services, such as remote meter reading, data gathering and utility customer services, and related specialized software); (4) Energy-Saving End-Use Products [3] (consisting of energy-saving versions of traditional products and processes as well as new products and processes intended to save energy, such as advanced lighting and lighting controls, mechanical drives, drying processes, industrial furnaces, materials processing technology, environmental controls, refrigeration, HVAC, advanced domestic appliances, and energy storage technologies and other component parts with respect to the development and commercialization of energy efficient electric, hybrid and natural gas vehicles); and (5) Transmission and Distribution (including technologies to minimize power losses or reduce operational costs, power switching technologies, distribution automation, superconductivity, specialized metering technology and noise and EMF abatement and other environmental concerns). No more than 10% of the NPT Fund's committed capital will be invested in any one Portfolio Company.

Cinergy states that the NPT Fund has the dual goals of (1) creating competitive advantages for its investing partners by identifying and investing in companies that are in the process of developing and commercializing energy technologies [4] and (2) generating superior investment returns. Accordingly, Cinergy believes that both its system utility customers and its shareholders will benefit from the proposed investment in the Fund.

The sole general partner of the NPT Fund will be Nth Power Technologies Partners, L.P., a California limited partnership whose sole general partner in turn is Nth Power Technologies, Inc., a California corporation (collectively ''Nth Power''). Cinergy states that Nth Power's management has experience in energy technology, finance and development, including, in the case of the principals, an average of 20 years' experience in the energy, telecommunications and related industries. The remaining limited partnership interests are expected to be purchased principally by other utility companies or similar entities involved in the energy industry. An initial closing was scheduled to take place on or around June 15, 1996, with Cinergy's participation contingent upon receipt of the authorization requested herein.

In accordance with a limited partnership agreement to be executed (''Agreement''), the Partnership's term will be limited to 10 years from the later of the initial closing or the last date (generally, not to exceed in either case, one year from the date of initial closing) on which a limited partner is admitted to the Partnership or increases its capital commitment, provided that the general partner may extend the term for up to two additional two-year periods under certain circumstances. Profits and losses with respect to investment securities of the Partnership will be allocated 80% to all limited partners and 20% to the general partner, provided that any losses generally will not reduce the general partner's capital account to less than 1% of aggregate capital accounts. Through the seventh anniversary of the initial closing date, the Partnership will pay the general partner, quarterly in advance (and potentially subject to adjustment for changes in the consumer price index-urban consumers), and annual management fee equal to 2.5% of the aggregate committed capital; thereafter, the fee will be determined based on an annual budget procedure, provided that the fee shall not be less than 70% of the initial formula fee.

Under the terms of the Agreement, and applicable California law, the general partner will have the sole and exclusive right to manage, control and conduct the affairs of the Partnership, subject to limited approval rights of the limited partners. Specifically, under the Agreement, the approval of the limited partners is required only in the following circumstances:

(a) The vote of a majority of the limited partners is required (i) if capital commitments will exceed $75 million, (ii) for capital drawdowns that occur after the first anniversary of the later of the initial closing date or the last date on which a limited partner is admitted or increases its commitment, (iii) to approve the general partner's management fee if the term of the partnership is extended beyond 10 years, (iv) to extend the term of the partnership for up to two additional two-year periods, (v) to elect a successor tax matters partner, and (vi) to terminate the Partnership if the principals fail to devote substantially all of their business time to the Partnership and other specified entities.

(b) The vote of two-thirds in interest of the limited partners is required (i) to admit an additional general partner, (ii) to admit additional limited partners after the first anniversary of the initial closing date, (iii) for the distribution of non-marketable securities, (iv) for the Partnership to borrow, and (v) for the Partnership to exercise its right of first refusal upon certain proposed transfers by limited partners.

[2] Applicant expects that the aggregate amount of capital invested in the NPT Fund by all investors will not be less than $50 million (in which case Cinergy will have a 20% limited partnership interest) nor more than $75 million (in which case Cinergy will have a 13% limited partnership interest).

[3] Portfolio Companies in this category may develop and commercialize products involving an enhancement or retrofit of an existing larger product or system already commercially available, intended to render that product or system energy-efficient and to realize associated energy savings. On the other hand, Portfolio Companies in this category may also develop and commercialize (including by manufacture) products that are not enhancements or retrofits of an existing larger product or system, but rather are more appropriately characterized as stand-alone or replacement products or systems; in all these instances, the overriding purpose of the new product or system would be to compete against existing generically similar products or systems on the basis of superior energy-efficiency technology and the potential for realizing energy savings.

[4] Strategic and competitive benefits are expected to result from the fact that Fund investors will have better access to information about the Portfolio Companies and their products and exposure to their technologies before others do.

(c) The vote of 75% in interest of the limited partners is required to terminate the Partnership in certain events.

(d) The vote of all limited partners is required to extend the term of the Partnership (except as described in (a)(iv) above).

In addition, under California law, the limited partners have the right to vote on certain matters relating to the merger of the Partnership with one or more other entities.[5] Cinergy states that such limited voting rights are customary for limited partners in a venture capital fund and, in the aggregate, are less than those potentially available to limited partners consistent with applicable California law. In addition, Cinergy states that it will not consent to serve on the Fund Committee and, therefore, will have fewer voting rights than those of the other limited partners, who will be eligible to serve on that committee and potentially to vote on the matters within the Committee's purview.

Entergy Corporation, et al. (70–8871)

Entergy Corporation (''Entergy''), 639 Loyola Avenue, New Orleans, Louisiana 70113, a registered holding company, and its wholly owned subsidiary company, Entergy Power Inc. (''EPI''), 900 South Shackleford Road, Little Rock, Arkansas 72211 (collectively, ''Declarants''), have filed a declaration under sections 12(c) and 12(d) of the Act and rules 44, 46 and 54 thereunder.

By order dated August 27, 1990 (HCAR No. 25136), EPI was formed to supply electricity at wholesale to nonassociate companies and to acquire ownership interests in Unit No. 2 of the Independence Steam Electric Generating Station (''ISES 2'')[6] and related assets, as well as other utility assets. EPI currently owns a 31.5% unified ownership interest in ISES 2, a 15.75% undivided ownership interest in certain land and common facilities at the Independence Station, and a 15.75% undivided ownership interest in the Certificate of Environmental Compatibility and Public Need (''Certificate'') for the Independence Station. EPI also owned a 15.75% undivided ownership interest in certain leases, mine facilities and mine equipment located in Wyoming (''Wyoming Property'') used to supply coal to the Independence Station.

EPI now proposes to sell, prior to December 31, 1997, a portion of its interest in ISES 2 and related property to City Water & Light Plant of Jonesboro (''City Water & Light'') for an approximate purchase price of $37.8 million, representing an approximation of the depreciated book value of the assets at the time of sale. Specifically, City Water & Light will acquire from EPI (1) a 10% undivided ownership interest in ISES 2 (equivalent to 84 megawatt of capacity); (2) a 5% undivided ownership interest in the Certificate; (3) a 5% undivided ownership interest in the land and common facilities at the Independence Station; and (4) a 5% undivided ownership interest in the Wyoming Property.

EPI intends to apply the proceeds from the sale to its general corporate purposes, including to reduce its operating and maintenance expenses and to meet other working capital needs. EPI further proposes, from time to time through December 31, 1998, to pay dividends to Energy out of the unused proceeds from such sale.

For the Commission, by the Division of Investment Management, pursuant to delegated authority.

Margaret H. McFarland,

Deputy Secretary.

[FR Doc. 96–16452 Filed 6–26–96; 8:45 am]

BILLING CODE 8010–01–M

[5] Cinergy notes that, since its capital commitment to and corresponding limited partnership interest in the Fund will be relatively small and actions of the Fund's limited partners will require the assent of at least a majority (and often a supermajority) in interest thereof, Cinergy will have no practical ability—assuming it were so disposed—unilaterally to direct or control the action of the Fund's limited partners with respect to the few matters over which the limited partners exercise voting rights.

[6] The Independence Steam Electric Generating Station is a two-unit, coal-fired electric generating facility (''Independence Station'') located near Newark, Arkansas.

[Rel. No. IC–22035; 812–10098]

Trend Capital Management, Inc.; Notice of Application

June 21, 1996.

AGENCY: Securities and Exchange Commission (''SEC'').

ACTION: Notice of Application for Permanent Exemption under the Investment Company Act of 1940 (the ''Act'').

APPLICANT: Trend Capital Management, Inc. (''Trend'').

RELEVANT ACT SECTIONS: Order requested under section 9(c) of the Act granting an exemption from section 9(a) of the Act.

SUMMARY: Trend Capital requests an order from the prohibitions of section 9(a) to the extent necessary to relieve Trend of any ineligibility resulting from Trend's employment of an individual who is subject to a securities-related injunction.

FILING DATES: The application was filed on April 23, 1996 and amended on May 30, 1996. Applicant has agreed to file an amendment during the notice period, the substance of which is included in this notice.

HEARING OR NOTIFICATION OF HEARING: An order granting the application will be issued unless the SEC orders a hearing. Interested person may request a hearing by writing to the SEC's Secretary and serving applicant with a copy of the request, personally or by mail. Hearing requests should be received by the SEC by 5:30 p.m. on July 16, 1996 and should be accompanied by proof of service on applicant, in the form of an affidavit or, for lawyers, a certificate of service. Hearing requests should state the nature of the writers' interest, the reason for the request, and the issues contested. Persons who wish to be notified of a hearing may request notification by writing to the SEC's Secretary.

ADDRESSES: Secretary, SEC, 450 5th Street N.W., Washington, D.C. 20549. Applicant, 950 Interchange Tower, 600 South Highway 169, Minneapolis, Minnesota 55426.

FOR FURTHER INFORMATION CONTACT: Marianne H. Khawly, Staff Attorney, at (202) 942–0562, or Alison E. Baur, Branch Chief, at (202) 942–0564 (Division of Investment Management, Office of Investment Company Regulation).

SUPPLEMENTARY INFORMATION: The following is a summary of the application. The complete application may be obtained for a fee at the SEC's Public Reference Branch.

Applicant's Representations

1. Trend is a registered investment adviser under the Investment Advisers Act of 1940 and has one office in Minneapolis, Minnesota. Since 1992, Trend has served as an investment adviser to more than 17 institutional and individual clients. Trend does not have a parent company and does not own directly or indirectly any subsidiary companies.

2. Since 1992, Trend has employed Bryce Kommerstad (''Kommerstad'') as Director of Marketing and Sales. Kommerstad is responsible for general sales and marketing, long-term client development, and the servicing of existing customer accounts. Kommerstad does not develop or manage Trend's investment advisory services nor does he participate in decisions relating to the composition of Trend's model portfolios or the allocation of client assets among the various portfolios.

3. On July 18, 1988, Kommerstad was enjoined by the U.S. District Court for the District of Minnesota in an action commenced by the SEC (SEC Litigation

Release No. 11818 (July 26, 1988)). From September 1982 through February 1984, Kommerstad was a registered representative employed by Dean Witter Reynolds, Inc. at its Wayzata, Minnesota office. In its complaint, the SEC alleged that during this time Kommerstad solicited several customers to purchase shares of Continental Materials, Inc. about which he made misrepresentations and failed to state material facts. Without admitting or denying the allegations, Kommerstad consented to the entry of a final judgment of permanent injunction by the court (the ''Injunction''). The court enjoined Kommerstad from violating section 10(b) of the Securities Exchange Act of 1934 and rule 10b–5 thereunder and section 17(a) of the Securities Act of 1933. Kommerstad was also suspended by the SEC for 12 months. Since the entry of the Injunction in 1988, applicant states that Kommerstad has not been enjoined by any court or sanctioned by the SEC, any self-regulatory organization, or any state securities commission. Also since 1988, to the best of applicant's knowledge, there has not been a customer complaint relating to Kommerstad. Applicant also states that, to the best of its knowledge and after reasonable and appropriate inquiry, none of its other affiliated persons are disqualified under section 9 of the Act.

4. Trend proposes to enter into advisory or sub-advisory agreements with various registered investment management companies, pursuant to which Trend will agree to provide investment advisory services. As a result of the Injunction, however, Kommerstad is subject to the provisions of section 9(a)(2) of the Act and Trend is prohibited, under section 9(a)(3) of the Act, from, among other things, acting as investment adviser or depositor of any registered investment company, or principal underwriter for any registered open-end investment company unless an exemption is obtained pursuant to section 9(c).

5. When Tend learned, in connection with certain negotiations for an investment advisory agreement, that Kommerstad was statutorily disqualified under section 9(a) of the Act, Trend immediately developed and adopted the following written procedures relating to all prospective employees:

a. Whenever Trend intends to hire an employee, its compliance committee (the ''Compliance Committee'') conducts a background investigation of the prospective employee to determine whether the person is subject to a statutory disqualification.[1] Depending on the scope of other information available to Trend, the background investigation may include a fingerprint check by the local law enforcement agency, inquiries to registered securities associations, and discussions with previous securities related employers.

b. The prospective employee is required to complete an employment application that includes a questionnaire specifically designed to ensure disclosure of any criminal conviction, injunction, or other disqualifying condition.

c. If the prospective employee is subject to a statutory disqualification, then such person will not be offered employment until: (i) a section 9(c) order of exemption has been obtained; (ii) the Compliance Committee determines, with advice from counsel, that a section 9(c) order of exemption already exists that will cover the person's employment with Trend; or (iii) the Compliance Committee determines, with advice from counsel, that the SEC has adopted a rule that such person may rely upon.

d. If the prospective employee subject to a statutory disqualification is offered employment upon completion of one of the three steps set forth in paragraph (c), then such person's scope of employment will be restricted so that the employee will not act in any capacity as an investment adviser, or depositor of any registered investment company, or principal underwriter for any registered open-end investment company, registered unit investment trust, or registered face amount certificate company.

Applicant's Legal Analysis

1. Trend requests a permanent order under section 9(c) of the Act exempting it from the disqualification provisions of section 9(a) solely with respect to the Injunction. Trend requests that the relief extend to all entities that may become affiliated persons (as that term is defined in section 2(a)(3) of the Act) of Trend in the future. No affiliated person of Trend currently requires such relief or currently intends to rely upon the requested relief.

2. Section 9(a)(2) of the Act, in pertinent part, prohibits any person who has been enjoined from engaging in or continuing any conduct or practice in connection with the purchase or sale of a security from acting as an employee, officer, director, member of an advisory board, investment adviser, or depositor of any registered investment company, or principal underwriter for any registered open-end company, registered unit investment trust, or registered face amount certificate company. A company with an employee or other ''affiliated person'' ineligible to serve in any of these capacities under section 9(a)(2) is similarly ineligible under section 9(a)(3).

3. Section 9(c) of the Act provides that, upon application, the SEC shall grant an exemption from the provisions of section 9(a), either unconditionally or on appropriate temporary or other conditional basis, if it is established that the prohibitions of section 9(a), as applied to the applicant, are unduly or disproportionately severe, or the conduct of such person has been such as to not make it against the public interest or protection of investors to grant the application. In addition, 17 C.F.R. 200.30–5(a)(8) provides that the Division of Investment Management, under delegated authority, may issue a permanent order under section 9(c) if: the prohibitions of section 9(a) of the Act, as applied to the applicant, may be unduly or disproportionately severe, or the applicant's conduct has been such as not to make it against the public interest or the protection of investors to grant the exemption; the prohibitions arise under section 9(a)(3) of the Act solely because the applicant employs, or will employ, a person who is disqualified under section 9(a) (1) or (2) of the Act; and the employee does not and will not serve in any capacity directly related to providing investment advice to, or acting as principal underwriter for any registered open-end company, registered unit investment trust, or registered face amount certificate company.

4. Trend states that the SEC's 1988 action against Kommerstad did not relate to investment company activities. The terms of the Injunction do not bar Kommerstad from acting as an affiliated person of an investment adviser or depositor of any registered investment company, or principal underwriter for any registered open-end investment company, registered unit investment trust, or registered face amount certificate company. Trend argues that, given the absence of any direct relationship between the Injunction and Kommerstad's current and future activities at Trend, it would be unnecessary for the protection of investors and inappropriate in light of the circumstances to permit the Injunction to bar Trend from providing investment advisory or other services to a registered investment company.

[1] The Compliance Committee consists of Trend's president, and chief financial officer. These positions currently are held by Thomas G. Fox and Darrel R. Lynn, respectively.

5. Trend asserts that its investment advisory services are and will be developed and managed by Trend's chief investment officer, operations manager, or assistant portfolio manager (the ''Investment Management Team'').[2] Kommerstad is not, nor will be become, a member of the investment management team. He does not and will not serve in a policy-making role. He does not and will not participate in the management of Trend relating to providing investment advice to registered investment companies.[3] Kommerstad is not, and will not become, a member of Trend's board of directors and is not, and will not become, an officer of Trend.

6. Kommerstad is affiliated with Trend solely due to his status as an employee. He presently owns less than 5% of the outstanding voting securities of Trend. Kommerstad will not be permitted to own 5% or more of the outstanding voting securities, or otherwise become affiliated with Trend for any reason other than employment, absent any future relief that may specifically cover affiliations other than employment.

7. Trend believes, for the reasons stated above, that the section 9(a) prohibitions regarding the Injunction would be unduly or disproportionately severe and Kommerstad's conduct was not such as to make it against the public interest or protection of investors for the SEC to grant the requested relief.

Applicant's Condition

Applicant agrees that any order granted by the SEC pursuant to the application will be subject to the following conditions:

Neither Trend, nor any affiliated person of Trend relying upon the relief granted pursuant to the application, will employ Kommerstad in any capacity related directly to the provision of investment advice to, or acting as depositor of, any registered investment company, or to acting as principal underwriter for any registered open-end company, registered unit investment trust, or registered face amount certificate company.

[2] Currently, Thomas G. Fox serves as chief investment officer, Darrel R. Lynn serves as operations manager, and Wayne R. Eskew serves as assistant portfolio manager.

[3] If, in the future, Kommerstad's marketing and sales efforts for Trend bring him into contact with a prospective client that is a registered investment company, Kommerstad immediately will refrain from developing the registered investment company as a client and will refer the prospective client to Trend. Kommerstad will not be compensated, directly or indirectly, for such referrals.

For the Commission, by the Division of Investment Management, pursuant to delegated authority.

Margaret H. McFarland,

Deputy Secretary.

[FR Doc. 96–16453 Filed 6–26–96; 8:45 am]

BILLING CODE 8010–01–M

[Investment Company Act Release No. 22036; 811–6689]

Van Eck Trust; Notice of Application

June 21, 1996.

AGENCY: Securities and Exchange Commission (''SEC'').

ACTION: Notice of Application for Deregistration under the Investment Company Act of 1940 (the ''Act'').

APPLICANT: Van Eck Trust.

RELEVANT ACT SECTION: Section 8(f).

SUMMARY OF APPLICATION: Applicant requests an order declaring that it has ceased to be an investment company.

FILING DATE: The application was filed on May 14, 1996, and amended on June 14, 1996.

HEARING OR NOTIFICATION OF HEARING: An order granting the application will be issued unless the SEC orders a hearing. Interested persons may request a hearing by writing to the SEC's Secretary and serving applicant with a copy of the request, personally or by mail. Hearing requests should be received by the SEC by 5;30 p.m. on July 16, 1996, and should be accompanied by proof of service on the applicant, in the form of an affidavit or, for lawyers, a certificate of service. Hearing requests should state the nature of the writer's interest, the reason for the request, and the issues contested. Persons may request notification of a hearing by writing to the SEC's Secretary.

ADDRESSES: Secretary, SEC, 450 Fifth Street, N.W., Washington, D.C. 20549. Applicant, 99 Park Avenue, New York, New York 10016.

FOR FURTHER INFORMATION CONTACT: Diane L. Titus, Paralegal Specialist, at (202) 942–0584, or Alison E. Baur, Branch Chief, at (202) 942–0564 (Division of Investment Management, Office of Investment Company Regulation).

SUPPLEMENTARY INFORMATION: The following is a summary of the application. The complete application may be obtained for a fee from the SEC's Public Reference Branch.

Applicant's Representations

1. Applicant is an open-end, non-diversified management investment company organized as a Massachusetts business trust. Applicant is a ''feeder'' fund in a ''master/feeder fund'' complex and is composed of two series: Short-term World Income Fund—Class A and Class B.

2. On June 1, 1992, applicant registered under the Act and filed a registration statement on Form N–1A. No registration was filed under the Securities Act of 1933 (''Securities Act'') because applicant's beneficial interests were issued solely in private placement transactions that did not involve any public offering within the meaning of section 4(2) of the Securities Act. All of applicant's investors were ''accredited investors'' within the meaning of Regulation D under the Securities Act. Applicant's beneficial interests were never offered to the public.

3. Applicant's board of trustees determined that it was in the best interest of shareholders to liquidate its Class A and Class B shares, after being informed by Van Eck Associates Corporation, applicant's adviser (''Adviser'') that it no longer planned to reimburse applicant's expenses. On November 23, 1993, the board approved a plan of liquidation.

4. Proxy materials were filed with the SEC and mailed to shareholders for a shareholders meeting held on December 27, 1993. Applicant's shareholders approved the liquidation plan at the meeting.

5. On December 30, 1993, applicant redeemed the units held in Short-term World Income Fund Class A and Class B and satisfied its known obligations. On December 31, 1993, the liquidation value was distributed in cash to the Class A and B shareholders. The liquidation value was determined in the same manner as the Fund's net asset value.

6. All expenses incurred in connection with the liquidation were absorbed by the Adviser. No brokerage commissions were paid in connection with the liquidation.

7. Applicant has no security holders, liabilities or assets. Applicant is not a party to any litigation or administrative proceeding. Applicant is not now engaged, nor does it propose to engage, in any business activities other than those necessary for the winding up of its affairs.

8. Applicant will file a Certificate of Dissolution and other appropriate documentation in Massachusetts, as required by Massachusetts law.

For the SEC, by the Division of Investment Management, under delegated authority.

Margaret H. McFarland,

Deputy Secretary.

[FR Doc. 96–16454 Filed 6–26–96; 8:45 am]

BILLING CODE 8010–01–M

[Release No. 34–37336; File No. SR–Amex–95–57]

Self-Regulatory Organizations; Order Approving Proposed Rule Change and Notice of Filing and Order Granting Accelerated Approval of Amendment Nos. 2 and 3 to the Proposed Rule Change by the American Stock Exchange, Inc., Relating to the Listing of Flexible Exchange Options on Specified Equity Securities

June 19, 1996.

I. Introduction

On December 26, 1995, the American Stock Exchange, Inc. (''Amex'' or ''Exchange'') filed a proposed rule change with the Securities and Exchange Commission (''SEC'' or ''Commission''), pursuant to Section 19(b)(1) of the Securities Exchange Act of 1934 (''Act'') [1] and Rule 19b–4 thereunder, [2] to provide for the listing and trading of Flexible Exchange Options (''FLEX Options'') on specified equity securities (''FLEX Equity Options''). The Amex submitted to the Commission Amendment No. 1 to its proposal on March 18, 1996.[3]

Notice of proposal, as amended, was published for comment and appeared in the Federal Register on April 8, 1996.[4] The Amex submitted to the Commission Amendment No. 2 to its proposal on April 15, 1996.[5] The Amex submitted to the Commission Amendment No. 3 to the Commission on June 19, 1996.[6] No comment letters were received on the proposed rule change. This order approves the Exchange's proposal, as amended.

II. Background

The purpose of the Exchange's proposal is to provide a framework for the Exchange to list and trade equity options that give investors the ability, within specified limits, to designate certain of the terms of the options. In recent years, an over-the-counter (''OTC'') market in customized equity options has developed which permits participants to designate the basic terms of the options, including size, term to expiration, exercise style, exercise price, and exercise settlement value, in order to meet their individual investment needs. Participants in this OTC market are typically institutional investors, who buy and sell options in large-size transactions through a relatively small number of securities dealers. To compete with this growing OTC market in customized equity options, the Exchange propose to expand its FLEX Options rules [7] to permit the introduction of trading in FLEX Options on specified equity securities that satisfy the Exchange's listing standards for equity options. The Exchange's proposal will allow FLEX Equity Option market participants to designate the following contract terms: (1) Exercise price; (2) exercise style (i.e., American,[8] European,[9] or capped [10]); (3) expiration date; [11] and (4) option type (put, call, or spread).

Currently, the Amex can list and trade FLEX Options on several broad-based market indexes composed of equity securities (''FLEX Index Options'').[12] The Exchange believes that FLEX Equity Options will further broaden the base of institutional investors that use FLEX Options to manage their trading and investment risk.

For the most part, the Exchange represents that its current rules governing FLEX Index Options will apply to FLEX Equity Options. Certain changes to the Exchange's existing FLEX Options rules, however, are proposed to address the special characteristics of FLEX Equity Options. Specifically, the Exchange proposes to add several new definitions to accommodate the introduction of trading in FLEX Equity Options,[13] and to revise certain other rules governing FLEX Options and their trading, as described below.

As with FLEX Index Options, The Options Clearing Corporation (''OCC'') will be the issuer and guarantor of all FLEX Equity Options. Similarly, as with FLEX Index Options, the Commission has designated FLEX Equity Options as standardized options for purposes of the options disclosure framework established under Rule 9b–1 of the Act.[14]

III. Description of the Proposal

The Exchange proposes to revise its rules concerning the terms of FLEX Options to make specific reference to FLEX Equity Options.[15] In particular, FLEX Option transactions will be limited to transactions in options on underlying securities that have been approved by the Exchange inaccordance with Rule 915.[16] Additionally, FLEX Equity Options will have (1) a maximum term of three years, (2) a minimum size of 250 contracts for an opening transaction in a new series, and (3) a minimum size of 100 contracts for

---

[1] 15 U.S.C. 78s(b)(1).

[2] 17 CFR 240.19b–4.

[3] In Amendment No. 1 to its proposed rule change, the Amex proposes: (1) Position and exercise limits for FLEX Equity Options that are three times the limits for Non-FLEX Equity Options; (2) crossing procedures and a guaranteed minimum right of participation for a Submitting Member seeking to cross a public customer FLEX Equity Option order; and (3) settlement of FLEX Index Options in designated foreign currencies, in addition to U.S. dollars as currently provided. *See* Letter from Claire McGrath, Special Counsel, Derivatives Securities, to Michael Walinskas, Special Counsel, Office of Market Supervision (''OMS''), Division of Market Regulation (''Market Regulation''), Commission, dated March 14, 1996. (''Amendment No. 1'').

[4] *See* Securities Exchange Act Release No. 37053 (March 29, 1996), 61 FR 15537.

[5] In Amendment No. 2, the Exchange proposes to: (1) Include a reference to the specific indexes approved for FLEX Options trading in Rules 903G(a)(2)(i) and 906G(a); (2) revise Amendment No. 1 regarding the proposed guaranteed minimum right of participation for a Submitting Member seeking to cross a public customer FLEX Equity Option order, such that the Submitting Member will be permitted to execute the contra side of the trade that is the subject of the Request for Quotes, to the extent of at least 25% of the trade under specific circumstances; and (3) include subparagraph (c) to Rule 909G so that FLEX Equity Options specialists shall comply with Rules 171 and 950(h) regarding equity option specialist's financial requirements. *See* Letter from Claire McGrath, Special Counsel, Derivatives Securities, Amex, to Michael Walinskas, Special Counsel, OMS, Market Regulation, Commission, dated April 15, 1996 (''Amendment No. 2'').

[6] In Amendment No. 3, the Amex proposes to amend Rule 903G(a)(3) to make it clear that bids and offers responsive to FLEX Requests for Quotes must be stated in terms of the designated currency in the Request for Quotes. *See* Letter from Claire McGrath, Special Counsel, Amex, to John Ayanian, Attorney, OMS, Market Regulation, Commission, dated June 19, 1996 (''Amendment No. 3'').

[7] *See* Amex Rules 900G through 909G.

[8] An American-style equity option is one that may be exercised at any time on or before the expiration date.

[9] A European-style equity option is one that may be exercised only during a limited period of time prior to expiration of the option.

[10] A capped-style equity option is one that is exercised automatically prior to expiration when the cap price is less than or equal to the closing price of the underlying security for calls or when the cap price is greater than or equal to the closing price of the underlying security for puts.

[11] The proposal, however, requires that the expiration date of a FLEX Equity Option may not fall on a day that is on, or within two business days of the expiration date of a Non-FLEX Equity Option.

[12] *See* Securities Exchange Act Release Nos. 32781 (August 20, 1993), 58 FR 45360 (August 27, 1993) (order approving the trading of FLEX Index Options on the Major Market, Institutional, and S&P MidCap Indexes), and 33262 (December 1, 1993), 58 FR 64622 (December 8, 1993) (order approving the trading of FLEX Index Options on the Japan Index).

[13] In addition to the term FLEX Equity Options, the proposal also defines the terms ''FLEX Index Options,'' ''Non-FLEX Options,'' and ''Non-FLEX Equity Option.'' *See* Amex Rule 900G.

[14] *See* Securities Exchange Act Release No. 31910 (February 23, 1993), 58 FR 12056 (March 2, 1993) (''9b–1 Order''). As described in Section V *infra*, and for the same reasons stated in the 9b–1 Order, FLEX Equity Options are deemed ''standardized options'' for purposes of the Rule 9b–1 options disclosure framework.

[15] *See* Amex Rule 903G.

[16] Amex Rule 915 contains initial listing standards for a security to be eligible for options trading. The Exchange proposes to be able to trade FLEX Options on any options-eligible security regardless of whether standardized Non-FLEX options overlie that security, and regardless of whether such Non-FLEX options trade on the Exchange.

an opening or closing transaction in a series in which there is already open interest (or any lesser amount in a closing transaction that represents the remaining underlying size). The minimum value size for FLEX Quotes [17] in response to a Request for Quotes [18] in FLEX Equity Options is the lesser of 100 contracts or the remaining underlying size in a closing transaction.

The Exchange also proposes to allow exercise prices and premiums for FLEX Equity Options to be stated in dollar amounts or percentages, with premiums rounded to the nearest minimum tick and exercise prices rounded to the nearest one-eighth. The exercise of FLEX Equity Options will be by physical delivery of the underlying security, and the exercise-by-exception procedures of OCC will apply.[19]

The trading procedures applicable to FLEX Equity Options will be subject to many of the same rules that apply to equity options traded on the Exchange, and are similar to those that apply to FLEX index Options. In particular, FLEX registered specialists are obligated to respond to a Request for Quotes in respect of FLEX Equity Options as they are with FLEX Index Options. Financial requirements for FLEX Equity Option registered specialists, however, differ from those imposed upon FLEX Index Option registered specialists. FLEX Index Option registered specialists are required to maintain at least $1 million net liquidating equity and/or $1 million net capital, as applicable.[20] FLEX Equity Option registered specialists must maintain a cash or liquid asset position in the amount of $600,000 or in an amount sufficient to assume a position of sixty option contracts of each class of FLEX Equity options in which such specialist is registered, whichever amount is greater.[21]

The Exchange represents that the rules governing priority of bids and offers for FLEX Equity Options are also similar to those that apply to FLEX Index Options, except that in the case of FLEX Equity Options, a guaranteed minimum right of participation is provided to an Exchange member that initiates a Request for Quotes and indicates an intention to cross or act as principal on the trade.[22] The proposed rule change would provide that a member who submits a Request for Quotes in respect of a FLEX Equity Option and indicates an intention to cross or act as principal on the trade, and who matches or improves the BBO during the BBO Improvement Interval, has a priority right to execute the contra side of the trade for at least twenty-five percent (25%) of the trade.[23]

The Exchange is proposing position limits and exercise limits for FLEX Equity Options that are larger than the limits applicable to Non-FLEX Equity Options for the same reasons that the position and exercise limits for FLEX Index Options are larger than those applicable to Non-FLEX Index Options. The limits have been set at three times the limit applicable to Non-FLEX Equity Options. Position and exercise limits for FLEX Equity Options are set forth below as compared to existing limits for Non-FLEX Equity Options on the same underlying security.[24]

Non-FLEX equity position limit	FLEX equity position limit
4,500 contracts	13,500 contracts.
7,500 contracts	22,500 contracts.
10,500 contracts	31,500 contracts.
20,000 contracts	60,000 contracts.
25,000 contracts	75,000 contracts.

The applicable position and exercise limit tiers for Non-FLEX Equity Options are based on the number of outstanding shares and trading volume of the underlying security.[25] This proposal does not alter the applicable tier criteria set forth in the Equity Option Position Limit Approval Orders.

As is currently the case for FLEX Index Options, it is proposed that there will be no aggregation of positions or exercises in FLEX Equity Options with positions or exercises in Non-FLEX Equity Options for purposes of the limits.

The Exchange also proposes to provide that the expiration date of a FLEX Equity Option may not occur on a day that falls on, or within, two business days of the expiration date of a Non-FLEX Equity Option. This is intended to eliminate the possibility that the exercise of FLEX Equity Options at expiration will cause any untoward pressure on the market for an underlying security at the same time as Non-FLEX Equity Options expire. The Exchange proposes that this change will also apply to FLEX Index Options.[26]

The Exchange also proposes to amend FLEX Index Option rules to conform to certain rules currently in place at the Chicago Board Options Exchange, Inc.[27] Specifically, the Exchange proposes to amend its rules to provide for the trading and settlement of FLEX Index Options in select foreign currencies. Currently, FLEX Index Options trade and settle in U.S. dollars only. The Exchange now proposes to trade and settle FLEX Index Options in Canadian Dollars, British Pounds, Japanese Yen, Deutsche Marks, Swiss Francs, French Francs, or European Currency Units. The Exchange believes that this change will increase the utility and, thus, the attractiveness of FLEX Index Options, which in turn should broaden the base of domestic and international institutional investors that use exchange-traded FLEX Index Options to manage their trading and investment risk.

The Exchange believes the proposed rule change will improve the efficiency and transparency of the equity option markets and the markets in the underlying equities, and bring transactions which are currently subject to little or no regulatory oversight under a regulatory framework that is fully consistent with the regulation of common stock trading and reporting.

IV. Discussion

The Commission finds that the proposals are consistent with the requirements of the Act and the rules and regulations thereunder applicable to a national securities exchange, and, in particular, the requirements of Sections 6(b)(5) [28] and 11A [29] of the Act. Specifically, the Commission finds that the Exchange's proposal is designed to provide investors with a tailored or customized product for eligible equity options that may be more suitable to their investment needs. Moreover, consistent with Section 11(a), the proposal should encourage fair competition among brokers and dealers and exchange markets, by allowing the Exchange to compete with the growing

[17] *See* Amex Rule 900G(b)(4).

[18] *See* Amex Rule 900(b)(3).

[19] OCC Rule 805 provides for automatic exercise of in-the-money options at expiration without the submission of an exercise notice to the OCC if the price of the security underlying the option is at or above a certain price (for calls) or at or below a certain price (for puts); and the non-exercise of an option at expiration if the price of the security underlying the option does not satisfy such price levels. *See* OCC Rule 805.

[20] *See* Amex Rule 909G(a).

[21] *See* Amex Rule 909G(c). *See also* Amendment No. 2, *supra* note 5.

[22] *See* Amex Rule 904G(e)(iii).

[23] *See* Amendment No. 1, *supra* note 3.

[24] *See* Amendment No. 1, *supra* note 3.

[25] *See* Securities Exchange Act Release Nos. 36409 (October 23, 1995), 60 FR 55399 (October 31, 1995) (File Nos. SR–NYSE–95–31; SR–PSE–95–25; SR–Amex–95–42; and SR–Phlx–95–71); and 36371 (October 13, 1995), 60 FR 54269 (October 20, 1995) (File No. SR–CBOE–95–42) (Collectively the ''Equity Option Position Limit Approval Orders'').

[26] The Exchange currently provides that the expiration date of a FLEX Index Option may not occur during this time period. The proposed rule change merely clarifies this requirement.

[27] *See* Securities Exchange Act Release No. 34203 (June 13, 1994), 59 FR 31658 (June 20, 1994) (File No. SR–CBOE–93–33).

[28] 15 U.S.C. 78f(b)(5).

[29] 15 U.S.C. 78k–1.

OTC market in customized equity options.

The Commission believes the Exchange's proposal reasonably addresses its desire to meet the demands of sophisticated portfolio managers and other institutional investors who are increasingly using the OTC market in order to satisfy their hedging needs. Additionally, the Commission believes that the Exchange's proposal will help promote the maintenance of a fair and orderly market, consistent with Sections 6(b)(5) and 11(a) of the Act, because the purpose of the proposal is to extend the benefits of a listed, exchange market to equity options that are more flexible than current listed equity options and that currently trade OTC. The benefits of the Exchange's options market include, but are not limited to, a centralized market center, an auction market with posted transparent market quotations and transaction reporting, parameters and procedures for clearance and settlement, and the guarantee of OCC for all contracts traded on the Exchange.

As indicated above, the trading procedures applicable to FLEX Equity Options will be subject to many of the same rules that apply to equity options traded on the Exchange, and are similar to those that apply to FLEX Index Options. The Commission believes the Exchange's trading procedures for FLEX Equity Options are reasonably designed to provide some of the benefits of an Exchange auction market along with features of a negotiated transaction between investors. In approving the proposal, the Commission recognizes that the Exchange's proposed FLEX Equity Option trading program will allow the trading of option contracts of substantial value, for which continuous quotations may be difficult to sustain. The Commission believes that the Exchange has adequately addressed these concerns by establishing procedures for quotes upon request, which must be firm for a designated period of time and which will be disseminated through the Options Price Reporting Authority (''OPRA'').

Additionally, the Commission believes that the Exchange's proposal to provide a minimum right of participation of at least 25% of the trade to Exchange members who initiate Requests for Quotes in respect of FLEX Equity Options and indicate an intention to cross or act as principal on the trade, is consistent with the Act. In addition, under Amex rules, such transactions must, in all cases, be in compliance with the priority, parity, and precedence requirements of Section 11(a) of the Act,[30] and Rule 11al–1(T)[31] promulgated thereunder. These provisions set forth, among other things, the conditions in which members must yield priority to public customers' bids and offers at the same price.

The Commission believes that market impact concerns are reduced for FLEX Equity Options because expiration of these equity options will not correspond to the normal expiration of Non-FLEX Equity Options, will never expire on any ''Expiration Friday.'' More specifically, the expiration date of a FLEX Option may not occur on a day that is on, or within, two business days of the expiration date of a Non-FLEX Option. The Commission believes that this should reduce the possibility that the exercise of FLEX Options at expiration will cause any additional pressure on the market for underlying securities at the same time that Non-FLEX Options expire.

Nevertheless, because the position limits for FLEX Equity Options are much higher than those currently existing for outstanding exchange-traded equity options and open interest in one or more FLEX Equity Option series could grow to significant levels, it is possible that FLEX Equity Options might have an impact on the securities markets for the securities underlying FLEX Equity Options. The Commission expects the Exchange to monitor the actual effect of FLEX Equity Options once trading commences and take prompt action (including timely communication with the self-regulatory organizations responsible for oversight of trading in the underlying securities) should any unusual market effects develop.

The Exchange represents that FLEX Equity Options will allow them to compete with OTC markets and help meet the demand for customized equity options products by institutional investors. The minimum value sizes for opening transactions in FLEX Equity Options are designed to appeal to institutional investors, and it is unlikely that most retail investors would be able to engage in options transactions at that size. Nevertheless, the FLEX Equity Options minimum size is much smaller than that for FLEX Index Options. Accordingly, the Commission requests that the Exchange monitor the comparative levels of institutional and retail investor open interest in FLEX Equity Options for one year from the commencement of its FLEX Equity Option trading program, and provide a report to the Commission's Division of Market Regulation with its findings.

The Commission notes that effective surveillance guidelines are essential to ensure that the Exchange has the capacity to adequately monitor trading in FLEX Equity Options for potential trading abuses. The Commission's staff has reviewed Amex's surveillance program and believes it provides a reasonable framework in which to monitor the trading of FLEX Equity Options on its trading floor and detect as well as deter manipulation activity and other trading abuses.

In order to ensure adequate systems processing capacity to accommodate the additional options listed in accordance with the FLEX Equity Options program, OPRA has concluded that the additional traffic generated by FLEX Equity Options traded on the Amex is within OPRA's capacity.[32]

Finally, the Commission believes that the Amex's proposal to expand the list of variable FLEX Index Option contract terms to include certain designated foreign currencies is a reasonable response by the Exchange to meet the demands of sophisticated portfolio managers and other institutional investors. Additionally, the Commission believes that the Amex's proposal will help to promote the maintenance of a fair and orderly market because it extends the benefits of a listed exchange market to FLEX Index Options that trade and settle in certain designated foreign currencies.

The Commission believes that investors should benefit from the additional flexibility by permitting them to designate quotation and settlement terms in various foreign currencies while continuing to ensure adequate investor protection the trading of these products. The potential risk of settling FLEX Options in foreign currencies rather than U.S. dollars is also disclosed in the ODD pursuant to Rule 9b–1 of the Act.[33]

The Commission finds good cause for approving Amendment No. 2 prior to the thirtieth day after the date of publication of notice of filing thereof in the Federal Register. Specifically, this amendment proposes to: (1) Include a reference to the specific indexes approved for FLEX Options trading in Rules 903G(a)(2)(i) and 906G(a); (2) revise Amendment No. 1 regarding the proposed guaranteed minimum right of participation for a Submitting Member

[30] 15 U.S.C. 78k(a).

[31] 17 CFR 240.11a1–1(T).

[32] *See* Letter from Joe Corrigan, Executive Director, OPRA, to Michael Walinskas, Special Counsel, OMS, Market Regulation, Commission, dated April 19, 1996 (''OPRA Capacity Letter'').

[33] *See* Securities Exchange Act Release No. 33582 (February, 1994).

seeking to cross a public customer FLEX Equity Option order, such that the Submitting Member will be permitted to execute the contra side of the trade that is the subject of the Request for Quotes, to the extent of at least 25% of the trade under specific circumstances; and (3) include subparagraph (c) to Rule 909G to indicate the FLEX Equity Options specialists must comply with Rules 171 and 950(h) regarding equity option specialist's financial requirements. The Commission does not believe that the amendments raise any new or unique regulatory issues. These amendments also strengthen the proposal by clarifying certain crossing transaction procedures and specialists financial requirements as described above. Accordingly, the Commission believes, consistent with Section 6(b)(5) of the Act, that good cause exists, to approve Amendment No. 2 to the proposal on an accelerated basis.

The Commission finds good cause for approving Amendment No. 3 prior to the thirtieth day after the date of publication of notice of filing thereof in the Federal Register. Specifically, this amendment proposes to amend Rule 903G(a)(3) to make it clear that bids and offers responsive to FLEX Requests for Quotes must be stated in terms of the designated currency in the Request for Quotes. The Commission notes that the proposed amendment conforms Amex's rules to CBOE's rules regarding the trading and settlement of FLEX Index Options in certain designated foreign currencies. The Commission does not believe that the amendment raises any new or unique regulatory issues. Accordingly, the Commission believes, consistent with Section 6(b)(5) of the Act, that good cause exists, to approve Amendment No. 2 to the proposal on an accelerated basis.

Interested persons are invited to submit written data, views and arguments concerning Amendment Nos. 2 and 3 to the proposed rule change. Persons making written submissions should file six copies thereof with the Secretary, Securities and Exchange Commission, 450 Fifth Street, N.W., Washington, D.C. 20549. Copies of the submission, all subsequent amendments, all written statements with respect to the proposed rule change that are filed with the Commission, and all written communications relating to the proposed rule change between the Commission and any person, other than those that may be withheld from the public in accordance with the provisions of 5 U.S.C. § 552, will be available for inspection and copying at the Commission's Public Reference Section, 450 Fifth Street, N.W., Washington, D.C. 20549. Copies of such filing will also be available for inspection and copying at the principal office of the Exchange. All submissions should refer to SR–Amex-95–57 and should be submitted by July 18, 1996.

V. Conclusion

For the reasons discussed above, the Commission finds that the proposal is consistent with the Act and Sections 6 and 11(a) of the Act in particular. In addition, the Commission finds pursuant to Rule 9b–1 under the Act, that FLEX Options, including FLEX Equity Options, and FLEX Index Options traded and settled in certain designated foreign currencies, are standardized options for purposes of the options disclosure framework established under Rule 9b–1 of the Act.[34] Apart from the flexibility with respect to strike prices, expiration dates, exercise styles, and settlement (for FLEX Index Options), all of the other terms of FLEX Options are standardized pursuant to OCC and Amex rules. Standardized terms include matters such as exercise procedures, contract adjustments, time of issuance, effect of closing transactions, restrictions on exercise under OCC rules, margin requirements, and other matters pertaining to the rights and obligations of holders and writers.

It is therefore ordered, pursuant to Section 19(b)(2) of the Act,[35] that the proposal (File No. SR–Amex-95–57), as amended, is approved.

For the Commission, by the Division of Market Regulation, pursuant to delegated authority.[36]

Margaret H. McFarland,

Deputy Secretary.

[FR Doc. 96–16367 Filed 6–26–96; 8:45 am]

BILLING CODE 8010–01–M

[34] 17 CFR 240.9b–1(a)(4). As part of the original approval process of the FLEX Options framework, the Commission delegated to the Director of the Division of Market Regulation the authority to authorize the issuance of orders designating securities as ''standardized options'' pursuant to Rule 9b–1(a)(4) under the Act. *See* Securities Exchange Act Release No. 31911 (February 23, 1993), 58 FR 11792 (March 1, 1993).

[35] 15 U.S.C. 78s(b)(2).

[36] 17 CFR 200.30–3(a)(12).

[Release No. 34–37337; File No. SR–CBOE–96–20]

Self-Regulatory Organizations; Order Approving a Proposed Rule Change by the Chicago Board Options Exchange, Incorporated, Relating to FLEX Equity Options

June 19, 1996.

I. Introduction

On March 18, 1996, the Chicago Board Options Exchange, Incorporated (''CBOE'' or ''Exchange'') filed a proposed rule change with the Securities and Exchange Commission (''SEC'' or ''Commission''), pursuant to Section 19(b)(1) of the Securities Exchange Act of 1934 (''Act'')[1] and Rule 19b–4 thereunder,[2] to amend certain rules pertaining to FLEX Equity Options.

Notice of the proposal was published for comment and appeared in the Federal Register on April 8, 1996.[3] No comment letters were received on the proposed rule change. This order approves the Exchange's proposal.

II. Description of the Proposal

The Exchange proposes to amend two rules pertaining to FLEX Equity Options. First, the Exchange proposes to amend Interpretation and Policy .05 under Exchange Rule 5.5 in order to provide that new series of FLEX Equity Options may be opened during the month in which they will expire, so long as options of that series expire no earlier than the day following the day the series is added. The Exchange believes that this will provide maximum flexibility to users of FLEX Equity Options, while avoiding the administrative costs that would be associated with options that expire on the day they are issued.

Second, the Exchange proposes to amend Rule 24A.5(e) in order to provide a minimum right of participation to Exchange members who initiate Requests for Quotes in respect of FLEX Equity Options and indicate an intention to cross or act as principal on the trade, similar to the right of participation that applies under existing Exchange rules in respect of FLEX Index Options. Under existing Rule 24A.5(e)(iii), a member who submits a Request for Quotes in respect of a FLEX Index Option and indicates an intention to cross or act as principal on the trade, and who matches the current best bid or offer (''BBO'') during the BBO

[1] 15 U.S.C. 78s(b)(1).

[2] 17 CFR 240.19b–4.

[3] *See* Securities Exchange Act Release No. 37051 (March 29, 1996), 61 FR 15543.

Improvement Interval, has priority to execute the contra side of the trade up to the greater of (i) one-half of the trade, (ii) $1 million Underlying Equivalent Value, or (iii) the remaining Underlying Equivalent Value on a closing transaction valued at less than $1 million. If the member improves the BBO and any other FLEX-participating member matches the improved BBO, the submitting member has priority to execute the contra side of the trade up to the greater of (i) two-thirds of the trade, (ii) $1 million Underlying Equivalent Value, or (iii) the remaining Underlying Equivalent Value on a closing transaction valued at less than $1 million. By contrast, under current Exchange rules no priority right of participation in a principal or agency cross is given to a member who submits a Request for Quotes in respect of a FLEX Equity Option, even if the submitting member matches or improves the BBO.

The proposed rule change would provide that a member who submits a Request for Quotes in respect of a FLEX Equity Option and indicates an intention to cross or act as principal on the trade, and who matches or improves the BBO during the BBO Improvement Interval, has a priority right to execute the contra side of the trade for at least twenty-five percent (25%) of the trade.[4] The Exchange believes that the proposed rule change will encourage members to bring FLEX Equity Option orders to CBOE and to commit their capital to the FLEX Equity Options market on CBOE, and thereby contribute to the liquidity of that market, by guaranteeing them a minimum right of participation in the other side of any trade they bring to the market if they are prepared to match or improve the BBO.

The Exchange believes that by providing investors with the flexibility to request quotes for options that expire as early as the day following the day they are issued, and by encouraging members to submit requests for quotes in FLEX Equity Options and to commit capital to CBOE's FLEX Equity Option market, the proposed rule change furthers the objectives of Section 6(b)(5) of the Act to remove impediments to and perfect the mechanism of a free and open market in securities, and to protect investors and the public interest.

[4] The proposed rule change amends the language of Rule 24A.5(e) to state that a submitting member will ''have priority'' to execute the specified share of a trade, instead of that he will ''be permitted'' to execute that share, in order to clarify that a member may cross more than the designated share as to which he has priority if no one else is willing to trade at the same or a better price.

III. Discussion

The Commission finds that the proposed rule change is consistent with the requirements of the Act and the rules and regulations thereunder applicable to a national securities exchange, and, in particular, the requirements of Section 6(b)(5) of the Act.[5] The Commission believes that the Exchange's proposal to provide that new series of FLEX Equity Options may be opened so long as they do not expire on the same day, reasonably addresses the Exchange's desire to meet the demands of sophisticated portfolio managers and other institutional investors who are increasingly using the OTC market in order to satisfy their hedging needs. In this regard, the change will provide FLEX Equity Option users with more flexibility in establishing expiration dates to better meet their hedging needs. Market participants wanting to open a new series of FLEX Equity Options with a short duration will still have to meet the 250 contract minimum requirement. This should help to ensure that such FLEX Equity Options are opened for legitimate trading needs.

The Commission further notes that expiration of FLEX Equity Options may not correspond to the normal expiration of Non-FLEX Equity Options. More specifically, the expiration date of a FLEX Equity Option may not occur on a day that is on, or within, two business days of the expiration date of a Non-FLEX Equity Option.[6] Moreover, as stated in the FLEX Equity Option Approval Order, the Commission expects the Exchange to take prompt action (including timely communication with the self-regulatory organizations responsible for oversight of trading in the underlying securities) should any unusual market effects develop.[7]

Additionally, the Commission believes that the Exchange's proposal to provide a minimum right of participation of at least 25% of the trade to Exchange members who initiate Requests for Quotes in respect of FLEX Equity Options and indicate an intention to cross or act as principal on the trade, is consistent with the Act. In addition, under CBOE rules, such transactions must, in all cases, be in compliance with the priority, parity, and precedence requirements of Section 11(a) of the Act,[8] and Rule 11a1–1(T)[9] promulgated thereunder. These provisions set forth, among other things, the conditions in which members must yield priority to public customers' bids and offers at the same price.

[5] 15 U.S.C. 78f(b)(5).

[6] *See* Securities Exchange Act Release No. 36841 (February 14, 1996) (File No. SR–CBOE–95–43) (''FLEX Equity Option Approval Order'').

[7] *Id.*

[8] 15 U.S.C. 78k(a).

[9] 17 CFR 240.11a1–1(T).

It is therefore ordered, pursuant to Section 19(b)(2) of the Act,[10] that the proposed rule change (File No. SR–CBOE–96–20) is approved.

For the Commission, by the Division of Market Regulation, pursuant to delegated authority.[11]

Margaret H. McFarland,

Deputy Secretary.

[FR Doc. 96–16368 Filed 6–26–96; 8:45 am]

BILLING CODE 8010–01–M

[10] 15 U.S.C. 78s(b)(2).

[11] 17 CFR 200.30–3(a)(12).

[Release No. 34–37338; File No. SR–CBOE–96–28]

Self-Regulatory Organizations; Notice of Filing and Order Granting Accelerated Approval of Proposed Rule Change by Chicago Board Options Exchange, Incorporated Relating to the Selection of Underlying Securities on Which FLEX Equity Options May Be Traded on the Exchange

June 19, 1996

Pursuant to Section 19(b)(1) of the Securities Exchange Act of 1934 (''Act''), 15 U.S.C. 78s(b)(1), notice is hereby given that on April 22, 1996, the Chicago Board Options Exchange, Incorporated (''CBOE'' or ''Exchange'') filed with the Securities and Exchange Commission (''Commission'') the proposed rule change as described in Items I and II below, which Items have been prepared by the CBOE. The Commission is publishing this notice to solicit comments on the proposed rule change from interested persons.

I. Self-Regulatory Organization's Statement of the Terms of Substance of the Proposed Rule Change

The Exchange proposes to amend CBOE Rule 24A.4(c)(1) governing the selection of underlying securities on which FLEX Equity Options may be traded on the Exchange to eliminate the requirement that the underlying securities must be the subject of Non-FLEX Equity Option trading on the Exchange.

The text of the proposed rule change is available at the Office of the Secretary, CBOE and at the Commission.

II. Self-Regulatory Organization's Statement of the Purpose of and Statutory Basis for, the Proposed Rule Change

In its filing with the Commission, CBOE included statements concerning the purpose of and basis for the proposed rule change and discussed any comments it received on the proposed rule change. The text of these statements may be examined at the places specified in Item IV below. The CBOE has prepared summaries, set forth in sections A, B, and C below, of the most significant aspects of such statements.

A. Self-Regulatory Organization's Statement of the Purpose of, and Statutory Basis for, the Proposed Rule Change

The CBOE proposes to trade FLEX Equity Options on qualified underlying securities that have been approved by the Exchange for options trading whether or not Non-FLEX Equity Options on those same underlying securities are traded on the Exchange. Under CBOE Rule 24A. 4(c)(1), only those qualified and approved underlying securities that are the subject of Non-FLEX Equity Option trading on the Exchange may serve as underlying securities of FLEX Equity Options traded on the Exchange. In this respect, Rule 24A.4(c)(1) differs from the rules proposed by the American Stock Exchange (''Amex'') and the Philadelphia Stock Exchange (''Phlx'') in respect of FLEX Equity Option trading on those exchanges.[1] Proposed Amex Rule 903G(c) and proposed Phlx Rule 1069A(a)(1)(B) are substantively identical in that any options-eligible security, regardless of whether the security is the subject of Non-FLEX Equity Options traded on the exchange, may underlie a FLEX Equity Option. CBOE Rule 24A.4(c)(1), on the other hand, requires that an underlying security must be ''the subject of Non-FLEX equity Options traded on the Exchange'' to be eligible for FLEX Equity Options trading.

CBOE initially believed it was appropriate to limit FLEX Equity Options to those underlying securities on which it provides a Non-FLEX Equity Options market. Such a limitation would likely facilitate market-making in FLEX Equity Options, and it would avoid investor confusion that could arise if an exchange were to maintain a market in one kind of option but not the other on the same underlying stock. CBOE incorporated this limitation in its rules in the expectation that other exchanges that saw fit to copy its FLEX Equity Options program in all other respects would include this provision in their rules as well. The CBOE believes that in order to remain competitive with the exchanges that propose to list Equity Option on eligible underlying securities regardless of whether that exchange lists Non-FLEX Equity Options overlying that security, the CBOE must submit a similar proposed rule change.

By permitting CBOE to compete equally with other exchanges in listing FLEX Equity Options on qualified underlying securities, and in light of the Congressional finding embodied in Section 11A(a)(1)(C)(ii) of the Act that it is in the public interest and appropriate for the protection of investors and the maintenance of fair and orderly markets to assure fair competition among exchange markets, the Exchange believes that the proposed rule change is consistent with and furthers the objectives of Section 6(b)(5) of that Act to remove impediments to and perfect the mechanism of a free and open market and a national market system and to protect investors and the public interest.

B. Self-Regulatory Organization's Statement on Burden on Competition

CBOE does not believe that the proposed rule change will impose any burden on competition.

C. Self-Regulatory Organization's Statement on Comments on the Proposed Rule Change Received From Members, Participants or Others

No written comments were solicited or received with respect to the proposed rule change.

III. Commission's Findings and Order Granting Accelerated Approval of the Proposed Rule Change

The Exchange has requested that the proposed rule change be given accelerated effectiveness pursuant to section 19(b)(2) of the Act. The Commission finds that the proposed rule change is consistent with the requirements of the Act and the rules and regulations thereunder applicable to a national securities exchange, and, in particular the requirements of Section 6(b)(5) and 11A thereunder. The Commission believes that the proposed rule change is reasonable in that it promotes fair competition among exchanges, consistent with Section 11A of the Act, and will perfect the mechanism of a free and open market and serve to protect investors and the public interest in accordance with Section 6(b)(5) of the Act.

As noted above, as originally approved, the CBOE determined to restrict the trading of FLEX Equity Options to those options which were traded on the Exchange as Non-FLEX Equity Options. The CBOE rationale for this restriction was reasonable and the Commission therefore approved the restriction as consistent with the Act. The Commission believes, however, that the restriction is not mandated by the Act and that it is reasonable for the CBOE to conform its rules to those proposed by other competing markets seeking to establish FLEX Equity Options must still meet the eligibility requirements and criteria set forth in CBOE Rule 5.3. The change should also promote fair competition among exchange markets trading FLEX Equity Options by allowing CBOE to trade and compete for FLEX Equity Options order flow on more options eligible securities.

The Commission finds good cause for approving this proposed rule change prior to the thirtieth day after the date of publication of notice thereof in the Federal Register. Specifically, the Commission believes that the CBOE proposal to conform its rules concerning the selection of underlying securities for FLEX Equity Option trading to the proposed rules of other exchanges on the same subject raises no new regulatory issues. Additionally, the Amex and Phlx proposals were subject to a full notice and comment period, and no comments were received. Accordingly, the Commission believes, consistent with Section 6(b)(5) of the Act, that good cause exists, to approve the proposed rule change on an accelerated basis.

IV. Solicitation of Comments

Interested persons are invited to submit written data, views and arguments concerning the foregoing. Persons making written submissions should file six copies thereof with the Secretary, Securities and Exchange Commission, 450 Fifth Street, N.W., Washington, D.C. 20549. Copies of the submission, all subsequent amendments, all written statements with respect to the proposed rule change that are filed with the Commission, and all written communications relating to the proposed rule change between the Commission and any person, other than

[1] *See* Securities Exchange Act Release Nos. 37053 (March 29, 1996), 61 FR 15537 (April 8, 1996) (File No. SR-Amex-95–57) and 37048 (March 29, 1996), 61 FR 15549 (File No. SR-Phlx-96–08). *See also* Letter from Michael Pierson, Senior Attorney, Market Regulation, Pacific Stock Exchange (''PSE''), to John Ayanian, Attorney, Office of Market Supervision (''OMS''), Division of Market Regulation (''Market Regulation''), Commission dated April 26, 1996 (proposing the same amendment to File No. SR–PSE–96–11).

those that may be withheld from the public in accordance with the provisions of 5 U.S.C. 552, will be available for inspection and copying in the Commission's Public Reference Section, 450 Fifth Street, N.W., Washington, D.C. 20549. Copies of such filing will also be available for inspection and copying at the principal office of CBOE. All submissions should refer to File No. SR–CBOE–96–28 and should be submitted by July 18, 1996.

It is therefore ordered pursuant to Section 19(b)(2) of the Act, that the proposed rule change is approved on an accelerated basis.

For the Commission, by the Division of Market Regulation, pursuant to delegated authority.[2]

Margaret H. McFarland,

Deputy Secretary.

[FR Doc. 96–16369 Filed 6–26–96; 8:45 am]

BILLING CODE 8010–01–M

[2] 17 CFR 200.30–3(a)(12).

[Release No. 34–37343; File No. SR–GSCC–96–02]

Self-Regulatory Organizations; Government Securities Clearing Corporation; Order Approving Proposed Rule Change Modifying the Minimum Financial Criteria for Category One Interdealer Broker Netting Membership

June 20, 1996.

On February 13, 1996, the Government Securities Clearing Corporation (''GSCC'') filed with the Securities and Exchange Commission (''Commission'') a proposed rule change (File No. SR–GSCC–96–02) pursuant to Section 19(b)(1) of the Securities Exchange Act of 1934 (''Act'').[1] Notice of the proposal was published in the Federal Register on March 14, 1996.[2] GSCC amended the filing on May 16, 1996.[3] No comment letters were received regarding the proposed rule change. For the reasons discussed below, the Commission is approving the proposed rule change.

[1] 15 U.S.C. § 78s(b)(1) (1988).

[2] Securities Exchange Act Release No. 36945 (March 7, 1996), 61 FR 10614.

[3] GSCC amended the filing to request that the proposed rule change become effective upon approval by the Commission and not with the implementation of the second stage of netting services for repurchase and reverse repurchase transactions involving government securities as the underlying instrument (''repos'') as originally requested. Letter from Jeffrey F. Ingber, General Counsel and Secretary, GSCC, to Jerry W. Carpenter, Assistant Director, Division of Market Regulation, Commission (May 16, 1996).

I. Description

GSCC is modifying its rules to reflect a new minimum financial criteria for category one interdealer broker (''IDB'') membership in GSCC's netting system. Such financial criteria will be based on levels of (1) excess net capital if the member is a broker-dealer registered with the Commission pursuant to Section 15 of the Act[4] or (2) excess liquid capital if the member is a government securities broker registered pursuant to Section 15C of the Act.[5] Excess net capital is defined in GSCC's rules as the difference between the net capital of a broker or dealer and the minimum net capital such broker or dealer must have to comply with the requirements of Rule 15c3–1(a) under the Act.[6] Excess liquid capital is defined in GSCC's rules as the difference between the liquid capital of a government securities broker or dealer and the minimum liquid capital that such broker or dealer must have to comply with the requirements of 17 CFR 402.2 (a), (b), and (c).

Currently, GSCC has two categories of netting system membership for IDBs. Category one IDBs act exclusively as brokers and trade only with netting members and with certain ''grandfathered'' nonmember firms.[7] Currently, the minimum financial requirement for category one IDBs is $4.2 million in excess net or liquid capital, as applicable. Category two IDBs have a minimum financial requirement of $25 million in net worth and $10 million in excess net or liquid capital, as applicable.[8]

GSCC's proposed rule change will modify the minimum financial requirement for category one IDBs to require $10 million in excess net or liquid capital, as applicable. Category one IDBs will continue not to have a minimum net worth requirement.

III. Discussion

The Commission finds that the proposed rule change is consistent with the Act, and specifically with Sections 17A(b)(4)(B)[9] and 17A(b)(3)(F).[10] Section 17A(b)(4)(B) provides that a registered clearing agency may deny participation to or condition the participation of any person if such person does not meet such standards of financial responsibility as are prescribed by the rules of the clearing agency. Section 17A(b)(3)(F) requires the rules of a clearing agency be designed to assure the safeguarding of securities and funds which are in the custody or control of the clearing agency or for which it is responsible. GSCC believes that given the large dollar volume of activity that the IDBs have submitted and continue to submit to GSCC for netting and settlement and their principal nature vis-a-vis GSCC, it is appropriate to require as a condition to participation that all IDBs have and maintain a minimum level of excess net or liquid capital of at least $10 million. The Commission believes that modifying the minimum financial criteria for category one IDBs should strengthen GSCC's overall risk management process and enhance its membership standards. The Commission believes that the increased capital requirement for category one IDBs should provide for greater financial responsibility, operational capacity, experience, and competence. The Commission also believes that by enhancing its risk management process the increase will facilitate GSCC in fulfilling its statutory obligations under Section 17A of the Act with respect to the safekeeping of securities or funds in its custody or control or for which it is responsible.

IV. Conclusion

On the basis of the foregoing, the Commission finds that the proposal is consistent with the requirements of the Act and in particular with Section 17A of the Act.

It is therefore ordered, pursuant to Section 19(b)(2) of the Act, that the proposed rule change (File No. SR–GSCC–96–02) be and hereby is approved.

For the Commission by the Division of Market Regulation, pursuant to delegated authority.[11]

Margaret H. McFarland,

Deputy Secretary.

[FR Doc. 96–16450 Filed 6–26–96; 8:45 am]

BILLING CODE 8010–01–M

[4] 15 U.S.C. § 78o (1988).

[5] 15 U.S.C. § 78o–5 (1988).

[6] 17 CFR 15c3–1(a) (1975).

[7] GSCC maintains a list of grandfathered entities which are non-netting system members that historically have done business with GSCC's interdealer broker netting members. Business done by the interdealer broker netting members with grandfathered entities is treated by GSCC as business done with an actual netting member.

[8] Unlike a category one IDB, a category two IDB is permitted to have up to ten percent of its business with non-netting members other than grandfathered, nonmember firms. This determination is based on the category two IDB's dollar volume of next-day and forward settling activity in eligible securities over the prior twenty business days.

[9] 15 U.S.C. 78q–1(b)(4)(B) (1988).

[10] 15 U.S.C. § 78q–1(b)(3)(F) (1988).

[11] 17 CFR 200.30–3(a)(12) (1995).

[Release No. 34–37347; File No. SR–NSCC–96–08]

Self-Regulatory Organizations: National Securities Clearing Corporation; Notice of Filing of Proposed Rule Change Modifying Rules and Procedures Relating to the New York Window System

June 21, 1996.

Pursuant to Section 19(b)(1) of the Securities Exchange Act of 1934 (''Act''),[1] notice is hereby given that on April 3, 1996, the National Securities Clearing Corporation (''NSCC'') filed with the Securities and Exchange Commission (''Commission'') the proposed rule change as described in Items I, II, and III below, which items have been prepared primarily by NSCC. The Commission is publishing this notice to solicit comments on the proposed rule change from interested persons.

I. Self-Regulatory Organization's Statement of the Terms of Substance of the Proposed Rule Change

The purpose of the proposed rule change is to modify NSCC's rules regarding the New York Window (''NYW'') service to (i) allow members to use the NYW through their individual systems, (ii) modify the terms and conditions which NYW services are provided with respect to the use of the NYW through NSCC's proprietary system, and (ii) clarify that members may elect to use all or some of the services offered under the NYW service.[2]

II. Self-Regulatory Organization's Statement of the Purpose of, and Statutory Basis for, the Proposed Rule Change

In its filing with the Commission, NSCC included statements concerning the purpose of and basis for the proposed rule change and discussed any comments it received on the proposed rule change. The text of these statements may be examined at the places specified in Item IV below. NSCC has prepared summaries, set forth in sections A, B, and C below, of the most significant aspects of such statements.[3]

A. Self-Regulatory Organization's Statement of the Purpose of, and Statutory Basis for, the Proposed Rule Change

NSCC's NYW service provides for the processing of receives and deliveries of physical securities and for related services. The NYW service also provides custodial services and custodial related services. When NSCC sought permanent approval of the NYW service, it anticipated that members accessing the NYW through their own systems eventually would migrate to using NSCC's proprietary system. However, because of the number of industry initiatives currently underway and the resulting demand on members' technological resources, a number of participants continue to access the NYW through their own systems. This proposed rule change seeks to clarify NSCC's NYW rules to explicitly allow members to take advantage of the NYW through the use of their individual systems.

Presently, reimbursement for losses related to the use of the NYW service is within the sole discretion of NSCC. In order to encourage members to use NSCC's proprietary system for the NYW service, NSCC will accept responsibility for certain categories of losses where members use NSCC's proprietary system. Under the proposed rule change, NSCC will be responsible for: (1) the replacement cost of certificates lost while in the care, custody, or control of NSCC employees or agents, (2) with respect to a lost security, the cost to carry the lost security from the date of the scheduled delivery or the redemption date until the date when replacement securities are delivered or presented,[4] and (3) the cost to carry for the number of days the NSCC is unable to complete a delivery-verse-payment instruction if such failure is due to circumstances other than those set forth in clause (1) above. However, with respect to the NSCC's obligations under clauses (2) and (3) above, NSCC will have no obligations unless (a) instructions regarding delivery and the subject securities are delivered to NSCC within time parameters established by NSCC from time to time, (b) the final delivery destination is within the New York City downtown financial district, and (c) other operational criteria, as established by NSCC from time to time, are met. Notwithstanding clauses (1), (2), and (3) above, NSCC will not be liable for (a) special, incidental, or consequential damages or any direct or indirect damages other than the cost to carry or (b) the cost to carry resulting from any failure or delay arising out of conditions beyond its reasonable control including, but not limited to, work stoppages, fire, civil disobedience, riots, rebellions, storms, electrical failures, acts of God, and similar occurrences. These revised terms will be offered to current users of NSCC's NYW services as well as prospective NYW service users that access the NYW service through NSCC's proprietary system. NSCC is adding a section to Addendum K, Interpretation of the Board of Directors, Application of Clearing Fund to Excess Losses and Losses Outside of a System, which will provide that if NSCC were to have an unsatisfied loss due to a member's use of the NYW service, the loss may be satisfied from the entire clearing fund.

The proposed rule change also clarifies that members may choose to use only some of the NYW services (*e.g.*, custodial and custodial related services). Members may enter into agreement(s) limiting their access to specified NYW services which they desire to access.

NSCC believes that the proposed rule changes will provide greater access to the services provided by NYW. NSCC also believes that the proposed rule change relates to its capacity to safeguard securities and funds in its custody or control and to protect the public interest and is therefore consistent with the requirements of Section 17A[5] of the Act and the rules and regulations thereunder applicable to NSCC.

B. Self-Regulatory Organization's Statement on Burden on Competition

NSCC does not believe the proposed rule change will have an impact on or impose a burden on competition.

C. Self-Regulatory Organization's Statement on Comments on the Proposed Rule Change Received From Members, Participants, or Others

No written comments relating to the proposed rule change have been solicited or received. NSCC will notify the Commission of any written comments received by NSCC.

III. Date of Effectiveness of the Proposed Rule Change and Timing for Commission Action

Within thirty-five days of the date of publication of this notice in the Federal Register or within such longer period (i) as the Commission may designate up to ninety days of such date if it finds such

[1] 15 U.S.C. § 78s(b)(1) (1988).

[2] For a complete description of NYW services, refer to Securities Exchange Act Release No. 34629 (September 1, 1994), 59 FR 46680 [File No. SR–NSCC–94–12] (order granting permanent approval of the NYW service).

[3] The Commission has modified the text of the summaries prepared by NSCC.

[4] The cost to carry a security represents the interest costs associated with a participant's failure to receive timely payment.

[5] 15 U.S.C. § 78q–1 (1988).

longer period to be appropriate and publishes its reasons for so finding or (ii) as to which the self-regulatory organization consents, the Commission will:

(A) By order approve such proposed rule change or

(B) Institute proceedings to determine whether the proposed rule change should be disapproved.

IV. Solicitation of Comments

Interested persons are invited to submit written data, views, and arguments concerning the foregoing. Persons making written submissions should file six copies thereof with the Secretary, Securities and Exchange Commission, 450 Fifth Street N.W., Washington, D.C. 20549. Copies of the submission, all subsequent amendments, all written statements with respect to the proposed rule change that are filed with the Commission, and all written communications relating to the proposed rule change between the Commission and any person, other than those that may be withheld from the public in accordance with the provisions of 5 U.S.C. § 552, will be available for inspection and copying in the Commission's Public Reference Room, 450 Fifth Street N.W., Washington, D.C. 20549. Copies of such filing will also be available for inspection and copying at the principal office of NSCC. All submissions should refer to File No. SR–NSCC–96–08 and should be submitted by July 18, 1996.

For the Commission by the Division of Market Regulation, pursuant to delegated authority.[6]

Margaret H. McFarland,

Deputy Secretary.

[FR Doc. 96–16451 Filed 6–26–96; 8:45 am]

BILLING CODE 8010–01–M

[6] 17 CFR 200.30–3(a)(12) (1995).

[Release No. 34–37339; File No. SR–PSE–96–11]

Self-Regulatory Organizations; Order Approving Proposed Rule Change and Notice of Filing and Order Granting Accelerated Approval of Amendment Nos. 1, 2, and 3 to the Proposed Rule Change by the Pacific Stock Exchange, Incorporated, Relating to FLEX Equity Options

June 19, 1996.

I. Introduction

On April 5, 1996, the Pacific Stock Exchange Incorporated (''PSE'' or ''Exchange'') filed a proposed rule change with the Securities and Exchange Commission (''SEC'' or ''Commission''), pursuant to Section 19(b)(1) of the Securities Exchange Act of 1934 (''Act'')[1] and Rule 19b–4 thereunder,[2] to make certain revisions to Exchange rules relating to FLEX Equity Options.

Notice of the proposal was published for comment and appeared in the Federal Register on April 26, 1996.[3] The Exchange filed Amendment Nos. 1,[4] 2,[5] and 3[6] to the proposal on April 27, 1996, May 20, 1996, and May 28, 1996, respectively. No comment letters were received on the proposed rule change. This order approves the Exchange's proposal, as amended.

II. Description of the Proposal

On February 14, 1996, the Commission approved an Exchange proposal to list and trade FLEX Equity Options.[7] FLEX Equity Options permit market participants to designate certain contract terms for options of such securities, including: exercise price; exercise style (i.e., American, European or capped); expiration date; and option type (i.e., put, call or spread).

PSE Rule 8.109(a) currently provides for the selection of ''FLEX Qualified Market Makers,'' i.e., market makers whom the Exchange deems to be qualified to trade FLEX Equity Options based on the following factors: (1) the preference of the registrants; (2) the maintenance and enhancement of competition among market makers; and (3) the assurance that the market maker will have adequate financial resources.[8] In addition, pursuant to Rule 8.115(a), FLEX Qualified Market Makers may not effect any transactions in FLEX Equity Options unless one or more letter(s) of guarantee has been issued by a clearing member and filed with the Exchange pursuant to Rule 6.36(a). In connection with these letters of guarantee, a clearing member must accept financial responsibility for all FLEX transactions made by such market makers.

PSE Rule 8.109(a) currently provides that the Exchange shall appoint five or more FLEX Qualified Market Makers to each FLEX Equity Option prior to its listing.[9] The Exchange proposes to reduce the minimum number of FLEX Qualified Market Makers required under Rule 8.109(a) from five to three. The Exchange is proposing this change in order to enhance its ability to trade FLEX Equity Options on the Exchange. The Exchange believes that no undue financial risk to the Exchange would result from this change because each transaction of FLEX Qualified Market Makers will be backed by a clearing member, which will accept financial responsibility for all FLEX transactions made by such market makers pursuant to a letter of guarantee.[10] The Exchange also believes that three FLEX Qualified Market Makers will be a sufficient number of traders to provide quotations in response to requests for quotes because the Exchange expects the FLEX Equity Options will be traded in the same trading crowd as Non-FLEX Options on the same underlying securities. In this regard, the Exchange notes that under the current rules, two FLEX Appointed Market Makers may be designated in lieu of five FLEX Qualified Market Makers to trade FLEX Equity Options.[11]

[1] 15 U.S.C. 78s(b)(1).

[2] 17 CFR 240.19b–4.

[3] *See* Securities Exchange Act Release No. 37133 (April 19, 1996), 61 FR 18636.

[4] In Amendment No. 1, the Exchange proposes to: (1) permit FLEX Equity Options trading on any options-eligible security, regardless of whether Non-FLEX Equity Options overlie that security and trade on the Exchange; and (2) provide for a guaranteed minimum right of participation of at least 25% of the trade for Submitting Members indicating an intent to cross and responding to the Request for Quotes with a price better than the BBO. *See* Letter from Michael Pierson, Senior Attorney, Market Regulation, PSE, to John Ayanian, Attorney, Office of Market Supervision (''OMS''), Division of Market Regulation (''Market Regulation''), Commission, dated April 26, 1996 (''Amendment No. 1'').

[5] In Amendment No. 2, the Exchange makes several non-substantive corrections to PSE Rule 8.103(e)(3), as described more fully herein. *See* Letter from Michael Pierson, Senior Attorney, Market Regulation, PSE, to John Ayanian, Attorney, OMS, Market Regulation, Commission, dated May 17, 1996 (''Amendment No. 2'').

[6] In Amendment No. 3, the Exchange proposes to amend PSE Rule 8.101(a) to allow FLEX transactions during normal Exchange options trading hours on any business day; provided however, that the Board of Governors, in its discretion at any time, may determine to narrow or otherwise restrict the time set for FLEX options trading. *See* Letter from Michael Pierson, Senior Attorney, Market Regulation, PSE, to John Ayanian, Attorney, OMS, Market Regulation, Commission, dated May 23, 1996 (''Amendment No. 3'').

[7] *See* Securities Exchange Act Release No. 36841 (February 14, 1996), 61 FR 6666 (February 21, 1996).

[8] By contrast, under Rules 8.100 *et seq.*, ''FLEX Appointed Market Makers'' are those individuals who have been designated by the Exchange to trade FLEX options on a specific underlying index (''FLEX Index Option'') that has been approved by the Commission for FLEX Options trading. *See* PSE Rules 8.100(a)(1) and 8.109(a).

[9] With respect to FLEX Index Options, two FLEX Appointed Market Makers must be approved to trade FLEX Options on a given index before the Exchange may list FLEX Options on that index. FLEX Appointed Market Makers must also meet the capital requirements of Rule 8.114 (i.e., they must maintain $1 million net liquidating equity and/or $1 million net capital (as defined by SEC Rule 15c3–1 under the Act)), and they must also meet the account equity requirements of Rule 8.113(a) (i.e., the net liquidating equity maintained in their individual or joint accounts must be at least $100,000).

[10] *See* PSE Rule 8.115(a).

[11] *See* PSE Rule 8.109(a).

Under PSE Rule 8.102(f)(1), only those qualified and approved underlying securities that are the subject of Non-FLEX Equity Option trading on the Exchange may serve as underlying securities of FLEX Equity Options traded on the Exchange. In this respect, Rule 8.102(f)(1) differs from the rules proposed by the American Stock Exchange (''Amex'') and the Philadelphia Stock Exchange (''Phlx'') in respect of FLEX Equity Option trading on those exchanges.[12] Proposed Amex Rule 903G(c) and proposed Phlx Rule 1069A(a)(1)(B) are substantively identical in that any options-eligible security, regardless of whether the security is the subject of Non-FLEX Equity Options traded on the exchange, may underlie a FLEX Equity Option. The Exchange proposes to amend PSE Rule 8.102(f)(1) to conform to similar rules proposed by the exchanges mentioned above, to permit FLEX Equity Options trading on any options-eligible security regardless of whether Non-FLEX Equity Options overlie that security and trade on the Exchange.[13]

Additionally, the Exchange proposes to amend PSE Rule 8.103(e)(3) in order to provide a minimum right of participation to Exchange members who initiate Requests for Quotes (''RFQ'') in respect of FLEX Equity Options and indicate an intention to cross or act as principal on the trade.[14] The proposed rule change will provide that a member who submits a Request for Quotes in respect of a FLEX Equity Option and indicates an intention to cross or act as principal on the trade, and who *improves* the BBO during the BBO Improvement Interval, has a priority right to execute the contra side of the trade for at least twenty-five percent (25%) of the trade.[15]

Finally, the Exchange proposes to amend PSE Rule 8.101(a) to allow FLEX transaction during normal Exchange options trading hours on any business day; provided however, that the Board of Governors, in its discretion at any time, may determine to narrow or otherwise restrict the time set for FLEX options trading. The Exchange believes that this proposed rule change is consistent with the other options exchanges FLEX Options rules.[16]

The Exchange believes that the proposed rule change is consistent with Section 6(b) of the Act in general and furthers the objectives of Section 6(b)(5) in particular in that it is designed to prevent fraudulent and manipulative acts and practices, to promote just and equitable principles of trade, to foster cooperation and coordination with persons engaged in facilitating transactions in securities, and to remove impediments to and perfect the mechanism of a free and open market and a national market system.

III. Discussion

The Commission finds that the proposed rule change is consistent with the requirements of the Act and the rules and regulations thereunder applicable to a national securities exchange. Moreover, the Commission believes that the proposed rule change is reasonable in that it promotes fair competition among exchanges, and will serve to protect investors and the public interest in accordance with Sections 6(b)(5) and 11A of the Act.

The Commission believes that the Exchange's proposal to reduce the minimum number of FLEX Qualified Market Makers required under Rule 8.109(a) from five to three is consistent with the Act. The Commission notes that the Exchange's rules currently provide a framework that encourages FLEX Qualified Market-Makers, specifically guaranteed by a clearing member,[17] to actively make responsive quotes to provide liquidity in FLEX Equity Options. A FLEX Post Official may call upon a FLEX Qualified Market-Maker to make responsive quotes in the interests of a fair and orderly market.[18] Moreover, a FLEX Post Official must call upon a FLEX Qualified Market-Maker to make a quote in response to a Request for Quotes if no quotes are made in response to the RFQ. Based on these requirements, the Commission agrees with the PSE that a minimum of three FLEX Qualified Market-Makers should be sufficient to provide quotations in response to a request for quotes and generally accommodate FLEX Equity Options trading.

The Commission also believes that the proposed minimum guaranteed right of participation of at least 25% of the trade to Exchange members who initiate Requests for Quotes in respect of FLEX Equity Options, (improves the BBO), and indicate an intention to cross or act as principal on the trade, is consistent with Act. In addition, under PSE rules, such transactions must, in all cases, be in compliance with the priority, parity, and precedence requirements of Section 11(a) of the Act,[19] and Rule 11a1–1(T)[20] promulgated thereunder. These provisions set forth, among other things, the conditions in which members must yield priority to public customers' bids and offers at the same price.

The Commission believes that the Exchange's proposal to permit FLEX Equity Options trading on any options-eligible security regardless of whether Non-FLEX Equity Options overlie that security and trade on the Exchange is reasonable, in that it promotes fair competition among exchanges, consistent with Section 11A of the Act, and will perfect the mechanism of a free and open market and serve to protect investors and the public interest in accordance with Section 6(b)(5) of the Act.

As originally approved, the PSE determined to restrict the trading of FLEX Equity Options to those options which were traded on the Exchange as Non-FLEX Equity Options. The PSE rationale for this restriction was reasonable and the Commission therefore approved the restriction as consistent with the Act. The Commission believes, however, that the restriction is not mandated by the Act and that it is reasonable for the PSE to conform its rules to those proposed by other competing markets seeking to establish FLEX Equity Options trading. The Commission notes that PSE FLEX Equity Options must still meet the eligibility requirements and criteria set forth in PSE Rule 3.6. The change should also promote fair competition among exchange markets trading FLEX Equity Options by allowing PSE to trade and compete for FLEX Equity Options order flow on more options eligible securities.

Finally, the Commission believes it is consistent with Section 6(b)(5) of the Act for the PSE to establish the same trading hours for FLEX Options that currently exist for PSE's normal options trading hours. The Commission also believes that because of the nature of the FLEX market, in contrast to the Non-FLEX market, it is reasonable to permit the Board, in its discretion, to narrow or restrict trading hours for FLEX Options, so long as such trading hours occur within the normal options trading hours of the Exchange.

The Commission finds good cause for approving Amendment No. 1 to the proposed rule change prior to the

[12] *See* Securities Exchange Act Release Nos. 37053 (March 29, 1996), 61 FR 15537 (April 8, 1996) (File No. SR–Amex–95–57), and 37048 (March 29, 1996), 61 FR 15549 (File No. SR–Phlx–96–08). *See also* File No. SR–CBOE–96–28 (proposing the same amendment).

[13] *See* Amendment No. 1, *supra* note 4.

[14] *See* Amendment No. 1, *supra* note 4; *see also* Amendment No. 2, *supra* note 5.

[15] *See* Amendment No. 1, *supra* note 4.

[16] *See* Amendment No. 3, *supra* note 6.

[17] The Commission notes that FLEX Qualified Market Makers are still required under Exchange rules to obtain a specific Letter of Guarantee from a clearing member.

[18] *See* PSE Rule 8.109(b).

[19] 15 U.S.C. 78k(a).

[20] 17 CFR 240.11a1–1(T).

thirtieth day after the date of publication of notice thereof in the Federal Register. Specifically, Amendment No. 1 proposes a minimum guaranteed right of participation of at least 25% of the trade to Exchange members who initiate Request for Quotes in respect of FLEX Equity Options, as described above. The Commission believes that the amendment is similar to existing provisions in the Exchange rules regarding FLEX Index Options and raises no new regulatory issues.

Furthermore, Amendment No. 1 proposes to conform the PSE's rules concerning the selection of underlying securities for FLEX Equity Option trading, as described above, to the proposed rules of other exchanges on the same subject, and raises no new regulatory issues. Additionally, the Amex and Phlx proposals were subject to a full notice and comment period, and no comments were received. Accordingly, the Commission believes, consistent with Section 6(b)(5) of the Act, that good cause exists, to approve Amendment No. 1 to the proposed rule change, on an accelerated basis.

The Commission finds good cause for approving Amendment No. 2 to the proposed rule change prior to the thirtieth day after the date of publication of notice thereof in the Federal Register. Specifically, Amendment No. 2 proposes certain non-substantive amendments to PSE Rule 8.103(e)(3) to clearly distinguish which particular guaranteed minimum right of participation is available to a FLEX Equity Option and which is available to FLEX Index Option. The Commission believes that Amendment No. 2 is a non-substantive amendment and raises no new regulatory issues. Moreover, the Commission believes that the amendment clarifies and strengthens the proposed rule change and the Exchange's FLEX Option rules, generally.

Accordingly, the Commission believes, consistent with Section 6(b)(5) of the Act, that good cause exists, to approve Amendment No. 2 to the proposed rule change, on an accelerated basis.

The Commission finds good cause for approving Amendment No. 3 to the proposed rule change prior to the thirtieth day after the date of publication of notice thereof in the Federal Register. Specifically, the Exchange proposes to amend PSE Rule 8.101(a) to allow FLEX transactions during normal Exchange options trading hours on any business day; provided however, that the Board of Governors, in its discretion at any time, may, with normal trading hours, determine to narrow or otherwise restrict the time set for FLEX options trading. The Commission believes that the Exchange's proposal to allow FLEX transactions during normal Exchange options trading hours on any business day, as described above, is similar to that provided under other options exchanges' rules regarding FLEX trading hours and raises no new regulatory issues.

Accordingly, the Commission believes, consistent with Section 6(b)(5) of the Act, that good cause exists, to approve Amendment No. 3 to the proposed rule change, on an accelerated basis.

IV. Solicitation of Comments

Interested persons are invited to submit written data, views and arguments concerning Amendment Nos. 1, 2, and 3 to the proposed rule change. Persons making written submissions should file six copies thereof with the Secretary, Securities and Exchange Commission, 450 Fifth Street, N.W., Washington, D.C. 20549. Copies of the submission, all subsequent amendments, all written statements with respect to the proposed rule change that are filed with the Commission, and all written communications relating to the proposed rule change between the Commission and any person, other than those that may be withheld from the public in accordance with the provisions of 5 U.S.C. 552, will be available for inspection and copying in the Commission's Public Reference Section, 450 Fifth Street, N.W., Washington, D.C. 20549. Copies of such filing will also be available for inspection and copying at the principal office of PSE. All submissions should refer to File No. SR–PSE–96–11 and should be submitted by July 18, 1996.

It is therefore ordered, pursuant to Section 19(b)(2) of the Act,[21] that the proposed rule change (File No. SR–PSE–96–11), as amended, is approved.

For the Commission, by the Division of Market Regulation, pursuant to delegated authority.[22]

Margaret H. McFarland,

Deputy Secretary.

[FR Doc. 96–16366 Filed 6–26–96; 8:45 am]

BILLING CODE 8010–01–M

[21] 15 U.S.C. 78s(b)(2).

[22] 17 CFR 200.30–3(a)(12).

[Release No. 34–37335; File No. SR–PSE–96–09]

Self-Regulatory Organizations; Notice of Filing of Proposed Rule Change by the Pacific Stock Exchange Incorporated Relating to the Options Book Pilot Program

June 19, 1996.

Pursuant to Section 19(b)(1) of the Securities Exchange Act of 1934 (''Act''),[1] notice is hereby given that on April 1, 1996, the Pacific Stock Exchange Incorporated (''PSE'' or ''Exchange'') filed with the Securities and Exchange Commission (''Commission'') the proposed rule change as described in Items I, II, and III below, which Items have been prepared by the self-regulatory organization. The Exchange filed Amendment No. 1 to the proposed rule change on June 4, 1996.[2] The Commission is publishing this notice to solicit comments on the proposed rule change from interested persons.

I. Self-Regulatory Organization's Statement of the Terms of Substance of the Proposed Rule Change

The PSE proposes to establish a pilot program under which its Lead Market Makers (''LMMs'') would be able to assume operational responsibility for the options public limit order book (''Book'') in certain issues.

II. Self-Regulatory Organization's Statement of the Purpose of, and Statutory Basis for, the Proposed Rule Change

In its filing with the Commission, the self-regulatory organization included statements concerning the purpose of and basis for the proposed rule change and discussed any comments it received on the proposed rule change. The text of these statements may be examined at the places specified in Item IV below. The self-regulatory organization has prepared summaries, set forth in Sections (A), (B), and (C) below, of the most significant aspects of such statements.

[1] 15 U.S.C. 78s(b)(1) (1988).

[2] Amendment No. 1 adds a provision to proposed PSE Rule 6.82, Commentary .05 stating that no Market Maker Cooperatives may participate as LMMs in the pilot program. Amendment No. 1 also replaces a PSE Rule 6.82, Commentary .05 reference to ''April __, 1997'' as the proposed expiration date for the pilot program, with a reference to ''[Date]''. Letter from Michael D. Pierson, Senior Attorney, Market Regulation, PSE, to Michael Walinskas, Special Counsel, Office of Market Supervision (''OMS''), Division of Market Regulation (''Division''), Commission, dated June 4, 1996 (''Amendment No. 1'').

(A) Self-Regulatory Organization's Statement of the Purpose of, and Statutory Basis for, the Proposed Rule Change

The Exchange proposes to amend its rules governing LMMs to allow some LMMs to manage the Book function in certain designated issues. The program would be implemented on a limited basis, involving no more than three LMMs and no more than forty option symbols in total,[3] during a one-year pilot phase. No Market Maker Cooperatives would be permitted to participate in the pilot.[4] The Exchange would evaluate the program, and, six months prior to its expiration, would determine whether to modify it and whether to seek permanent approval from the Commission. Under the pilot, the designated LMMs would manage the Book function, take responsibility for trading disputes and errors, set rates for Book execution, and pay the Exchange a fee for systems and services.

The LMMs who participate during the pilot phase would be selected by the Options Floor Trading Committee based on some or all of the following factors: experience with trading an option issue as a Market Maker or LMM and willingness to assume LMM responsibilities; trading volume of the issue(s); adequacy of capital; willingness to promote the Exchange as a marketplace; history of adherence to Exchange rules and securities laws; trading crowd/LMM evaluations conducted pursuant to Options Floor Procedure Advice B–13; and ability to manage the Book operation. Only dually or multiply traded option issues would be eligible during the pilot phase.

The Exchange proposes to amend its Rule 6.82 to provide that, subject to the approval of the Exchange, LMMs would be eligible to perform all functions of the Order Book Official (''OBO'') in designated option issues pursuant to Rules 6.51 through 6.59. In that regard, the Exchange would allow the LMM to use Exchange personnel to assist the LMM in performing the OBO function, and the Exchange would charge the LMM a reasonable fee for such use of Exchange personnel. If the program is made permanent, LMMs would be responsible for hiring and maintaining their own employees, but the Exchange would provide employees to assist LMMs when necessary due to market conditions. In all cases, however, employees working in the Book operation would be subject to all policies and procedures established by the Exchange. In addition, the LMM would resolve trading disputes, subject to the review of two Floor Officials upon the request of any party to such dispute. The LMM also would be required to disclose Book information to Members upon request, pursuant to PSE Rule 6.57.

With regard to their duties as market makers, LMMs would be required to perform all obligations provided in Rules 6.35 through 6.40 and 6.82. In addition, in executing transactions for their own ''Market Maker'' accounts, LMMs would have a right to participate pro rata with the trading crowd in trades that take place at the LMM's principal bid or offer.

The proposal further provides that if the Options Allocation Committee decides to reallocate an issue to the market maker system pursuant to PSE Rule 6.82(f)(2), the terminated LMM may receive a proportionate share of the net Book revenues, not to exceed one-half, for any period specified by the Options Appointment Committee up to a maximum of five years. Such award would take into account various factors, including: the length of the time of LMM service; the LMM's capital commitment; efforts expended as LMM; activity level of the issue when the LMM assumed responsibility for the Book function; and other relevant factors. The Exchange intends to develop a procedure for determining ''net Book revenues'' and specific guidelines for the Options Appointment Committee to follow in determining the amount of net Book revenues, if any, to be awarded.

Finally, the proposal specifies that LMMs who perform the function of an Order Book Official pursuant to PSE Rule 6.82(h) shall maintain ''minimum net capital,'' as provided in Rule 15c3–1 under the Act,[5] and also shall maintain a cash or liquid asset position of at least $500,000, plus $25,000 for each issue over five issues for which they perform the function of an OBO.

The Exchange believes that the proposal is consistent with Section 6(b) of the Act, in general, and Section 6(b)(5), in particular, in that it is designed to facilitate transactions in securities, to promote just and equitable principles of trade, and to protect investors and the public interest.

(B) Self-Regulatory Organization's Statement on Burden on Competition

The Exchange does not believe that the proposed rule change will impose any burden on competition that is not necessary or appropriate in furtherance of the purposes of the Act.

(C) Self-Regulatory Organization's Statement on Comments on the Proposed Rule Change Received From Members, Participants, or Others

Written comments on the proposed rule change were neither solicited nor received.

III. Date of Effectiveness of the Proposed Rule Change and Timing for Commission Action

Within 35 days of the date of publication of this notice in the Federal Register or within such longer period (i) as the Commission may designate up to 90 days of such date if it finds such longer period to be appropriate and publishes its reasons for so finding or (ii) as to which the self-regulatory organization consents, the Commission will:

(a) By order approve such proposed rule change, or

(b) Institute proceedings to determine whether the proposed rule change should be disapproved.

IV. Solicitation of Comments

Interested persons are invited to submit written data, views and arguments concerning the foregoing. Persons making written submissions should file six copies thereof with the Secretary, Securities and Exchange Commission, 450 Fifth Street, NW., Washington, DC 20549. Copies of the submission, all subsequent amendments, all written statements with respect to the proposed rule change that are filed with the Commission, and all written communications relating to the proposed rule change between the Commission and any person, other than those that may be withheld from the public in accordance with the provisions of 5 U.S.C. 552, will be available for inspection and copying in the Commission's Public Reference Section, 450 Fifth Street, NW., Washington, DC. Copies of such filing will also be available for inspection and copying at the principal office of the above-mentioned self-regulatory organization. All submissions should refer to File No. SR–PSE–96–09 and should be submitted by July 8, 1996.

[3] Telephone conversation between Michael D. Pierson, Senior Attorney, PSE, and Michael Walinskas, Special Counsel, OMS, Division, Commission, on June 4, 1996.

Each option issue typically has only one symbol associated with it, unless LEAPs are traded on that issue, in which case there usually would be two additional symbols related to the issue, or unless a contract adjustment is necessary due, for example, to a merger or stock split, in which case one additional symbol usually would be added.

[4] Amendment No. 1, *supra* note 2.

[5] 17 CFR 240.15c3–1.

For the Commission, by the Division of Market Regulation, pursuant to delegated authority.[6]

Margaret H. McFarland,

Deputy Secretary.

[FR Doc. 96–16370 Filed 6–26–96; 8:45 am]

BILLING CODE 8010–01–M

SOCIAL SECURITY ADMINISTRATION

Supplementary Agreement on Social Security Between the United States and Germany; Entry Into Force

The Commissioner of Social Security gives notice that a supplementary agreement entered into force on May 1, 1996, which amends the Social Security agreement between the United States (U.S.) and Germany that has been in effect since December 1, 1979. The supplementary agreement, which was signed on March 6, 1995, was concluded pursuant to section 233 of the Social Security Act.

The supplementary agreement updates and clarifies several provisions in the original U.S.-German Social Security agreement. Its primary purpose, however, is to permit the payment of German benefits to certain ethnic German Jews who migrated to the U.S. from parts of Eastern Europe that were overrun by the Nazis. People who qualify will receive monthly Social Security benefits from Germany based on the time they spent working in their former homelands, even though they may never have worked in Germany.

Individuals who wish to obtain copies of the supplementary agreement or want general information about its provisions may write to the Social Security Administration, Office of International Policy, Post Office Box 17741, Baltimore, Maryland 21235. Individuals who wish to obtain information about the provisions affecting ethnic German Jews from Eastern Europe should contact the nearest German consulate.

Dated: June 10, 1996.

Shirley S. Chater,

Commissioner of Social Security.

[FR Doc. 96–16403 Filed 6–26–96; 8:45 am]

BILLING CODE 4190–29–P

SMALL BUSINESS ADMINISTRATION

[Declaration of Disaster Loan Area #2852]

Illinois; Declaration of Disaster Loan Area (Amendment #4)

In accordance with a notice from the Federal Emergency Management Agency dated June 14, 1996, the above-numbered Declaration is hereby amended to include Champaign County in the State of Illinois as a disaster area due to damages caused by severe storms and flooding beginning on April 28, 1996 and continuing through May 17, 1996.

In addition, applications for economic injury loans from small businesses located in the contiguous counties of Ford and McLean in the State of Illinois may be filed until the specified date at the previously designated location.

All other information remains the same, i.e., the termination date for filing applications for physical damage is July 5, 1996, and for loans for economic injury the deadline is February 6, 1997.

(Catalog of Federal Domestic Assistance Program Nos. 59002 and 59008.)

Dated: June 19, 1996.

Bernard Kulik,

Associate Administrator for Disaster Assistance.

[FR Doc. 96–16428 Filed 6–26–96; 8:45 am]

BILLING CODE 8025–01–P

Declaration of Disaster Loan Area #2859, (Amendment #1); West Virginia

In accordance with a notice from the Federal Emergency Management Agency, effective June 5, 1996, the above-numbered Declaration is hereby amended to expand the type of incident for this disaster to include damages resulting from wind driven rain and mudslides, and to expand the incident period to May 15, 1996 and continuing.

All other information remains the same, i.e., the termination date for filing applications for physical damage is July 22, 1996, and for loans for economic injury the deadline is February 24, 1997.

(Catalog of Federal Domestic Assistance Program Nos. 59002 and 59008)

Dated: June 19, 1996.

Bernard Kulik,

Associate Administrator for Disaster Assistance.

[FR Doc. 96–16422 Filed 6–26–96; 8:45 am]

BILLING CODE 8025–01–P

Revocation of License; Small Business Investment Company

Pursuant to the authority granted to the United States Small Business Administration by the Order of the United States District Court for the Northern District of Oklahoma, dated June 12, 1986, the United States Small Business Administration hereby revokes the license of Bartlesville Investment Corporation, a Oklahoma Corporation, to function as a small business investment company under the Small Business Investment Company License No. 06/10–0139 issued to Bartlesville Investment Corporation on February 28, 1964 and said license is hereby declared null and void as of February 26,1996.

United States Small Business Administration.

Dated: June 20, 1996.

Don A. Christensen,

Associate Administrator for Investment.

[FR Doc. 96–16426 Filed 6–26–96; 8:45 am]

BILLING CODE 8025–01–P

Revocation of License of Small Business Investment Company

Pursuant to the authority granted to the United States Small Business Administration by the Order of the United States District Court of New Mexico, dated March 21, 1988, the United States Small Business Administration hereby revokes the license of Fluid Capital Corporation, a New Mexico Corporation, to function as a small business investment company under the Small Business Investment Company License No. 06/06–0224 issued to Fluid Capital Corporation on November 2, 1979 and said license is hereby declared null and void as of January 16, 1996.

United States Small Business Administration.

Dated: June 20, 1996.

Don A. Christensen,

Associate Administrator for Investment.

[FR Doc. 96–16427 Filed 6–26–96; 8:45 am]

BILLING CODE 8025–01–P

Revocation of License of Specialized Small Business Investment Company

Pursuant to the authority granted to the United States Small Business Administration by the Order of the United States District Court of New Mexico, dated March 21, 1988, the United States Small Business Administration hereby revokes the license of Fluid Financial Corporation, a New Mexico Corporation, to function as a specialized small business investment company under the Small Business Investment Company License No. 06/06–5249 issued to Fluid Financial Corporation on December 10, 1982 and said license is hereby declared null and void as of January 16, 1996.

United States Small Business Administration.

[6] 17 CFR 200.30–3(a)(12).

Dated: June 20, 1996.

Don A. Christensen,

Associate Administrator for Investment.

[FR Doc. 96–16420 Filed 6–26–96; 8:45 am]

BILLING CODE 8025–01–P

Revocation of License of Small Business Investment Company

Pursuant to the authority granted to the United States Small Business Administration by the Order of the United States District Court for the Middle District of Tennessee, dated September 6, 1984, the United States Small Business Administration hereby revokes the license of Inverness Capital Corporation, a Delaware Corporation, to function as a small business investment company under the Small Business Investment Company License No. 03/02–0273 issued to Inverness Capital Corporation on October 1, 1969 and said license is hereby declared null and void as of April 5, 1995.

United States Small Business Administration.

Dated: June 20, 1996.

Don A. Christensen,

Associate Administrator for Investment.

[FR Doc. 96–16421 Filed 6–26–96; 8:45 am]

BILLING CODE 8025–01–P

Revocation of License; Small Business Investment Company

Pursuant to the authority granted to the United States Small Business Administration by the Order of the United States District Court for the Western District of Oklahoma, dated November 4, 1987, the United States Small Business Administration hereby revokes the license of Investment Capital Inc., a Oklahoma Corporation, to function as a small business investment company under the Small Business Investment Company License No. 06/10–0133 issued to Investment Capital Inc. on Novemeber 8, 1963 and said license is hereby declared null and void as of January 16, 1996.

United States Small Business Administration.

Dated: June 20, 1996.

Don A. Christensen,

Associate Administrator for Investment.

[FR Doc. 96–16425 Filed 6–26–96; 8:45 am]

BILLING CODE 8025–01–P

Revocation of License of Small Business Investment Company

Pursuant to the authority granted to the United States Small Business Administration by the Order of the United States District Court of New Mexico, dated August 14, 1985, the United States Small Business Administration hereby revokes the license of Venture Capital Corporation of New Mexico, a New Mexico Corporation, to function as a small business investment company under the Small Business Investment Company License No. 06/06–0172 issued to Venture Capital Corporation of New Mexico on July 30, 1974 and said license is hereby declared null and void as of March 4,1996.

United States Small Business Administration.

Dated: June 20, 1996.

Don A. Christensen,

Associate Administrator for Investment.

[FR Doc. 96–16424 Filed 6–26–96; 8:45 am]

BILLING CODE 8025–01–P

Revocation of License of Specialized Small Business Investment Company

Pursuant to the authority granted to the United States Small Business Administration by the Order of the United States District Court for the Southern District of New York, dated October 27, 1992, the United States Small Business Administration hereby revokes the license of Watchung Capital Corporation, a New York Corporation, to function as a specialized small business investment company under the Small Business Investment Company License No. 02/02–5371 issued to Watchung Capital Corporation on February 19, 1980 and said license is hereby declared null and void as of March 14, 1996.

United States Small Business Administration.

Dated: June 20, 1996.

Don A. Christensen,

Associate Administrator for Investment.

[FR Doc. 96–16423 Filed 6–26–96; 8:45 am]

BILLING CODE 8025–01–P

TENNESSEE VALLEY AUTHORITY

Paperwork Reduction Act of 1995, as amended by Pub. L. 104–13; Submission for OMB Review; Comment Request

AGENCY: Tennessee Valley Authority.

ACTION: Submission for OMB review; comment request.

SUMMARY: The proposed information collection described below will be submitted to the Office of Management and Budget (OMB) for review, as required by the Paperwork Reduction Act of 1995 (44 U.S.C. Chapter 35, as amended). The Tennessee Valley Authority is soliciting public comments on this proposed collection as provided by 5 CFR § 1320.8(d)(1). Requests for information, including copies of the information collection proposed and supporting documentation, should be directed to the Acting Agency Clearance Officer: Wilma H. McCauley, Tennessee Valley Authority, 1101 Market Street (CST 13B), Chattanooga, TN 37402–2801; (423) 751–2523.

Comments should be sent to OMB Office of Information and Regulatory Affairs, Attention: Desk Officer for Tennessee Valley Authority no later than July 29, 1996.

SUPPLEMENTARY INFORMATION:

Type of Request: Regular submission, proposal to extend without revision a currently approved collection of information (OMB control number 3316–0016).

Title of Information Collection: Farmer Questionnaire-Vicinity of Nuclear Power Plants.

Frequency of Use: On occasion.

Type of Affected Public: Individuals or households, and farms.

Small Business or Organizations Affected: No.

Federal Budget Functional Category Code: 271.

Estimated Number of Annual Responses: 1,200.

Estimated Total Annual Burden Hours: 600.

Estimated Average Burden Hours Per Response: .5.

Need For and Use of Information: This survey is used to locate, for monitoring purposes, rural residents, home gardens, and milk animals within a five mile radius of a nuclear power plant. The monitoring program is a mandatory requirement of the Nuclear Regulatory Commission set out in the technical specifications when the plants were licensed.

William S. Moore,

Senior Manager, Administrative Services.

[FR Doc. 96–16448 Filed 6–26–96; 8:45 am]

BILLING CODE 8120–08–P

Paperwork Reduction Act of 1995, As Amended by P.L. 104–13; Proposed Collection; Comment Request

AGENCY: Tennessee Valley Authority.

ACTION: Proposed collection; comment request.

SUMMARY: The proposed information collection described below will be submitted to the Office of Management and Budget (OMB) for review, as required by the Paperwork Reduction Act of 1995 (44 U.S.C. Chapter 35, as

amended). The Tennessee Valley Authority is soliciting public comments on this proposed collection as provided by 5 CFR § 1320.8(d)(1). Requests for information, including copies of the information collection proposed and supporting documentation, should be directed to the Acting Agency Clearance Officer: Wilma H. McCauley, Tennessee Valley Authority, 1101 Market Street (CST 13B), Chattanooga, TN 37402–2801; (423) 751–2523.

Comments should be sent to the Acting Agency Clearance Officer no later than August 26, 1996.

SUPPLEMENTARY INFORMATION:

Type of Request: Regular submission, proposal to extend with minor revisions a currently approved collection of information (OMB control number 3316–0062).

Title of Information Collection: TVA Procurement Documents, including Invitation to Bid, Request for Proposal, Request for Quotation, and other related Procurement or Sales Documents.

Frequency of Use: On occasion.

Type of Affected Public: Individuals or households, businesses or other for-profit, non-profit institutions, small businesses or organizations.

Small Businesses or Organizations Affected: Yes.

Federal Budget Functional Category Code: 999.

Estimated Number of Annual Responses: 71,500.

Estimated Total Annual Burden Hours: 68,000.

Estimated Average Burden Hours Per Response: 1.78.

Need For and Use of Information: TVA procures goods and services to fulfill its statutory obligations and sells surplus items to recover a portion of its investment costs. This activity must be conducted in compliance with a variety of applicable laws, regulations, and Executive Orders. Vendors and purchasers who voluntarily seek to contract with TVA are affected.

William S. Moore,

Senior Manager, Administrative Services.

[FR Doc. 96–16449 Filed 6–26–96; 8:45 am]

BILLING CODE 8120–08–P

DEPARTMENT OF TRANSPORTATION

Federal Aviation Administration

Announcement of Federal Aviation Administration Acquisition Management System Standard Clauses and Provisions

AGENCY: Federal Aviation Administration, DOT.

ACTION: Correction.

SUMMARY: In notice document 96–15639 beginning on page 31210 in the issue of Wednesday, June 19, 1996, make the following correction:

On page 31210 in the first column in the third paragraph, the phone number provided for further information should read (202) 267–7761.

Dated: June 20, 1996.

Gilbert B. Devey, Jr.,

Director of Acquisitions, ASU–1.

[FR Doc. 96–16413 Filed 6–26–96; 8:45 am]

BILLING CODE 4910–13–M

Intent To Prepare an Environmental Impact Statement and To Conduct Scoping for Proposed Implemenation of Air Traffic Control Noise Abatement Procedures, Including Associated Noise Compatibility Program Mitigation Measures, and Proposed Construction of a New Air Cargo and Large-Aircraft Maintenance Facility at Toledo Express Airport, Toledo, Ohio

AGENCY: Federal Aviation Administration, DOT.

ACTION: Notice of intent to prepare an Environment Impact Statement and to hold a public scoping meeting.

SUMMARY: The Federal Aviation Administration (FAA) is issuing this notice to advise the public that an Environmental Impact Statement (EIS) will be prepared and considered for proposed implementation of air traffic control noise abatement procedures, including associated noise compatibility program mitigation measures, and proposed construction of a new air cargo and large-aircraft maintenance facility at Toledo Express Airport. In order to ensure that all significant issues related to the proposed action are identified, a public scoping meeting will be held.

FOR FURTHER INFORMATION CONTACT: Ms. Annette Davis, Environmental Program Manager, Air Traffic Division, Federal Aviation Administration, 2300 East Devon Avenue, Des Plaines, Illinois 60018 (847) 294–7832.

SUPPLEMENTARY INFORMATION: The FAA is preparing an EIS for proposed changes in air traffic procedures for noise abatement, including related noise compatibility program mitigation measures, and proposed construction of aviation related industrial facilities at Toledo Express Airport. Major development items include:

1. Construction of an air cargo sortation hub building with associated on-site aircraft ramp, truck docks, and vehicle parking and circulation pavement;

2. Construction of a large-aircraft, major maintenance hangar with associated on-site aircraft ramp, maintenance support facilities, and vehicle parking and circulation pavement.

Public Scoping Meeting: To facilitate receipt of comments, two public scoping meetings will be held on Tuesday, August 6, 1996. The first meeting, for Federal, State, and local agencies, will be held between 3 p.m. and 5 p.m. in the Mess Hall of the Ohio Air National Guard Base, 2660 Eber Road, Swanton, Ohio. The second meeting, for members of the Planning Advisory Committee, representing the public at large, will be held from 6 p.m. to 8 p.m. in the same location.

Comments and suggestions are invited from Federal, State, and local agencies, and other interested parties to ensure that the full range of issues related to these proposed projects are addressed and all significant issues identified.

Comments and suggestions may be mailed to Mr. Max A. Wolfe, Project Manager, Landrum & Brown, 11279 Cornell Park Drive, Cincinnati, OH 45242, by September 6, 1996.

Issued in Des Plaines, Illinois, on June 21, 1996.

Maureen Woods,

Manager, Air Traffic Division.

[FR Doc. 96–16414 Filed 6–26–96; 8:45 am]

BILLING CODE 4910–13–M

Aviation Rulemaking Advisory Committee Meeting on Aircraft Certification Procedures Issues

AGENCY: Federal Aviation Administration (FAA), DOT.

ACTION: Notice of meeting.

SUMMARY: The FAA is issuing this notice to advise the public of a meeting of the Federal Aviation Administration's Aviation Rulemaking Advisory Committee to discuss aircraft certification procedures issues.

DATES: The meeting will be held on July 25, 1996, at 9:00 a.m. Arrange for oral presentations by July 18, 1996.

ADDRESS: The meeting will be held at the General Aviation Manufacturers Association, Suite 801, 1400 K St., NW., Washington, DC 20005.

FOR FURTHER INFORMATION CONTACT: Jeanne Trapani, Office of Rulemaking (ARM–208), 800 Independence Avenue, SW, Washington, DC 20591, telephone (202) 267–7624.

SUPPLEMENTARY INFORMATION: Pursuant to section 10(a)(2) of the Federal

Advisory Committee Act (Pub. L. 92–463; 5 U.S.C. App. II), notice is hereby given of a meeting of the Aviation Rulemaking Advisory Committee to be held on July 25, 1996, at the General Aviation Manufacturers Association, Suite 801, K St., NW., Washington, DC 20005. The agenda for the meeting will include:

- Opening Remarks
- Working Group Reports
  Delegation System
  Parts
  Production Certification
  ICPTF
- New Business

Attendance is open to the interested public, but will be limited to the space available. The public must make arrangements by July 18, 1996, to present oral statements at the meeting. The public may present written statements to the committee at any time by providing 25 copies of the Assistant Executive Director for Aircraft Certification Procedures or by bringing the copies to him at the meeting. Arrangements may be made by contacting the person listed under the heading **FOR FURTHER INFORMATION CONTACT.**

Sign and oral interpretation can be made available at the meeting, as well as an assistive listening device, if requested 10 calendar days before the meeting.

Issued in Washington, DC, on June 20, 1996.

Ava L. Robinson,

Assistant Executive Director, Aviation Rulemaking Advisory Committee on Aircraft Certification Procedures.

[FR Doc. 96–16417 Filed 6–26–96; 8:45 am]

BILLING CODE 4910–13–M

Aviation Rulemaking Advisory Committee Meeting

AGENCY: Federal Aviation Administration (FAA), DOT.

ACTION: Notice of meeting.

SUMMARY: The FAA is issuing this notice to advise the public of a meeting of the Federal Aviation Administration Aviation Rulemaking Advisory Committee to discuss air carrier/general aviation maintenance issues.

DATES: The meeting will be held on July 18 and 19, 1996, beginning at 9:30 a.m. and 8:30 a.m., respectively. Arrange for oral presentations by July 12, 1996.

ADDRESSES: The meeting will be held at the General Aviation Manufacturers Association, 1400 K Street, NW., Suite 800, Washington, DC.

FOR FURTHER INFORMATION CONTACT: Ms. Brenda Courtney, Federal Aviation Administration, Office of Rulemaking (ARM–200), 800 Independence Avenue, SW., Washington, DC 20591, telephone (202) 267–3327; facsimile number (202) 267–5075.

SUPPLEMENTARY INFORMATION: Pursuant to § 10(a)(2) of the Federal Advisory Committee Act (Pub. L. 92–463; 5 U.S.C. App. II), notice is hereby given of a meeting of the Aviation Rulemaking Advisory Committee to be held on July 18 and 19 at the General Aviation Manufacturers Association, 1400 K Street, NW., Washington, DC.

The agenda will including:

- Discussion of the working group's draft Part 66 Notice of Proposed Rulemaking, the corresponding advisory circulars (2), and the corresponding brochure. The ARAC is anticipating a vote on these documents at this meeting.
- Status reports from all other working groups.

Attendance is open to the interested public, but will be limited to the space available. The public must make arrangements by July 12, 1996, to present oral statements at the meeting. The public may present written statements to the committee at any time by providing 25 copies to the Executive Director, or by bringing the copies to the meeting. In addition, sign and oral interpretation can be made available at the meeting, as well as an assistive listening device, if requested 10 calendar days before the meeting. Arrangements may be made by contacting the person listed under the heading **FOR FURTHER INFORMATION CONTACT.**

Issued in Washington, DC, on June 20, 1996.

Benjamin J. Burton, Jr.,

Acting Assistant Executive Director for Air Carrier/General Aviation Maintenance Issues, Aviation Rulemaking Advisory Committee.

[FR Doc. 96–16418 Filed 6–26–96; 8:45 am]

BILLING CODE 4910–13–M

Notice of Intent To Rule on Application (#96–02–C–00–BOI) To Impose and Use the Revenue From a Passenger Facility Charge (PFC) at Boise Air Terminal, Submitted by the Boise Air Terminal, Boise, Idaho

AGENCY: Federal Aviation Administration (FAA), DOT.

ACTION: Notice of intent to rule on application.

SUMMARY: The FAA proposes to rule and invites public comment on the application to impose and use PFC revenue at Boise Air Terminal under the provisions of 49 U.S.C. 40117 and Part 158 of the Federal Aviation Regulations (14 CFR 158).

DATES: Comments must be received on or before July 29, 1996.

ADDRESSES: Comments on this application may be mailed or delivered in triplicate to the FAA at the following address: J. Wade Bryant, Manager; Seattle Airports District Office, SEA–ADO; Federal Aviation Administration; 1601 Lind Avenue SW, Suite 250; Renton, WA 98055–4056.

In addition, one copy of any comments submitted to the FAA must be mailed or delivered to Mr. John W. Anderson, Airport Director, at the following address: Boise Air Terminal, 3201 Airport Way, Boise, ID 83705.

Air Carriers and foreign air carriers may submit copies of written comments previously provided to Boise Air Terminal, under section 158.23 of Part 158.

FOR FURTHER INFORMATION CONTACT: Ms. Sandra M. Simmons, (206) 227–2656; Seattle Airports District Office, SEA–ADO; Federal Aviation Administration; 1601 Lind Avenue SW, Suite 250; Renton, WA 98055–4056. The application may be reviewed in person at this same location.

SUPPLEMENTARY INFORMATION: The FAA proposes to rule and invites public comment on the application (#96–02–C–00–BOI) to impose and use PFC revenue at Boise Air Terminal, under the provisions of 49 U.S.C. 40117 and Part 158 of the Federal Aviation Regulations (14 CFR Part 158).

On June 20, 1996, the FAA determined that the application to impose and use the revenue from a PFC submitted by Boise Air Terminal, Boise, Idaho, was substantially complete within the requirements of section 158.25 of Part 158. The FAA will approve or disapprove the application, in whole or in part, no later than September 28, 1996.

The following is a brief overview of the application.

Level of the proposed PFC: $3.00.

Proposed charge effective date: November 1, 1997.

Proposed charge expiration date: February 1, 2001.

Total requested for use approval: $9,646,000.00.

Brief description of proposed project: Runway 10L/28R and taxiway extension; Runway 10R/28L overlay and lighting; Terminal access road improvements.

Class or classes of air carriers which the public agency has requested not be required to collect PFC's: Part 135 Air Taxi/Commercial operators who

conduct operations in air commerce carrying persons for compensation or hire, except air taxi/commercial operators public or private charters in aircraft with a seating capacity of 10 or more. This air taxi exemption is consistent with the current exemption in PFC application #1.

Any person may inspect the application in person at the FAA office listed above under **FOR FURTHER INFORMATION CONTACT** and at the FAA Regional Airports Office located at: Federal Aviation Administration, Northwest Mountain Region, Airports Division, ANM–600, 1601 Lind Avenue S.W., Suite 540, Renton, WA 98055–4056.

In addition, any person may, upon request, inspect the application, notice and other documents germane to the application in person at the Boise Air Terminal.

Issued in Renton, Washington on June 20, 1996.

Dennis G. Ossenkop,

Acting Manager, Planning, Programming and Capacity Branch, Northwest Mountain Region.

[FR Doc. 96–16415 Filed 6–26–96; 8:45 am]

BILLING CODE 4910–13–M

Notice of Intent To Rule on Application To Use the Revenue From a Passenger Facility Charge (PFC) at Manchester Airport

AGENCY: Federal Aviation Administration (FAA), DOT.

ACTION: Notice of intent to rule on application.

SUMMARY: The FAA proposes to rule and invites public comment on the application to use the revenue from a Passenger Facility Charge at Manchester Airport under the provisions of the Aviation Safety and Capacity Expansion Act of 1990 (Title IX of the Omnibus Budget Reconciliation Act of 1990) (Public Law 101–508) and Part 158 of the Federal Aviation Regulations (14 CFR Part 158).

DATES: Comments must be received on or before July 29, 1996.

ADDRESSES: Comments on this application may be mailed or delivered in triplicate to the FAA at the following address: Federal Aviation Administration, Airport Division, 12 New England Executive Park, Burlington, Massachusetts 01803.

In addition, one copy of any comments submitted to the FAA must be mailed or delivered to Mr. Alfred Testa, Jr., Airport Director for Manchester Airport at the following address: Manchester Airport, One Airport Road, Suite 300, Manchester, New Hampshire, 03103.

Air carriers and foreign air carriers may submit copies of written comments previously provided to the city of Manchester under section 158.23 of Part 158 of the Federal Aviation Regulations.

FOR FURTHER INFORMATION CONTACT: Priscilla A. Scott, Airports Program Specialist, Federal Aviation Administration, Airports Division, 12 New England Executive Park, Burlington, Massachusetts 01803, (617) 238–7614. The application may be reviewed in person at 16 New England Executive Park, Burlington, Massachusetts.

SUPPLEMENTARY INFORMATION: The FAA proposes to rule and invites public comment on the application to use the revenue from a Passenger Facility Charge (PFC) at Manchester Airport under the provisions of the Aviation Safety and Capacity Expansion Act of 1990 (Title IX of the Omnibus Budget Reconciliation Act of 1990) (Public Law 101–508) and Part 158 of the Federal Aviation Regulations (14 CFR Part 158).

On June 6, 1996, the FAA determined that the application to use the revenue from a OFC submitted by the city of Manchester was substantially complete within the requirements of section 158.25 of Part 158 of the Federal Aviation Regulations. The FAA will approve or disapprove the application, in whole or in part, no later than September 24, 1996.

The following is a brief overview of the use application.

PFC Project No.: 96–03–U–00–MHT,

Level of the proposed PFC: $3.00.

Charge effective date: January 1, 1993.

Estimated charge expiration date: September 1, 1997.

Estimated total net PFC revenue: $177,000.

Brief description of project: Acquire Aviation Easements for Runway 17 ILS.

Class or classes of air carriers which the public agency has requested not be required to collect PFCs: On demand Air Taxi/Commercial Operators (ATCO).

Any person may inspect the application in person at the FAA office listed above under **FOR FURTHER INFORMATION CONTACT.**

In addition, any person may, upon request, inspect the application, notice and other documents germane to the application in person at the Manchester Airport, One Airport Road, Suite 300, Manchester, New Hampshire 03103.

Issued in Burlington, Massachusetts on June 17, 1996.

Vincent A. Scarano,

Manager, Airports Division, New England Region.

[FR Doc. 96–16419 Filed 6–26–96; 8:45 am]

BILLING CODE 4910–13–M

National Highway Traffic Safety Administration

Discretionary Cooperative Agreement to Support National Occupant Protection Program

AGENCY: National Highway Traffic Safety Administration (NHTSA), Department of Transportation (DOT).

ACTION: Announcement of discretionary cooperative agreement to support the National Occupant Protection Program.

SUMMARY: The National Highway Traffic Safety Administration (NHTSA) announces the availability of a discretionary cooperative agreement to support the Secretary of Transportation's goals of increasing safety belt use to 75 percent by the year 1997. This notice solicits applications from national, non-profit professional organizations which have in-depth knowledge of transportation issues facing rural Americans. The organization must be interested in developing and implementing campaign strategies designed to increase safety belt use by rural populations, must have state and local affiliates, and must be able to reach a large number of rural communities across the United States. The purpose and result of this agreement will be to increase occupant safety restraint usage rates in selected rural areas. This agreement is scheduled for a period of eighteen (18) months.

DATES: Applications must be received at the office designated below on or before August 14, 1996.

ADDRESSES: Applications must be submitted to the National Highway Traffic Safety Administration, Office of Contracts and Procurement (NAD–30), Attn: Doris E. Medley, 400 7th Street, SW., Room 5301, Washington, DC 20590. All applications submitted must include a reference to NHTSA Cooperative Agreement No. DTNH22–96–H–05191.

FOR FURTHER INFORMATION CONTACT: Questions related to this cooperative agreement should be directed to Ms. JoAnn Murianka, National Organizations Division, NHTSA, Room 5118 (NTS–11), 400 7th St., SW., Washington, DC 20590. (202) 366–5198. General administrative questions may be directed to Ms. Doris E. Medley,

Office of Contracts and Procurement, at (202) 366–9560. Interested applicants are advised that no separate solicitation exists beyond the contents of this announcement.

SUPPLEMENTARY INFORMATION:

Background

Motor vehicle travel is the primary means of transportation in the United States, especially in rural America; providing an unprecedented degree of mobility. Yet for all its advantages, deaths and injuries resulting from motor vehicle crashes is the leading cause of death for persons every age from 6 to 28 years old. In 1994, 40,676 people lost their lives in motor vehicle crashes and another 3.2 million people were injured. 1994 FARS data also indicates that 58 percent, of the nation's 40,676 traffic related fatalities occurred in rural areas. Many of the deaths and injuries that occur on our roads are not unavoidable. Instead, the consequences of these crashes are the result of failing to take proper precautions such as wearing safety belts and bicycle helmets, and exhibiting unsafe driving behaviors such as speeding and impaired driving.

When they are worn, safety belts can reduce the chance of death or serious injury by nearly 50 percent. The National Center for Statistics and Analysis estimates that in 1994, an estimated 9,175 lives were saved and 211,000 moderate-to-critical injuries were prevented by the use of seat belts. If all front-seat occupants wore safety belts, an additional 9,529 lives could have been saved. The Crash Outcome Data Evaluation System (CODES) study results reveal that safety belts are highly effective in reducing morbidity and mortality. They also indicate that safety belts cause a downward shift in the severity of injuries. The study results showed that the average inpatient charge for unbelted passenger vehicle drivers admitted to an inpatient facility as a result of a crash injury was more than 55 percent greater than the average charge for those that were belted, $13,937 and $9,004, respectively. If, in the CODES states, (Hawaii, Maine, Missouri, New York, Pennsylvania, Utah, and Wisconsin) all unbelted passenger vehicle drivers had been wearing safety belts, it is estimated that inpatient charges would have been reduced by approximately $68 million and actual inpatient costs reduced by $47 million.

The enactment of seat belt use policies and laws coupled with education and enforcement programs can achieve high use rate levels and significantly reduce fatalities, injuries and associated costs. Project emphasis will be placed on actively supporting the traffic safety efforts of the law enforcement community, promoting injury promotion and enhancing capacity-building among the rural community to work with media to publicize Campaign Safe & Sober activities.

It is imperative that programs like Special Traffic Enforcement Programs (STEPS) be initiated which can increase public awareness of a specific traffic safety problem, such as non-use of safety restraints and/or impaired driving. STEP programs create a general perception within the community that there is an increased risk of being stopped for the targeted traffic violation. This general perception can help deter unsafe driving behaviors throughout the community.

Components of a STEP effort include: periods of intensified enforcement consisting of checkpoints, saturation patrols and other enforcement tactics to increase both the perceived and actual risk of arrest; a statewide or local media campaign to inform the public about the risks and costs of traffic crashes and the need for traffic laws and enforcement; local media events conducted immediately before and after increased enforcement efforts; community information for tracking progress and providing feedback, i.e., safety belt use rates, activity data, number of checkpoints, number of citations issued, number of lives saved and injuries prevented, etc. This information serves to keep the community informed of the added benefits of the STEP.

NHTSA is encouraging all states to utilize STEP programs to increase statewide safety belt use. Many states have already implemented STEPS, including North Carolina with their ''Click It or Ticket Program'' and 21 other states that have participated in NHTSA state law enforcement demonstration programs: Arizona, Florida, Illinois, Indiana, Iowa, Kentucky, Maryland, Minnesota, Mississippi, Nevada, New Jersey, New Mexico, Oregon, South Carolina, Tennessee, Texas, Utah, Vermont, Virginia, Washington, and Wisconsin.

Community support is essential for effective implementation of STEP programs. Before conducting a high visibility enforcement campaign, enforcement personnel need to be assured that community members and leaders endorse this type of activity. Experience has shown that law enforcement personnel are more likely to adopt and fully implement intensified enforcement programs if they have received encouragement from community spokes people and other local opinion leaders, such as political officials, health or medical representatives and the news media.

The primary objective of this cooperative agreement is to provide law enforcement agencies that serve rural areas with support and encouragement from local community groups in the form of personal contacts, letters, phone calls, public recognition, and other appropriate activities. This type of activity is needed in rural areas across the country. However, priority will be given to efforts directed at areas which already have STEP programs in place, such as the above 21 states, plus North Carolina with experience in the NHTSA law enforcement demonstration program.

Objectives

Under this cooperative agreement, the concepts of injury control, will be advanced through the promotion of safe traffic safety behaviors. Specific objectives for this cooperative agreement program are:

1. To educate rural residents concerning the need for strong occupant protection laws and aggressive law enforcement.
2. To encourage local law enforcement officials to implement aggressive, highly visible enforcement programs (STEPs).
3. To encourage local units of state police, or other patrol agencies to partner with other public service groups, EMS, local health department, etc., to participate in highly visible enforcement efforts.
4. To evaluate the effects of grassroots and community advocacy on the implementation of safety belt law enforcement programs in rural areas.
5. To increase safety belt use by rural populations and to decrease the number of fatal and serious injury crashes occurring in rural areas.

NHTSA Involvement

The NHTSA Office of Occupant Protection (OOP) will be involved in all activities undertaken as part of this cooperative agreement program and will:

1. Provide a Contracting Officer's Technical Representative (COTR) to participate in the planning and management of the cooperative agreement and to coordinate activities between the organization and OOP;
2. The COTR will work closely with the organization in review and approval of work plan, and review and approval of materials developed for PI&E;
3. Make available information and technical assistance from government

sources, including copies of any previously conducted NHTSA studies. Additional assistance shall be within resources available; and

4. Provide liaison with other government and private agencies as appropriate.

Period of Support

The proposed effort described in this announcement will be supported through the award of a single cooperative agreement. This cooperative agreement will be awarded for a project period of eighteen months, including submission of the final report. The total anticipated funding level is $75,000. The application for Federal Assistance should address what is proposed and can be accomplished within the time and funding constraints.

Eligibility Requirements

In order to be eligible to participate in this cooperative agreement, an organization must meet the following requirements:

1. Be a private, national, non-profit, rural-affiliated organization;

2. Have an established membership structure with state/local chapters or affiliates in a broad geographic region of the country;

3. Have a membership which includes, or which works in collaboration with health care officials;

4. Have in place a schedule of annual regional/state conferences or conventions and a variety of communication mechanisms that are appropriate for motivating members and other constituents to become involved in the promotion of occupant protection at state and local levels;

5. Demonstrate an understanding of the current and potential role affiliates can play in occupant protection efforts at the state and local levels; and,

6. Demonstrate top level support within the organization for the project, where appropriate, demonstrate similar support from the membership or local affiliates.

Application Procedures

Applicants must submit one original and two copies of their application package to NHTSA, Office of Contracts and Procurement (NAD–30), Attn: Doris E. Medley, 400 7th Street, S.W., Room 5301, Washington, DC 20590. Application must include a reference to NHTSA Cooperative Agreement No. DTNH22–96–H–05191. Only complete application packages received on or before August 14, 1996 shall be considered. Submission of three additional copies will expedite processing, but is not required.

1. The application package must be submitted with a Standard Form 424 (Rev. 4–88, including 424A and 424B), Application for Federal Assistance, with the required information filled in and certified assurances signed. While the Form 424A deals with budget information and section B identifies budget categories, the available space does not permit a level of detail which is sufficient to provide for a meaningful evaluation of the proposed total costs. A supplemental sheet shall be provided which presents a detailed breakdown of the proposed costs. The budget shall identify any cost-sharing contribution proposed by the applicant, as well as any additional financial commitments made by other sources. In preparing their cost proposals, applicants shall assume that the award will be made by September 30, 1996 and should prepare their applications accordingly.

2. Applicants shall include a project narrative statement which addresses the following:

(a) Identifies the objectives, goals, and anticipated outcomes of the proposed research effort and the approach or methods that will be used to achieve these ends, and discusses the specific issues previously mentioned in this Notice, i.e., to increase safety belt use by rural populations and to decrease the number of fatal and serious injury crashes occurring in rural areas.

(b) identifies the proposed plan for conducting the activities of the effort, including a schedule of milestones and their target dates, and for assessing the project accomplishments. It shall also include a plan for the effective dissemination of the results;

(c) Identifies the types and sources of data that will be used in this effort, including approaches to ensure comparability of data and the arrangements made or agreements entered into to ensure access to needed data. Prior to submitting any such data to NHTSA, the recipient will be required to purge any information from which the personal identity of individuals may be determined;

(d) Identifies the proposed program director and other key personnel identified for participation in the proposed effort, including description of their qualifications and their respective organizational responsibilities; and

(e) Describe the applicant's previous experience or on-going program that is related to his proposed effort.

Evaluation Criteria and Review Process

Proposals will be evaluated based upon the following factors which are not necessarily listed in order of importance:

1. What the organization proposes to accomplish and the potential of the proposed project to make a significant contribution to national efforts to increase the correct use of occupant restraints in rural areas.

2. The extent to which the project addresses foreseeable barriers to gaining widespread adoption of occupant protection and law enforcement activities by the selected rural population.

3. The overall experience, capability and commitment of the organization to facilitate involvement of its membership in the promotion of occupant protection and law enforcement in rural areas.

4. The soundness and feasibility of the proposed approach or work plan, including the evaluation to assess program outcomes.

5. How the organization will provide the administrative capability and staff expertise necessary to complete the proposed project.

6. The proposed coordination with and use of other available resources, including collaboration with state highway safety offices and other existing or planned state and community occupant protection programs.

7. How the organization plans to continue occupant protection and law enforcement educational activities.

Initially, all applications will be reviewed to confirm that the applicant is an eligible recipient and to assure that the application contains all of the information required by the Application Contents section of this notice. Each complete application from an eligible recipient will then be evaluated by a Technical Evaluation Committee using the criteria outlined above.

Terms and Conditions of the Award

1. Federal funds should be viewed as seed money to assist organizations in the development of traffic safety initiatives. Monies allocated in this cooperative agreement are not intended to cover all of the costs that will be incurred in completing this project. Applicants should demonstrate a commitment of financial and in-kind resources to the support of this project. The organization participating in this cooperative agreement program may use awarded funds to support salaries of individuals assigned to the project, the development or purchase of direct program materials, direct program-related activities, or for travel related to the cooperative agreement.

2. Prior to award, the recipient must comply with the certification requirements of 49 CFR Part 29, Department of Transportation

Government-wide Debarment and Suspension (Non-procurement) and Government-wide Requirements for Drug-Free Workplace (Grantees or Other Individuals). During the effective period of the cooperative agreement award as a result of this notice, the agreement shall be subject to the general administrative requirements of 49 CFR Part 19, Department of Transportation Uniform Administrative Requirements for Grants and Agreements with Institutions of Higher Education, Hospitals and Other Non-Profit Organizations; the cost principals of OMB Circular A–21, or A–122, or FAR 31.2 as applicable to the recipient, and the NHTSA General Provisions for Assistance Agreements.

3. Reports and Deliverables/Milestones. The recipient shall submit a work plan within one week after award; quarterly progress reports by the 15th day subsequent to quarter, draft final report and plan for self-sustenance within 16 months after award, and plan for self-sustenance and the final report within 18 months after award. An original and two copies of each report shall be submitted to the Contracting Officer Technical Representative. One copy of each report to be submitted to the Contracting Officer. Milestones include the development of campaign strategies and materials within two months after award; dissemination of materials and the conduct of training within four months after award, and the development of a plan for self-sustenance within 10 months after award.

4. *Specific Tasks.* The recipient shall: (1) Meet with the COTR within one week after the award of the cooperative agreement to review details of the recipient's proposed work plan and schedule for this project; (2) Work with NHTSA and finalize the work plan to reach the largest area with greatest effect. The plan shall include an evaluation component and shall acknowledge the need to build sustainable community programs; (3) Develop materials needed to reach local constituents, educate them on traffic safety and occupant protection issues, and train them to conduct effective community outreach—using existing materials as much as possible; (4) Disseminate materials along with training, etc., as necessary to implement plan; and (5) Collect evaluation data.

It is imperative that the recipient make provisions in the organization to continue the implementation of the program developed for at least 3 years after the completion of this cooperative agreement. Emphasis should be placed on making this an on-going program into existing activities.

Issued on: June 21, 1996.

James H. Hedlund,

Associate Administrator for Traffic Safety Program.

[FR Doc. 96–16484 Filed 6–26–96; 8:45 am]

BILLING CODE 4910–59–M

[Docket No. 96–028; Notice 2]

Decision that Nonconforming 1988 Nissan 240SX Passenger Cars are Eligible for Importation

AGENCY: National Highway Traffic Safety Administration (NHTSA), DOT.

ACTION: Notice of decision by NHTSA that nonconforming 1988 Nissan 240SX passenger cars are eligible for importation.

SUMMARY: This notice announces the decision by NHTSA that 1988 Nissan 240SX passenger cars not originally manufactured to comply with all applicable Federal motor vehicle safety standards are eligible for importation into the United States because they are substantially similar to a vehicle originally manufactured for importation into and sale in the United States and certified by its manufacturer as complying with the safety standards (the U.S.-certified version of the 1988 Nissan 240SX), and they are capable of being readily altered to conform to the standards.

DATES: This decision is effective as of June 27, 1996.

FOR FURTHER INFORMATION CONTACT: George Entwistle, Office of Vehicle Safety Compliance, NHTSA (202–366–5306).

SUPPLEMENTARY INFORMATION:

Background

Under 49 U.S.C. § 30141(a)(1)(A) (formerly section 108(c)(3)(A)(i) of the National Traffic and Motor Vehicle Safety Act (the Act)), a motor vehicle that was not originally manufactured to conform to all applicable Federal motor vehicle safety standards shall be refused admission into the United States unless NHTSA has decided that the motor vehicle is substantially similar to a motor vehicle originally manufactured for importation into and sale in the United States, certified under 49 U.S.C. § 30115 (formerly section 114 of the Act), and of the same model year as the model of the motor vehicle to be compared, and is capable of being readily altered to conform to all applicable Federal motor vehicle safety standards.

Petitions for eligibility decisions may be submitted by either manufacturers or importers who have registered with NHTSA pursuant to 49 CFR Part 592. As specified in 49 CFR 593.7, NHTSA publishes notice in the Federal Register of each petition that it receives, and affords interested persons an opportunity to comment on the petition. At the close of the comment period, NHTSA decides, on the basis of the petition and any comments that it has received, whether the vehicle is eligible for importation. The agency then publishes this decision in the Federal Register.

Pierre Enterprises Southeast, Inc. of Fort Pierce, Florida (Registered Importer 96–098) petitioned NHTSA to decide whether 1988 Nissan 240SX passenger cars are eligible for importation into the United States. NHTSA published notice of the petition on April 5, 1996 (61 FR 15332) to afford an opportunity for public comment. The reader is referred to that notice for a thorough description of the petition. No comments were received in response to the notice. Based on its review of the information submitted by the petitioner, NHTSA has decided to grant the petition.

Vehicle Eligibility Number for Subject Vehicles

The importer of a vehicle admissible under any final decision must indicate on the form HS–7 accompanying entry the appropriate vehicle eligibility number indicating that the vehicle is eligible for entry. VSP–162 is the vehicle eligibility number assigned to vehicles admissible under this decision.

Final Decision

Accordingly, on the basis of the foregoing, NHTSA hereby decides that a 1988 Nissan 240SX not originally manufactured to comply with all applicable Federal motor vehicle safety standards is substantially similar to a 1988 Nissan 240SX originally manufactured for importation into and sale in the United States and certified under 49 U.S.C. § 30115, and is capable of being readily altered to conform to all applicable Federal motor vehicle safety standards.

Authority: 49 U.S.C. 30141(a)(1)(A) and (b)(1); 49 CFR 593.8; delegations of authority at 49 CFR 1.50 and 501.8.

Issued on: June 21, 1996.

Marilynne Jacobs

Director, Office of Vehicle Safety Compliance

[FR Doc. 96–16383 Filed 6–26–96; 8:45 am]

BILLING CODE 4910–59–P

[Docket No. 96–10; Notice 2]

Decision That Nonconforming 1992 Ferrari 348TS Passenger Cars Are Eligible for Importation

AGENCY: National Highway Traffic Safety Administration (NHTSA), DOT.

ACTION: Notice of decision by NHTSA that nonconforming 1992 Ferrari 348TS passenger cars are eligible for importation.

SUMMARY: This notice announces the decision by NHTSA that 1992 Ferrari 348TS passenger cars not originally manufactured to comply with all applicable Federal motor vehicle safety standards are eligible for importation into the United States because they are substantially similar to a vehicle originally manufactured for importation into and sale in the United States and certified by its manufacturer as complying with the safety standards (the U.S.-certified version of the 1992 Ferrari 348TS), and they are capable of being readily altered to conform to the standards.

DATES: This decision is effective as of June 27, 1996.

FOR FURTHER INFORMATION CONTACT: George Entwistle, Office of Vehicle Safety Compliance, NHTSA (202–366–5306).

SUPPLEMENTARY INFORMATION:

Background

Under 49 U.S.C. § 30141(a)(1)(A) (formerly section 108(c)(3)(A)(i) of the National Traffic and Motor Vehicle Safety Act (the Act)), a motor vehicle that was not originally manufactured to conform to all applicable Federal motor vehicle safety standards shall be refused admission into the United States unless NHTSA has decided that the motor vehicle is substantially similar to a motor vehicle originally manufactured for importation into and sale in the United States, certified under 49 U.S.C. § 30115 (formerly section 114 of the Act), and of the same model year as the model of the motor vehicle to be compared, and is capable of being readily altered to conform to all applicable Federal motor vehicle safety standards.

Petitions for eligibility decisions may be submitted by either manufacturers or importers who have registered with NHTSA pursuant to 49 CFR Part 592. As specified in 49 CFR 593.7, NHTSA publishes notice in the Federal Register of each petition that it receives, and affords interested persons an opportunity to comment on the petition. At the close of the comment period, NHTSA decides, on the basis of the petition and any comments that it has received, whether the vehicle is eligible for importation. The agency then publishes this decision in the Federal Register.

LPC of New York, Inc. of Ronkonkoma, New York (''LPC'') (Registered Importer R–96–100) petitioned NHTSA to decide whether 1992 Ferrari 348TS passenger cars are eligible for importation into the United States. NHTSA published notice of the petition on February 22, 1996 (61 FR 6890) to afford an opportunity for public comment. As stated in the notice of petition, the vehicle which LPC believes is substantially similar is the 1992 Ferrari 348TS that was manufactured for importation into, and sale in, the United States and certified by its manufacturer as conforming to all applicable Federal motor vehicle safety standards.

The petitioner claimed that it carefully compared the non- U.S. certified 1992 Ferrari 348TS to its U.S. certified counterpart, and found the two vehicles to be substantially similar with respect to compliance with most Federal motor vehicle safety standards.

Specifically, the petitioner claimed that the non-U.S. certified 1992 Ferrari 348TS is identical to its U.S. certified counterpart with respect to compliance with Standard Nos. 102 *Transmission Shift Lever Sequence* * * *, 103 *Defrosting and Defogging Systems,* 104 *Windshield Wiping and Washing Systems,* 105 *Hydraulic Brake Systems,* 106 *Brake Hoses,* 107 *Reflecting Surfaces,* 109 *New Pneumatic Tires,* 111 *Rearview Mirrors,* 113 *Hood Latch Systems,* 116 *Brake Fluid,* 118 *Power Window Systems,* 124 *Accelerator Control Systems,* 201 *Occupant Protection in Interior Impact,* 202 *Head Restraints,* 203 *Impact Protection for the Driver From the Steering Control System,* 204 *Steering Control Rearward Displacement,* 205 *Glazing Materials,* 206 *Door Locks and Door Retention Components,* 207 *Seating Systems,* 209 *Seat Belt Assemblies,* 210 *Seat Belt Assembly Anchorages,* 211 *Wheel Nuts, Wheel Discs and Hubcaps,* 212 *Windshield Retention,* 214 *Side Impact Protection,* 216 *Roof Crush Resistance,* 219 *Windshield Zone Intrusion,* 301 *Fuel System Integrity,* and 302 *Flammability of Interior Materials.*

Additionally, the petitioner stated that the non-U.S. certified 1992 Ferrari 348TS complies with the Bumper Standard found in 49 CFR Part 581.

Petitioner also contended that the vehicle is capable of being readily altered to meet the following standards, in the manner indicated:

Standard No. 101 *Controls and Displays:* (a) placement of the appropriate symbols on the brake failure, parking brake, and seat belt warming lamps; (b) replacement of the speedometer/odometer, which is calibrated in kilometers per hour, with a U.S.- model component calibrated in miles per hour.

Standard No. 108 *Lamps, Reflective Devices and Associated Equipment:* (a) installation of U.S.-model headlamp assemblies which incorporate sealed beam headlamps and front sidemarkers; (b) installation of U.S.-model taillamps; (c) installation of a high mounted stop lamp.

Standard No. 110 *Tire Selection and Rims:* installation of a tire information placard.

Standard No. 114 *Theft Protection*: installation of a warning buzzer in the steering lock electrical circuit.

Standard No. 115 *Vehicle Identification Number*: installation of a VIN plate that can be read from outside the left windshield pillar, and a VIN reference label on the edge of the door or latch post nearest the driver.

Standard No. 208 *Occupant Crash Protection:* installation of a seat belt warning buzzer. The petitioner stated that the vehicle is equipped with automatic seat belt assemblies that have part numbers identical to those on its U.S. certified counterpart.

One comment was received in response to the notice of the petition, from Fiat Auto U.S.A., Inc. (Fiat), the United States representative of Ferrari S.p.A., the vehicle's manufacturer. In its comment, Fiat stated that Ferrari has invested considerable resources in the design and production of vehicles that comply with the Federal motor vehicle safety standards. Although it stated that it has not determined what modifications are necessary to bring a vehicle into compliance with the Federal safety standards, Fiat contended that it is not possible to achieve such compliance by simply retrofitting a vehicle built for the European market, without conducting extensive development and testing.

Fiat additionally challenged the petitioner's claim that the non-U.S. certified 1992 Ferrari 348TS is identical to its U.S. certified counterpart with respect to compliance with certain standards. Fiat disputed the petitioner's contention that the non-U.S. certified 1992 Ferrari 348TS is equipped with automatic seat belts. Instead, Fiat asserted that Ferrari uses a motorized 2-point shoulder belt in conjunction with a manual 2-point lap belt on its U.S. certified vehicles, and a manual 3-point seat belt on its non-U.S. vehicles. Fiat characterized these two systems as being entirely distinct with respect to

their certification, labeling, and part numbers for purposes of Standard No. 209 compliance. Additionally, Fiat observed that non-U.S. certified Ferraris cannot be readily modified to comply with Standard No. 208. Fiat contended that ''major alterations'' would be necessary to achieve such compliance, including the addition of an energy-absorbing knee bolster under the dashboard, the creation of new belt anchorage points to accommodate an automatic belt system, the modification of side members to fit motorized shoulder belt tracks, and the addition of a new electronic control unit and wiring for the automatic belt system.

Fiat also noted that U.S. certified Ferraris have 4-point seat belt anchorages to comply with Standard No. 210, while the non-U.S. certified vehicles have 3-point anchorages. Fiat further noted that only the U.S. vehicles have a steel beam in the inner door and a stronger structure on both sides of the door to comply with Standard No. 214, as well as a warning buzzer to indicate that the left door is open. Fiat contended that it would be difficult to properly install the door beam and reinforce the sides of a non-U.S. certified vehicle. Fiat also contended that U.S. certified Ferraris have a stronger front and rear chassis so that they can pass front, rear, and side impact tests under Standard No. 301. Fiat further noted that U.S. certified Ferraris have unique bumpers and brackets with the strength required to pass the pendulum and barrier tests under the Bumper Standard.

NHTSA accorded LPC an opportunity to respond to Fiat's comments. In its response, LPC noted that Ferrari from time to time, for reasons unknown to LPC, installs various U.S. certified components, structures, supports, and hardware on vehicles that are not intended for sale in this country. LPC stated that its petition identified the U.S. certified components, along with their associated structures, brackets, and hardware, which are either installed on the non-U.S. certified vehicle when originally manufactured, or that can be readily installed to produce a vehicle identical to the U.S. certified version.

Specifically, LPC asserted that the non-U.S. certified 1992 Ferrari 348TS is equipped by its manufacturer with a U.S. certified automatic belt system, as well as anchor points, knee bolster, and other components necessary to comply with Standard Nos. 208, 209, and 210. Additionally, LPC contended that the non-U.S. certified 1992 Ferrari 348TS is equipped by its manufacturer with U.S. certified door assemblies that comply with Standard No. 214. LPC also asserted that the non-U.S. certified vehicle is equipped with U.S. certified front and rear bumpers, structures, supports, and hardware to meet the Bumper Standard, as well as fuel system integrity components necessary to meet Standard No. 301.

NHTSA has reviewed each of the issues that Fiat has raised regarding LPC's petition. NHTSA believes that LPC's responses adequately address each of those issues. NHTSA further notes that the modifications described by LPC have been performed with relative ease on thousands of nonconforming vehicles imported over the years, and would not preclude the non-U.S. certified 1992 Ferrari 348TS from being found ''capable of being readily modified to comply with all Federal motor vehicle safety standards.''

NHTSA has accordingly decided to grant the petition.

Vehicle Eligibility Number for Subject Vehicles

The importer of a vehicle admissible under any final decision must indicate on the form HS–7 accompanying entry the appropriate vehicle eligibility number indicating that the vehicle is eligible for entry. VSP–161 is the vehicle eligibility number assigned to vehicles admissible under this decision.

Final Decision

Accordingly, on the basis of the foregoing, NHTSA hereby decides that a 1992 Ferrari 348TS not originally manufactured to comply with all applicable Federal motor vehicle safety standards is substantially similar to a 1992 Ferrari 348TS originally manufactured for importation into and sale in the United States and certified under 49 U.S.C. § 30115, and is capable of being readily altered to conform to all applicable Federal motor vehicle safety standards.

Authority: 49 U.S.C. 30141(a)(1)(A) and (b)(1); 49 CFR 593.8; delegations of authority at 49 CFR 1.50 and 501.8.

Issued on: June 21, 1996.

Marilynne Jacobs,

Director, Office of Vehicle Safety Compliance.

[FR Doc. 96–16383 Filed 6–26–96; 8:45 am]

BILLING CODE 4910–59–P

Surface Transportation Board [1]

[STB Finance Docket No. 32947 (Sub-No. 1)]

The A&G Railroad, L.L.C.—Merger—The Bay Line Railroad, L.L.C.—Corporate Family Transaction Exemption

The A&G Railroad, L.L.C. (A&G) and The Bay Line Railroad, L.L.C. (Bay Line) (applicants), both of which are controlled by K. Earl Durden and Green Bay Packaging, Inc., filed a notice of exemption to undertake a transaction within their corporate family that would merge A&G into Bay Line. The transaction is expected to be consummated on or after the June 24, 1996 effective date of the exemption.

A&G owns and operates approximately 27 miles of rail line between Abbeville and Grimes, AL, and operates over 7 miles of CSX Transportation, Inc.'s (CSXT) rail line between Grimes and the Bay Line's rail yard in Dothan, AL, pursuant to incidental trackage rights.

Bay Line owns and operates approximately 79 miles of rail line between Dothan, AL, and Panama City, FL. It interchanges with CSXT at Cottondale, FL, and with CSXT, Norfolk Southern Railway Company, the Hartford & Slocomb Railroad Company, and the A&G at Dothan.

This transaction is related to a notice of exemption concurrently filed in STB Finance Docket No. 32947 (Sub-No. 2), *K. Earl Durden—Acquisition of Control Exemption—Rail Partners, L.P., et al.,* in which K. Earl Durden will acquire 100% control of Rail Partners, L.P., Rail Management and Consulting Corporation, and other shortline railroads.

This is a transaction within a corporate family of the type specifically exempted from prior review and approval under 49 CFR 1180.2(d)(3). The parties state that the transaction will not result in adverse changes in service levels, significant operational changes, or a change in the competitive balance with carriers outside applicants' corporate family. The stated purposes of the transaction are to streamline management of the two rail carriers and to facilitate consummation of the transaction in STB Finance Docket No. 32947 (Sub-No. 2).

[1] The ICC Termination Act of 1995, Pub. L. No. 104–88, 109 Stat. 803, which was enacted on December 29, 1995, and took effect on January 1, 1996, abolished the Interstate Commerce Commission and transferred certain functions to the Surface Transportation Board (Board). This decision relates to functions that are subject to Board jurisdiction pursuant to 49 U.S.C. 11323–25.

Under 49 U.S.C. 10502(g), the Board may not use its exemption authority to relieve a rail carrier of its statutory obligation to protect the interests of its employees. Section 11326(c), however, does not provide for labor protection for transactions under sections 11324–25 that involve only Class III rail carriers. Because this transaction involves Class III rail carriers only, the Board, under the statute, may not impose labor protective conditions for this transaction.

If the verified notice contains false or misleading information, the exemption is void *ab initio*. Petitions to reopen the proceeding to revoke the exemption under 49 U.S.C. 10502(d) may be filed at any time. The filing of a petition to reopen will not automatically stay the transaction. An original and 10 copies of all pleadings, referring to STB Finance Docket No. 32947 (Sub-No. 2), must be filed with the Office of the Secretary, Case Control Branch, Surface Transportation Board, 1201 Constitution Avenue, NW, Washington, DC 20423. In addition, a copy of each pleading must be served on Edward J. McAndrew, Slover & Loftus, 1224 Seventeenth Street, N.W., Washington, D.C. 20036.

Decided: June 21, 1996.

By the Board, David M. Konschnik, Director, Office of Proceedings.

Vernon A. Williams,

Secretary.

[FR Doc. 96–16409 Filed 6–26–96; 8:45 am]

BILLING CODE 4915–00–P

Surface Transportation Board [1]

[STB Finance Docket No. 32947 (Sub-No. 2)]

K. Earl Durden—Acquisition of Control Exemption— Rail Partners, L.P., Et Al.

K. Earl Durden (Durden), a noncarrier individual, has filed a notice of exemption to acquire control of Rail Partners, L.P. (Partners), Rail Management and Consulting Corporation (RMCC) and 12 commonly-controlled shortline railroads (hereinater the RMCC Railroad Group) [2] through his purchase of Green Bay Packaging, Inc.'s (GBP) ownership interests in the aforementioned entities and railroads. Currently, Durden and GBP each hold a 49.5% interest and RMC holds a 1% interest in Partners, a Delaware limited partnership; Durden and GBP each own a 50% interest in RMCC, a non-carrier holding company; and Durden and GBP each own a 50% interest in each of the railroads in the RMCC Railroad Group. By this transaction, Durden will acquire 100% ownership and control in Partners, RMCC, and the RMCC Railroad Group. The exemption will be effective on June 24, 1996, and the parties intend to consummate this transaction on June 30, 1996.

This transaction is related to a notice of exemption concurrently filed in STB Finance Docket No. 32947 (Sub-No. 1), *The A&G Railroad, L.L.C.—Merger—The Bay Line Railroad, L.L.C.—Corporate Family Transaction Exemption*, for a transaction which would merge the properties of two intracorporate family rail carriers, whose operations connected via trackage rights over a third (unaffiliated) carrier. Once the merger is consummated, the proposed acquisition of control by Durden qualifies for the class exemption for acquisition of control in this proceeding.

Durden states that: (1) The transaction will not result in any of the subject railroads connecting with one another or any railroads in their corporate family; (2) the proposed transaction is not part of a series of anticipated transactions that would connect the subject railroads with each other or any railroad in their corporate family; and the transaction involves only Class III carriers. The transaction therefore is exempt from the prior approval requirements of 49 U.S.C. 11323. *See* 49 CFR 1180.2(d)(2).

Under 49 U.S.C. 10502(g), the Board may not use its exemption authority to relieve a rail carrier of its statutory obligation to protect the interests of its employees. Section 11326(c), however, does not provide for labor protection for transactions under sections 11324–25 that involve only Class III rail carriers. Because this transaction involves Class III rail carriers only, the Board, under the statute, may not impose labor protective conditions for this transaction.

If the verified notice contains false or misleading information, the exemption is void *ab initio*. Petitions to reopen the proceeding to revoke the exemption under 49 U.S.C. 10502(d) may be filed at any time. The filing of a petition to reopen will not automatically stay the transaction. An original and 10 copies of all pleadings, referring to STB Finance Docket No. 32947 (Sub-No. 2), must be filed with the Office of the Secretary, Case Control Branch, Surface Transportation Board, 1201 Constitution Avenue, NW, Washington, DC 20423. In addition, a copy of each pleading must be served on Edward J. McAndrew, Slover & Loftus, 1224 Seventeenth Street, N.W., Washington, D.C. 20036.

Decided: June 21, 1996.

By the Board, David M. Konschnik, Director, Office of Proceedings.

Vernon A. Williams,

Secretary.

[FR Doc. 96–16408 Filed 6–26–96; 8:45 am]

BILLING CODE 4915–00–P

[1] The ICC Termination Act of 1995, Pub. L. No. 104–88, 109 Stat. 803, which was enacted on December 29, 1995, and took effect on January 1, 1996, abolished the Interstate Commerce Commission and transferred certain functions to the Surface Transportation Board (Board). This decision relates to functions that are subject to Board jurisdiction pursuant to 49 U.S.C. 11323–25.

[2] The 12 railroads are: Atlantic & Western Railway, L.P.; The Bay Line Railroad, L.L.C.; Copper Basin Railway; East Tennessee Railway, L.P.; Galveston Railroad, L.P.; Georgia Central Railway, L.P.; KWT Railway, Inc.; Little Rock & Western Railway, L.P.; Tomahawk Railway, L.P.; Valdosta Railway, L.P.; Western Kentucky Railway, L.L.C.; and Wilmington Terminal Railroad, L.P., which are located in Alabama, Arizona, Arkansas, Florida, Georgia, Kentucky, North Carolina, Tennessee, Texas, and Wisconsin.

Surface Transportation Board [1]

[STB Finance Docket No. 32753]

R.J. Corman Railroad Company/ Western Ohio Line—Modified Rail Certificate—Between Lima and Glenmore, OH

On May 13, 1996, R.J. Corman Railroad Company/Western Ohio Line (RJCW) filed a notice for a modified certificate of public convenience and necessity under 49 CFR 1150.23 to operate as a sub-operator a line of railroad, the SPEG Line, between milepost 54.4 at Lima, OH, and milepost 84.2 at Glenmore, OH.

The line was formerly part of the main line of the bankrupt Erie Lackawanna Railway Company (EL) between New York and Chicago. The line was not designated for transfer to Consolidated Rail Corporation (Conrail), but was available for subsidy under section 304 of the Regional Rail Reorganization Act of 1973 (3R Act). *USRA-Final System Plan-July 1975—Vol. II*, page 122. Under section 304, EL gave notice of intent to abandon the line effective March 31, 1976. In 1977, the line was acquired by the Ohio Rail Transportation Authority, and the Spencerville & Elgin Railroad Company (SPEG) was designated as operator. *Certificate of Designated Operator—Spencerville & Elgin Railroad Company*, D–OP 23 (ICC served Feb. 13, 1979).

[1] The ICC Termination Act of 1995, Pub. L. No. 104–88, 109 Stat. 803 (the ICCTA), which was enacted on December 29, 1995, and took effect on January 1, 1996, abolished the Interstate Commerce Commission and transferred certain functions to the Surface Transportation Board (Board). This notice relates to functions that are subject to Board jurisdiction pursuant to 49 U.S.C. 10901 and 10903.

The State of Ohio purchased the line from EL's bankruptcy estate in 1981, and the Van Wert County and Allen County Port Authorities (Authorities) acquired the line from the State in September 1982. In 1990, SPEG gave notice of intent to terminate service and no longer provides service on the line.[2]

Indiana Hi-Rail Corporation (IHRC) took over operations on the line in 1991, and acquired a modified rail certificate to operate the line. *Indiana Hi-Rail Corporation—Modified Rail Certificate,* Finance Docket No. 31871 (ICC served June 20, 1991). IHRC ceased service on the line in November 1993.

Pursuant to a sub-operating agreement dated March 26, 1996, and an addendum dated April 3, 1996, between RJCW (sub-operator) and SPEG (operator), RJCW will assume operations over the line for a two-year period from May 20, 1996, to May 20, 1998, subject to renewal upon agreement by the parties.

This rail line qualifies for a modified certificate of public convenience and necessity. A rail line which was approved for abandonment under the Final System Plan, but over which operations were continued by a D–OP, has been ''fully abandoned, or approved for abandonment'' within the meaning of 49 CFR 1150.21. *See Common Carrier Status of States, State Agencies and Instrumentalities, and Political Subdivisions,* Finance Docket No. 28990F (ICC served July 16, 1981), pp. 9–10.

No subsidy is involved and there are no preconditions for shippers to meet in order to receive rail service. Operations over the line will be conducted for a two-year period, subject to renewal upon agreement by the parties, unless terminated upon appropriate notice in accordance with 49 CFR 1150.24.

This line connects with Conrail at Lima and with IHRC at Ohio City, OH. RJCW will interchange traffic with CSX Transportation, Inc., Norfolk and Western Railway Company, and its existing line at Lima, which will promote new business on the line.

This notice must be served on the Association of American Railroads (Car Service Division) as agent of all railroads subscribing to the car-service and car-hire agreement: Association of American Railroads, 50 F St., NW., Washington, DC 20001; and on the American Short Line Railroad Association: American Short Line Railroad Association, 1120 G St., NW., Suite 520, Washington, DC 20005.

Decided: June 19, 1996.

By the Board, David M. Konschnik, Director, Office of Proceedings.

Vernon A. Williams,

Secretary.

[FR Doc. 96–16407 Filed 6–26–96; 8:45 am]

BILLING CODE 4915–00–P

[2] While no longer conducting operations as a rail carrier, SPEG remains in existence as a wholly owned subsidiary of an on-line shipper, Countrymark Cooperative, Inc. Under an existing contract between SPEG and the Authorities, SPEG is responsible for administering the line and arranging for an operator to provide rail service thereon.

Surface Transportation Board[1]

[STB Docket No. AB–449 (Sub-No. 2)]

Western Kentucky Railway, L.L.C.—Abandonment—Between Blackford and Princeton, KY

The Board has issued a certificate authorizing Western Kentucky Railway, L.L.C. (WKR), to abandon its 34.75-mile line between milepost JE62.5 at Blackford and milepost JE97.25 at Princeton, in Crittenden and Caldwell Counties, KY, subject to the standard employee protective conditions.

The abandonment certificate will become effective on July 27, 1996, unless within 15 days after publication of this notice, the Board finds that: (1) a financially responsible person has offered financial assistance (through subsidy or purchase) to enable rail service to be continued.

Requests for public use conditions must be filed with the Board and WKR no later than July 8, 1996.

Any offers of financial assistance must also be filed with the Board and WKR no later than July 8, 1996. The offer, referring to Docket No. AB–449 (Sub-No. 2), must be addressed to: (1) Surface Transportation Board, Office of the Secretary, Case Control Branch, 1201 Constitution Ave., N.W., Washington, DC 20423; and (2) Patricia E. Kolesar, Slover and Loftus, 1224 17th Street, N.W., Washington, DC 20036. The following notation must be typed in bold face on the lower left-hand corner of the envelope containing the offer: ''Office of Proceedings, AB–OFA''. Any offer previously made must be remade within this 10-day period.

Information and procedures regarding financial assistance for continued rail service are contained in 49 U.S.C. 10903 and 49 CFR 1152.27. Requests for public use conditions must conform with 49 CFR 1152.28(a)(2). Additional information is contained in the Board's decision. To purchase a copy of the full decision, write to, call, or pick up in person from: DC News & Data, Inc., Room 2229, 1201 Constitution Ave., N.W., Washington, DC 20423. Telephone: (202) 289–4357/4359. [Assistance for the hearing impaired is available through TDD services at (202) 927–5721.]

Decided: June 20, 1996.

By the Board, David M. Konschnik, Director, Office of Proceedings.

Vernon A. Williams,

Secretary.

[FR Doc. 96–16410 Filed 6–26–96; 8:45 am]

BILLING CODE 4915–00–P

[1] The ICC Termination Act of 1995, Pub. L. No. 104–88, 109 Stat. 803, which was enacted on December 29, 1995, and took effect on January 1, 1996, abolished the Interstate Commerce Commission and transferred certain functions to the Surface Transportation Board (Board). This notice relates to functions that are subject to Board jurisdiction pursuant to 49 U.S.C. 10903.

Federal Aviation Administration

Proposed Advisory Circular (AC) 23.733–X, Tundra Tires

AGENCY: Federal Aviation Administration (FAA), DOT.

ACTION: Notice of availability of Proposed Advisory Circular (AC) 23.733–X, and request for comments.

SUMMARY: This notice announces the availability of and request for comments on a proposed advisory circular (AC) that serves several purposes. First, it summarizes the results of flight tests recommended by the National Transportation Safety Board (NTSB) and conducted by the Federal Aviation Administration (FAA) investigating the effects of tundra tires installed on a Piper PA–18. Second, it provides information concerning possible hazards associated with the type of operations common for tundra tire users and potential adverse effects of untested installations. Third, it provides general information about the certification process for oversize ''tundra'' tires, as well as an example ''compliance checklist'' for the installation of such tires on light airplanes, which have Civil Air Regulations (CAR) part 3 for a certification basis.

DATES: Comments must be received on or before July 29, 1996.

ADDRESSES: Send all comments on the proposed AC to: Federal Aviation Administration, Attention: Standards Office, ACE–110, Small Airplane Directorate, Aircraft Certification Service, 601 East 12th Street, Kansas City, Missouri 64106.

FOR FURTHER INFORMATION CONTACT: Terre Flynn, Regulations and Policy Branch, ACE–111, at the address above, telephone number (816) 426–6941.

SUPPLEMENTARY INFORMATION: Any person may obtain a copy of this

proposed AC by contacting the person named above under **FOR FURTHER INFORMATION CONTACT.**

Comments Invited

Interested parties are invited to submit such written data, views, or arguments as they may desire. Comments must identify the AC and submit comments to the address specified above. All communications received on or before the closing date for comments will be considered by the Standards Staff before issuing the final AC. Comments may be inspected at FAA, Aircraft Certification Service, Small Airplane Directorate, Standards Office, ACE–110, Suite 900, 1201 Walnut, Kansas City, Missouri, between the hours of 7:30 a.m. and 4:00 p.m. weekdays, except Federal holidays.

Background

In its Safety Recommendation A–95–13, dated February 7, 1995, the NTSB shared some of their safety concerns about tundra tires with the FAA and requested that the possibility of problems with tundra tires be investigated. The NTSB stated: ''Since the early 1960s, hundreds of airplanes operating in Alaska have been equipped with tundra tires, and dozens of versions of tundra tires—some exceeding 35 inches in diameter—have been marketed. The Safety Board is concerned that filed approvals and STC's have been granted for use of these tires without flight test or other data on the aerodynamic effects of the tires and wheels. The Piper PA–18 is the airplane most frequently equipped with tundra tires. The Safety Board believes that the FAA should conduct a demonstration flight test to determine the effects of tundra tires on the PA–18's flight characteristics, including cruise, climb, takeoff, and landing performance; and, in both straight and turning flight, stall warning and aircraft stability at or near the critical angle of attack. Further, if the tests of the PA–18 indicate the need, the FAA should take corrective action and expand testing to other airplane types equipped with oversized tires.''

Issued in Kansas City, Missouri, on June 20, 1996.

Henry A. Armstrong,

Acting Manager, Small Airplane Directorate, Aircraft Certification Service.

[FR Doc. 96–16416 Filed 6–26–96; 8:45 am]

BILLING CODE 4910–13–M

UNITED STATES INFORMATION AGENCY

International Education and Cultural Activities—Discretionary Grant Program

ACTION: Notice; Request for proposals.

SUMMARY: The Office of Citizen Exchanges (E/P) of the United States Information Agency's Bureau of Educational and Cultural Affairs announces an open competition for an assistance award program. Public or private non-profit organizations meeting the provisions described in IRS regulation 26 CFR 1.501(c)(3)–1 may apply to develop projects that link their international exchange interests with counterpart institutions/groups in ways supportive of the aims of the Bureau of Educational and Cultural Affairs. Overall grant making authority for this program is contained in the Mutual Educational and Cultural Exchange Act of 1961, as amended, Public Law 87–256, also known as the Fulbright Hays Act.

The purpose of the Act is ''to enable the Government of the United States to increase mutual understanding between the people of the United States and the people of other countries * * *; to strengthen the ties which unite us with other nations by demonstrating the educational and cultural interests, developments, and achievements of the people of the United States and other nations. * * * and thus to assist in the development of friendly, sympathetic and peaceful relations between the United States and the other countries of the world.'' Programs and projects must conform with Agency requirements and guidelines outlined in the Application Package. USIA projects and programs are subject to the availability of funds.

Interested applicants should read the complete Federal Register announcement before addressing inquiries to the Office of Citizen Exchanges or submitting their proposals. Once the RFP deadline has passed, the Office of Citizen Exchanges may not discuss this competition in any way with applicants until after the Bureau program and project review process has been completed.

ANNOUNCEMENT NAME AND NUMBER: All communications concerning this announcement should refer to the Annual Discretionary Grant Program. The announcement number is E/P–97–1. Please refer to title and number in all correspondence or telephone calls to USIA.

Deadline for Proposals: All copies must be received at the U.S. Information Agency by 5 p.m. Washington, DC time on Friday, October 11, 1996. Faxed documents will not be accepted, nor will documents postmarked on October 11, 1996, but received at a later date. It is the responsibility of each grant applicant to ensure that proposals are received by the above deadline. This action is effective from the publication date of this notice through October 11, 1996, for projects where activities will begin between January 1, 1997 and December 31, 1997.

FOR FURTHER INFORMATION CONTACT: Interested organizations/institutions must contact the Office of Citizen Exchanges, E/PL, Room 216, United States Information Agency, 301 4th Street, SW., Washington, DC 20547, (202) 619–5326, to request detailed application packets which include award criteria; all application forms; and guidelines for preparing proposals, including specific criteria for preparation of the proposal budget. Please direct inquiries and correspondence to USIA Program Officer *Laverne Johnson,* E-Mail {LJohnson@USIA.GOV}.

TO DOWNLOAD A SOLICITATION PACKAGE VIA INTERNET: The Solicitation Package may be downloaded from USIA's website at http://www.usia.gov/ or from the Internet Gopher at gopher://gopher.usia.gov. Under the heading ''International Exchanges/Training'' select ''Request for Proposals (RFPs).'' Please read ''About the Following RFPs'' before beginning to download.

ADDRESSES: Applicants must follow all instructions given in the Application Package and send only complete applications with 15 copies to:

U.S. Information Agency, REF: E/P–97–1 Annual Discretionary Grant Competition, Grants Management Division (E/XE), 301–4th Street, SW., Room 336, Washington, DC 20547.

Applicants must also submit to E/XE the ''Executive Summary'' and ''Narrative'' sections of each proposal on a 3.5″ diskette, formatted for DOS. This material must be provided in ASCII text (DOS) format with a maximum line length of 65 characters. USIA will transmit these files electronically to USIS posts overseas for their review, with the goal of reducing the time it takes to get posts' comments for the Agency's grants review process.

SUPPLEMENTARY INFORMATION: Pursuant to the Bureau's authorizing legislation, programs must maintain a non-political character and should be balanced and representative of the diversity of American political, social, and cultural life. ''Diversity'' should be interpreted

in the broadest sense and encompass differences including but not limited to ethnicity, gender, religion, geographic location, socio-economic status, and physical challenges. Applicants are strongly encouraged to adhere to the advancement of this principle both in program administration and in program content. Please refer to the review criteria under the ''Support for Diversity'' section for specific suggestions on incorporating diversity into the total proposal.

Overview

The Office of Citizen Exchanges works with U.S. private sector, non-profit organizations on cooperative international group projects that introduce American and foreign participants to each others' social, economic, and political structures, and international interests. The Office supports international projects in the United States or overseas involving leaders or potential leaders in the following fields and professions: urban planners, jurists, specialized journalists (specialists in economics, business, political analysis, international affairs), business professionals, NGO leaders, environmental specialists, parliamentarians, educators, economists, and other government officials.

Guidelines

Applicants should carefully note the following restrictions/recommendations for proposals in specific geographical areas:

Central and Eastern Europe (CEE) and the Newly Independent States (NIS): Requests for proposals involving the following countries will be announced in separate competitions: CEE—Albania, Bosnia-Herzegovina, Bulgaria, Croatia, Czech Republic, Estonia, Hungary, Latvia, Lithuania, Macedonia, Poland, Romania, Slovak Republic, and Slovenia; NIS—Armenia, Azerbaijan, Belarus, Georgia, Kazakhstan, Kyrgyzstan, Moldova, Russia, Tajikistan, Turkmenistan, Ukraine, and Uzbekistan. Proposals involving these regions WILL NOT be accepted under this competition.

Western Europe and Canada (WEU): Priority consideration will be given to the following themes and target countries/subregions:

(1) Conflict Resolution: Northern Ireland

Theme: Facilitation of grass-roots conflict resolution relating to both Northern Ireland and cross-border issues between communities in Northern Ireland and the Republic of Ireland.

(2) Conflict Resolution: Cyprus

Theme: Conflict resolution through increased inter-communal communication by means of Internet access and computer-assisted negotiations, aimed at journalists, academics, politicians, and government officials in both the Greek Cypriot and Turkish Cypriot communities.

Project: In order to improve their professional skills, increase access to research materials and international news sources, and to stimulate inter-communal communication via Internet, journalists, academics as well as politicians and government officials need to be able to access information electronically. The project would include a seminar and workshop on each side of the green line as well as technical help to set up viable systems of electronic communication.

Exchange: American experts in Internet access and conflict resolution to set up seminars/workshops in the Greek Cypriot and Turkish Cypriot communities and to ensure viability in those communities and to ensure viability in those communities of electronic communication.

(3) Promoting a Civil Society: Italy

Theme: In helping to develop a new ''civic consciousness'' and to form a greater partnership in Italy between the public and private sectors, the project would study the American model of volunteerism, training, and civic service.

Project: A two-way exchange program involving Italian representatives from the Ministry of Social Services, selected regions and municipalities and non-governmental organizations, and American representatives from Federal and state organizations involved in civic service programs.

Exchange: Phase I of the program would involve a small group of Italians visiting the U.S. to learn about the American model of civic/volunteer service. Issues to be addressed would include: organizational structure/administration of civic service programs; fund-raising, including administration of federal funding; evaluation and control criteria; training; cultural/social context in which programs thrive.

Phase II would involve visits to Italy by American representatives of selected civic services programs relevant to the Italian experience. These representatives would work directly with the Ministry of Social Services and regional projects to develop Italian pilot projects based on the American model.

(4) Local Government: Turkey

Theme: To study the issues involved in decentralization in order to promote regional development and citizen empowerment.

Project: An exchange of 10 mayors from Southeastern Turkey, the site of a new and massive irrigation project, with U.S. municipal leaders involved in regional development issues.

Exchange: Initial visit to selected American cities, with a focus on regional development and provision of local services. Follow-up visit by American representatives relevant to the Turkish experience.

(5) Wetlands Management Program: Greece

Theme: Wetlands management, mapping, and restoration program.

Project: To assist Aristotle University in Thessaloniki and the Greek Wetlands Center in establishing a program of general wetlands managements, including the technical aspects of conservation, legal issues, and public relations techniques.

Exchange: Two-way exchange of experts: Americans to help the Center and University establish a Wetlands program; Greeks to visit the U.S. for first-hand observation of NGO work and university programs.

E/P contact for WEU programs: Chris Miner, 202/401–7342; E-Mail {CMiner@USIA.GOV}

East Asia and the Pacific (EA): Priority consideration will be given to the following themes and target countries/subregions:

The Organization of NGOs

(EA regional project or single country project for Japan)—Projects should address the important role that non-governmental organizations, citizen's groups and grassroot institutions play in a democracy. Priority will be given to projects that study management and fund-raising strategies of NGOs in the U.S., rather than projects that focus exclusively on the objectives or themes of specific organizations.

Economic Development and Intellectual Property Rights

(EA regional project to include participants from South Korea, Taiwan, Hong Kong, Vietnam, Thailand, Malaysia, Singapore, Indonesia and/or the Philippines)—Projects should underscore the importance of IPR protection to economic development. Participants would include business reporters, executives in the private and public sector with an interest in IPR and/or legal experts.

Intellectual Property Rights

(China)—Projects would show members of China's business creative community how their U.S. counterparts protect their own intellectual property rights.

Rule of Law

(China) Projects would help Chinese provincial and municipal judges understand how U.S. state judiciaries function to understand how Federal and state judiciary systems interact.

Market Economics

(Vietnam, Cambodia, and/or Laos)—Projects would give a better understanding of market economics and international trade to executives from the state and private sector. Priority will be given to projects that reach a wider audience through use of workshops, training seminars or follow-up publications for entry-level entrepreneurs.

The Sustainable Urban Environment

(EA regional project)—Projects should explore the challenge of balancing economic growth with environmental health in large cities. Participants would include city managers, government officials, NGO activists, academics or journalists with an interest in urban planning. The project should not only look at the experiences of U.S. cities coping with rapid growth, but also address the role of citizen participation in identifying creative solutions or finding acceptable compromises.

E/P contact for EA programs: Steve Koenig 202/260–5485; E-Mail {SKoenig@USIA.GOV}

American Republics (AR): Priority will be given to projects in (1) Civic education (which might focus on such issues as curriculum development, civic journalism, citizen activism, and volunteerism); (2) sustainable development; (3) rule of law/administration of justice; and (4) diversity in the Americas experience (African and other ethnic/racial aspects of culture shared in the Western Hemisphere). Projects should involve either Brazil, or one more of the following countries. Argentina, Dominican Republic, Panama, Uruguay, Venezuela. Projects should include collaborative programming with non-governmental organizations (NGOs) in these countries.

E/P contact for AR programs: Laverne Johnson, 202/619–5337; E-Mail {LJohnson@USIA.GOV}

Africa (AF): Preference will be given to proposals focusing on international trade and privatization issues—including Intellectual Property Rights (IPR), World Trade Organization (WTO), and regional arrangements such as the North American Free Trade Agreement (NAFTA)—with the Southern African Development Community (SADC); rule of law, alternate dispute resolution, or judicial reform in one subregion; and civic education/civil society (especially the role of elections, or promotion of citizen participation, human rights, or values of tolerance, pragmatism, cooperation, and compromise). The Office is also interested in proposals for electronic connectivity, but USIA funds may not be used for purchase of equipment. These proposals should target organizations responsible for promoting either rule of law or trade and business development and must demonstrate commitment to use and capacity to maintain equipment. All proposals should include programming in at least three countries. Other themes may be proposed, but those listed above will receive preference.

E/P contact for AF programs: Stephen Taylor, 202/205–0535; E-Mail {STaylor@USIA.GOV}

North Africa, Near East and South Asia (NEA): Priority will be given to regional or single-country exchange projects that focus on conflict resolution, domestic or international; rule of law, focusing on legal system reform or the introduction of alternative dispute management into the adjudication process; the promotion of civil society/democratic government, which might include the enhancement of formal civic education, parliamentary or civil service development, or the development of greater competence/professionalism/responsibility among journalists; human rights, including the empowerment of women and/or the protection of children and ethnic minorities; education development, including curricular reform; teacher training; development of skills and professionalism among administrators; and natural resource (environmental) awareness and management, including water resource management, the establishment of formal and informal education projects focused on the environment, and increasing public awareness of the impact of environmental degradation on the quality of life.

E/P contact for NEA programs: Tom Johnston, 202/619–5325; E-Mail {TJohnston@USIA.GOV}

The Office of Citizen Exchanges strongly encourages the coordination of activities with respected universities, professional associations, and major cultural institutions in the U.S. and abroad, but particularly in the U.S. Projects should be intellectual and cultural, not technical. Vocational training (an occupation other than one requiring a baccalaureate or higher academic degree; i.e., clerical work, auto maintenance, etc., and other occupations requiring less than two years of higher education) and technical training (special and practical knowledge of a mechanical or a scientific subject which enhances mechanical, narrowly scientific, or semi-skilled capabilities) are ineligible for support. In addition, scholarship programs are ineligible for support. The Office does not support proposals limited to conferences or seminars (i.e., one to fourteen-day programs with plenary sessions, main speakers, panels, and a passive audience). It will support conferences only insofar as they are part of a larger project in duration and scope which is receiving USIA funding from this competition. USIA-supported projects may include internships; study tours; short-term, non-technical training; and extended, intensive workshops taking place in the United States or overseas. The themes addressed in exchange programs must be of long-term importance rather than focused exclusively on current events or short-term issues. In every case, a substantial rationale must be presented as part of the proposal, one that clearly indicates the distinctive and important contribution of the overall project, including, where applicable, the expected yield of any associated conference. No funding is available exclusively to send U.S. citizens to conferences or conference-type seminars overseas; nor is funding available for bringing foreign nationals to conferences or to routine professional association meetings in the United States. Projects that duplicate what is routinely carried out by private sector and/or public sector operations will not be considered. The Office of Citizen Exchanges strongly recommends that applicants consult with host country USIS posts *prior* to submitting proposals.

Selection of Participants

All grant proposals should clearly describe the type of persons who will participate in the program as well as the process by which participants will be selected. It is recommended that programs in support of U.S. internships include letters tentatively committing host institutions to support the internships. In the selection of foreign participants, USIA and USIS posts abroad retain the right to nominate all participants and to accept or deny participants recommended by grantee institutions. However, grantee

institutions are often asked by USIA to suggest names of potential participants. The grantee institution will also provide the names of American participants and brief (two pages) biographical data on each American participant to the Office of Citizen Exchanges for information purposes. Priority will be given to foreign participants who have not previously travelled to the United States.

Additional Guidance

The Office of Citizen Exchanges offers the following additional guidance to prospective applicants:

1. The Office of Citizen Exchanges encourages project proposals involving more than one country. Pertinent rationale which links countries in multi-country projects should be included in the submissions. Single-country projects that are clearly defined and possess the potential for creating and strengthening continuing linkages between foreign and U.S. institutions are also welcome.

2. Proposals for bilateral programs are subject to review and comment by the USIS post in the relevant country, and pre-selected participants will also be subject to USIS post review.

3. Bilateral programs should clearly identify the counterpart organization and provide evidence of the organization's participation.

4. The Office of Citizen Exchanges will consider proposals for activities which take place exclusively in other countries when USIS posts are consulted in the design of the proposed program and in the choice of the most suitable venues for such programs.

5. Office of Citizen Exchanges grants are not given to support projects whose focus is limited to technical or vocational subjects, or for research projects, for publications funding, for student and/or teacher/faculty exchanges, for sports and/or sports related programs. Nor does this office provide scholarships or support for long-term (a semester or more) academic studies. Competitions sponsored by other Bureau offices are also announced in the Federal Register.

For projects that would begin after December 31, 1997, competition details will be announced in the Federal Register on or about June 1, 1997. Inquiries concerning technical requirements are welcome prior to submission of applications.

Funding

Although no set funding limit exists, proposals for less than $135,000 will receive preference. Organizations with less than four years of successful experience in managing international exchange programs are limited to $60,000. Applicants are invited to provide both an all-inclusive budget as well as separate sub-budgets for each program component, phase, location, or activity in order to facilitate USIA decisions on funding. While an all-inclusive budget must be provided with each proposal, separate component budgets are optional. Competition for USIA funding support is keen.

The selection of grantee institutions will depend on program substance, cross-cultural sensitivity, and ability to carry out the program successfully. Since USIA grant assistance constitutes only a portion of total project funding, proposals should list and provide evidence of other anticipated sources of financial and in-kind support. Proposals with substantial private sector support from foundations, corporations, other institutions, et al. will be deemed highly competitive. The Recipient must provide a minimum of 33 percent cost sharing of the total project cost.

The following project costs are eligible for consideration for funding:

1. International and domestic air fares; visas; transit costs; ground transportation costs.

2. Per Diem: For the U.S. program, organizations have the option of using a flat $140/day for program participants or the published U.S. Federal per diem rates for individual American cities. For activities outside the U.S., the published Federal per diem rates must be used.

Note. U.S. escorting staff must use the published Federal per diem rates, not the flat rate.

3. Interpreters: If needed, interpreters for the U.S. program are provided by the U.S. State Department Language Services Division. Typically, a pair of simultaneous interpreters is provided for every four visitors who need interpretation. USIA grants do not pay for foreign interpreters to accompany delegations from their home country. Grant proposal budgets should contain a flat $140/day per diem for each Department of State interpreter, as well as home-program-home air transportation of $400 per interpreter plus any U.S. travel expenses during the program. Salary expenses are covered centrally and should not be part of an applicant's proposed budget.

4. Book and Cultural Allowance: Participants are entitled to and escorts are reimbursed a one-time cultural allowance of $150 per person, plus a participant book allowance of $50. U.S. staff do not get these benefits.

5. Consultants: May be used to provide specialized expertise or to make presentations. Daily honoraria generally do not exceed $250 per day. Subcontracting organizations may also be used, in which case the written agreement between the prospective grantee and subcontractor should be included in the proposal.

6. Room rental, which generally should not exceed $250 per day.

7. Materials Development: Proposals may contain costs to purchase, develop, and translate materials for participants.

8. One working meal per project. Per capita costs may not exceed $5–8 for a lunch and $14–20 for a dinner, excluding room rental. The number of invited guests may not exceed participants by more than a factor of two-to-one.

9. A return travel allowance of $70 for each participant which is to be used for incidental expenditures incurred during international travel.

10. All USIA-funded delegates will be covered under the terms of a USIA-sponsored health insurance policy. The premium is paid by USIA directly to the insurance company.

11. Other costs necessary for the effective administration of the program, including salaries for grant organization employees, benefits, and other direct and indirect costs per detailed instructions in the application package.

Note: The 20 percent limitation of ''administrative costs'' included in previous announcements does not apply to this RFP. Please refer to the Application Package for complete budget guidelines.

Review Process

USIA will acknowledge receipt of all proposals and will review them for technical eligibility. Proposals will be deemed ineligible if they do not fully adhere to the guidelines established herein and in the Application Packet. Eligible proposals will be forwarded to panels of USIA officers for advisory review. All eligible proposals will also be reviewed by the program office, as well the USIA geographic regional office and the USIS post overseas, where appropriate. Proposals may also be reviewed by the USIA's Office of General Counsel or by other Agency elements. Funding decisions are at the discretion of the USIA Associate Director for Educational and Cultural Affairs. Final technical authority for assistance awards (grants or cooperative agreements) resides with USIA's grants officer.

Review Criteria

USIA will consider proposals based on their conformance with the objectives and considerations already stated in this RFP, as well as the following criteria:

1. Quality of Program Idea: Proposals should exhibit originality, substance, precision, and relevance to the Agency mission.

2. Program Planning: Detailed agenda and relevant work plan should demonstrate substantive undertakings and logistical capacity. Agenda and plan should adhere to the program overview and guidelines described above.

3. Ability to Achieve Program Objectives: Objectives should be reasonable, feasible, and flexible. Proposals should clearly demonstrate how the institution will meet the program objectives and plan.

4. Multiplier Effect: Proposed programs should strengthen long-term mutual understanding, including maximum sharing of information and establishment of long-term institutional individual linkages.

5. Value to U.S.-Partner Country Relations: Proposed projects should receive positive assessments by USIA's geographic area desk and overseas officers of program need, potential impact, and significance in the partner country(ies).

6. Institutional Capacity: Proposed personnel and institutional resources should be adequate and appropriate to achieve the program's or project's goal.

7. Institution Reputation/Ability: Proposals should demonstrate an institutional record of successful exchange programs, including responsible fiscal management and full compliance with all reporting requirements for past Agency grants as determined by USIA's Office of Contracts. The Agency will consider the past performance of prior recipients and the demonstrated potential of new applicants.

8. Follow-on Activities: Proposals should provide a plan for continued follow-on activity (without USIA support) which ensures that USIA-supported programs are not isolated events.

9. Evaluation Plan: Proposals should provide a plan for a thorough and objective evaluation of the program/project by the grantee institution.

10. Cost-Effectiveness: The overhead and administrative components of the proposal, including salaries and honoraria, should be kept as low as possible. All other items should be necessary and appropriate.

11. Cost-Sharing: Proposals should maximize cost-sharing through other private sector support as well as institutional direct funding contributions.

12. Support of Diversity: Proposals should demonstrate the substantive support of the Bureau's policy on diversity. Achievable and relevant features should be cited in both program administration (selection of participants, program venue, and program evaluation) and program content (orientation and wrap-up sessions, program meetings, resource materials, and follow-up activities).

Notice

The terms and conditions published in this RFP are binding and may not be modified by any USIA representative. Explanatory information provided by USIA that contradicts published language will not be binding. Issuance of the RFP does not constitute an award commitment on the part of the Government. The Agency reserves the right to reduce, revise, or increase proposal budgets in accordance with the need of the program and the availability of funds.

Notification

Final awards cannot be made until funds have been fully appropriated by the Congress, allocated, and committed through internal USIA procedures. Awarded grants will be subject to periodic reporting and evaluation requirements.

Dated: June 20, 1996.

Dell Pendergrast,

Deputy Associated Director for Educational and Cultural Affairs.

[FR Doc. 96–16325 Filed 6–26–96; 8:45 am]

BILLING CODE 8230–01–M

federal register

Thursday
June 27, 1996

Part II

Environmental Protection Agency

40 CFR Part 372

Addition of Facilities in Certain Industry Sectors; Toxic Chemical Release Reporting; Community Right-to-Know; Proposed Rule

Emergency Planning and Community Right-to-Know; Notice of Public Meeting; Notice

ENVIRONMENTAL PROTECTION AGENCY

40 CFR Part 372

[OPPTS–400104; FRL–5379–3]

RIN 2070–AC71

Addition of Facilities in Certain Industry Sectors; Toxic Chemical Release Reporting; Community Right-to-Know

AGENCY: Environmental Protection Agency (EPA).

ACTION: Proposed rule.

SUMMARY: EPA is proposing to add seven industry groups to the list of industry groups subject to the reporting requirements under section 313 of the Emergency Planning and Community Right-to-Know Act of 1986 (EPCRA) and section 6607 of the Pollution Prevention Act of 1990 (PPA). These industry groups are metal mining, coal mining, electric utilities, commercial hazardous waste treatment, chemicals and allied products-wholesale, petroleum bulk stations-wholesale, and solvent recovery services. EPA believes that the addition of these industry groups to EPCRA section 313 will significantly add to the public's right-to-know about releases and other waste management activities of toxic chemicals in their communities. EPA believes that these industry groups meet the criteria of EPCRA section 313(b)(1)(B). Reporting for these sectors will be required for the first full year following publication of the final rule.

DATES: Written comments on this proposed rule must be received on or before August 26, 1996.

ADDRESSES: Written comments should be submitted in triplicate to: OPPT Docket Clerk, TSCA Document Receipt Office (7407), Office of Pollution Prevention and Toxics, Environmental Protection Agency, Rm. E-G099, 401 M St., SW., Washington, DC 20460. Comments containing information claimed as confidential must be clearly marked as confidential business information (CBI). If CBI is claimed, three additional sanitized copies must also be submitted. Nonconfidential versions of comments on this proposed rule will be placed in the rulemaking record and will be available for public inspection. Comments should include the docket control number for this proposal, OPPTS–400104 and the EPA contact for this proposal. Unit VII. of this preamble contains additional information on submitting comments containing information claimed as CBI.

Comments and data may also be submitted electronically by sending electronic mail (e-mail) to: oppt.ncic@epamail.epa.gov. Electronic comments must be submitted as an ASCII file avoiding the use of special characters and any form of encryption. Comments and data will also be accepted on disks in WordPerfect 5.1 file format or ASCII file format. All comments and data in electronic form must be identified by the docket number OPPTS–400104. No CBI should be submitted through e-mail. Electronic comments on this proposed rule may be filed online at many Federal Depository Libraries. Additional information on electronic submissions can be found in Unit VII. of this document.

FOR FURTHER INFORMATION CONTACT: Tim Crawford at 202-260-1715, e-mail: crawford.tim@epamail.epa.gov or Brian Symmes at 202-260-9121, e-mail: symmes.brian@epamail.epa.gov for specific information regarding this proposed rule. For further information on EPCRA section 313, contact the Emergency Planning and Community Right-to-Know Hotline, Environmental Protection Agency, Mail Stop 5101, 401 M St., SW., Washington, DC 20460, Toll free: 1-800-535-0202, in Virginia and Alaska: 703-412-9877 or Toll free TDD: 800-553-7672.

SUPPLEMENTARY INFORMATION:

I. Introduction

A. Regulated Entities

Entities potentially regulated by this proposed action are those facilities within the industry groups being proposed for addition to the list of Standard Industrial Classification (SIC) codes which manufacture, process, or otherwise use chemicals listed at 40 CFR 372.65 and meet the reporting requirements of section 313 of the Emergency Planning and Community Right-to-Know Act of 1986 (EPCRA), 42 U.S.C. 11023 and section 6607 of the Pollution Prevention Act of 1990 (PPA), 42 U.S.C. 13106. Some of the potentially regulated categories and entities include:

Category	Examples of regulated entities
Industry; facilities that manufacture, process, or otherwise use certain chemicals.	Metal mining, Coal mining, Electric utilities, Commercial hazardous waste treatment, Chemicals and allied products-wholesale, Petroleum bulk stations-wholesale, Solvent recovery services, Manufacturing.

This table is not intended to be exhaustive, but rather provides a guide for readers regarding entities likely to be regulated by this proposed action. This table lists the types of entities that EPA is now aware could potentially be regulated by this proposed action. Other types of entities not listed in the table could also be regulated. To determine whether your facility would be regulated by this action, you should carefully examine this proposal and the applicability criteria in part 372 subpart B of Title 40 of the Code of Federal Regulations.

B. Statutory Authority

This proposed rule is issued under sections 313(b) and 328 of EPCRA, 42 U.S.C. 11023 *et seq*. EPCRA is also referred to as Title III of the Superfund Amendments and Reauthorization Act of 1986 (SARA) (Pub. L . 99-499).

C. Background

Section 313 of EPCRA requires certain facilities manufacturing, processing, or otherwise using listed toxic chemicals to report their environmental releases of such chemicals annually. Beginning with the 1991 reporting year, such facilities also must report source reduction and recycling data for such chemicals, pursuant to section 6607 of the PPA, 42 U.S.C. 13106. Section 313(b)(1)(A) specifically applied these reporting requirements to owners and operators of facilities that have 10 or more full time employees and that are in Standard Industrial Classification (SIC) codes 20 through 39. EPCRA section 313(b) authorizes EPA to add facilities and industry groups to the EPCRA section 313 list. The purpose of this proposed rule is to expand the universe of industry groups that are subject to EPCRA section 313 and PPA section 6607.

II. Preparation for Expansion of Section 313 Industry Groups

A. General Background

In 1986, Congress enacted EPCRA to ensure that the presence, management, and routine and emergency releases of toxic chemicals in the United States were well understood. It was evident that there were facilities in the United States where toxic chemicals were manufactured, used and stored—but knowledge of this was undisclosed to emergency response teams, state and local governments, and perhaps most importantly, the citizens who lived and shared common neighborhoods with these facilities.

At the core of these new provisions was the concept of a facility-specific, chemical-based inventory. This inventory, termed the Toxics Release Inventory (TRI), created a national data base identifying facilities and their annual accidental and routine releases of toxic chemicals. Prior to EPCRA, this information was not readily available to the federal government, state governments, emergency preparedness teams or the general public, and often did not become available until *after* serious accidents occurred or until major impacts on human health and the environment were evident. This ''after-the-fact'' disclosure of information did little to help plan or prevent such serious health and environmental impacts.

EPCRA section 313 currently requires certain manufacturing facilities in SIC codes 20 through 39 to report annually on their releases, transfers, and other waste management practices for more than 600 listed toxic chemicals and chemical categories (hereafter ''toxic chemicals''). Information on the release (including disposal), transfer, and other waste management activities of these chemicals, which is provided to EPA and States, is then made publicly available through a variety of means, including an annual report issued by EPA.

The data that EPA receives from these approximately 23,000 facilities have provided the public, industry, and all levels of government with critical information related to toxic chemical releases and transfers that occur within their communities and across the United States. These data have become an essential component of facility planning and community preparedness and response. Further, these data allow States, communities and the public to engage in an informed way in environmental decision making. The TRI data are a yardstick by which progress can be measured by industry and local communities and governments. These data enable all interested parties to establish credible baselines, to set realistic goals for environmental progress, and to measure progress in meeting these goals over time.

Data about releases and other waste management activities of toxic chemicals at the community level were generally nonexistent prior to EPCRA. While permit data are generally cited as a public source of environmental data, they are often difficult to obtain, are not cross-media and present only a limited perspective on the facility's overall performance. While other sources of data are often cited as substitutes for TRI data, EPA is unaware of any other publicly available, nationwide data base that provides multi-media, facility-specific release and waste information to the public. With EPCRA, and the real gains in understanding it has produced, communities now know what a subset of industrial facilities in their area release or otherwise manage as waste for listed toxic chemicals.

EPCRA section 313 facility coverage is currently limited to facilities in the manufacturing sector, i.e., in SIC codes 20 through 39. These manufacturing facilities account for only a small portion of the toxic chemicals released or handled as waste in the United States. Facilities currently covered by EPCRA section 313 account for only 0.4 percent of the facilities in the United States (Ref. 14). In 1989, the Office of Technology Assessment estimated that the TRI represents 5 percent of toxic releases to the environment. Adding non-manufacturing industries to the EPCRA section 313 list of facilities will provide basic information to millions of Americans on releases and other waste management information on toxic chemicals from additional industrial facilities in their communities.

As discussed in detail in Unit III.A. of this preamble, Congress gave EPA clear authority to expand TRI, both in terms of the chemicals reported and the facilities required to report. The limited list of chemicals and facilities identified in the original legislation was meant as a starting point, or a core program. Congress recognized that the TRI program would need to evolve to meet the needs of a better informed public and to fill information gaps that would become apparent over time.

In implementing the expansion of the TRI program, EPA is pursuing the course set by Congress. The information EPA is seeking to provide the public through this proposal currently is largely unavailable. While many non-manufacturing facilities may be subject to various reporting requirements at the Federal, State, and local levels, these reporting systems are not comparable to TRI. These systems, which were reviewed as part of the analysis for this proposal, have been found to be limited in scope, content, coverage, and accessibility compared to TRI. Many do not focus on the collection and dissemination of information but are used to support other regulatory activities, such as the issuance of permits. While other reporting systems may serve their statutorily mandated purposes, none provide accessible data on releases to all media from such a large number of facilities. Therefore, these existing data systems, which may serve other useful purposes, do not provide as useful information for communities on toxic chemicals as TRI does. Moreover, duplication between TRI data and data contained in other systems is minimal, data contained in those other systems often reflect permitted releases rather than actual releases, and these data may represent wastestream level data rather than the chemical-specific data that comprises TRI.

In a critical analysis of the TRI program, the Congressional General Accounting Office (GAO) in 1991 noted that EPA had not used its statutory authority to expand the types of facilities required to report under EPCRA section 313. GAO recognized that the value of the TRI program could be enhanced significantly by expanding the program's reporting requirements to cover industries outside the manufacturing sector, and noted that industry group expansion is supported by a variety of stakeholders. More discussion of the GAO's report, entitled *Toxic Chemicals: EPA's Toxic Release Inventory Is Useful But Can Be Improved* (hereafter GAO Report), can be found in Unit III.A. of this preamble (Ref. 2).

EPA has undertaken a number of actions to expand and enhance TRI. These actions include expanding the number of reportable toxic chemicals by adding 286 toxic chemicals and chemical categories to the EPCRA section 313 list in 1994. At the same time, EPA sought to reduce burden for facilities with low annual reportable amounts of toxic chemicals by establishing an alternate reporting threshold that allows facilities with 500 pounds or less of reportable releases and other wastes to file a certification statement instead of the standard TRI report, the Form R. Further, a new category of facilities was added to TRI on August 3, 1993 through Executive Order 12856, which requires Federal

facilities meeting threshold requirements to file annual TRI reports, regardless of SIC code.

EPA first announced its intention to consider the expansion of TRI to include additional industry groups at a public meeting held on May 29, 1992 (57 FR 19126). Today's proposal to expand the coverage of TRI to include additional industry groups has been undertaken in order to provide new and valuable information on toxic chemicals in the U.S. The proposed industry groups are responsible for substantial use, release and generation of EPCRA section 313 chemicals as waste, and are engaged in activities similar to or related to activities conducted at facilities within the manufacturing sector that currently reports. This action is proposed in order to more completely account for releases, transfers, and waste management in the U.S., and to provide the public, all levels of government, and the regulated community with information that will improve decision making, measurement of pollution, and the understanding of the environmental consequences of toxic chemical emissions.

On August 8, 1995, the President issued a directive to EPA for ''continuation on an expedited basis of the public notice and comment rulemaking proceedings to consider whether, as appropriate and consistent with section 313(b) of EPCRA, 42 U.S.C. 11023(b), to add to the list of Standard Industrial Classification (''SIC'') Code designations of 20 through 39 (as in effect on July 1, 1985)'' (60 FR 41791). The President directed that EPA ''complete the rulemaking process on an accelerated schedule.'' EPA is now proposing a number of carefully selected industry segments for coverage under EPCRA section 313. Although EPA may be ''expediting'' this activity, it is doing so only after lengthy deliberations and consultation with stakeholders.

EPA recognizes that expansion of TRI reporting to cover a broader range of facilities raises some communication issues that may not be presented by the original list of manufacturing facilities in SIC codes 20 through 39. For example, inclusion of certain waste management facilities as proposed could mean that a facility's primary business could equate to a reportable release. As discussed in Unit V.F.6. of this preamble, this could lead to the misperception that an uncontrolled release is taking place, when in reality the facility is legally and responsibly managing waste materials. This type of misperception is not a result intended or desired by EPA. Similarly, a concern has been expressed by some that because waste management activities may involve transfers from one facility to another that the same material may appear more than once in the TRI data base. EPA believes that, since transfers and releases are tracked separately, this should not mislead the public, but seeks comment on the issue. As this rulemaking proceeds, EPA will be evaluating how it presents--including in its annual data release--and otherwise communicates the information reported by these new facilities. When considering this proposed rule, commenters are encouraged to address how best to communicate information from the new industries in a way that continues to serve the purposes of TRI without fostering misperceptions.

B. Outreach

Prior to this proposed rulemaking, EPA engaged in a significant and comprehensive outreach effort. This outreach served to inform interested parties, including industries under consideration, state regulatory officials, environmental organizations, labor unions, community groups, and the public of EPA's intention to propose adding additional industry groups to the EPCRA section 313 list. The outreach effort also allowed EPA to gather additional information that assisted in the development of this proposed rulemaking. EPA has also received substantial public comment regarding the Agency's proposed action, and has considered these comments in its deliberations.

EPA recognized the need for comprehensive and thorough outreach regarding this proposal. Consequently, EPA held two public meetings prior to publication of this proposal. The first public meeting, announcing EPA's intentions, was held on May 29, 1992. The second was held on May 25, 1995. These meetings were announced in the Federal Register (57 FR 19126, May 4, 1992 and 60 FR 21190, May 1, 1995). The public meetings allowed interested parties, including representatives of the industries included in this proposal, to voice opinions and concerns regarding the facility expansion undertaking. EPA used these meetings as an opportunity to inform interested parties about the possibility of this proposed action and to make available information regarding its analysis for comment. Issues papers, summaries, statements submitted and additional public comments from these meetings, are included in the public docket supporting this rulemaking.

In addition, over the course of the past 5 years, EPA has used the regularly-held public meetings of the Forum on State and Tribal Toxicities Action (FOSTTA), which represents state environmental agencies, and the National Advisory Council on Environmental Policy and Technology (NACEPT), which includes representatives from industry, environmental organizations, states, and academia, to discuss the expansion of the EPCRA section 313 industry group list. These groups have provided EPA with substantive input prior to this proposal for structuring its screening and analytical activities conducted in support of this proposal. EPA has recently held discussions with other state regulatory officials, in particular with the Interstate Mining Compact Commission (IMCC). These discussions have allowed EPA to understand more clearly state regulatory concerns regarding the addition of certain industry groups. With the publication of this proposal, EPA will be continuing the dialogue initiated in these meetings.

EPA also recognized that public meetings were not the sole means to engage in the substantive discussion of issues specific to the proposed industries. Therefore, EPA initiated a series of formal and informal meetings with industry representatives as well as with representatives of environmental, community and labor organizations. Although meetings with such groups have been held since 1992, EPA substantially increased this element of its outreach effort since 1994, and continued to do so until the publication of this proposal. The more formal of these meetings, referred to as ''focus group meetings,'' involved representatives of various trade associations and companies from the various industry groups under consideration. These meetings primarily involved discussions with EPA officials regarding the expansion of EPCRA section 313 reporting requirements as well as issues specific to the industries under consideration. A ''focus group meeting'' was also held with environmental, labor and community organizations. EPA also used these meetings as an opportunity to share data and additional information collected as part of its expansion effort, and to solicit comment regarding the analytic approach used in the screening process (A description of the screening process is provided in Unit II.C. and II.D of this preamble). Summaries of these meetings and lists of participants are available in the public docket supporting this rulemaking.

EPA officials have also held meetings with industry representatives and others on a regular basis to discuss issues involved in this proposed rulemaking.

EPA has used these meetings as a means to keep interested parties closely informed of progress in developing this proposed action, and to gather information to assist the Agency in its activities. These meetings are documented in the public docket supporting this rulemaking.

EPA and other government officials have routinely discussed this proposed action in public speaking engagements before a variety of groups and organizations. Most notably, the President addressed community groups in Baltimore, Maryland on August 8, 1995, regarding the Administration's commitment to community right-to-know, including his directive to the Administrator of EPA and Heads of Executive Departments and Agencies to continue the expansion of the EPCRA section 313 industry group list. The President's statements concerning the expansion of the TRI program were widely reported and increased public awareness of EPA's efforts. Considerable media coverage, including detailed trade press stories, has provided many more individuals, businesses, and organizations with information regarding this proposed action.

Unfunded mandates that may be imposed on other government entities are of particular concern to the Agency, especially since issuance of Executive Order 12875 (''Enhancing the Intergovernmental Partnership'') and the Unfunded Mandates Reform Act of 1995 (compliance with this Act is discussed in Unit XI.D. of this preamble). EPA has held discussions with a wide range of state and local officials regarding this proposal, particularly through FOSTTA as described above, and with representatives of publicly-owned and operated facilities. EPA will continue a constructive dialogue to ensure that unfunded mandates issues are fully understood, analyzed, and addressed.

EPA recognizes that particular concerns have been raised regarding the expansion of the EPCRA section 313 industry group list in so far as the reporting requirements may affect small businesses. Many trade associations and other industry organizations with which EPA has held discussions include small businesses as members or participants. These groups have represented the interests of some small businesses to EPA, and have helped to inform businesses about EPA's intentions. In addition, EPA has addressed forums such as the Small Business Roundtable regarding this proposed action, and has briefed officials of the Small Business Administration as well as EPA's Small Business Omsbudsman and Regional Small Business Liaisons on this matter. Activities specific to small businesses are documented in the public docket supporting this rulemaking.

A variety of materials have been made available to interested parties and the public regarding this proposed action. Widely distributed Agency publications have provided updates regarding the expansion of the TRI program. More specific materials, including analytical products developed as part of this effort, have been provided to industry groups and further disseminated at events such as annual meetings. EPA is also aware of and appreciates the many industry efforts to disseminate this information to members. Documentation of these publications and materials, to the extent available, is included in the public docket supporting this rulemaking.

EPA intends to continue its outreach efforts in regards to this proposed action. The Agency has found outreach to be beneficial to all parties and essential to sound public policy decisions. The Agency will be providing additional forums for public comment by holding two public meetings during the public comment period for this proposal.

C. Development of Industry Group Candidates

Prior to this proposed rulemaking, EPA conducted a screening process designed to identify the best candidate industry groups in order to focus on those industries potentially most relevant to further the purposes of EPCRA section 313. The purpose of the screening process was to focus the Agency's limited resources on those industries for which reporting would be most beneficial to community right-to-know. Provided below is a brief overview of the screening activities conducted by EPA prior to this rulemaking. For a more detailed discussion of the screening activities, refer to *Development of SIC Code Candidates: Screening Document*, available in the public docket for this rulemaking (Ref. 19).

EPA began the screening process by analyzing chemical waste information routinely reported by industries and collected in several existing EPA data systems. While the information reported in these data systems have some inconsistencies with the type of information collected on TRI, the data systems selected provided a reasonable method of comparing industries by chemicals and estimated volumes for industries regulated under each program (Ref. 5).

The initial screening activity ranked industries by the volume of EPCRA section 313 chemicals found in each reporting system. Those 2-digit SIC codes that made up 99 percent of the matched EPCRA section 313 chemical release estimates for non-manufacturing facilities were selected from each reporting system. This list of 25 2-digit SIC codes was referred to as the ''Tier I'' list, and included the following Major Groups: Metal Mining; Coal Mining; Oil and Gas Exploration and Production; Non-metal Mining; Heavy Construction; Railroad Transportation; Motor Freight Transportation and Warehousing; Transportation by Air; Pipelines, Except Natural Gas; Transportation Services; Electric, Gas, and Sanitary Services; Wholesale Trade Durable Goods; Wholesale Trade Nondurable Goods; Automotive Dealers and Gasoline Service Stations; Business Services; Automotive Repair, Service, and Parking; Miscellaneous Repair and Service; Health Services; Educational Services; Engineering, Research, Management, and Related Services; Services not elsewhere classified; Administration of Environmental Quality and Housing Programs; Administration of Economic Services; National Security and International Affairs; and Nonclassifiable Establishments.

The Tier I list represents an extremely large number of diverse individual industries. EPA began compiling information useful in explaining what the industries in these Major Groups are and what activities they conduct with emphasis on those activities that may involve section 313 chemicals. This information was organized into documents for each 2-digit SIC code and are referred to as ''industry profiles'' (Refs. 6, 7, 8, 9, and 10).

The next step in the screening process involved a comparison between industry groups currently reporting under section 313 (manufacturing industries) and those under consideration, in terms of the types of activities they perform and the services they provide to the manufacturing sector. One of the primary objectives of expanding TRI coverage to additional industry groups is to fill in gaps associated with chemical management activities currently reported under EPCRA section 313. EPA determined that those industries that either supply or otherwise manage chemicals and related materials both to and from the point of manufacturing would further this objective. EPA categorized all 25 major industry groups in terms of their relation to manufacturing. This step in the screening process resulted in the following list of candidates: metal mining; coal mining; oil and gas exploration and production; non-metal

mining; motor freight transportation and warehousing; transportation by air; pipelines, except natural gas; electric, gas, and sanitary services; wholesale durable and non-durable goods; and business services.

Once this candidate list was developed, EPA engaged in further discussions with representatives of many of the industries on the list, as well as environmental and labor organizations, state environmental and regulatory representatives, and groups established to provide feedback on TRI initiatives. These discussions provided an opportunity to educate various industry groups about the TRI program, to obtain feedback on the information developed to characterize their industry, and to listen to concerns. A more detailed discussion of the outreach activities conducted as part of this rulemaking can be found in Unit II.B. of this preamble.

A greater level of specificity in the analysis was required to better identify which industry groups and activities were of greater importance in terms of their potential value to section 313 reporting. To refine the analysis, EPA developed data reported in the reporting data systems to the more specific 4-digit SIC code level. These data were incorporated into a ranking model that allowed the management of large volumes of information. For a more detailed discussion of the ranking model, see *Development of SIC Code Candidates: Screening Document* (Ref. 19).

The last stage in the screening process involved an overlay of regulatory definitions and developments, existing program guidance, and any exemptions pertinent to activities identified for the primary candidates. This stage of the analysis allowed EPA to evaluate the degree to which reporting would be expected to occur under EPCRA section 313 for these candidate industry groups. EPA used information developed for this analysis, along with input from specific industries in making further reductions in the list of candidate industry groups (Ref. 19).

As a result of this screening process, EPA eliminated SIC code 16, heavy construction; SIC code 40, railroad transportation; SIC code 42, motor freight, transportation, and warehousing; SIC code 45, air transportation SIC code 46, pipelines, except natural gas; SIC code 47, transportation services; SIC code 55, automotive dealers and gasoline service stations; SIC code 75, automotive repair, service, and parking; SIC code 80, health services; SIC code 82, educational services; and SIC code 87 engineering, research, management, and related services; SIC code 89, miscellaneous services; SIC code 95, administration of environmental quality and housing programs; SIC code 96, administration of economic services; SIC code 97, national security and international affairs; and SIC code 99, nonclassifiable establishments.

D. Additional Considerations in Selecting Additional Industry Group Candidates

In addition to the activities conducted as part of the screening process described above, EPA also excluded certain industry groups from consideration in this proposed action for a number of other reasons. Provided below is a brief discussion of those additional industry groups that were excluded after the application of the screening process.

1. *Impacts on intergovernmental entities.* EPA considered potential impacts on other governmental entities resulting from addition of certain industry groups. As a result of issues raised by this consideration, several industry groups were excluded from consideration for addition under EPCRA section 313 at this time, including Municipal Solid Waste Landfills (MSWLFs), Publicly-Owned-Treatment Works (POTWs), and water supply systems. Each of these industry groups are part of the Major Group SIC code 49, Electric Gas and Sanitary Services. Water systems are classified within SIC code 4941, POTWs are classified within SIC code 4952, and MSWLFs are classified within 4953. These facilities are primarily operated by local municipalities and regional governmental entities. Although each industry group may manage significant quantities of EPCRA section 313 listed toxic chemicals, the manner in which they manage these chemicals raises several cross-governmental issues EPA is continuing to address. As a result, EPA is not considering these industry groups at this time.

2. *Economic considerations.* EPA's economic analysis identified several industry groups that may be adversely affected at a substantially disproportionately high rate, if coverage under EPCRA section 313 was extended to include them. Petroleum and petroleum products wholesalers classified as SIC code 5172, farm supplies classified as SIC code 5191, and paints, varnishes, and supplies classified in SIC code 5198 may have a disproportionately large economic impact if EPCRA section 313 reporting requirements were extended to their industry (Ref. 20). Further, based on a preliminary review, the projected value of reporting for these industry groups is questionable. EPA continues to refine this information and explore alternatives for these industry groups.

3. *Non-listed primary chemical association.* Two industries, non-metal mining classified in SIC code 14 and wholesale durable goods classified in SIC code 50, were excluded from further consideration for this action based on the belief that the majority of activities conducted by facilities operating in these industry groups are believed to involve materials that are not EPCRA section 313 listed chemicals.

4. *Standard facility unit.* One industry group, oil and gas extraction classified in SIC code 13, is believed to conduct significant management activities that involve EPCRA section 313 chemicals. EPA is deferring action to add this industry group at this time because of questions regarding how particular facilities should be identified. This industry group is unique in that it may have related activities located over significantly large geographic areas. While together these activities may involve the management of significant quantities of EPCRA section 313 chemicals in addition to requiring significant employee involvement, taken at the smallest unit (individual well), neither the employee nor the chemical thresholds are likely to be met. EPA will be addressing these issues in the future.

EPA may reconsider at a later date some or all of the industry groups which were excluded as a result of the considerations mentioned above. For more detail regarding EPA's exclusion of these industry groups, refer to *Additional Considerations in Selecting Industries for Addition to EPCRA Section 313* (Ref. 17).

For the industry groups outside of SIC codes 20 through 39 which are not part of today's proposal, EPA requests comment on adding any of these industry groups through a future rulemaking. Commenters should take into account the current limitations of EPCRA section 313 reporting requirements, i.e, exemptions and thresholds, in addressing whether these industries should be required to report under EPCRA section 313.

III. EPCRA Section 313 Statutory Criteria

A. Statutory Construction

Recognizing that the American public has a right-to-know what is happening in the environment near their homes, schools, and business, Congress provided EPA with explicit statutory authority to expand the categories of

facilities required to report under EPCRA section 313. Section 313(b)(1)(A) applies section 313 to facilities that are in SIC codes 20 through 39. Section 313(b)(1)(B) states:

The Administrator may add or delete Standard Industrial Classification Codes for purposes of subparagraph (A), but only to the extent necessary to provide that each Standard Industrial Classification Code to which this section applies is relevant to the purposes of this section.

EPA believes that this provision grants the Agency broad discretion to add industry groups to the industries subject to the reporting requirements under EPCRA section 313. The Conference Report restates EPA's authority to add industry groups and provides additional guidance:

[EPA's] authority is limited, however, to adding SIC codes for facilities which, like facilities within the manufacturing sector SIC codes 20 through 39, manufacture, process or use toxic chemicals in a manner such that *reporting by these facilities is relevant to the purposes of this section* (emphasis added) (Ref. 13).

Thus, the statute directs EPA, when adding industry groups, to consider and be guided by the ''purposes'' of EPCRA section 313. While EPCRA section 313 does not explicitly identify the purposes of the section, the Conference Report makes clear that subsection (h) of section 313

Describes the intended uses of the toxic chemical release forms required to be submitted by this section and expresses the purposes of this section. The information collected under this section is intended to inform the general public and the communities surrounding covered facilities about releases of toxic chemicals, to assist in research, to aid in the development of regulations, guidelines, and standards, and for other similar purposes. (Conference Report at 299, Ref. 13)

Statements by Congress are consistent with this stated language. For example, Congressman Edgar, a principal architect of EPCRA, stated during debate on the Conference Report:

Congress recognizes a compelling need for more information about the Nation's exposure to toxic chemicals. Until now, the success of regulatory programs such as the Clean Air Act, the Resource Conservation and Recovery Act, and the Clean Water Act has been impossible to measure because no broad-based national information has been compiled to indicate increases or decreases in the amounts of toxic pollutants entering our environment. As a result, the reporting provisions in this legislation should be construed expansively to require the collection of the most information permitted under the statutory language. Any discretion to limit the amount of information reported should be exercised only for compelling reasons. A second major principle of this program is to make information regarding toxic chemical exposure available to the public, particularly the local communities most affected. For too long, the public has been left in the dark about its exposure to toxic chemicals. Information that has been available under existing environmental statutes such as the Clean Water Act or the Clean Air Act, has been difficult to aggregate and interpret, which has made it difficult, if not impossible, for the public to gain an overall understanding of their toxic chemical exposure.

Consequently, the reporting requirements should be construed to allow the public the broadest possible access to toxic chemical information in formats that are straightforward and easy to understand. (H. Rep. 99-975, 99th Cong., 2nd Sess., p. 5313 (Oct. 7, 1986)).

Section 313(b) specifies the facilities covered by the toxic chemical release reporting requirement, but also provides the Administrator with the discretion to include additional facilities [either] by specifying additional SIC codes covered by this section—section 313(b)(1)(B) [....] Congress designated facilities in SIC codes 20-39 only as a starting point for this reporting requirement. The principal consideration is whether the addition would meet the objectives of this section to provide the public with a complete profile of toxic chemical releases. The fact that Congress applied the reporting requirement to those in the manufacturing sector should not be considered a limiting criteria in the Administrator's determination. (H. Rep. 99-975, 99th Cong., 2nd Sess., p. 5315 (Oct. 7, 1986)).

Other supporters of EPCRA's community right-to-know provisions echoed Congressman Edgar's view that broad dissemination of information concerning the presence of toxic chemicals in the community is a primary purpose of EPCRA section 313. See, for example, Senator Stafford's statements during debate on the Conference Report:

But the bill goes beyond concern about accidental releases of these toxic and hazardous chemicals. It also recognizes that the public has a right to be informed about routine releases of these chemicals to the air, and the water and the land (H. Rep. 99-975, 99th Cong., 2nd Sess., p. 5185 (Oct. 7, 1986)).

In implementing this section, the Administrator should keep in mind that its primary purpose is to inform the public about routine releases of toxic chemicals. The computer database [established by EPA] must be managed in such a way as to maximize its accessibility and utility to the public (H. Rep. 99 975, 99th Cong., 2nd Sess., p. 5186 (Oct. 7, 1986)).

EPA's reading of the Agency's broad statutory authority to add industry groups to the industries required to report under EPCRA section 313 is echoed in the GAO Report. This report, which represents a critical analysis of the TRI program and provides recommendation on the direction of the program in keeping with Congressional intent, states that ''EPCRA authorizes EPA to revise the chemical list and to require nonmanufacturers to report their emissions'' (Ref. 2). This report further notes that many relevant industries currently are not required to report under EPCRA section 313:

Many industries outside the manufacturing sector that use substantial quantities of toxic chemicals annually are not currently required to report their emissions . . . Because of these reporting exemptions, many persons whom we contacted during our review believed that the inventory's reporting requirements should be revised. We found strong support among government officials, states, reporting facilities, and environmental and public interest groups for expanding the programs reporting requirements to cover industries outside the manufacturing sector. Moreover, we found that 28 states and about half of all reporting facilities favored, for example, requiring reporting by hazardous waste treatment, storage, and disposal facilities (Ref. 2).

Because of this, GAO recommended that EPA expand the number of industries that report under EPCRA section 313:

We believe that to maximize the inventory's usefulness to policymakers and the public, the inventory data must be as comprehensive as possible, *with the data from additional emissions sources* and on additional toxic chemicals. The concerns EPA expressed should be carefully considered. However, these concerns should not override efforts to make the inventory more comprehensive--especially since policymakers and the public need the data to establish environmental priorities and to better measure progress in reducing pollution (Ref. 2).

Based on the Agency's reading of the statute, pertinent legislative history, and the GAO Report, EPA recognizes several purposes of the EPCRA section 313 program, as envisioned by Congress, including: (1) Providing a complete profile of toxic chemical releases and management; (2) compiling a broad-based national data base for determining the success of environmental regulations; and (3) ensuring that the public has easy access to these data on releases of toxic chemicals to the environment. EPA has considered these purposes when exercising its broad discretion to add particular industries to the EPCRA section 313 reporting program.

B. Interpretation of Statutory Criteria

As discussed in Unit III.A. of this preamble, the Conference Report on EPCRA section 313 provides guidance on EPA's authority to add industry

groups to those industry groups that, ''like facilities within the manufacturing sector SIC codes 20 through 39, manufacture, process or use toxic chemicals in a manner such that reporting by these facilities is relevant to the purposes this section'' (Conference Report, p. 5108). For purposes of this rulemaking, which is EPA's first use of section 313(b)(1)(B), EPA has identified three primary factors that the Agency considers as reasonable decision criteria for adding facilities in industry groups under EPCRA section 313(b)(1)(B). The three primary factors identified by EPA are the following: (1) Whether one or more toxic chemicals are reasonably anticipated to be present at facilities within the candidate industry group (''chemical'' factor), (2) whether facilities within the candidate industry group manufacture, process, or otherwise use these toxic chemicals (''activity'' factor), and (3) whether facilities within the candidate industry group could reasonably be anticipated to increase the information made available pursuant to EPCRA section 313, or otherwise further the purposes of EPCRA section 313 (''information'' factor).

EPA believes that each of these three primary factors is important in adding industry groups (referenced by SIC code) to EPCRA section 313(b)(1) because each will help ensure that adding the industry groups will further the purposes of EPCRA section 313. Namely, each of these primary factors ensures that EPA will be able to provide the public with easy access to more complete information concerning toxic chemical releases and other waste management data. This more complete picture also will allow EPA, other Federal, state, and local governments, regulated entities, and the public to measure the success of regulatory and voluntary environmental initiatives. Therefore, EPA believes that these decision criteria are relevant to the purposes of the statute and are appropriate to use in making listing determinations pursuant to EPCRA section 313(b)(1)(B).

A general discussion of each primary factor is included below, and a more detailed discussion of how each primary factor was applied to each industry group proposed for listing can be found in Unit V. of this preamble. EPA is requesting comment on the use of these decision factors for the EPCRA section 313 program.

1. *Whether one or more listed toxic chemicals are reasonably anticipated to be present at facilities within the candidate industry group (''Chemical'' Factor).* In addressing whether the chemical factor is met, EPA will consider evidence indicating that facilities within an industry group are reasonably anticipated to have involvement with one or more EPCRA section 313 listed toxic chemicals as part of its routine operations. Association with section 313 listed toxic chemicals suggests that facilities within industry groups should be covered under EPCRA section 313, given the purpose of EPCRA section 313 is to provide information to the public about toxic chemicals in their communities.

2. *Whether facilities within the candidate industry group manufacture, process, or otherwise use EPCRA section 313 listed toxic chemicals (''Activity'' Factor).* In addressing the ''activity'' factor, EPA will consider evidence indicating that facilities within the candidate industry group manufacture, process, or otherwise use one or more EPCRA section 313 listed toxic chemicals. This ''activity'' factor relates directly to the manner in which EPCRA section 313 listed chemicals are managed. To make this determination, EPA will use the EPCRA section 313 statutory definitions of manufacturing and processing. In addition, for purposes of determining whether facilities within a candidate SIC code otherwise use a toxic chemical, EPA will consult its regulatory definition and guidance for ''otherwise use.'' For this rulemaking, EPA examined whether its current guidance on ''otherwise use,'' which was developed for the manufacturing sector in SIC codes 20 through 39, is appropriate for facilities in industry groups outside SIC codes 20 through 39. Based on this review and other considerations, the Agency is planning to modify its interpretation of ''otherwise use'' to include disposal, stabilization, and treatment for destruction. See Unit IV. of this preamble for a more detailed discussion of ''otherwise use.''

3. *Whether facilities within the candidate industry group could reasonably be anticipated to increase the information made available pursuant to EPCRA section 313, or otherwise further the purposes of EPCRA section 313 (''Information'' Factor).* In addressing the ''information'' factor, EPA will consider any information that bears on whether reporting by facilities within the candidate industry group could reasonably be anticipated to increase the information made available pursuant to EPCRA section 313, or otherwise further the purposes of EPCRA section 313. The information considered for any specific industry group will necessarily vary from industry group to industry group based on the nature of the industry group and what relevant information is available. Under this factor, EPA may consider information relating to, but not limited to, one or more of the following topics: (1) Whether the addition of the candidate industry group will lead to reporting by facilities within that candidate industry group (e.g., whether facilities within the candidate industry group will conduct activities which exceed the reporting thresholds in section 313(f)); (2) whether facilities within the candidate industry group are likely to be subject to an existing statutory or regulatory exemption from the requirement to file a Form R; (3) whether submitted Form R reports from that industry group could be expected to contain release and waste management data; or (4) whether a significant portion of the facilities in the industry group would be expected to file a Toxic Chemical Release Inventory Certification Statement (see 59 FR 61488, November 30, 1994).

EPA believes that the above three primary factors may be addressed by evaluating data collected by EPA or other government agencies (e.g., National Institute of Occupational Safety and Health (NIOSH) and Occupational Safety and Health Administration (OSHA)), as well as information provided by facilities through case studies, surveys, or site visits; facility records or operation plans; information on materials in commerce; or common practices as found in the literature, such as trade journals and industry reports; or other available sources. Some of the pertinent EPA data systems include the Aerometric Information Retrieval System (AIRS, collected under the Clean Air Act), the Permit Compliance System (PCS, collected under the Clean Water Act), and the Biennial Report System (BRS, collected under the Resource Conservation and Recovery Act). While EPA cannot use these data to estimate likely TRI releases and other waste management volumes, EPA can and has used information from these and other sources, such as those listed above, to assist in identifying appropriate candidates. In the absence of any such data, EPA will rely on other relevant sources of data.

For example, during EPA's evaluation of the electric services industry group (SIC code 4911), 40 million pounds of releases or waste volumes were identified in BRS, 31 million pounds in AFS, and 15 million pounds in PCS. EPA does not believe that this information can be used to predict TRI data or that it is an adequate substitute for TRI data; however, EPA did use this

information to identify the electric services industry group as a candidate for inclusion in this proposed rule. See *Appendix B: Routinely Reported Information - Chemical Detail* (Ref. 8), for similar information on other candidate industry groups.

EPA recognizes that different industry groups may be regulated under different statutory and regulatory regimes. An industry may have very limited regulatory requirements that require their reporting of chemical uses and management practices, for example, and, therefore, this industry would not be represented in some data sources. This often leads to different amounts and types of information being available to the Agency from these sources. Thus, EPA recognizes that in some cases the available data from these sources may not reflect an industry's actual involvement with section 313 chemicals. For those industry groups for which such information is limited, EPA believes that it is appropriate to rely more heavily on sources of data other than regulatory sources. EPA requests comment on other sources of appropriate information.

IV. Clarification of Threshold Activities

A. Statutory Background

Only facilities that exceed certain chemical activity thresholds (and that meet the SIC code and employee threshold criteria) are required to report under EPCRA section 313. These thresholds are detailed in section 313(f)(1) of EPCRA:

> The threshold amounts for purposes of reporting toxic chemicals under this section are as follows:
>
> (A) With respect to a toxic chemical *used* at a facility, 10,000 pounds of the toxic chemical per year.
>
> (B) With respect to a toxic chemical *manufactured or processed* at a facility--
>
> * * *
>
> (iii) For the form required to be submitted on or before July 1, 1990, and for each form thereafter, 25,000 pounds of the toxic chemical per year. EPCRA 313(f)(1), (emphases added).

In addition to the reporting thresholds specifically listed in EPCRA section 313(f)(1), EPA has established an alternate threshold for facilities with low reportable releases and wastes under section 313(f)(2).

EPCRA section 313 defines ''manufacture'' and ''process''; however, the statute does not specifically define ''use'' or ''otherwise use.'' The only limitation Congress placed on what activities could be considered ''use'' are those chemical activities that are exempt from EPCRA section 313 reporting as provided in EPCRA section 327. These exempted activities relate to the ''transportation, including the storage incident to such transportation, of any substance or chemical subject to the requirements including the transportation and distribution of natural gas.''

Because the statutory language does not include a specific definition of ''use,'' EPA has looked to other sources for guidance in formulating the Agency's interpretation of the term. The dictionary definitions of ''use'' are so encompassing that they can be argued to cover nearly any activity impacting a toxic chemical. For example, the Random House College Dictionary, Revised Edition (1982) includes a broad range of definitions of the term, including ''to employ for some purpose,'' ''to expend or consume in use,'' and ''to consume entirely.'' Given the breadth in these definitions, EPA's interpretation of what might be ''otherwise use'' activities could capture a significant range of activities impacting a toxic chemical subject to the relevant purposes of EPCRA section 313. Thus to determine the appropriate scope of this definition, EPA has considered Congress' stated purposes for enacting EPCRA section 313 as found in the statutory language and the legislative history.

As discussed in Unit II.A. of this preamble, Congress wanted the reporting requirements of EPCRA section 313 to be applied broadly, and to provide the greatest amount of information to the public and federal, state, and local governments. In furtherance of this goal, Congress recognized that EPA may need to add chemicals and industry groups to the chemicals and industry groups originally listed in EPCRA section 313 to provide more complete chemical and facility profiles important to the local public and for local decision making. Moreover, Congress found information on chemical management activities relevant to the needs of local communities in requiring that reporting include, for example, information on waste streams and how they are handled. *See*, e.g., 42 U.S.C. 11023(g). Given the primary goal of providing information to the public on listed toxic chemicals present, released, and managed in communities, EPA does not believe that it is reasonable to conclude that Congress would intend any provision of EPCRA section 313 to be interpreted to significantly limit the information available to the public. Because interpreting the definition of ''use'' narrowly can have the unintended impact of limiting the amount and kind of information readily available to local communities, EPA believes that the term ''otherwise use'' should be interpreted broadly. Consistent with this belief, EPA promulgated the broad definition of ''otherwise use or use'' in 40 CFR 372.3.

B. Regulatory Background

In 1988, to address the lack of a statutory definition, EPA promulgated a definition of ''otherwise use'' in the regulations implementing EPCRA section 313:

> Otherwise use or use means any use of a toxic chemical that is not covered by the terms manufacture or process and includes use of a toxic chemical contained in a mixture or trade name product. Relabeling or redistributing a container of a toxic chemical where no repackaging of the toxic chemical occurs does not constitute use or processing of the toxic chemical (53 FR 4525, February 16, 1988).

However, in the preamble to the final rule, EPA distinguished its interpretation of ''otherwise use'' from ''processing'' by stating that ''otherwise use'' involves a non-incorporative activity.

> EPA is interpreting otherwise using a [listed] toxic chemical to be activities that support, promote, or contribute to the facility's activities, where the chemical does not intentionally become part of a product distributed in commerce. (53 FR 4506.)

EPA also recognized that it was appropriate to place some limitations on those quantities of toxic chemicals that should be included in a facility's threshold calculations. These exemptions were based on review of comments and questions received on the proposed rule and in workshops held prior to the publication of the final rule. The following uses of chemicals are currently exempt from section 313 threshold determinations and from the EPCRA section 313 reporting requirements. (40 CFR 372.38; 53 FR 4528, February 16, 1988).

(1) Use as a structural component of the facility. This type of use refers to materials containing listed section 313 chemicals that may be present at a facility but that are not involved in the processes conducted by the facility for purposes of their chemical properties. An example of this type of case is use of copper in copper pipes. EPA believes this type of activity is an ancillary use of copper which would not add to the purposes served by providing information to the public.

(2) Use of products for routine janitorial or facility grounds maintenance. Examples include uses of janitorial cleaning supplies, fertilizers, and pesticides similar in type or concentration to consumer products.

EPA believes that these types of chemical uses are incidental to the function of the facility. While grounds maintenance may be seen as a contributing activity to the facility overall, it is not a necessary action that promotes the function or purpose of the facility.

(3) Personal uses by employees or other persons at the facility of foods, drugs, cosmetics, or other personal items containing toxic chemicals, including supplies of such products within the facility such as in a facility-operated cafeteria, store, or infirmary.

(4) Use of products containing toxic chemicals for the purpose of maintaining motor vehicles operated by the facility. For similar reasons provided for the janitorial and facility grounds maintenance exemption, the use of materials containing listed section 313 chemicals for the purpose of maintaining motor vehicles is believed by EPA to be an incidental chemical use relative to the overall function of facilities currently covered under section 313.

(5) Use of toxic chemicals present in process water as drawn from the environment or from municipal sources or toxic chemicals present in air used either as compressed air or as part of combustion. While air and water may be necessary ingredients in particular manufacturing or processing activities, EPA determined that the generally small quantities of listed section 313 chemicals that each may contain would not be reportable. EPA established this exemption both to reduce the burden on the reporting industry and to have industry focus on those quantities of toxic chemicals over which they exercise some control.

(6) Uses of articles. The inclusion of the article exemption was for the expressed purpose of exempting articles that contain listed toxic chemicals from threshold and reporting determinations. EPA determined that it is appropriate to exempt chemicals that are contained in articles as defined by a modification of the definition in the OSHA Hazard Communication Standard (HCS). The HCS places a condition on the use of things classified as articles such that when they are used they do not result in any section 313 listed chemical releases. EPA has further modified the OSHA HCS definition such that any use or processing of the articles that results in releases makes the activity ineligible for the exemption.

(7) Use of toxic chemicals in certain laboratory activities. This exemption allows the exclusion of amounts of chemicals from threshold calculations that are manufactured, processed or otherwise used in laboratory activities conducted under the supervision of a technically qualified individual. This exemption was provided in part to be consistent with other sections of EPCRA, specifically sections 311 and 312, as well as the OSHA HCS. EPA limited this exemption to non-specialty chemical production laboratories and non-pilot plant scale operations. EPA expressed some concerns over the releases of chemicals from exempted laboratory activities in the final rule and stated that the Agency would review these types of facilities for potential future coverage.

At this time, EPA is not proposing a change to any of the exemptions listed above. EPA may, however, reconsider the application of these exemptions in the future. (For additional information on these exemptions contact the EPCRA Hotline at the telephone number or address listed in the FOR FURTHER INFORMATION CONTACT unit of this document.)

The exemptions promulgated by EPA to date are intended to exclude from threshold and reporting calculations those activities that are not principal to the primary function of the facility. The exemptions were provided to allow facilities to focus on those chemical management activities that support, promote, or significantly contribute to the primary purpose of the facility. EPA believes that these activities are ones over which the facility has primary control.

C. Current ''Otherwise Use'' Interpretive Guidance

EPCRA section 313 reporting guidance has been developed to assist covered facilities in complying with section 313. This reporting guidance has been provided to reporting facilities as responses to questions to EPA's EPCRA Hotline, as response to letters from subject facilities, and distribution of a ''Question and Answer'' document. For some reference to these other sources of information on ''otherwise use'' see the document *EPCRA Section 313 Otherwise Use Activities* (Ref. 21).

Given that the original section 313 facilities list was limited to those facilities which principally operate in the manufacturing sector, the reporting guidance was tailored to address the principal activities conducted by manufacturing facilities. In particular, facilities were instructed not to consider amounts of chemicals treated or disposed in calculating ''otherwise use'' reporting thresholds. Although current guidance instructs facilities to include the amounts of listed chemicals released during treatment or disposal in a facility's release and waste management estimates (assuming that the facility exceeds a manufacture, process, or otherwise use threshold for the chemical elsewhere at the facility), current guidance instructs facilities not to include the amounts treated or disposed toward the ''manufacture,'' ''process,'' or ''otherwise use'' threshold.

Current guidance was not based on an evaluation of activities actually conducted by manufacturing facilities, but instead was conceived with the mind that the industrial classification system places facilities primarily engaged in waste treatment and disposal activities outside the manufacturing sector, and therefore, were not subject to the original EPCRA section 313 requirements.

D. Proposed Changes to Interpretive Guidance

As the focus of EPCRA section 313 expands to include industry groups whose primary activities are similar to or support manufacturing either as inputs (e.g., energy) or outputs (e.g., waste treatment), EPA reconsidered its interpretive guidance on otherwise use for facilities within SIC code 20 through 39, and facilities within the industry groups being proposed. EPA is concerned that, based on current guidance, the public may not have access to information relating to releases of toxic chemicals from facilities within SIC codes 20 through 39 that are receiving materials for the purposes of treatment for destruction, stabilization, or disposal. As a result, EPA believes that it is appropriate to develop guidance addressing this concern. Further, EPA believes it is appropriate to develop guidance that is consistent with the primary activities conducted by facilities within the candidate industry groups. Therefore, EPA is modifying its interpretation of activities considered ''otherwise used'' as it applies to activity thresholds under section 313 to include treatment for destruction, disposal, and waste stabilization (hereafter referred to as ''stabilization'') when the EPCRA section 313 facility engaged in these activities receives materials containing any chemical (not limited to EPCRA section 313 listed toxic chemicals) from one or more other facilities (regardless of whether the generating and receiving facilities have common ownership) for the purposes of further waste management activities.

EPA interprets waste stabilization consistent with the definition at 40 CFR 265.1081, except that for purposes of EPCRA section 313 the definition

should be interpreted to apply to any EPCRA section 313 listed toxic chemical or waste containing any EPCRA section 313 listed toxic chemical. A synonym for waste stabilization is waste solidification. EPA interprets ''treatment for destruction'' to mean the destruction of the toxic chemical such that the substance is no longer a toxic chemical subject to reporting under EPCRA section 313. Also, for purposes of the EPCRA section 313 ''otherwise use'' reporting threshold, disposal would include underground injection, placement in landfills/surface impoundments, land treatment, or other intentional land disposal. See ''Toxic Chemical Release Inventory Reporting Instructions'' (1995 version) at p. 35 for a list of activities to be reported under ''Transfers Off-site for Purposes of Disposal.''

The following are four examples of this revised interpretation.

Example 1: For example, a facility receives a material containing 22,000 pounds of chemical ''A.'' Chemical ''A'' is an EPCRA section 313 listed toxic chemical. The facility treats for destruction chemical ''A.'' Included among the various activities covered by EPA's revised interpretation of ''otherwise use'' is the ''treatment for destruction'' of a toxic chemical received by the facility from off-site. Because the facility received and treated for destruction chemical ''A,'' the amount of chemical ''A'' treated for destruction would be included in the calculation of the amount of chemical ''A'' ''otherwise used'' at the facility. In this case, 22,000 pounds of chemical ''A'' would be considered ''otherwise used.'' Thus, because the facility ''otherwise used'' chemical ''A'' above the 10,000 pound statutory threshold for ''otherwise use,'' the facility would be required to report all releases of, and management activities involving, chemical ''A.''

Example 2: Assume now that the same facility, in treating for destruction chemical ''A,'' manufactures 11,000 pounds of chemical ''B.'' Chemical ''B'' is also an EPCRA section 313 listed toxic chemical. This manufacture of chemical ''B'' is below the ''manufacturing'' reporting threshold. However, the facility disposes of chemical ''B'' on-site. Included among the various activities covered by EPA's revised interpretation of ''otherwise use'' is the disposal of a toxic chemical that is produced from the management of a waste that is received by the facility. In this example, because the facility received from off-site a material containing a chemical that is treated for destruction (i.e., chemical ''A'') and during that treatment produced and subsequently disposed of chemical ''B,'' the disposal of chemical ''B'' under EPA's revised interpretation would be considered ''otherwise used.'' Because the facility disposed of, or otherwise used, 11,000 pounds of chemical ''B,'' the 10,000 pound statutory threshold for ''otherwise use'' is met. Thus, the facility would need to report all releases of, and management activity involving, chemical ''B.''

Example 3: As another example, a facility produces on-site a material containing 22,000 pounds of chemical ''C.'' Chemical ''C'' is *not* an EPCRA section 313 listed toxic chemical. Also, chemical ''C'' was not manufactured as a result of managing a waste received from off-site. The facility treats for destruction chemical ''C'' and during treatment manufactures 11,000 pounds of chemical ''D.'' Chemical ''D'' is an EPCRA section 313 listed toxic chemical. The facility subsequently disposes of chemical ''D.'' In this example, although the facility disposes of chemical ''D,'' the 11,000 pounds of chemical ''D'' is not considered ''otherwise used'' under EPA's revised interpretation because the material from which chemical ''D'' is produced (i.e., the material containing the 22,000 pounds of chemical ''C'') was not received by the facility from off-site. Thus, in disposing of chemical ''D,'' the facility does not exceed the 10,000 pound statutory threshold for ''otherwise use.''

Example 4: However, based on Example 3, if chemical ''C'' were received from off-site or was created in waste management activities conducted on materials received from off-site, the disposal of chemical ''D'' would be considered an ''otherwise use'' activity involving chemical ''D.'' Therefore, the disposal of the 11,000 pounds of chemical ''D'' would exceed the 10,000 pound statutory threshold for ''otherwise use,'' and the facility would need to report all releases and management activities involving, chemical ''D.''

EPA requests comment on its revised interpretation as explained by these examples.

EPA believes that this modified interpretation of ''otherwise use'' better serves the purposes of providing communities with information that assists them in making decisions. EPA believes that these waste management activities represent activities that generate, use, and are the source of significant releases of listed toxic chemicals. Thus, EPA believes that current guidance, which allows amounts of listed chemicals that are disposed, stabilized, or treated for destruction to be reported only when the chemical exceeds thresholds elsewhere at the facility, potentially excludes from reporting a large amount of listed chemicals managed at certain facilities.

In addition, this modification of the interpretation of ''otherwise use'' is consistent with EPA's approach for interpreting ''manufacture.'' For example, EPA's regulatory definition of ''manufacture'' and current guidance includes as ''manufacturing'' the amount of a listed toxic chemical that is coincidentally manufactured during waste treatment or disposal by the facility (40 CFR 372.3). Therefore, the amounts of these chemicals must be counted toward the manufacturing threshold. Further, assuming that the manufacturing threshold is met under EPCRA section 313, the facility must report the amount of that manufactured chemical that is released or otherwise managed as waste. EPA believes that modifying the interpretation of ''otherwise use'' to include activities such as treatment for destruction, stabilization, and disposal makes that definition more consistent with EPA's guidance on calculating manufacturing thresholds. Finally, EPA believes that current guidance that omits amounts disposed, stabilized, or treated for destruction is inconsistent with the spirit of EPCRA when applied to the additional facilities proposed for listing in this action. Excluding such activities from the interpretation of ''otherwise use'' would prevent the dissemination of information deemed useful in serving the public's interest and the purposes of section 313.

Because EPA believes that most facilities in SIC codes 20 through 39 dispose or treat only waste that was already manufactured, processed, or otherwise used at their facility, the Agency does not believe that this change in guidance will affect the EPCRA section 313 reporting status of a significant number of facilities within the manufacturing sector. There is one category of facilities in the manufacturing sector that could be affected by this revised guidance. Specifically, it could affect those facilities in the manufacturing sector that receive wastes from other facilities and manage those wastes through treatment or disposal. Under the revised guidance, the quantity of EPCRA section 313 listed toxic chemicals that undergo these activities must be included in the ''otherwise use'' threshold, whereas currently such facilities are instructed to exclude from the ''otherwise use'' threshold determination the quantity of

the toxic chemical treated for destruction, stabilized, or disposed. EPA requests comment on its revised interpretation of ''otherwise use.'' EPA also requests comment on the number of facilities within the manufacturing sector that would be affected by this revised interpretation.

An alternative to modifying the scope of ''otherwise use'' through reporting guidance is amending the regulatory definition of ''otherwise use'' or ''use'' consistent with this modified approach. As noted above, the current regulatory definition of ''otherwise use'' is very broad and covers EPA's revised interpretation. While EPA does not believe a change in the regulatory definition is necessary to clarify its interpretation, EPA is requesting comment on whether it should amend the regulatory text to make clear this revision. The regulatory definition would read as follows:

Otherwise use or *use* means any use of a toxic chemical that is not covered by the terms ''manufacture'' or ''process'', and includes treatment for destruction, stabilization (without subsequent distribution in commerce), disposal, and other use of a toxic chemical, including a toxic chemical contained in a mixture or trade name product. *Except that*

(1) Facilities engaged in treatment for destruction, stabilization, or disposal are not using a toxic chemical in these activities unless the facility receives materials from other facilities for purposes of further waste management activities.

(2) Relabeling or redistributing a container of a toxic chemical where no repackaging of the toxic chemical occurs does not constitute use of the toxic chemical.

EPA requests comment on whether the regulatory definition of ''otherwise use'' should be amended.

An alternative interpretation is including in the definition of ''otherwise use'' all disposal, treatment for destruction, and stabilization, regardless of whether the facility receives materials from off-site for the purposes of treatment for destruction, stabilization, or disposal. This alternative approach may affect those facilities that manufacture or process a listed chemical below the 25,000 pound threshold, but that treat or dispose of more than 10,000 pounds of that chemical; the disposal is the activity that would cause the facility to exceed the otherwise use threshold. The Agency requests comment on the number of facilities in this category that may be affected by this alternate approach for modifying EPA's guidance, and or whether this alternative interpretation and whether it would better serve the purposes of EPCRA section 313.

E. Relationship Among Manufacture, Process, and Otherwise Use

EPA believes that the revised interpretation and change in reporting guidance is consistent with the general focus of section 313 on the collection and dissemination of information relating to the activities involving toxic chemicals in a community. Further, EPA believes that toxic chemicals that are disposed, stabilized, or treated for destruction are more appropriately considered otherwise used, as opposed to manufactured or processed.

Under EPCRA section 313, ''manufacture'' means to produce, prepare, import, or compound a chemical listed under section 313, including coincidental production of a toxic chemical. Thus, disposal, stabilization, or treatment for destruction of a toxic chemical, whether or not it was produced at the facility, is not appropriately considered manufactured.

EPCRA section 313 defines ''process'' as ''the preparation of a toxic chemical, after its manufacture, for distribution in commerce- (I) in the same form or physical state as, or in a different form or physical state from, that in which it was received by the person so preparing such chemical, or (II) as part of any article containing the toxic chemical.'' Although the act of treatment of a chemical contained in a waste may closely relate to many of the activities described by the processing definition, the statute provides a limitation that the chemical be incorporated into a product that is further distributed in commerce. In a case where a facility receives a chemical that is contained in a ''waste,'' and the facility recovers the chemical from the ''waste'' and distributes the chemical in commerce, EPA believes the facility is processing the chemical. In a case where a facility receives a waste containing a toxic chemical and disposes or treats for destruction the toxic chemical on-site, EPA does not believe the facility is processing the toxic chemical because the toxic chemical is not distributed in commerce. EPA requests comment on the relationship of ''manufacture,'' ''process,'' and EPA's revised interpretation of ''otherwise use.''

EPA requests comment on all aspects of the Agency's broadening of the concept of ''otherwise use.''

V. EPA's Technical Review

A. Introduction

Data on the candidate industry groups were reviewed for evidence indicating whether EPCRA section 313 listed toxic chemicals are present at facilities within that industry group, whether facilities within that industry group manufacture, process, or otherwise use listed toxic chemicals, and whether listing facilities within that industry group could reasonably be anticipated to increase the available information on TRI.

For each industry group proposed for addition to EPCRA section 313 in this rulemaking, EPA conducted an extensive assessment. Only after this careful review was a final determination made as to whether to propose to list the industry group pursuant to EPCRA section 313(b)(1)(B). The information summarized below for each industry group describes the key data elements upon which EPA relied to determine that the addition of the facility sector is relevant to the purposes of EPCRA section 313 pursuant to section 313(b)(1)(B) criteria. A more extensive review of the existing data base for each industry group proposed for listing, which reflects the entire weight-of-the-evidence considered by EPA, is contained in the following support documents and in the record supporting this proposed rulemaking: ''SIC Code Profile 10: Metal Mining'' (Ref. 6); ''SIC Code Profile 12: Coal Mining'' (Ref. 7); ''SIC Code Profile 49: Electric, Gas, and Sanitary Services'' (Ref. 8); ''SIC Code Profile 51: Wholesale Trade - Nondurable Goods'' (Ref. 9); ''SIC Code Profile 73: Business Services'' (Ref. 10); and ''Economic Analysis of the Proposed Rule to Add Certain Industries to EPCRA Section 313'' (Ref. 20). These documents contain a complete list of the references that were used in support of these proposed additions. Each industry group is identified by facility sector name and SIC code.

EPA requests comment on the industry groups proposed for addition. In addition, EPA requests comment on any issues that may be specific to any of the individual industry groups.

B. Chemicals and Allied Products - Wholesale

EPA is proposing to require facilities operating in SIC code 5169, Wholesale Nondurable Goods—Chemicals and Allied Products, Not Elsewhere Classified (hereafter ''Chemicals and Allied Products''), be subject to EPCRA section 313. Facilities within this industry group receive EPCRA section 313 chemicals in bulk, take possession of those chemicals and reformulate, introduce chemical additives, or repackage materials containing section 313 chemicals. These activities fall within the statutory definition of ''process,'' and are currently being reported by facilities operating in the manufacturing sector.

1. *Description of industry*. Facilities operating in SIC code 5169, Wholesale Nondurable Goods—Chemicals and Allied Products, not elsewhere classified, consists of facilities engaged primarily in the consolidation of a variety of bulk chemicals and packaged products prior to their distribution to a variety of destinations including retailers, other wholesale facilities, and in some cases to manufacturing facilities for industrial use or for product formulation. Goods managed by facilities in the Chemicals and Allied Products industry group may include any of a number of EPCRA section 313 listed chemicals.

2. *Summary of evaluation*. Based on EPA's evaluation of this industry, the Agency believes that reformulation and repackaging activities conducted by facilities in the Chemicals and Allied Products industry group routinely involve the manufacture, processing, or otherwise use of EPCRA section 313 chemicals and that the facilities within this industry group are likely to report information relevant to the purposes of EPCRA section 313. The present determination is consistent with current reporting guidance, and the application of existing thresholds and exemptions under EPCRA section 313. The Agency anticipates reporting of releases and other waste management information from facilities operating in SIC code 5169.

3. *Chemicals associated with the Chemicals and Allied Products industry group*. Facilities classified in the Chemicals and Allied Products industry group, are involved in the wholesale distribution and management of a variety of chemicals from such industrial chemical categories as alkalines and chlorine, industrial gases, specialty cleaning and sanitation preparations, noncorrosive products and materials, and industrial salts and polishes. Included within these industrial chemical categories are such specific EPCRA section 313 chemicals as chlorine, sodium cyanide, formaldehyde, and methyl ethyl ketone to name a few (Refs. 1 and 3). EPA's analysis has identified several EPCRA section 313 listed toxic chemicals that are commonly managed by facilities operating in the Chemicals and Allied Products industry group (Ref. 20). Based on this finding, EPA believes that a strong indication exists that those facilities classified in the Chemicals and Allied Products industry group are involved with EPCRA section 313 listed toxic chemicals on a routine basis.

4. *Manufacture, process, or otherwise use activities involving EPCRA section 313 chemicals*. Some of the facilities within the Chemicals and Allied Products industry group are involved in the preparation of EPCRA section 313 listed toxic chemicals, or mixtures containing EPCRA section 313 listed toxic chemicals, after their manufacture, for distribution in commerce. The type of preparation activities conducted by facilities classified in the Chemicals and Allied Products industry group include reformulation and or repackaging prior to being distributed.

For example, a facility may purchase and distribute organic chemicals, which are mostly liquids and many of which may be EPCRA section 313 listed toxic chemicals. The chemicals are transferred into various size containers for resale. In addition to any material losses during the transfer, some toxic chemical wastes may be generated as pumps and hoses are flushed. As another example, a facility may routinely blend chemicals (many of which may be EPCRA section 313 listed toxic chemicals) to formulate, for example, lacquer thinner for autobody shops. Some facilities may routinely handle 27 or more EPCRA section 313 listed toxic chemicals.

EPA believes that these types of preparation activities of EPCRA section 313 listed toxic chemicals clearly fit within the statutory definition of process and would constitute a reportable activity under EPCRA section 313. EPA believes that those facilities whose management of EPCRA section 313 chemicals is limited to the receipt and distribution of products containing EPCRA section 313 listed toxic chemicals without the products being reformulated or repackaged would not be required to submit Form R reports for these chemicals because these activities do not meet the definition of manufacture, process, or otherwise use. Also, EPA does not believe that the limited act of storage of a chemical constitutes a reportable activity under EPCRA section 313.

5. *Types of information anticipated*. Based on EPA's analysis, releases and other waste management information resulting from the reformulation and repackaging of EPCRA section 313 chemicals and products containing section 313 chemicals are anticipated. Reports are expected for formaldehyde, methyl ethyl ketone, and methanol. As discussed below, facilities in this industry group engage in many of the same activities as facilities in SIC codes 20 through 39. Therefore, it is reasonable to believe that these similar activities would result in similar types of release and waste management information. For example, while releases can and do occur from accidents, inadequate storage procedures, or damages during transport, EPA is not proposing the inclusion of this industry based solely on these activities (Ref. 3).

Based on data required by the Massachusetts Toxic Use Reduction Act, which requests similar information to that required under EPCRA section 313, evidence suggests that facilities operating within the Chemicals and Allied Products industry group will report on a number of EPCRA section 313 chemicals (Ref. 3). Based on these data, it appears that these facilities will report primarily on releases to air of volatile compounds likely originating from reformulation and repackaging activities. Based on the Massachusetts data, 8 facilities reported a primary SIC code of 5169 and submitted a total of 50 reports that were also EPCRA section 313 chemicals. These 8 facilities reported an average of 6.25 reports per facility as compared to the average number of reports for currently listed manufacturing facilities of 3.7. The total releases reported were approximately 75,450 pounds for 17 listed chemicals. The median facility release to air was approximately 3,180 pounds of listed toxic chemicals (Ref. 3).

EPA estimates that reporting under EPCRA section 313 from this industry may result in 8,354 Form R reports and 2,785 Toxic Chemical Release Certification Statements annually submitted by 782 facilities. This number of facilities estimated to report represents 9 percent of all industries facilities within this industry group.

6. *Reporting considerations*. Some facilities, which are primarily classified as manufacturers (SIC codes 20 through 39) but that also warehouse and distribute their products, are currently reporting release and waste management information associated with these activities that are similar to those conducted by facilities whose primary classification is in SIC code 5169. EPA believes that facilities operating in the Chemicals and Allied Products industry group (SIC code 5169) that are engaged in the manufacture, process, or otherwise use of EPCRA section 313 listed toxic chemicals above reporting thresholds should also be required to inform the public about releases and other waste management activities of EPCRA section 313 listed toxic chemicals.

EPA estimates the potential costs for reporting for the first year by this industry group to be $51.5 million and $33.5 million in subsequent years.

7. *Conclusion*. For the reasons identified above, EPA believes that facilities in the Chemicals and Allied Products industry group in SIC code 5169 satisfy the requirements of EPCRA

section 313(b)(1)(B) because EPA believes that reporting for this industry group is relevant for the purposes of EPCRA section 313. Accordingly, EPA proposes to add this industry group to the list of industry groups required to report pursuant to EPCRA section 313 and the PPA section 6607.

C. Petroleum Bulk Stations and Terminals - Wholesale

EPA is proposing to require petroleum bulk stations and terminals in SIC code 5171 to report under EPCRA section 313. This industry group includes facilities that receive petroleum products and petroleum additives that contain EPCRA section 313 chemicals, take possession of those chemicals and reformulate the products and/or repackage those petroleum products prior to their distribution in commerce.

1. *Description of industry*. The petroleum industry maintains many bulk stations and terminals that manage a variety of refined petroleum products. The types of petroleum products managed by these facilities include crude oil, motor gasoline, diesel, heating fuel, aviation jet fuel, asphalt, and liquid petroleum hydrocarbons. The primary functions of these facilities include storage, mixing, blending, distribution, and sale of refined petroleum products (Ref. 9).

2. *Summary of evaluation*. Based on EPA's evaluation of this industry, the Agency believes that the mixing, blending, repackaging, and preparation activities conducted by facilities in the petroleum bulk stations and terminals industry routinely involve the manufacture, process, or otherwise use of EPCRA section 313 listed toxic chemicals and that facilities within this industry group are likely to report information relevant to the purposes of EPCRA section 313. The present determination is consistent with current reporting guidance, and the application of existing thresholds and exemptions under EPCRA section 313. EPA anticipates reporting of releases and other waste management information from facilities in this industry group.

3. *Chemicals associated with the industry*. Bulk petroleum terminals principally manage refined petroleum products prior to their distribution in commerce. The types of petroleum products managed by bulk terminals are likely to include one or more EPCRA section 313 chemicals. Based on EPA's analysis, EPCRA section 313 listed toxic chemicals in gasoline managed by bulk terminals that are likely to be present include benzene, cyclohexane, ethyl benzene, toluene, 1,2,4-trimethylbenzene, and xylene. Section 313 chemicals present in crude oil, No. 2 fuel oil, diesel and No. 6 fuel oil include benzene, phenanthrene, and benz(a)anthracene (Refs. 9 and 20).

4. *Manufacture, process, or otherwise use activities involving EPCRA section 313 chemicals*. Bulk petroleum terminals serve as an intermediate point in the commerce cycle of the petroleum industry. Based on EPA's analysis, facilities operating in SIC 5171 take possession of refined petroleum products and perform mixing, blending, and reformulation activities prior to their distribution in commerce. EPA believes that the mixing, blending, and reformulation activities, of petroleum products containing EPCRA section 313 listed toxic chemicals, prior to their distribution in commerce clearly fits within the EPCRA section 313 statutory definition of processing.

Facilities in this industry group may also introduce petroleum additives in order to reformulate the product prior to distribution. This activity involves the intentional incorporation of an EPCRA section 313 listed toxic chemical into a product prior to distribution. Thus, EPA believes that this activity constitutes processing of an EPCRA section 313 listed toxic chemical as defined by the statutory definition. In addition, EPCRA section 313 chemicals may be otherwise used during normal facility maintenance activities (excluding exempt routine janitorial or facilities grounds maintenance activities) (Ref. 9).

5. *Type of information anticipated*. Storage, mixing, blending, and product transfer are among the activities during which significant releases of EPCRA section 313 chemicals are likely to occur at bulk terminal facilities. These releases are likely to be in the form of fugitive air emissions, tank sludges, or spills into surface water, groundwater, or land of section 313 chemicals contained in petroleum products. EPA anticipates information on these and other waste management practices for chemicals such as, cyclohexane, ethyl benzene, toluene, 1,2,4-trimethylbenzene, xylene, phenanthrene, and benz(a)anthracene (Ref. 20). While storage tanks at bulk terminals are generally equipped with internal floating roofs and other features designed to reduce loss of volatile components, losses of some section 313 chemicals resulting from tank breathing still occur. Based on EPA's analysis, a small bulk terminal manages on average an annual throughput of 36.5 million gallons, and is estimated to process petroleum products in sufficient quantities to exceed the EPCRA section 313(f) reporting thresholds for all EPCRA section 313 listed toxic chemicals that are components of gasoline, No. 2 fuel oil/diesel, No. 6 fuel oil, and crude oil. In addition, EPA estimates that some bulk terminals will also exceed the EPCRA section 313(f) reporting thresholds for EPCRA section 313 listed toxic chemicals contained in petroleum additives (Ref. 20).

EPA estimates that reporting under EPCRA section 313 from this industry may result in 12,394 Form R reports annually submitted by 3,842 facilities. This number of facilities estimated to report represents 34 percent of all facilities identified within this industry group.

6. *Reporting considerations*. Based on EPA's analysis, many of the activities conducted by petroleum bulk stations and terminals meet the definition of manufacture, process, or otherwise use. EPA believes that current interpretations of manufacture, process, or otherwise use will apply directly to facilities operating in this industry segment with minimal inconsistencies.

EPA estimates the potential costs for reporting for the first year by this industry group to be $69.3 million and $40.7 million in subsequent years.

7. *Conclusions*. For the reasons identified above, EPA believes that facilities in the SIC code 5171 petroleum bulk stations and terminals satisfy the requirements of EPCRA section 313(b)(1)(B) because EPA believes that reporting for this industry group is relevant for the purposes of EPCRA section 313. Accordingly, EPA proposes to add this industry group to the list of industry groups required to report pursuant to EPCRA section 313 and the PPA section 6607.

D. Electric Utilities

EPA is proposing to require coal and oil-fired electric utility plants in SIC code 49 to report under EPCRA section 313. These facilities are classified in SIC code 4911 Electric Services, SIC code 4931 Electric and Other Services Combined, and SIC code 4939 Combination Utilities, Not Elsewhere Classified. EPA is requesting comment on whether to add SIC code 4960 Steam and Air Conditioning Supply. Although information is limited on this industry group, EPA expects the activities conducted by this industry group to be similar to those conducted in SIC codes 4911, 4931, and 4939.

Due to the fact that nuclear, hydroelectric, gas and other non coal/oil-fired electric generating stations do not use fuel containing EPCRA section 313 listed toxic chemicals, EPA is proposing to add only those facilities within this industry group which combust fuels containing EPCRA

section 313 listed toxic chemicals. While EPA recognizes that non coal/oil-fired electric generating stations may otherwise use EPCRA section 313 chemicals in maintenance, cleaning, and purifying operations, and that information on releases and other waste management data from these activities may have some value, these support activities are not the primary function of the facility. EPA also recognizes that generating facilities may switch fuels as part of normal operations, including switching between natural gas and other fossil fuels. Natural gas does not contain EPCRA section 313 listed toxic chemicals above *de minimis* concentrations, and EPA would not expect reporting to result from the combustion of natural gas. However, any facility which combusts coal or oil in whatever percentage of its fuel use, and whether for primary or back-up generation, would become a covered facility for purposes of EPCRA section 313, and be required to make a compliance determination. Thus, EPA has chosen, as a matter of prioritizing, to propose the addition of only coal and oil-fired plants at this time.

1. *Description of industry*. The electric services industry includes facilities which generate electricity with different fuels: fossil fuels (i.e., coal, oil and natural gas); gas turbines; internal combustion turbines; nuclear; hydroelectric; and other sources including geothermal, wind, and solar. The combination electric services industry includes electric generating facilities that receive 50 to 95 percent of their revenues from electricity sales. Both industries generate electricity primarily through the combustion of fossil fuels (Ref. 8).

2. *Summary of evaluation*. Based on EPA's evaluation of this industry, the Agency believes that electric generation routinely involves the manufacture, process, or otherwise use of EPCRA section 313 listed toxic chemicals and that the facilities within SIC code 49 which generate electricity by combusting coal and oil are likely to report information relevant to the purposes of EPCRA section 313. The present determination is consistent with current reporting guidance, and the application of existing thresholds and exemptions under EPCRA section 313. The Agency anticipates reporting of releases and other waste management information from facilities within this industry group.

3. *Chemicals associated with electric utilities*. A variety of chemicals are associated with electricity generation. Coal and oil used to generate electricity may include EPCRA section 313 listed toxic chemicals as constituents. Among the EPCRA section 313 listed toxic chemicals which may be found in coal and oil are polycyclic aromatic compounds, chlorine, benzene, toluene, ethylbenzene, manganese, xylene, nickel, biphenyl, and naphthalene. Also, the following EPCRA section 313 metals and their compounds may be found in coal and oil: beryllium, cadmium, selenium, antimony, arsenic, copper, lead, barium, chromium, vanadium, zinc, and mercury and their compounds. In addition, other EPCRA section 313 listed toxic chemicals may be present in maintenance, cleaning, and purification operations. These may include copper compounds, hydrazine, zinc compounds, hydrochloric and sulfuric acid (aerosols), brominated compounds, formic acid, ammonia, thiourea, methylene chloride, and ethylene glycol (Ref. 20).

4. *Manufacture, process or otherwise use activities involving EPCRA section 313 chemicals*. While differing in some important respects, all conventional steam electric generating stations rely on the same basic process. Fuel is ignited and burned within a boiler chamber composed of thousands of feet of water-filled tubes. The heat of combustion heats the water in the boiler tubes, creating high temperature and high pressure steam. The steam passes through turbines causing the turbine blades to rotate. A shaft connected to the turbine blades drives electric generators, yielding electric power. In this fashion, the chemical energy of the coal or oil is converted to heat energy through combustion, then to mechanical energy in the turbines, and finally to electrical energy in the generators. Transmission lines, substations, and switching stations channel generated electricity to various end users. A range of maintenance, cleaning, and purifying operations are also conducted (Ref. 8).

Electric services and combination electric utilities manufacture or otherwise use a variety of EPCRA section 313 listed toxic chemicals, as part of the combustion process and as part of maintenance, cleaning, and purification operations. The combustion of coal creates certain EPCRA section 313 listed toxic chemicals, including formaldehyde, hydrogen chloride, hydrochloric acid (aerosol), primary sulfates (including sulfuric acid aerosol), hydrogen fluoride, hydrofluoric acid, and the following metals and their compounds, arsenic, beryllium, cadmium, chromium, copper, lead, mercury, manganese, and nickel. Similarly, the combustion of fuel oil manufactures sulfuric acid aerosols, formaldehyde, and the following metals and their compounds, arsenic, beryllium, cadmium, chromium, copper, lead, mercury, manganese, nickel, and zinc. Since the inception of the program, EPA has interpreted ''manufacture'' to include coincidental production of a listed toxic chemical. Coincidental manufacture is the generation of a listed toxic chemical as a byproduct or impurity (53 FR 4504, February 16, 1988). In the combustion of coal and oil, metal compounds may be produced from either the parent metal or a metal compound contained in the coal or oil. This may or may not involve a change of valence state. A change in valence state results in the manufacture of a metal compound. Metal compounds which are produced in the combustion process are considered ''manufactured'' for purposes of EPCRA section 313. The *de minimis* concentration exemption does not apply to coincidental manufacture (see 53 FR 4504, Februry 16, 1988; see also Refs. 8 and 2). Thus, all quantities of the metal compound manufactured in the combustion process must be compared to the ''manufacture'' threshold.

Constituents of coal and oil fuels are otherwise used in the combustion process, including the EPCRA section 313 chemicals listed in the above section, since they are combusted as part of the fuel. Metal compounds may be manufactured by the oxidation of metals and metal compounds contained in the fuel. In addition, a variety of chemicals also listed in the above section are otherwise used in maintenance, cleaning, and purifying operations. For example, several EPCRA section 313 listed toxic chemicals are otherwise used in corrosion control such as copper compounds, hydrazine, and zinc compounds, with data from cooling tower waste blowdown streams of coal-fired boilers indicating that copper and zinc compounds may be used in large quantities (Refs. 8 and 20). In addition, brominated compounds, ammonia, hydrochloric acid or chlorine may be used to treat intake water. Further, the water-side or steam-side of the boiler (including the boiler tubes, superheater, and condenser) requires occasional cleaning. Formic acid, and thiourea may all be used, along with large volumes of abrasives. Ethylene glycol is also otherwise used in generating station chillers and in some instances is applied to coal to prevent coal piles from freezing (Refs. 8 and 20).

5. *Types of information anticipated*. EPA recognizes that fuel composition may vary, and that the quantity and chemical composition of the wastes produced from cleaning and maintenance operations is dependent on

plant-specific factors such as plant size, type of equipment used and age of equipment. Based on EPA's evaluation of this industry, the Agency believes that most section 313 chemicals present in coal and oil fuels that are combusted in these facilities are present in concentrations below *de minimis* levels. EPA anticipates limited reporting resulting from the use of EPCRA section 313 chemicals in combustion of coal. EPCRA section 313 listed toxic chemicals that are components of No. 2 fuel oil above the *de minimis* concentration limit that would be reported as used in combustion include biphenyl, napthalene, and members of the polycyclic aromatic compounds category. EPCRA section 313 listed toxic chemicals in No. 6 fuel oil above the *de minimis* concentration limit that would be reported as used in combustion include members of the polycyclic aromatic compounds category. EPA also anticipates reportable quantities of EPCRA section 313 listed toxic chemicals to be manufactured during combustion processes involving coal and oil. These include many of the metal compounds such as cadmium, chromium, and zinc compounds. Further, EPA believes that some EPCRA section 313 chemicals that are routinely manufactured or otherwise used at coal/oil-fired electric utility plants are not exempt under current EPCRA section 313 exemptions.

EPCRA section 313 chemicals, which EPA has preliminarily identified, that are manufactured or otherwise used above *de minimis* concentrations in reportable activities include sulfuric and hydrochloric acid aerosols, hydrofluoric acid, formaldehyde, chlorine, bromine, ethylene glycol, hydrazine, and copper. Based on EPA's evaluation of this industry, EPA anticipates reporting on releases and other waste management information relevant to the purposes of EPCRA section 313. This type of routine information regarding EPCRA section 313 chemicals is not publicly-available. Indications exist that routine releases occur at these facilities. This assessment is based on the identification of reported releases of EPCRA section 313 chemicals in other EPA data systems. EPA also believes that quantities of wastes containing EPCRA section 313 listed toxic chemicals are generated and may result in reporting of waste management information. Therefore, EPA reasonably anticipates that facilities in this industry may report information relevant to the purposes of EPCRA section 313 on releases and other waste management information.

EPA estimates that reporting under EPCRA section 313 from this industry may result in 4,175 Form R reports and 1,392 Toxic Chemical Release Certification Statements annually submitted by 974 facilities. This number of facilities estimated to report represents 31 percent of all facilities identified within this industry group.

6. *Reporting considerations.* Based on EPA's understanding of this industry, facilities possess a wide range of knowledge regarding the EPCRA section 313 chemicals involved in their activities. While coal/oil-fired facilities in SIC Code 4911 are clearly identified as coal/oil-fired facilities and thus would be subject to this proposed action, facilities in SIC codes 4931 and 4939 may also engage in combustion of waste to generate electricity. Any facility in these SIC codes which generates electricity through coal or oil combustion in any proportion would be subject to reporting requirements and must determine if reporting thresholds are exceeded. Facilities in SIC code 4911 engaged in electricity generation using gas, nuclear, hydroelectric electric or other sources such as solar and wind, are not subject to these reporting requirements.

EPA estimates the potential costs for reporting for the first year by this industry group to be $26.6 million and $16.6 million in subsequent years.

7. *Conclusions.* For the reasons identified above, EPA believes that facilities in the electric utilities industry in SIC codes 4911, 4931, 4939 satisfy the requirements of EPCRA section 313(b)(1)(B) because EPA believes that reporting for this industry group is relevant for the purposes of EPCRA section 313. Accordingly, EPA proposes to add this industry group to the list of industry groups required to report pursuant to EPCRA section 313 and the PPA section 6607.

E. Mining

1. *Exemption of extraction activities.* Mining facilities conduct two primary operations: extraction and beneficiation. Both operations may occur within the same facility. While EPA believes that activities associated with beneficiation include EPCRA section 313 reportable activities and will result in reports relevant to the purposes of EPCRA section 313, it has not reached a similar conclusion regarding extraction activities, particularly in regards to coal extraction. EPA interprets ''extraction'' for purposes of EPCRA section 313 to mean the physical removal or exposure of ore, coal, minerals, waste rock, or overburden prior to beneficiation, and encompasses all extraction-related activities prior to beneficiation. Included within these extraction activities is removal of spoil. ''Spoil'' is a non-technical term that refers to dirt removed from a mine site. While the term ''spoil'' apparently has different connotations from mine to mine, it is, in essence, considered a part of overburden. The typical extraction sequence includes the removal of any unconsolidated overburden followed by drilling, blasting, and mucking the broken ore and waste rock material. Extraction does not include beneficiation, coal preparation, mineral processing, *in situ* leaching or any further activities.

As a result of EPA's evaluation of coal mining, the Agency believes, based on currently available data, that facilities in this industry which conduct extraction-only activities would not conduct EPCRA section 313 reportable activities and are unlikely to submit reporting information. EPA bases this conclusion on its belief that EPCRA section 313 chemicals are not present above *de minimis* concentration levels during coal extraction, and the use of EPCRA section 313 chemicals in coal extraction activities in concentrations above *de minimis* is unlikely to occur. Beneficiation, or preparation, of coal, does however involve the use of EPCRA section 313 chemicals, and the Agency believes that reporting resulting from coal preparation activities is likely. Reporting requirements for coal mining facilities where no further processing occurs is likely to result in an unnecessary imposition of burden which would provide no additional EPCRA section 313 information. Therefore, EPA is proposing to exclude extraction activities, as defined above, conducted in SIC code 12 in all EPCRA section 313 reporting requirements. Facilities engaged in the extraction of coal only would not be required to make compliance determinations and report releases and other waste management information associated with these extraction activities. Facilities engaged in both extraction of coal and coal preparation would be required to perform compliance determinations, and, to the extent then necessary, report releases and other waste management information associated with coal preparation and any other activities outside of extraction that are conducted on-site. Facilities classified in SIC code 12 which engage in preparation only, and do not engage in any extraction on-site would also be required to perform compliance determinations and report on releases and other waste management activities. This exemption

would apply only to extraction as defined above, and not to beneficiation or any other activities conducted at facilities in this industry. Further, this exemption is proposed to apply only to extraction activities in SIC code 12, and not activities that occur in SIC code 10 metal mining. EPA is requesting comment on this exemption of extraction activities conducted in SIC code 12 from the EPCRA section 313 reporting requirements.

EPA is also requesting comment regarding whether this exemption should be applied to metal mining extraction as well. Data and information concerning EPCRA section 313 chemical activity in metal mining extraction activities are limited. EPA believes that metal mining extraction and coal mining extraction are similar types of operations, and that the use of EPCRA section 313 chemicals in concentrations above *de minimis* during extraction is also unlikely in both industries. Specifically, EPA does not have information indicating that typical overburden would contain EPCRA section 313 chemicals in concentrations above *de minimis* levels. Further, based on EPA's understanding of metal mining operations at this time, EPA would not expect these operations to have a great deal of knowledge regarding the constituents present in overburden. During the comment period, EPA may receive information confirming or refuting this understanding. If, as EPA suspects, overburden does not typically contain EPCRA section 313 chemicals above *de minimis* concentrations, there would be little or no reporting associated with the removal of overburden. In the event EPA extends the coal extraction exemption to metal mining, the issue of ''spoil,'' or reporting on overburden, becomes moot.

On the other hand, the composition of extracted material is different in metal mining and coal mining. EPA believes that EPCRA section 313 chemicals are often present above *de minimis* concentrations in metal ore. Consequently, these facilities, which typically also conduct beneficiation on site, may have EPCRA section 313 chemicals present in reportable volumes during extraction as well as during beneficiation. EPA is requesting comment on whether the exemption of extraction activities, including removal of overburden, should also be applied to metal mining extraction in SIC code 10.

2. *Metal mining.* EPA is proposing to require facilities engaged in metal mining to report under EPCRA section 313. This proposed requirement is limited to facilities in SIC Code 10 (Metal Mining) except SIC Code 1081 Metal Mining Services. Facilities in SIC code 1081 do not conduct reportable activities; activities performed by firms in SIC code 1081 primarily consist of contracted services for mining operations in the other SIC codes.

a. *Description of industry.* The metal mining industry includes facilities engaged primarily in exploring for metallic minerals, developing mines, and ore mining. Metal bearing ores are valued chiefly for the metals they contain, which are recovered for use as such, or as constituents of alloys, chemicals, pigments, or other products. This industry also includes all ore dressing and beneficiating operations, whether performed at mills operated in conjunction with the mines served, or at mills, such as custom mills, operated separately. These include mills which crush, grind, wash, dry, sinter, calcine, or leach ore, or perform gravity separation or flotation operations (Refs. 4 and 6). EPA's Office of Solid Waste has produced a series of *Technical Resource Documents* on extraction and beneficiation of ores and minerals. These documents have been included in the public docket for reference.

Although this SIC code includes all metal ore mining, the scope of mining industries with a significant domestic presence is concentrated in iron, copper, lead, zinc, gold, and silver. Metals generated from U.S. mining operations are used domestically in a wide range of manufactured products, including automobiles, electrical and industrial equipment, jewelry, and photographic materials (Ref. 16).

b. *Summary of evaluation.* Based on EPA's evaluation of this industry, the Agency believes that beneficiation activities routinely involve the manufacturing, processing or otherwise use of EPCRA section 313 chemicals and that the facilities within this SIC code are likely to report information relevant to the purposes of EPCRA section 313. The present determination is consistent with current reporting guidance, and the application of existing thresholds and exemptions under EPCRA section 313. The Agency anticipates reporting of releases and other waste management information from facilities.

c. *Chemicals associated with metal mining.* A wide variety of chemicals are found at mining facilities in SIC code 10. Various EPCRA section 313 listed metals and metal compounds are found in the ores that are mined and beneficiated. The nature of the ore that is mined by a particular facility is extremely site specific. Further, although relatively standardized processes are used to recover the target metal(s) from ores at various types of mines, the chemicals used in these recovery processes by specific facilities (both in type and quantity) are strongly influenced by the nature of the ore and of the recovery process used.

Based on EPA's evaluation of this industry, it believes that the EPCRA section 313 chemicals associated with the metal mining industry which may be expected to be reported under this proposed action include constituents of ore such as copper, antimony, silver, lead, zinc, cadmium, mercury, chromium, manganese, and nickel and their compounds; flotation reagents such as cyanide compounds, copper sulfate, and zinc sulfate; agglomeration agents such as chlorine; elution acids such as nitric acid; electrowinning agents such as cyanide compounds and lead nitrate; and beneficiation agents such as cyanide compounds (Refs. 6, 16, 18, and 20).

d. *Manufacture, process or otherwise use activities involving EPCRA section 313 chemicals.* Metal mining includes extraction and beneficiation steps during the preparation of a specific metal concentrate. Extraction involves the removal or exposure of the ore from surface and underground deposits prior to beneficiation. The typical extraction sequence includes the removal of any unconsolidated overburden followed by drilling, blasting, and mucking the broken ore and waste rock material.

Beneficiation is the preparation of a specific metal concentrate. The purpose of beneficiation is to concentrate the sought after metal in the ore by separating the values from the other materials in the ore (Ref. 6). The most common beneficiation methods include gravity concentration, milling and floating, leaching, dump leaching, and magnetic separation (Refs. 6 and 16). EPA interprets ''ore beneficiation'' for purposes of EPCRA section 313 to mean the preparation of ores to regulate the size of the product, to remove unwanted constituents, or to improve the quality, purity, or grade of a desired product. (Ref. 16) Under regulations drafted pursuant to the Resource Conservation and Recovery Act (RCRA, 40 CFR 261.4), beneficiation is restricted to the following activities: crushing; grinding; washing; dissolution; crystallization; filtration; sorting; sizing; drying; sintering; pelletizing; briquetting; calcining to remove water and/or carbon dioxide; roasting; autoclaving, and/or chlorination in preparation for leaching; gravity concentration; magnetic separation; electrostatic separation; flotation; ion exchange; solvent extraction; electrowinning; precipitation; amalgamation; and heap,

dump, vat, tank, and in situ leaching. (40 CFR 261.4) EPA's interpretation of ''beneficiation'' for EPCRA section 313 purposes should be read consistent with the RCRA definition and guidance.

Beneficiation of ore is, in essence, the preparation of the constituents of the ore. In many mining operations, such as lead, silver, and copper, the primary metal is a constituent of the ore (i.e. lead, silver, and copper) and is a toxic chemical. There may be other constituents of the ore that are also toxic chemicals. Because beneficiation of the ore is preparation of the constituents, any beneficiation of ore containing toxic chemicals is also preparation of all of the toxic chemical constituents. If the preparation of the toxic chemical constituent is for distribution in commerce, the toxic chemical is ''processed'' for purposes of EPCRA section 313.

In addition, other EPCRA section 313 chemicals may be otherwise used during the beneficiation operations. For example, cyanide leaching, using solutions of sodium and potassium cyanides as leaching agents, to extract gold from gold ore, represents an otherwise use of EPCRA section 313 chemicals.

e. *Types of information anticipated*. EPA recognizes that the nature of the ore mined and the preparation of its constituents is site-specific and therefore variable.

EPA's evaluation of this industry indicates that facilities routinely handle large volumes of EPCRA section 313 chemicals and that there is reason to believe that routine releases occur based on data in existing EPA data systems. For example, releases to air of toxic chemicals including arsenic, antimony, lead, and copper were reported in EPA's AIRS-AFS data base. EPA reasonably anticipates, therefore, that facilities in this industry may report information on releases and other waste management consistent with the purpose of EPCRA section 313. As a result, information on the presence, management, and releases of toxic chemicals will be available to interested communities, governments, and individuals, that was previously unavailable to the public.

EPA estimates that reporting under EPCRA section 313 from this industry may result in 1,176 Form R reports annually by 328 facilities. This number of facilities estimated to report represents 31 percent of all facilities identified within this industry group.

f. *Reporting considerations*. Because the activities in this industry, particularly beneficiating, are similar to processing activities performed in currently covered facilities, no new guidance is required to enable facilities in this industry to comply with EPCRA section 313 reporting requirements.

EPA estimates the potential costs for reporting for the first year by this industry group to be $6.5 million and $3.8 million in subsequent years.

g. *Conclusions*. For the reasons identified above, EPA believes that facilities in the metal mining industry in SIC code 10 except SIC code 1018 satisfy the requirements of EPCRA section 313(b)(1)(B) because EPA believes that reporting for this industry group is relevant for the purposes of EPCRA section 313. Accordingly, EPA proposes to add this industry group to the list of industry groups required to report pursuant to EPCRA section 313 and the PPA section 6607.

3. *Coal mining*. EPA is proposing to require establishments engaged in coal mining to report under EPCRA section 313. This proposed requirement is limited to establishments in SIC code 12 Coal Mining except SIC code 1241 Coal Mining Services. EPA does not believe that SIC code 1241 includes facilities which conduct reportable activities or routinely handle large volumes of EPCRA section 313 chemicals.

a. *Description of industry*. The coal mining industry includes establishments primarily engaged in producing bituminous coal, anthracite, and lignite. Included are mining operations and preparation plants (also known as cleaning plants and washeries), whether or not such plants are operated in conjunction with mine sites (Ref. 7). Coal is extracted from surface and underground mines; production from surface mines is increasing as production from underground mines decreases. The sequence of steps in coal production is similar to metal mining and includes extraction and beneficiation. Facilities in these SIC codes may manufacture, process, or otherwise use EPCRA section 313 chemicals when conducting blasting activities; extraction of coal and impurities; and preparation activities, including cleaning to reduce ash and sulfur content, washing, crushing, screening, and loading (Ref. 20).

b. *Summary of evaluation*. Based on EPA's evaluation of this industry, the Agency believes that beneficiation and processing operations performed in coal preparation plants routinely involve manufacturing, processing, or the otherwise use of EPCRA section 313 chemicals and that the facilities within this SIC code are likely to report information relevant to the purposes of EPCRA section 313. The present determination is consistent with current reporting guidance, and the application of existing thresholds and exemptions under EPCRA section 313. The Agency anticipates reporting of releases and other waste management information from facilities in this industry.

c. *Chemicals associated with coal mining*. There are three sources of EPCRA section 313 chemicals in SIC code 12: (1) EPCRA section 313 chemicals that are commonly found in coal; (2) EPCRA section 313 chemicals that are subsequently used during the coal preparation process; and (3) EPCRA section 313 chemicals incidental to coal production, e.g., explosives, acid mine drainage. Metals and minerals present in coal may include antimony, arsenic, barium, cadmium, chromium, copper, lead, manganese, mercury, nickel, selenium, silver, vanadium (fume or dust), and zinc (fume or dust) and their compounds. Chemicals used during coal preparation may include tetrachloroethylene, 1,1,1-trichloroethane, phenanthrene, dichlorodifluoromethane, xylene, and ethylene glycol. Chemicals incidental to coal production include ammonium nitrate and fuel oil, used for explosives. Fuel oil may contain EPCRA section 313 chemicals as constituents.

Based on EPA's evaluation of this industry, the Agency believes that the EPCRA section 313 chemicals associated with coal mining which may be expected to be reported under this proposed action are primarily associated with coal preparation plants and would include tetrachloroethylene, 1,1,1-trichloroethane, phenanthrene, dichlorodifluoromethane, xylene, and ethylene glycol (Ref. 20).

d. *Manufacture, process, or otherwise use activities involving EPCRA section 313 chemicals*. Coal beneficiation, also known as coal preparation, is the process of upgrading raw coal using physical methods to improve the energy value and remove impurities such as pyrite and non-coal mineral material. It is intended to produce a standardized product and reduce ash and sulfur content. The extent of upgrading is determined by the intended end use and compliance with emission standards (Ref. 7). Coal is crushed and slurried with water at coal preparation plants to separate organics from inorganic impurities. The inorganic impurities are denser than the combustible, organic fraction of the coal, and the density difference is used to separate the inorganic fractions using cyclones and dense-medium tanks. Flotation tanks are also used to remove pyrite from finely ground coal. The coal-water slurry is introduced into a series of flotation cells spragged with air from below. Alcohols are used to create a froth, and kerosene

or diesel fuel is added to collect the coal into the froth, leaving the pyrite behind. At the completion of the cleaning steps, the coal is dried using hot gases from a coal burning furnace.

While the possibility exists that the coincidental manufacture of EPCRA section 313 chemicals may occur as a result of chemical reactions during either extraction or beneficiation operations, EPA has not identified instances where this occurs routinely. EPA, as part of its evaluation of this industry, has not determined that processing, as defined in EPCRA section 313, routinely occurs for EPCRA section 313 listed toxic chemicals above *de minimis* concentrations. However, EPA has identified routine activities involving EPCRA section 313 toxic chemicals. Beneficiation of coal routinely involves the otherwise use of EPCRA section 313 chemicals to aid in separating coal from impurities during coal preparation processes. The use of these chemicals during the beneficiation, or preparation, activities described above constitute the otherwise use of chemicals. EPA believes, based on its evaluation, that these activities will be the primary source of EPCRA section 313 information from these facilities.

e. *Types of information anticipated*. Based on EPA's evaluation of this industry, the Agency believes that coal mining facilities routinely handle large volumes of EPCRA section 313 chemicals and that there is reason to believe that routine releases occur based on data in existing EPA data systems. For example, routine releases to air were reported in EPA's Aerometric Information Retrieval System (AIRS) Facility Subsystem (AFS) of ethylene glycol and dichlorodifluoromethane for facilities in SIC code 12 (Ref. 18). EPA reasonably anticipates, therefore, that facilities in this industry will report information on releases and other waste management activities of EPCRA section 313 chemicals such as tetrachloroethylene, xylene, and ethylene glycol. As a result, information on the presence, management and releases of toxic chemicals will be available to interested communities, governments, and individuals, that was previously unavailable to the public.

EPA estimates that reporting under EPCRA section 313 from this industry may result in 642 Form R reports annually submitted by 321 facilities. This number of facilities estimated to report represents 10 percent of all facilities identified within this industry group.

f. *Reporting considerations*. Because the activities conducted by facilities within this industry sector, particularly coal preparation or beneficiation, are similar to manufacturing, processing, and otherwise use activities performed in currently covered facilities, no new guidance is required to enable facilities in this industry to comply with EPCRA section 313 reporting. There may be activities other than those discussed here that should be examined by a reporting facility for reporting purposes. For example, although coal contains EPCRA section 313 constituents, EPA believes that these constituents generally exist in concentrations below *de minimis* levels, and therefore may be exempt from reporting as the constituents are further processed with the coal. However, in the event that coal preparation plants process a product other than coal, for further distribution in commerce, and that product contains EPCRA section 313 chemicals above *de minimis* concentrations, the facility may need to file a Form R for that chemical.

EPA estimates the potential costs for reporting for the first year by this industry group to be $5.4 million and $2.5 million in subsequent years.

g. *Conclusion*. For the reasons identified above, EPA believes that facilities in the coal mining industry in SIC code 12 except SIC code 1241 satisfy the requirements of EPCRA section 313(b)(1)(B). Accordingly, EPA proposes to add this industry group to the list of industry groups required to report pursuant to EPCRA section 313 and the PPA section 6607.

F. RCRA Subtitle C Hazardous Waste Facilities

EPA is proposing to require facilities regulated under RCRA Subtitle C that are classified in SIC code 4953 to report under EPCRA section 313.

1. *Description*. Facilities operating in SIC code 4953 that are regulated under RCRA subtitle C (the primary federal law addressing hazardous waste mangement), are engaged primarily in the collection, transportation, treatment for destruction, stabilization, and/or disposal of RCRA subtitle C hazardous waste. These facilities include incinerators, underground injection facilities, waste treatment plants, landfills, and other facilities designed for the treatment for destruction, stabilization, and disposal of hazardous waste.

2. *Summary of evaluation*. EPA has determined that facilities regulated under RCRA subtitle C that are classified in SIC code 4953 conduct activities that routinely involve the management of EPCRA section 313 chemicals. Based on EPA's revised interpretation of activities considered as otherwise use as discussed in Unit IV. of this preamble, EPA believes that facilities regulated under RCRA Subtitle C that are classified in SIC code 4953 manage as waste a substantial volume of EPCRA section 313 chemicals. Under the revised otherwise use interpretation articulated in Unit IV. of this preamble, amounts of section 313 chemicals treated for destruction, stabilization, or disposal would be considered otherwise use for purposes of threshold determinations and the amounts released or managed as a waste would be subject to reporting under EPCRA section 313, provided that the appropriate EPCRA section 313(f) threshold is met.

3. *Chemicals associated with the industry*. Facilities regulated under RCRA subtitle C that are classified in SIC code 4953 manage an extremely large number and quantity of EPCRA section 313 chemicals. The EPCRA section 313 list of toxic chemicals includes 195 specifically listed chemicals that are also regulated as hazardous waste under RCRA (40 CFR 261.33(e) and 40 CFR 261.33(f)). The EPCRA section 313 list of toxic chemicals also contains two chemical categories that are also regulated under the RCRA program. Therefore, the number of EPCRA section 313 chemicals that may be managed and potentially reported by facilities within this industry group is rather large.

4. *Manufacture, process, or otherwise use activities involving EPCRA section 313 chemicals*. Facilities regulated under RCRA subtitle C that are within SIC code 4953 receive waste containing section 313 chemicals for the purposes of storage, treatment for destruction, stabilization, and disposal. These facilities manage a substantial amount of EPCRA section 313 chemicals contained in waste. While these activities result in the generation of and in limited cases may include the use of EPCRA section 313 chemicals, the vast majority of section 313 chemicals managed by these facilities are in the amounts managed as waste.

As stated in Unit IV. of this preamble, EPA is modifying its interpretation of ''otherwise use'' to include the treatment for destruction, stabilization, or disposal of EPCRA section 313 chemicals. Given this interpretation, most of the activities conducted by facilities regulated under RCRA subtitle C that are in SIC code 4953 will be considered otherwise use. In addition, some EPCRA section 313 listed toxic chemicals may be coincidentally manufactured in the treatment of hazardous waste streams (Ref. 20).

Some EPCRA section 313 listed toxic chemicals that may be manufactured, processed, or otherwise used by facilities in this industry group include: hydrochloric acid, hydrofluoric acid and sulfuric acid (aerosol), which may be coincidentally manufactured during some treatment for destruction activitives; chlorine, which is used in some treatment operations (Ref. 20); and numerous other chemicals otherwise used under EPA's revised interpretation, such as chlorobenzene, dichlorobenzene, formaldehyde, and metals (e.g., lead) and their compounds.

5. *Types of information anticipated*. Congress created EPCRA section 313 to provide a unique function—to make multimedia information on releases of toxic chemicals and other waste management activities readily available to communities. Although at that time, existing statutes provided some information, sponsers of EPCRA section 313 recognized that existing information did not serve the need of providing publicly available information on releases and other waste management activities of toxic chemicals in a consistent and comprehensive format for all media.

> EPA and the states currently collect much of [the information to be collected by the section], and a number of states and cities have instituted similar inventories... However, many states and the EPA do not have so-called multimedia inventories. The information may be scattered in air files, water files and on RCRA manifest forms,...but not pulled together in one place to provide a complete and usable picture of total environmental exposure. (Senator Lautenberg, Ref. 11).

Similarly, the sponsors also recognized that industries that were the initial focus of EPCRA section 313 (i.e., facilities in SIC codes 20 through 39) were already subject to extensive regulations, but determined that these industries should be included in those initially subject to EPCRA section 313 reporting.

> With respect to the contents of the toxic release inventory form, estimates of releases into each environmental medium must be provided. This shall include any releases into the air, water, as well as releases from waste treatment and storage facilities. This should include all releases of toxic chemicals in surface waters whether or not such releases are pursuant to Clean Water Act permits. Similarly, all toxic chemicals dumped into and disposal facilities must be reported whether or not such facilities are regulated under the Resource Conservation and Recovery Act. (Congressman Edgar, Congressional Record, p. 15316-15317 October 8, 1986)

While EPA recognizes that facilities regulated under RCRA subtitle C are subject to considerable regulation, EPA believes that requiring these facilities to report under EPCRA section 313 does not constitute a significant overlap with other regulations. Although the permitting process makes some chemical management information on a facility-specific basis available to the public, the type of information collected from facilities regulated under RCRA subtitle C is typically at the waste stream level and not at the constituent-specific level. This is very different from the type of information collected under EPCRA section 313. The information collected under EPCRA section 313 is chemical-specific and in contrast to RCRA data is designed to be used by the public.

EPA has been encouraged to consider the addition of waste treatment and disposal facilities to EPCRA section 313 since the initial passage of the statute. Comments received on the proposed rule (53 FR 4504) to implement EPCRA section 313 reporting included strong support for the addition of the commercial waste treatment industry. Given the purpose of EPCRA section 313 (providing the public with information on toxic chemicals), EPA believes it is appropriate to expand the focus of the TRI program to include information from facilities that treat for destruction, stabilize, and/or dispose of toxic chemicals. Certainly, facilities regulated under RCRA subtitle C are locations where substantial quantities of concentrated toxic chemicals are collected, and treated for destruction, stabilized, and/or disposed. As discussed above, Congress intended that the information provided by EPCRA section 313 reporting would include releases from waste treatment and disposal facilities regardless of whether these releases were permitted or not. Therefore, it is EPA's belief that the inclusion of RCRA subtitle C facilities operating within SIC code 4953 under EPCRA section 313 reporting requirements is appropriate and will add significantly to the information that is available on how and where toxic chemical wastes are released and managed.

As stated above, facilities regulated under RCRA subtitle C that are within SIC code 4953 manage a large number of EPCRA section 313 chemicals, often in large quantities. The types of treatment activities and concentrations of chemicals in waste received will greatly affect the types and amounts of section 313 chemicals released or managed as a waste from any particular facility. As a whole, EPA anticipates that facilities operating in this industry group will contribute more release and management information on a per facility basis than any other industry group currently reporting or being proposed for addition by this rulemaking.

EPA estimates that reporting under EPCRA section 313 from this industry may result in 6,637 Form R reports and 74 Toxic Chemical Release Certification Statements annually by 164 facilities. This number of facilities estimated to report represents 100 percent of all facilities identified within this industry group.

6. *Reporting consideration*. EPA's revised interpretation of ''otherwise use'' can significantly impact the information reported by facilities within this industry group. See Unit IV.D. of this preamble for reporting examples.

EPA estimates the potential costs for reporting for the first year by this industry group to be $31.2 million and $21.5 million in subsequent years.

The Agency believes it is important to provide the public with TRI information from the hazardous waste management industry. However, the Agency recognizes that facilities in this industry present specific issues with regard to reporting under EPCRA section 313. Placement of a toxic chemical into a RCRA hazardous waste landfill is reported as a release under EPCRA section 313, even though disposal of hazardous waste in that landfill is a permissible waste management activity under RCRA. Through its outreach efforts in developing this proposal, EPA discussed the hazardous waste management industry's concerns with the differing perceptions of the term ''release.'' Although RCRA does not define the term ''release,'' some may perceive that term, when used in the RCRA context, to indicate failure of the hazardous waste management unit, such as a landfill. For TRI purposes, EPCRA section 329 defines ''release'' to mean ''spilling, leaking, pumping, pouring, emitting, emptying, discharging, injecting, leaching, dumping, or disposing into the environment (including the abandonment or discarding of barrels, containers, and other closed receptacles) of any hazardous chemical, extremely hazardous substance, or toxic chemical.'' Disposal includes underground injection, placement in landfills/surface impoundments, land treatment, or other intentional land disposal. (See ''Toxic Chemical Release Inventory Reporting Instructions'' (1995 version) at p. 35 for a list of activities to be reported under ''Transfers Off-site for Purposes of Disposal.'')

The Agency is mindful of the concern that TRI release information involving

hazardous waste management activities not be misleading. For example, the public should not construe a release into a landfill reported under EPCRA section 313 to mean that a landfill has failed. In developing the final rule, EPA will consider approaches to assist the public in understanding the proper meaning of reporting data from the hazardous waste management industry. EPA requests comment on approaches to address this concern.

Although facilities that receive hazardous waste are provided with information on the constituents of that hazardous waste, these facilities may be provided with limited information on EPCRA section 313 listed chemicals and the exact quantities of those constituents. EPA requests comment on the quantity of constituents, difficulty and costs of reporting, and ways to aid facilities in reporting under EPCRA section 313, in the least burdensome manner, on those constituents that are EPCRA section 313 listed toxic chemicals.

7. *Conclusion*. For the reasons identified above, EPA believes that those RCRA subtitle C facilities in SIC code 4953 satisfy the requirements of EPCRA section 313(b)(1)(B) because EPA believes that reporting for this industry sector is relevant for the purposes of EPCRA section 313. Accordingly, EPA proposes to add this industry group to the list of industry groups required to report pursuant to EPCRA section 313 and the PPA section 6607.

G. Solvent Recovery Services

EPA is proposing to require facilities engaged in solvent recovery operations to report under EPCRA section 313. These facilities are classified in SIC code 7389 Business Services, not elsewhere classified, that are primarily engaged in solvent recovery activities.

1. *Description of the industry*. Solvent recovery is the act of removing contaminants and reconditioning a previously used industrial solvent to a form suitable for reuse. Solvent recovery is a beneficial activity that ultimately reduces wastes and the demand for raw materials. However, the activities used to recover solvents may result in significant releases and other waste management activities involving EPCRA section 313 chemicals.

Many facilities are engaged in solvent recovery, in part due to the widespread use of solvents, the value of the material, and the technologies available. Most facilities conducting solvent recovery operations are primarily engaged in other activities, making the number of facilities primarily engaged in solvent recovery relatively few. Many facilities identified as operating within the manufacturing sector conduct solvent recovery operations and may currently report under EPCRA section 313 those releases and waste management activities that result from their solvent recovery operations (Ref. 20).

2. *Summary of evaluation*. Based on EPA's evaluation of facilities primarily engaged in solvent recovery operations, the Agency believes their associated activities routinely involve the manufacturing, processing, or otherwise use of EPCRA section 313 listed toxic chemicals. This determination is consistent with current reporting guidance and the application of existing exemptions under EPCRA section 313. EPA anticipates reporting of releases and other waste management information from facilities primarily engaged in solvent recovery operations.

3. *Chemicals associated with the industry*. Solvents appropriate for recovery include alcohols, aliphatics, aromatics, chlorinated hydrocarbons, chloroflorocarbons, ketones, and other flammable and non-flammable compounds. Many solvents commonly recovered are also EPCRA section 313 listed toxic chemicals and include carbon tetrachloride, chloroform, methanol, methyl ethyl ketone, methylene chloride, perchloroethylene, toluene and xylene. Industrial uses of solvents typically result in the introduction of chemical contaminants such as pigments, ink, resin, oil, grease, metals and dirt. A number of processes are used to separate contaminants to recover the economically beneficial solvent. These include distillation, stripping, thin-film evaporation and extraction. The type of process applied is generally dependent on the solvent and type of contamination (Ref. 10).

4. *Manufacture, process, or otherwise use activities involving EPCRA section 313 chemicals*. The recovery of an EPCRA section 313 listed toxic chemical from a mixture for further distribution or commercial use is processing of that chemical. This is the primary function of most solvent recovery businesses.

The type of separation method(s) applied by some facilities may also involve the otherwise use of EPCRA section 313 listed toxic chemicals. Under current EPCRA section 313 guidance, the use of a chemical to react with another chemical constitutes a use (provided the first chemical does not become incorporated and distributed in commerce). In addition, some of the contaminants contained in a spent solvent mixture may also include EPCRA section 313 chemicals. The disposal of a listed toxic chemical removed from the spent solvent is the otherwise use of that toxic chemical under the revised interpretation articulated in this rulemaking (see Unit IV. of this preamble).

5. *Types of information anticipated*. Based on the type of process used, various releases of solvent, contaminant, and chemicals used to aid in the recovery of the solvent may occur. Releases can include: light ends or vapors from process units or solvent holding tanks, heavy ends or still bottoms and sludge, and oil from various other process units. Other wastes such as descaling solutions and caustic streams are generated during routine maintenance and feed stock switch over operations. Some of these wastes generated may contain section 313 chemicals and are generated or are used in quantities large enough that reporting may result. Some of these chemicals are carbon tetrachloride, perchloroethylene, and xylene. While EPA's proposed broader interpretation of ''otherwise use'' may capture the disposal of spent toxic chemicals, based on EPA's analysis, contaminants removed from spent solvent mixtures are not likely to be present in quantities that would exceed reporting thresholds, and subsequently no reports are expected on these chemicals (Ref. 20). In addition, based on EPA's analysis, the process of recovering spent solvents is considered to be most economical when preformed on a larger scale, and therefore, it is estimated that all operations primarily engaged in solvent recovery will process enough of one or more of the EPCRA section 313 chemicals identified in Unit V.G.3. of this preamble to exceed reporting thresholds (Ref. 10).

EPA estimates that reporting under EPCRA section 313 from this industry may result in 85 Form R reports annually submitted by 17 facilities. This number of facilities estimated to report represents 43 percent of all facilities identified within this industry group.

6. *Reporting consideration*. While EPA wishes to encourage alternatives to disposal such as recycling, the Agency believes that the releases and waste management information resulting from facilities primarily involved in solvent recovery operations should be made publicly available. EPA believes that the activities conducted by facilities primarily engaged in solvent recovery are very similar if not identical to solvent recovery activities conducted by currently reporting facilities and that statutory reporting definitions, as well as reporting guidance, will directly apply to these operations.

EPA estimates potential costs for reporting for the first year by this industry group to be $0.4 million and $0.3 million in subsequent years.

7. *Conclusions.* For the reasons identified above, EPA believes that facilities that are primarily engaged in solvent recovery operations in SIC code 7389 satisfy the requirements of EPCRA section 313 (b)(1)(B) because EPA believes that reporting for this industry group is relevant for the purposes of EPCRA section 313. Accordingly, EPA proposes to add this industry group to the list of industry groups required to report pursuant to EPCRA section 313 and the PPA section 6607.

VI. Request for Public Comment

EPA requests comment on any aspect of this proposal. In particular, EPA requests specific comment as detailed in the following paragraphs.

EPA requests comment on the information considered for each of the industry groups proposed for addition in Unit V. of this preamble. In addition, EPA requests comment on any issues that may be specific to any of the individual industry groups.

EPA is requesting comment on the use of the criteria used in today's proposal for listing decisions for the EPCRA section 313 program.

EPA requests comment on the sufficiency of the evidence and any additional information for each of the industry groups proposed for addition. In addition, EPA requests comment on any issues that may be specific to any of the individual industry groups.

EPA requests comment on the exemption for extraction activities under the coal mining industry sector. EPA is also requesting comment regarding whether this exemption should be applied to metal mining extraction as well.

EPA is requesting comment on requiring reporting from those facilities in SIC code 4953 that have interim status under RCRA subtitle C.

EPA is requesting comment on whether to add SIC code 4960 Steam and Air Conditioning Supply. Although information is limited on this industry group, EPA expects the activities conducted by this industry group to be similar to those conducted in SIC codes 4911, 4931, and 4939.

The Agency is mindful of the concern that TRI release information involving hazardous waste management activities not be misleading. For example, the public should not construe a release into a landfill reported under EPCRA section 313 to mean that a landfill has failed. In developing the final rule, EPA will consider approaches to assist the public in understanding the proper meaning of reporting data from the hazardous waste management industry. EPA requests comment on approaches to address this concern.

Although facilities that receives hazardous waste are provided with information on the constituents of that hazardous waste, these facilities may be provided with limited information on the exact quantities of those constituents. EPA requests comment on ways to aid facilities in reporting under EPCRA section 313, in the least burdensome manner, on those constituents that are EPCRA section 313 listed toxic chemicals.

EPA requests comment on the alternatives to reduce impacts on small facilities in SIC code 5169 and facilties regulated under RCRA subtitle C that are classified within SIC code 4953. EPA requests comment on whether any of the alternatives presented in this proposed rule would accomplish the stated objective of EPCRA section 313 while minimizing significant impact on small entities.

For the industry groups outside of SIC codes 20 through 39 which are not part of today's proposal, EPA requests comment on adding any of these industry groups through a future rulemaking. Commenters should take into account the current limitations of EPCRA section 313 reporting requirements, i.e., exemptions and thresholds, in addressing whether these industries should be required to report under EPCRA section 313.

EPA requests comment on all aspects of the Agency's broadening of the concept of ''otherwise use.'' Specifically, EPA requests comment on (1) the Agency's proposed modification of the reporting guidance for ''otherwise use,'' (2) whether the regulatory definition of ''otherwise use'' should be amended, (3) the Agency's alternate approach to modifying the reporting guidance for ''otherwise use;'' and (4) the number of facilities in SIC codes 20 through 39 that may be affected by EPA's alternate approach to modifying the reporting guidance for ''otherwise use.''

EPA requests comment on its revised interpretation as explained by these examples, and by the additional examples described in the document entitled *Interpretive Guidance for Revised Interpretation of Otherwise Use*. This document is in the public docket.

EPA requests comment on whether the treatment for destruction, stabilization, and disposal fit within the statutory definition of ''process.''

Comments should be submitted to the address listed under the ADDRESSES section. All comments must be received on or before August 26, 1996.

VII. Rulemaking Record

A record has been established for this rulemaking under docket number ''OPPTS–400104'' (including comments and data submitted electronically as described below). A public version of this record, including printed, paper versions of electronic comments, which does not include any information claimed as confidential business information (CBI), is available for inspection from noon to 4 p.m., Monday through Friday, excluding legal holidays. The public record is located in the TSCA Nonconfidential Information Center, Rm. NE-B607, 401 M St., SW., Washington, DC 20460.

Electronic comments can be sent directly to EPA at:

ncic@epamail.epa.gov

Electronic comments must be submitted as an ASCII file avoiding the use of special characters and any form of encryption.

The official record for this rulemaking, as well as the public version, as described above will be kept in paper form. Accordingly, EPA will transfer all comments received electronically into printed, paper form as they are received and will place the paper copies in the official rulemaking record which will also include all comments submitted directly in writing. The official rulemaking record is the paper record maintained at the address in ''ADDRESSES'' at the beginning of this document.

VIII. Public Meeting

EPA will hold two 1-day public meetings, one in San Francisco, CA and one in Washington, DC, to discuss the issues presented above. The tentative agenda for this public meeting will include a discussion of the issues presented in Unit VII. of this preamble. Specific information on these public meetings are contained in a notice of public meeting published elsewhere in this issue of the Federal Register.

IX. Economic Analysis

EPA has prepared an economic analysis of the impact of this action, which is contained in a document entitled *Economic Analysis of the Proposed Rule to Add Certain Industries to EPCRA Section 313* (Ref. 20). This document is available in the public docket for this rulemaking. The analysis assesses the costs, benefits, and associated impacts of the rule, including potential effects on small business and the environmental justice implications

of the rule. The major findings of the analysis are briefly summarized here.

A. Market Failure

Federal regulations are used to correct significant market failures. Markets will fail to achieve socially efficient outcomes when differences exist between market values and social values. Two of the causes of market failure are externalities and information asymmetries. In the case of negative externalities, the actions of one economic entity impose costs on parties that are ''external'' to the market transaction. For example, entities may release toxic chemicals without accounting for the consequences to other parties, such as the surrounding community. The market may also fail to efficiently allocate resources in cases where consumers lack information. Where information is insufficient regarding toxic releases, individuals' choices regarding where to live and work may not be the same as if they had more complete information. Since firms ordinarily have a disincentive to provide complete information on their releases of toxic chemicals, the market fails to allocate society's resources in the most efficient manner. This proposed rule is intended to correct the market failure created by the lack of information available to the public about the releases and transfers of toxic chemicals in their communities, and to help address the externality created when choices regarding toxic chemical releases and transfers have not fully considered external effects.

Through requiring the provision of data on toxic chemical releases and waste management practices, TRI overcomes firms' disincentive to provide information on their toxic chemical releases. TRI serves to inform the public of the toxic chemical releases in their communities. Individuals can then make choices that better optimize their well-being. Some choices made by a more informed public, including consumers, corporate lenders, and communities, may effectively lead firms to internalize into their business decisions at least some of the costs to society of their releases. In addition, by identifying hot spots, setting priorities and monitoring trends, TRI data can also be used to make more informed decisions regarding the design of more efficient regulations and voluntary programs, which moves society towards an optimal allocation of resources.

If EPA were to take no action, i.e., not add industries to TRI, the market failure (and the associated social costs) resulting from the lack of information on releases and waste management practices would continue. EPA believes that adding the proposed industry groups to the EPCRA section 313 list of facilities will improve the scope of multi-media data on releases and transfers of toxic chemicals. This, in turn, will provide information to communities, empower communities to play a meaningful role in environmental decision-making, improve the quality of environmental decision-making by government officials, and provide useful information to facilities themselves. EPA believes that this is a sound rationale for proposing the addition of industry groups to the EPCRA section 313 list.

B. Existing Reporting Requirements

The Toxics Release Inventory includes multimedia data on releases, transfers and pollution prevention activities for over 600 toxic chemicals. While there are no national data bases that are comparable to the whole of TRI, several data sources exist that contain media-specific data on releases and transfers. Sources maintained by EPA include the AIRS Facility Subsystem (AFS) of the Aerometric Information Retrieval System (AIRS), which tracks air emissions from industrial plants; the Permit Compliance System (PCS), which tracks permit compliance and enforcement status of facilities regulated by the National Pollutant Discharge Elimination System (NPDES) under the Clean Water Act; and the Biennial Reporting System (BRS), maintained by the Office of Solid Waste and Emergency Response (OSWER). Other sources include the chemical inventory data collected under section 312 of EPCRA and Clean Air Act Title V operating permits.

TRI data cannot be replicated using these alternative sources. Even if information from these data bases could be combined to form an analog of the data contained in TRI, none of these sources provides release and transfer or pollution prevention data that could replace the data reported on TRI. In addition, these other data collections differ in the information collected, the chemical and facility coverage, the various thresholds and reporting frequencies, and how the data are reported. The definitional consistency provided by TRI creates important advantages over any emissions data system that might be assembled from non-TRI sources. These other data sources perform the functions for which they were designed, but they were not intended to serve the same purposes as TRI. For all these reasons, EPA has concluded that while there may be some degree of overlap between the reporting required under EPCRA section 313 and PPA section 6607 and that required under other statutes, these reporting requirements do not duplicate or conflict with each other.

C. Regulatory Alternatives

EPA evaluated a number of options in the course of developing this proposed rule. The options were created by varying the scope of the expansion (i.e., choosing alternative industry groups) and modifying selected structural elements of the program (i.e., modifying the guidance for otherwise use, changing the *de minimis* exemption for certain industries under consideration, etc.). This analysis was based on the options under consideration before the completion of the screening process described in Unit II.C. and II.D. of this preamble. The following alternatives summarize the scope of EPA's analysis.

Alternative I.A

Comprehensive industry coverage. Includes the following industries at the 2-digit SIC code level: mining; transportation; electric, sanitary and gas services; and wholesale trade. Also includes solvent recovery services. Maintains current interpretation of otherwise use.

Alternative I.B

Same industries as Alternative I.A, but with revised interpretation of otherwise use.

Alternative II.A

Limited industry coverage, with a mix of 2-digit and 4-digit SIC codes. Includes the following industries: metal mining; coal mining; electric services, electric and other services combined; combination utilities; commercial hazardous waste treatment; storage and disposal facilities that are RCRA subtitle C facilities; chemical and allied products - wholesale; and petroleum bulk stations and terminals - wholesale. Also includes solvent recovery services. Maintains current interpretation of otherwise use.

Alternative II.B

Same industries as Alternative II.A, but with revised interpretation of otherwise use.

Alternative III.A:

Modified limited industry coverage. A mix of 2-digit and 4-digit SIC codes, with certain exemptions and limitations. Includes the following industries: metal mining, excluding mining services; coal mining, excluding mining services and extraction activities; coal- and oil-fired electric utilities; commercial hazardous waste treatment, storage and disposal facilities that are RCRA subtitle C facilities; chemical and allied products - wholesale; petroleum bulk stations and

terminals - wholesale; and solvent recovery services. Maintains current interpretation of otherwise use.

Alternative III.B

Same industries as Alternative III.A, but with revised interpretation of otherwise use. This is the proposed alternative.

Alternative IV.A

Same industries as Alternative I.A, but with limited reporting from mines. The threshold determination for those toxic chemicals being extracted or mined would be required only for the primary product distributed in commerce.

Alternative IV.B

Same industries as Alternative I.A, but with expanded reporting from mines. Mining and extraction of ore would be interpreted as manufacturing, not processing, so that the *de minimis* exemption would not apply to other constituents in the ore.

Alternative V

Same industries as Regulatory Alternative I.A, but with expanded reporting from electric utilities. The *de minimis* exemption would not be applied to constituents of fuels at electric utilities.

Table I in Unit XI of this preamble provides a summary of the number of facilities estimated to submit reports under EPCRA section 313, the number of reports they are anticipated to submit, and the associated costs under each regulatory alternative. Costs are lower after the first year because facilities will be familiar with the reporting requirements, and many will be able to update or modify information reported on the previous year's report instead of originating data for the first time. See Unit XI.C. of this preamble for more information on costs for different compliance tasks under EPCRA section 313.

In proposing this rule, EPA has sought to balance the right of the public to know about releases and other generation of toxic chemicals as waste in their neighborhoods and the benefits provided by the expanded knowledge with the costs which the rule will impose on industry, including the impact on small entities.

D. Proposed Alternative

Table II in Unit XI of this preamble displays the results by industry for the proposed option (which is Alternative III.B in Unit IX.C.). EPA estimates that a total of 6,400 facilities will submit 38,000 reports, which include both Form Rs and Toxic Chemical Release Inventory Certification Statements (see 59 FR 61488, November 30, 1994). Total incremental compliance costs are also presented in Table II by industry sector. As shown, aggregated costs in the first year are estimated to be $191 million; in subsequent years they are estimated to be $118 million per year.

EPA's quantitative analysis does not include the effect on facilities in SIC codes 20 through 39 of changing the guidance for otherwise use to include disposal, stabilization, and treatment for destruction. As indicated in Unit IV.D. of this preamble, EPA does not believe that this change in guidance will affect the EPCRA section 313 reporting status of a significant number of facilities in the manufacturing sector. Facilities in the manufacturing sector may be affected if they receive wastes from other facilities, manage these wastes through treatment or disposal and do not manufacture, process or otherwise use the chemicals under current definitions, or do so below the reporting threshold. The Agency is requesting comment on the extent to which the revised interpretation may affect facilities that currently report on TRI.

EPA will incur additional costs for adding new industry groups under EPCRA section 313. These costs include developing policy and guidance for the new industries, providing outreach and training, processing the reports that are submitted, disseminating the resulting information and performing compliance and enforcement audits. The total costs to EPA are estimated to be $2.7 million per year.

E. Associated Requirements

There are various state and federal requirements that are triggered by other statutes and regulations when a facility files a report under EPCRA section 313. The associated requirements include state taxes and fees, state pollution prevention planning requirements, and special requirements for certain NPDES storm water permits. While these associated requirements are discussed in the economic analysis, they are not costs of the proposed rule, and are not treated as such in the analysis.

Sixteen states have fees, taxes or pollution prevention requirements associated with the requirement to file a Form R. EPA's economic analysis includes a conservative estimate that the proposed rule could result in total payments of $1 million to $8 million per year in fees and taxes by affected facilities. It is important to note that these fees and taxes do not necessarily equate with social costs, since payments that do not result in the consumption of a resource (e.g., labor) are transfer payments and do not represent costs to society. Insufficient information was available to classify the fee payments as either social costs or transfer payments. Nor did EPA attempt to estimate the benefits of these fees and taxes (which are used in some states to fund technical assistance programs and grants, and which may also result in a more efficient allocation of resources in and of themselves by working as economic incentives to reduce emissions).

Although the state fees, taxes and pollution prevention planning requirements are associated with EPCRA section 313 reporting, they are not required by this rulemaking. EPA has not included the costs or benefits of associated state requirements along with the costs and benefits of the rule, because it is inappropriate to do so. States which have these requirements may wish to assess the benefits and costs of applying them to new industries.

EPA has also established associated requirements for some facilities applying for certain storm water permits under the NPDES program. These NPDES storm water permit requirements are based on the coverage of EPCRA section 313 at the time the permits were issued. The NPDES requirements do not apply to industries or chemicals that are added to the EPCRA section 313 list until the time of permit renewal (which occurs every 5 years), and may not apply in subsequent permits, depending on the Agency's decisions at the time those permits are issued.

EPA has not estimated the aggregate costs of the associated requirements for new facilities. It would also be inappropriate to making a listing determination under EPCRA section 313 on the basis of these NPDES requirements. There will be no impact at the current time, because there will be no changes to the NPDES requirements while the current permits are in effect. Moreover, the costs and benefits of the special requirements are best considered when the NPDES storm water permits are reissued, and a decision can be made on whether they should be applied in subsequent permits.

F. Benefits

In enacting EPCRA and PPA, Congress recognized the significant benefits of providing information on toxic chemical releases. TRI has proven to be one of the most powerful forces in empowering the federal government, state governments, industry, environmental groups and the general public to fully participate in an informed dialogue about the environmental impacts of toxic chemicals in the United States. TRI's publicly available data base provides

quantitative information on toxic chemical releases, transfers, recycling, and treatment. With the collection of this information starting in 1987 came the ability for the public, government, and the regulated community to understand the magnitude of chemical emissions in the United States, and to assess the need to reduce these releases and transfers. TRI enables all interested parties to establish credible baselines, to set realistic goals for environmental progress over time, and to measure progress in meeting these goals over time. The TRI system has become a neutral yardstick by which progress can be measured by all stakeholders.

The proposed rule to expand the number and type of reporting facilities subject to TRI is intended to build upon the past success of the program. The information reported to TRI increases knowledge of the levels of toxic chemicals released to the environment and the pathways of exposure, improving scientific understanding of the health and environmental risks of toxic chemicals; allows the public to make informed decisions on where to work and live; enhances the ability of corporate leaders and purchasers to more accurately gauge a facility's potential environmental liabilities; provides reporting facilities with information on unregulated emissions that can be used to save money as well as reduce emissions; and assists federal, state, and local authorities in making better decisions on acceptable levels of toxics in communities.

There are two types of benefits associated with TRI reporting — direct and follow-on. The first type of benefit is direct, the pure value of information on releases, transfers and other waste management practices. It is expected that this rulemaking will generate benefits by providing the public with access to information that otherwise would not be available to them. The direct benefits of the rule itself include improvements in access, understanding, awareness and decision-making related to the provision and distribution of information.

The second types of benefit derive from changes in behavior that result from the information reported to TRI. The changes in behavior, including reductions in the releases and changes in the waste management practices for toxic chemicals, yield health and environmental benefits. These changes in behavior come at some cost to industry, and the net benefits of the follow-on activities are the difference between the benefits of decreased chemical releases and transfers and the costs of the actions needed to achieve the decrease. These follow-on activities, however, are not required by the rule.

Because the current state of knowledge about the economics of information is not highly developed, EPA has not attempted to monetize the pure information benefits of adding new industry groups to the list of industries required to report to TRI. Furthermore, because of the inherent uncertainty in the chain of events, EPA has also not attempted to predict the changes in behavior that result from the information, or the resultant net benefits (i.e., the difference between benefits and costs). EPA does not believe that there are adequate methodologies to make reasonable monetary estimates of either type of benefits.

Rather, EPA assessed the potential for the proposed rule to generate benefits comparable to those generated by the currently reporting industries by seeking data on certain characteristics of releases and other waste management activities, specifically air release data, which could be compared among the various sectors currently subject to, and proposed for, addition to EPCRA section 313.

EPA analyzed release data collected under authority of the Clean Air Act and maintained in the Aerometric Information Retrieval System (AIRS). The analysis compared estimated air releases of toxic chemicals from manufacturing facilities (currently subject to TRI reporting) to those from facilities proposed for addition to EPCRA section 313. While limitations in the data set and methodology did not permit estimates of potential TRI releases to be developed, the analysis clearly indicated that substantial volumes of TRI chemical releases will be captured by expanding the coverage to include the additional industry groups being proposed. EPA believes this evidence supports its preliminary determination that the industry groups proposed for addition are likely to generate useful information as part of the TRI program. The experience of the past seven years shows that reporting on TRI by manufacturing facilities has produced real gains in understanding about exposure to toxic chemicals. EPA believes that reporting by the industry groups being proposed for addition will yield similar benefits.

X. References

1. D B. *Standard Industrial Classification Manual SIC 2+2*. Dun and Bradstreet Information Services, (1988).

2. GAO/RCED. *Report to Congress Toxic Chemicals: EPA's Toxic Release Inventory Is Useful but Can Be Improved*, Government Accounting Office, Washington, DC, 91-121, (1991).

3. MADEP. *Data Submitted by Non-Manufacturing Facilities in Massachusetts in 1993*. Massachusetts Department of Environmental Protection, Boston, MA (1993).

4. OMB. *Standard Industrial Classification Manual 1987*. Executive Office of the President, Office of Management and Budget, Washington, DC, (1987).

5. SAIC. *Data Analysis Documentation - All Systems (Draft)*. Science Applications International Corporation, Falls Church, VA (1996).

6. SAIC. *SIC Code Profile 10 Metal Mining (Draft)*. Science Application International Corporation, Falls Church, VA (1996).

7. SAIC. *SIC Code Profile 12 Coal Mining (Draft)*. Science Application International Corporation, Falls Church, VA (1996).

8. SAIC. *SIC Code Profile 49 Electric, Gas and Sanitary Services (Draft)*. Science Application International Corporation, Falls Church, VA (1996).

9. SAIC. *SIC Code Profile 50-51 Wholesale Trade Durable and Nondurable Goods (Draft)*. Science Application International Corporation, Falls Church, VA (1996).

10. SAIC. *SIC Code Profile 73 Business Services (Draft)*. Science Application International Corporation, Falls Church, VA (1996).

11. U.S. Congress. *Congressional Record, Senate Debate on Passage*, Vol. 131 (1985).

12. U.S. Congress. *Congressional Record, Debate Prior to Passage of House Bill*, Vol. 132 (1985).

13. U.S. Congress, House of Representatives. *Conference Report No. 962*. 99th Cong., 2nd Session (1986).

14. USDOC. *County Business Patterns 1993: United States*. Department of Commerce, Bureau of the Census, Washington, DC, BP-93-1 (1995).

15. USEPA/OAR. *Report to Congress: Waste from Combustion of Coal by Electric Utilities*. U.S. Environmental Protection Agency, Washington, DC (1988).

16. USEPA/OECA. *Office of Compliance Sector Notebook Project: Profile of the Metal Mining Industry*. U.S. Environmental Protection Agency, Washington, DC, 310-R-95008, (1995).

17. USEPA/OPPT. *Additional Considerations in Selecting Industries for Addition to EPCRA Section 313*. U.S. Environmental Protection Agency, Washington, DC (1986).

18. USEPA/OPPT. *Appendix B: Routinely Reported Information - Chemical Detail*. U.S. Environmental Protection Agency, Washington, DC (1996).

19. USEPA/OPPT. *Development of SIC Code Candidates: Screening Document*. U.S. Environmental Protection Agency, Washington, DC (1996).

20. USEPA/OPPT. *Economic Analysis of the Proposed Rule to Add Certain Industries to EPCRA Section 313*. U.S. Environmental Protection Agency, Washington, DC (1996).

21. USEPA/OPPT. *EPCRA Section 313 Otherwise Use Activities*. U.S. Environmental Protection Agency, Washington, DC (1986).

22. USEPA/OPPT. *Toxic Chemical Release Inventory Reporting Form R and Instructions (Revised 1995 Version)*. U.S. Environmental Protection Agency, Washington, DC, 745-K-96-001, (1996).

23. USEPA/OSWER. *Report to Congress: Wastes from the Extraction and Beneficiation of Metallic Ores, Phosphate Rock, Asbestos, Overburden from Uranium Mining, and Oil Shale*. U.S. Environmental Protection Agency, Washington, DC (1985).

XI. Regulatory Assessment Requirements

A. Executive Order 12866

Pursuant to Executive Order 12866 (58 FR 51735, October 4, 1993), it has been determined that this is a ''significant regulatory action'' because the proposed action is likely to have an annual effect of $100 million or more. This action was submitted to OMB for review, and any comments or changes made during that review have been documented in the public record.

B. Regulatory Flexibility Act

Pursuant to the Regulatory Flexibility Act (5 U.S.C. 601 et seq.), the Agency must consider whether a regulatory action will have a significant adverse economic impact on a substantial number of small entities. Section 605(b) requires the Agency to either certify that a proposed regulatory action will not have such an impact or prepare an initial regulatory flexibility analysis. EPA has prepared an Initial Regulatory Flexibility Analysis (IRFA), which is included as part of the economic analysis for the proposed rule (Ref. 20). The IRFA is summarized below.

1. *Methodology*. In preparing the IRFA for this proposal, EPA has defined small business as any firm having 10 to 49 employees, instead of using the Small Business Administration's (SBA's) definition of 500 employees or less. Under the Regulatory Flexibility Act (RFA), agencies have been authorized to develop and apply alternative definitions of small business where appropriate and after providing the public with notice of and an opportunity to comment on the alternative, in consultation with the SBA. For TRI purposes, EPA adopted the alternative definition of 10-to-49 employees in proposing and promulgating the original TRI reporting rule in 1987-88 (see 52 FR 21166, 53 FR 4523 and accompanying regulatory impact analyses).

For today's proposal, EPA has applied the 10-to-49 employee definition to maintain consistency in IRFA analyses across TRI rulemakings. Nonetheless, the economic analysis prepared for the proposal also includes alternative definitions of small entities, consistent with the definition used by the Small Business Administration (SBA). Economic impacts on small entities were calculated assuming that all TRI reports are Form Rs (and not Toxic Chemical Release Inventory Certification Statements), which yields a conservative estimate of costs (i.e., it is likely to overestimate the true impacts). Impacts were calculated in both the first year of reporting and in subsequent years.

The Agency estimates that of the 6,400 facilities potentially affected by the proposed rule, no more than 72 percent are small entities. Thus, approximately 4,600 of the 6,400 facilities potentially affected may need to file at least one report. However, approximately 15,000 small entities in the industry groups being proposed would not have to file a report because they are expected to have less than 10 full-time employees, and thus would be exempt from the requirement to file a report. The overwhelming majority of these entities are small businesses as defined above (10 to 49 employees). A small number of small entities are utilities owned by small governmental jurisdictions. For purposes of this analysis, EPA has considered small entities by industry sector, including governmentally-owned utilities together with private utilities.

To assess the potential impacts on these small entities of expanding the TRI program to additional industry groups, EPA first conducted a preliminary screening analysis. The screening analysis used compliance costs as a percentage of annual company sales to measure potential impacts. This methodology was based on the premise that the cost impact percentage is a good measure of a firm's ability to afford the costs attributable to a regulatory change. For purposes of screening small entity impacts, comparing compliance costs to revenues provides a reasonable first-order indication of the magnitude of the regulatory burden relative to a commonly available measure of a company's business volume. Where regulatory costs represent a very small fraction of a typical firm's revenue (for example, less than 1 percent), the financial impacts of the regulation are expected to be minimal. EPA is currently in the process of considering how to define the RFA statutory terms ''significant impact'' and ''substantial number.'' Until EPA determines how best to define those terms, the Agency has decided for this proposal to prepare an initial regulatory flexibility analysis if compliance costs for a substantial number of small entities would be greater than 1 percent of sales.

Detailed analyses of certain SIC codes were conducted when the screening analysis indicated the proposed rule would cross the analytical thresholds stated above for potentially affected industry groups. The methodology for each respective detailed analysis was tailored to reflect the unique characteristics of each industry group examined.

Based on the screening analysis, and where appropriate on more detailed analyses, EPA identified one group for which an initial regulatory flexibility analysis would be justified, the chemical wholesaling industry (SIC code 5169 - Chemicals Allied Products). Because there are sufficient uncertainties regarding the impacts on another industry, RCRA subtitle C hazardous waste facilities in SIC code 4953, EPA is also requesting comment on the magnitude and incidence of the impacts on this industry and the need for and appropriateness of adopting regulatory alternatives like those described for SIC code 5169. For all other potentially affected industry groups, EPA found the likely impact of the proposed rule either would be compliance costs less than 1 percent of sales or may not affect a substantial number of small entities, or both.

Today's action describes the reporting and recordkeeping requirements associated with the proposal. The professional skills needed to comply with those requirements are the same as those required to comply with current TRI reporting requirements. Those skills were described in the regulatory flexibility analyses for the 1988 TRI reporting rule and today's proposal.

2. *SIC code 5169*. Because facilities in SIC code 5169 are chemical wholesalers, they handle large numbers of chemicals, including toxic chemicals listed under EPCRA section 313. Facilities in this industry are expected to report primarily due to mixing, blending, reformulating and repackaging of EPCRA section 313 chemicals. EPA

estimates that about 10 percent of chemical wholesalers will be required to submit reports and that reporting facilities will file between 1 and 27 reports each. The actual number of reports per facility will be distributed throughout this range. Based on the revenue data for typical facilities, impacts above 1 percent are predicted for facilities reporting the high number of reports in the first year, and for small businesses reporting the high number of reports in subsequent years. However, EPA believes that relatively few businesses in this industry will file the high number of reports. The compliance costs associated with EPCRA section 313 reporting could have a potentially significant impact on the smaller and less financially solvent companies in this industry. The majority of companies, however, will not have to submit the maximum number of reports, and will face lower costs.

3. *Alternatives to reduce impacts on small businesses in SIC code 5169.* Because of the potential for significant impacts on a substantial number of facilities in SIC code 5169, EPA's economic analysis includes a number of alternatives to reduce the impact on small businesses in this industry. While the Agency could have elected not to propose the addition of SIC code 5169, thereby avoiding any small business impacts from this proposed rule to facilities in that group, the Agency has chosen to include the industry group in the proposal. EPA believes that reporting from this industry group will result in a significant amount of new toxic chemical release information to the public, particularly to communities in which these facilities are located. Moreover, the activities of this industry--handling chemicals--and its involvement with TRI chemicals are very similar to those of the manufacturing universe already subject to TRI reporting.

The alternatives EPA analyzed to reduce the impact on small businesses are described below.

Alternative 1. Expand eligibility for the alternate threshold (59 FR 61488, November 30, 1994) for facilities in SIC code 5169 by increasing the annual reportable amount from 500 pounds and raising the alternate manufacture, process and otherwise use threshold from 1 million pounds. Some small facilities in SIC 5169 with large numbers of reports may still incur significant impacts to determine their eligibility for the alternate threshold. EPCRA section 313(f)(2) requires that any revision to the current reporting thresholds continue to capture a substantial majority of total releases of each listed chemical or chemical category. Because these facilities have not reported under TRI in the past, the Agency may not have sufficient information about releases (both types of chemicals and release levels) with which to justify expanding the alternate threshold eligibility for this industry group. In addition, because of the type of information submitted on the Toxic Chemical Release Certification Statement, the resulting data would be of more limited utility than the data that would otherwise be reported on Form R.

Alternative 2. Allow facilities in SIC code 5169 an additional year before they must begin reporting. EPA would use this time to perform intensive outreach, training and technical assistance to industry. This alternative would result in the loss of 1 year's worth of data, in return for a relatively modest reduction in reporting burden.

Alternative 3. Require facilities in SIC code 5169 to report only on air releases and off-site transfers. State data indicate that these two routes account for nearly all of the releases and transfers from facilities in SIC code 5169. Adopting this option would mean forfeiting some information that is reported pursuant to EPCRA section 313 and all additional information reported pursuant to the PPA section 6607. This option, therefore, appears to be inconsistent with the existing authorities and requirements under EPCRA section 313 and PPA section 6607. Further, to the extent that facilities in this industry actually report only air releases and off-site transfers under the current requirements, EPA has overestimated both compliance costs and small business impacts in the standard analysis.

Alternative 4. Expand the range reporting option for facilities in SIC code 5169 beyond the current 1,000 pound limit to a higher level such as 2,000, 5,000 or 10,000 pounds. Adopting this alternative would reduce the precision of the data in return for a relatively modest reduction in reporting burden.

Alternative 5. Require facilities in SIC code 5169 to report on their throughput for each chemical and on the types of processes and equipment being used. EPA would then combine this information with emission factors to develop release and transfer estimates. This alternative would reduce the reporting burden, because facilities in this industry are presumed to track their throughput and could readily identify the activities and types of equipment used. However, the resulting release data would be of reduced utility to the public, because they would be based on average emission factors and would not be specific to an individual facility. Finally, this option appears to be inconsistent with the existing authorities and requirements under EPCRA section 313 and PPA section 6607.

Alternative 6. Exempt small businesses in SIC 5169 from reporting. The overwhelming majority of businesses in this industry are small; however, it is anticipated that a significant portion of reported releases would be from small businesses. Adopting this option could lead to substantial gaps in information, especially at the community level. Furthermore, only those small firms submitting a large number of reports may face significant impacts. By contrast, this alternative would substantially reduce the amount of information available without targeting the relief to those particular facilities facing high impacts (i.e., those submitting a large number of reports).

EPA is seeking comment on the alternatives to reduce impacts on small facilities in SIC code 5169. EPA requests comment on whether any of the alternatives would accomplish the stated objective of EPCRA section 313 while minimizing a potential economic impact on small entities.

4. *RCRA Subtitle C Facilities in SIC Code 4953.* The screening analysis indicated that TRI reporting by facilities in SIC code 4953 may impose a compliance costs of more than one percent of sales on some small facilities in this SIC code if EPA revises the guidance on otherwise use to include disposal, stabilization, and treatment for destruction. EPA is not highly confident of the accuracy of the estimated number of reports per facility if the guidance on otherwise use is revised, and believes that the current figure is an over-estimate. Consequently, the actual number of reports submitted by facilities in SIC code 4953 and the costs to prepare and submit them may be considerably lower than estimated by the screening analysis. Furthermore, relatively few of the facilities in this industry group are small businesses according to the definition EPA has used to develop this analysis (i.e., less than 50 employees). Recognizing this uncertainty, EPA is particularly interested in comments and data related to these issues. EPA will consider alternatives, similar to those considered for SIC code 5169, if there is sufficient reason to believe that requiring RCRA subtitle C facilities to report on TRI would impose a significant burden on a substantial number of small entities. EPA seeks comment on this issue.

5. *Conclusions*. EPA has determined that this regulatory action may impose an adverse impact on small entities in SIC code 5169 (Chemicals and Allied Products Wholesale). EPA currently has insufficient information to determine the impact on affected RCRA subtitle C facilities in SIC code 4953 that are small entities. This action would not be expected to have a significant impact on a substantial number of small entities in the remainder of the industries being proposed. Information relating to this determination has been provided to the Chief Counsel for Advocacy of the Small Business Administration, and is included in the docket for this rulemaking. Any comments regarding the economic impacts that this proposed regulatory action may impose on small entities should be submitted to the Agency at the address listed above.

C. Paperwork Reduction Act

The information collection requirements in this proposed rule, as well as Form R have been submitted for approval to the Office of Management and Budget (OMB) under the Paper Work Reduction Act, 44 U.S.C. 3501 *et seq*. An Information Collection Request (ICR) document that covers the burden associated with today's proposal has been prepared by EPA (ICR No. 1784.01) and a copy may be obtained from Sandy Farmer, OPPE Regulatory Information Division; U.S. Environmental Protection Agency (2136); 401 M St., S.W.; Washington, DC 20460, by calling (202) 260-2740, or electronically by sending an e-mail message to ''farmer.sandy@epamail.epa.gov.'' If necessary, EPA may be augmenting the docket with additional information.

This information would be collected from industrial facilities in local communities in order to provide basic information to those communities and the general public, as well as the regulated community and all levels of government, on releases and other waste management practices involving listed toxic chemicals. Collection of this data would further EPA's goal of enhancing community right-to-know. Provision of this information would be mandatory, pursuant to EPCRA section 313 (42 U.S.C. 11023) and PPA section 6607 (42 U.S.C. 13106). Regulations codifying the EPCRA section 313 reporting requirements can be found at 40 CFR part 372. Respondents may designate the specific chemical identity of a substance as a trade secret, pursuant to EPCRA section 322 (42 U.S.C. 11042). Regulations codifying the trade secret provisions can be found at 40 CFR part 350. Currently, approximately 23,000 facilities report on TRI.

EPA's economic analysis includes burden and cost estimates for specific compliance tasks under EPCRA section 313 (Ref. 20). Such tasks include rule familiarization, completion of Form Rs and Toxic Chemical Release Inventory Certification Statements and recordkeeping. Total burden and cost can be calculated by combining these estimates with the number of affected facilities and reports predicted. The five component tasks are described below. The ICR submitted to OMB provides burden and cost estimates for those facilities proposed for addition in today's proposed rule.

1. *Compliance determination*. Facilities must determine whether they meet the criteria for section 313 reporting. Costs attributed to making this determination result from time required to become familiar with the definitions, exemptions, and threshold requirements under the TRI program, to review the list of EPCRA section 313 chemicals, and to conduct preliminary threshold determinations in order to determine if the facility would be required to report. These costs are also applied to facilities that would not be required to report, but that would incur some cost to ascertain that fact. Thus, the number of facilities undertaking compliance determination activities exceeds the number of reporting facilities.

2. *Rule familiarization*. Facilities that would be reporting under section 313 for the first time must read the reporting package and become familiar with the reporting requirements. This would involve reading the instructions to the Toxic Chemical Release Inventory Reporting Form R, and may also involve other activities such as consulting EPA guidance documents. Costs for rule familiarization would only be incurred in the first year after a facility becomes subject to reporting, since in subsequent years the staff would be familiar with the requirements that apply to their facility.

3. *Calculations and report completion*. Facilities that determine they must report under section 313 would incur costs to retrieve, process, review, and transcribe information to complete Form R. Facilities qualifying for the alternate reporting threshold may file a Toxic Chemical Release Inventory Certification Statement, a streamlined form containing limited informational requirements, which is estimated to require less burden and cost to complete than Form R. Report completion costs would be somewhat higher in the first year of reporting, relative to subsequent years. In many instances the process in subsequent years would consist of updating data and modifying the information reported on the previous year's report, rather than originating or retrieving data for the first time.

4. *Recordkeeping*. Following completion of the appropriate report, additional labor costs are incurred for record keeping, which would allow a facility to use past information in making calculations in subsequent years.

Table III lists the estimated average burden and cost for each of the tasks in the first year of reporting. Table IV describes the average burden and costs in subsequent years. Economies of scale for facilities filing multiple reports have not been estimated. The time estimates used by EPA are average values. As with any average, some facilities will be above the average and others will be below it. EPA recognizes that large, complex facilities may require more than the average time to comply. However, there are many other facilities subject to the rule that are not large or complex. These facilities will often have a simpler compliance process. EPA believes that its time estimates represent reasonable averages.

For Form R, the industry reporting burden for collecting this information (including recordkeeping) is estimated to average 74 hours per report in the first year, at a cost of $4,587. In subsequent years, the burden is estimated to average 52.1 hours per report at a cost of $3,023. For a Toxic Chemical Release Inventory Certification Statement, the burden is estimated to average 49.4 hours per report in the first year at a cost of $3,101. In subsequent years, the burden is estimated to average 34.6 hours per report at a cost of $2,160.

These estimates include the time needed to review instruction; search existing data sources; gather and maintain the data needed; complete and review the collection of information; and transmit or otherwise disclose the information. The actual burden to a specific facility may deviate from this estimate depending on the complexity of the facilitys operations and the profile of the releases at the facility.

The proposed rule would result in an estimated 6,428 additional respondents submitting an estimated total of an additional 33,463 Form Rs and 4,251 Toxic Chemical Release Inventory Certification Statements. This results in a total hour burden of 3.1 million hours in the first year and 1.9 million hours in subsequent years, at a total cost of $191 million in the first year and $119 million in subsequent years.

Burden means the total time, effort, or financial resources expended by persons

to generate, maintain, retain, or disclose or provide information to or for a Federal agency. This includes the time needed to review instructions; develop, acquire, install, and utilize technology and systems for the purposes of collecting, validating, and verifying information, processing and maintaining information, and disclosing and providing information; adjust the existing ways to comply with any previously applicable instructions and requirements; train personnel to be able to respond to a collection of information; search data sources; complete and review the collection of information; and transmit or otherwise disclose the information.

An Agency may not conduct or sponsor, and a person is not required to respond to a collection of information unless it displays a currently valid OMB control number. The OMB control numbers for EPA's regulations are listed in 40 CFR part 9 and 48 CFR chapter 15.

Comments are requested on the Agency's need for this information, the accuracy of the provided burden estimates, and any suggested methods for minimizing respondent burden, including through the use of automated collection techniques. Send comments on the ICR to the EPA at the address provided above, with a copy to the Office of Information and Regulatory Affairs, Office of Management and Budget, 725 17th St., N.W., Washington, DC 20503, marked ''Attention: Desk Officer for EPA.'' Please remember to include the ICR number in any correspondence.

The collection of information and other requirements under section 313 of EPCRA and section 6607 of the PPA on the Form R are covered under OMB approval number 2070-0093, which was issued on May 14, 1992. Although this approval normally would have expired on November 30, 1992, it remains in effect until further Agency action pursuant to the 1993 Department of Veterans Affairs and Housing and Urban Development and Independent Agencies Appropriations Act, Pub. L. 102-389, signed October 6, 1992, which states that:

> Notwithstanding the Paperwork Reduction Act of 1980 or any requirements thereunder the Environmental Protection Agency Toxic Chemical Release Inventory TRI Form R and instructions, revised 1991 version issued May 19, 1992, and related requirements (OMB No. 2070-0093), shall be effective for reporting under section 6607 of the Pollution Prevention Act of 1990 (Public Law 101-508) and section 313 of the Superfund Amendments and Reauthorization Act of 1990 (Public Law 99-499) until such time as revisions are promulgated pursuant to law.

Facilities subject to this proposed rule also would be eligible to submit a certification statement under the Toxic Release Inventory Certification Statement. The Office of Management and Budget (OMB) has approved the information collection requirements for the Toxic Release Inventory Certification Statement under the provisions of the Paperwork Reduction Act, 44 U.S.C. 3501 et seq. and has assigned OMB control number 2070-0143 (EPA ICR No. 1704).

These ICR approvals for currently reporting facilities remains in effect until further Agency action.

D. Unfunded Mandates Reform Act and Executive Order 12875 Unfunded Mandates Reform Act

Title II of the Unfunded Mandates Reform Act of 1995 (UMRA), Pub. L. 104-4, establishes requirements for Federal agencies to assess the effects of their regulatory actions on state, local, and tribal governments and the private sector. Under section 202 of UMRA, EPA must generally prepare a written statement, including a cost-benefit analysis for proposed and final rules with ''Federal mandates'' that may result in expenditures by state, local, and tribal governments, in the aggregate, or by the private sector, of $100 million or more in any 1 year. Before promulgating an EPA rule for which a written statement is needed, section 205 of UMRA generally requires EPA to identify and consider a reasonable number of regulatory alternatives and adopt the least costly, most cost-effective, or least burdensome alternatives that achieves the objectives of the rule. The provisions of section 205 do not apply when they are inconsistent with applicable law. Moreover, section 205 allows EPA to adopt an alternative other than the least costly, most cost-effective, or least burdensome alternative if the Administrator publishes with the final rule an explanation of why the alternative was not adopted. Before EPA establishes any regulatory requirements that significantly or uniquely affect small governments, including tribal governments, it must have developed under section 203 of UMRA, a small government agency plan. The plan must provide for notifying potentially affected small governments, enabling officials of affected small governments to have meaningful and timely input into the development of the regulatory proposals with significant Federal intergovernmental mandates, and informing, educating, and advising small governments on compliance with the regulatory requirements.

EPA has determined that this proposed rule is likely to contain a Federal mandate that may result in expenditures of $100 million or more for the private sector in any 1 year. EPA has prepared, under section 202 of the UMRA, a written statement, entitled ''Unfunded Mandates Reform Act Statement on Federal Mandate Imposed by the Expansion of the Toxic Release Inventory to Include Certain Non-Manufacturing Industries.'' This document is available in the docket for this rulemaking.

EPA is proposing this rule under sections 313 and 328 of EPCRA. EPA estimates that private expenditures will exceed the threshold of $100 million in all years and that public expenditures will fall well below the threshold for all years. EPA prepared an economic impact analysis of the proposal, entitled *Economic Analysis of the Proposed Rule to Add Certain Industries to EPCRA Section 313*, in which it considered several regulatory alternatives (Ref. 20). EPA estimates that the costs of the proposed rule will be $190 million in the first year and $118 million in subsequent years. Of this, only $8 million in the first year and $5 million in subsequent years is expected to consist of costs to state, local, or tribal governments. These cost estimates are based on the anticipated reporting from publicly-owned electric utilities that are coal- or oil-fired.

EPA estimates that the proposed regulation is highly unlikely to have any measurable effect on the national economy, nor is it expected to have disproportionate budgetary effects on a particular segment of the private sector. EPA has not identified any sources that are available from either EPA or other Federal Agencies to pay for State, local, or tribal government costs, nor has it identified any EPA or Federal resources specifically intended to carry out the intergovernmental mandate.

Section 203 of UMRA provides that before establishing any regulatory requirements that might significantly or uniquely affect small governments, the agency shall develop a small government agency plan. Because costs to the public sector are estimated to be considerably below $100 million in any year, EPA finds no significant impacts on small governments; nor is the proposed rule expected to uniquely affect them.

Because this proposed rule does not contain a significant Federal intergovernmental mandate, the UMRA section 204 requirements are not triggered. The Agency, however, has sought interaction with state and local officials of the type contemplated by

section 204 of UMRA and Executive Order 12875, ''Enhancing the Intergovernmental Partnership.'' EPA has conducted outreach to organizations representing these entities, and will continue a constructive dialogue to ensure that pertinent issues are addressed.

E. Executive Order 12898

Pursuant to Executive Order 12898 (59 FR 7629, February 11, 1994), entitled *Federal Actions to Address Environmental Justice in Minority Populations and Low-Income Populations*, the Agency has considered environmental justice-related issues with regard to the potential impacts of this proposed action on the environmental and health conditions in low-income populations and minority populations.

In keeping with Executive Order 12898, as part of its analysis in support of this proposed expansion of the TRI program to include new industry groups, EPA has examined the distribution patterns of public information on toxic chemical releases and transfers (which may have substantial environmental impacts on surrounding communities). The Agency believes that the Environmental Justice Analysis described below is an important part of its overall environmental justice strategy, and is in keeping with the spirit of the Executive Order. The Agency interprets its responsibilities under the Order as they would apply to this rulemaking activity to include exploring the distribution of information benefits, in demographic terms, of the expansion.

To assess the implications of the rulemaking on environmental justice, the Agency examined demographic characteristics for populations residing in jurisdictions (counties or zip codes) where facilities in the proposed industries are located. The analysis is included as part of the economic analysis for the proposal (Ref. 20). The analysis found that households with annual incomes less than $15,000 and minority and urban populations are slightly over-represented in communities containing facilities in the proposed industry groups. The TRI expansion would also result in persons in a large number of communities receiving TRI information about facilities in their vicinity for the first time. By adding the proposed industry groups, EPA will be creating informational benefits for certain subpopulations that previously did not receive TRI information on releases and transfers of toxic chemicals in their communities.

Table 1.—Summary of Regulatory Alternatives

Regulatory Alternative	Annual		Industry Costs ($ million per year)	
	Number of Reporting Facilities	Number of Reports	First Year	Subsequent Year
I.A Comprehensive industries, current otherwise use interpretation	49,174	110,217	793	349
I.B Comprehensive industries, revised otherwise use interpretation	52,378	249,063	1,437	794
II.A Limited industries, current otherwise use interpretation	8,354	37,077	176	116
II.B Limited industries, revised otherwise use interpretation	8,385	43,637	206	137
III.A Proposed industries, current otherwise use interpretation	6,397	31,154	149	98
III.B Proposed industries, revised otherwise use interpretation	6,428	37,714	191	119
IV.A Comprehensive industries, current otherwise use interpretation, limited mining reporting	49,127	109,695	791	347
IV.B Comprehensive industries, current otherwise use interpretation, expanded mining reporting	50,602	120,905	846	383
V. Comprehensive industries, current otherwise use interpretation, expanded electric utility reporting	49,174	116,833	821	368

Table 2.—Summary of Reporting for Proposed Industries

Industry	Number of Facilities in Industry	Number of Reporting Facilities	Percent of Facilities in Industry Reporting	Annual Number of Reports	Industry Costs ($ million per year)	
					First Year	Subsequent Years
Metal Mining	1,060	328	31%	1,176	6.5	3.8
Coal Mining	3,312	321	10%	642	5.4	2.5
Electric Utilities	3,213	974	30%	5,567	26.6	16.6
Hazardous Waste Treatment Disposal Facilities	164	164	100%	6,711	31.2	21.5
Chemicals & Allied Products Wholesale	9,014	782	9%	11,139	51.5	33.5
Petroleum Bulk Stations & Terminals Wholesale	10,292	3,842	37%	12,394	69.3	40.7
Solvent Recovery Services	40	17	43%	85	0.4	0.3
Total	28,021	6,428	23%	37,714	191.1	118.8

Table 3.—First Year Burden and Cost

Activity	Average Time (hours)			Average Cost
	Managerial	Technical	Clerical	
Rule Familiarization	12.0	22.5	0.0	$2,243 per facility
Compliance Determination	4.0	12.0	0.0	$1,010 per facility
Form R Calculations and Completion	20.9	45.2	2.9	$4,330 per report
Certification Calculations and Completion.	16.5	27.7	2.2	$2,947 per report
Recordkeeping (Form R)	0.0	4.0	1.0	$257 per report
Recordkeeping (Certification)	0.0	2.4	0.6	$154 per report

Table 4.—Subsequent Year Burden and Costs

Activity	Average Time (hours)			Average Cost
	Managerial	Technical	Clerical	
Compliance Determination	1.0	3.0	0.0	$252 per facility
Form R Calculations and Completion	14.3	30.8	2.0	$2,946 per report
Certification Calculations and Completion	11.2	18.9	1.5	$2,006 per report
Recordkeeping (Form R)	0.0	4.0	1.0	$257 per report
Recordkeeping (Certification)	0.0	2.4	0.6	$154 per report

List of Subjects in 40 CFR Part 372

Environmental protection, Community right-to-know, Reporting and recordkeeping requirements, Toxic Chemicals.

Dated: June 21, 1996.

Carol M. Browner,

Administrator.

Therefore, it is proposed that 40 CFR part 372 be amended to read as follows:

PART 372—[AMENDED]

1. The authority citation for part 372 would continue to read as follows:

Authority: 42 U.S.C. 11013 and 11028.

2. In § 372.3, by alphabetically adding the following definitions to read as follows:

§ 372.3 Definitions.

* * * * *

Extraction means the physical removal or exposure of ore, coal, minerals, waste rock, or overburden prior to beneficiation, and encompasses all extraction-related activities prior to beneficiation. Extraction does not include beneficiation, coal preparation, mineral processing, *in situ* leaching or any further activities.

* * * * *

Treatment for destruction means the destruction of the toxic chemical such that the substance is no longer a toxic chemical subject to reporting under EPCRA section 313.

3. In § 372.22, by revising paragraph (b) to read as follows:

§ 372.22 Covered facilities for toxic chemical release reporting.

* * * * *

(a) * * *

(b) The facility is in Standard Industrial Classification major group codes 10 (except 1081), 12 (except 1241), and 20 through 39 and industry codes 4911 (limited to facilities that combust coal and/or oil), 4931 (limited to facilities that combust coal and/or oil), 4939 (limited to facilities that combust coal and/or oil), 4953 (limited to facilities regulated under the Resource Conservation and Recovery Act, subtitle C, 42 U.S.C. section 6921 *et seq.*), 5169, 5171, and 7389 (limited to facilities primarily engaged in solvents recovery services on a contract fee basis) (as in effect on January 1, 1987) by virtue of the fact that it meets one of the following criteria:

(1) The facility is an establishment with primary SIC major group codes 10 (except 1081), 12 (except 1241), and 20 through 39 and industry codes 4911 (limited to facilities that combust coal and/or oil), 4931 (limited to facilities that combust coal and/or oil), 4939 (limited to facilities that combust coal and/or oil), 4953 (limited to facilities regulated under the Resource Conservation and Recovery Act, subtitle C, 42 U.S.C. section 6921 *et seq.*), 5169, 5171, and 7389 (limited to facilities primarily engaged in solvents recovery services on a contract fee basis).

(2) The facility is a multi-establishment complex where all establishments have major codes 10 (except 1081), 12 (except 1241), and 20 through 39 and industry codes 4911 (limited to facilities that combust coal and/or oil), 4931 (limited to facilities that combust coal and/or oil), 4939 (limited to facilities that combust coal and/or oil), 4953 (limited to facilities regulated under the Resource Conservation and Recovery Act, subtitle C, 42 U.S.C. section 6921 *et seq.*), 5169, 5171, and 7389 (limited to facilities primarily engaged in solvent recovery services on a contract fee basis).

(3) The facility is a multi-establishment complex in which one of the following is true:

(i) The sum of the value of products shipped and/or produced from those establishments that have a primary major code 10 (except 1081), 12 (except 1241), and 20 through 39 and industry codes 4911 (limited to facilities that combust coal and/or oil), 4931 (limited to facilities that combust coal and/or oil), 4939 (limited to facilities that combust coal and/or oil), 4953 (limited to facilities regulated under the Resource Conservation and Recovery Act, subtitle C, 42 U.S.C. section 6921 *et seq.*), 5169, 5171, and 7389 (limited to facilities primarily engaged in solvent recovery services on a contract fee basis) is greater than 50 percent of the total value of all products shipped and/or produced from all establishments at the facility.

(ii) One establishment having primary major codes 10 (except 1081), 12 (except 1241), and 20 through 39 and industry codes 4911 (limited to facilities that combust coal and/or oil), 4931 (limited to facilities that combust coal and/or oil), 4939 (limited to facilities that combust coal and/or oil), 4953 (limited to facilities regulated under the Resource Conservation and Recovery Act, subtitle C, 42 U.S.C. section 6921 *et seq.*), 5169, 5171, and 7389 (limited to facilities primarily engaged in solvent recovery services on a contract fee basis) contributes more in terms of value of products shipped and/or produced than any other establishment within the facility.

* * * * *

4. In § 372.38, by adding paragraph (g) to read as follows:

§ 372.38 Exemptions

* * * * *

(g) *Coal extraction activities.* If a toxic chemical is manufactured, processed, or otherwise used in extraction in SIC code 12, a person is not required to consider the quantity so manufactured, processed, or otherwise used when determining whether an applicable threshold has been met under § 372.25 or 372.27, or determining the amounts to be reported under § 372.30.

[FR Doc. 96–16392 Filed 6–26–96; 8:45 am]

BILLING CODE 6560–50–F

ENVIRONMENTAL PROTECTION AGENCY

[OPPTS–400104A; FRL–5382–3]

Emergency Planning and Community Right-to-Know; Notice of Public Meeting

AGENCY: Environmental Protection Agency (EPA).

ACTION: Notice of public meeting.

SUMMARY: EPA will hold two public meetings to discuss the Agency's proposal and options to add industry groups to the list of industry groups subject to reporting requirements under section 313 of the Emergency Planning and Community Right-to-Know Act of 1986 (EPCRA).

DATES: The first meeting will take place in San Francisco, CA on August 7, 1996, at 9 a.m. and adjourn by 4 p.m. The second meeting will take place in Washington, DC on August 14, 1996, at 9 a.m. and adjourn by 4 p.m..

ADDRESSES: The first meeting will be held at the: Environmental Protection Agency, Auditorium, 75 Hawthorne St., San Francisco, CA 94105. The second meeting will be held at the: Environmental Protection Agency, Auditorium, Education Center, 401 M St., SW., Washington, DC 20460.

FOR FURTHER INFORMATION CONTACT: Tim Crawford at 202-260-1715, e-mail: crawford.tim@epamail.epa.gov, or Brian Symmes at 202-260-9121, e-mail: symmes.brian@epamail.epa.gov, or the Emergency Planning and Community Right-to-Know Information Hotline, Environmental Protection Agency, Mail Stop 5101, 401 M St., SW., Washington, DC 20460, Toll free: 1-800-535-0202, in Virginia and Alaska: 703-412-9877 or Toll free TDD: 1-800-553-7672.

SUPPLEMENTARY INFORMATION: In 1986, Congress enacted the Emergency Planning and Community Right-to-Know Act (EPCRA). Section 313 of EPCRA requires certain businesses to submit reports each year on the amounts of toxic chemicals their facilities release into the environment or otherwise manage. The purpose of this requirement is to inform the public, government officials, and industry about the chemical management practices of specified toxic chemicals.

Current EPCRA section 313 reporting requirements apply to facilities classified in the manufacturing sector (Standard Industrial Classification codes 20 through 39), that have 10 or more full-time employees, and that manufacture, process, or otherwise use one or more listed section 313 chemicals above certain threshold amounts.

EPA has been in the process of evaluating industry groups for potential addition under EPCRA section 313. Elsewhere in this issue of the Federal Register EPA is proposing to add seven industry groups to the list of industries subject to EPCRA section 313 reporting requirements. These public meetings are being scheduled in order to provide a forum for dialogue to be shared by EPA, potentially affected industry groups, and the public regarding the basis of EPA's proposed action, options provided, and potential impacts and benefits.

Oral statements will be scheduled on a first-come first-serve basis by calling the Emergency Planning and Community Right-to-Know Hotline at the numbers listed under FOR FURTHER INFORMATION CONTACT. All statements will be part of the public record and will be considered in the development of any rule amendment.

Dated: June 21, 1996.

Susan B. Hazen,

Acting Director, Office of Pollution Prevention and Toxics.

[FR Doc. 96–16393 Filed 6–26–96; 8:45 am]

BILLING CODE 6560–50–F

federal register

Thursday
June 27, 1996

Part III

Department of Agriculture

Rural Utilities Service

7 CFR Part 1703

Distance Learning and Telemedicine Grant Program; Final Rule and Notice

DEPARTMENT OF AGRICULTURE

Rural Utilities Service

7 CFR Part 1703

RIN 0572–AB22

Distance Learning and Telemedicine Grant Program

AGENCY: Rural Utilities Service, USDA.

ACTION: Final rule.

SUMMARY: The Rural Utilities Service hereby amends its regulations on the distance learning and telemedicine grant program that provides grants for distance learning and telemedicine projects benefiting rural areas. The regulation revises RUS's method in which applications will be reviewed by RUS and scored. This final rule will make it easier for rural community facilities to apply for a grant.

DATES: This regulation is effective on June 27, 1996.

FOR FURTHER INFORMATION CONTACT: Barbara L. Eddy, Deputy Assistant Administrator, Telecommunications Program, Rural Utilities Service, room 4056–S, AG Box 1590, U.S. Department of Agriculture, Washington, DC 20250, telephone number (202) 720–9549.

SUPPLEMENTARY INFORMATION:

Executive Order 12866

This final rule has been determined to be significant and was reviewed by the Office of Management and Budget (OMB) under Executive Order 12866.

Executive Order 12778

This final rule has been reviewed under Executive Order 12778, Civil Justice Reform. This final rule will not: (1) Preempt any State or local laws, regulations, or policies, unless they present an irreconcilable conflict with this rule; (2) Have any retroactive effect; and (3) Require administrative proceedings before parties may file suit challenging the provisions of this rule.

Regulatory Flexibility Act Certification

RUS has determined that this final rule will not have a significant economic impact on a substantial number of small entities, as defined in the Regulatory Flexibility Act (5 U.S.C. 601 *et seq.*).

Information Collection and Recordkeeping Requirements

The reporting and recordkeeping requirements contained in the final rule have been approved by the Office of Management and Budget (OMB) pursuant to the Paperwork Reduction Act of 1995 (44 U.S.C. Chapter 35, as amended) under OMB control number 0572–0096. Send questions or comments regarding this burden or any other aspect of these collections of information, including suggestions for reducing the burden, to: F. Lamont Heppe, Jr., Director, Program Support and Regulatory Analysis, Rural Utilities Service, U.S. Department of Agriculture, AG Box 1522, Washington, DC 20250.

National Environmental Policy Act Certification

The Administrator of RUS has determined that this final rule will not significantly affect the quality of the human environment as defined by the National Environmental Policy Act of 1969 (42 U.S.C. 4321 *et seq.*). Therefore, this action does not require an environmental impact statement or assessment.

Catalog of Federal Domestic Assistance

The program described by this final rule is listed in the Catalog of Federal Domestic Assistance programs under number 10.855, Distance Learning and Medical Link Grants. This catalog is available on a subscription basis from the Superintendent of Documents, the United States Government Printing Office, Washington, DC 20402.

Executive Order 12372

This program is subject to the provisions of Executive Order 12372 that requires intergovernmental consultation with State and local officials.

Unfunded Mandate

This rule contains no Federal mandates (under the regulatory provisions of Title II of the Unfunded Mandate Reform Act of 1995) for State, local, and tribal governments or the private sector. Thus, this rule is not subject to the requirements of sections 202 and 205 of the Unfunded Mandate Reform Act of 1995.

Background

This final regulation is being published in whole rather than just noting where changes were made. Nearly all the changes concern obtaining a grant, rather than in requirements that apply after a grant is awarded.

The major change is the method in which applicants will be reviewed by RUS and scored. Additionally, several sections of the regulation were moved or restructed to make it more understandable.

RUS has incorporated into this final rule changes in the Distance Learning and Telemedicine grant program as a result of the Federal Agriculture Improvement and Reform Act of 1996; however, this regulation does not address the new loan program inasmuch as funding is not available for a Distance Learning and Telemedicine loan program for fiscal year 1996. In addition, the appeal procedures outlined in Section 1703.118 are for the purposes of fiscal year 1996 funding.

On April 16, 1996, RUS published proposed rule 7 CFR 1703, Distance Learning and Telemedicine Grant Program in the Federal Register and requested comment from interested parties regarding the proposed rule by May 16, 1996. The comments received were considered in this final rule. A list of the comenters and comment summaries and responses follows.

1. Alamo Navajo School Board, Inc., Magdalena, NM
2. Joint Comments Submitted by:
   Mississippi Band of Choctaw Indians, Philadelphia, MS
   Rock Point Community School, Rock Point, AZ
   Black Mesa School, Chinle, AZ
   Northwest Portland Indian Health Board, Portland, OR
   Three Affiliated Tribes, New Town, ND
   Skokomish Indian Tribe, Shelton, WA
   United Tribes Technical College, Bismark, ND
3. Deubrook Area Schools District No. 5–6, White, SD
4. Gershowitz Grant & Evaluation Services, Des Moines IA
5. Rural Economic Development Initiative, Tallahassee, FL
6. Florida State Rural Development Council, Tallahassee, FL
7. Republic County Unified School District No. 427, Belleville, KS
8. Winnebago Cooperative Telephone Association, Lake Mills, IA
9. Brookings School District No. 5–1, Brookings, SD
10. Congressman Pat Roberts, Kansas
11. North Central Kansas Educational Service Center, Concordia, KS
12. Lancaster and Associates, Washington, DC
13. Randy Baines, NHPF, Washington, DC
14. Office of the Inspector General, Washington, DC

Comment Summary (§ 1703.101(b)(Policy). One commenter stated that the second sentence of § 1703.101(b), which discusses leveraging, seems a little out of place following after a discussion of rural areas and greatest need. It was suggested that this idea be moved to the scoring criteria discussion § 1703.117, which awards points for non-federal supplemental funds and local involvement in the project.

Response. RUS believes this is an important statement of policy and should remain in the policy section. The

methods and mechanisms for evaluating the leveraging of grant funds are discussed in detail in § 1703.117.

Comment Summary (§ 1703.101(c) Policy.). The rules provide for the use of technology that would incidentally allow other providers of developers to purchase the elemental functions or access to those functions so other users, in addition to educational and medical users, many benefit from any transmission facilities receiving funding under this subpart. The regulations should define who the other users are and the criteria for determining their eligibility for accessing the technology.

Response. The primary focus of this paragraph was to indicate that RUS policy is technology neutral. The statement relating to using technology that would allow others to utilize some of the excess capacity of the transmission facilities reflects the current practices in the telecommunications industry. For example, a fiber optic cable may have the capacity to serve hundreds of users without affecting service to any one individual or group of individuals. This allows each subscriber to share in the costs of the facilities.

Comment Summary (§ 1703.101(d) Policy.). One commenter suggested that paragraph (d) of § 1703.101 be deleted and that the regulation consistently reference the six major criteria in § 1703.117 rather than add other factors throughout the regulation. The commenter believes that including paragraph (d) causes confusion as to what RUS will use to select the application and that applicants may not know the basis for RUS' selection: whether the scoring criteria are the key or other factors mentioned throughout are the key to a successful application. It was therefore suggested that RUS be clear in adhering only to its existing six scoring criteria in § 1703.117 and not have other factors mentioned elsewhere in the regulation. Additionally, since there is an appeal process, clarification may remove any issues for contention.

Response. The requirements in § 1703.101(d) state the what, where, how, and why of the application and must be supplied for the application to be complete. Section 1703.117 lists the scoring criteria used to rank applications. All of the scoring criteria need not be addressed, however, the more points earned, the more likely an applicant will be successful in obtaining a grant.

Comment Summary (§ 1703.101(g) Policy.). The rule states that applicants must consult with the Rural Development State Director, USDA, before submitting the application to the RUS in order to explore any funding sources that may be available at the State or local level. The regulations should explicitly describe what the State Director is suppose to do and how it should be documented.

Response. Instructions for State Directors are internal operating procedures that do not affect the application process and could confuse applicants if included in this rule. The instructions will be prepared in the form of a USDA Staff Instruction to the State Directors.

Comment Summary (§ 1703.103(a)(1) Applicant eligibility.). The Indian Nations and Indian organizations requested that the organization requirement for meeting applicant eligibility in § 1703.101 be modified to include Indian tribes and tribal organizations as defined in 25 U.S.C. 450b (b) and (c).

Response. RUS intended to extend applicant eligibility to Indian organizations. This section has been revised to clarify that Indian Nations and Tribal Organizations are eligible to apply.

Comment Summary (§ 1703.103(a)(1) Applicant eligibility). One commenter stated that the rule, in defining a state government to be an eligible applicant, should be clarified to specify which state government-operated rural facilities are eligible to participate in the program.

Response. Section 1703.103(a)(1) states a state government, other than a state government entity that operates a rural community facility, is not considered an eligible applicant. Rural community facility is defined in § 1703.102. Therefore, any state government that does operate a rural community facility, as defined in § 1703.102, may be eligible.

Comment Summary (§ 1703.104(a) Allowable grant funding percentage, grant purposes, and in-kind matching provisions). One commenter recommended deleting the use of 42.85 percent to discuss the match funding required, stating that this wording may be confusing to applicants.

Response. As stated in the rule, 42.85 percent is 30 percent of the maximum funding percentage provided by RUS, or the minimum amount the applicant must match. RUS believes the use of 42.85 percent is appropriate and that the parenthetical reference in paragraph (a) further clarifies the minimum match funding required.

Comment Summary (§ 1703.104(f) Allowable grant funding percentage, grant purposes, and in-kind matching provisions). One commenter, stating that the rule provides that in kind contributions shall not consist of eligible equipment which has been subject to depreciation, suggested that this wording be changed to clarify that the equipment must be new, as described in paragraph (c).

Response. This paragraph has been revised to clarify that the eligible equipment must not be used and must have market value.

Comment Summary (§ 1703.106 Maximum and minimum sizes of a grant). One commenter stated that the regulation establishes the maximum grant amount as a percentage of the total grant funds instead of a maximum set at a specific dollar limit. To assist the applicant in planning, the regulations should explain how an applicant can obtain the maximum amount for its grant request.

Response. Annual maximum grant amounts will be published in the Federal Register Notice indicating deadlines for application submissions and the amount of grant funds available, as stated in § 1703.113.

Comment Summary (§ 1703.107 The grant application). One commenter believed that in this section, § 1703.107, there appears to be many selection factors mentioned that an applicant should consider rather than simply asking the applicant to address the factors that are listed as the scoring criteria. These appear primarily in the ''Executive summary'' section. Placing additional factors in the form of areas the applicant must address or detail does not clarify the process. Rather than use new factors or a different method of phrasing an idea, RUS should refer to the language used in discussing the scoring criteria. The commenter suggested that the regulation would be both clearer and simpler if § 1703.107(c)(2) (i) through (iv) were removed, and perhaps even paragraph (c)(6), and instead use the ''Executive summary'' for addressing the criteria in § 1703.117. Additionally, for the executive summary, paragraph (c)(3) should only address the economic and demographic description and types of services offered, information not requested elsewhere, because the benefits will be addressed under criterion § 1703.117(d), the ''need for services.'' As proposed, the applicant has to discuss very similar issues described in different phraseology, once in the executive summary and then later under § 1703.107(d). It would seem preferable to require a discussion of these issues in an executive summary by a simple and straightforward reference that he applicant must summarize each criterion in the scoring criteria § 1703.117.

Response. Section 1703.107 describes for the applicant all of the information needed in support of their application. This section sets forth the items which comprise the required material that must be submitted to RUS for a grant request. It does not, as does § 1703.117 (Criteria for scoring applications), describe the methods used by RUS in evaluating grant applications. RUS does not believe these two sections are redundant, nor ambiguous, and therefore has not made the recommended change.

Comment Summary (§ 1703.107(e)(2) Financial information). One commenter suggested this section could be made more specific and more precise by combining two sentences as follows: ''A pro-forma income and expense statement for each participating hub and end user site for the project covered by the application. The pro-forma statements must cover a minimum of 5 years after completion of the project and provide that the income and expense statements reflect sufficient income to pay cash operating expenses including telecommunications access and/or toll charges, system maintenance, salaries, training, and any other general operating expenses; . . .''.

Response. RUS has reworded this paragraph for clarity.

Comment Summary (§ 1703.107(e) (1), (2), (3), and (4) Financial information). Several respondents commented that the proposed rule includes a new requirement that applicant submit (1) a current balance sheet for each member of the consortium; (2) a pro forma income and expense statement for each participating hub and end user site covering a minimum of five years after completion of the project; (3) evidence of sources of revenue for each hub and end-user site; and (4) an explanation of the economic analysis justifying the rate structure. The commenters objected to the change in the financial reporting regulations stating it would be difficult and expensive to fulfill. Commenters understood the legitimacy of RUS' concern that grant recipients be financially stable and that projects be sustainable, but they also did not believe that the proposed financial information requirements are the best way to determine this, especially for educational applicants. The health care field has been in a state of flux as the result of the trend toward managed care. Therefore, requiring detailed financial information from these applicants is prudent. However, local education is far more stable and does not present the same concern. Moreover, the costs of assembling the required information may deter some needy applicants from proceeding with their grant proposals. It was suggested that school districts be allowed to submit an audit statement as in the past (or State approved audit report) or at least provide an exclusion for public school districts so that they are not required to comply with financial accounting procedures which are not otherwise appropriate for those school districts. It was also suggested that educational applicants be permitted to substantiate claims of sustainability in the main narrative using evidence of their own selection.

One commenter also recommended that, if the reporting requirements are not reduced, RUS should extend the application deadline to at least October 15, 1996; this would allow schools a few weeks during a period when they are fully staffed to respond.

Response. RUS agrees that the financial reporting requirements, particularly for educational institutions, may prove burdensome as it was stated in the proposed rule. RUS has therefore made audited financial statements optional instead of compulsory. With regard to delaying awards, RUS has committed to its customers that it will award the FY 1996 grants in FY 1996 and will not delay its FY 1996 obligations.

Comment Summary (§ 1703.107(e)(1) Financial information). One commenter stated that the regulations should require applicants to provide audited or certified financial information to support requests for grant funds to provide added assurance that the information is accurate.

Response. RUS believes that requiring audited or certified financial statements during the application phase would be unnecessarily burdensome on the applicants. RUS is confident that the financial information obtained after grant selections are made is sufficient assurance of financial stability.

Comment summary (§ 1703.107(o) Supplemental information). One commenter believed that paragraph (o) of this section was unclear as to whether the applicant has to prepare the Technical Questionnaire (RUS Form 479–A) and to what extent it was considered in determining the selection. The proposed rule indicates that it is desired, will be used, and implies that it may increase an applicant's chance of selection. It was therefore suggested that the Technical Questionnaire should be made a part of the application requirement.

Response. RUS Form 479–A will only be required from recipients of grant funding. This section has been amended and the requirement to submit RUS Form 479–A has been addressed in § 1703.122, Further processing of selected applications.

Comment Summary (§ 1703.109 Determining what is rural). Two commenters expressed concern with the use of counties as a determining factor for rural. They noted that rural areas that contain high levels of unemployment and extreme levels of people on public assistance are sometimes located in urban counties. These rural areas would benefit greatly from the availability of telemedicine and distance learning technology. Yet, because of a rurality score of the county, which is a two or urban, these areas of need are effectively prevented from competing for these programs. The commenters suggested RUS use the same definition utilized by the USDA's infrastructure and business programs. These programs define rural to include unincorporated areas, open county, and cities and towns with populations up to 10,000 or 50,000 depending on the particular program.

Response. RUS believes that § 1703.109 fairly accomplishes a rural test and meets the intent of providing assistance in predominately rural areas. In addition, paragraph (d) of this section allows an applicant to appeal a ruling made under this section which results in a denial of an application.

Comment Summary (§ 1703.117(d)(1) Financial consideration of a project). Commenters believe that awarding increasing numbers of bonus points for matches up to 300% defeats RUS' intention to direct funding toward the least affluent communities. It was suggested that the rules regarding matching funds remain the same, or consider truncating the bonus points at a dollar for dollar match, rather than a 300% match, or that the bonus point schedule have an upper limit of 100% rather than 300%.

Response. The intent of paragraph (d)(1) is to maximize the benefits of a limited source of grant finding by encouraging applicants to seek additional sources (whether local or not) of funding to leverage their proposed projects. Paragraph (d)(2) further rewards applicants with a limited number of bonus points for local community funding. And in paragraph (c), the financial needs of a community are assessed on a per capita income basis, awarding more points for poorer communities. RUS believes that all communities, including least affluent, are represented fairly when being scored based on financial consideration of a project and that awarding higher points for non-Federal matching up to 300 percent does not disadvantage one community over another.

Comment Summary (§ 1703.117(d)(2) Criteria for scoring applications). One commenter stated that RUS should reconsider extra priority given to local funding sources because the Farm Bill revision mentions the portion of total funds provided by applicants and non-federal sources, with no mention of local financing.

Response. Paragraph (d)(2) awards bonus points applicants for a given level of local community involvement. While the maximum number of bonus points possible is relatively small, RUS believes that local community involvement in the funding process is an important indicator of community strength and may increase the overall benefits of the project to the community's residents.

Comment Summary (§ 1703.117(e) The Comparative Rurality of the Proposed Project Service Area). Several commenters stated that under the previous rule, rurality was calculated according to the number of end user sites and that the proposed rule substitutes the number of end users rather than the number of sites. The commenters believe that this approach defeats the objective of giving greater priority to the most rural areas, and also lends itself to manipulation of data. Enrollments in the most rural communities are likely to be smaller than elsewhere, therefore the proposed method of calculation penalizes them for their low enrollments. In addition, using individuals rather than sites as the basis of calculations may encourage applicants to manipulate data in self-serving ways. The commenters suggested this section be changed or returned to the prior method of calculating.

Response. RUS agrees that there may be room for some manipulation under the calculation for rurality as contained in the proposed rule. This section has been amended by reinstating the rurality calculation as it was described in the original rule and Appendix B has been removed.

Comment Summary (§ 1703.117(f)(2) Criteria for scoring applications). One commenter suggested this section be revised slightly. Paragraph (f)(2)(ii), which discusses the ''desires'' of rural residents is not only different from the language of the law but appears to express the same thought as (f)(2)(i) in different terms. Needs and desires seem to be the same idea within the context of this program. ''Needs'' that are not ''desired'' by the beneficiaries cannot be considered needs. In addition, ''willingness to pay'' discussed in (f)(2)(ii) extends beyond the language and overall ideas expressed in the language of the revised law. Paragraph (iii) should be retained because it is consistent with the language of the revised law. Paragraph (iv) should be deleted because outcomes are really benefits and these are already discussed under (f)(2)(i). Paragraph (f)(2)(v) should be retained since it is obviously a priority factor in the revised law.

Response. RUS does not agree. Paragraph (ii) describes, from the community standpoint, the willingness of its residents to participate and use the proposed services if they were available. In paragraph (i), the applicant is providing justification for specific types of services to be provided, without regard, necessarily, to usership, but rather based on the needs of the community as a whole. With regard to paragraph (iv), RUS believes that obtaining information regarding a projects expected outcomes, or end results, is necessary in order to complete the picture of the project under evaluation.

Comment Summary (§ 1703.117 Criteria for scoring applications). One commenter stated that where only a portion of the scoring criteria is satisfied, the regulations should establish a minimum cutoff score for funding applications.

Response. At this time, RUS does not believe a minimum scoring level is needed or desirable.

Comment Summary (§ 1703.118 Other application selection and appeals provisions). One commenter suggested that applicants be able to appeal denial of their application for any reason rather than just an appeal of the numerical scoring. Further, the regulation should provide for appeals to be made to a party outside of RUS, since RUS would be reviewing its own decision. The commenter suggested that the applicant be allowed to review RUS' comments made in support of the score of the application received or the determination for denial for other reasons. In addition, the commenter suggests that time frames set forth for the appeals process is too short, particularly if funding authorization for FY 1996 does not expire at the end of FY 1996.

Response. All applications, submitted in accordance with the application and eligibility provisions of the rule, will be scored by RUS. Denial of an eligible application will be based on the applications score, hence appeal of the score is appropriate. With regard to appeals made to persons outside of RUS, appeals are made to the Secretary of Agriculture, not RUS agency personnel. And because the RUS has committed to award FY 1996 grants in FY 1996, RUS is unable to lengthen the appeals time frames past the end of the fiscal year and individual responses to applicants which appeal in FY 1996 would not be feasible given the time frame that RUS must work with for approving grants this fiscal year.

Comment Summary (§ 1703.118(b) Other application selection and appeal provisions). One commenter suggested that paragraph (b) be revised and condensed for clarity. In particular, by adapting language found later in § 1703.118(c) and replacing (b) (1) through (3) with the following: ''The Administrator will not approve a grant application if he/she determines that the applicant's proposal does not show financial feasibility in accordance with § 1703.107(e) or cannot meet the program purposes in § 1703.100.''

Response. RUS believes that the length and detail of this section is necessary to adequately inform the public of the rights reserved by the Administrator for application selection and the rights reserved for the applicants to appeal the selection process.

Comment Summary (§ 1703.118(a) Other application selection and appeal provisions). One commenter noted that the regulations permit the Administrator to defer funding an eligible higher scoring application in favor of funding for a lower scoring application. When this occurs, the regulations should describe the procedure for processing these higher scoring applications.

Response. This provision allows the Administrator to approve a lesser scoring application over a higher scoring application of a greater dollar amount when there are insufficient funds to provide full funding for the higher scoring application and the higher scoring applicant does not desire a lesser grant amount, or the project is not feasible with the lesser amount. In this event, the higher scoring applicant would need to wait until additional funding becomes available and resubmit its application for consideration at that time.

Comment Summary (§ 1703.140 Expedited telecommunications loans.). One commenter noted that, in the background section, it is stated that these proposed rules do not address the new DLT loan program for FY 1996 because no funding is available. However, this section appears to contradict that statement by describing procedures for obtaining expedited telecommunications loans.

Response. Expedited telecommunications loans and the DLT loan program are not the same. The reference to expedited loans refers to

loans made by the RUS' telecommunications loan program, not loans to be made under the new DLT loan program. Section 1703.140 covers the process for expedition of RUS telecommunications loans.

Comment Summary (General). One commenter, noting that the requirements for preparation of the application and supporting documentation are extensive and will entail a considerable amount of time, technical expertise, and financial resources, suggested that a preapplication approval or preproposal process may be needed to screen applications with the greatest potential for funding before the entire application process is completed. Because of this significant initial investment, the procedures may favor more affluent areas or neglect areas where the need is the greatest but resources are not available to compile the information required by the regulations.

Response. RUS believes that a ''double'' filing on behalf of interested applicants would be overly burdensome, cost prohibitive for some, and inefficient.

RUS has determined that unless this rule is effective upon publication in the Federal Register, it is unlikely that much if any of the Fiscal Year 1996 authorization for the Distance Learning and Telemedicine Grant Program will be available for use by grantees before the authorization lapses.

List of Subjects in 7 CFR Part 1703

Community development, Grant programs-education, grant programs-health care, Grant programs-housing and community development, Reporting and recordkeeping requirements, Rural areas.

For the reasons set forth in the preamble, chapter XVII of title 7 of the Code of Federal Regulations is amended as follows:

PART 1703—RURAL DEVELOPMENT

1. The authority citation for part 1703 continues to read as follows:

Authority: 7 U.S.C. 901 *et seq.* and 950aaa *et seq.*, Pub. L. 103–354, 108 Stat 3178 (7 U.S.C. 6941 *et seq.*).

2. Subpart D of part 1703 is revised to read as follows:

Subpart D—Distance Learning and Telemedicine Grant Program

Sec.

1703.100 Purpose.
1703.101 Policy.
1703.102 Definitions.
1703.103 Applicant eligibility.
1703.104 Allowable grant funding percentage, grant purposes, and in-kind matching provisions.
1703.105 Ineligible grant purposes.
1703.106 Maximum and minimum sizes of a grant.
1703.107 The grant application.
1703.108 Conflict of interest.
1708.109 Determining what is rural.
1703.110–1703.112 [Reserved]
1703.113 Application filing dates, location, processing, and public notification.
1703.114–1703.116 [Reserved]
1703.117 Criteria for scoring applications.
1703.118 Other application selection and appeal provisions.
1703.119–121 [Reserved]
1703.122 Further processing of selected applications.
1703.123–1703.125 [Reserved]
1703.126 Disbursement of grant funds.
1703.127 Reporting and oversight requirements.
1703.128 Audit requirements.
1703.129–1703.134 [Reserved]
1703.135 Grant administration.
1703.136 Changes in project objectives or scope.
1703.137 Grant termination provisions.
1703.138–139 [Reserved]
1703.140 Expedited telecommunications loans.
Apprendix A to Subpart D of Part 1703—ERS Rural—Urban Continuum Scale.
Appendix B to Subpart D of Part 1703—Environmental Questionnaire.

Subpart D—Distance Learning and Telemedicine Grant Program

§ 1703.100 Purpose.

The grants provided under this subpart D are to encourage, improve, and make affordable the use of advanced telecommunications, computer networks, and related advanced technologies to provide educational and medical benefits through distance learning and telemedicine projects to people living in rural areas and to improve rural opportunities.

§ 1703.101 Policy.

(a) RUS recognizes that the transmission of communications and information is a vital component of the infrastructure of rural areas and is necessary to promote rural development. Enhancing communication and information transmission by making affordable advanced telecommunications, computer networks, and related advanced technologies more widely available in rural areas will improve rural opportunities, promote rural economic growth, and enhance the quality of life of rural residents. To further this objective, RUS will award grants under this subpart to distance learning and telemedicine projects that will improve the access of people residing in rural areas to improved educational, training, and medical services, and to opportunities that rely on advanced communication and information technologies to provide such services.

(b) In providing assistance under this subpart, RUS will give priority to rural areas that it believes have the greatest need of enhanced communications. RUS believes that generally the need is greatest: in the most sparsely populated rural areas; and in rural areas that are experiencing economic hardship. RUS will take into consideration the community's involvement in the project and the applicant's ability to leverage grant funds based on its access to capital.

(c) RUS believes that the residents of rural areas and their local institutions which service them can best determine what are the most appropriate communications or information systems for use in their respective communities. Therefore, in administering this subpart, RUS will not favor or mandate the use of one particular technology over another. RUS does believe that it is generally desirable to use technology that would incidentally allow other providers or developers to purchase the elemental functions or access so other users, in addition to educational and medical users, may benefit from any transmission facilities receiving funding under this subpart. In addition, RUS believes it is generally desirable for the project to use products and technologies that are considered open systems. Further, RUS believes that it is desirable to use products and technologies that employ or adhere to nationally recognized standards that will permit equipment from various companies to be connected to the system, and permit the system to be connected to other systems or networks.

(d) Applicants, if they are to be successful in obtaining grant funds must:

(1) Explain the problem that the applicant is intending to solve using grant funds;

(2) Explain how the applicant will use the grant as well as other funds to solve the problem and why this is the best solution;

(3) Explain why RUS grant funds are needed for the project to be successful;

(4) Explain how the grant will be leveraged using funds from the applicant, and local and non-Federal sources;

(5) Show that rural areas are the primary beneficiaries; and,

(6) Show that the project will be sustainable without additional grant funds.

(e) RUS electric and telecommunications borrowers are encouraged to cooperate with each other and with applicants and end users in promoting the program being implemented under this subpart.

(f) RUS staff will make diligent efforts to inform potential applicants in rural areas of the program being implemented under this subpart.

(g) The applicant must check with the Rural Development State Director, U.S. Department of Agriculture, before submitting the application to RUS in order to explore any funding sources that may be available at the state or local level. Evidence of this consultation is a requirement of the grant application.

§ 1703.102 Definitions.

Act means Title XXIII, subtitle D, chapter 1, of the Rural Economic Development Act of 1990 (7 U.S.C. 950aaa through 950aaa–4).

Administrator means the Administrator of the Rural Utilities Service or his or her designee.

Applicant means an eligible organization which applies for a grant under this subpart.

Approved purpose means a purpose that RUS has specifically approved in the letter of agreement and scope of work covering the use of RUS grant funds provided to the grantee.

Borrower means any organization which has an outstanding loan made by RUS or RTB, or guaranteed by RUS, or which is seeking such financing.

Communication satellite ground station complex means transmitters, receivers, and communications antennas at the earth station site together with the interconnecting terrestrial transmission facilities (cables, line, or microwave facilities) and modulating and demodulating equipment necessary for processing traffic received from the terrestrial distribution system prior to transmission via satellite and the traffic received from the satellite prior to transfer to terrestrial distribution systems.

Comprehensive rural telecommunications plan means the plan submitted by an applicant in accordance with § 1703.107(a).

Computer networks means computer hardware and software, terminals, signal conversion equipment including both modulators and demodulators, or related devices, used to communicate with other computers to process and exchange data through a telecommunication network in which signals are generated, modified, or prepared for transmission, or received, via telecommunications terminal equipment and telecommunications transmission facilities.

Consortium means a combination or group of eligible entities formed to undertake the purpose of which the distance learning and telemedicine grant is provided. Each consortium shall be composed of the following:

(1) A tertiary care facility, rural referral center, medical teaching institution, or educational institution accredited by the State;

(2) Any number of institutions that provide health care services or educational services; and,

(3) Not less than three rural hospitals, clinics, community health centers, migrant health centers, local health departments, or similar facilities, or not less than three educational institutions accredited by the State.

Construct means to construct, acquire, install, improve, or extend a facility or system.

Data terminal equipment means equipment that converts user information into data signals for transmission, or reconverts the received data signals into user information, and is normally found on the terminal of a circuit and on the premises of the end user.

Distance learning means a telecommunications link to an end user through the use of eligible equipment to:

(1) Provide educational programs, instruction, or information originating in nonrural areas to students and teachers who are located in rural areas; or

(2) Connect teachers and/or students, located in one rural area with teachers and/or students that are located in a different rural area.

Eligible equipment means a communication satellite ground station complex, computer networks, data terminal equipment, fiber-optic cable, interactive video equipment, microwave transmission equipment, telecommunications transmission facilities, and telecommunications terminal equipment.

Eligible organization means an incorporated entity that meets the requirements of § 1703.103.

End user means either or both of the following:

(1) Rural elementary or secondary schools or other educational institutions, such as institutions of higher education, county extension services, vocational and adult training and education centers, and teacher training centers, and students, teachers and instructors using such rural educational facilities, that participate in a rural distance learning telecommunications program through a project funded under this subpart;

(2) Rural hospitals, primary care centers or facilities, such as medical centers and clinics, and physicians and staff using such rural medical facilities, that participate in a telemedicine telecommunications program through a project funded under this subpart.

End user site means a facility located in a rural area that is part of a network or telecommunications system that is utilized by end users.

ERS means the Economic Research Service, an agency of the United States Department of Agriculture.

Grantee means a recipient of a grant from RUS to carry out the purposes of this subpart.

Hub means originating source of a network or telecommunications system.

Instructional programming means educational programming, including computer software, which would be used for tutorial purposes in connection with eligible equipment.

Interactive video equipment means equipment used to produce and prepare for transmission audio and visual signals from at least two distant locations such that individuals at such locations can verbally and visually communicate with each other. Such equipment includes monitors, other display devices, cameras or other recording devices, audio pickup devices, and other related equipment.

Letter of agreement means a legal document executed by RUS and the grantee that contains specific terms, conditions, requirements, and understandings applicable to a particular grant.

Local exchange carrier means a commercial, cooperative or mutual-type association, or public body that provides telecommunications service, through a local central switching office, to the subscribers within its designated service area, and between the local subscribers and the toll network.

Project means an undertaking to provide or improve distance learning or telemedicine by using financial assistance from RUS under this subpart.

Project service area means the area in which at least 90 percent of the persons to be served by the project are likely to reside.

RE Act means the Rural Electrification Act of 1936, as amended (7 U.S.C. 901 *et seq.*).

REA means the Rural Electrification Administration, formerly an agency of the United States Department of Agriculture, and predecessor agency to RUS with respect to administering certain electric and telecommunications loan programs.

Rural means any area of the country that meets the determining criteria in § 1703.109.

Rural community facilities means facilities such as schools, libraries, hospitals, medical centers, or similar facilities, located in rural areas, or primarily used by residents of rural areas, that will use a telecommunications, computer network, or related advanced technology system to provide educational and/or medical benefits primarily to residents of rural areas.

RUS means the Rural Utilities Service, an agency of the United States Department of Agriculture established pursuant to Section 232 of the Federal Crop Insurance Reform and Department of Agriculture Reorganization Act of 1994 (Public Law 103–354, 108 Stat. 3178), successor to REA with respect to administering certain electric and telecommunications programs. See 7 CFR 1700.1.

Scope of work means a detailed plan of work that has been approved by the Administrator and that will be performed by the applicant using funds provided under the grant.

Secretary means the Secretary of Agriculture.

Technical assistance means

(1) Assistance in learning to operate equipment or systems; and

(2) Studies, analyses, designs, reports, manuals, guides, literature, or other forms of creating, acquiring, and/or disseminating information.

Telecommunications terminal equipment means the assembly of telecommunications equipment at the end of a circuit or path of a signal, including but not limited to over the air broadcast, satellite, and microwave, normally located on the premises of the end user, that interfaces with telecommunications transmission facilities, and that is used to modify, convert, encode, or otherwise prepare signals to be transmitted via such telecommunications facilities, or that is used to modify, reconvert, or carry signals received from such facilities, the purpose of which is to accomplish the goal for which the circuit or signal was established.

Telecommunications transmission facilities means facilities that transmit, receive, or carry data between the telecommunications terminal equipment at each end of the telecommunications circuit or path. Such facilities include microwave antennae, relay stations and towers, other telecommunications antennae, fiber-optic cables and repeaters, coaxial cables, communication satellite ground station complexes, copper cable electronic equipment associated with telecommunications transmissions, and similar items.

Telemedicine means a telecommunications link to an end user through the use of eligible equipment which electronically links medical professionals at separate sites in order to exchange medical information in audio, video, graphic, or other format for the purpose of providing improved health care services primarily to residents of rural areas.

§ 1703.103 Applicant eligibility.

(a) To be eligible to receive a grant under this subpart, the applicant must be organized in one of the following corporate structures:

(1) An incorporated organization, partnership, Indian tribes and tribal organizations as defined in 25 U.S.C. 450b (b) and (c), or other legal entity which operates, or will operate, a school, college, vocational training facility, or other educational institution, including a regional educational laboratory, library, hospital, medical center, medical clinic or other rural community facility. A state government, other than a state government entity that operates a rural community facility, is not considered an eligible applicant. The applicant may be a private or municipal corporation organized on a for-profit or not-for-profit basis, or

(2) A consortium, as defined in § 1703.102. A consortium which includes a state government entity is only eligible if the state government entity operates a rural community facility.

(3) An incorporated organization, partnership, or other legal entity which is providing or proposes to provide telemedicine service or distance learning service to other legal entities or consortia at rates calculated to ensure that the economic value and other benefits of the distance learning or telemedicine grant is passed through to such other legal entities or consortia.

(b) At least one of the entities of a partnership or consortium must be eligible individually, and the partnership or consortium must provide written evidence of its legal capacity to contract with RUS. If a partnership or consortium lacks the capacity to contract, each individual entity must contract with RUS on its own behalf.

§ 1703.104 Allowable grant funding percentage, grant purposes, and in-kind matching provisions.

(a) Grants may be used by eligible organizations for distance learning and telemedicine projects to finance up to 70 percent of the cost of allowable grant purposes outlined in paragraph (b) of this section. The applicant will, therefore, provide matching funding in an amount no less than 42.85 percent of the RUS grant. (If the grant covers 70 percent of total project costs, the applicant provides the other 30 percent of the project costs. Thirty percent of the project costs is 42.85 percent of the 70 percent, i.e., the minimum amount of the match.)

(b) Grants for purposes outlined in paragraphs (b)(2) through (b)(6) of this section shall be limited to costs associated with initial capital expenses for establishing the project. The following are allowable grant purposes:

(1) Acquiring, by lease or purchase, eligible equipment as defined in § 1703.102;

(2) Acquiring, by lease or purchase, software to operate eligible equipment, including any related software;

(3) Acquiring or developing instructional programming;

(4) Providing technical assistance and instruction for using eligible equipment, including any related software;

(5) Engineering or environmental studies relating to the establishment or expansion of the phase of the project that is being financed with the RUS grant; and

(6) Facilities, equipment, or activities and non-recurring service charges that are described in a comprehensive rural telecommunications plan which has been approved by the Administrator.

(c) In kind matching—the applicant's minimum 30 percent funding contribution for allowable grant purposes, i.e., 42.85 percent matching of the RUS grant, generally is required in the form of cash. However, certain in-kind contributions may be substituted for cash as follows:

(1) Equipment, activities and facilities as set forth in § 1703.104(b);

(2) Improvements made to real property necessary to accommodate eligible equipment;

(3) Facilities constructed to accommodate eligible equipment, such as buildings in which terminal equipment and/or transmission facilities would be located;

(4) Real property purchased or acquired for the sole purpose of accommodating distance learning and telemedicine facilities; or

(5) The present value of long term leases of eligible equipment, with duration according to recognized industry standards and compatible with the type of equipment leased.

(d) In kind items furnished in paragraph (c)(1) of this section must be non-depreciated or new assets with established monetary value by industry

standards. The value of improvements of construction paragraphs (c)(2) and (c)(3) of this section must be established by a qualified independent real property appraiser based on the actual cost of those improvements. The value of land in paragraph (c)(4) of this section must be established by a qualified independent real property appraiser based on a market value appraisal.

(e) In kind contributions can be an integral component of an approved comprehensive rural telecommunications plan as set forth in § 1703.107(a).

(f) In kind contributions shall not consist of eligible equipment which has been subject to depreciation (used equipment), or for equipment, services and labor not eligible for grant funding as set forth in § 1703.105.

(g) Funding may be provided for end user sites. Funding may also be provided for hubs located in rural an non-rural areas, if they are necessary to provide distance learning and/or telemedicine services to rural residents at end user sites. However, funding will not be provided for sites proposed as hubs if it is not demonstrated that they are an integral part of the proposed network and are necessary to transmit distance learning and/or telemedicine services to end users.

§ 1703.105 Ineligible grant purposes.

(a) Grants must not be used;

(1) To fund more than 70 percent of the eligible costs of a project under this subpart;

(2) To cover the costs of installing or constructing telecommunications transmission facilities, except as provided in paragraph (c) of this section;

(3) To pay for medical equipment except medical equipment primarily used for encoding and decoding data, such as images, for transmission over a telecommunications or computer network;

(4) To pay salaries, wages, or employee benefits to medical or educational personnel;

(5) To pay for the salaries or administrative expenses of the applicant;

(6) To purchase equipment that will be owned by the local exchange carrier or another telecommunications service provider;

(7) To duplicate services in place on the date the completed application is received by RUS, or to reimburse the applicant or others for costs incurred prior to RUS's receipt of the completed application;

(8) To pay costs of preparing the application package for funding under this program;

(9) To refinance indebtedness incurred prior to receipt of the completed application by RUS;

(10) For projects whose sole objective is to provide links between teachers and students or medical professionals who are located at the same facility;

(11) For site development, the destruction of alteration of building, or other activities that might adversely affect the environment or limit the choice of reasonable alternatives unless and until the requirements of § 1703.107(j) have been satisfied;

(12) For projects located in areas covered by the Coastal Barrier Resources Act (16 U.S.C. 3501 *et seq.*); or

(13) For any purpose that the Administrator has not specifically approved.

(b) Except as otherwise provided in § 1703.140, funds shall not be used to finance a project in part when success of the project is dependent upon the receipt of additional funding under this subpart D or is dependent upon the receipt of other funding that is not assured.

(c) Grants must not be used to cover the costs of telecommunications transmission facilities if the local exchange carrier for the project area will install such facilities through the use of the expedited telecommunications loans made under the RE Act or through other financing procedures within a reasonable time period and at a cost that does not destroy the feasibility of the project, as determined by the Administrator.

(d) Except for leases provided in § 1703.104(b) (1) and (2), grants must not be used to pay the cost of recurring or operating expenses for the project.

§ 1703.106 Maximum and minimum sizes of a grant.

Applications for grants to be considered under this subpart will be subject to limitations on the proposed amount of funding. The maximum grant amount that will be awarded for any one project in any given fiscal year will not exceed 10 percent of the appropriated funds available for all grants during the fiscal year in which the application for such project is selected. The Administrator may publish notice of the annual maximum grant amount in the Federal Register. An applicant submitting an application which exceeds the maximum will be notified to that effect by RUS and given the opportunity to revise the application. The minimum size of a grant is $50,000.

§ 1703.107 The grant application.

The following items comprise the required material that must be submitted to RUS in support of the grant request:

(a) Comprehensive Rural Telecommunications Plan. A Comprehensive Rural Telecommunications Plan, consisting of the following is required *only* when the applicant is requesting grant funds for telecommunications transmission facilities:

(1) A detailed explanation of the proposed rural telecommunications system, how such system is to be funded, and a description of the intended uses for a grant received under this subpart.

(2) The capabilities of the telecommunications transmission facilities, including bandwidth, networking topology, switching, multiplexing, standards and protocols for intra-networking and open systems architecture (the ability to effectively communicate with other networks). In addition, the applicant must explain the manner in which the transmission facilities will deliver the proposed services. For example, for medical diagnostics, the applicant might indicate whether or not a guest or other diagnosticians can join the network from locations off the network. For educational services, indicate whether or not all hub and end-user sites are able to simultaneously hear in real-time and see each other or the instructional material in real-time. The applicant must include detailed cost estimates for operating and maintaining the network, and include evidence that alternative delivery methods and systems were evaluated.

Note: if a local exchange carrier is providing the transmission facilities, the requirements of this paragraph may be omitted form the Comprehensive Rural Telecommunications Plan.

(3) The capabilities of the telecommunications terminal equipment, including a description of the specific equipment which will be used to deliver the proposed service. The applicant must document discussions with various technical sources which could include consultants, engineers, product vendors, or internal technical experts, provide detailed cost estimates for operating and maintaining the end user equipment and provide evidence that alternative equipment and technologies were evaluated.

(4) A listing of the proposed purchases or leases of telecommunications terminal

equipment, telecommunications transmission facilities, data terminal equipment, interactive video equipment, computer hardware and software systems, and components that process data for transmission via telecommunications, computer network components, communication satellite ground station equipment, or any other elements of the telecommunications system designed to further the purposes of this subpart, that the applicant intends to build or fund using the grant funds.

(5) An explanation of the special financial or other needs of the affected rural communities and of the applicant for such grant assistance.

(6) An analysis of the relative costs and benefits of proposals for leasing or purchasing of facilities, equipment, components, hardware and software, or other items.

(7) A description of the consultations with the appropriate local exchange carrier or carriers and with a wide variety of additional telecommunications service providers (including other interexchange carriers, cable television operators, enhanced service providers, providers of satellite services and telecommunications equipment manufacturers and distributors) and the anticipated role of such providers in the proposed telecommunications system.

(b) Proposed scope of work of the project. The proposed scope of work of the project which includes, at a minimum:

(1) The specific activities to be performed under the project;

(2) Who will carry out the activities;

(3) The time-frames for accomplishing the project objectives and activities;

(4) A budget for capital expenditures reflecting the line item costs for both the grant funds and other sources of funds for the project;

(5) Information indicating the ability of the applicant to reduce the size or scope of the project in the event RUS funding, or other projected sources of funding, were reduced or delayed. The applicant must indicate the respective components of the project that would receive the highest priority of funding; and

(6) Information about the potential of the proposed network to expand its size or scope if additional funding was available.

(c) Executive summary for the project. The applicant must provide RUS a general project overview, verification of compliance with the general requirements of this subpart, and documentation of eligibility. The executive summary should not exceed eight one-sided double spaced pages, size 8.5″ x 11″, with a minimum font size of 12 points. The executive summary shall contain the following 10 categories:

(1) A description of the applicant, documenting eligibility with § 1703.103.

(2) An explanation of:

(i) The problem the applicant is intending to solve;

(ii) How the applicant will use the grant funds to solve the problem;

(iii) The amount of RUS grant funds required and why such grant funds are needed; and

(iv) How the RUS grant funds will be leveraged, including both amount and source of these additional funds.

(3) A brief economic and demographic description of the proposed service area, the types of educational and/or medical services to be offered by the project, and the benefits to the rural residents.

(4) A physical description of the project service area. The applicant should include information regarding topography and available transportation and telecommunications infrastructure.

(5) A description of the project as distance learning or telemedicine facility as defined in § 1703.102. If the project provides both distance learning and telemedicine services, the applicant must identify the predominant use of the system.

(6) A list of expected outcomes, benefits or services to be provided by the project. Some examples include, but are not limited to:

(i) Improved education opportunities for a specified number of students;

(ii) Travel time and money saved by telemedicine diagnosis;

(iii) Number of doctors retained in rural areas;

(iv) Number of additional students electing to attend higher education institutions,

(v) Lives saved due to prompt medical diagnosis and treatment;

(vi) New education courses offered, including college level courses; and

(vii) Expanded use of educational facilities such as night training.

(7) A general overview of the telecommunications system to be developed, including the types of equipment, technologies, and facilities used.

(8) A description of the participating hubs and end user sites and the number of rural residents which will be served by the proposed project at each end user site.

(9) A brief narrative describing the project service area to allow a determination of rural eligibility in accordance with § 1703.109. The applicant must list all counties located in the proposed service area, and the Economic Research Service's Rural—Urban Continuum Category for each county. These categories may be obtained from RUS, any USDA Rural Development state office or from State Land Grant University Cooperative Extension Offices.

(10) The applicant must indicate whether or not it is willing to have its grant application forwarded to other agencies within USDA for consideration in the event the application is not selected for funding under this subpart.

(d) A section on compliance with scoring criteria. The applicant must provide a justification for the number of points the proposed project will obtain for each of the criteria for scoring applications set forth in § 1703.117.

(e) Financial information. The applicant must provide financial information to support the need for the grant funds for the project, show its financial capacity to carry out the proposed work, and show project feasibility. The financial information must include the following:

(1) A current balance sheet from the applicant reflecting its financial condition. When the applicant is a partnership, company, corporation or other entity, current balance sheets are needed from each of the entities that has at least a 20 percent interest in such partnership, company, corporation or other entity. When the applicant is a consortium, a current balance sheet is needed from each member of the consortium and from each of the entities that has at least a 20 percent interest in such member of the consortium. While not required, an audit report is preferable and must be for a period which ended no earlier than 12 months preceding the date of the application; and

(2) A pro-forma income and expense statement for each participating hub and end user site for the project covered by the application. The pro-forma statements must cover a minimum of 5 years after completion of the project and reflect that the project is feasible and sustainable in order to be considered for grant funds by showing sufficient income to pay cash operating expenses including telecommunications access and/or toll charges, system maintenance, salaries, training, and any other general operating expenses; and provide for replacement of depreciable items. Depreciation shall be based on Internal Revenue Service depreciation rules, or other recognized telecommunications industry guidelines. The applicant shall provide sufficient documentation to substantiate any depreciation projections.

(3) For each hub and end user site, the applicant must identify and provide reasonable evidence of each source of revenue. If the projection relies on cost sharing arrangements among hub and end user sites, the applicant must provide evidence of agreements made among project participants.

(4) For applicants eligible under § 1703.103(a)(3), and explanation of the economic analysis justifying the rate structure to ensure that the benefit of the financial assistance is passed through to the other persons receiving telemedicine or distance learning services.

(5) Exception. An exception is granted for K to 12 school in meeting the requirements of paragraphs (e)(1) through (e)(4) of this section. In lieu of submitting the financial data required in paragraphs (e)(1) through (e)(4) of this section, RUS will accept the current financial statements in a form currently acceptable to the applicant school system's county or State authority.

(f) A statement of experience. The applicant must provide a written narrative (not exceeding three single spaced pages) describing its demonstrated capability and experience, if any, in operating an education or health care endeavor and any project similar to the proposed project. Experience in a similar project is desirable but not required.

(g) Funding commitment from other sources. The applicant must provide evidence of the commitment of funds for the project in addition to the funds requested under this subpart. Evidence should be from an authorized representative of the source organization that the funds are available and will be used for the purposed project.

(h) Proposed evaluation methodology. The applicant must provide a proposed method of evaluating the success of the project in meeting the objectives of the program as set forth in §§ 1703.100 and 1703.101 and the proposed scope of work.

(i) Compliance with other Federal statutes and regulations. The applicant is required to submit evidence that it is in compliance with other Federal statutes and regulations, as detailed in § 1703.33 as follows:

(1) Equal opportunity and nondiscrimination requirements;

(2) Architectural barriers;

(3) Flood hazard area precautions;

(4) Uniform Relocation Assistance and Real Property Acquisition for Federal and Federally Assisted Programs;

(5) Drug-free workplace;

(6) ''Certification Regarding Debarment, Suspension and Other Responsibility Matters—Primary Covered Transaction (See 7 CFR 3017.510);

(7) Intergovernmental review of Federal programs; and

(8) Restrictions on lobbying. For an application for a grant in excess of $100,000, a certification statement, ''Certification Regarding Lobbying:'' is required. If the applicant is engaged in lobbying activities, the applicant must submit a completed disclosure form, ''Disclosure of Lobbying Activities'' (see 7 CFR part 3018).

(j) Environmental impact and historic preservation. The applicant must provide details of the project's impact on the environment and historic preservation. Grants made under this part are subject to part 1794 of this chapter which contains the policies and procedures of RUS for implementing a variety of Federal statutes, regulations and executive orders generally pertaining to protection of the quality of the human environment that are listed in § 1794.1 of this chapter. The application shall contain a separate section entitled ''Environmental Impact of the Project.''

(1) Environmental information. An ''Environmental Questionnaire,'' appendix B to this subpart, may be used by applicants to assist in complying with the requirements of this section. Copies of the Environmental Questionnaire are available for RUS.

(2) Grants for technical assistance projects. For a proposal to fund a technical assistance project, the only environmental information normally required is whether or not the proposed project being studied or analyzed will be located within an area protected under the Coastal Barrier Resources Act (16 U.S.C. 3501 *et seq.*). Generally, the use of Federal funds to promote development on coastal barriers is strictly limited by the Coastal Barrier Resources Act.

(3) Grants for all other projects. Applications for a grant to fund a project that is not subject to paragraph (j)(2) of this section must be accompanied by the information described in this paragraph. The Administrator will review supporting materials in the application and initiate an environmental review process pursuant to part 1794 of this chapter. This process will focus on any environmental concerns or problems that are associated with the project. The level and scope of the environmental review will be determined in accordance with the National Environmental Policy Act of 1969 (NEPA), as amended, (42 U.S.C. 4321 *et seq.*), the Council on Environmental Policy for Implementing the Procedural Provisions of NEPA (40 CFR parts 1500 through 1508), RUS's Environmental Policies and Procedures (part 1794 of this chapter) and other relevant Federal environmental laws, regulations and Executive orders. Activity related to the project that may adversely affect the environment or limit the choice of reasonable alternatives shall not be undertaken prior to completion of RUS's environmental review process.

(4) For a proposed project that only involves internal modifications or equipment additions to buildings or other structures (for example, relocating interior walls or adding computer facilities) and/or external changes or additions to existing buildings, structures or facilities requiring physical disturbance of less than 0.4 hectare (0.99 acre) the environmental information normally required is: a description of the internal modifications or equipment additions, and the external changes or additions to existing buildings, structures or facilities being proposed, the size of the site in hectares, and the general nature of the proposed use of the facilities once the project is completed, including any hazardous materials to be used, created or discharged, any substantial amount of air emissions, wastewater discharge, or solid waste that will be generated.

(k) A completed Standard Form 424 ''Application for Federal Assistance,'' along with a board of directors resolution authorizing the grant request.

(l) Evidence of the applicant's legal existence and authority to enter into a grant agreement with RUS and perform activities proposed under the grant application.

(m) Evidence that the applicant is not delinquent on any obligation owed to the Federal government (7 CFR parts 3015 and 3016).

(n) Evidence that the applicant has consulted with the USDA State Director, Rural Development, concerning the availability of other sources of funding available at the state or local level.

(o) Supplemental information. The applicant should provide any additional information it considers relevant to the project and likely to be helpful in determining the extent to which the proposed project would further the purposes of this subpart.

(p) Additional information requested by RUS. The applicant must provide any additional information the Administrator may consider relevant to the application and necessary to adequately evaluate the application and make grant decisions. The Administrator may also request modifications or changes, including

changes in the amount of funds requested, in any proposal described in a grant application submitted under this part.

§ 1703.108 Conflict of interest.

At any time prior to the disbursement of a grant awarded under this subpart, the Administrator may disqualify an otherwise eligible project whenever, in the judgment of the Administrator, the project would create a conflict of interest or the appearance of a conflict of interest. The Administrator will notify the applicant in writing of his/her intention to disqualify the project under this section and set forth the basis for his/her determination that a conflict of interest or appearance exists. Thereafter, the applicant will have 30 days from the date of such notice to file a written response with the Administrator. If the Administrator receives the applicant's response within the 30-day period, the Administrator will consider the information contained therein before making a final determination whether to disqualify the project. The Administrator will promptly notify the applicant of the final determination whether a conflict of interest or appearance of a conflict exists. If the determination is affirmative, the notice will also advise the applicant whether the project is disqualified or conditionally disqualified. If the project is conditionally disqualified, the notice will state under what circumstances the project may continue to be eligible for assistance under this subpart. The Administrator's decision under this section will be final.

§ 1703.109 Determining what is rural.

The RUS Administrator shall determine whether a project service area possesses sufficient characteristics to be considered a rural area for purposes of this subpart. The Administrator shall make such determination on the following basis:

(a) The project service area is located within nonmetropolitan counties included in one of the lowest four categories (6–9) of the ERS Rural—Urban Continuum Scale (rural—urban continuum) as set forth in appendix A to this subpart. Those categories are as follows:

(1) Aggregate urban population (sum of cities, towns, villages or other incorporated communities of 2,500 or more) of less than 20,000, adjacent to a metropolitan area (category 6);

(2) Urban population of less than 20,000, not adjacent to a metropolitan area (category 7);

(3) Completely rural (no cities, towns, villages or other incorporated areas of 2,500 or greater) adjacent to a metropolitan area (category 8);

(4) Completely rural, not adjacent to a metropolitan area (category 9).

(b) In the case of project service areas not categorized as rural areas under paragraph (a) of this section, consideration will be given to the degree of rurality the area possesses taking into account such factors as:

(1) Whether the project service area is located within the boundaries of an incorporated community of 2,500 persons or more as determined by the U.S. Census Bureau;

(2) Where the county or counties in which the project service area is located rank on the rural—urban continuum;

(3) Whether natural geographic barriers or an absence of roads may impede access from the project service area to metropolitan areas;

(4) Whether the county is a spatially large county and the project service area is not within the commuting area of an urbanized area; and

(5) Whether the economy of the project service area centers on natural resource-based activities such as farming, ranching, mining, or timber production, or is highly specialized.

(c) In the case of a project that will serve end users located in more than one county, at least one of which is not categorized as rural under paragraph (a) of this section, RUS will determine the rurality of the project service area case-by-case using factors such as those identified in paragraph (b) of this section. To the extent practicable, in the case of a project that is expected to benefit residents of urban areas as well as residents of rural areas, instead of rejecting an application because it benefits areas they are not rural, RUS may allocate the grant accordingly to assure that grant funds primarily benefit only residents of rural areas.

(d) If a determination made under this section results in the denial of an application, the applicant may appeal such determination to the Administrator in writing setting forth the reasons why it disagrees. Thereafter, the Administrator will review the determination and decide in writing whether to sustain, reverse or modify the original determination. The Administrator's determination will be final. A copy of the Administrator's decision will be furnished promptly to the applicant.

§§ 1703.110–1703.112 [Reserved]

§ 1703.113 Application filing dates, location, processing, and public notification.

(a) Applications for funding under this subpart shall be submitted to the Administrator, Rural Utilities Service, U.S. Department of Agriculture, 14th and Independence Avenue, SW., Washington, DC 20250–1500. Applications should be marked ''Attention: Assistant Administrator, Telecommunications Program''.

(b) Applications will be reviewed for eligibility and considered for funding on a quarterly or annual basis. The Administrator will publish a notice in the Federal Register indicating the deadline(s) for application submissions and the amount of available grant funds.

(c) RUS will review each application for completeness in accordance with § 1703.107, and notify the applicant, within 15 working days of the receipt of the application, of the results of this review, citing any information which is incomplete. To be considered, the applicant must submit the remaining information postmarked no later than the application filing deadline set forth in paragraph (b) of this section, or 15 working days from the receipt of RUS's letter, whichever is the later date. If the applicant fails to submit such information to complete the application in accordance with § 1703.107, the application shall be denied and returned to the applicant.

(d) After receipt of all completed applications, the Administrator will publish notice in the Federal Register of all completed applications received for funding under this subpart. The Administrator will also make those applications available for public inspection at the U.S. Department of Agriculture, 14th and Independence Avenue, SW., Washington, DC. For purposes of this paragraph, applications include any information not protected by the Privacy Act of 1974, 5 U.S.C. 552a, and any other information that has not been designated as proprietary information by the applicant.

(e) For instances where multiple applicants are necessary to carry out a project due to project feasibility or applicant authorities, multiple applications may be submitted jointly by the applicants. The applicants must clearly mark or otherwise identify any information in the application it deems proprietary.

(f) The applicant must submit an original and three copies of a completed application. The applicant must also submit a copy of the application to the State government point of contact at the same time it submits an application to RUS. All applications must include the information described in § 1703.107.

§§ 1703.114–1703.116 [Reserved]

§ 1703.117 Criteria for scoring applications.

(a) *Criteria.* The criteria in this section will be used by the Administrator to score applications that have been determined to be in compliance with the requirements of this subpart. There are six general criteria for scoring applications:

(1) The financial need of the community and the project;

(2) The financial composition of the project;

(3) The comparative rurality of the proposed project service area;

(4) The documented need for services;

(5) Connectivity with outside networks; and

(6) The cost effectiveness of the design.

(b) *Selection.* Applications will be selected for funding based on scores, availability of funds, and the provisions of § 1703.118. The Administrator will make determinations regarding the reasonableness of all numbers; dollar levels; rates; the nature of the project; cost; location; and other characteristics of the application and the proposed project to determine the number of points assigned to an application for all selection criteria. Joint applications submitted by multiple applicants as set forth in § 1703.113 will be rated as a single application.

(c) *Financial need of community and project.* A comparison of the per capita personal income in the county or counties where the project of the beneficiaries are located to the national per capita personal income levels—up to 80 points.

(1) If the per capita personal income level in the county where the grant beneficiaries will be located:

(i) Is less than equal to 80 percent of the national per capita personal income level, 80 points, the maximum number of points;

(ii) Is greater than 80 percent and less than or equal to 90 percent of the national per capita personal income level—60 points;

(iii) Is greater than 90 percent and less than or equal to 100 percent of the national per capita personal income level—30 points;

(iv) Is greater than 100 percent and less than or equal to 110 percent of the national per capita personal income level—5 points;

(v) Exceeds 100 percent of the national per capita personal income level—0 points.

(2) If the project will serve grant beneficiaries in several counties, the Administrator will use an unweighted mean of the counties for the comparison.

(3) RUS will use the most recent annual per capita personal income levels it has obtained from the Bureau of Economic Analysis, U.S. Department of Commerce, or other government sources and processed into a suitable format.

(d) *Financial composition of project.* A comparison of the ability of the applicant to contribute financially to the project, and to secure other non-Federal sources of funding. Criteria include:

(1) Evidence of additional financial support for the project from non-Federal sources above the applicant's required 42.85 percent matching of the RUS grant as set forth in § 1703.104; the applicant must include evidence from authorized representatives of the sources that the funds are available and will be used for the proposed project—up to 60 points.

(i) Matching for allowable grant purposes less than nor equal to 50 percent of the RUS grant—0 points;

(ii) Matching for allowable grant purposes greater than 50 percent, but less than or equal to 100 percent of the RUS grant—10 points;

(iii) Matching for allowable grant purposes greater than 100 percent, but less than or equal to 150 percent of the RUS grant—20 points;

(iv) Matching for allowable grant purposes greater than 150 percent, but less than or equal to 200 percent of the RUS grant—30 points;

(v) Matching for allowable grant purposes greater than 200 percent, but less than or equal to 250 percent of the RUS grant—40 points;

(vi) Matching for allowable grant purposes greater than 250 percent, but less than or equal to 300 percent of the RUS grant—50 points;

(vii) Matching for allowable grant purposes greater than 300 percent of the RUS grant—60 points;

(2) Bonus Points For Community Involvement. In addition to the points allocated under § 1703.117(d)(1), bonus points will be scored for funding supplied by local sources. Criteria include:

(i) Proportion of non-Federal sources of funding supplied by local sources above the applicant's required 42.85 percent matching of the RUS grant. For purposes of this paragraph, local funding sources shall constitute any for-profit or non-profit entity or entities which derive income from the area to be served by the proposed project, and any village, town, county, regional, or other local governmental or public entity whose jurisdiction includes at least part of the proposed project service area. A local funding source shall not include a state or Federal governmental entity. The applicant shall provide evidence from authorized local representatives that the funds are available and will be used for the proposed project—up to 20 points.

(A) Less than or equal to 50 percent to the RUS grant supplied by local funding sources—0 points;

(B) Greater than 50 percent, but less than or equal to 100 percent of the RUS grant supplied by local funding sources—5 points;

(C) Grater than 100 percent, but less than or equal to 150 percent of the RUS grant suppled by local funding sources—10 points;

(D) Greater than 150 percent, but less than or equal to 200 percent of the RUS grant supplied by local funding sources—15 points;

(E) Greater than 200 percent of the RUS grant supplied by local funding sources—20 points, the maximum number of points;

(ii) *Reserved*

(e) *The Comparative Rurality of the Proposed Project Service Area.* (1) This criterion is used after a project service area has been determined eligible in accordance with § 1703.109. The methodology contained in the section is used to evaluate the relative rurality (i.e., population and isolation) of service areas for various projects. Under this system, the end user sites and hubs (as defined in § 1703.102) contained within the proposed project service area are identified. Then, that service area is given a score according to the characteristics for the county(ies) in which the end user sites are located. Evaluation is based on the population of the county or counties, and the location of the county or counties relative to metropolitan statistical areas. This system incorporates a framework based on the classification of nonmetropolitan counties by urbanization and proximity to metropolitan areas, developed by analysts and demographers at the USDA Economic Research Service (ERS), as set forth in appendix A to this subpart.

(2) The following definitions are used in the evaluation of rurality:

(i) Metropolitan statistical area (MSA)—as defined by the Office of Management and Budget (OMB), and MSA includes core counties containing a city of 50,000 or greater population or containing several smaller cities totaling 50,000 or greater population and a total population of at least 100,000. Additional contiguous counties are included in the MSA if they are economically and socially integrated with the core county.

(ii) Metropolitan County—as defined by OMB, a metropolitan county is part

of an MSA and contains a place, or two adjoining places, totaling at least 50,000 in population, and has residents who are economically and socially integrated with a metropolitan core.

(iii) Adjacency to Metropolitan area—the proximity of a county to an MSA measured by a shared boundary with an MSA, and having at least 2 percent of employed county residents commuting to MSA's for employment.

(3) If the end user site(s) for the project are located in a nonmetropolitan county or counties (ERS Rural—Urban Continuum Scale categories 4–9 as set forth in Appendix A to this subpart), the applicant will receive points as follows:

(i) With an ERS category of 9—60 points, the maximum number of points;

(ii) With an ERS category of 8—55 points;

(iii) With an ERS category of 7—40 points;

(iv) With an ERS category of 6—35 points;

(v) With an ERS category of 5—20 points;

(vi) With an ERS category of 4–15 points; or

(vii) With an ERS category of 0 through 3 (metropolitan counties)—0 points.

(4) Applicants having proposed end users sites located in a nonmetropolitan county or counties which are adjacent to a metropolitan area, may receive an adjustment of up to 5 additional points, as determined by the Administrator. Applicants must document that the end users are isolated from urban centers by virtue of available mass transportation, highway infrastructure, or geography.

(5) Applicants having proposed user sites located in a metropolitan county or counties (ERS categories 0–3) may receive 10 points if the population density of the county or counties is no greater than 110 percent of the adjoining nonmetropolitan county with the lowest population density.

(6) If all the end user sites in a proposed network or system are located in a single county or in multiple counties which have the same characteristics, a score will be assigned directly from one of the categories set forth in § 1703.117(e)(3).

(7) If end users sites are located in multiple counties with different characteristics, a weighted average will be calculated using the following:

(i) The total number of end user sites located in rural areas will be determined and be assigned a uniform percentage to be used in a weighted average formula (e.g., with 5 sites, each site would be weighted 20%). A hub will not be counted in a weighted average unless the hub is also utilized as an end user site. For purposes of ranking, if a hub also is utilized as an end user site, the hub will be considered as an end user site.

(ii) The counties which contain end user sites will be identified.

(iii) Each end user site will be assigned a number of points according to the classification system for the county in which it is located.

(iv) The percentage value for each site determined in step 1 will be multiplied by the number of points scored from the site's county classification.

(v) The total points for each end user site, obtained from the calculations in step 4, will be added to reach a final weighted average for the project.

(8) The following example illustrates the provision of paragraph (e)(7) of this section.

Example Calculation. Greenbriar Valley Development Authority has submitted an application for an interactive classroom network which includes a hub in a metropolitan area and 3 end user sites, located in 3 rural counties. The hub is located in a large city and is not utilized as an end user site, so the hub will not be considered part of the network or system.

The first end user site is located in the town of Midway, in Greenbriar County, less than 20,000 adjacent to a metropolitan area. Thus, it has a category of 6 on the ERS Rural—Urban Continuum Scale.

The second end user site is in Lewistown, in Lewis County, which has an aggregate urban population of less than 20,000, not adjacent to a metropolitan area. Thus, it has a category of 7 on the ERS Rural—Urban Continuum Scale.

The third end user site is in the town of Rocky Creek, in Fayette County, which has an aggregate urban population of 20,000 or more, but not adjacent to a metropolitan area. Thus, it has a category of 5 on the ERS Rural—Continuum Scale.

Step (1) The total number of end user sites = 3; thus each end user site receives 33% weight in the formula.

Step (2) The counties identified are Greenbriar, Lewis and Fayette.

Step (3) Greenbriar County, ERS Rural—Urban Continuum Scale category 6 = 30 points;

Lewis County, ERS Rural—Urban Continuum Scale category 7 = 35 points;

Fayette County, ERS Rural Urban Continuum Scale category 5 = 10 points.

Step (4) Midway site—30 points × 33% = 9.9 points Lewistown site—35 points × 33% = 11.6 points

Rocky Creek site—10 points × 33% = 3.3 points

Step (5) 9.9 + 11.6 + 3.3 = 24.8 total weighted average score.

(f) *Documented need for services* (1) This criterion will be used by the Administrator to score applications based on the documentation submitted in the support of the grant application that reflects the need for the services proposed by the project. The applicant should indicate whether or not the proposed services could be provided if RUS grant funds were not available. Up to 60 points can be assigned to this criterion.

(2) The Administrator will consider the extent to which the need for improved educational or medical services in the proposed rural area compares to other regions. RUS will also consider any support by recognized experts in the related educational or medical field, and documentation substantiating the educationally and/or medically underserved nature of the applicant's proposed service area. The Administrator will consider the extent of the applicant's documentation showing:

(i) The justification for specific educational and/or medical services which are needed and will provide direct benefits to rural residents;

(ii) That rural residents, and other beneficiaries, desire the educational and/or medical services to be provided by the project (a strong indication of need is the willingness of local end users or institutions to pay, to the extent possible, for proposed services);

(iii) The applicant's inability to pay for the proposed project without grant funds, given the financial strength of the applicant, its partners, or subsidiaries, as described in § 1703.107(e)(1);

(iv) The project's development and support based on input from the local residents and institutions.

(v) The extent to which the application is consistent with the State strategic plan prepared by the Rural Development State Director of the United States Department of Agriculture.

(3) Examples of the need for medical services could include rural physicians and medical professionals inability to access support functions, such as consulting with others on a diagnosis or access to the latest recommendations in treatment procedures and techniques, up-to-date health-care research, or continuing medical studies. Other medical needs could be to retain more patients at the local hospital or medical facility in order to prevent the closure of the rural hospital or medical facility.

(g) *Connectivity with outside networks.* (1) This criterion will be used by the Administrator to score applications based on the documentation submitted in support of the grant application that reflects the connectivity of the proposed projects with other educational and/or medical networks. Up to 25 points can be assigned to this criterion.

(2) Consideration will be given to the extent that the proposed project will interconnect with other existing networks at the regional, statewide or national levels. RUS believes that to the extent possible, educational and medical networks should be designed to connect to the widest practicable number of other networks that expand the capabilities of the proposed project, thereby affording rural residents opportunities that may not be available at the local level.

(3) Consideration will also be given to the extent that facilities constructed with federal financial assistance, particularly financial assistance under this chapter provided to entities other than the applicant, will be utilized to extend or enhance the benefits of the proposed project.

(h) *Cost effective design*. (1) This criterion will be used by the Administrator to score applications based on the documentation submitted in the support of the grant application that reflects the cost efficiency of the project design. Up to 15 points can be assigned to this criterion.

(2) Consideration will be given to the extent that the proposed technology or technologies for delivering the proposed educational and/or medical services for the project service area are the most cost effective for the type of project proposed, including utilizing the transmission facilities of the local telecommunications provider. The Administrator will consider the applicant's documentation comparing various systems and technologies, and the choice of the applicant's system as being the most cost-effective system. The Administrator will also consider the applicant's documentation relating to buying or leasing options for specific equipment. The application must contain information necessary for the Administrator to use accepted analytical and financial methodologies to determine whether the applicant is proposing the most cost-effective option.

§ 1703.118 Other application selection and appeal provisions.

(a) Regardless of the number of points an application receives in accordance with § 1703.117, the Administrator may, based on his/her review of the applications in accordance with the requirements of this part:

(1) Limit the number of applications selected for projects located in any one state during a fiscal year;

(2) Limit the number of selected applications for a particular project; and

(3) Select an application receiving fewer points than another higher scoring application if there are insufficient funds during a particular funding period to select the higher scoring application; provided, however, the Administrator may ask the applicant of the higher scoring application if it desires to reduce the amount of its application to the amount of funds available if, notwithstanding the lower grant amount, the Administrator determines the project is financially feasible in accordance with § 1703.107(h) at the lower amount.

(b) The Administrator will not approve a grant application if he/she determines that:

(1) The applicant's proposal does not indicate financial feasibility or is not sustainable in accordance with the requirements of § 1703.107(e) (1) and (2);

(2) The applicant's proposal indicates technical flaws, which, in the opinion of the Administrator, would prevent successful implementation, operation, or sustainability of the proposed project; or

(3) Any other aspect of the applicant's proposal fails to adequately address any requirements of this subpart or contains inadequacies which would, in the opinion of the Administrator, undermine the ability of the project to meet the general purpose of this part or comply with policies of the Distance Learning and Telemedicine Grant Program set forth in § 1703.101.

(c) The Administrator may reduce the amount of the applicant's grant award based on insufficient program funding for the fiscal year in which the project is reviewed if the Administrator determines that, notwithstanding a lower grant award, the project will show financial feasibility in accordance with § 1703.107(e), and the program purposes set forth in § 1703.100 can be met. RUS will discuss its findings informally with the applicant and make every effort to reach a mutually acceptable agreement with the applicant. Any discussions with the applicant and agreements made with regard to a reduced grant amount will be confirmed in writing, and these actions shall be deemed to have met the notification requirements set forth in paragraph (d) of this section.

(d) The Administrator will provide the applicant an explanation of any determinations made with regard to paragraphs (b)(1) through (b)(3) of this section prior to making final project funding selections for the year. The applicant will be provided 15 days from the date of the Administrator's letter to respond, provide clarification, or make any adjustments or corrections to the project. If, in the opinion of the Administrator, the applicant fails to adequately respond to any determinations or other findings made by the Administrator, the project will not be funded, and the applicant will be notified of this determination.

(e) For Fiscal Year 1996 grant applications, RUS will notify all grant applicants of the numerical scoring each complete grant application received and the cutoff points needed to receive funding for Fiscal Year 1996. If the grant application numerical scoring is below the score necessary to obtain funding, the applicant may appeal the numerical scoring to the Secretary in writing not later than 10 days after the applicant is notified of the scoring level. The applicant must state the reason it is appealing the numerical scoring and submit the reasons the application should be reconsidered. RUS will allow 14 days after the close of the appeal period to make the final grant selections for Fiscal Year 1996.

(f) RUS reserves the right to use other data it considers most appropriate if ''county'' data is unavailable for a particular area. In those cases, the Administrator will use data compiled on a basis of the equivalent of a county in the state, such as a parish, or on another basis that most approximates ''county'' level data.

§§ 1703.119–1703.121 [Reserved]

§ 1703.122 Further processing of selected applications.

(a) During the period between the selection of the application and the execution of implementing documents, the applicant must inform the Administrator if the project is no longer viable or the applicant no longer desires a grant for the project. If the applicant so informs the Administrator, the selection will be rescinded and written notice to that effect shall be sent promptly to the applicant.

(b) If an application has been selected and the nature of the project changes, the applicant may be required to submit a new application to the Administrator for consideration depending on the degree of change. A new application will be subject to review in accordance with this subpart. The selection may not be transferred to another project.

(c) If state or local governments raise objections to a proposed project under the intergovernmental review process that are not resolved within 3 months of the Administrator's selection of the application, the Administrator may rescind the selection and written notice to that effect will be sent promptly to the applicant.

(d) Recipients of grants will be required to submit RUS Form 479–A,

''Distance Learning and Telemedicine Technical Questionnaire.''

(e) After an applicant has submitted such additional information, if any, the Administrator determines is necessary for completing the grant documents, the Administrator will send the documents to the applicant to execute and return to RUS.

(1) The grant documents will include a letter of agreement and any other legal documents the Administrator deems appropriate, including suggested forms of certifications and legal opinions.

(2) The letter of agreement will, among other things, constitute the Administrator's approval of funds for the project subject to certain terms and conditions and include at a minimum, a project description, approved purposes of the grant, the maximum amount of the grant, supplemental funds to be provided to the project and certain agreements or commitments the applicant may have proposed in its application.

(f) Until the letter of agreement has been executed and delivered by RUS and by the applicant, the Administrator reserves the right to require any changes in the project or legal documents covering the project to protect the integrity of the program and the interests of the United States Government.

(g) If the applicant fails to submit, within 120 calendar days from the date of the Administrator's selection of an application, all of the information that the Administrator determines to be necessary to prepare legal documents and satisfy other requirements of this subpart, the Administrator may rescind the selection of the application and written notice to that effect will be sent promptly to the applicant.

§§ 1703.123–1703.125 [Reserved]

§ 1703.126 Disbursement of grant funds.

(a) For grants of $100,000 or greater, prior to the disbursement of funds, the grantee, if it is not a unit of government, will provide evidence of fidelity bond coverage as required by § 3015.17 of this title.

(b) Grant funds will be disbursed to grantees on a reimbursement basis, or with unpaid invoices for the eligible purposes set forth in this subpart, by the following process:

(a) An SF 270, ''Request for Advance or Reimbursement,'' will be completed by the applicant and submitted to RUS not more frequently than once a month; and

(2) After receipt of a properly completed SF 270, payment will ordinarily be made within 30 days.

(c) The grantee's share in the cost of the project will be disbursed in advance of grant funds, or if the grantee agrees, on a pro rata distribution basis with grant funds during the disbursement period. Grantee will not be permitted to provide its contribution at the end of the project.

§ 1703.127 Reporting and oversight requirements.

(a) A project performance activity report will be required of all grantees on a semi-annual basis.

(b) A final project performance report will be required. It must provide an evaluation of the success of the project in meeting the objectives of the program. The final report may serve as the last semi-annual report.

(c) RUS will monitor grant recipients as necessary to assure that projects are completed in accordance with the approved scope of work and that funds are expended for approved purposes. Grants made under this part will be administered under, and are subject to parts 3015 through 3018 of this title.

(d) Grantees shall diligently monitor performance to ensure that time schedules are being met, projected work by time periods is being accomplished, and other performance objectives are being achieved. Grantees are to submit an original and one copy of each report to RUS. The project performance reports shall include, but not be limited to, the following:

(1) A comparison of actual accomplishments to the objectives established for that period;

(2) Reasons why established objectives were not met;

(3) A description of any problems, delays, or adverse conditions which have occurred, or are anticipated, and which may affect the attainment of overall project objectives, prevent the meeting of time schedules or objectives, or preclude the attainment of particular project work elements during established time periods. This disclosure shall be accompanied by a statement of the action taken or planned to resolve the situation; and

(4) Objectives and timetable established for the next reporting period.

§ 1703.128 Audit requirements.

The grantee will provide an audit report in accordance with part 3015, subpart I, of this title. The audit requirements only apply to the year(s) in which grant funds are received. Audits must be prepared in accordance with generally accepted government auditing standards (GAGAS) using publication, ''Standards for Audit of Governmental Organization, Program, Activities and Functions.''

§§ 1703.129–1703.134 [Reserved]

§ 1703.135 Grant administration.

(a) The Administrator will review grantees, as necessary, to determine whether funds were expended for approved purposes. The grantee is responsible for ensuring that the project complies with all applicable regulations, and that the grant funds are expended only for approved purposes. The grantee is responsible for ensuring that disbursements and expenditures of funds are properly supported by invoices, contracts, bills of sale, canceled checks, or other appropriate forms of evidence, and that such supporting material is provided to the Administrator, upon request, and is otherwise made available, at the grantee's premises, for review by the RUS representatives, grantee's certified public accountant, the Office of Inspector General, U.S. Department of Agriculture, the General Accounting Office and any other officials conducting an audit of the grantee's financial statements or records, and program performance under the grant awarded under this subpart. Grantees will be required to permit RUS to inspect and copy any records and documents that pertain to the project.

(b) Grants provided under this program will be administered under, and are subject to parts 3015 and 3016 of this title, as appropriate. Parts 3015 and 3016 of this title subject grantees to a number of requirements which cover, among other things, financial reporting, accounting records, budget controls, record retention and audits, bonding and insurance, cash depositories for grant funds, grant related income, use and disposition of real property and/or equipment purchased with grant funds, procurement standards, allowable costs for grant related activities, and grant close-out procedures.

§ 1703.136 Changes in project objectives or scope.

The grantee will obtain prior approval for any material change to the scope or objectives of the approved project, including changes to the scope of work or budget. Failure to obtain prior approval of changes can result in suspension or termination of grant funds.

§ 1703.137 Grant termination provisions.

(a) *Termination for cause.* The Administrator may terminate any grant in whole, or in part, at any time before the date of completion of grant disbursement, whenever it is

determined that the grantee has failed to comply with the conditions of the grant. The Administrator will promptly notify the grantee in writing of the determination and the reasons for the termination, together with the effective date.

(b) *Termination for convenience.* The Administrator or the grantee may terminate a grant in whole, or in part, when both parties agree that the continuation of the project would not produce beneficial results commensurate with further expenditure of funds. The two parties will agree upon termination conditions, including the effective date, and in the case of partial terminations, the portion to be terminated. The grantee will not incur new obligations for the terminated portion after the effective date, and will cancel as many outstanding obligations as possible. The Administrator will allow full credit to the grantee for the Federal share of the noncancelable obligations, properly incurred by the grantee prior to termination.

§§ 1703.138–1703.139 [Reserved]

§ 1703.140 Expedited telecommunication loans

(a) *General.* (1) The Administrator will afford expedited consideration and determination to an application for a loan or a request for advance of funds submitted by a local exchange carrier pursuant to section 2334(h) of the Act (7 U.S.C. 950aaa *et seq.*).

(2) Funds obtained through the expedited procedures established by this section must be used primarily to provide advanced telecommunication services in rural areas using a telecommunications project that the Administrator has approved under this subpart.

(3) Only those elements of a telecommunications project that have not been funded in whole, or in part, with a grant made under this subpart are eligible for expedited consideration or determination under this section.

(b) *Expeditied loan applications.* (1) In order to qualify for expedited consideration or determination under paragraph(a)(1) of this section, the loan application must:

(i) Be from a local exchange carrier that will use the requested funds for the purpose set forth in paragraph(a)(2) of this section;

(ii) Be a completed one that complies with the requirements of part 1737, subpart C, of this chapter; and

(iii) Be received concurrently with the related grant application or within 14 days of the date notice of such application is published in the Federal Register as set forth in § 1703.113(d).

(2) Expedited consideration and determination of a qualifying application for a loan under this section means that within 45 days of receipt or 45 days of selection of the related grant application, whichever occurs later, the Administrator will:

(i) Issue a characteristics letter, as set forth in part 1737, subpart I, of this chapter, to the loan applicant; or

(ii) Inform the loan applicant that its application for a loan has been denied.

(c) *Expedited advances.* (1) In order to qualify for expedited consideration or determination under paragraph(a)(1) of this section, the request for advance of funds must:

(i) Be from a local exchange carrier that will use the funds for the purpose set forth in paragraph(a)(2) of this section;

(ii) Be for all or part of a loan which has received release approval pursuant to part 1737, subpart K, of this chapter; and

(iii) Be in compliance with the requirements of part 1744 of this chapter.

(2) Expedited consideration and determination of a qualifying request for advance of loan funds under this section means that the Administrator will advance funds to the borrower within 45 days of receiving a request which complies with the provision of this section.

Appendix A to Subpart D of Part 1703—ERS Rural—Urban Continuum Scale

ERS Rural—Urban Continuum Codes:

Metropolitan Counties:

0—Central counties of metropolitan areas of 1 million population or more.

1—Fringe counties of metropolitan areas of 1 million population or more.

2—Counties in metropolitan areas of 250 thousand to 1 million population.

3—Counties in metropolitan areas of less than 250 thousand population.

Nonmetropolitan Counties:

4—Aggregate urban population (sum of cities, towns, villages or other incorporated communities of 2,500 or more) of 20,000 or more, adjacent to metropolitan area.

5—Aggregate urban population of 20,000 or more, not adjacent to a metropolitan area.

6—Aggregate urban population of 2,500 of 19,999, adjacent to a metropolitan area.

7—Aggregate urban population of 2,500 to 19,999, not adjacent to a metropolitan area.

8—Completely rural (no cities, towns, villages or other incorporated areas of 2,500 or greater) adjacent to a metropolitan area.

9—Completely rural, not adjacent to a metropolitan area.

Notes: Metropolitan status is that announced by the Office of Management and Budget in June 1993, when the current population criteria were first applied to results of the 1990 Census. Adjacency was determined by physical boundary adjacency and a finding that at least 2 percent of the employed labor force in the nonmetropolitan county commuted to metropolitan central counties.

Codes prepared in Rural Economy Division, Economic Research Service, USDA. A listing of counties and corresponding codes are available from ERS at the following address:

Room 337, 1301 New York Avenue, NW, Washington, DC 20005–4788, Phone: (202) 219–0534

or through the Internet via the ERS Home Page or directly at the following Internet address:

gopher://usda.mannlib.cornell.edu:70/11data-sets/rural/89021

Appendix B to Subpart D of Part 1703—Environmental Questionnaire

Note: It is extremely important to respond to *all* questions completely to ensure expeditious processing of the Distance Learning and Telemedicine grant. The information herein is required by Federal law.

Important: *Any activity related to the project that may adversely affect the environment or limit the choice of reasonable development alternatives shall not be undertaken prior to the completion of Rural Utilities Service's environmental review process.*

Legal Name of Applicant _____

Signature (Type/Sign/Date) _____

The applicant's representative certifies, to the best of his/her knowledge and belief, that the information contained herein is accurate. Any false information may result in disqualification for consideration of the grant or rescission of the grant.

I. Project Description—Detailing construction, including, but not limited to, internal or external modifications of existing structures, new building construction, and/or installation of telecommunications transmission facilities (defined in 7 CFR 1703.102), including satellite uplinks or downlinks, microwave transmission towers, and cabling.

1. Describe the portion of the project, and site locations (including legal ownership of real property), involving internal modifications, or equipment additions to buildings or other structures (e.g., relocating interior walls or adding computer facilities) for *each* site.

2. Describe the portion of the project, and site locations (including legal ownership or real property) involving external changes or additions to existing buildings, structures or facilities requiring physical disturbance of less than .99 acres. List the size of *each* individual site in acres and *attach a diagram showing the general layout* of the proposed facilities for *each* site.

3. Describe the portion of the project, and site locations (including legal ownership or real property), involving construction of transmission facilities, including cabling, microwave towers, satellite dishes; or, new construction of buildings; or, disturbance of

property of .99 acres or greater for *each* project site.

4. Describe the nature of the proposed use of the facilities, and whether any hazardous materials, air emissions, wastewater discharge or solid waste will result.

5. State whether or not any project site(s) contain or are near properties listed or eligible for listing in the National Register of Historic Places, and identify any historic properties (The grantee must supply evidence that the State Historic Preservation Officer (SHPO) has cleared development regarding any historical properties).

6. Provide information whether or not any facility(ies) or site(s) are located in a 100-year floodplain. A National Flood Insurance Map should be included reflecting the location of the project site(s).

II. For projects which involve construction of transmission facilities, including cabling, microwave towers, satellite dishes, new construction of buildings, or physical disturbance of real property of .99 acres or greater, the following information *must* be submitted (7 CFR 1703.107(j)(3))

1. A map (preferably a U.S. Geological Survey map) of the area for each site affected by construction (include as an attachment).

2. A description of the amount of property to be cleared, excavated, fenced or otherwise disturbed by the project and a description of the current land use and zoning and any vegetation for each project site affected by construction.

3. A description of buildings or other structures (i.e., transmission facilities), including dimensions, to be constructed or modified.

4. A description of the presence of wetlands or existing agricultural operations and/or threatened or endangered species or critical habitats on or near the project site(s) affected by construction.

5. Describe any actions taken to mitigate any environmental impacts resulting from the proposed project (use attachment if necessary).

Note: The applicant may submit a copy of any environmental review, study, assessment, report or other document that has been prepared in connection with obtaining permits, approvals or other financing for the proposed project from State, local or other Federal bodies. Such material, to the extent relevant, may be used to meet the requirements herein.

Dated: June 21, 1996.

Jill Long Thompson,

Under Secretary, Rural Development.

[FR Doc. 96–16321 Filed 6–26–96; 8:45 am]

BILLING CODE 3410–15–M

DEPARTMENT OF AGRICULTURE

Rural Utilities Service

Distance Learning and Telemedicine Grant Program

AGENCY: Rural Utilities Service, USDA.

ACTION: Notice of application filing deadline for Fiscal Year 1996 funding.

SUMMARY: The Rural Utilities Service (RUS) hereby announces that applications are now being accepted for the Distance Learning and Telemedicine (DLT) Grant Program for Fiscal Year (FY) 1996 funding. The final rule, 7 CFR Part 1703, subpart D, amending the DLT Grant Program is published elsewhere in today's issue of the Federal Register.

DATES: Applications to be considered for FY 1996 funding must be postmarked no later than August 5, 1996.

ADDRESSES: Applications may be submitted to the Administrator, Rural Utilities Services, U.S. Department of Agriculture, STOP 1590, 14th and Independence Ave., SW., Washington, DC 20250. Applications should be marked ''Attention: Assistant Administrator, Telecommunications Program.''

FOR FURTHER INFORMATION CONTACT: Barbara L. Eddy, Deputy Assistant Administrator, Telecommunications Program, Rural Utilities Service, room 4056-South Building, STOP 1590, U.S. Department of Agriculture, Washington, DC 20250, telephone number (202) 720–9549.

SUPPLEMENTARY INFORMATION: Pursuant to 7 CFR 1703.113, Application filing dates, location, processing, and public notification, the amount of funds available for grants during FY 1996 is $7.5 million and the deadline for submitting applications for FY 1996 DLT grants is August 5, 1996. The maximum amount awarded to any application selected for FY 1996 will not exceed $350,000 (See 7 CFR 1703.106). Applicants are reminded to submit an original and three copies of the completed application and to also submit a copy to the State government point of contact at the same time an application is submitted to RUS (See 7 CFR 1703.113(f)).

Application information packages containing various forms and guidelines for completing and submitting a grant application to RUS, as well as general information about the DLT grant program, are available through any of the following sources:

(1) The Internet via the RUS Home Page at the following Internet address: http://www.usda.gov/rus/dlml.htm.

(2) The U.S. Department of Agriculture Rural Development State Director's office, if established for the applicant's State; addresses of State contact offices are available through the RUS Home Page or from RUS Telecommunications Program area offices, Washington, DC.

(3) The RUS Telecommunications Program area offices, Washington, DC. Requests for application packages must be faxed to the area office representing the applicant's State. A list of area offices follows:

Southeast Area, Craig Wulf, Director, room 2870-South Building, STOP 1596. Telephone number (202) 720–0715, Fax number (202) 205–2924. States served: Alabama, Florida, Georgia, Illinois, Indiana, Kentucky, Mississippi, North Carolina, South Carolina, Tennessee, Virginia, Puerto Rico, and Virgin Islands.

Northeast Area, Gerald Nugent, Jr., Director, room 2859-South Building, STOP 1596. Telephone number (202) 720–8268, Fax number (202) 205–3934. States served: Connecticut, Delaware, Maine, Maryland, Massachusetts, Michigan, New Hampshire, New Jersey, New York, Ohio, Pennsylvania, Rhode Island, Vermont, and Wisconsin.

Northwest Area, Jerry Brent, Director, room 2813-South Building, STOP 1597. Telephone number (202) 720-0803, Fax number (292(205–2921. States served: Alaska, Idaho, Iowa, Minnesota, Montana, Missouri, North Dakota, Oregon, South Dakota, Washington, and Wyoming.

Southwest Area, Ken Chandler, Director, room 2808-South Building, STOP 1597. Telephone number (202) 720–0800, Fax number (202) 205–2921. States served: Arizona, Arkansas, California, Colorado, Kansas, Louisiana, Nebraska, Nevada, New Mexico, Oklahoma, Texas, Utah, Guam, Marshall Islands, Micronesia, North Mariana Islands, and Palau.

Dated: June 20, 1996.

Wally Beyer,

Administrator, Rural Utilities Service.

[FR Doc. 96–16321 Filed 6–26–96; 8:45 am]

BILLING CODE 3410–15–M

Reader Aids

Federal Register

Vol. 61, No. 125

Thursday, June 27, 1996

CUSTOMER SERVICE AND INFORMATION

Federal Register/Code of Federal Regulations

General Information, indexes and other finding aids	**202–523–5227**
Public inspection announcement line	**523–5215**

Laws

Public Laws Update Services (numbers, dates, etc.)	**523–6641**
For additional information	**523–5227**

Presidential Documents

Executive orders and proclamations	**523–5227**
The United States Government Manual	**523–5227**

Other Services

Electronic and on-line services (voice)	**523–4534**
Privacy Act Compilation	**523–3187**
TDD for the hearing impaired	**523–5229**

ELECTRONIC BULLETIN BOARD

Free Electronic Bulletin Board service for Public Law numbers, Federal Register finding aids, and list of documents on public inspection. **202–275–0920**

FAX-ON-DEMAND

You may access our Fax-On-Demand service. You only need a fax machine and there is no charge for the service except for long distance telephone charges the user may incur. The list of documents on public inspection and the daily Federal Register's table of contents are available using this service. The document numbers are 7050-Public Inspection list and 7051-Table of Contents list. The public inspection list will be updated immediately for documents filed on an emergency basis.

NOTE: YOU WILL ONLY GET A LISTING OF DOCUMENTS ON FILE AND NOT THE ACTUAL DOCUMENT. Documents on public inspection may be viewed and copied in our office located at 800 North Capitol Street, N.W., Suite 700. The Fax-On-Demand telephone number is: **301–713–6905**

FEDERAL REGISTER PAGES AND DATES, JUNE

27767–27994 3
27995–28466 4
28467–28722 5
28723–29000 6
29001–29266 7
29267–29458 10
29459–29632 11
29633–29922 12
29923–30126 13
30127–30494 14
30495–30796 17
30797–31002 18
31003–31386 19
31387–31816 20
31817–32316 21
32317–32628 24
32629–32910 25
32911–33302 26
33303–33640 27

CFR PARTS AFFECTED DURING JUNE

At the end of each month, the Office of the Federal Register publishes separately a List of CFR Sections Affected (LSA), which lists parts and sections affected by documents published since the revision date of each title.

3 CFR

Proclamations:
6902 28465
6903 29633
6904 30797
6905 32911

Executive Orders:
October 22, 1854 (Revoked in part by PLO 7022) 29758
February 1, 1886 (See PLO 7148) 29129
April 13, 1912 (Revoked by PLO 7200) 29758
December 31, 1912 (Revoked in part by PLO 7199) 29128
12880 28721
12963 (Amended by EO 13009) 30799
13008 28721
13009 30799

Administrative Orders:
Presidential Determinations:
96–27 of May 28, 1996 29001
96–28 of May 29, 1996 29453
96–29 of May 31, 1996 29455
96–30 of June 3, 1996 29457
96–31 of June 6, 1996 30127
96–32 of June 14, 1996 32629
96–33 of June 21, 1996 32631
Memorandums:
96–26 of May 22, 1996 27767

5 CFR

251 32913
532 .....27995, 27996
2634 32633

Proposed Rules:
2429 28797
2470 28797
2471 28798
2472 28798
2473 28798

7 CFR

6 28723
10 30495
29 .....27997, 29923, 29924
301 .....31003, 32636, 32900
610 27998
782 32641
911 31004
915 31004
916 .....31006, 31387
917 .....31006, 31387
922 30495
928 28000
929 30497
946 31006
948 29635
981 32917
982 29924
985 .....2945, 32922
997 29926
998 29927
999 31306
1205 31817
1208 30498
1230 28002
1240 .....29461, 33175
1439 32643
1464 33303
1475 32643
1485 32644
1703 33622
2018 32655

Proposed Rules:
457 .....27512, 31464
911 33047
927 33047
928 33388
944 33047

8 CFR

3 32924
103 28003
204 33304
242 32924
299 28003

Proposed Rules:
214 30188
273 29323

9 CFR

92 31391
94 32646
112 33175
113 31822

Proposed Rules:
1 30545
3 30545
92 .....27797, 28073
95 30189
101 29462
112 29462
113 31822

10 CFR

30 29636
40 29636
50 30129
51 28467
70 29636
71 28723
72 29636

436 32647
1703 28725
Proposed Rules
20 31874
34 30837
35 33388
150 30839
170 30839
430 28517

11CFR

100 31824
110 31824
114 31824

12 CFR

219 ....29638, 32317
336 28725
615 31392
747 28021
Proposed Rules:
204 30545
229 27802
543 32713
544 32713
545 ....29976, 30190, 32713
552 32713
556 ....30190, 32713
559 29976
560 ....29976, 30190
563 ....29976, 30190, 32713
567 29976
571 ....29976, 30190
575 32713
703 29697
704 28085
709 28085
741 28085
1270 29592

14 CFR

1 31324
25 28684
27 ....29928, 29931
29 29931
33 ....28430, 31324
39 ....28028, 28029, 28031, 28497, 28498, 28730, 28732, 28734, 28736, 28738, 29003, 29007, 29009, 29267, 29269, 29271, 29274, 29276, 29278, 29279, 29465, 29467, 29468, 29641, 29642, 29931, 29932, 29934, 30501, 30505, 30801, 31007, 31009, 31824, 31825, 32317, 32318, 33305
71 ....28033, 28034, 28035, 28036, 28037, 28038, 28039, 28040, 28041, 28042, 28043, 28044, 28045, 28740, 28741, 28742, 28743, 29472, 29645, 29336, 29937, 29938, 30507, 30670, 30803, 31013, 31014, 31015, 31016, 31017, 31018, 31019, 31020, 32322, 32651
73 ....30508, 31021, 31022
91 28416
95 27769
97 ....29015, 29016, 31827, 31828, 31830
119 30432
121 ....28416, 30432, 30726, 30734
125 28416
135 ....28416, 30432, 30734
302 29282
373 29284
399 ....29018, 29645, 29646
Proposed Rules:
Ch. I 28803
39 ....28112, 28114, 28518, 28520, 29038, 29499, 29501, 29697, 29992, 29994, 29996, 30548, 31059, 31061, 32369, 33049, 33050
71 ....28803, 29449, 29699, 29700, 30550, 30842, 30843, 31063, 31064, 31065, 31066, 31067, 31068, 31069, 32371, 32372, 32374, 33390
121 ....29000, 30551
135 30551
241 32375
250 27818

15 CFR

Ch. XII 30509
902 ....31228, 32538
Proposed Rules:
902 29628
946 28804

16 CFR

Ch. I 32323
305 29939
409 33308
1010 29646
1019 29646
1500 33175
Proposed Rules:
419 29039

17 CFR

210 30397
228 ....30376, 30397
229 ....30376, 30397
230 30397
232 30397
239 30397
240 ....30376, 30396, 30397
249 ....30376, 30397
Proposed Rules:
1 28806
230 30405
239 30405
240 30405
249 30405
274 30405

18 CFR

35 ....30509, 31394
37 30804
385 ....30509, 31394

19 CFR

10 28932
12 ....28500, 28932
102 ....28932, 32924
134 ....28932, 32924
178 28500
Proposed Rules:
19 28808
101 30552
113 28808
122 30552
132 28522
144 28808
151 28522
351 28821
353 28821
355 28821

20 CFR

209 31395
404 ....28046, 31022
416 31022

21 CFR

14 ....28047, 28048
20 33232
70 28525
73 28525
74 28525
80 28525
81 28525
82 28525
100 27771
101 ....27771, 28525
103 27771
104 27771
105 27771
109 27771
137 27771
161 27771
163 27771
172 27771
175 29474
177 ....28049, 29474
178 ....28051, 28525, 31395
182 27771
186 27771
189 29650
197 27771
200 29476
201 28525
250 29476
310 29476
520 ....29477, 29650, 31027, 31397
522 ....29478, 29479, 29480, 31027, 31028
556 ....29477, 31028, 31398
558 ....29477, 29481, 30133, 32651
700 27771
701 28525
814 33232
1309 32925
1310 32925
Proposed Rules:
1 28116
2 28116
3 28116
5 28116
10 28116
12 28116
20 28116
56 28116
58 28116
70 29701
71 29701
80 29701
101 ....28525, 29701, 29708
107 29701
170 ....29701, 29711
171 ....29701, 29711
172 ....29701, 29711
173 ....29701, 29711
174 29701
175 ....29701, 29711
176 29711
177 ....29701, 29711
178 ....29701, 29711
182 29711
184 ....29701, 29711
200 29502
250 29502
310 29502
343 30002
500 31468
730 29708
801 32618
864 30197
1250 29701

22 CFR

4 32327
50 29651
51 29940
81 29940
82 29940
83 29940
84 29940
85 29940
86 29940
87 29940
88 29940
89 29941
126 33313
514 29285
Proposed Rules:
603 30009

23 CFR

1206 28745
1215 28747
1230 28750
Proposed Rules:
655 ....29234, 29624
777 30553

24 CFR

92 32220
290 32192
570 32196
954 32220
3500 ....59238, 29255, 29258, 29264
Proposed Rules:
35 29170
36 29170
37 29170

25 CFR

63 32200
65 27780
66 27780
76 27780
900 32482
Proposed Rules:
1 27821
2 31875
142 31470
150 27822
154 30559
161 29285
162 30560
166 27824
175 29040
217 27831
271 27833
272 27833
274 27833
277 27833
278 27833
290 29044

26 CFR

1 ....30133, 32653, 32926, 33321, 33335,
26 29653
40 28053
48 28053

301 33365
602 ....30133, 33313, 33321, 33335, 33365
Proposed Rules:
1 ....27833, 27834, 28118, 28821, 28823, 30845, 31473, 31474, 32728, 33391, 33393, 33395, 33396, 33405
26 29714
31 28823
35a 28823
301 ....28823, 29653, 30012, 33408
502 28823
503 28823
509 28823
513 28823
514 28823
516 28823
517 28823
520 28823
521 28823
602 29653

27 CFR

9 ....29949, 29952
17 31399
19 31399
24 31029
70 ....29954, 31029, 31399
71 29954
170 ....31029, 31399
194 31399
200 29956
250 31399
Proposed Rules:
0 30013
5 30015
18 30017
20 30019
22 30019
70 30013
250 30021

28 CFR

Proposed Rules:
74 ....29715, 29716
513 32186

29 CFR

1910 31477
1915 ....29957, 31427
1926 31427
1952 28053
2619 30160
2676 30160
Proposed Rules:
102 30570
1904 27850
1915 28824
1952 27850
2509 29586

30 CFR

75 29287
906 32328
925 31610
943 30805
Proposed Rules:
218 28829
250 28525
256 28528
935 ....29504, 32382
946 ....29506, 31071

31 CFR

Ch. V 32936
Proposed Rules:
202 31879
356 31072

32 CFR

Proposed Rules:
619 33409

33 CFR

Ch. IV 32655
3 29958
62 ....27780, 29449
100 ....27782, 28501, 28502, 28503, 29019, 32328, 32331, 32333, 33027, 33371
117 ....29654, 29959, 31434
165 ....28055, 29020, 29021, 29022, 29655, 29656
Proposed Rules:
117 31881

34 CFR

535 31350
562 31350
600 29898
639 32656
651 32656
652 32656
667 32656
668 ....29898, 29960, 31035
685 ....29898, 31358
Proposed Rules:
701 27990

36 CFR

6 28504
7 ....28505, 28751
17 28506
1228 32335
1232 32335
Proposed Rules:
3 32383
7 28530

37 CFR

201 30845
Proposed Rules:
202 ....28829, 33052

38 CFR

1 ....29023, 29024, 29481, 29657
2 27783
6 29024
7 29025
8 29289
8a 29027
14 27783
17 29293
20 29027
21 ....28753, 28755, 29028, 29294, 29297, 29449
36 28057
Proposed Rules:
38 31479

39 CFR

233 28059
3001 32656
Proposed Rules:
111 32606

40 CFR

9 33202
15 28755
32 28755
51 ....30162, 32339
52 ....28061, 29483, 29659, 29662 29961, 29963, 29965, 29970, 31035, 31831, 32339, 32341, 33372
55 28757
60 ....29485, 29876
62 29666
63 ....27785, 29485, 29876, 30814, 30816, 31435
68 ....31668, 31730
70 ....31442, 32693
73 28761
80 ....28763, 33034
81 ....29667, 29970, 31831
82 29485
152 ....30163, 33039
170 33202
180 ....29672 29674, 29676, 30163, 30165, 30167, 30170, 30171, 31037, 33041
185 33041
186 30171
180 33469
264 28508
265 28508
270 28508
271 ....28508, 32345, 32700
300 ....27788, 28511, 29678, 30510
716 32702
721 ....33373, 33374
799 ....29486, 33044, 33375
Proposed Rules:
Ch. I 31883
35 30472
50 29719
52 ....28531, 28541, 29508, 29515, 29725, 30023, 30024, 31073, 31885, 32385, 32386, 33414
59 32729
60 ....31736, 33415
61 33053
62 29725
63 30846
70 ....30570, 32391
73 ....28830, 28996
80 33051
81 ....28541, 29508, 29515, 29726, 32386
86 33421
152 33260
156 33260
180 ....28118, 28120, 30200, 30202, 30204, 31073, 31075, 31077, 31079, 31081, 33054, 33058
185 ....31081, 33469
186 ....30204, 33469
261 ....32746, 32753
270 30472
271 30472
300 ....30207, 30575, 32765
372 33588
799 33178

41 CFR

50–203 32910
Proposed Rules:
101–20 30028

42 CFR

405 32347
417 32347
431 32347
473 32347
498 32347
Proposed Rules:
72 29327
412 29449
413 29449
489 29449

43 CFR

2120 29030
2920 32351
4100 29030
4600 29030
Proposed Rules:
6000 28546
6100 28546
6200 28546
6300 28546
6400 28546
6500 28546
6600 28546
7100 28546
7200 28546
7300–9000 28546
8000 29678
8300 29679

44 CFR

64 ....28067, 32704
65 ....29488, 29489
67 29490
Proposed Rules:
67 29518

46 CFR

Ch. III 32655
108 ....28260, 33044
110 ....28260, 33044
111 ....28260, 33044
112 ....28260, 33044
113 ....28260, 33044
161 ....28260, 33044
252 32705
272 32706
Proposed Rules:
10 31332
15 31332
540 33059

47 CFR

Ch. I 30531
0 ....29311, 31044
2 31044
15 ....29679, 30532, 31044
22 ....29679, 31051
24 29679
73 ....28766, 29311, 29491, 29492, 31449, 32706, 33377
74 28766
76 ....28698, 29312, 32706, 32707
90 ....31051, 32709
95 ....28768, 32710
101 ....29679, 31051
Proposed Rules:
Ch. I 30579, 32766, 33066
0 28122
25 32399
36 ....30028, 30847
64 ....30581, 31481, 33074
69 ....30028, 30847
73 ....30584, 30585, 31083, 31084, 31085, 31489, 31490, 33474

76.....29333, 29336
80.....28122

48 CFR

Ch. I.....31612
4.....31616, 31617
6.....31618
14.....31618, 31619
15 .....31618, 31619, 31620
16.....31621
17.....31618
19 .....31622, 31642, 31643
22.....31643
23.....31645
25 .....31618, 31646, 31649, 31650
27.....31617, 31646
28.....31651
31 .....31655, 31656, 31657
32.....31658
33.....31658
34.....31659
37.....31660
42 .....31621, 31658, 31660
46.....31661, 31662
52 .....31616, 31617, 31618, 31619, 31621, 31642, 31643, 31645, 31646, 31650, 31651, 31658, 31659, 31660, 31663, 31664, 31665
911.....30823
917.....32584
952.....30823
970.....30823, 32584
1452.....31053
1453.....31053

Proposed Rules:

5.....32580
9.....31814
12.....32240
13.....31814, 32580
14.....32580
15.....32580
16.....31798
19.....32580
23.....31814
25.....32580
26.....31792
31 .....31790, 31796, 31800
33.....32580
36.....32580
45.....27851
52 .....27851, 31792, 31798, 31814
216.....31490
222.....31490
225.....31490
227.....31490
228.....31490
229.....31490
232.....31490
233.....31490
236.....31490
246.....31490
252.....31490
917.....32588
950.....32588
952.....32588
970.....32588
1501.....29314
1509.....29314
1510.....29314
1515.....29314
1528.....29493
1532.....29314
1552.....29314, 29493
1553.....29314
1602.....32401
1604.....32401
1615.....32401
1616.....32401
1622.....32401
1631.....32401
1644.....32401
1652.....32401
1653.....32401
6101.....32410

49 CFR

Ch. I.....30444
27.....32354
28.....32354
35.....32900
56.....32900
92.....32900
106.....30175
107.....27948
130.....30533
171 .....28666, 33216, 33250
172.....28666
173 .....28666, 33216, 33250
174.....28666
178.....28666
179 .....28666, 33216, 33250
180.....33250
190.....27789
191.....27789
192 .....27789, 28770, 30824
193.....27789
225.....30940
541.....29031
565.....29031
567.....29031
571 .....28423, 29031, 29493, 30824
574.....29493
1002.....32355
1039.....29036
1150.....29973, 32355
1312.....30181

Proposed Rules:

6.....28831
7.....33075
10.....29522
171.....33250
172.....33250
173.....33250
178.....33250
192.....33475
214.....31085
223.....30672
229.....30672
232.....30672
234.....31802
238.....30672
391.....28547
571 .....28123, 28124, 28550, 28560, 29337, 30209, 30586, 30848, 31086
581.....30848
594.....32411

50 CFR

Ch. VI.....30543
13.....31850
14.....31850
17 .....31054, 32356, 33377
32.....31459, 31461
36.....29495
216.....27793
217.....33377
227.....33377
230.....29628
247.....27793
285.....30182, 30183
301.....29695, 29975
600.....32538
601.....32538
602.....32538
603.....32538
605.....32538
611.....32538
619.....32538
620.....27795, 32538
621.....32538
625.....32711, 33382
656.....29321
661.....31873
663.....28786, 28796
671.....31228
672 .....28069, 28070, 31228
673.....31228
675 .....27796, 28071, 28072, 29696, 30544, 31228, 31463
676.....31228
677.....31228
679 .....31228, 33045, 33382, 33386
697.....29321

Proposed Rules:

17 .....28834, 29047, 30209, 30588, 32416, 33080
20.....30114, 30490
32 .....31888, 31891, 31893, 31895, 31897, 31899, 31901, 31904, 31906, 31908, 32415
216.....30212
217.....30588
227.....30588
285.....30214
625.....27851
641.....29339, 32422
650.....27862
651 .....27862, 27948, 30029
652.....31499
669.....30589
675.....29726
676.....29729, 32767

REMINDERS

The items in this list were editorially compiled as an aid to Federal Register users. Inclusion or exclusion from this list has no legal significance.

RULES GOING INTO EFFECT TODAY

AGRICULTURE DEPARTMENT

Agricultural Marketing Service

Almonds grown in California; published 6-26-96

Spearmint oil produced in Far West; published 6-26-96

AGRICULTURE DEPARTMENT

Commodity Credit Corporation

Loan and purchase programs:

Price support levels--

Tobacco; published 6-27-96

AGRICULTURE DEPARTMENT

Rural Utilities Service

Rural development:

Distance learning and telemedicine grant program; published 6-27-96

COMMERCE DEPARTMENT

National Oceanic and Atmospheric Administration

Fishery conservation and management:

Foreign and domestic fishing--

Scientific research activity, exempted fishing, and exempted educational activities; published 5-28-96

ENVIRONMENTAL PROTECTION AGENCY

Toxic substances:

Testing requirements--

Mesityl oxide; withdrawn; published 6-27-96

FEDERAL COMMUNICATIONS COMMISSION

Common carrier services:

Operator service access and pay telephone compensation; published 5-28-96

Radio services, special:

Vessel traffic services (VTS) system frequencies; published 5-28-96

FEDERAL TRADE COMMISSION

Trade regulation rules:

Incandescent lamp (light bulb) industry; CFR part removed; Federal regulatory reform; published 6-27-96

JUSTICE DEPARTMENT

Immigration and Naturalization Service

Immigration:

Immigration petitions--

Priority dates for employment-based petitions; published 6-27-96

TRANSPORTATION DEPARTMENT

Federal Aviation Administration

Airworthiness directives:

Lockheed; published 6-12-96

New Piper Aircraft, Inc.; published 5-16-96

Textron Lycoming; published 6-7-96

Twin Commander Aircraft Corp.; published 6-6-96

TREASURY DEPARTMENT

Internal Revenue Service

Income taxes:

Consolidated return regulations--

Consolidated groups; net operating loss carryforwards and built-in losses and credits following ownership change; limitations; published 6-27-96

Losses and deductions; use limitations; published 6-27-96

Short taxable years and controlled groups; published 6-27-96

Procedure and administration:

Extensions of time for making certain elections; published 6-27-96

COMMENTS DUE NEXT WEEK

AGRICULTURE DEPARTMENT

Agricultural Marketing Service

Onions grown in--

Idaho and Oregon; comments due by 7-1-96; published 5-31-96

Papayas grown in Hawaii; comments due by 7-5-96; published 6-4-96

Potatoes (Irish) grown in--

Oregon and California; comments due by 7-1-96; published 5-31-96

Southeastern States; comments due by 7-1-96; published 5-31-96

AGRICULTURE DEPARTMENT

Animal and Plant Health Inspection Service

Exportation and importation of animals and animal products:

Ratites and hatching eggs of ratites from Canada; comments due by 7-3-96; published 6-3-96

AGRICULTURE DEPARTMENT

Food Safety and Inspection Service

Meat and poultry inspection:

Cooked beef products, uncured meat patties, and poultry products production; performance standards; comments due by 7-1-96; published 5-2-96

Establishment drawings and specifications, equipment, and partial quality control programs; prior approval requirements elimination; comments due by 7-1-96; published 5-2-96

COMMERCE DEPARTMENT

National Oceanic and Atmospheric Administration

Fishery conservation and management:

Gulf of Alaska and Bering Sea and Aleutian Islands groundfish; comments due by 7-1-96; published 5-16-96

Gulf of Mexico reef fish; comments due by 7-1-96; published 6-10-96

Northeast multispecies; comments due by 7-1-96; published 6-13-96

COMMODITY FUTURES TRADING COMMISSION

Commodity Exchange Act:

Voting by interested members of self-regulatory organization governing boards and committees; broker association membership disclosure; comments due by 7-2-96; published 5-3-96

DEFENSE DEPARTMENT

Acquisition regulations:

Defense articles; pricing for sales; comments due by 7-1-96; published 4-30-96

ENERGY DEPARTMENT

Acquisition regulations:

Federal regulatory review; comments due by 7-2-96; published 5-3-96

ENVIRONMENTAL PROTECTION AGENCY

Air quality implementation plans; approval and promulgation; various States:

Idaho; comments due by 7-1-96; published 5-30-96

Oregon; comments due by 7-5-96; published 6-5-96

Wisconsin; comments due by 7-5-96; published 6-5-96

Hazardous waste:

Identification and listing--

Exclusions; comments due by 7-5-96; published 5-20-96

Pesticides; tolerances in food, animal feeds, and raw agricultural commodities:

1,1-Difluoroethane; comments due by 7-5-96; published 6-4-96

3-Dichloroacetyl-5-(2-furanyl)-2,2-dimethyloxazolidine; comments due by 7-5-96; published 6-19-96

A-alkyl(C12-C15)-w-hydroxy poly(oxyethylene) sulfate, etc.; comments due by 7-5-96; published 6-4-96

Capsaicin and ammonium salts of fatty acids; comments due by 7-1-96; published 5-1-96

FEDERAL COMMUNICATIONS COMMISSION

Radio and television broadcasting:

Equal employment opportunity (EEO) requirements; streamlining; comments due by 7-1-96; published 5-20-96

Radio stations; table of assignments:

Kentucky; comments due by 7-1-96; published 5-14-96

FEDERAL EMERGENCY MANAGEMENT AGENCY

Flood insurance program:

Allocated loss adjustment expense fee schedule; comments due by 7-1-96; published 5-15-96

FEDERAL LABOR RELATIONS AUTHORITY

Federal Service Impasses Panel:

Miscellaneous amendments; comments due by 7-5-96; published 6-6-96

Miscellaneous and general requirements:

Documents filing and/or service by facsimile transmissions; comments due by 7-5-96; published 6-6-96

FEDERAL RESERVE SYSTEM

Securities credit transactions (Regulations G, T, and U);

comments due by 7-1-96; published 5-6-96

FEDERAL TRADE COMMISSION

Private vocational school guides; comments due by 7-1-96; published 5-3-96

GENERAL ACCOUNTING OFFICE

Bid protest process; timeliness requirement; comments due by 7-1-96; published 5-1-96

HEALTH AND HUMAN SERVICES DEPARTMENT

Food and Drug Administration

Food additives:

Adjuvants, production aids, and sanitizers--

Hydrogen peroxide, etc. (aqueous solution); comments due by 7-5-96; published 6-4-96

Food for human consumption:

Food labeling--

Uniform compliance date; comments due by 7-1-96; published 4-15-96

Mammography quality standards:

Alternative performance and outcome-based standards; comments due by 7-2-96; published 4-3-96

Mammography equipment; quality standards and assurance; comments due by 7-2-96; published 4-3-96

Mammography facilities; accreditation requirements; comments due by 7-2-96; published 4-3-96

Mammography facilities; quality standards and certification requirements--

General facility requirements; comments due by 7-2-96; published 4-3-96

Personnel requirements; comments due by 7-2-96; published 4-3-96

National Environmental Policy Act; implementation; Federal regulatory review; comments due by 7-2-96; published 4-3-96

HEALTH AND HUMAN SERVICES DEPARTMENT

Health Care Financing Administration

Medicare and medicaid:

Organ procurement organizations; conditions of coverage; comments due by 7-1-96; published 5-2-96

HOUSING AND URBAN DEVELOPMENT DEPARTMENT

Community facilities:

Opportunities for youth; Youthbuild program; administrative costs; comments due by 7-1-96; published 5-17-96

Low income housing:

Housing assistance payments (Section 8)--

Fair market rent schedules (1997 FY); comments due by 7-1-96; published 5-8-96

Mortgage and loan insurance programs:

Title 1 property improvement and manufactured home loan insurance programs; comments due by 7-1-96; published 5-2-96

Public and Indian Housing:

Public housing management assessment program; comments due by 7-5-96; published 5-6-96

INTERIOR DEPARTMENT

Indian Affairs Bureau

Fish and wildlife:

Indian fishing; Hoopa Valley Indian Reservation; CFR part removed; comments due by 7-1-96; published 5-2-96

INTERIOR DEPARTMENT

Land Management Bureau

Preservation and conservation; and health, safety, and enforcement; Federal regulatory review; comments due by 7-5-96; published 6-5-96

INTERIOR DEPARTMENT

Fish and Wildlife Service

Endangered and threatened species:

Mexican gray wolf; nonessential experimental population establishment in Arizona and New Mexico; comments due by 7-1-96; published 5-1-96

Migratory bird hunting:

Annual hunting regulations; and special youth waterfowl hunting day consideration; comments due by 7-5-96; published 6-14-96

JUSTICE DEPARTMENT

Drug Enforcement Administration

Federal regulatory review; comments due by 7-3-96; published 3-5-96

LABOR DEPARTMENT

Federal Contract Compliance Programs Office

Affirmative action obligations of contractors and subcontractors for disabled veterans and Vietnam era veterans:

Invitation to self-identify; comments due by 7-1-96; published 5-1-96

LABOR DEPARTMENT

Occupational Safety and Health Administration

Occupational injury and illness; recording and reporting requirements; comments due by 7-1-96; published 6-3-96

LABOR DEPARTMENT

Wage and Hour Division

McNamara-O'Hara Service Contract Act:

Federal service contracts; labor standards; minimum health and welfare benefits requirements; comments due by 7-1-96; published 5-2-96

LIBRARY OF CONGRESS

Copyright Office, Library of Congress

Cable compulsory license:

Open video systems of telephone companies; eligibility; comments due by 7-5-96; published 5-6-96

Open video systems of telephone companies; eligibility and comment period extended; comments due by 7-5-96; published 5-31-96

INTERIOR DEPARTMENT

National Indian Gaming Commission

Indian Gaming Regulatory Act:

Class III (casino) gaming on Indian lands; authorization procedures when States raise Eleventh amendment defense; comments due by 7-1-96; published 5-10-96

NUCLEAR REGULATORY COMMISSION

Environmental protection; domestic licensing and related regulatory functions:

Nuclear power plant operating licenses; environmental review for renewal; comments due by 7-5-96; published 6-5-96

SECURITIES AND EXCHANGE COMMISSION

Electronic media; use in delivery purposes; comments due by 7-1-96; published 5-15-96

TRANSPORTATION DEPARTMENT

Coast Guard

Drawbridge operations:

Louisiana; comments due by 7-1-96; published 5-1-96

Merchant marine officers and seamen:

Radar-observer endorsement for uninspected towing vessel operators; comments due by 7-2-96; published 5-3-96

TRANSPORTATION DEPARTMENT

Federal Aviation Administration

Airworthiness directives:

de Havilland; comments due by 7-1-96; published 5-21-96

Beech; comments due by 7-1-96; published 5-21-96

I.A.M. Rinaldo Piaggio S.p.A.; comments due by 7-5-96; published 4-29-96

Pratt & Whitney; comments due by 7-5-96; published 5-6-96

Pratt and Whitney; comments due by 7-5-96; published 5-6-96

Class E airspace; comments due by 7-1-96; published 5-20-96

TRANSPORTATION DEPARTMENT

National Highway Traffic Safety Administration

Motor vehicle safety standards:

Hydraulic brake systems--

Light vehicle brake systems; comments due by 7-1-96; published 5-2-96

TRANSPORTATION DEPARTMENT

Research and Special Programs Administration

Pipeline safety:

Program procedures, reporting requirements, gas pipeline standards, and liquefied natural gas facilities standards; Federal regulatory reform; comments due by 7-3-96; published 6-3-96

TREASURY DEPARTMENT

Fiscal Service

Marketable book-entry Treasury bills, notes, and bonds; sale and issue; uniform offering circular; amendments; comments due by 7-3-96; published 6-19-96

TREASURY DEPARTMENT

Internal Revenue Service

Income taxes and employment taxes and collection of income taxes at source:

Temporary employment; information reporting and backup withholding; hearing; comments due by 7-3-96; published 5-8-96